Vehicle Environmental Engineering
Ford Motor Company

1500 Enterprise Drive
Suite 3W-200
Allen Park, MI 48101

October 26, 2012

Mr. Chris Nevers
Certification Division
Office of Mobile Source Air Pollution Control
Environmental Protection Agency
2000 Traverwood
Ann Arbor, Michigan 48105

Dear Mr. Nevers

Subject: 2014 MY LDV and LDT Application for Certification: Common Section Initial Submission

This submittal contains the CBI and FOI versions of the Initial 2014 MY Common Section for your review and approval. This submittal follows the CAP 2000 Guidance – recommended Part-1 Application format, based on the Part-1 application requirements found in 40CFR86.1844-01(d).

Sections included:

	INDEX
01.00.00.00	Correspondence & Communication
03.00.00.00	Evaporative / Refueling Family Description
04.00.00.00	Description of Durability Method
09.00.00.00	OBD Description
12.00.00.00	Description of Vehicles Covered by Certificate & Test Parameters
14.00.00.00	Request for Certification
15.00.00.00	Other Information
16.00.00.00	Confidential Information
17.00.00.00	California ARB Information
18.00.00.00	Revisions

The subject document contains confidential information (Section 16) for which Ford requests confidential treatment. In the event you believe that all or part of that submitted information may not be entitled to confidential treatment, Ford asks that you provide reasonable notice of not less than ten working days prior to any contemplated disclosure. Please direct all notices to, Alan Prescott, (A.D.), Office of the General Counsel, Ford Motor Company, Room 437-A1, World Headquarters, One American Road, Dearborn, MI 48126-2798; telephone (313) 390-5621, E-mail; APRESCOT@ford.com

If you have any questions, with regard to this submittal, please contact Mr. Kenneth A. Jenifer at kjenifer@ford.com or (313) 317-2220.

Sincerely,

Todd M. Fagerman, Manager
Car & Truck Certification
Vehicle Environmental Engineering

Vehicle Environmental Engineering
Ford Motor Company

1500 Enterprise Drive
Suite 3W-200
Allen Park, MI 48101

October 26, 2012

Ms. Annette Hebert, Chief
Mobile Source Operations Division
Haagen-Smit Laboratory
P. O. Box 8001
9528 Telstar Avenue
El Monte, California 91734-8001

Dear Ms. Hebert

Subject: 2014 MY LDV and LDT Application for Certification: Common Section Initial Submission

This submittal contains the CBI and FOI versions of the Initial 2014 MY Common Section for your review and approval. This submittal follows the CAP 2000 Guidance – recommended Part-1 Application format, based on the Part-1 application requirements found in 40CFR86.1844-01(d).

Sections included:

	INDEX
01.00.00.00	Correspondence & Communication
03.00.00.00	Evaporative / Refueling Family Description
04.00.00.00	Description of Durability Method
09.00.00.00	OBD Description
12.00.00.00	Description of Vehicles Covered by Certificate & Test Parameters
14.00.00.00	Request for Certification
15.00.00.00	Other Information
16.00.00.00	Confidential Information
17.00.00.00	California ARB Information
18.00.00.00	Revisions

The subject document contains confidential information (Section 16) for which Ford requests confidential treatment. In the event you believe that all or part of that submitted information may not be entitled to confidential treatment, Ford asks that you provide reasonable notice of not less than ten working days prior to any contemplated disclosure. Please direct all notices to, Alan Prescott, (A.D.), Office of the General Counsel, Ford Motor Company, Room 437-A1, World Headquarters, One American Road, Dearborn, MI 48126-2798; telephone (313) 390-5621, E-mail; APRESCOT@ford.com

If you have any questions, with regard to this submittal, please contact Mr. Kenneth A. Jenifer at kjenifer@ford.com or (313) 317-2220.

Sincerely,

Todd M. Fagerman, Manager
Car & Truck Certification
Vehicle Environmental Engineering

2014 Common Section Index

INDEX

Section Number	Information
§ 01	CORRESPONDENCE & COMMUNICATION
01.01.00.00	Mailing Information
01.01.01.00	Cognizant Technical Representative
01.01.02.00	Certificate Information
01.02.00.00	Facsimile Information
01.03.00.00	Liaison Information
01.04.00.00	On-Site Certification Engineering Observers at EPA
§ 03	EVAPORATIVE / REFUELING FAMILY DESCRIPTION
03.01.00.00	ORVR System Description
03.02.00.00	Typical Evaporative Emission System
§ 04	DESCRIPTION OF DURABILITY METHOD
04.00.00.00	Alternate Durability Protocol
04.00.00.01	Equivalency Factors by Durability Group
§ 09	CORRESPONDENCE & COMMUNICATION
09.01.00.00	MIL/OBD Description for Gasoline Vehicles
09.01.00.01	MIL/OBD Description for Plug-in and Hybrid Electric Vehicles
09.01.00.02	MIL/OBD Description for 6.7L Diesel Engines
09.01.01.00	OBD Connector Location
09.01.02.00	OBD Group/Test Group Summary
§ 12	DESCRIPTION OF VEHICLES COVERED BY CERTIFICATE & TEST PARAMETERS
	Vehicle Road Load
12.01.01.00	Light Duty Vehicle RLD/CDT Summary
12.01.02.00	Light Duty Truck RLD/CDT Summary
12.01.03.00	Coastdown Calculation Summary
12.01.05.01	Roadload Determination Procedure
12.01.05.02	Dyno Procedure At Less Than Ambient Cell Temperature
12.01.06.00	Certification Coastdown Procedure for Determining Road Load Horsepower
	Fuel Tank Parameters
12.02.01.01	Fuel Tank Information
12.02.02.00	Fuel Tank Temperature Profiles
12.02.02.01	Wind Tunnel FTTP Procedure
	Transmission Information
12.03.00.00	Transmissions Identification Chart
12.03.01.00	Transmissions - Automatic
12.03.02.00	Transmissions - Manual
	Shifting Instruction
12.04.01.01	Shifting Instruction - Light Duty Trucks
12.04.01.02	Shifting Instruction - Cars

2014 Common Section Index

INDEX

	Special Testing Procedures
12.04.02.01	Sensorless FFV Modified C-Prep
12.04.02.02	ORVR Test Procedures for Ethanol Fuel-Flexible Vehicles (FFV)
12.04.02.04	Alternate Canister Load
12.04.02.05	SHED Calibration
12.04.02.06	Road-speed modulated fan for US06 testing
12.04.02.08	Special PCM Reflash Preconditioning Procedure
12.04.02.09	Additional Mileage Accumulation / Maintenance to Ensure Representativeness of EDVs
§ 14	**REQUEST FOR CERTIFICATION**
14.01.00.00	Request for Certificate / Executive Order and Common Application Statements
14.01.01.01	Statement of Compliance
14.01.01.02	Statement of Device Safety
14.01.01.03	Statement of Compliance for Unregulated Pollutants
14.01.01.05	Statement of Particulate Emissions
14.01.01.06	Statement of Compliance for Warranty
14.01.01.07	Statement of Low Leak Exhaust
14.01.01.08	Statement of Formaldehyde Emissions
14.01.01.09	Use of 1.04 NMOG/NMHC Ratio in Lieu of NMOG Testing
14.01.01.10	Certification Short Test (CST)
14.01.01.11	High Altitude Testing
14.01.01.12	91 RON (Knock Sensor)
14.01.01.13	Intermediate Temperature Defeat Device Avoidance
14.01.01.14	Fuel Spitback Emissions for ORVR Certified Vehicles
14.01.01.16	Air to Fuel Ratio Requirements
14.01.01.17	N2O Attestation
14.01.02.00	Unique CARB Requirements
14.01.02.00	California Fuel Fill Pipe Compliance
14.01.02.01	Environmental Performance Label Statement
14.01.02.02	California I/M Tests
§ 15	**OTHER INFORMATION**
15.01.00.00	Adjustable Parameters
15.01.01.00	Diesel Exhaust Fluid (DEF) Range Declaration
15.02.00.00	Heavy Duty Vehicle Speed Simulation Procedure
15.03.01.00	Fuel Recommendation
15.05.00.00	Crankcase Emission Control System
15.10.00.00	Service Manuals & Bulletins

2014 Common Section Index

INDEX

§ 16	CONFIDENTIAL INFORMATION
16.01.00.00	Statement of Business Confidentiality
16.02.01.00	Catalytic Converter Description
16.03.01.00	Typical Catalyst Converter System Installation Chart
16.04.00.00	Alternate Calibrations
16.05.00.00	AECD Description - Gasoline
16.05.00.02	AECD Description - Heavy Duty Gasoline
16.05.00.03	ELCM - HEV Evap Leak Check Monitor
16.05.01.01	AECD Description - Diesel
16.05.01.02	Diesel Selective Catalytic Reduction (SCR) System Operation Description
	OBD Representative Calibration Summary
16.06.02.00	OBD Strategies
16.06.02.01	FNF_FMF Strategy
16.06.02.02	BMC Strategy
16.06.02.03	GDF Strategy
16.06.02.04	KHC Strategy
16.06.02.05	KHD Strategy
16.06.02.06	HPG Strategy
16.06.02.07	TEZ Strategy
16.06.02.08	KPC Strategy
16.06.02.09	DDC (<10K) Strategy
16.06.02.10	DDC (>14K) Strategy
16.06.02.11	BXM Strategy
16.06.02.12	KGC Strategy
16.10.00.00	Durability Procedure Description
16.11.01.00	Compliance Phase-In Plan
16.11.01.01	Projected HDE GHG AB&T
16.11.02.00	Federal and Green States Phase-in Summary
16.11.03.00	CAP 2000 Test Groups
16.12.00.00	Ethanol FFV Test Fuels
16.12.01.00	Diesel Test Fuels
	Evaporative Emissions DF Procedures
16.13.00.00	Evaporative and ORVR DF Calculations
16.13.01.01	R/L, H/S, Diurnal & ORVR DF Procedure
16.13.01.02	Evap/ORVR DF FUL Bench Aging Procedures
16.13.01.03	Evap/ORVR DF Mileage Procedures
16.13.01.04	Evap/ORVR DF 4K Bench Aging Procedures
16.13.02.00	Approved Materials
16.13.03.00	Evaporative / ORVR Family Descriptions
	Other Confidential DF Procedures
16.18.00.00	Heavy Duty Engine Service Accumulation Procedures
§ 17	**California Air Resources Board**
17.01.00.00	California ARB Fill Pipe Specifications
§ 18	**REVISIONS**
18.00.00.00	Revisions

01.00.00.00 CORRESPONDENCE and COMMUNICATIONS

01.01.00.00 Mailing Information

01.01.01.00 Cognizant Technical Representative

Listed below are the name, address and telephone number of Robert D. Brown, the Ford Motor Company cognizant technical representative. Also listed is contact information for Todd M. Fagerman and Peter D. Souchock. At the time of publication, please provide guidance documents and other technical information to those individuals. Non-OBD information exchanges related to emissions certification (e.g., Executive Orders and/or Certificates of Conformity) should be directed to Todd M. Fagerman. Information exchanges related to OBD should be addressed to Peter D. Souchock.

Robert D. Brown, Vice President
Sustainability, Environmental and Safety Engineering
Ford Motor Company
World Headquarters
One American Road
Dearborn, Michigan 48126-2798

Telephone: (313) 248-2137
E-mail: rbrown8@ford.com

Robert T. Holycross, Director
Global Certification and Program Compliance
Suite 3W-200, Allen Park Test Laboratory
1500 Enterprise Drive
Allen Park, MI 48101

Telephone: (313) 8458247
E-mail: rholycro@ford.com

Todd M. Fagerman, Manager
Vehicle Environmental Engineering
Car & Truck Certification
Suite 3W-200, Allen Park Test Laboratory
1500 Enterprise Drive
Allen Park, MI 48101

Telephone: (313) 594-0680
E-mail: tfagerma@ford.com

Peter D. Souchock, Manager
Vehicle Environmental Engineering
Compliance & Fuel Economy Engineering
Suite 3W-100, Allen Park Test Laboratory
1500 Enterprise Drive
Allen Park, MI 48101

Telephone: (313) 322-6887
E-mail: psouchoc@ford.com

01.01.02.00 Certificate Information

The corporate name and address that should be printed on the Certificate of Conformity or Executive Order is:

Ford Motor Company
The American Road
Dearborn, Michigan 48121-1899

01.02.00.00 Facsimile Information

The following telecopier telephone numbers are available for the transmittal of printed or written material to the Ford Motor Company Vehicle Environmental Engineering Office:

(313) 337-5935 Car and Truck Certification

01.03.00.00 Liaison Information

Persons Authorized to Communicate with EPA or ARB staff:

Name	Responsibility	Telephone No.	E-mail Address
Robert D. Brown	Vice President	(313) 248-2137	rbrown8@ford.com
Robert T. Holycross	Global Certification and Program Compliance Director	(313) 845-8247	rholycro@ford.com
Todd M. Fagerman	Car & Truck Certification Manager	(313) 594-0680	tfagerma@ford.com
Peter D. Souchock	Compliance & Fuel Economy Manager	(313) 322-6887	psouchoc@ford.com
Michael J. Fuher	Fuel Economy, Vehicle Coastdown & Test Technology Specialty Manager	(313) 323-0403	mfuher@ford.com
Jeff S. Garber	Laboratory Correlation & Compliance Database Specialty Manager	(313)594-7815	jgarber@ford.com
Ed C. Kulik	Chassis Certification Specialty Manager	(313) 845-3155	ekulik@ford.com
Beth Spencer	Vehicle Environmental Reporting / Compliance Specialty Manager	(313) 337-2635	bspencer@ford.com
John T. Trajnowski	OBD & Regulatory Compliance Specialty Manager	(313) 322-5670	jtrajnow@ford.com
Neil G. Whitbeck	Diesel, HD Engine & Advanced Cert Specialty Manager	(313) 323-1670	nwhitbec@ford.com
Camil Banciu	Database Control / System Integration Supervisor	(313) 390-8623	cbanciu@ford.com
Jacob J. Cusumano	Fuel Economy Programs Supervisor	(313) 248-8521	jcusuman@ford.com
Darryl A. Forintos	Car & Truck Certification Timing / Planning Supervisor	(313) 805-3615	dforinto@ford.com
Mark T. Guenther	Coastdown & Test Technology Supervisor	(313) 594-2054	mguenthe@ford.com
Michael P. Landry	Car / LDT1 Applications & Durability Programs Supervisor	(313) 322-9510	mlandry@ford.com
Kenneth C. Middleton	Evaporative and Advanced Certification Supervisor	(313) 805-8233	kmiddle1@ford.com

01.03.00.00 Liaison Information (Continued)

Persons Authorized to Communicate with EPA or ARB staff:

Name	Responsibility	Telephone No:	Email Address
Ken J. McAlinden	OBD Certification, HD Trucks, Noise / RFI / IM Supervisor	(313) 322-4018	kmcalind@ford.com
Rebecca H. Shelby	IUVP / OBD PVE Compliance Testing Supervisor	(313) 248-8010	rking25@ford.com
Mike T. Sherman	Correlation, Compliance & Analysis Supervisor	(313) 594-2056	msherma1@ford.com
Robert E. Stoll	VECI & Diagnostic Laboratory Supervisor	(313) 248-8620	rstoll@ford.com
Todd J. Crompton	AECD Compliance Specialist	(313) 805-3612	tcrompto@ford.com

Certification / Fuel Economy Engineers

Name	Responsibility	Telephone No:	Email Address
Paul D. Beretz	Fuel Economy CAFÉ Liaison	(313) 317-2206	pberetz@ford.com
Travis J. Henney	Diesel Liaison	(313) 399-7256	thenney@ford.com
Steve M. Howard	Light Duty Vehicle Liaison	(313) 248-9666	showard1@ford.com
Kenneth A. Jenifer	Light Duty Truck Liaison	(313) 317-2220	kjenifer@ford.com
Leonard J. Kaminski	Light Duty Vehicle / Exhaust Durability Programs Liaison	(313) 805-5457	lkaminsk@ford.com
Scott Kiyabu	Light Duty Truck Liaison	(313) 390-2782	skiyabu@ford.com
Elisa K. LaRue	Fuel Economy Labeling Liaison	(313) 322-3707	elarue1@ford.com
Chris Lounds	Light Duty Vehicle Liaison	(313) 322-9760	clounds@ford.com
Chijioke A. Okafor	Heavy Duty Gas Engine Liaison	(313) 594-7657	cokafor@ford.com
Vincent A. Redmond	Light Duty Vehicle Liaison	(313) 337-5144	vredmond@ford.com
Alan C. Sadler	Light Duty Truck Liaison	(313) 323-0838	asadler@ford.com
Toni M. Shay	Fuel Economy Labeling Liaison	(313) 317-2219	tshay2@ford.com
Harold V. Woods	Light Duty Truck Liaison	(313) 248-9938	hwoods@ford.com
Ruowen Wu	Light Duty Vehicle Liaison	(313) 390-7247	rwu5@ford.com

01.03.00.00 Liaison Information (Continued)

Personnel Authorized to Communicate with EPA / ARB Staff in Regard to Advanced Certification, OBD and Program Timing Issues:

Name	Responsibility	Telephone No.	E-mail Address
Reid P. Cuddy	Exhaust Durability Programs Liaison	(313) 805-3619	rcuddy@ford.com
Marisa A. Faith	Program Management	(313) 323-8046	mander51@ford.com
Michael J. Gabbert	OBD Liaison	(313) 323-7122	mgabbert@ford.com
Mark M. Kobetis	FTTP Road Testing , Car / Truck Shift Schedules, and Compliance Plan Liaison	(313) 805-8216	mkobetis@ford.com
Greg D. Martin	OBD Liaison	(313) 805-4972	gmarti86@ford.com
Erin A. Walkowicz	Evaporative Programs, FTTP Wind Tunnel Testing and ORVR Safety Liaison	(313) 805-6656	ewalkow2@ford.com

Personnel Authorized to Communicate with EPA / ARB Staff in Regard to Test Procedures:

Name	Responsibility	Telephone No.	E-mail Address
Mark T. Guenther	Coastdown & Test Technology Supervisor	(313) 594-2054	mguenthe@ford.com
Michael T. Sherman,	Correlation, Compliance & Analysis Supervisor	(313) 594-2056	msherma1@ford.com

Personnel Authorized to Communicate with EPA / ARB Staff in Regard to In-Use Compliance:

Name	Responsibility	Telephone No.	E-mail Address
Rebecca H. Shelby	IUVP, OBD PVE Compliance Testing Supervisor	(313) 248-8010	rking25@ford.com

01.04.00.00 On Site Certification Engineering Observer at EPA

To ensure that Ford Motor Company certification vehicles are processed through the EPA Laboratory in a manner consistent with established test schedules and procedures, a Certification Engineering representative has been assigned from the Certification Engineering Department. Additional Ford Motor Company personnel, not otherwise specified in this Application, may be on site to provide assistance to the vehicle Certification Engineering representative in the performance of his duties.

Authorized Certification Engineering Observers:

Name	Telephone No.	E-mail Address
John P. Dabbs	(313) 594-1489	jdabbs1@ford.com
Dave J. Szajner	(313) 594-7954	dszajner@ford.com

ORVR Fuel System Components: Figure 1 illustrates a generic Ford ORVR-equipped fuel system. The generic ORVR-equipped fuel system utilizes the following hardware:

- Specially Designed Filler Pipe - Ensures the formation of a dynamic liquid seal during vehicle refueling. The pipe may also come equipped with a vapor recirculation line to minimize vapor growth during refueling.

- Specially Designed Fill Control Valve - Limits fuel levels in the fuel tank and allows refueling vapors to travel through the valve into the vapor line. Some fill control valves act to separate entrained liquid fuel from fuel vapors passing through the valve.

- Vapor Recirculation Line - Routes a portion of refueling vapors to the top of the fuel filler pipe to limit amount of relatively fresh air being entrained by action of liquid seal. A fixed or variable size orifice controls the flow of recirculated vapors.

- Anti-spitback Device - Located in line with the fuel filler pipe, this device (usually a flapper door valve or fill tube check valve with a piston/spring/valve seat design) impedes spitback of liquid at the end of the refueling event.

- Carbon Canister - Used to store refueling vapors for use later in engine operation. Ford uses an integrated system to capture both evaporative and refueling emissions on all programs except plug-in hybrids. On plug-in hybrids, Ford utilizes a non-integrated system which utilizes the canister for refueling emissions and a pressurized fuel tank for evaporative emissions.

- Carbon Canister Vent Valve – Systems are equipped with a solenoid that is normally open to allow fresh air to enter and exit the canisters as required by system performance. This valve closes to seal the system for the diagnostic system leak check. Hybrid programs utilize an Electronic Leak Check Module (ELCM) to conduct leak detection by monitoring flow through an orifice.

All fuel system designs, including those equipped to control refueling emissions, contain safety features required to ensure compliance with rollover and crash safety requirements.

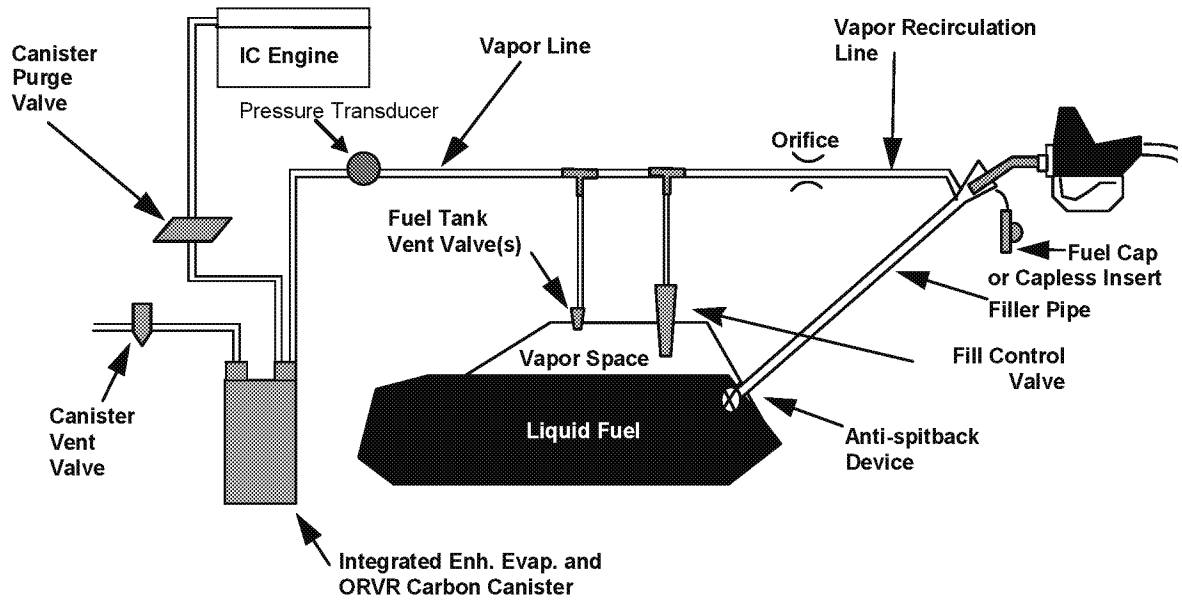

Figure 1. Generic ORVR-Equipped Ford Fuel System

Operation of ORVR System During Refueling: During refueling, the ORVR fuel system routes the majority of refueling vapors to a carbon canister, where they are adsorbed and stored for later use. A recirculation line guides a small portion of refueling vapors to the top of the fuel neck to displace relatively fresh air which otherwise would be drawn into the fuel tank by the action of the fuel flowing through the filler pipe. A fixed or variable diameter orifice located in the recirculation line restricts the quantity of fuel vapors being recirculated to ensure no vapors spill out the fuel filler inlet into the atmosphere.

Other vapor routes are blocked during vehicle refueling. A closed vapor management valve blocks vapors from traveling to the engine. A dynamic liquid seal constitutes the primary mechanism for blocking refueling vapors from escaping out the fuel filler pipe. The shape of the fuel filler pipe rapidly constricts shortly after the site of maximum fuel nozzle penetration. This constriction causes the fuel to flow in a manner such that no fuel vapors can escape to the atmosphere from the fuel tank through the fuel filler neck. Instead, the action of the incoming fuel draws fresh air (and recirculated vapor, where applicable) into the filler neck. Once refueling stops and the liquid seal is broken, an anti-spitback device -- such as a fill tube check valve -- acts to restrict fuel spitback and wellback.

Refueling shut off occurs due to a float rising in the fuel limiting vent valve. As the float rises, the valve closes the vapor pathway to the vapor lines. Pressure in the fuel tank builds, in turn, producing a pressure pulse that travels up the fuel filler neck. The pressure pulse in the filler neck causes liquid fuel to cover the shut-off port on the fuel-dispensing nozzle, thereby causing the nozzle to shut off.

Fuel Filler Inlet Design: Ford fuel filler inlets conform to California fuel filler inlet requirements, which in their geometric specifications are almost identical to ISO 9158 and SAE J285. Ford fuel inlets also employ a fuel nozzle restrictor conforming to the requirements of 40 CFR §80.24. Ford has elected to discontinue the use of a metallic flapper valve on the fuel filler inlet restriction. The restriction hole of the newly designed nozzle inlet plate in the fuel pipe is strategically sized and located such that when the fuel nozzle is introduced in the fuel pipe to dispense fuel, it helps ensure the fuel nozzle contacts the fill pipe plate for grounding, bonding.

TYPICAL EVAPORATIVE EMISSION SYSTEM

DESCRIPTION OF EVAPORATIVE EMISSION CONTROL SYSTEM

The Evaporative Emission Control System consists of a sealed fuel tank assembly, a filler pipe, a fuel cap or capless insert, fuel tank vapor orifice(s) (fuel limiting vent valves and grade vent valves), materials that adsorb fuel vapors (such as carbon in a canister), and a canister purge valve.

DESCRIPTION OF CANISTER PURGE

The carbon canister is purged of fuel vapor during normal vehicle driving. The flow of fuel vapor to the engine is controlled by the canister purge valve. The canister purge valve is electronically actuated by the Powertrain Control Module (PCM).

EVAPORATIVE EMISSION COMPONENTS

TYPICAL CANISTER PURGE VALVE

The typical canister purge valve is used to control the purge of stored fuel vapor inside the carbon canister assembly. The canister purge valve is electronically controlled by the Powertrain Control Module (PCM). The canister purge valve is a normally closed valve. When the PCM actuates the canister purge valve, the engine vacuum is applied to the carbon canister(s), and the desorbed fuel vapor is drawn through the canister purge valve and into the engine for consumption.

TYPICAL CARBON CANISTER

The carbon canister contains activated carbon for the storage of fuel vapor. The carbon canister is purged of the stored fuel vapor by the operation of the canister purge valve.

Some vehicles may include an engine buffer canister, which also contains activated carbon for the storage of fuel vapor. The engine buffer canister is commonly located in series with the canister purge valve or integrated into the primary canister. The function of the engine buffer canister is not to control evaporative emissions; rather, it buffers the engine from high concentrations of fuel vapor during vehicle operation in order to prevent undesired air/fuel ratio fluctuations. As such, engine buffer canisters need not be loaded with butane/nitrogen mixtures prior to exhaust or evaporative emissions testing.

TYPICAL VAPOR BLOCKING VALVE (NON PLUG-IN HYBRID)

The typical vapor blocking valve (VBV) is used to control the purge of stored fuel vapor inside the fuel tank assembly. The VBV is electronically controlled by the Powertrain Control Module (PCM). The fuel tank isolation valve is a normally open valve. When the PCM actuates the VBV, the valve closes and the application of engine vacuum to the fuel tank's vapor dome is prevented.

TYPICAL FUEL TANK ISOLATION VALVE (PLUG-IN HYBRID ONLY)

The typical fuel tank isolation valve is used to close the NIRCOS (Non-Integrated Refueling Canister Only System) pressurized fuel tank in order to contain evaporative emissions. The FTIV is electronically controlled by the Powertrain Control Module (PCM). The fuel tank isolation valve is a normally closed valve. When the PCM actuates the FTIV, the valve opens in order to vent the fuel tank through the carbon canister to enable refueling.

TYPICAL AIR INDUCTION SYSTEM (AIS) HYDROCARBON (HC) ADSORBER

Some vehicles may include an HC adsorber located in the engine AIS to capture fuel vapor from the intake manifold or crankcase after engine shutdown. The adsorber may contain activated carbon or other adsorptive material. This component is continuously purged during engine operation. In compliance with CARB's MAC 2001-03, and since the CFR only requires preconditioning of evaporative emission canisters, AIS HC adsorbers need not be preconditioned prior to testing.

TYPICAL FUEL LIMITING VENT VALVE (FLVV)

The FLVV is a three piece assembly consisting of the vent tube, vapor seal (which has an o-ring on both ends for leak protection), and the "check valve" which consists of a float with a spring assembly. The fuel limiting vent valve assembly provides two functions: (1) Limits fuel tank fill volume to the required refill volume, (2) roll-over protect the vent tube path for crash. The valve during normal vehicle driving is in an upright position.

During a roll-over condition, the FLVV spring closes the float to the vent tube to prevent liquid fuel from entering the vent.

TYPICAL GRADE VENT VALVE (GVV)

The grade vent valves (GVV) are typically mounted on the front and the rear top of the fuel tank. They are designed to prevent liquid from the fuel tank from entering the vapor stream, while allowing the fuel vapor to move through the evaporative emission control system.

The spring and float within each valve shuts off the vapor stream whenever liquid gasoline reaches the inlet port. The GVV reopens when the attitude of the fuel tank returns to horizontal and the liquid fuel drains from the area of the GVV. In the vertical position the open bottom float will lift and close. In the rolled over position the spring will push the float closed whenever

the roll over angle permits liquid gasoline to reach the float. In the upside down position the weight of the float and the spring force will close the vapor path.

TYPICAL FILLER PIPE

The filler pipe assembly transfers liquid fuel from the fuel nozzle to the tank and has a "liquid seal" design. On some ORVR vehicles, a recirculation line connects from the main vapor line and supplies vapor from the tank to the top of the filler pipe to minimize the amount of fresh air that is drawn into the pipe.

At the top of the filler pipe, a fuel cap is installed, which seals the fuel tank assembly. The fuel cap includes a vacuum relief valve. On some vehicles, Ford utilizes a capless refueling system which seals the fuel tank without use of a fuel cap. Like the fuel cap, the capless refueling system includes vacuum relief capability.

ALTERNATE DURABILITY PROTOCOL

I Applicability

The following description is applicable to 2014 and subsequent model year passenger cars and trucks.

II REPORTING EQUIVALENCY FACTORS

For 2014 durability groups that carryover from previous model year durability programs that used the Ford High Speed Cycle (HSC or FAMA – Fast Approved Mileage Accumulation) equivalency factors are reported on a durability group basis.

Please see section 04.00.00.01 for equivalency factors.

III CALCULATION OF THE EQUIVALENCY FACTOR

Equivalency Factors are calculated according to 40 CFR § 86.1823-08 by collecting catalyst temperatures on both Ford's High Speed Cycle (HSC or FAMA – Fast Approved Mileage Accumulation) and the Ford modified length version (to fit Ford service track) of the EPA SRC cycle as allowed by Appendix V-(2.) of Part 86. Please see Figures 1 & 2, below. Ford uses a 5-mile track for service accumulation; accordingly the lap references in the SRC description below use the 5-mile lap. Alternatively, catalyst temperature cycles for equivalency factor determination may be collected on a chassis dynamometer.

For new, non-carryover, 2010 durability groups that use the EPA SRC cycle for durability, equivalency factors are not applicable and are not calculated. The EPA SRC cycle used for durability was modified the length of the lap segment of the SRC to be 2.5 miles, such that it is able to be run on our 5 mile track. Therefore, two lap segments of the SRC are completed each for 5 mile circuit of Ford's track.

Equivalency factors are calculated using the following steps:

Step 1: Record the temperature histogram on the customized/alternative Road Cycle.

Step 2: Calculate the bench aging time for the bench aging cycle using EPA's BAT calculator (40 CFR § 86.1823-08(d)(3)) and the customized/alternative road cycle (FAMA) temperature histogram.

Step 3: Record the temperature histogram on EPA's SRC.

Step 4: Calculate the bench aging time for the bench aging cycle using EPA's BAT calculator (40 CFR § 86.1823-08(d)(3)) and the SRC temperature histogram.

Step 5: Calculate the <u>equivalency factor</u> which equates the customized/alternative road cycle bench aging time divided by the SRC bench aging time – The following presents that calculation.

Equivalency Factor (EF) = Alternative road cycle aging time/SRC aging time

It is the intention of bench aging process to replicate road based catalyst deterioration experienced on the FAMA cycle by emissions matching and catalyst midbed time-at-temperature data obtained from catalysts and oxygen sensors. Aging cycle targets from accelerated fleet data are determined by calculating the hours necessary to achieve deterioration that reproduces full (or intermediate) useful life fleet average HC and NOx emissions for any engine/catalyst/HEGO system. Other considerations include catalyst inefficiency changes and fleet average deterioration rates (DFs).

One can replicate the Ford durability process by running the publicly available Ford FAMA drive cycle over the full useful life of a vehicle.

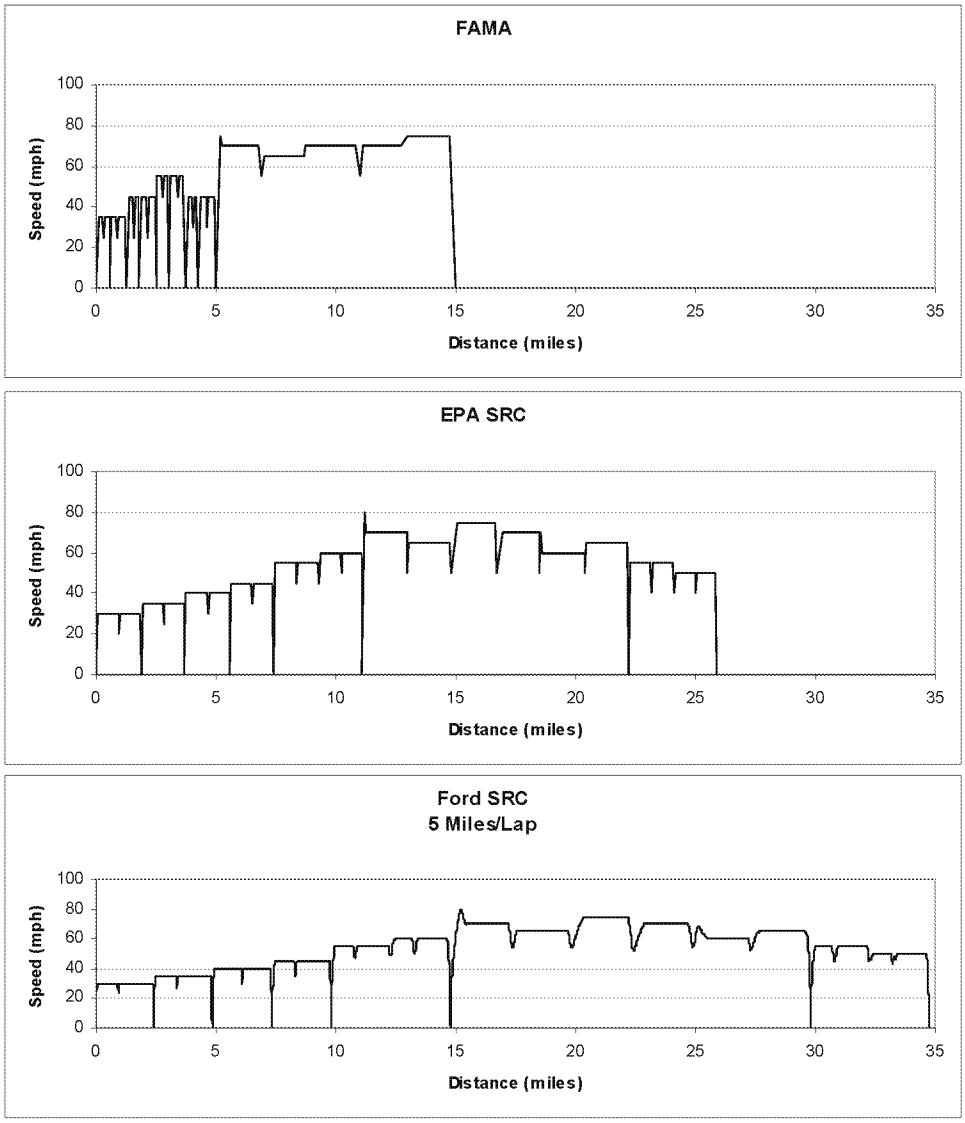

Figure 1 - Speed/Distance Comparison of Drive Cycles

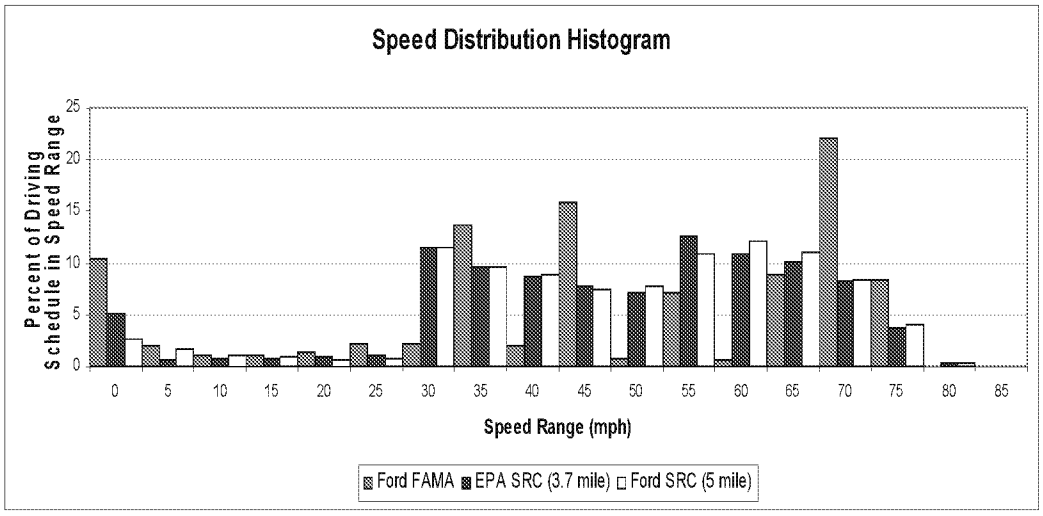

Figure 2 - Speed Histograms of Drive Cycles

CAP 2000 DURABILITY GROUPING DIVISIONS -- 2014 Model Year				Equivalency
Test Group		Program	Standard	Factor*
PD-RH -- DURABILITY GROUPS				
PD-RH -- DURABILITY GROUP 1 (4.0 - 3.0)				
DURABILITY GROUP DFMXGPGNND1A				1.0
DFMXV02.5VZX	2.5L	Fusion PZEV	T2B3(SULEV2)	
DURABILITY GROUP DFMXGPGNND1B				1.0
EFMXJ03.7VHJ	3.7L	MKT Limo/Hearse	T2B8(LEV2)	
PD-RH -- DURABILITY GROUP 2 (2.9 - 2.2)				
DURABILITY GROUP EFMXGPGNND2A				1.0
EFMXV02.0VZ2	2.0	Focus	T2B3(SULEV2)	
PD-RH -- DURABILITY GROUP 4 (1.5 - 1.1)				
DURABILITY GROUP EFMXGPGNND4C				1.0
EFMXV05.8VE2	5.8L	Mustang Shelby	T2B5(LEV2)	
DURABILITY GROUP EFMXGPGNND4D				1.7
EFMXT02.01DW	2.0	Transit Connect	T2B4(ULEV2q)	
PD-RH -- DURABILITY GROUP 5 (1.0 - 0.8)				
DURABILITY GROUP EFMXGPGNND5A				2.3
EFMXT06.24D2	6.2L	F-150 SVT Raptor/Harley	T2B4(ULEV2q)	
DURABILITY GROUP EFMXGPGNND5B				1.0
EFMXV05.0VD5	5.0L	Mustang	T2B4(ULEV2q)	
		ADP Vehicle	T2B4(LEV2)	
DURABILITY GROUP EFMXGPGNND5C				1.0
EFMXV03.7VDT	3.7L	Mustang	T2B4(ULEV2q)	
DURABILITY GROUP EFMXGPGNND5D				1.0
EFMXV02.5VEX	2.5L	Fusion	T2B5(ULEV2)	
DURABILITY GROUP EFMXGPGNND5E				1.0
EFMXT02.52ET	2.5L	Escape	T2B5(ULEV2)	
DURABILITY GROUP EFMXGPGNND5G				2.5
EFMXT06.85HT	6.8L	Econoline	T2B8(ULEV2q)	
PD-RH -- DURABILITY GROUP 6 (0.7 - 0.5)				
DURABILITY GROUP EFMXGPGNND6A				1.0
EFMXT03.72EE	3.7L	Edge/MKX	T2B5(ULEV2)	
PD-RH -- DURABILITY GROUP 7 (3.4 - 1.9) Direct Injection				
DURABILITY GROUP EFMXGPGNND7A				1.0
EFMXV01.5VZ1	1.5	Fusion GTDI pzev	T2B3(SULEV2)	1.0
		ADP Vehicle	T2B3(SULEV2)	
DURABILITY GROUP EFMXGPGNND7B				1.0
EFMXV01.6VDD	1.6	Fiesta 1.6L ST GTDi	T2B4 / ULEV2q	1.0
PD-RH -- DURABILITY GROUP 8 (1.7 - 1.3) Direct Injection				
DURABILITY GROUP EFMXGPGNND8A				1.0
EFMXV02.0VE7	2.0L	Taurus/MKT Livery GTDI	T2B5(ULEV2)	
EFMXV02.0VE7	2.0L	Taurus/MKT Livery GTDI	T2B5(ULEV2)	
DURABILITY GROUP EFMXGPGNND8B				1.0
EFMXT02.02EC	2.0L	Explorer/Edge/MKX GTDI	T2B5(ULEV2)	
DURABILITY GROUP EFMXGPGNND8D				1.0
EFMXT02.02EM	2.0L	Escape GTDI	T2B5(ULEV2)	
EFMXT02.02EM	2.0L	Escape GTDI	T2B5(ULEV2)	
EFMXV02.0VEM	2.0L	Fusion/MKZ GTDI	T2B5(ULEV2)	
EFMXV02.0VEM	2.0L	Fusion/MKZ GTDI	T2B5(ULEV2)	
		ADP Vehicle	T2B5(ULEV2)	
DURABILITY GROUP EFMXGPGNND8E				1.0
EFMXT02.02E1	2.0L	Escape GTDI	T2B5(ULEV2)	
DURABILITY GROUP EFMXGPGNND8F				1.0
EFMXT03.53E2	3.5L	Explorer/Police Interceptor Utility GTDI	T2B5(ULEV2)	
DURABILITY GROUP EFMXGPGNND8G				1.0
EFMXV03.5VEP	3.5	Taurus/MKS/Flex/MKT	T2B5(ULEV2)	

CAP 2000 DURABILITY GROUPING DIVISIONS -- 2014 Model Year				Equivalency
Test Group		**Program**	**Standard**	**Factor***
DURABILITY GROUP EFMXGPGNND8H				1.0
EFMXT01.62E9	1.6L	Escape T2B5 GTDI	T2B5(ULEV2)	
EFMXV01.6VDF	1.6L	Fusion GTDI	T2B4(ULEV2q)	
		ADP Vehicle	T2B4(ULEV2q)	
DURABILITY GROUP EFMXGPGNND8I				1.0
EFMXV01.6VDC	1.6L	Fiestia	T2B4/ULEV2q	
DURABILITY GROUP EFMXGPGNND8J				1.0
EFMXT02.02EX	2.0L	Explorer/Edge/MKX GTDI	T2B5(ULEV2)	
EFMXT02.02EX	2.0L	Explorer/Edge/MKX GTDI	T2B5(ULEV2)	
		ADP Vehicle	T2B5(ULEV2)	
DURABILITY GROUP EFMXGPGNND8K				1.0
EFMXT01.5VDG	1.5L	Fusion GDTi (TiVCT)	T2B5(LEV2)CB3	1
PD-RH -- DURABILITY GROUP 9 (1.2 - 0.9) Direct Injection				
DURABILITY GROUP EFMXGPGNND9A				1.0
EFMXV02.0VER	2.0	Focus ST GTDI	T2B4(ULEV2q)	
DURABILITY GROUP EFMXGPGNND9B				
EFMXT03.54DX	3.5L	F150	T2B4(ULEV2q)	1.0
FFV PD-RH -- DURABILITY GROUPS				
FFV PD-RH -- DURABILITY GROUP 1 (2.0-1.5)				
DURABILITY GROUP EFMXGPGEND1A				2.0
EFMXT05.44BC	5.4L 3V	Expedition/Navigator FFV	T2B4(ULEV2q)	
EFMXT05.45BR	5.4L 3V	Expedition/Navigator LIMO FFV	T2B8(ULEV2q)	
		ADP Vehicle	T2B8(ULEV2q)	
FFV PD-RH -- DURABILITY GROUP 2 (1.4-1.0)				
DURABILITY GROUP EFMXGPGEND2A				1.0
DURABILITY GROUP EFMXGPGEND2B				2.3
EFMXT04.65H9	4.6L 2V	Econoline FFV	T2B8(ULEV2q)	
DURABILITY GROUP EFMXGPGEND2C				2.3
EFMXT05.45HK	5.4L 2V	Econoline FFV	T2B8(ULEV2q)	
EFMXT05.45HL	5.4L 2V	Econoline Ambulance	T2B8(ULEV2q)	
		ADP Vehicle	T2B8(ULEV2q)	
DURABILITY GROUP EFMXGPGEND2E				1.0
CFMXT05.03D7	5.0L	F150 FFV	T2B4(ULEV2q)	
FFV PD-RH -- DURABILITY GROUP 3 (0.9-0.7)				
DURABILITY GROUP EFMXGPGEND3A				1.0
EFMXT06.27HL	6.2L	F-Series Super Duty FFV	T2B8(ULEV2q)	
FFV PD-RH -- DURABILITY GROUP 4 (0.6-0.4)				
DURABILITY GROUP EFMXGPGEND4A				2.3
EFMXT05.44HY	5.4L 3V	Expedition/Navigator FFV	T2B8	
DURABILITY GROUP EFMXGPGEND4B				1.0
EFMXV03.7VE8	3.7L	MKS/MKZ/MKT Livery	T2B5(ULEV2)	
EFMXT03.53E8	3.5L	Explorer	T2B5(ULEV2)	
EFMXV03.7VEA	3.7L	Tarus/Police Interceptor Sedan FFV	T2B5(ULEV2)	
EFMXT03.73DM	3.7L	Explorer/Police Interceptor Utility FFV	T2B5(ULEV2)	
		ADP Vehicle	T2B5(ULEV2)	
DURABILITY GROUP EFMXGPGEND4C				1.0
EFMXV02.0VD2	2.0	Focus FFV	T2B4(ULEV2q)	
DURABILITY GROUP DFMXGPGEND4D				1.0
DFMXV02.0VE3	2.0	Focus FFV	T2B5(ULEV)	
HEV PD-RH -- DURABILITY GROUPS				
HEV PD-RH -- DURABILITY GROUP 1 (4.8-3.6)				
DURABILITY GROUP EFMXHHGNND1A				1.0
EFMXV02.0VZL	2.0L	Fusion/C-Max FHEV	T2B3(ULEV2q)	

CAP 2000 DURABILITY GROUPING DIVISIONS -- 2014 Model Year				Equivalency
Test Group		**Program**	**Standard**	**Factor***
EFMXV02.0VZS	2.0L	Fusion/C-Max FHEV	T2B3(SULEV2)	
DURABILITY GROUP EFMXHHGNND1B				1.0
EFMXV02.0VZP	2.0L	Fusion/C-Max PHEV	T2B3(SULEV2)	

DIESEL PT-PD -- DURABILITY GROUPS

DIESEL PT-PD – DURABILITY GROUP 1 (3.0-2.3)

DURABILITY GROUP EFMXDPDNNF1A				1.0
EFMXD06.771C	6.7L	F-Series Super Duty >10K Diesel	chHDDsFIN-(0.4)/ULEV2	
		DF Vehicle	chHDDsFIN-(0.4)/ULEV2	
DURABILITY GROUP EFMXDPDNNF1B				1.0
EFMXD06.761A	6.7L	F-Series Super Duty <10K Diesel	chHDDsFIN-(0.2)/ULEV2	
		DF Vehicle	chHDDsFIN-(0.2)/ULEV2	

ELECTRIC VEHICLE -- DURABILITY GROUPS

Electric NA – DURABILITY GROUP 1

DURABILITY GROUP EFMXEEVNN?1A				1.0
EFMXV00.0VAE	TBD KW	Focus - BEV	T2B1(ZEV)	

* **Equivalency Factor values calculated in accordance with 40 CFR 1823-08 as ammended in the 11/09/2009 Direct Final Rule.**

2014 MY OBD System Operation

Summary for Gasoline Engines

Table of Contents

Introduction – OBD-I, OBD-II, HD OBD and EMD....4

Catalyst Efficiency Monitor....6

Misfire Monitor....16

EVAP System Monitor - 0.040" dia. Vacuum Leak Check....24

EVAP System Monitor - 0.020" dia. Engine Off Natural Vacuum....31

EVAP System Monitor Component Checks....39

- Evap Switching Valve (EVAPSV) Diagnostics....44
- Blocked Purge Line Diagnostics....46
- Single Path Purge Check Valve Diagnostics....48
- Dual Path Purge Check Valve Diagnostics....50

Fuel System Monitor....53

- FAOSC (Rear Fuel Trim) Monitor....59
- Air Fuel Ratio Imbalance Monitor....61

Flex Fuel Operation....64

Front HO2S Monitor....66

- Front HO2S Signal....66
- Front HO2S Heaters....70

Front UEGO Monitor....73

- Front UEGO Signal....73
- Front UEGO Slow/Delayed Response Monitor (2010 MY+)....86
- UEGO Heaters....89

Rear HO2S Monitor....93

- Rear HO2S Signal....93
- Rear HO2S Decel Fuel Shut Off Response Test (2009 MY+)....98
- Rear HO2S Heaters....104

ESM DPFE EGR System Monitor....108

Stepper Motor EGR System Monitor 115
PCV System Monitor 120
PCV System Monitor (GTDI With Speed Density) 121
Enhanced Thermostat Monitor 123
Cold Start Emission Reduction Component Monitor 125
Cold Start Emission Reduction System Monitor 129
Variable Cam Timing System Monitor 132
Gasoline Direct Injection 136
Intake Air Temperature 1 Sensor (IAT1) 137
Charge Air Cooler Temperature Sensor (CACT) 138
Intake Air Temperature 2 Sensor (IAT2) 138
IAT1, CACT, IAT2 Key-Up Correlation Check 140
IAT1, CACT, IAT2 Out of Range Hot Check 142
Barometric Pressure Sensor (BARO) 143
Turbocharger Boost Sensor A (TCB-A) 144
Intake Manifold Pressure (MAP) Sensor 147
BARO, TCB-A, MAP Sensor 3-Way Correlation Check at Key-Up 149
BARO, TCB-A and TCB-A, MAP Sensor 2-Way Correlation Check 150
Compressor Bypass Valve(s) 151
Wastegate Pneumatic Solenoid Valve 152
Vacuum Actuated Wastegate System 153
Wastegate Control Pressure Sensor 155
Boost Control 157
Fuel Injectors, Gasoline Direct Injection 159
Fuel Volume Regulator 161
Fuel Rail Pressure Sensor 163
Fuel Rail Pressure Control 165
Fuel Rail Pressure Control (Cranking) 166
Fuel Rail Pressure Control (CSER) 167
Electronic Throttle Control 168
Accelerator, Brake and Throttle Position Sensor Inputs 169
Electronic Throttle Monitor 171
Throttle Plate Position Controller (TPPC) Outputs 172
Stop Start 173
Stop Start Overview 173
Stop Start Diagnostics 173
Stop Start Enable Conditions: 174
Stop Start Disable Conditions: 174
Stop Start Customer Interface 175

ED_002078G_00001322-00022

Stop Start Button 176
Comprehensive Component Monitor - Engine 176
Engine Temperature Sensor Inputs 176
IAT Rationality Test 183
Fuel Rail Pressure Sensor 186
Mass Air Flow Sensor 188
Manifold Absolute Pressure Sensor 189
MAF/MAP - TP Rationality Test 189
Miscellaneous CPU Tests 191
Engine Off Timer Monitor 192
Central Vehicle Configuration 194
Ignition System Tests 196
Knock Sensor 200
Engine Outputs 201
Electronic Returnless Fuel System 202
Mechanical Returnless Fuel System (MRFS) — Single Speed 203
Mechanical Returnless Fuel System (MRFS) — Dual Speed 203
Intake Manifold Runner Control Systems 205
Intake Manifold Tuning Valve Systems 206
Engine Cooling System Outputs 207
Comprehensive Component Monitor - Transmission 211
Transmission Inputs 211
Transmission Outputs 217
4R75E (RWD) Transmission 223
5R110W (RWD) Transmission 224
6R80 (RWD) Transmission with external PCM or TCM 227
6F55 (FWD) Transmission 231
6F35 (FWD) Transmission with external PCM or TCM 235
DPS6 (FWD) Transmission 241
6R140 (RWD) Transmission with PCM or external TCM 245
On Board Diagnostic Executive 248
Exponentially Weighted Moving Average 250
I/M Readiness 252
In-Use Monitor Performance Ratio 254
Catalyst Temperature Model 255
Serial Data Link MIL Illumination 255
Calculated Load Value 256

ED_002078G_00001322-00023

OBD-I Systems

OBD-I vehicles use the same PCM, CAN serial data communication link, J1962 Data Link Connector, and PCM software as the corresponding OBD-II vehicle. The only difference is the possible removal of the rear oxygen sensor(s), fuel tank pressure sensor, canister vent solenoid, and a different PCM calibration. Starting in the 2006 MY, all Federal vehicles from 8,500 to 14,000 lbs. GVWR will have been phased into OBD-II and OBD-I systems will no longer be utilized in vehicles up to 14,000 lbs GVWR.

OBD-II Systems

On Board Diagnostics II - Passenger Cars, Light-Duty Trucks, and Medium-Duty Vehicles and Engines certified under title 13, CCR section 1968.2

California OBD-II applies to all California and "CAA Sec. 177 States" for gasoline engine vehicles up to 14,000 lbs. Gross Vehicle Weight Rating (GVWR) starting in the 1996 MY and all diesel engine vehicles up to 14,000 lbs. GVWR starting in the 1997 MY.

"CAA Sec. 177 States" or "California States" are states that have adopted and placed into effect the California Air Resources Board (CARB) regulations for a vehicle class or classes in accordance with Section 177 of the Clean Air Act.. At this time, “CAA Sec. 177 States" are Massachusetts, New York, Vermont and Maine for 2004, Rhode Island, Connecticut, Pennsylvania for 2008, New Jersey, Washington, Oregon for 2009, Maryland for 2011, Delaware for 2014 and New Mexico for 2016. These States receive California-certified vehicles for passenger cars and light trucks, and medium-duty vehicles, up to 14,000 lbs. GVWR."

Federal OBD applies to all gasoline engine vehicles up to 8,500 lbs. GVWR starting in the 1996 MY and all diesel engine vehicles up to 8,500 lbs. GVWR starting in the 1997 MY. US Federal only OBD-certified vehicles may use the US Federal allowance to certify to California OBD II but then turn off/disable 0.020" evap leak detection).

Starting in the 2004 MY, Federal vehicle over 8,500 lbs. are required to phase in OBD-II. Starting in 2004 MY, gasoline-fueled Medium Duty Passenger Vehicles (MDPVs) are required to have OBD-II. By the 2006 MY, all Federal vehicles from 8,500 to 14,000 lbs. GVWR will have been phased into OBD-II.

OBD-II system implementation and operation is described in the remainder of this document.

Heavy Duty OBD Systems

Heavy Duty On-Board Diagnostics - Heavy-duty engines (>14,000 GVWR) certified to HD OBD under title 13, CCR section 1971.1(d)(7.1.1) or (7.2.2) (i.e., 2010 and beyond model year diesel and gasoline engines that are subject to full HD OBD)

Starting in the 2010 MY, California and Federal gasoline-fueled and diesel fueled on-road heavy duty engines used in vehicles over 14,000 lbs. GVWR are required to phase into HD OBD. The phase-in starts with certifying one engine family to HD OBD in the 2010 MY. (2010 MY 6.8L 3V Econoline) By the 2013 MY, all engine families must certify to the HD OBD requirements. Vehicles/engines that do not comply with HD OBD during the phase-in period must comply with EMD+.

ED_002078G_00001322-00024

EMD Systems

Engine Manufacturer Diagnostics (EMD) – Heavy duty vehicles (>14,000 GVWR) certified to EMD under title 13, CCR section 1971 (e.g., 2007-2009 model year diesel and gasoline engines)

Engine Manufacturer Diagnostics (EMD) applies to all 2007 MY and beyond California gasoline-fueled and diesel fueled on-road heavy duty engines used in vehicles over 14,000 lbs Gross Vehicle Weight Rating (GVWR). EMD systems are required to functionally monitor the fuel delivery system, exhaust gas recirculation system, particulate matter trap, as well as emission related ECM input inputs for circuit continuity and rationality, and emission-related outputs for circuit continuity and functionality. For gasoline engines, which have no PM trap, EMD requirements are very similar to current OBD-I system requirements. As such, OBD-I system philosophy will be employed, the only change being the addition of some comprehensive component monitor (CCM) rationality and functionality checks.

Engine Manufacturer Diagnostics Enhanced (EMD+) - Heavy-duty engines (>14,000 GVWR) certified to EMD+ under title 13, CCR section 1971.1 (e.g., 2010-2012 model year diesel and gasoline engines not certified to HD OBD, 2013-2019 model year alternate fuel engines)

Starting in the 2010 MY, EMD was updated to require functional monitoring of the NOx aftertreatment system on gasoline engines. This requirement is commonly known as EMD+.

EMD+ vehicles use that same PCM, CAN serial data communication link, J1962 Data Link Connector, and PCM software as the corresponding OBD-II vehicle. The only difference is the possible removal of the fuel tank pressure sensor, canister vent solenoid, and a different PCM calibration.

The following list indicates what monitors and functions have been altered from OBD-II for EMD calibrations:

Monitor / Feature	Calibration
Catalyst Monitor	Functional catalyst monitor required starting in the 2010 MY to meet EMD+.
Misfire Monitor	Calibrated in for service, all DTCs are non-MIL. Catalyst damage misfire criteria calibrated out, emission threshold criteria set to 4%, enabled between 150 °F and 220 °F, 254 sec start-up delay.
Oxygen Sensor Monitor	Front O2 sensor "lack of switching" tests and all circuit and heater tests calibrated in, response/delay test calibrated out. Rear O2 sensor functional tests and all circuit and heater tests calibrated in, response/delay test calibrated out.
EGR/VVT Monitor	Same as OBD-II calibration except that P0402 test uses slightly higher threshold.
Fuel System Monitor	Fuel monitor and FAOSC monitor (rear fuel trim for UEGO systems) same as OBD-II calibration, A/F imbalance monitor calibrated out.
Secondary Air Monitor	Not applicable, AIR not used.
Evap System Monitor	Evap system leak check calibrated out, fuel level input circuit checks retained as non-MIL. Fuel tank pressure sensor and canister vent solenoid may be deleted.
PCV Monitor	Same hardware and function as OBD-II.
Thermostat Monitor	Thermostat monitor calibrated out.
Comprehensive Component Monitor	All circuit checks, rationality and functional tests same as OBD-II.
Communication Protocol and DLC	Same as OBD-II, all generic and enhanced scan tool modes work the same as OBD-II but reflect the EMD calibration that contains fewer supported monitors. "OBD Supported" PID indicates EMD ($11).
MIL Control	Same as OBD-II, it takes 2 driving cycles to illuminate the MIL.

EMD system implementation and operation is a subset of OBD-II and is described in the remainder of this document.

ED_002078G_00001322-00025

Catalyst Efficiency Monitor

The Catalyst Efficiency Monitor uses an oxygen sensor after the catalyst to infer the hydrocarbon efficiency based on oxygen storage capacity of the ceria and precious metals in the washcoat. Under normal, closed-loop fuel conditions, high efficiency catalysts have significant oxygen storage. This makes the switching frequency of the rear HO2S very slow and reduces the amplitude of those. As catalyst efficiency deteriorates due to thermal and/or chemical deterioration, its ability to store oxygen declines and the post-catalyst HO2S signal begins to switch more rapidly with increasing amplitude. The predominant failure mode for high mileage catalysts is chemical deterioration (phosphorus deposition on the front brick of the catalyst), not thermal deterioration.

Index Ratio Method Using a Switching HO2S Sensor

In order to assess catalyst oxygen storage, the catalyst monitor counts front HO2S switches during part-throttle, closed-loop fuel conditions after the engine is warmed-up and inferred catalyst temperature is within limits. Front switches are accumulated in up to three different air mass regions or cells. While catalyst monitoring entry conditions are being met, the front and rear HO2S signal lengths are continually being calculated. When the required number of front switches has accumulated in each cell (air mass region), the total signal length of the rear HO2S is divided by the total signal length of front HO2S to compute a catalyst index ratio. An index ratio near 0.0 indicates high oxygen storage capacity, hence high HC efficiency. An index ratio near 1.0 indicates low oxygen storage capacity, hence low HC efficiency. If the actual index ratio exceeds the threshold index ratio, the catalyst is considered failed.

If the catalyst monitor does not complete during a particular driving cycle, the already-accumulated switch/signal-length data is retained in Keep Alive Memory and is used during the next driving cycle to allow the catalyst monitor a better opportunity to complete, even under short or transient driving conditions.

If the catalyst monitor runs to completion during a driving cycle, it will be allowed to run again and collect another set of data during the same driving cycle. This would allow the catalyst monitor to complete up to a maximum of two times per driving cycle, however, the in-use performance ratio numerator for the catalyst monitor will only be allowed to increment once per driving cycle. For example, if the catalyst monitor completes twice during the current driving cycle, the catalyst monitor in-use performance numerator will be incremented once during the current driving cycle and will incremented again for the second completion on the following driving cycle, after the catalyst monitor entry condition have been met.

Index Ratio Method Using a Wide Range HO2S Sensor (UEGO)

The switching HO2S control system compares the HO2S signals before and after the catalyst to assess catalyst oxygen storage. The front HO2S signal from UEGO control system is used to control to a target A/F ratio and does not have "switches" As a result, a new method of catalyst monitor is utilized.

The UEGO catalyst monitor is an active/intrusive monitor. The monitor performs a calibratable 10-20 second test during steady state rpm, load and engine air mass operating conditions at normal vehicle speeds. During the test, the fuel control system remains in closed loop, UEGO control with fixed system gains. In order to assess catalyst oxygen storage, the UEGO catalyst monitor is enabled during part-throttle, closed-loop fuel conditions after the engine is warmed-up and inferred catalyst temperature is within limits. While the catalyst monitoring entry conditions are being met, the rear HO2S signal length is continually being calculated. When the required total calibrated time has been accumulated, the total voltage signal length of the rear HO2S is divided by a calibrated threshold rear HO2S signal length to compute a catalyst index ratio. The threshold rear HO2S signal is calibrated as a function of air mass using a with a catalyst with no precious metal. This catalyst defines the worst case signal length because it has no oxygen storage. If the monitored catalyst has sufficient oxygen storage, little activity is observed on the rear HO2S voltage signal. An index ratio near 0.0 indicates high oxygen storage capacity, hence high HC/NOx efficiency. As catalyst oxygen storage degrades, the rear HO2S voltage signal activity increases. An index ratio near, 1.0 indicates low oxygen storage capacity, hence low HC/NOx efficiency. If the actual index ratio exceeds the calibrated threshold ratio, the catalyst is considered failed.

ED_002078G_00001322-00026

Integrated Air/Fuel Method

The Integrated Air/Fuel Catalyst Monitor assesses the oxygen storage capacity of a catalyst after a fuel cut event. The monitor integrates how much excess fuel is needed to drive the monitored catalyst to a rich condition starting from an oxygen-saturated, lean condition. Therefore, the monitor is a measure of how much fuel is required to force catalyst breakthrough from lean to rich. To accomplish this, the monitor runs during fuel reactivation following a Decel Fuel Shut Off (DFSO) event. The monitor completes after a calibrated number of DFSO monitoring events have occurred. The IAF catalyst monitor can be used with either a wide range O2 sensor (UEGO) or a conventional switching sensor (HEGO).

Functionally, the equation is:

$$IAF = \int \left(\frac{Fuel_needed_for_stoich}{Fuel_Measured} - Fuel_needed_for_stoich \right)$$

where the units are in pounds mass of fuel.

The monitor runs during reactivation fueling following an injector cut. The diagram below shows examples of one DFSO event with a threshold catalyst and with a Full Useful Life catalyst where:

- INJON = # of injectors on.
- CMS is the catalyst monitor sensor voltage. When the rear O2 sensor crosses 0.45 volts (i.e. rich) the monitor will complete for the given DFSO event.
- LAM (LAMBDA) is the front O2 sensor (UEGO) signal.
- CATMN_IAF_SUM is the integral from the equations above (Y axis on the right).

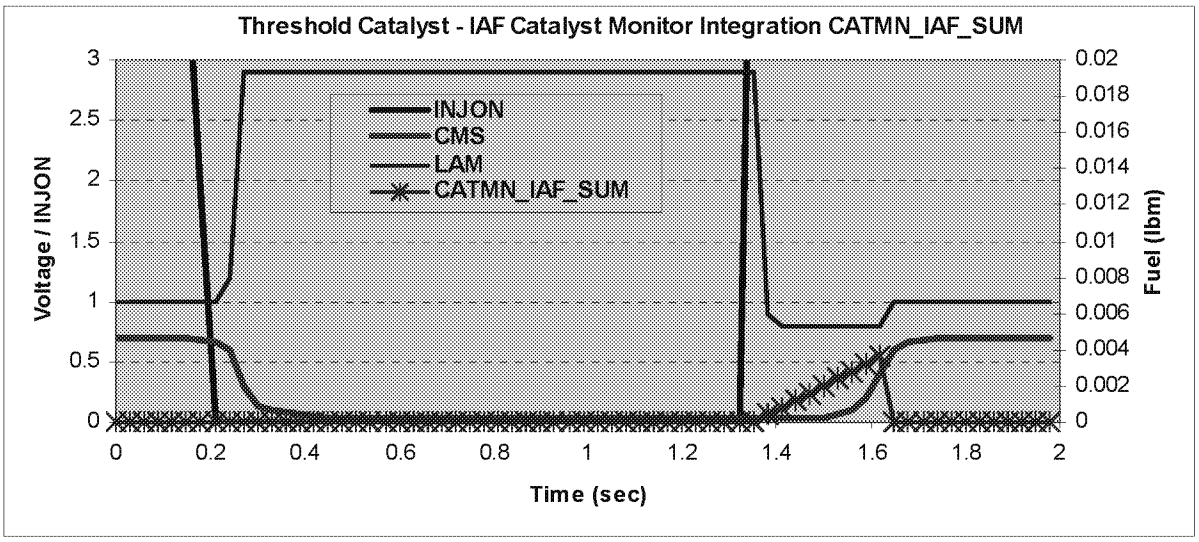

In this example, CATMN_IAF_SUM is small because it doesn't take much fuel to break though a low oxygen storage threshold catalyst.

ED_002078G_00001322-00027

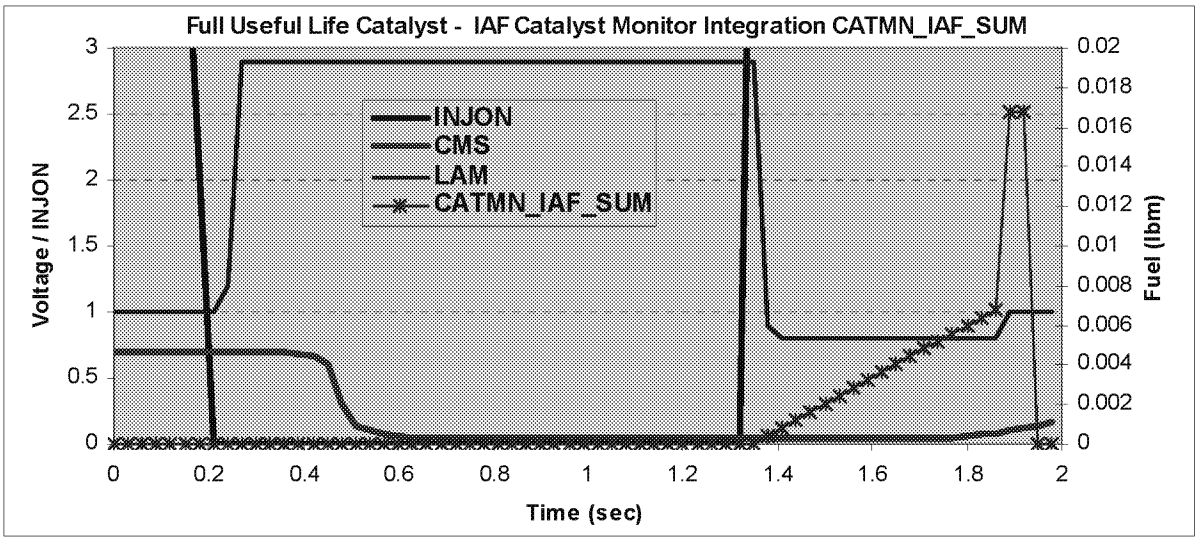

In this example, CATMN_IAF_SUM is much larger because it takes a substantial amount of fuel to break though a high oxygen storage threshold catalyst.

There are two sets of entry conditions into the IAF catalyst monitor. The high level entry conditions determine that the monitor would like to run following the next injector fuel cut event. The lower level entry conditions determine that the fuel cut-off event was suitable for monitoring and the monitor will run as soon as the injectors come back on.

1. The high level entry conditions are met when:

- There are no senor/hardware faults
- The base monitor entry conditions have been met (ECT, IAT, cat temp, fuel level, air mass)
- Required number of DFSO monitoring event have not yet completed

2. The lower level entry conditions are met when:

- The injectors are off
- The catalyst is believed to be saturated with oxygen (rear O2 indicates lean)
- The catalyst/rear O2 has been rich at least once since the last monitor event.

ED_002078G_00001322-00028

General Catalyst Monitor Operation

Rear HO2S sensors can be located in various ways to monitor different kinds of exhaust systems. In-line engines and many V-engines are monitored by individual bank. A rear HO2S sensor is used along with the front, fuel-control HO2S sensor for each bank. Two sensors are used on an in-line engine; four sensors are used on a V-engine. Some V-engines have exhaust banks that combine into a single underbody catalyst. These systems are referred to as Y-pipe systems. They use only one rear HO2S sensor along with the two front, fuel-control HO2S sensors. Y-pipe system use three sensors in all. For Y-pipe systems which utilize switching front O2 sensors, the two front HO2S sensor signals are combined by the software to infer what the HO2S signal would have been in front of the monitored catalyst. The inferred front HO2S signal and the actual single, rear HO2S signal is then used to calculate the switch ratio.

Many vehicles monitor less than 100% of the catalyst volume – often the first catalyst brick of the catalyst system. Partial volume monitoring is done on LEV-II vehicles in order to meet the 1.75 * emission-standard threshold for NMHC and NOx. The rationale for this practice is that the catalysts nearest the engine deteriorate first, allowing the catalyst monitor to be more sensitive and illuminate the MIL properly at lower emission standards.

Many applications that utilize partial-volume monitoring place the rear HO2S sensor after the first light-off catalyst can or, after the second catalyst can in a three-can per bank system. (A few applications placed the HO2S in the middle of the catalyst can, between the first and second bricks.)

The new Integrated Air/Fuel Catalyst Monitor can be used to monitor the entire catalyst volume, even on LEV-II vehicles.

Index ratios for ethanol (Flex fuel) vehicles vary based on the changing concentration of alcohol in the fuel. The malfunction threshold typically increases as the percent alcohol increases. For example, a malfunction threshold of 0.5 may be used at E10 (10% ethanol) and 0.9 may be used at E85 (85% ethanol). The malfunction thresholds are therefore adjusted based on the % alcohol in the fuel. (Note: Normal gasoline is allowed to contain up to 10% ethanol (E10)).

Vehicles with the Index Ratio Method Using a Switching HO2S Sensor employ an Exponentially Weighted Moving Average (EWMA) algorithm to improve the robustness of the catalyst monitor. During normal customer driving, a malfunction will illuminate the MIL, on average, in 3 to 6 driving cycles. If KAM is reset (battery disconnected) or DTCs are cleared, a malfunction will illuminate the MIL in 2 driving cycles. See the section on EWMA for additional information.

Vehicles with the Index Ratio Method Using a Wide Range HO2S Sensor (UEGO) or the Integrated Air/Fuel catalyst monitor employ an improved version of the EWMA algorithm.

The EWMA logic incorporates several important CARB requirements. These are:

- Fast Initial Response (FIR): The first 4 tests after a battery disconnect or code clear will process unfiltered data to quickly indicate a fault. The FIR will use a 2-trip MIL. This will help the service technician determine that a fault has been fixed.

- Step-change Logic (SCL): The logic will detect an abrupt change from a no-fault condition to a fault condition. The SCL will be active after the 4th catalyst monitor cycle and will also use a 2-trip MIL. This will illuminate the MIL when a fault is instantaneously induced.

- Normal EWMA (NORM): This is the normal mode of operation and uses an Exponentially Weighted Moving Average (EWMA) to filter the catalyst monitor test data. It is employed after the 4th catalyst test and will illuminate a MIL during the drive cycle where the EWMA value exceeds the fault threshold. (1 trip MIL).

ED_002078G_00001322-00029

Starting in the 2010 ½ Model Year and later, the catalyst monitor will employ catalyst break-in logic. This logic will prevent the catalyst monitor from running until after a catalyst break-in period.

The catalyst monitor will not run on a new vehicle from the assembly plant until 60 minutes of time above a catalyst temperature (typically 800 to 1100 deg F) has been accumulated or 300 miles has elapsed.

New modules at the assembly plant will have an NVRAM flag initialized to delay the catalyst monitor. Service modules and re-flash software will have the flag set to allow that catalyst monitor to run. The flag cannot be reset to delay the catalyst monitor from running by any tool or service procedure.

ED_002078G_00001322-00030

Index Ratio Catalyst Monitor

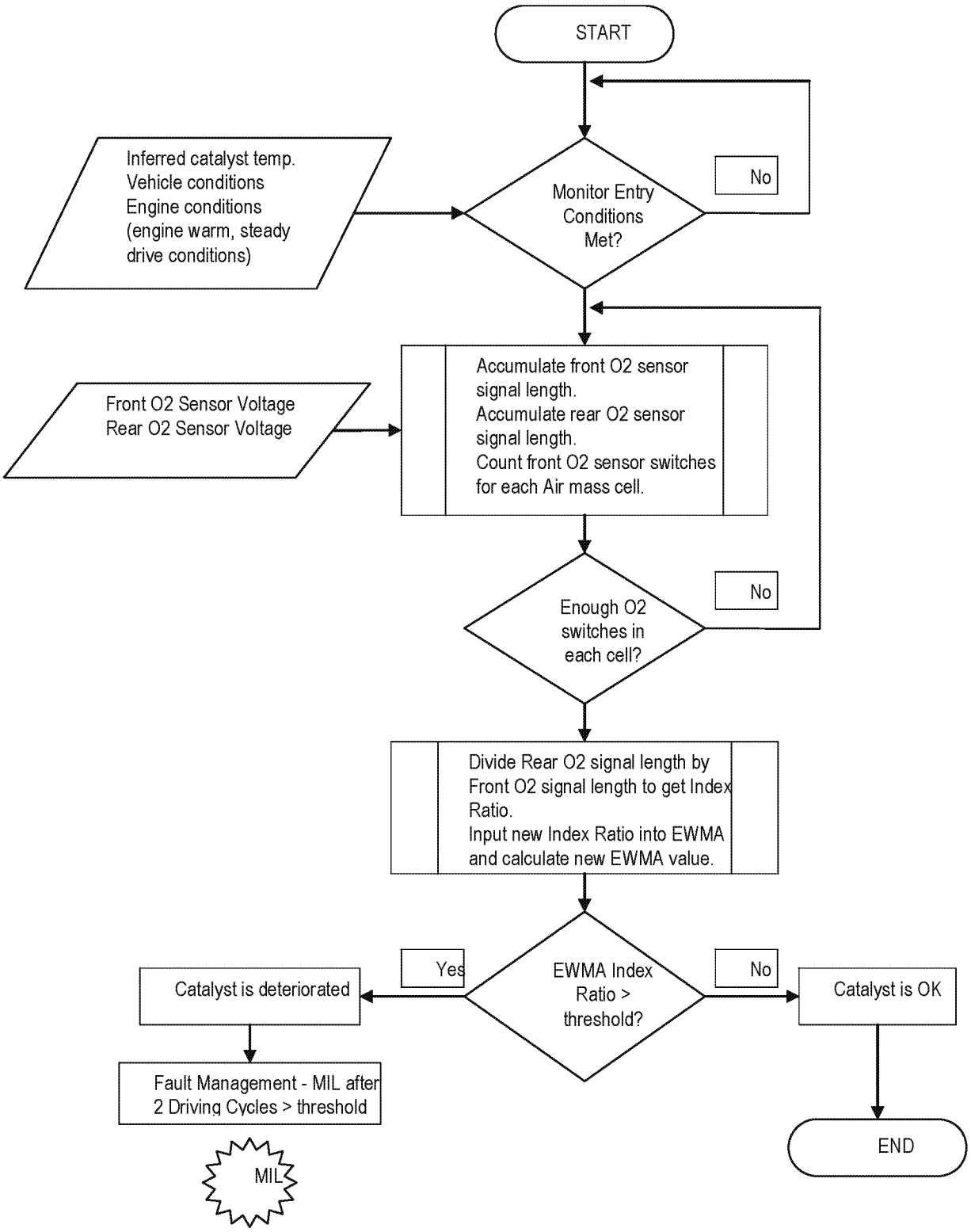

ED_002078G_00001322-00031

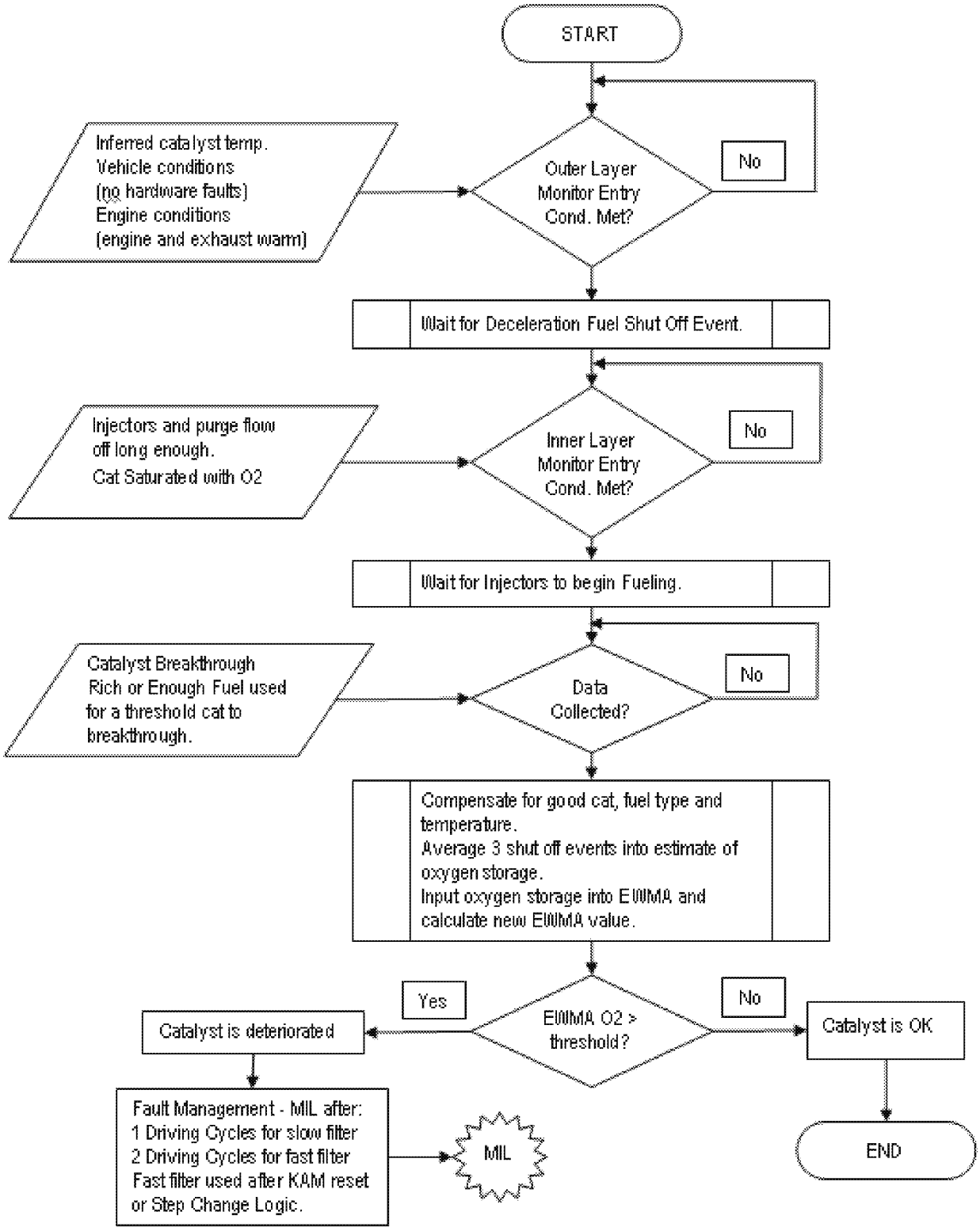
START
Inferred catalyst temp.
Vehicle conditions
(no hardware faults)
Engine conditions
(engine and exhaust warm)
Outer Layer Monitor Entry Cond. Met?
No
Wait for Deceleration Fuel Shut Off Event.
Injectors and purge flow off long enough.
Cat Saturated with O2
Inner Layer Monitor Entry Cond. Met?
No
Wait for Injectors to begin Fueling.
Catalyst Breakthrough Rich or Enough Fuel used for a threshold cat to breakthrough.
Data Collected?
No
Compensate for good cat, fuel type and temperature.
Average 3 shut off events into estimate of oxygen storage.
Input oxygen storage into EWMA and calculate new EWMA value.
Yes
EWMA O2 > threshold?
No
Catalyst is deteriorated
Catalyst is OK
Fault Management - MIL after:
1 Driving Cycles for slow filter
2 Driving Cycles for fast filter
Fast filter used after KAM reset or Step Change Logic.
MIL
END

CATALYST MONITOR OPERATION:	
DTCs	P0420 Bank 1 (or Y-pipe), P0430 Bank 2
Monitor execution	once per driving cycle
Monitor Sequence	HO2S response test complete and no DTCs (P0133/P0153) prior to calculating switch ratio, no SAIR pump stuck on DTCs (P0412/P1414), no evap leak check DTCs (P0442/P0456), no EGR stuck open DTCs (P0402)
Sensors OK	ECT, IAT, TP, VSS, CKP, MAF, no misfire DTCs (P0300, P0310), no ignition coil DTCs (P0351-P0358), no fuel monitor DTCs (P0171, P0172, P0174. P0175), no VCT DTCs (P0010-P0017, P052A, P052B, P0344, P0365, P0369-bank1) (P0018 thru P0025,P052C, P052D, P0349, P0390, P0394- bank2).no evap system DTCs (P0443, P0446, P0455, P0457, P1450), no ETC system DTCs (P0122, P0123, P0222, P0223, P02135) (P2101, P2107, P2111, P2112) (P0600, P060A, P060B, P060C, P061B, P061C, P061D, P1674, U0300).
Monitoring Duration	Approximately 700 seconds during appropriate FTP conditions (approximately 100 to 200 oxygen sensor switches are collected) for switching O2 control sensors Approximately 10 to 20 seconds for wide range O2 index ratio monitor. 3 Decel Fuel Cutoff events for IAF catalyst monitor

TYPICAL SWITCHING O2 SENSOR INDEX RATIO CATALYST MONITOR ENTRY CONDITIONS:		
Entry condition	Minimum	Maximum
Time since engine start-up (70 °F start)	330 seconds	
Engine Coolant Temp	170 °F	230 °F
Intake Air Temp	20 °F	180 °F
Time since entering closed loop fuel	30 sec	
Inferred Rear HO2S sensor Temperature	900 °F	
EGR flow (Note: an EGR fault disables EGR)	1%	12%
Throttle Position	Part Throttle	Part Throttle
Rate of Change of Throttle Position		0.2 volts / 0.050 s
Vehicle Speed	5 mph	70 mph
Fuel Level	15%	
First Air Mass Cell	1.0 lb/min	2.0 lb/min
Engine RPM for first air mass cell	1,000 rpm	1,300 rpm
Engine Load for first air mass cell	15%	35%
Monitored catalyst mid-bed temp. (inferred) for first air mass cell	850 °F	1,200 °F
Number of front O2 switches required for first air mass cell	50	
Second Air Mass Cell	2.0 lb/min	3.0 lb/min
Engine RPM for second air mass cell	1,200 rpm	1,500 rpm
Engine Load for second air mass cell	20%	35%
Monitored catalyst mid-bed temp. (inferred) for second air mass cell	900 °F	1,250 °F
Number of front O2 switches required for second air mass cell	70	

Third Air Mass Cell	3.0 lb/min	4.0 lb/min
Engine RPM for third air mass cell	1,300 rpm	1,600 rpm
Engine Load for third air mass cell	20%	40%
Monitored catalyst mid-bed temp. (inferred) for third air mass cell	950 °F	1,300 °F
Number of front O2 switches required for third air mass cell	30	
(Note: Engine rpm and load values for each air mass cell can vary as a function of the power-to-weight ratio of the engine, transmission and axle gearing and tire size.)		

TYPICAL WIDE RANGE O2 SENSOR INDEX RATIO CATALYST MONITOR ENTRY CONDITIONS:		
Entry condition	Minimum	Maximum
Time since engine start-up (70 °F start)	330 seconds	
Engine Coolant Temp	170 °F	230 °F
Intake Air Temp	20 °F	180 °F
Time since entering closed loop fuel	30 sec	
Inferred Rear HO2S sensor Temperature	900 °F	
EGR flow (Note: an EGR fault disables EGR)	1%	12%
Throttle Position	Part Throttle	Part Throttle
Rate of Change of Throttle Position		0.2 volts / 0.050 s
Vehicle Speed	20 mph	80 mph
Fuel Level	15%	
Air Mass	2.0 lb/min	5.0 lb/min
Engine RPM	1,000 rpm	2,000 rpm
Engine Load	20%	60%
Monitored catalyst mid-bed temp. (inferred) for first air mass cell	850 °F	1,200 °F
(Note: Engine rpm, load and air mass values can vary as a function of the power-to-weight ratio of the engine, transmission and axle gearing and tire size.)		

ED_002078G_00001322-00034

TYPICAL IAF CATALYST MONITOR ENTRY CONDITIONS:		
Entry condition	Minimum	Maximum
Engine Coolant Temp	160 °F	250 °F
Intake Air Temp	20 °F	140 °F
Inferred catalyst mid-bed temperature	900 °F	1500 °F
Fuel Level	15%	
Air Mass		2.0 lb/min
Minimum inferred rear O2 sensor temperature	800 °F	
Fuel monitor learned within limits	97%	103%
Rear O2 sensor rich since last monitor attempt	0.45 volts	
Rear O2 sensor lean with injectors off (voltage needed to enter monitor)		0.1 volts
Rear O2 sensor reads rich after fuel turned back on (voltage needed to complete monitor)	0.45 volts	

TYPICAL MALFUNCTION THRESHOLDS:
Catalyst monitor index ratio > 0.75 (bank monitor)
Catalyst monitor index-ratio > 0.60 (Y-pipe monitor)
Catalyst monitor index ratio > 0.50 for E10 to > 0.90 for E85 (flex fuel vehicles)

Mode $06 reporting for IAF Catalyst Monitor

The catalyst monitor results are converted to a ratio for Mode $06 reporting to keep the same look and feel for the service technician. The equation for calculating the Mode $06 monitor result is:

1 – (Actual reactivation fuel/ Good catalyst reactivation fuel)

Good catalyst reactivation fuel is intended to represent what the monitor would measure for a green catalyst.

J1979 CATALYST MONITOR MODE $06 DATA			
Monitor ID	Test ID	Description	
$21	$80	Bank 1 index-ratio and max. limit (P0420/P0430)	unitless
$22	$80	Bank 2 index-ratio and max. limit (P0420/P0430)	unitless

** NOTE: In this document, a monitor or sensor is considered OK if there are no DTCs stored for that component or system at the time the monitor is running.

Misfire Monitor

The input to the Misfire Monitor is the signal from the crankshaft position sensor and timing wheel. The signal is acquired and processed by the PCM and provided to the Misfire Monitor as individual tooth period measurements. The Monitor uses the tooth period measurements to calculate crankshaft acceleration signals for misfire detection. All misfire processing is performed in software (separate chips are no longer used except for some vehicle lines that may still be using older style PCMs.)

Two different technologies are used for misfire monitoring. They are the Low Data Rate (LDR), and High Data Rate (HDR) systems. The LDR system is capable of meeting the FTP monitoring requirements on most engines and is capable of meeting "full-range" misfire monitoring requirements on 3 and 4-cylinder engines. It is also used on 6 cylinder engines with rear mounted crank sensors. The HDR system is capable of meeting "full-range" misfire monitoring requirements on 8 and 10 cylinder engines. All software allows for detection of any misfires that occur 6 engine revolutions after initially cranking the engine. This meets the OBD-II requirement to identify misfires within 2 engine revolutions after exceeding the warm drive, idle rpm.

The Monitor includes a diagnostic check on the crank sensor input. The Monitor checks the number of tooth period measurements received on each cylinder event. A P1336 will be set if the Monitor receives an invalid number of tooth period measurements. A P1336 points to noise present on the crank sensor input or a lack of synchronization between the cam and crank sensors.

Low Data Rate System

The LDR Misfire Monitor uses a low-data-rate crankshaft position signal, (i.e. one time measurement signal for each cylinder event). The PCM calculates crankshaft rotational velocity for each cylinder from this crankshaft position signal. The acceleration for each cylinder can then be calculated using successive velocity values. The changes in overall engine rpm are removed by subtracting the median engine acceleration over a complete engine cycle. The crankshaft acceleration is then processed by three algorithms. The first algorithm, called pattern cancellation, is optimized for detection of sporadic patterns of misfire. The algorithm learns the normal pattern of cylinder accelerations from the mostly good firing events and is then able to accurately detect deviations from that pattern. The second algorithm, called pattern cancellation by opposing engine rev or "pc-rev", is optimized for single cylinder patterns. The algorithm compares the acceleration of a cylinder to its opposite cylinder on the opposing engine rev. The algorithm learns the normal patterns that repeat every engine rev and is then able to accurately detect deviations between the paired cylinders. The third algorithm is a non-filtered acceleration signal that is a general purpose signal for all patterns including multi-cylinder patterns. The resulting deviant cylinder acceleration values are used in evaluating misfire in the "General Misfire Algorithm Processing" section below.

High Data Rate System

The High Data Rate (HDR) Misfire Monitor uses a high data rate crankshaft position signal, (i.e. one time measurement signal per each 2 teeth for a total of 36 measurements for one engine cycle). This high-resolution signal is processed with a digital low pass filter. The low pass filter filters the high-resolution crankshaft velocity signal to remove some of the crankshaft torsional vibrations that degrade signal to noise. Two low pass filters are used to enhance detection capability – a "base" filter and a more aggressive filter to enhance single-cylinder capability at higher rpm. This significantly improves detection capability for continuous misfires on single cylinders up to redline. The changes in overall engine rpm are removed by subtracting the median engine acceleration over a complete engine cycle. The crankshaft acceleration is then processed by three algorithms similar to the LDR system. The final stage is to decimate the high resolution signals by selecting the peak acceleration values from within a window location for each cylinder. The resulting deviant cylinder acceleration values are used in evaluating misfire in the "General Misfire Algorithm Processing" section below.

ED_002078G_00001322-00036

Low Data Rate and High Data Rate Systems

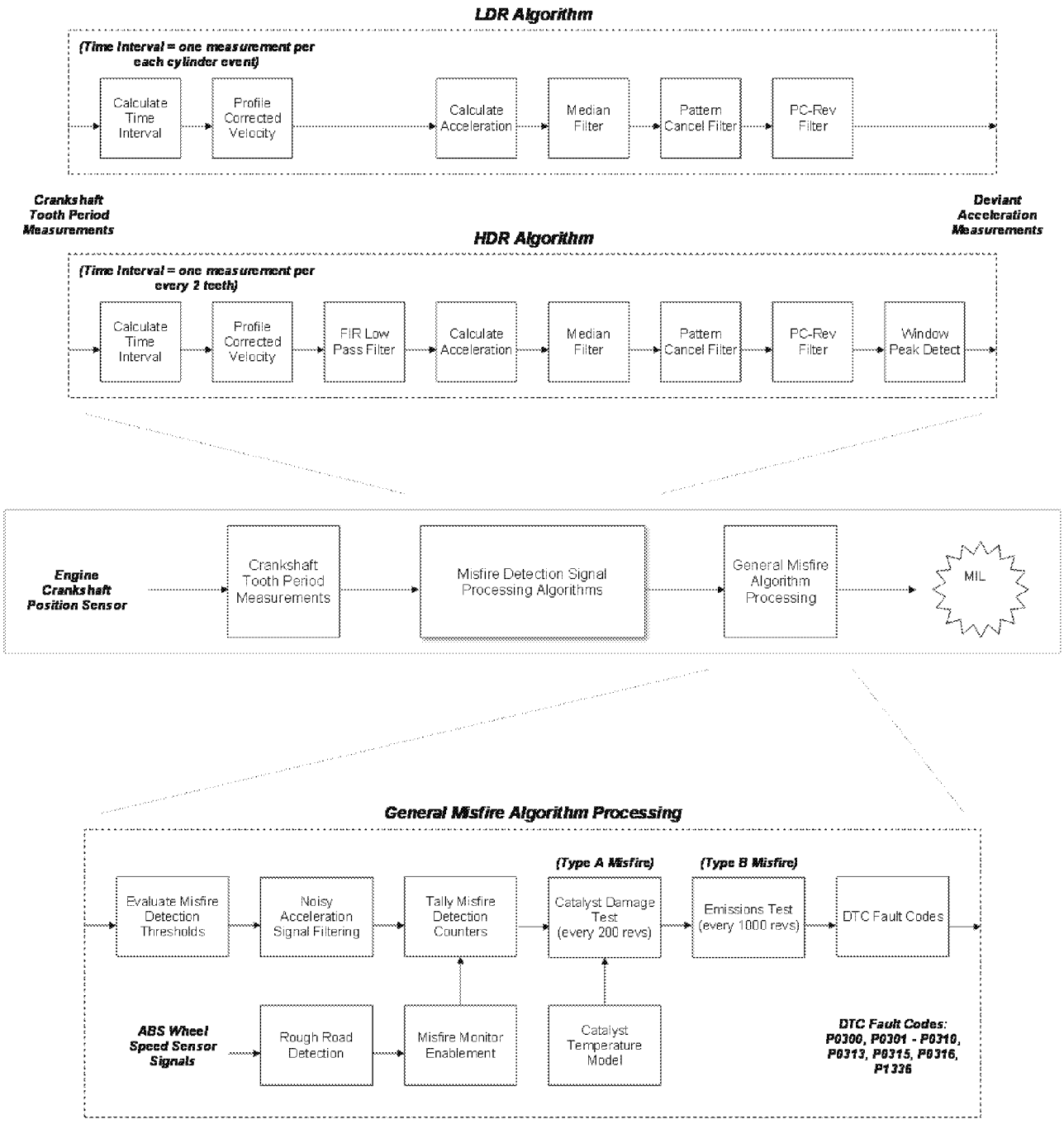

Example LDR Tooth Period Measurements (V8 engine with 36-1 Tooth Wheel)

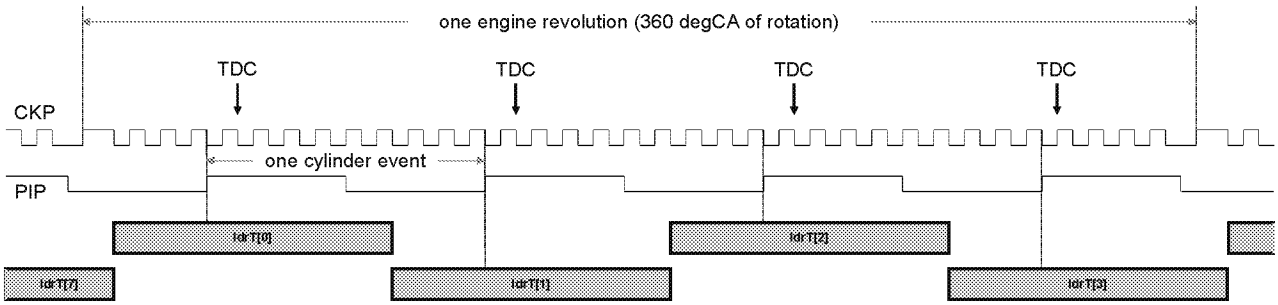

One time measurement per each cylinder event

Example HDR Tooth Period Measurements (V8 engine with 36-1 Tooth Wheel)

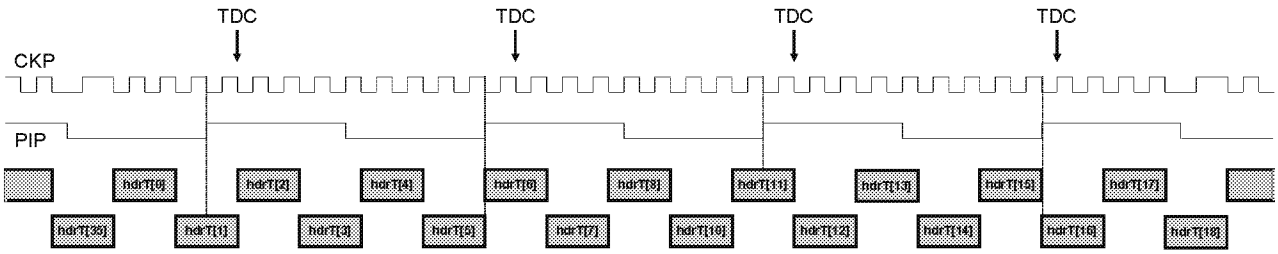

One time measurement per each 2 teeth (36 measurements over 720 degCA of rotation)

ED_002078G_00001322-00038

General Misfire Algorithm Processing

The acceleration that a piston undergoes during a normal firing event is directly related to the amount of torque that cylinder produces. The calculated piston/cylinder acceleration value(s) are compared to a misfire threshold that is continuously adjusted based on inferred engine torque. Deviant accelerations exceeding the threshold are conditionally labeled as misfires. . A threshold multiplier is used during startup CSER to compensate the thresholds for the reduction in signal amplitude during spark retard conditions.

The calculated deviant acceleration value(s) are also evaluated for noise. Normally, misfire results in a non-symmetrical loss of cylinder acceleration. Mechanical noise, such as rough roads or crankshaft oscillations at low rpm/high load ("lugging") conditions, will produce symmetrical, positive acceleration variations. Noise limits are calculated by applying a negative multiplier to the misfire threshold. If the noise limits are exceeded, a noisy signal condition is inferred and the misfire monitor is suspended for a brief interval. Noise-free deviant acceleration exceeding a given threshold is labeled a misfire.

The number of misfires is counted over a continuous 200 revolution and 1000 revolution period. (The revolution counters are not reset if the misfire monitor is temporarily disabled such as for negative torque mode, etc.) At the end of the evaluation period, the total misfire rate and the misfire rate for each individual cylinder is computed. The misfire rate is evaluated every 200 revolution period (Type A) and compared to a threshold value obtained from an engine speed/load table. This misfire threshold is designed to prevent damage to the catalyst due to sustained excessive temperature (1650°F for Pt/Pd/Rh advanced washcoat and 1800°F for Pd-only high tech washcoat). If the misfire threshold is exceeded and the catalyst temperature model calculates a catalyst mid-bed temperature that exceeds the catalyst damage threshold, the MIL blinks at a 1 Hz rate while the misfire is present. If the misfire occurs again on a subsequent driving cycle, the MIL is illuminated. At high engine speed and load operating conditions the Monitor continuously evaluates the misfire rate during each 200 rev period. If a sufficient number of misfire events have been accumulated within a 200 rev block such that the misfire threshold is already exceeded before the end of the block has been reached, the Monitor will declare a fault immediately rather than wait for the end of the block. This improves the capability of the Monitor to prevent damage to the catalyst.

If a single cylinder is determined to be consistently misfiring in excess of the catalyst damage criteria, the fuel injector to that cylinder will be shut off for 30 seconds to prevent catalyst damage. Up to two cylinders may be disabled at the same time on 6 and 8 cylinder engines and one cylinder is disabled on 4 cylinder engines. This fuel shut-off feature is used on all engines starting in the 2005 MY. After 30 seconds, the injector is re-enabled. If misfire on that cylinder is again detected after 200 revs (about 5 to 10 seconds), the fuel injector will be shut off again and the process will repeat until the misfire is no longer present. Note that ignition coil primary circuit failures (see CCM section) will trigger the same type of fuel injector disablement.

If fuel level is below 15%, the misfire monitor continues to evaluate misfire over every 200 revolution period to determine if catalyst damaging misfire is present so that the fuel shut-off can be utilized to control catalyst temperatures. If this is the case, a P0313 DTC will be set to indicate that misfire occurred at low fuel levels. The P0313 DTC is set in place of engine misfire codes (P030x) if a misfire fault is detected with low fuel level.

The misfire rate is also evaluated every 1000 rev period and compared to a single (Type B) threshold value to indicate an emission-threshold malfunction, which can be either a single 1000 rev exceedence from startup or four subsequent 1000 rev exceedences on a drive cycle after start-up. Some vehicles will set a P0316 DTC if the Type B malfunction threshold is exceeded during the first 1,000 revs after engine startup. This DTC is normally stored in addition to the normal P03xx DTC that indicates the misfiring cylinder(s). If misfire is detected but cannot be attributed to a specific cylinder, a P0300 is stored. This may occur on some vehicles at higher engine speeds, for example, above 3,500 rpm.

Rough Road Detection

The Misfire Monitor includes a Rough Road Detection (RRD) system to eliminate false misfire indications due to rough road conditions. The RRD system uses data from ABS wheel speed sensors for estimating the severity of rough road conditions. This is a more direct measurement of rough road over other methods which are based on driveline feedback via crankshaft velocity measurements. It improves accuracy over these other methods since it eliminates interactions with actual misfire.

ED_002078G_00001322-00039

In the event of an RRD system failure, the RRD output will be ignored and the Misfire Monitor will remain active. An RRD system failure could be caused by a failure in any of the input signals to the algorithm. This includes the ABS wheel speed sensors, Brake Pedal sensor, or CAN bus hardware failures. Specific DTCs will indicate the source of these component failures.

A redundant check is also performed on the RRD system to verify it is not stuck high due to other unforeseen causes. If the RRD system indicates rough road during low vehicle speed conditions where it is not expected, the RRD output will be ignored and the Misfire Monitor will remain active.

Profile Correction

"Profile correction" software is used to learn and correct for mechanical inaccuracies in the crankshaft position wheel tooth spacing. Since the sum of all the angles between crankshaft teeth must equal 360°, a correction factor can be calculated for each misfire sample interval that makes all the angles between individual teeth equal. The LDR misfire system learns one profile correction factor per cylinder (ex. 4 correction factors for a 4 cylinder engine), while the HDR system learns 36, 40 or 60 correction factors depending on the number of crankshaft wheel teeth (ex. 35 for some V6/V8 engines, 39 for V10 engines, 58 for some I4/V6 engines).

The corrections are calculated from several engine cycles of misfire sample interval data. The correction factors are the average of a selected number of samples. In order to assure the accuracy of these corrections, a tolerance is placed on the incoming values such that an individual correction factor must be repeatable within the tolerance during learning. This is to reduce the possibility of learning bad corrections due to crankshaft velocity disturbances.

Since inaccuracies in the wheel tooth spacing can produce a false indication of misfire, the misfire monitor is not active until the corrections are learned. Two methods of learning profile correction are used:

- Neutral Profile Correction and Non Volatile Memory
- Customer Drive Cycle for Profile Correction (60-40 MPH Deceleration)

Neutral Profile Correction and Non-Volatile Memory

Neutral profile learning is used at End of Line to learn profile correction via a series of one or more neutral engine rpm throttle snaps. This allows the Misfire Monitor to be activated at the Assembly Plant. A Test Tool command is required to enable this method of learning, so this method will only be performed by a Plant or Service technician. Learning profile correction factors at high-speed (3,000 rpm) neutral conditions versus during 60-40 mph decels optimizes correction factors for higher rpms where they are most needed and eliminates driveline/transmission and road noise effects. This improves signal to noise characteristics which means improved detection capability.

The profile correction factors learned at the Assembly Plant are stored into non-volatile memory. This eliminates the need for specific customer drive cycles. However, misfire profiles may need to be relearned in the Service Bay using a service procedure if major engine work is done or the PCM is replaced. (Re-learning is not required for a reflash.)

On selected vehicles, the neutral profile correction strategy is the only method used for profile correction learning. In the event of a loss of non-volatile memory contents (new PCM installed), the correction factors are lost and must be relearned. DTC P0315 is set until the misfire profile is relearned using a scan tool procedure.

The neutral profile correction strategy is available on most gasoline engine vehicles. It is not available on HEV and diesel engine vehicles.

Customer Drive Cycle for Profile Correction (60-40 MPH Deceleration)

This method was the traditional method for profile correction learning until the introduction of Neutral Profile Correction. It is now only used as a backup method.

To prevent any fueling or combustion differences from affecting the correction factors, learning is done during deceleration fuel shut off (DFSO). This can be done during closed throttle, non-braking, defueled decelerations in the 97 to 64 km/h (60 to 40 MPH) range after exceeding 97 km/h (60 MPH) (likely to correspond to a freeway exit

ED_002078G_00001322-00040

condition). In order to minimize the learning time for the correction factors, a more aggressive DFSO strategy may be used when the conditions for learning are present. The corrections are typically learned in a single 97 to 64 km/h (60 to 40 MPH) deceleration, but may take up to 3 such decelerations or a higher number of shorter decelerations. If the software is unable to learn a profile after three, 97 to 64 km/h (60 to 40 MPH) deceleration cycles, DTC P0315 is set.

Misfire Monitor Operation:	
DTCs	P0300 to P0310 (general and specific cylinder misfire) P1336 (noisy crank sensor, no cam/crank synchronization) P0315 (unable to learn profile) P0316 (misfire during first 1,000 revs after start-up) P0313 (misfire detected with low fuel level)
Monitor execution	Continuous, misfire rate calculated every 200 or 1000 revs
Monitor Sequence	None
Sensors OK	CKP, CMP, MAF, ECT/CHT
Monitoring Duration	Entire driving cycle (see disablement conditions below)

Typical misfire monitor entry conditions:		
Entry condition	Minimum	Maximum
Time since engine start-up	0 seconds	0 seconds
Engine Coolant Temperature	20 °F	250 °F
RPM Range (Full-Range Misfire certified, with 2 rev delay)	2 revs after exceeding 150 rpm below “drive” idle rpm	redline on tach or fuel cutoff
Profile correction factors learned in NVRAM	Yes	
Fuel tank level	15%	

Typical misfire temporary disablement conditions:
Temporary disablement conditions:
Closed throttle decel (negative torque, engine being driven) > -100 ft lbs
Fuel shut-off due to vehicle-speed limiting or engine-rpm limiting mode
High rate of change of torque (heavy throttle tip-in or tip out) > -450 deg/sec or 250 deg/sec ; > -200 ft lbs/sec or > 250 ft lbs/sec
Rough Road conditions present

Typical misfire monitor malfunction thresholds:
Type A (catalyst damaging misfire rate): misfire rate is an rpm/load table ranging from 40% at idle to 4% at high rpm and loads
Type B (emission threshold rate): 0.9% to 1.5%

J1979 Misfire Mode $06 Data			
Monitor ID	Test ID	Description	
A1	$80	Total engine misfire and catalyst damage misfire rate (updated every 200 revolutions) (P030x)	percent
A1	$81	Total engine misfire and emission threshold misfire rate (updated every 1,000 revolutions) (P030x)	percent
A1	$82	Highest catalyst-damage misfire and catalyst damage threshold misfire rate (updated when DTC set or clears) (P030x)	percent
A1	$83	Highest emission-threshold misfire and emission threshold misfire rate (updated when DTC set or clears) (P030x)	percent
A1	$84	Inferred catalyst mid-bed temperature (P030x)	^{o}C
A2 – AD	$0B	EWMA misfire counts for last 10 driving cycles (P030x)	events
A2 – AD	$0C	Misfire counts for last/current driving cycle (P030x)	events
A2 – AD	$80	Cylinder X misfire rate and catalyst damage misfire rate (updated every 200 revolutions) (P030x)	percent
A2 – AD	$81	Cylinder X misfire rate and emission threshold misfire rate (updated every 1,000 revolutions) (P030x)	percent

ED_002078G_00001322-00042

The profile learning operation includes DTC P0315 if profile correction factors are not learned. On selected vehicles, this code is set immediately after a new PCM is installed until the scan tool procedure for Neutral Profile Correction is completed. On all other vehicles, this code is set if profile learning does not complete during the Customer Drive Cycle for Profile Correction.

Profile Correction Operation	
DTCs	P0315 - unable to learn profile in three 60 to 40 mph decels
Monitor Execution	Once per profile learning sequence.
Monitor Sequence:	Profile must be learned before misfire monitor is active.
Sensors OK:	CKP, CMP, CKP/CMP in synch
Monitoring Duration;	10 cumulative seconds in conditions (a maximum of three 60-40 mph defueled decels)

Typical profile learning entry conditions (Customer drive cycle):		
Entry condition	Minimum	Maximum
Engine in decel-fuel cutout mode for 4 engine cycles		
Brakes applied (Brake On/Off Switch)	No	No
Engine RPM	1300 rpm	3700 rpm
Change in RPM		600 rpm/background loop
Vehicle Speed	30 mph	75 mph
Learning tolerance		1%

Typical profile learning entry conditions (Assembly Plant or Service Bay):		
Entry condition	Minimum	Maximum
Engine in decel-fuel cutout mode for 4 engine cycles		
Park/Neutral gear		
Engine RPM	2000 rpm	3000 rpm
Learning tolerance		1%

ED_002078G_00001322-00043

EVAP System Monitor - 0.040” dia. Vacuum Leak Check

Vehicles that meet enhanced evaporative requirements utilize a vacuum-based evaporative system integrity check. The evap system integrity check uses a Fuel Tank Pressure Transducer (FTPT), a Canister Vent Solenoid (CVS) and Fuel Level Input (FLI) along with a Canister Purge Valve (CPV) to find 0.040” diameter or larger evap system leaks. Federal vehicles can utilize a 0.040" leak check rather than the 0.020" leak check required for California vehicles. Additionally, some programs may elect to run a 0.090" / 0.020" detection configuration and turn the 0.040" leak test off as provided for in the regulations.

In the case of heavy duty gasoline engines (> 14,000 lbs), the regulations require 0.150" leak detection only. Heavy Duty vehicle will not set a P0442 (0.040” leak). They will set a P0455 during the initial vacuum pulldown phase to meet the 0.0150” leak detection requirement.

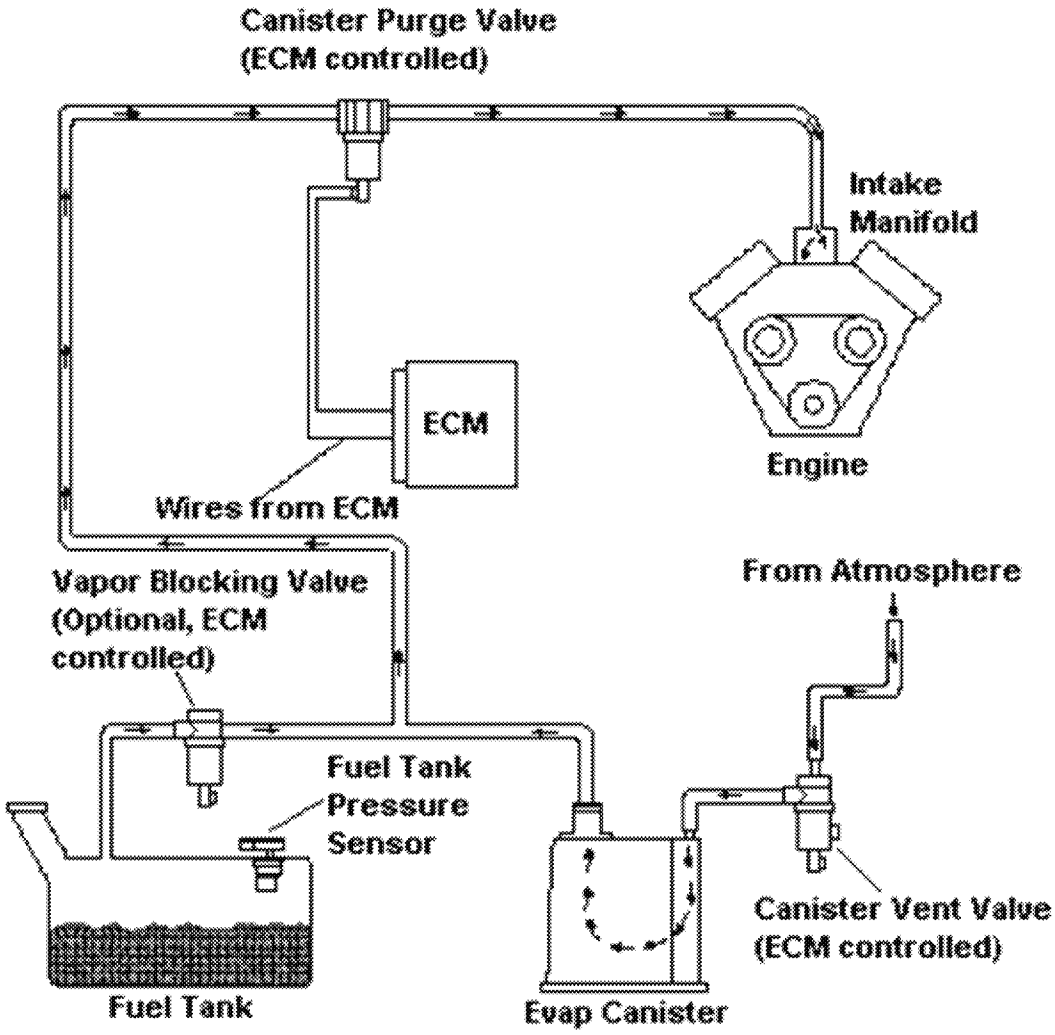

The evap system integrity test is done under conditions that minimize vapor generation and fuel tank pressure changes due to fuel slosh since these could result in false MIL illumination. The check is run after a 6 hour cold engine soak (engine-off timer), during steady highway speeds at ambient air temperatures (inferred by IAT) between 40 and 100 °F.

A check for refueling events is done at engine start. A refuel flag is set in KAM if the fuel level at start-up is at least 20% of total tank capacity greater than fuel fill at engine-off. It stays set until the evap monitor completes Phase 0 of the test as described below. Note that on some vehicles, a refueling check may also be done continuously, with the engine running to detect refueling events that occur when the driver does not turn off the vehicle while refueling (in-flight refueling).

As a precursor to running the evap system integrity, a conditioning test is carried out to ensure that there is no excessive vacuum condition (P1450). Excessive vacuum can cause damage to the evap system if the CVS becomes corked closed during evap testing. Basically, with the purge flow commanded off, the CVS is closed and a vacuum growth or a stagnant vacuum is monitored over time. If the vacuum grows or does not dissipate then P1450 DTC sets and the evap integrity check is prohibited from running. Hence, P1450 DTC can only set outside the monitor, not inside it.

NOTE: If the 0.04" leak check monitor is ready to run but the excessive vacuum check test has not run, the leak monitor will force the excessive check to run.

The evap system integrity test is done in four phases.

(Phase 0 - initial vacuum pulldown):

First, the Canister Vent Solenoid is closed to seal the entire evap system, and then the Canister Purge Valve (CPV) is opened to pull an 8" H_2O vacuum. If the initial vacuum could not be achieved, a large system leak is indicated (P0455). This could be caused by a fuel cap that was not installed properly, a stuck open Capless Fuel Fill valve, a large hole, an overfilled fuel tank, disconnected/kinked vapor lines, a Canister Vent Solenoid that is stuck open, a CPV that is stuck closed, or a disconnected/blocked vapor line between the CPV and the FTPT.

Note: 2009 Model Year and beyond implementations require 2 or 3 gross leak failures in-a-row prior to setting a P0455 DTC.

On some vehicles, if the initial vacuum could not be achieved after a refueling event, a gross leak, fuel cap off (P0457) is indicated and the recorded minimum fuel tank pressure during pulldown is stored in KAM. A "Check Fuel Cap" light may also be illuminated. On vehicles with capless fuel fill, a message instructing the customer to check the Capless Fuel Fill valve will appear in conjunction with a P0457 DTC. Depending on calibration, the MIL may be illuminated in two or three trips with a P0457 failure.

If a P0455, P0457, or P1450 code is generated, the evap test does not continue with subsequent phases of the small leak check, phases 1-4.

Note: Not all vehicles will have the P0457 test or the Check Fuel Cap light implemented. These vehicles will continue to generate only a P0455. After the customer properly secures the fuel cap, the P0457, Check Fuel Cap and/or MIL will be cleared as soon as normal purging vacuum exceeds the P0457 vacuum level stored in KAM.

Phase 1 - Vacuum stabilization

If the target vacuum is achieved, the CPV is closed and vacuum is allowed to stabilize for a fixed time. If the pressure in the tank immediately rises, the stabilization time is bypassed and Phase 2 of the test is entered.

For the 2010 MY, a new PI controller was implemented to control the vacuum pull exactly to target. By doing so, the phase one stabilization time has been reduced.

Phase 2 - Vacuum hold and decay

Next, the vacuum is held for a calibrated time and the vacuum level is again recorded at the end of this time period. The starting and ending vacuum levels are checked to determine if the change in vacuum exceeds the vacuum bleed up criteria. Fuel Level Input and ambient air temperature are used to adjust the vacuum bleed-up criteria for the appropriate fuel tank vapor volume. Steady state conditions must be maintained throughout this bleed up portion of the test. The monitor will abort if there is an excessive change in load, fuel tank pressure or fuel level input since these are all indicators of impending or actual fuel slosh. If the monitor aborts, it will attempt to run again (up to 20 or more times). If the vacuum bleed-up criteria is not exceeded, the small leak test is considered a pass. If the vacuum bleed-up criteria is exceeded on three successive monitoring events, a 0.040 " dia. leak is likely and a final vapor generation check is done to verify the leak, phases 3-4. Excessive vapor generation can cause a false MIL.

Phase 3 - Vacuum release

This stage of the vapor generation check is done by opening the CVS and releasing any vacuum. The system will remain vented to atmosphere for approximately 30 - 60 seconds and then proceed to phase 4.

Phase 4 - Vapor generation

This stage of the vapor generation check is done by closing the CVS and monitoring the pressure rise in the evaporative system. If the pressure rise due to vapor generation is below the threshold limit for absolute pressure and change in pressure, a P0442 DTC is stored.

0.040" Evaporative System Monitor

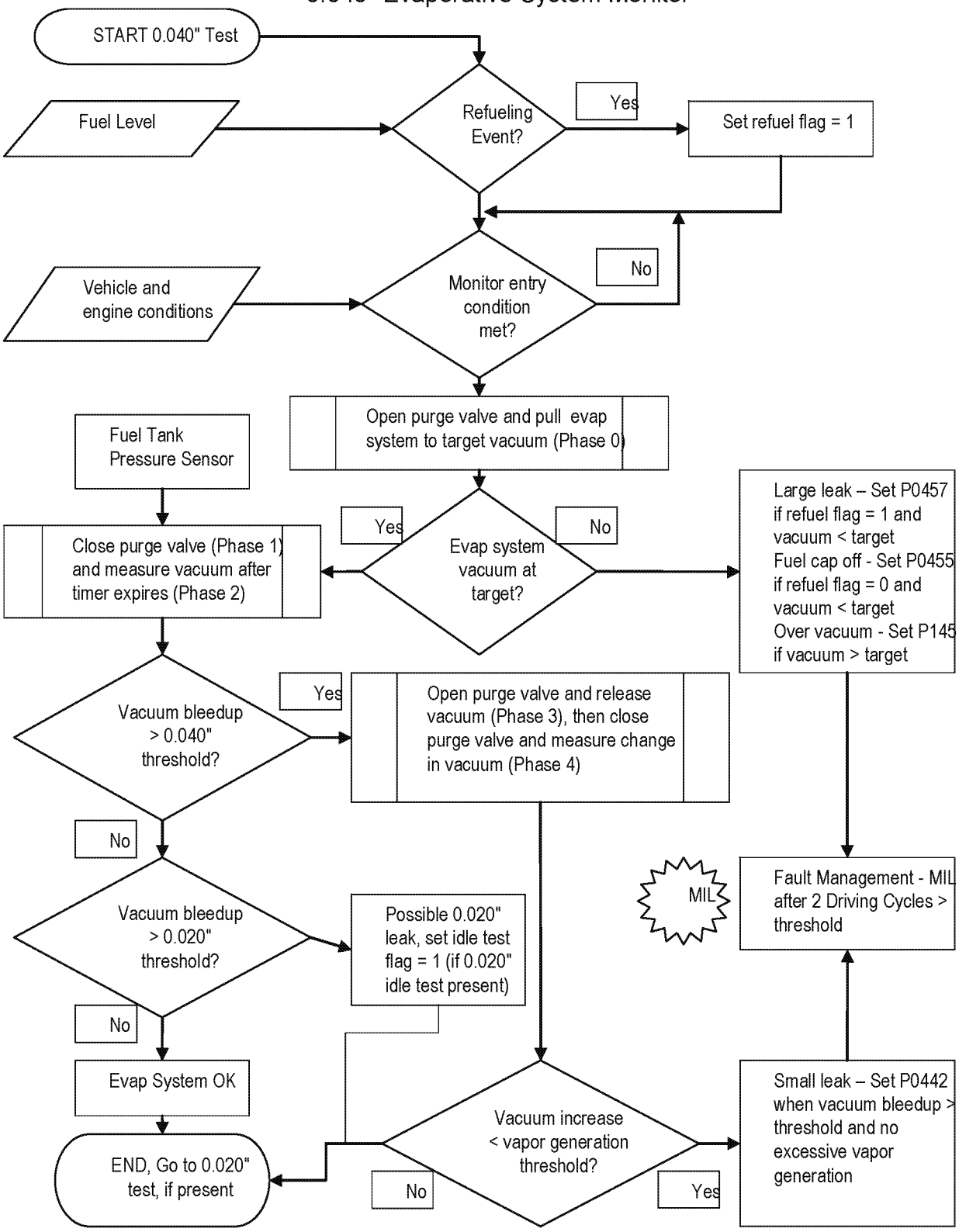

ED_002078G_00001322-00047

0.040" EVAP Monitor Operation:	
DTCs	P0455 (gross leak), P1450 (excessive vacuum), P0457 (gross leak, cap off), P0442 (0.040" leak)
Monitor execution	once per driving cycle
Monitor Sequence	HO2S monitor completed and OK
Sensors/Components OK	MAF, IAT, VSS, ECT, CKP, TP, FTP, CPV, CVS
Monitoring Duration	360 seconds (see disablement conditions below)

Typical 0.040" EVAP monitor entry conditions, Phases 0 through 4:		
Entry condition	Minimum	Maximum
Engine off (soak) time time OR ECT at start – IAT at start <= 12 °F	4 - 6 hours	
Time since engine start-up	330 seconds	1800 to 2700 seconds
Intake Air Temp	40 °F	95 - 100 °F
BARO (<8,000 ft altitude)	22.0 " Hg	
Engine Load	20%	70%
Vehicle Speed	40 mph	90 mph
Purge Duty Cycle	75%	100%
Purge Flow	0.05 lbm/min	0.10 lbm/min
Fuel Fill Level	15%	85%
Fuel Tank Pressure Range	- 17 H_2O	1.5 H_2O
Battery Voltage	11 volts	18 volts
Clean Canister		

Typical 0.040" EVAP abort (fuel slosh) conditions for Phase 2:
Change in load: > 30%
Change in tank pressure: > 1 " H_2O
Change in fuel fill level: > 15%
Number of aborts: > 255
Vehicle Accel > 1 mph / sec

ED_002078G_00001322-00048

Typical 0.040 EVAP monitor malfunction thresholds:
P1450 (Excessive vacuum): < -4.0 in H_2O delta vacuum from time that CVS is closed, or > -4. in H_2O stagnant vapor over a 10 second evaluation time.
P0455 (Gross leak): > -8.0 in H_2O over a 30 second evaluation time.
P0457 (Gross leak, cap off): > -8.0 in H_2O over a 30 second evaluation time after a refueling event.
P0442 (0.040" leak): > 2.5 in H_2O bleed-up over a 15 second evaluation time at 75% fuel fill. (Note: bleed-up and evaluation times vary as a function of fuel fill level and ambient air temperature)
P0442 vapor generation limit: < 2.5 in H_2O over a 120 second evaluation time

ED_002078G_00001322-00049

J1979 Evaporative System Mode $06 Data			
Test ID	Comp ID	Description	Units
$3A	$80	Phase 0 end pressure result and test limits (data for P1450 – excessive vacuum)	Pa
$3A	$81	Phase 4 vapor generation minimum change in pressure and test limits (data for P1450, CPV stuck open)	Pa
$3A	$82	Phase 0 end pressure result and test limits (data for P0455/P0457 – gross leak/cap off)	Pa
$3B	$80	Phase 2 0.040" cruise leak check vacuum bleed-up and test limits (data for P0442 – 0.040" leak)	Pa
Note: Default values (0.0 Pa) will be displayed for all the above TIDs if the evap monitor has never completed. Each TID is associated with a particular DTC. The TID for the appropriate DTC will be updated based on the current or last driving cycle, default values will be displayed for any phases that have not completed.			

ED_002078G_00001322-00050

EVAP System Monitor - 0.020” dia. Engine Off Natural Vacuum

Some vehicles that meet enhanced evaporative requirements utilize an engine off natural vacuum (EONV) evaporative system integrity check that tests for 0.020" dia. leaks while the engine is off and the ignition key is off. The evap system integrity check uses a Fuel Tank Pressure Transducer (FTPT), a Canister Vent Solenoid (CVS) and Fuel Level Input (FLI) to find 0.020” diameter evap system leaks.

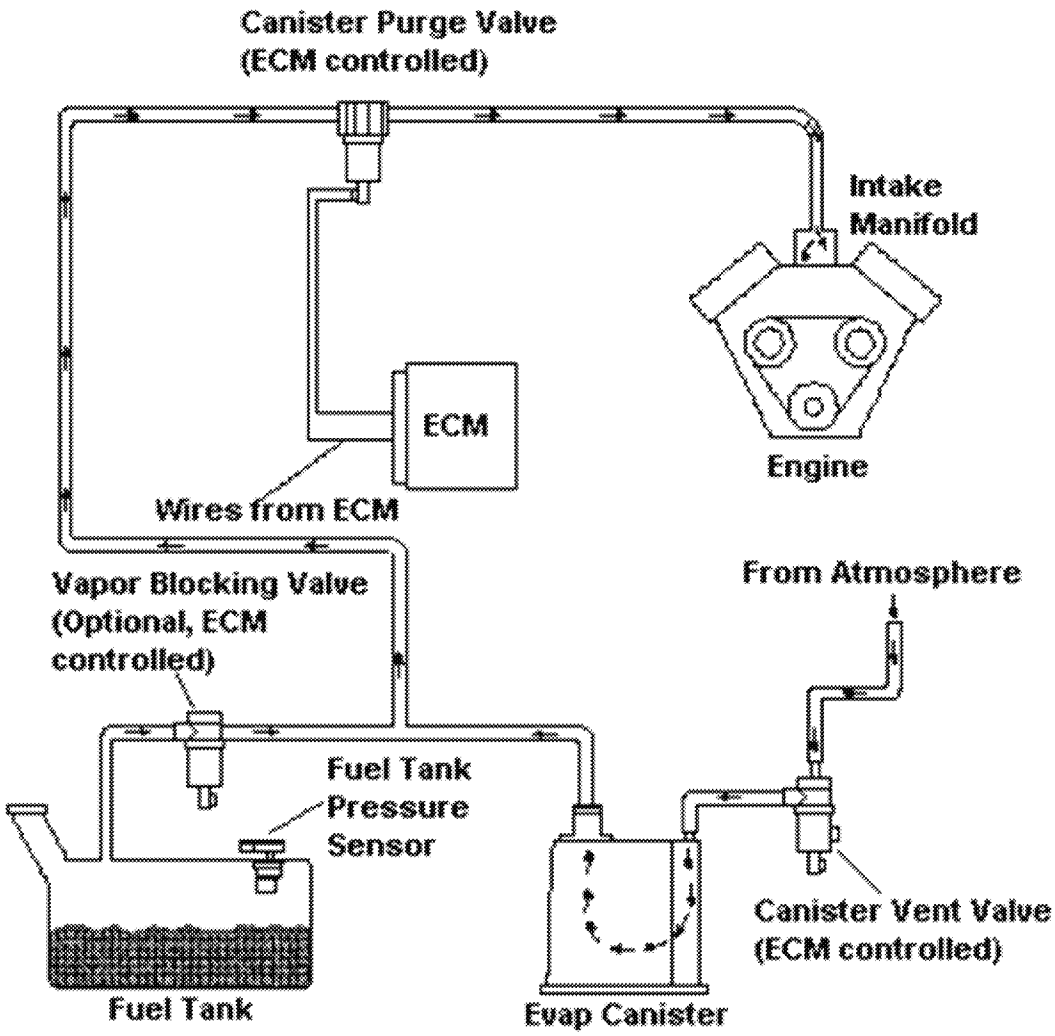

The Ideal Gas Law (PV=mRT) defines a proportional relationship between the Pressure and Temperature of a gas that is contained in a fixed Volume. Therefore, if a sealed container experiences a drop in temperature it will also experience a drop in pressure. In a vehicle, this happens when a sealed evaporative system cools after the engine has been run, or if it experiences a drop in temperature due to external environmental effects. This natural vacuum can be used to perform the leak check, hence the name Engine Off Natural Vacuum (EONV). Condensation of fuel vapor during cooling can add to the vacuum produced by the Ideal Gas Law.

In contrast to the vacuum produced by drops in temperature, an additional factor can be heat transfer to the evaporative system from the exhaust system immediately after key-off. Heat transfer from the exhaust at key-off aided by fuel vaporization may produce a positive pressure shortly after key-off, which can also be used for leak detection.

The EONV system is used to perform only the 0.020" leak check while 0.040" dia. leaks and larger (including fuel cap off) will continue to be detected by the conventional vacuum leak monitor performed during engine running conditions.

ED_002078G_00001322-00051

Ford's EONV implementation for California and Green State applications uses a separate, stay-alive microprocessor in the PCM to process the required inputs and outputs while the rest of the PCM is not powered and the ignition key is off. The stay-alive microprocessor draws substantially less battery current than the PCM; therefore, powering only the stay-alive micro during engine-off conditions extends vehicle battery life and allows the EONV monitor to run more often. The PCM is the only difference between California/Green State and Federal vehicles.

Inputs to EONV Microprocessor

- Fuel Tank Pressure
- Battery Voltage

Outputs from EONV Microprocessor

- Canister Vent Solenoid
- 0.020" leak data

MY2005 EONV System Hardware Design

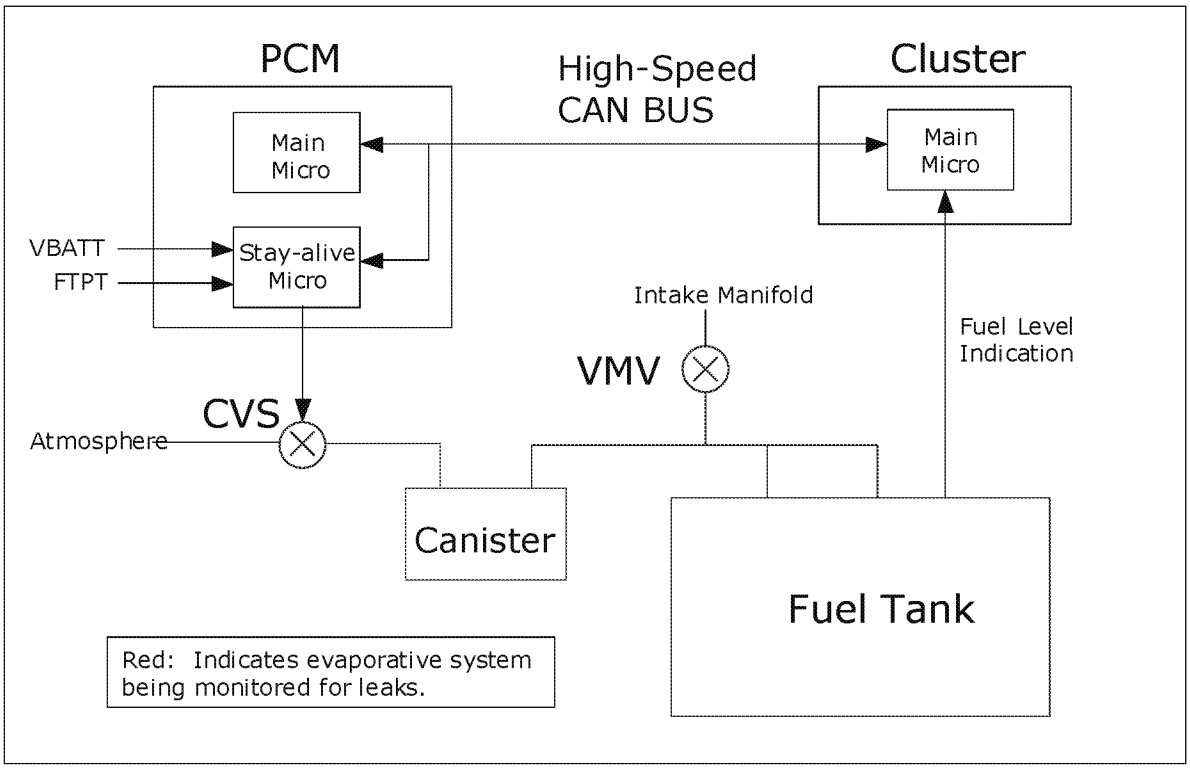

For new 2009 MY and beyond applications, EONV implementation is done in the main microprocessor. The main micro stays alive at key off in a special low power mode to run the EONV test. There is no longer a special standalone chip for EONV. The feature is called EONVM (EONV in the Main).

ED_002078G_00001322-00052

Phase 0- Stabilization Phase

The purpose of the Stabilization Phase is to allow tank pressure to stabilize after vehicle shutdown (i.e. ignition in the OFF position). During this phase, the Canister Vent Solenoid (CVS) is open, thus allowing the pressure in the fuel tank to stabilize at atmospheric pressure. The duration of the Stabilization Phase is approximately 2 minutes. A fuel volatility check is performed just prior to its completion.

The fuel volatility check measures tank pressure and will abort the test if more than 1.5 "H_20 is observed in the tank. Because the CVS is open during this test, it would take a good deal of fuel vaporization to produce this level of pressure on a vented system. As an example, this condition may occur when a customer performs a long drive with highly volatile, winter fuel on a 100-deg F day. Note: This feature is not used in most applications.

If the fuel volatility check passes, a Fuel Tank Pressure Transducer (FTPT) offset correction factor is learned as the last step of this phase. This correction factor is applied to pressure measurements in the next phase to improve FTPT accuracy.

Phase 1 – First Test Phase

At the start of this phase, the CVS is commanded shut, thus sealing up the entire evaporative system. If the system is sufficiently sealed, a positive pressure or vacuum will occur during depending on whether the tank temperature change is positive or negative. Other effects such as fuel vaporization and condensation within the fuel tank will also determine the polarity of the pressure. As the leak size increases, the ability to develop a positive pressure or vacuum diminishes. With a 0.020" leak, there may be no measurable positive pressure or vacuum at all depending on test conditions.

During this phase, tank pressure is continuously measured and compared to calibrated detection thresholds (both positive pressure and vacuum) that are based on fuel level and ambient temperature. If either the pressure or vacuum threshold is exceeded, the test will be considered a pass, and the monitor will proceed to "Phase 4 – Test Complete". If a positive plateau occurs in tank pressure without exceeding the pass threshold, the monitor will progress to "Phase 2 – Transition Phase". If a vacuum occurs, the monitor will remain in Phase 1 until the test times out after 45 minutes have elapsed since key-off, or the pass threshold for vacuum is exceeded. In either case, the monitor will transition to "Phase 4 – Test Complete."

Phase 2- Transition Phase

This phase will occur if a positive pressure plateau occurred in Phase 1 without the positive pass threshold being exceeded. At the start of the Transition Phase, the CVS is opened and the evaporative system is allowed to stabilize. The Transition Phase lasts approximately 2 minutes, and a new FTPT offset correction is learned just prior to its completion. The monitor will then progress to "Phase 3 – Second Test Phase".

Note: This phase is termed the Transition Phase because there is a chance that a vacuum will be seen in the next phase if a positive pressure plateau occurred in Phase 1. The reason for this is that a positive plateau may be coincident with vapor temperature starting to decrease, which is favorable for developing a vacuum in the fuel tank. This is not always the case, and it is possible to see a positive pressure in Phase 3 as well.

Phase 3- Second Test Phase

Upon completion of the Transition Phase, the CVS is commanded shut and the FTPT is monitored for any positive pressure or vacuum that develops. As with "Phase 1 – First Test Phase", if either the positive pressure or vacuum pass threshold is exceeded, the test is considered a pass and proceeds to "Phase 4 – Test Complete". Also, if the test times out after 45 minutes have elapsed since key-off, the test will be considered a fail (i.e. leak detected) and will also proceed to "Phase 4 – Test Complete".

Phase 4 – Test Complete

In this phase, the EONV test is considered complete for this key-off cycle. The resultant peak pressure and peak vacuum are stored along with total test time and other information. This information is sent to the main microprocessor via CAN at the next engine start. During this phase, the CVS is commanded open and the electrical components performing the EONV test are shutdown to prevent any further power consumption.

Test Aborts

During the EONV test, several parameters are monitored to abort the EONV test under certain conditions. The primary abort conditions are instantaneous changes in tank pressure and fuel level. They are used to detect refuel events and rapidly open the CVS upon detection of them. A list of abort conditions is given below.

Post-2009 Model Year Fault Filtering

To increase the IUMP (rate-based) numerator once per monitor completion, the fault filtering logic for EONV was revised. The logic incorporates several important CARB requirements. These are:

- Fast Initial Response (FIR): The first 4 tests after a battery disconnect or code clear will process unfiltered data to quickly indicate a fault. The FIR will use a 2-trip MIL. This will help the service technician determine that a fault has been fixed.

- Step-change Logic (SCL): The logic will detect an abrupt change from a no-fault condition to a fault condition. The SCL will be active after the 4th EONV test and will also use a 2-trip MIL. This will illuminate the MIL when a fault is instantaneously induced.

- Normal EWMA (NORM): This is the normal mode of operation and uses an Exponentially Weighted Moving Average (EWMA) to filter the EONV test data. It is employed after the 4th EONV test and will illuminate a MIL during the drive cycle where the EWMA value exceeds the fault threshold. (1 trip MIL). The recommended filter/time constant will produce filtering comparable to a previously-described 5-test average.

If there is a failure using any of the fault filtering logic shown above, a P0456 DTC will be set.

ED_002078G_00001322-00054

Phases of EONV Test

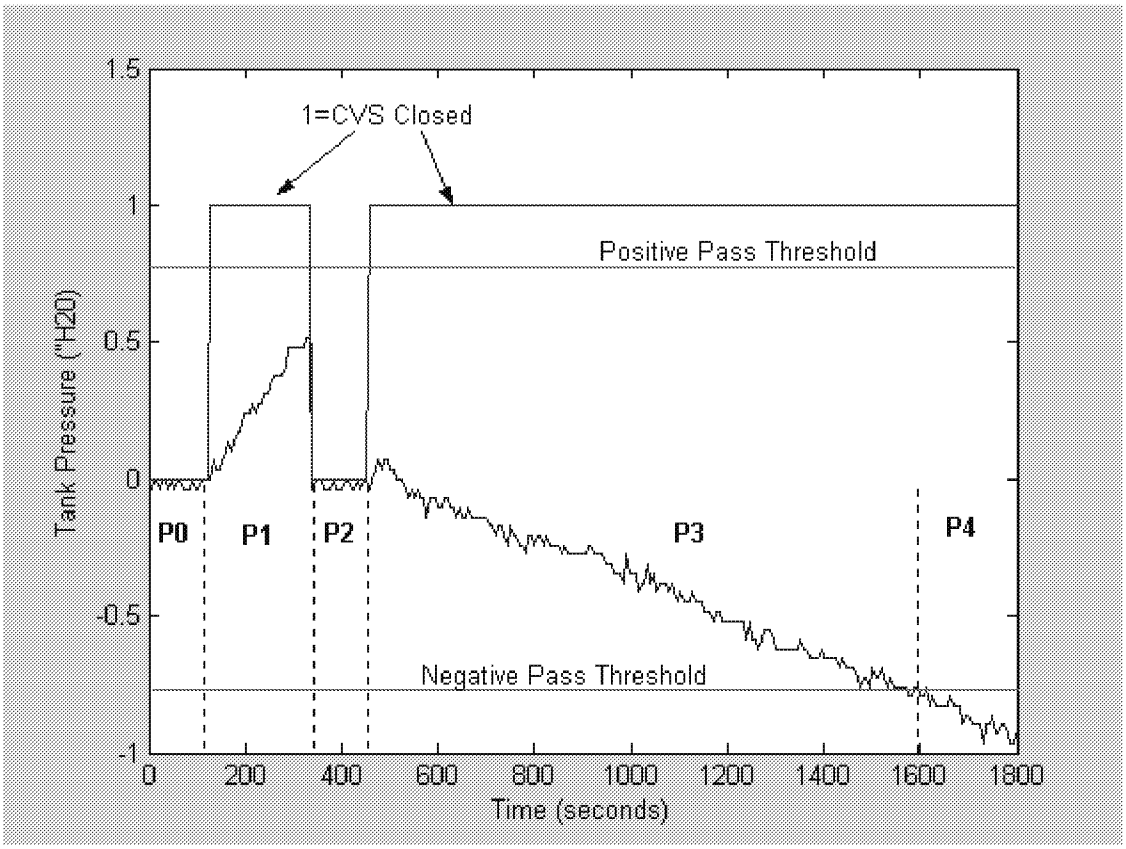

P0 = Phase 0, Stabilization Phase – With CVS open, Tank Pressure is allowed to stabilize. A fuel volatility test is performed and FTPT offset correction is learned if volatility test passes.

P1 = Phase 1, First Test Phase – CVS is closed and pressure peaks below positive pass threshold sending test to Phase 2. If the positive pass threshold were exceeded, the test would have completed and a pass would have been recorded.

P2 = Phase 2, Transition Phase – CVS is opened and a second stabilization phase occurs. A second FTPT offset is learned during this time.

P3 = Phase 3, Second Test Phase – CVS is closed again and a vacuum develops that eventually exceeds the negative pass threshold. When this occurs, the test proceeds to Phase 4, test complete.

P4 = Phase 4, Test Compete – CVS opens (not pictured in above data file), results are recorded, and stay-alive electronics shutdown.

ED_002078G_00001322-00055

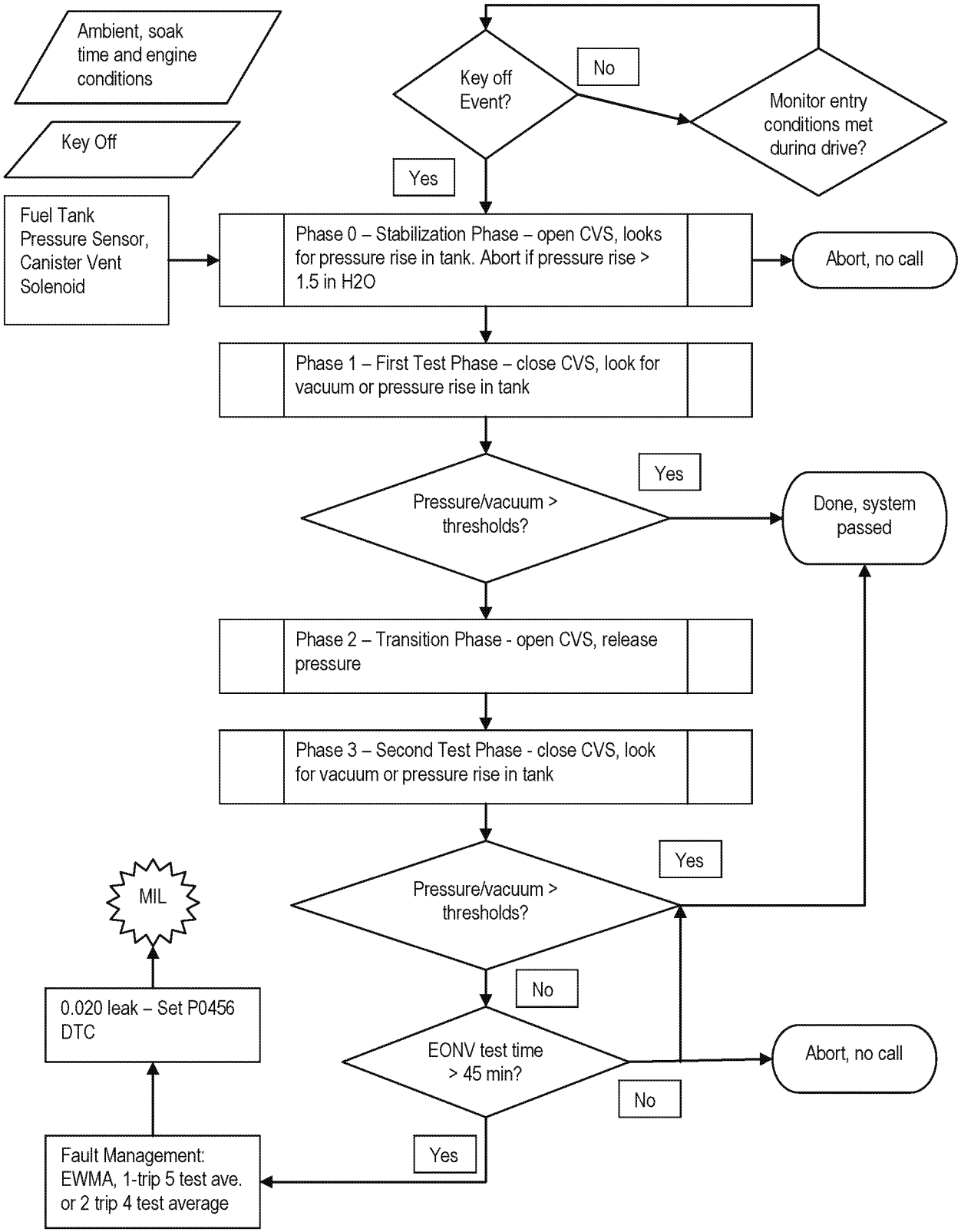
Ambient, soak time and engine conditions
Key Off
Fuel Tank Pressure Sensor, Canister Vent Solenoid
Key off Event?
No
Monitor entry conditions met during drive?
Yes
Phase 0 – Stabilization Phase – open CVS, looks for pressure rise in tank. Abort if pressure rise > 1.5 in H2O
Abort, no call
Phase 1 – First Test Phase – close CVS, look for vacuum or pressure rise in tank
Pressure/vacuum > thresholds?
Yes
Done, system passed
Phase 2 – Transition Phase - open CVS, release pressure
Phase 3 – Second Test Phase - close CVS, look for vacuum or pressure rise in tank
Pressure/vacuum > thresholds?
Yes
MIL
No
0.020 leak – Set P0456 DTC
EONV test time > 45 min?
Abort, no call
No
Yes
Fault Management: EWMA, 1-trip 5 test ave. or 2 trip 4 test average

0.020" EONV EVAP Monitor Operation:	
DTCs	P0456 (0.020" leak) P260F (Evaporative System Monitoring Processor Performance)
Monitor execution	Once per key-off when entry conditions are met during drive. Monitor will run up to 2 times per day, or 90 cumulative minutes per day (whichever comes first)
Monitor Sequence	none
Sensors/Components OK	EONV Processor, Canister Vent Solenoid, Fuel Tank Pressure Sensor, Fuel Level Input, Vapor Management Valve, CAN communication link
Monitoring Duration	45 minutes in key-off state if fault present. Tests will likely complete quicker if no fault is present.

Typical 0.020" EONV EVAP monitor entry conditions:		
Entry conditions to allow EONV test (prior to key off)	Minimum	Maximum
Engine off (soak) time	3.5 - 6 hours	
OR		
Inferred soak criteria met: - (ECT at start – IAT at start)		12 °F F
Inferred soak criteria met – ECT at start	35 °F F	105 °F F
Inferred soak criteria met - minimum engine off soak time	0 sec	
Time since engine start-up to allow EONV test	20 minutes	90 minutes
Ambient Temperature at start-up	40 °F	95 °F
Battery Voltage to start EONV test	11 volts	
Number of completed EONV tests in 24hr cycle		6
Cumulative test time in 24hr cycle		90 minutes
Fuel level	15%	85%
ECU time since power-up to allow EONV test	180 seconds	
Flex fuel inference complete	Learned	
BARO (<8,000 ft altitude)	22.0 " Hg	
Summation of air mass of the combustion engine since start ensures that vehicle has been operated off idle (function of ambient temperature).	7500 to 15000 lbm/min	
Ratio of drive time to (drive + soak) time. (This allows for the driver to key-off for a short time without losing the initial soak condition.)	0.8	

ED_002078G_00001322-00057

Typical 0.020" EONV EVAP key-off abort conditions:
Tank pressure at key-off > 1.5" H_20 during stabilization phase (indicates excessive vapor)
Tank pressure not stabilized for tank pressure offset determination
Rapid change in tank pressure > 0.5"H_20 (used for refuel/slosh detection)
Rapid change in fuel level > 5% (used for refuel/slosh detection)
Battery voltage < 11 Volts
Rapid change in battery voltage > 1 Volt
Loss of CAN network (only for standalone satellite micro applications)
Canister Vent Solenoid fault detected
Driver turns key-on

Typical 0.020 EONV EVAP monitor malfunction thresholds:
P0456 (0.020" leak): < 0.75 in H_2O pressure build and < 0.50 in H_2O vacuum build over a 45 minute maximum evaluation time Note: EONV monitor can be calibrated to illuminate the MIL after two malfunctions (an average of four key-off EONV tests, eight runs in all) or after a single malfunction (an average of five key-off EONV tests, five runs in all), or using EWMA with Fast Initial Response and Step Change Logic. Most new 2006 MY and later vehicles will use the five-run approach, most new 2009 MY and later use the EWMA approach.

J1979 EONV EVAP monitor Mode $06 Data			
Monitor ID	Comp ID	Description	Units
$3C	$81	EONV Positive Pressure Test Result and Limits (data for P0456)	Pa
$3C	$82	EONV Negative Pressure (Vacuum) Test Result and Limits(data for P0456)	Pa
$3C	$83	Normalized Average of Multiple EONV Tests Results and Limits (where 0 = pass, 1 = fail) (data for P0456)	unitless
Note: Default values (0.0) will be displayed for all the above TIDs if the evap monitor has never completed. The appropriate TID will be updated based on the current or last driving cycle, default values will be displayed for any phases that have not completed.			

ED_002078G_00001322-00058

EVAP System Monitor Component Checks

Additional malfunctions that are identified as part of the evaporative system integrity check are as follows:

The **Canister Purge Valve (CPV)** output circuit is checked for opens and shorts (P0443)

Note that a stuck closed CPV generates a P0455, a leaking or stuck open CPV generates a P1450.

Canister Purge Valve Check Operation:	
DTCs	P0443 – Evaporative Emission System Purge Control Valve "A" Circuit
Monitor execution	continuous
Monitor Sequence	None
Sensors OK	not applicable
Monitoring Duration	5 seconds to obtain smart driver status

Typical Canister Purge Valve check malfunction thresholds:
P0443 (CPV): open/shorted at 0 or 100% duty cycle

The **Canister Vent Solenoid** output circuit is checked for opens and shorts (P0446), a stuck closed CVS generates a P1450, a leaking or stuck open CVS generates a P0455.

Canister Vent Solenoid Check Operation:	
DTCs	P0446 – Canister Vent Solenoid Circuit
Monitor execution	continuous
Monitor Sequence	None
Sensors OK	not applicable
Monitoring Duration	5 seconds to obtain smart driver status

Typical Canister Vent Solenoid check malfunction thresholds:
P0446 (Canister Vent Solenoid Circuit): open/shorted

The **Evap Switching Valve** (EVAPSV) output circuit is checked for opens and shorts (P2418).

Evap Switching Valve Check Operation:	
DTCs	P2418 - Evap Switching Valve Circuit
Monitor execution	continuous
Monitor Sequence	None
Sensors OK	not applicable
Monitoring Duration	5 seconds to obtain smart driver status

Evap Switching Valve check malfunction thresholds:
P2418 (Evap Switching Valve Circuit): open/shorted

The **Fuel Tank Pressure Sensor** input circuit is checked for out of range values (P0452 short, P0453 open), noisy readings (P0454 noisy) and an offset (P0451 offset).

Note that an open power input circuit or stuck check valve generates a P1450.

Fuel Tank Pressure Sensor Transfer Function		
FTP volts = [Vref * (0.14167 * Tank Pressure) + 2.6250] / 5.00		
Volts	A/D Counts in PCM	Fuel Tank Pressure, Inches H_2O
0.100	20	-17.82
0.500	102	-15.0
1.208	247	-10.0
2.625	464	0
3.475.	712	6.0
4.750	973	15.0
4.90	1004	16.06

Fuel Tank Pressure Sensor Check Operation:	
DTCs	P0452 – Fuel Tank Pressure Sensor Circuit Low P0453 – Fuel Tank Pressure Sensor Circuit High P0454 – Fuel Tank Pressure Sensor Intermittent/Erratic (noisy)
Monitor execution	continuous
Monitor Sequence	None
Sensors OK	not applicable
Monitoring Duration	5 seconds for electrical malfunctions, 10 seconds for noisy sensor test

Typical Fuel Tank Pressure Sensor check malfunction thresholds:
P0452 (Fuel Tank Pressure Sensor Circuit Low): < -17.82 in H_2O
P0453 (Fuel Tank Pressure Sensor Circuit High): > 16.06 in H_2O
P0454 (Fuel Tank Pressure Sensor Circuit Noisy): > open circuit, short circuit or > 4 in H_2O change between samples, sampled every 100 msec

Fuel Tank Pressures Sensor Offset Check Operation	
DTCs	P0451 – Fuel Tank Pressure Sensor Range/Performance (offset)
Monitor execution	once per driving cycle
Monitor Sequence	No P0443 or P1450 DTCs
Sensors OK	not applicable
Monitoring Duration	< 1 second

Typical Fuel Tank Pressure Sensor Offset Check Entry Conditions:		
Entry condition	Minimum	Maximum
Ignition key on, engine off, engine rpm		0 rpm
Purge Duty Cycle		0%
Engine off (soak) time	4 - 6 hours	
Fuel Tank Pressure Sensor Variation during test		0.5 in H_2O
Battery Voltage	11.0 Volts	

Typical Fuel Tank Pressure Sensor Offset Check Malfunction Thresholds:
Fuel tank pressure at key on, engine off is 0.0 in H_2O +/- 2.0 in H_2O

ED_002078G_00001322-00061

The **Fuel Level Input** is checked for out of range values (opens/ shorts). The FLI input is obtained from the serial data link from the instrument cluster. If the FLI signal is open or shorted, the appropriate DTC is set (P0462 circuit low and P0463 circuit high).

Vehicles with a "saddle tank" (a tank that wraps over the axle) have two fuel level senders. The FLI input is obtained from the serial data link from the instrument cluster. If the FLI signal is open or shorted, the appropriate DTC is set (P2067 circuit low and P2068 circuit high). A "jet pump" pumps fuel from the passive side of the saddle tank to the active side of the saddle tank where the main fuel pump supplies the engine with fuel. This means that the active side of the fuel tank typically has a high fuel level reading because it it constantly filled by the jet pump. For purposes of computing vehicle fuel level, the two FLI readings are averaged together into one signal that represents the combined fuel level.

Finally, the Fuel Level Input is checked for noisy readings. If the FLI input continues to change > 40% between samples, a P0461 DTC is set.

Fuel Level Input Check Operation:	
DTCs	P0461 – Fuel Level Sensor A Circuit Noisy P0462 – Fuel Level Sensor A Circuit Low P0463 – Fuel Level Sensor A Circuit High P2067 – Fuel Level Sensor B Circuit Low P2068 – Fuel Level Sensor B Circuit High
Monitor execution	continuous
Monitor Sequence	None
Sensors OK	not applicable
Monitoring Duration	30 seconds for electrical malfunctions,

Typical Fuel Level Input check malfunction thresholds:
P0460 or P0462 (Fuel Level Input Circuit Low): < 5 ohms (< 1 A/D count)
P0460 or P0463 (Fuel Level Input Circuit High): > 200 ohms (>253 A/D counts)
P0461 (Fuel Level Input Noisy): > 40% change between samples, > 100 occurrences, sampled every 0.100 seconds

The FLI signal is also checked to determine if it is stuck. "Fuel consumed" is continuously calculated based on PCM fuel pulse width summation as a percent of fuel tank capacity. (Fuel consumed and fuel gauge reading range are both stored in KAM and reset after a refueling event or DTC storage.) If the there is an insufficient corresponding change in fuel tank level, a P0460 DTC is set.

Different malfunction criteria are applied based on the range in which the fuel level sensor is stuck.

In the range between 15% and 85%, a 30% difference between fuel consumed and fuel used is typical. The actual value is based on the fuel economy of the vehicle and fuel tank capacity.

In the range below 15%, a 40% difference between fuel consumed and fuel used is typical. The actual value is based on reserve fuel in the fuel tank and the fuel economy of the vehicle.

In the range above 85%, a 60% difference between fuel consumed and fuel used is typical. The actual value is based on the overfill capacity of the fuel tank and the fuel economy of the vehicle. Note that some vehicles can be overfilled by over 6 gallons.

Fuel Level Input Stuck Check Operation:	
DTCs	P0460 – Fuel Level Input Circuit Stuck
Monitor execution	continuous
Monitor Sequence	None
Sensors OK	not applicable
Monitoring Duration	Between 15 and 85%, monitoring can take from100 to 120 miles to complete

Typical Fuel Level Input Stuck check malfunction thresholds:
P0460 (Fuel Level Input Stuck):
Fuel level stuck at greater than 90%: > 60% difference in calculated fuel tank capacity consumed versus change in fuel level input reading
Fuel level stuck at less than 10%: > 30% difference in calculated fuel tank capacity consumed versus change in fuel level input reading
Fuel level stuck between 10% and 90%: > 25% difference in calculated fuel tank capacity consumed versus change in fuel level input reading

The **Evap Monitor Microprocessor** is checked for proper microprocessor operation or loss of CAN communication with the main microprocessor (P260F). Applies only if EONV is in separate microprocessor.

Evap Monitor Microprocessor Performance:	
DTCs	P260F - Evap System Monitoring Processor Performance
Monitor execution	continuous
Monitor Sequence	None
Sensors OK	not applicable
Monitoring Duration	5 seconds

ED_002078G_00001322-00063

Evap Switching Valve (EVAPSV) Diagnostics

The Evap Switching Valve (EVAPSV) is included on HEV applications for 2009 Model Year. It is very similar to the Fuel Tank Isolation Valve (FTIV) used in previous model years. The Evap Switching Valve is also known as a Vapor Blocking Valve (VBV). The purpose of the EVAPSV is to isolate the fuel tank from the rest of the evaporative system so that the Canister Purge Valve (CPV) can purge more aggressively with minimal risk of purge vapor slugs being ingested into the intake.

The EVAPSV is normally closed during engine operation, but may vent during a drive to relieve positive pressure. The exact pressure points at which the valve opens and closes are vehicle dependent. When the vehicle is in a key-off state, the EVAPSV is not powered and the valve is open.

The VBV circuit and functional diagnostics will set the following DTCs:

P2418 – EVAPSV circuit fault
P2450 – EVAPSV stuck open fault

The EVAPSV circuit diagnostics are very similar to that of the Canister Purge Valve (CPV) and Canister Vent Solenoid (CVS). See Evap System Monitor Component Checks below.

A diagram of an evaporative system with an EVAPSV (shown as a VBV) is shown below:

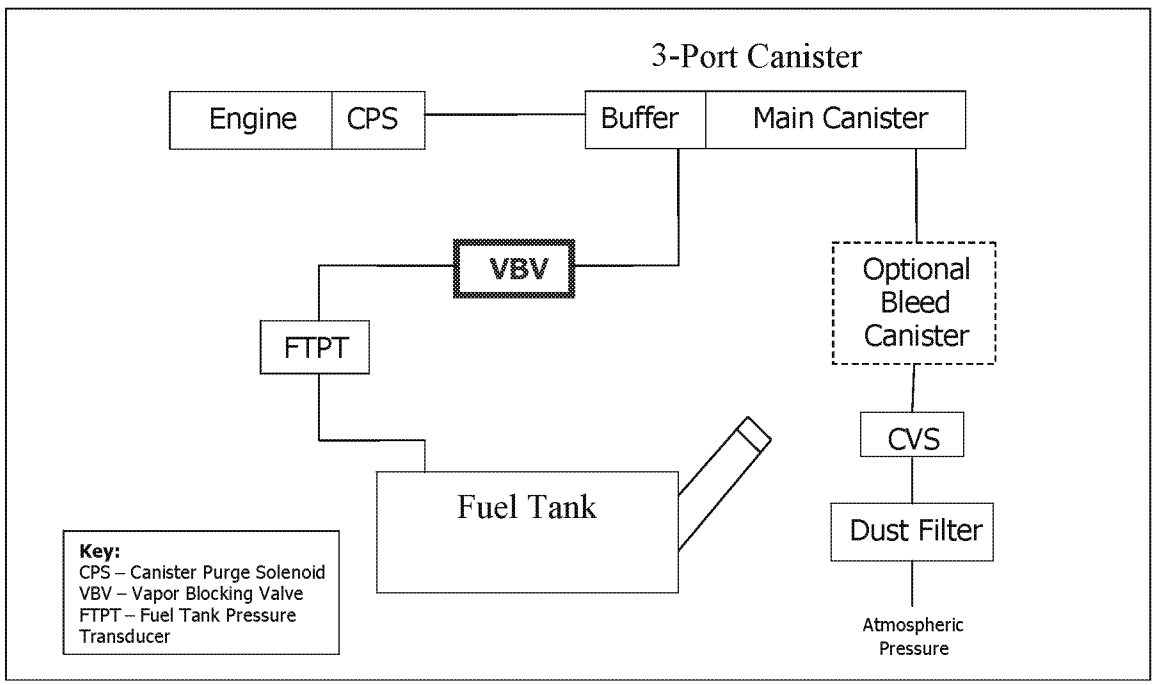

ED_002078G_00001322-00064

The Evaporative System monitor performs a functional check of the EVAPSV in Phase 3 of the evap monitor cruise tests if the 0.040" leak test passes. At the end of Phase 2, tank pressure will be in the range of -8 to -5 "H20 and the EVAPSV will be open. At the beginning of Phase 3, the EVAPSV is commanded closed and the CVS is commanded open. If the EVAPSV fails to close, there will be a rapid pressure loss in the fuel tank. If this pressure loss exceeds a calibrated threshold, a P2450 DTC is set. (Requires 2 or 3 failures in a row during a driving cycle (calibratable)). If the fault is present on a second driving cycle, the MIL will be illuminated.

EVAP Switching Valve (EVAPSV) Monitor Operation:	
DTC	P2450
Monitor execution	once per driving cycle
Monitor Sequence	Runs after evap 0.040" cruise test
Sensors/Components OK	MAF, IAT, VSS, ECT, CKP, TP, FTP, CPV, CVS
Monitoring Duration	30 seconds (see disablement conditions below)

Typical EVAP Switching Valve (EVAPSV) monitor entry conditions:		
Entry condition	Minimum	Maximum
0.040" Cruise Test completes		

Typical EVAP Switching Valve (EVAPSV) abort conditions:
Change in fuel fill level: > 15%

Typical EVAP Switching Valve (EVAPSV) malfunction thresholds:
P2418: Presence of short, open, or intermittent fault for more than 5 seconds
P2450: Pressure loss > 3" H_20 during phase 3.

J1979 Evaporative System Mode $06 Data			
Test ID	Comp ID	Description	Units
$3D	$82	Vapor blocking valve performance (P2450)	Pa
Note: Default values (0.0 Pa) will be displayed for all the above TIDs if the evap monitor has never completed. Each TID is associated with a particular DTC. The TID for the appropriate DTC will be updated based on the current or last driving cycle, default values will be displayed for any phases that have not completed.			

ED_002078G_00001322-00065

Blocked Purge Line Diagnostics

If an in-line Fuel Tank Pressure Transducer is used, it is possible for a blockage to occur between the Fuel Tank Pressure Transducer (FTPT) and fuel tank. If this occurs, the evap monitor would run and pass all leak check diagnostics even if there is a leak at the fuel cap. (The blockage will make the system look sealed despite the leak.). The blocked line diagnostic looks for a rapid drop in pressure during Phase 0 of the cruise test. This rapid pressure drop occurs because the Canister Purge Valve (CPV) applies a vacuum to just the canister and evap lines. Upon seeing an excessively fast pressure drop in Phase 0, the evap monitor will invoke a special execution of Phase 3 & 4 where a CPV pressure pulse is applied to the evap system. This pressure pulse is at a very low flow and short duration (0.5 -1.0 seconds) to avoid drivability issues. If this intrusive test fails, the Phase 0 test and the intrusive test are repeated 2 or 3 times prior to setting a P144A DTC.

Diagram of an evaporative system with a blockage is shown below:

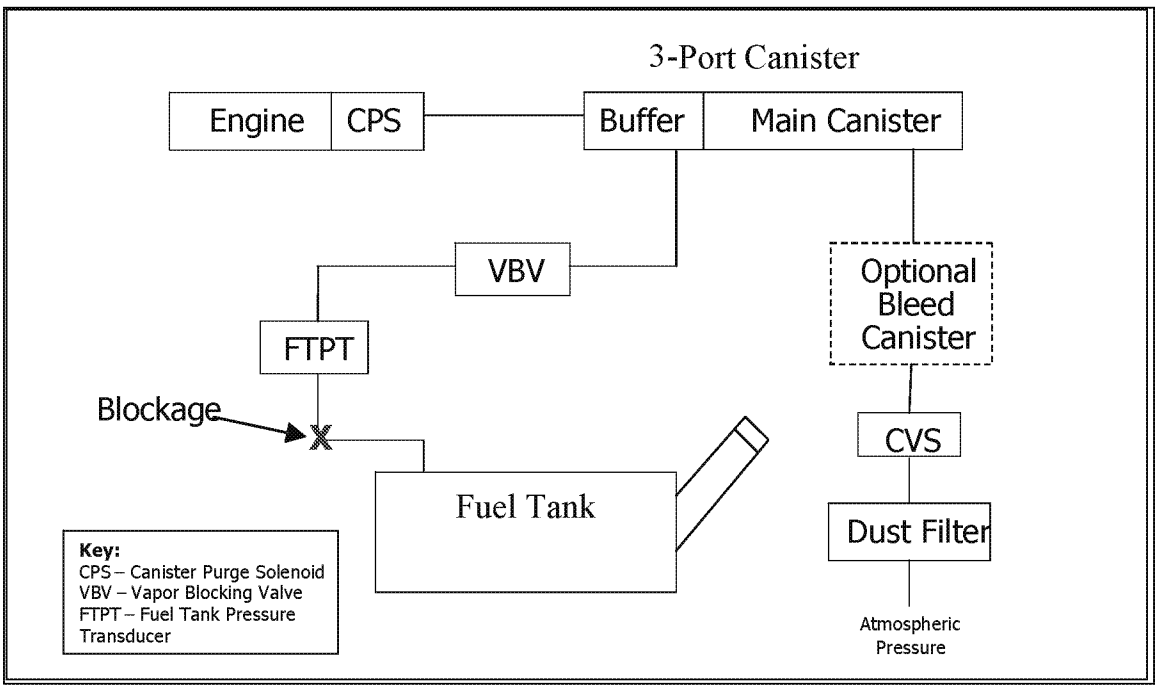

ED_002078G_00001322-00066

EVAP Blocked Line Monitor Operation:	
DTC	P144A
Monitor execution	once per driving cycle
Monitor Sequence	Runs during Phase 0 of evap 0.040" cruise test. Performs an intrusive test in Phases 3 & 4 to confirm a fault.
Sensors/Components OK	MAF, IAT, VSS, ECT, CKP, TP, FTP, CPV, CVS
Monitoring Duration	30 seconds (see disablement conditions below)

Typical Blocked Line monitor entry conditions:		
Entry condition	Minimum	Maximum
General 0.040" Cruise Test conditions apply		
Air mass high enough for intrusive portion of test	1.5 (lb/min)	
Manifold vacuum high enough for intrusive portion of test	5 "Hg	
Not in open loop fueling		
CPV purging		

Typical EVAP Blocked Line abort conditions:
All items cited under entry conditions apply.

Typical EVAP Blocked Line malfunction thresholds:
P144A: Phase 0 portion of test delta pressure < -5 "H_20/sec
P144A: Phase 3 & 4 (intrusive test) pressure response < -2 "H_20

J1979 Evaporative System Mode $06 Data			
Test ID	Comp ID	Description	Units
$3D	$80	Blocked Evap System Line - Screening test (P144A)	Pa/sec
$3D	$81	Blocked Evap System Line - Fault confirmation test (P144A)	Pa
Note: Default values (0.0) will be displayed for all the above TIDs if the evap monitor has never completed. Each TID is associated with a particular DTC. The TID for the appropriate DTC will be updated based on the current or last driving cycle, default values will be displayed for any phases that have not completed.			

Single Path Purge Check Valve Diagnostics

Boosted applications use a mechanical check valve between the intake manifold and the Canister Purge Valve (CPV). The purpose of this check valve is to prevent reverse flow through the evaporative emissions system under boosted conditions. The check valve is a simple diaphragm type valve were the rubber diaphragm slides inside a cylinder and is pushed against a stop under boost closing off flow through the valve. While at atmosphere or under vacuum the valve is pulled off the stop allowing flow from the evaporative system to the intake manifold. The check valve diagnostic looks for a failed open, improperly installed, or missing valve that could result in intake manifold vapors being pushed back into the evaporative emissions system (see figure below). A failed check valve is detected if the rate of rise in Fuel Tank Pressure Sensor is greater than a calibratable threshold while the Canister Vent Valve is closed, Canister Purge Valve open, and the engine is boosted above a minimum level (under boost the system should be sealed if the check valve is operating properly). This condition will set DTC P144C.

Figure: System schematic showing the potential for reverse flow if the check valve is failed.

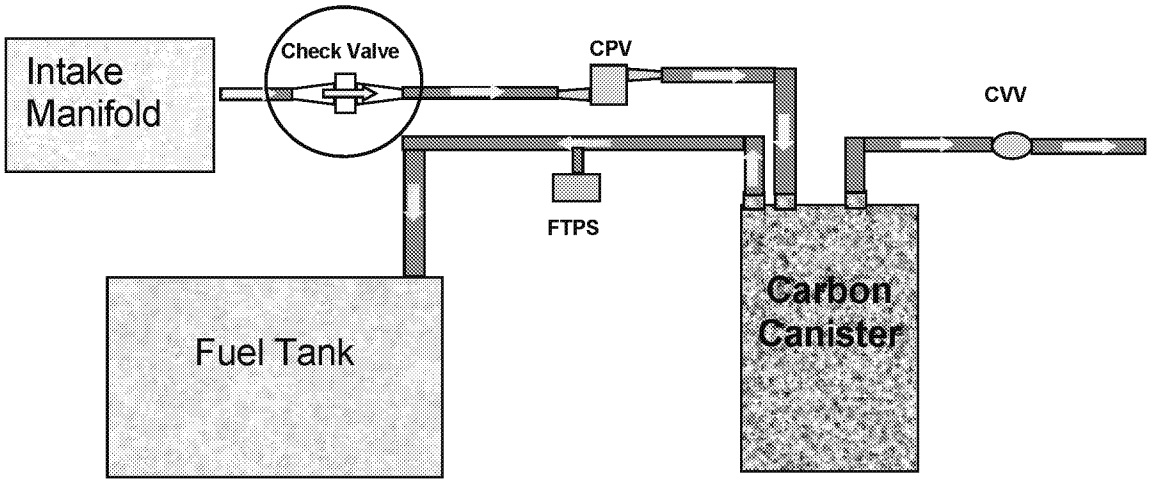

ED_002078G_00001322-00068

Evaporative System Purge Check Valve Performance Diagnostic Operation:	
DTC	P144C - Evaporative Emission System Purge Check Valve Performance
Monitor execution	Once per driving cycle, during boosted operation
Monitor Sequence	None
Sensors/Components OK	ECT/CHT, IAT, MAP, CPV, CVV, FTPT, FLI, BARO, TIP
Monitoring Duration	5 to 10 seconds depending on level of boost

Typical Evaporative System Purge Check Valve Performance Entry Conditions		
Entry condition	Minimum	Maximum
Ambient temperature (IAT)	40 °F	95 °F
Battery Voltage	11.0 Volts	
Fuel level	15%	85%
Engine Coolant Temperature (CHT/ECT)	160 °F	
Atmospheric Pressure (BARO)	23" Hg	
Boost Pressure (MAP – BARO)	4 to 8" Hg	
Engine Delta Load	0.2	
Vehicle Acceleration	0.5 mph / sec	

Typical Evaporative System Purge Check Valve Diagnostic malfunction thresholds:
Pressure Rise Rate (delta pressure / delta time) > 0.50 " H_2O/sec Threshold is a function of fuel level with a range of 0.5 to 1.0

ED_002078G_00001322-00069

Dual Path Purge Check Valve Diagnostics

Boosted applications that have a lower power-to-weight ratio use two purge flow paths to allow purge under boost conditions in addition to normal vacuum conditions.

Dual path purge applications use a mechanical check valve 1 (CV1) between the intake manifold and the Canister Purge Valve (CPV). During non-boosted conditions, purge vapors go through check valve 1 before entering the intake. The purpose of this check valve is to prevent reverse flow through the evaporative emissions system under boosted conditions. The check valve is a simple diaphragm type valve were the rubber diaphragm slides inside a cylinder and is pushed against a stop under boost closing off flow through the valve.

A second identical check valve 2 (CV2) is used to facilitate purging during boost. During boosted conditions, a venturi device, called an ejector, is used to generate the needed vacuum for purging. The purge vapors flow through CV2, the turbo charger, and the charge air cooler before entering the intake manifold.

The check valve diagnostic looks for a failed open CV1, a failed closed CV2, a failed ejector, an improperly installed CV1 or CV2, or missing CV1 that could result in intake manifold vapors being pushed back into the evaporative emissions system or lack of purge under boost.

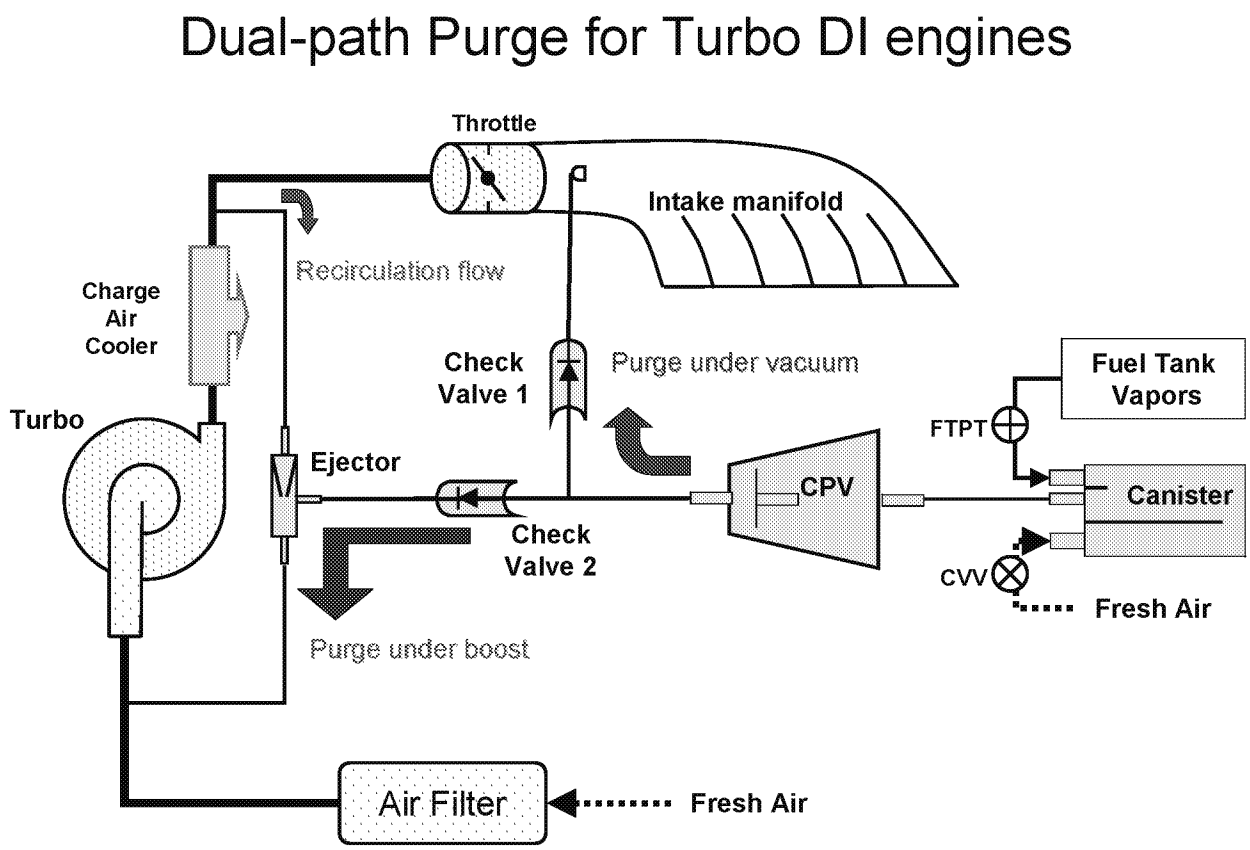

ED_002078G_00001322-00070

A failed CV1 is detected if the rate of rise in Fuel Tank Pressure Sensor is greater than a calibratable threshold while the Canister Vent Valve is closed, Canister Purge Valve open, and the engine is boosted above a minimum level. Under boost, the system should be sealed if the check valve is operating properly. This condition will set DTC P144C.

A failed CV2 is detected if the rate of change of ejector generated vacuum is relatively flat within a threshold window during boosted conditions. This will set DTC P144C. Steep vacuum slopes for CV2 are indicative of good functioning valves. See the figure below for CV1/CV2 pass and fail ranges.

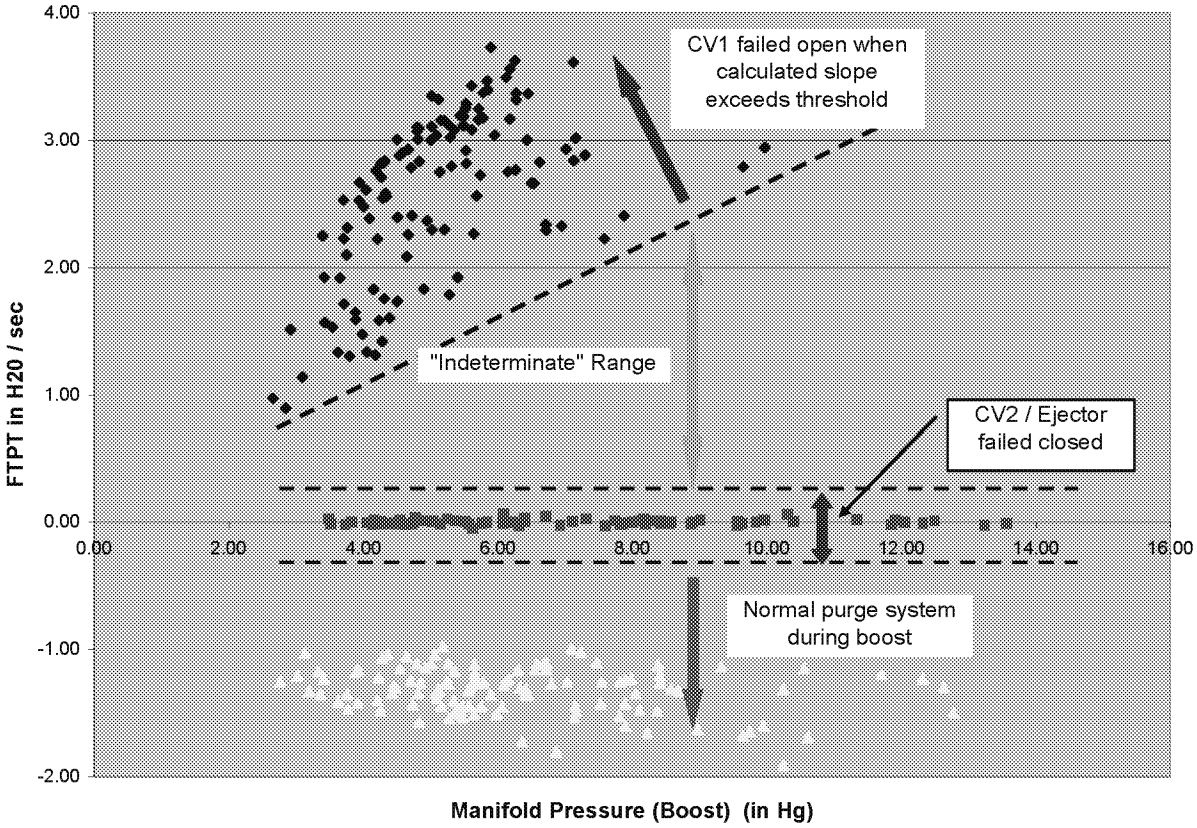

Evaporative System Purge Check Valve Performance Diagnostic Operation:	
DTC	P144C - Evaporative Emission System Purge Check Valve Performance
Monitor execution	Once per driving cycle, during boosted operation
Monitor Sequence	None
Sensors/Components OK	ECT/CHT, IAT, MAP, CPV, CVV, FTPT, FLI, BARO, TIP, WASTEGATE
Monitoring Duration	5 to 10 seconds depending on level of boost

Typical Evaporative System Purge Check Valve Performance Entry Conditions		
Entry condition	Minimum	Maximum
Ambient air temperature	40 ° F	105 ° F
Battery Voltage	11.0 Volts	
Fuel level	15%	90%
Engine Coolant Temperature	160 ° F	
Atmospheric Pressure (BARO)	23" Hg	
Boost Pressure (MAP – BARO)	8" Hg	

Typical Evaporative System Purge Check Valve Diagnostic malfunction thresholds:
CV1- Pressure Rise Rate (delta pressure / delta time) > 1 " H_2O/sec
CV1- Threshold is a function of fuel level with a range of 1.5 to 2.6
CV2- Vacuum Rate (delta vacuum / delta time) >-0.4 and < 0.5 H_2O/sec
CV2- Threshold is a function of fuel level with a range of 0.5 to 0.7 for the upper band and -0.4 to -0.3 for the lower band

The adaptive fuel strategy uses O2 sensors for fuel feedback. The fuel equation includes short and long term fuel trim modifiers:

$$\text{FUEL MASS} = \frac{\text{AIR MASS} * \text{SHRTFT} * \text{LONGFT}}{\text{EQUIV_RATIO} * 14.64}$$

Where:

Fuel Mass = desired fuel mass
Air Mass = measured air mass, from MAF sensor
SHRTFT = Short Term Fuel Trim, calculated
LONGFT = Long Term Fuel Trim, learned table value, stored in Keep Alive Memory
EQUIV_RATIO = Desired equivalence ratio, 1.0 = stoich, > 1.0 is lean, < 1.0 is rich
14.64 = Stoichiometric ratio for gasoline

A conventional O2 sensor (not a wide-range sensor) can only indicate if the mixture is richer or leaner than stoichiometric. During closed loop operation, short term fuel trim values are calculated by the PCM using oxygen sensor inputs in order to maintain a stoichiometric air/fuel ratio. The PCM is constantly making adjustments to the short term fuel trim, which causes the oxygen sensor voltage to switch from rich to lean around the stoichiometric point. As long as the short term fuel trim is able to cause the oxygen sensor voltage to switch, a stoichiometric air/fuel ratio is maintained.

When initially entering closed loop fuel, SHRTFT starts 1.0 and begins adding or subtracting fuel in order to make the oxygen sensor switch from its current state. If the oxygen sensor signal sent to the PCM is greater than 0.45 volts, the PCM considers the mixture rich and SHRTFT shortens the injector pulse width. When the cylinder fires using the new injector pulse width, the exhaust contains more oxygen. Now when the exhaust passes the oxygen sensor, it causes the voltage to switch below 0.45 volts, the PCM considers the mixture lean, and SHRTFT lengthens the injector pulse width. This cycle continues as long as the fuel system is in closed loop operation.

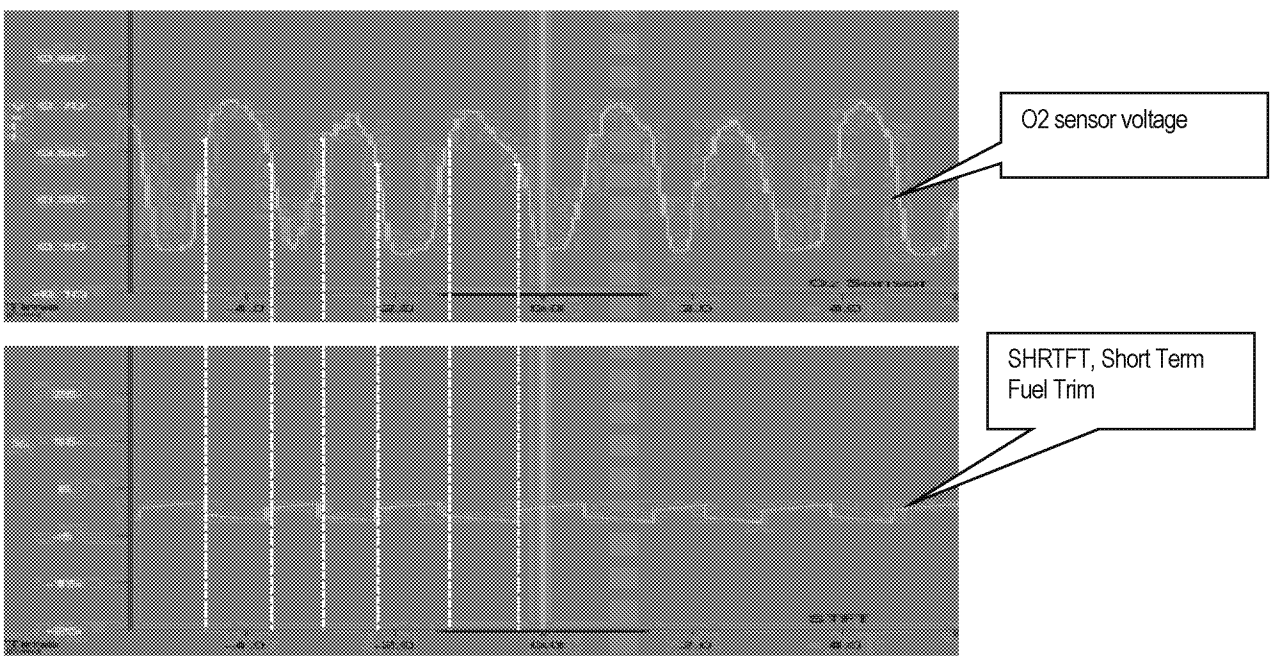

ED_002078G_00001322-00073

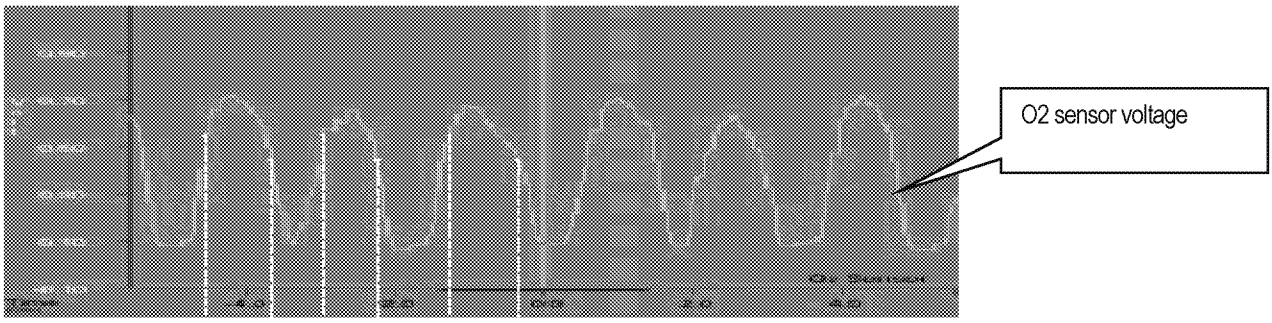
O2 sensor voltage

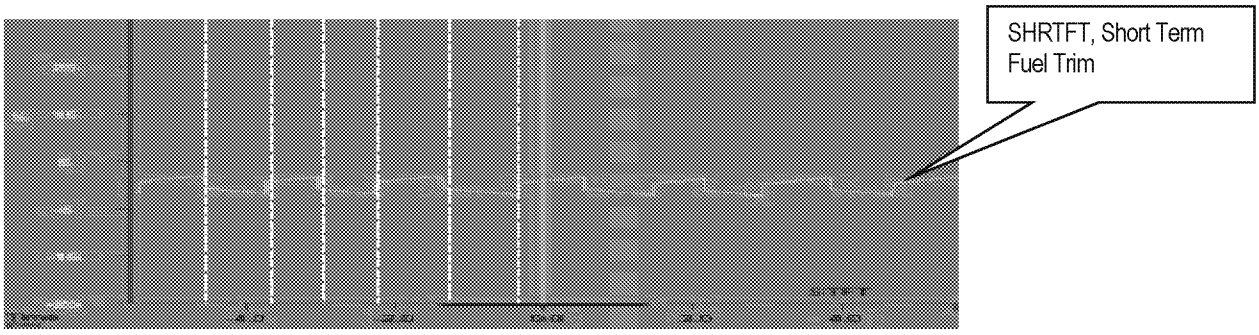
SHRTFT, Short Term Fuel Trim

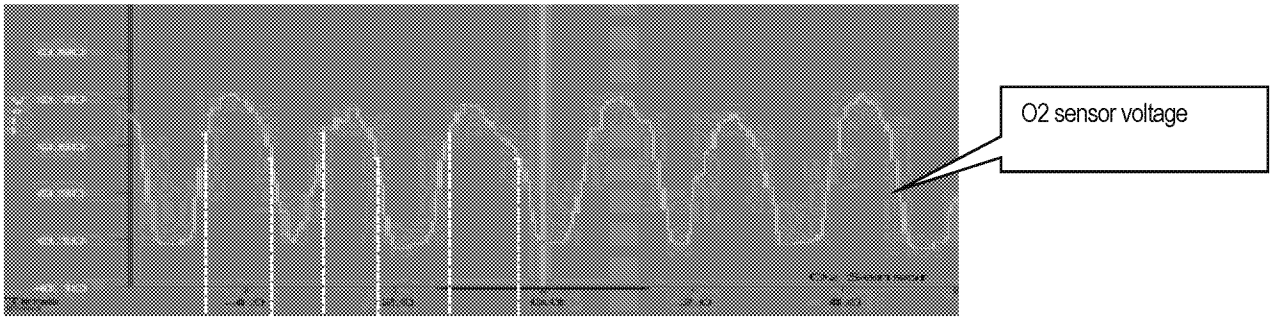
O2 sensor voltage

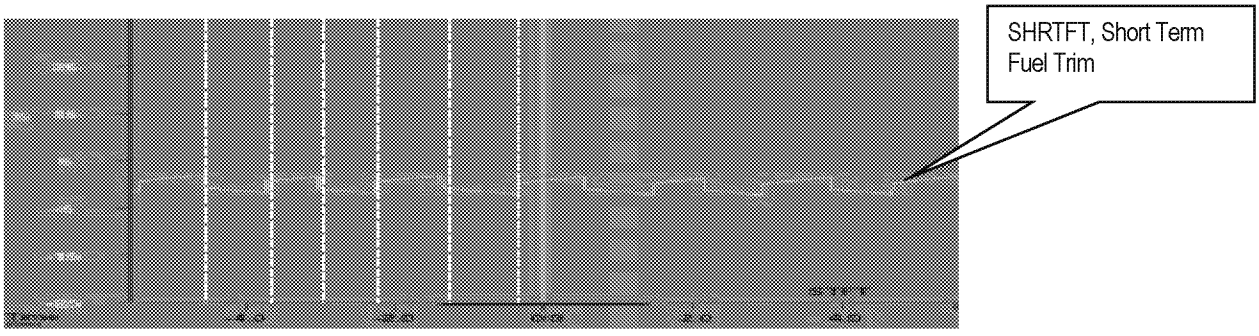
SHRTFT, Short Term Fuel Trim

As fuel, air, or engine components age or otherwise change over the life of the vehicle, the adaptive fuel strategy learns deviations from stoichiometry while running in closed loop fuel. Corrections are only learned during closed loop operation, and are stored in the PCM as long term fuel trim values (LONGFT). They may be stored into an 8x10 rpm/load table or they may be stored as a function of air mass. LONGFT values are only learned when SHRTFT values cause the oxygen sensor to switch. If the average SHRTFT value remains above or below stoichiometry, the PCM "learns" a new LONGFT value, which allows the SHRTFT value to return to an average value near 1.0. LONGFT values are stored in Keep Alive Memory as a function of air mass. The LONGFT value displayed on the scan tool is the value being used for the current operating condition.

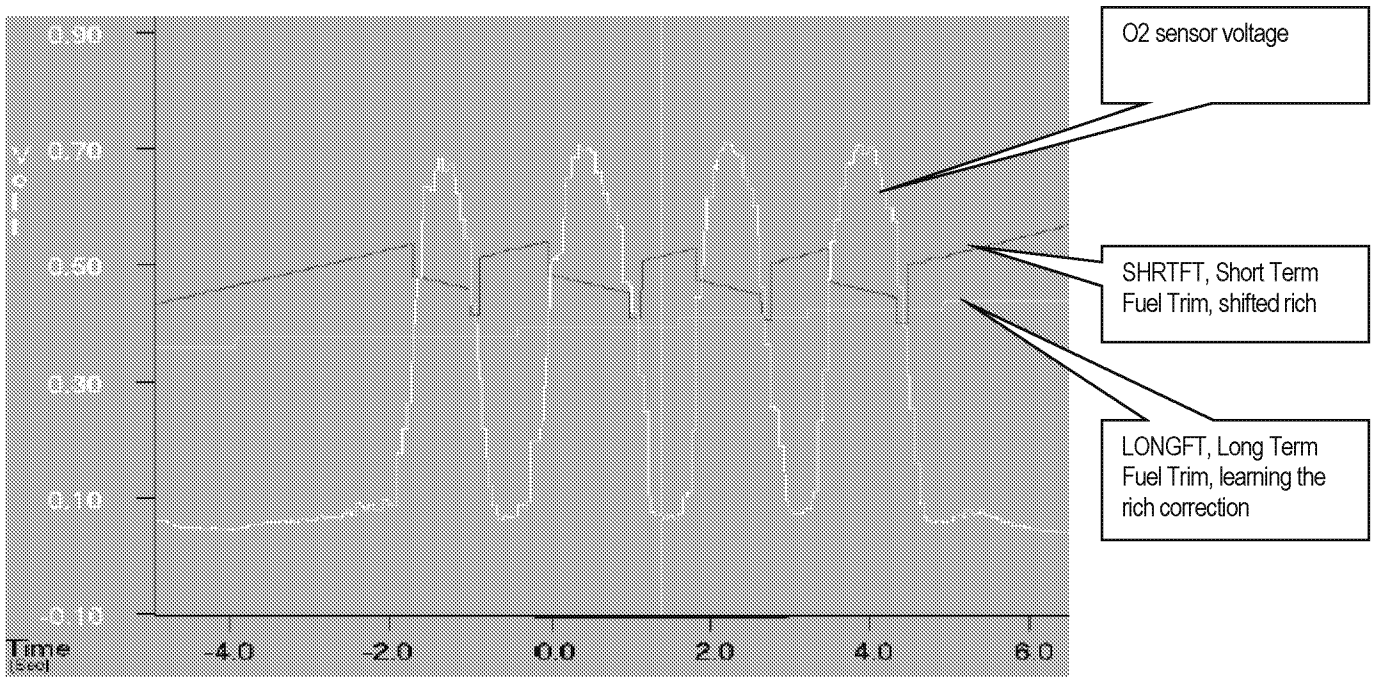

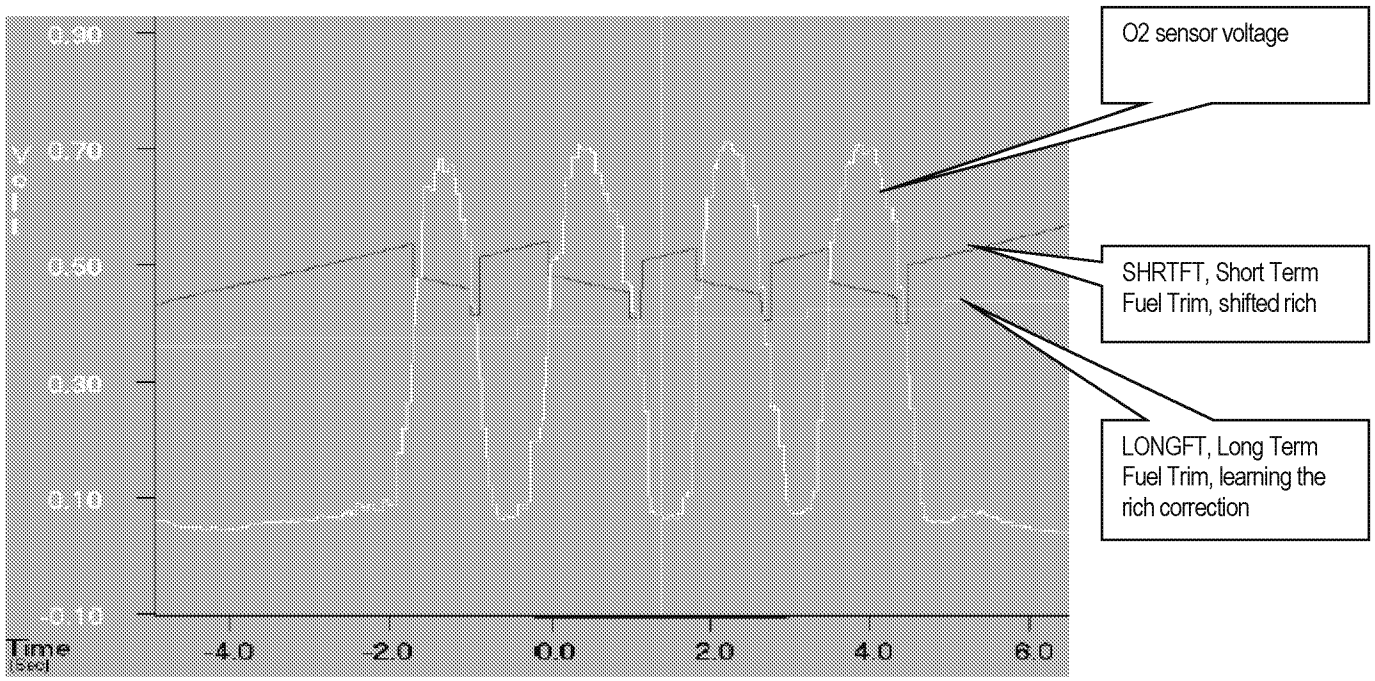

O2 sensor voltage

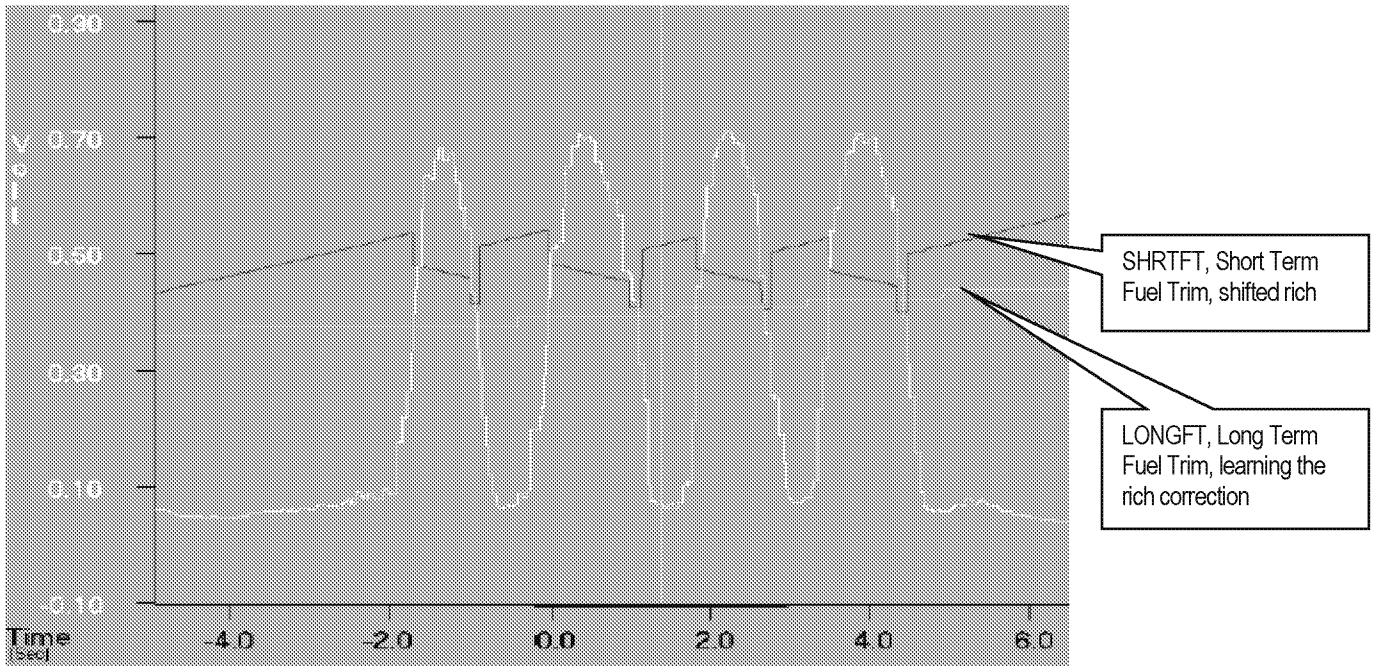

As components continue to change beyond normal limits or if a malfunction occurs, the long-term fuel trim values will reach a calibratable rich or lean limit where the adaptive fuel strategy is no longer allowed to compensate for additional fuel system changes. Long term fuel trim corrections at their limits, in conjunction with a calibratable deviation in short term fuel trim, indicate a rich or lean fuel system malfunction.

Note that in the PCM, both long and short-term fuel trim are multipliers in the fuel pulse width equation. Scan tools normally display fuel trim as percent adders. If there were no correction required, a scan tool would display 0% even though the PCM was actually using a multiplier of 1.0 in the fuel pulse width equation.

ED_002078G_00001322-00076

Fuel System Monitor

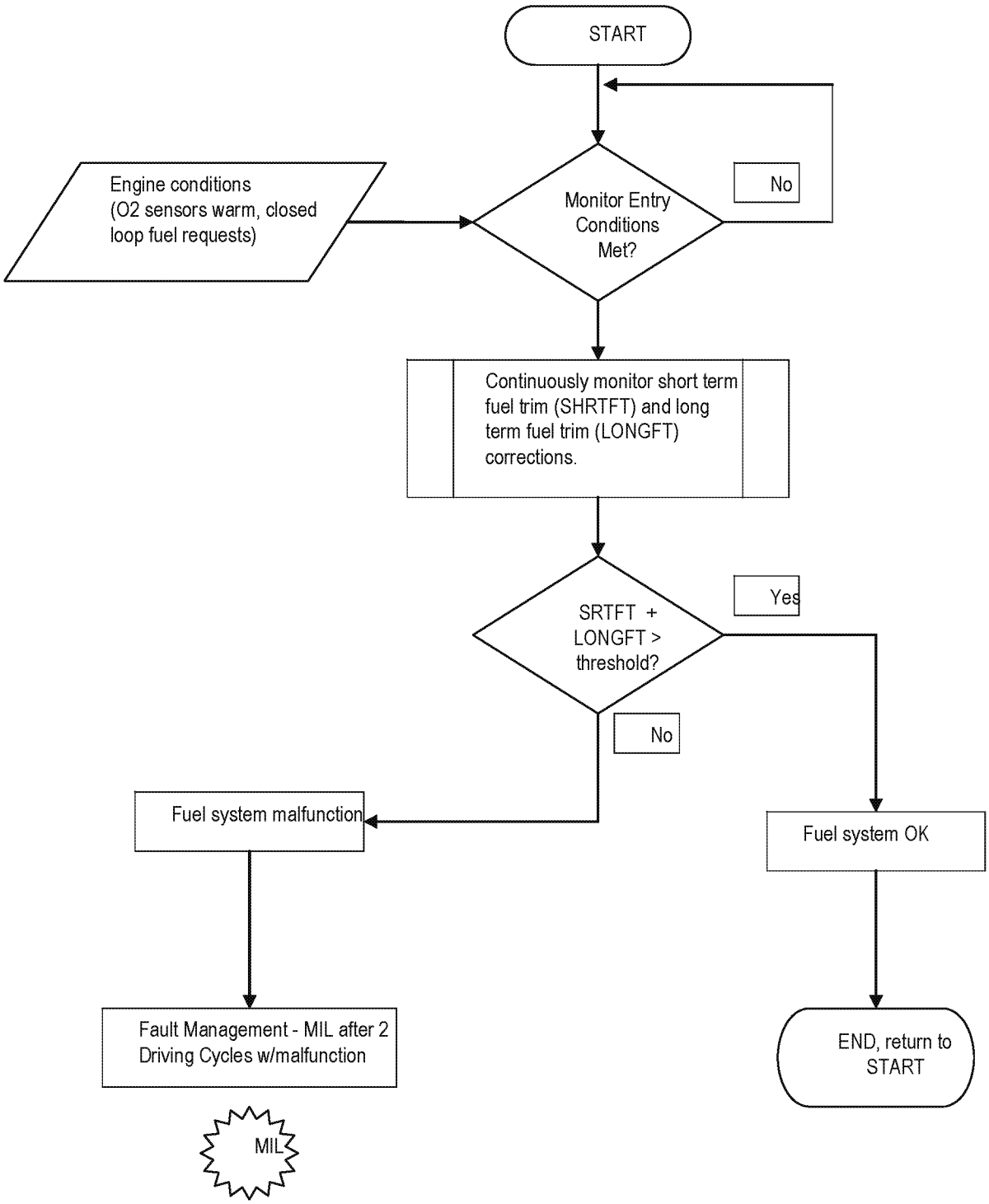

ED_002078G_00001322-00077

Fuel Monitor Operation:	
DTCs	P0171 Bank 1 Lean, P0174 Bank 2 Lean P0172 Bank 1 Rich, P0175 Bank 2 Rich
Monitor execution	continuous while in closed loop fuel
Monitor Sequence	none
Sensors OK	Fuel Rail Pressure (if available), IAT, CHT/ECT, MAF, TP
Monitoring Duration	2 seconds to register malfunction

Typical fuel monitor entry conditions:		
Entry condition	Minimum	Maximum
Engine Coolant Temp	150 °F	250 °F
Engine load	12%	
Intake Air Temp	-30 °F	150 °F
Air Mass Range	0.75 lb/min	
Purge Duty Cycle	0%	0%

Typical fuel monitor malfunction thresholds:
Long Term Fuel Trim correction cell currently being utilized in conjunction with Short Term Fuel Trim: Lean malfunction: LONGFT > 25%, SHRTFT > 5% Rich malfunction: LONGFT < 25%, SHRTFT < 5%

ED_002078G_00001322-00078

FAOSC (Rear Fuel Trim) Monitor

As the front UEGO sensor ages and gets exposed to contaminants, it can develop a rich or lean bias in its transfer function. The rear bias control (also called FAOSC – Fore/Aft Oxygen Sensor Control) system is designed to compensate for any of these bias shifts (offsets) using the downstream HO2S sensor. The "FAOS" monitor looks for any bias shifts at the stoichiometric point of the front UEGO sensor lambda curve. If the UEGO has developed a bias beyond the point for which it can be compensated for, lean (P2096, P2098) or rich (P2097, P2099) fault codes will be set.

UEGO "FAOS Monitor" Operation:	
DTCs	P2096 – Post catalyst fuel trim system too lean (Bank 1) P2097 – Post catalyst fuel trim system too rich (Bank 1) P2098 – Post catalyst fuel trim system too lean (Bank 2) P2099 – Post catalyst fuel trim system too rich (Bank 2)
Monitor execution	Continuous while in closed loop fuel
Monitor Sequence	> 30 seconds time in lack of movement test, > 30 seconds time in lack of switch test
Sensors OK	ECT, IAT, MAF, MAP, VSS, TP, ETC, FRP, FVR, DPFE EGR, VCT, VMV/EVMV, CVS, CPV, EVAPSV, FTP, CKP, CMP, ignition coils, injectors, no misfire DTCs, no system failures affecting fuel, no EVAP gross leak failure, UEGO heaters OK, rear HO2S heaters OK, no "lack of switching" malfunction, no "lack of movement" malfunction, no UEGO circuit malfunction, no rear stream 2 HO2S circuit malfunction, no rear stream 2 HO2S functional DTCs, no rear stream 2 HO2S response rate malfunction.
Monitoring Duration	5 seconds to register a malfunction

ED_002078G_00001322-00079

Typical UEGO "FAOS Monitor" entry conditions:		
Entry condition	Minimum	Maximum
Closed loop stoich fuel control		
Time since engine start	20 seconds	
Engine Coolant Temp	160 °F	250 °F
Time since entering closed loop fuel	20 seconds	
Fuel Level	15%	
Short Term Fuel Trim Range	-13%	18%
Air mass range	2 lbm/min	8 lbm/min
Learning conditions stability time (based on air mass)	15 seconds	
Injector fuel pulse width (not at minimum clip)	650 usec	
Inferred HO2S 2 Heated Tip Temperature	1100 °F	
No excessive movement between currently utilized long term fuel trim cells (1 = complete change from one cell to adjacent cell)		0.5
UEGO sensor within +/- 2 % from the fuel control target		
UEGO ASIC not in recalibration mode		
Stream1 UEGO response test not running		
Intrusive UEGO catalyst monitor not running		
Not performing intrusive UEGO Lack-of-Movement fuel control defib		
No air passing through during valve overlap (scavenging).		
Battery Voltage	11.0 Volts	18.0 Volts

Typical UEGO "FAOS Monitor" malfunction thresholds:
>= 5 seconds since reaching the FAOSC lean or rich limits while system bias maturity is met.
Lean malfunction: -0.083 rear bias trim limit
Rich malfunction: 0.087 rear bias trim limit

ED_002078G_00001322-00080

Air Fuel Ratio Imbalance Monitor

The Air Fuel Imbalance Monitor is designed to monitor the cylinder-to-cylinder air fuel imbalance per engine bank. When an Air Fuel (A/F) imbalance is present, the front UEGO signal becomes noisier. The monitor uses the high frequency component from the UEGO signal as an indicator of A/F imbalance. "Hash" is the difference between two consecutive front UEGO voltage samples. The UEGO signal is monitored continuously and a differential or "hash" value is continuously calculated. When the hash is below a threshold, it is indicative of normal operation. If the hash exceeds the threshold, an A/F imbalance is assumed which increments a hash error counter. The counter accumulates hash during series of calibratable rpm windows. Typically, a single window consists of 50 engine revolutions. A total rpm window counter calculates number of completed rpm windows. Monitor completion typically requires 30 rpm windows. When the monitor completes, an A/Fuel imbalance index is calculated. The monitor index is defined as the ratio of the failed rpm windows over the total rpm windows required to complete monitor. If the monitor imbalance ratio index exceeds the threshold value, an A/F imbalance DTC is set.

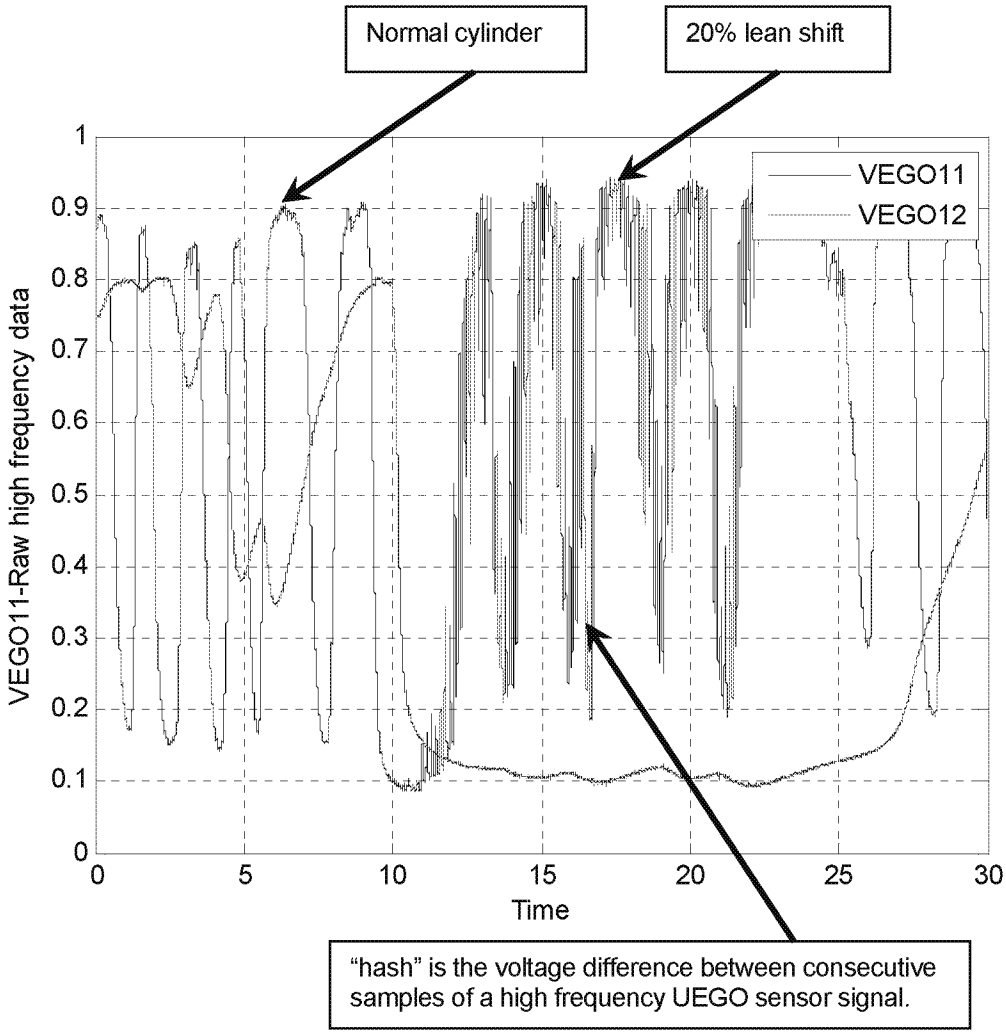

ED_002078G_00001322-00081

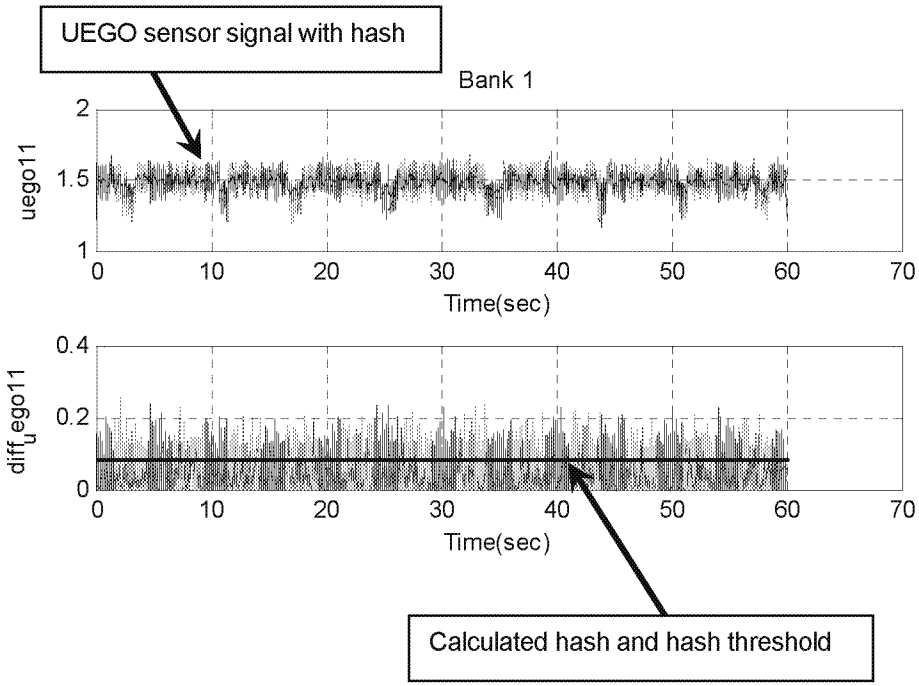
UEGO sensor signal with hash
Bank 1
uego11
Time(sec)
diff_uego11
Time(sec)
Calculated hash and hash threshold

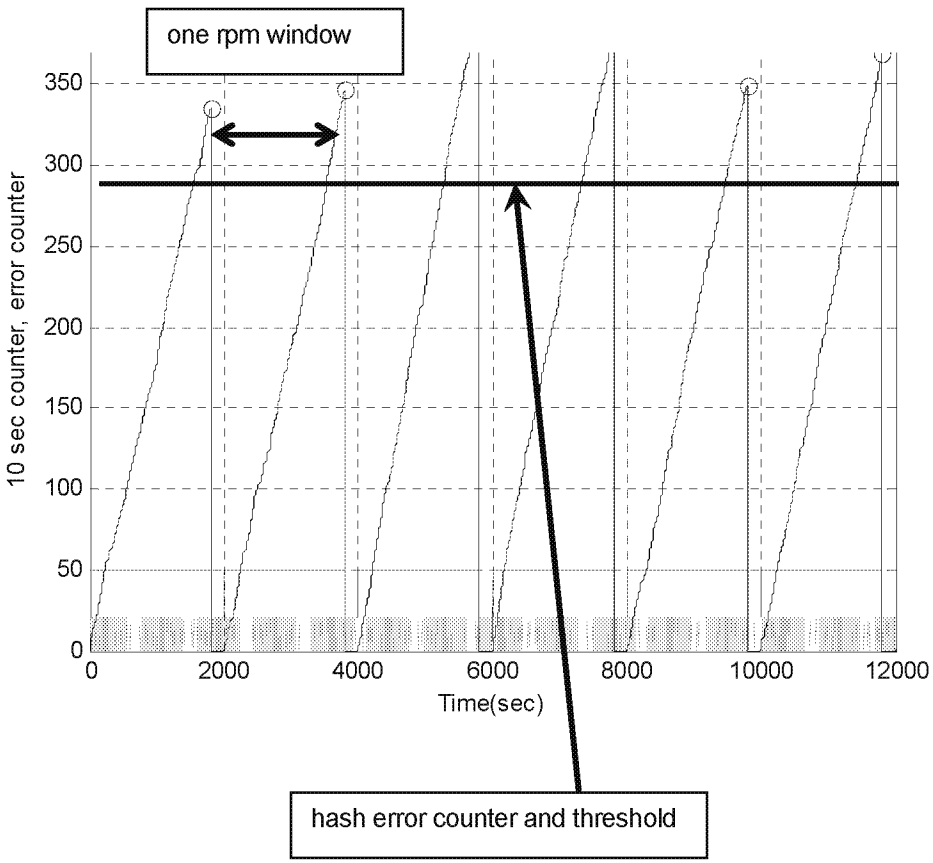
one rpm window
10 sec counter, error counter
Time(sec)
hash error counter and threshold

Air Fuel Ratio Imbalance Operation	
DTCs	P219A – Bank 1 Air-Fuel Ratio Imbalance P219B – Bank 2 Air-Fuel Ratio Imbalance
Monitor execution	Once per driving cycle during closed loop
Monitor Sequence	Monitor runs after fuel monitor has adapted
Sensors OK	ECT, IAT, MAF, VSS, TP, ETC, FRP, DPFE EGR, VCT, VMV/EVMV, CVS, FTP, CKP, CMP, ignition coils, injectors, no misfire DTCs, no system failures affecting fuel, no EVAP gross leak failure, UEGO heaters OK, rear HO2S heaters OK, no "lack of switching" malfunction, no "lack of movement" malfunction, no UEGO circuit malfunction, no rear stream 2 HO2S circuit malfunction, no rear stream 2 HO2S functional DTCs, no rear stream 2 HO2S response rate malfunction.
Monitoring Duration	Time to complete monitor ranges from 300 to 700 seconds

Air Fuel Ratio Imbalance entry conditions:		
Entry condition	Minimum	Maximum
Closed Loop Fuel Control		
Engine Air Mass	2 lb/min	10 lb/min
Engine RPM	1250 rpm	3000 rpm
Engine Load	40%	70%
Engine Coolant Temp	150 °F	250 °F
Intake Air Temp	20 °F	150 °F
Throttle Position Rate of Change		0.122 v/100 msec
Fuel percentage from purge		40%
Fuel Level	15%	
Fuel monitor has adapted		
No purge on/off transition		
Fuel type leaning is complete (FFV only)		

Air Fuel Ratio Imbalance malfunction thresholds:
Imbalance Ratio Bank 1 > .75 Imbalance Ratio Bank 2 > .75

J1979 AFIMN MONITOR MODE $06 DATA			
Monitor ID	Test ID	Description	
$81	$80	Bank 1 imbalance-ratio and max. limit (P219A/P219B)	unitless
$82	$80	Bank 2 imbalance-ratio and max. limit (P219A/P219B)	unitless

ED_002078G_00001322-00083

Flex Fuel Operation

Ford Motor Company is cooperating with the Department of Energy in providing customers with vehicles capable of using alcohol-blended fuels. These fuels are renewable and can lower some engine emission byproducts. The original 1993 Taurus vehicle hardware and calibration were designed for use on any combination of gasoline or methanol up to 85% methanol. Current flex fuel vehicles, however, are no longer designed for methanol, but are designed to be compatible with any combination of gasoline and ethanol, up to 85% ethanol.

This flexible fuel capability allows the vehicle to be usable in all regions of the country, even as the alcohol infrastructure is being built. Operation of a vehicle with the alcohol-blended fuels is intended to be transparent to the customer. Drivability, NVH, and other attributes are not notably different when using the alcohol-blended fuels. The higher octane of alcohol-blended fuels allows a small increase in power and performance (approximately 4%), but this is offset by the lower fuel economy (approximately 33%) due to the lower energy content. Cold starts with alcohol-blended fuels are somewhat more difficult than with gasoline due to the lower volatility of alcohol-blended fuels; 10% vaporization occurs at approximately 100 °F for gasoline vs. 160 °F for 85% ethanol. Ethanol requires approximately 37% more flow than gasoline due to a lower heating value (29.7 vs. 47.3 MJ/kg). Consequently, Flex Fuel vehicles require higher flow injectors than their gasoline counterparts. This results in a smaller fuel pulse widths with gasoline and makes the task of purging the canister more difficult during idles and decels.

In order to maintain proper fuel control, the PCM strategy needs to know the stoichiometric Air/Fuel Ratio for use in the fuel pulse width equation. On pre-2000 MY flex fuel vehicles, the percent alcohol in the fuel was determined by reading the output of the Flex fuel Sensor. The percent alcohol was stored in a register called Percent Methanol (PM). Although current alcohol-blended fuels only include ethanol, the percent methanol nomenclature has persisted. On 2000 MY and later vehicles, the Flex Fuel Sensor has been deleted and PM is inferred. The strategy to infer the correct A/F Ratio (AFR) relies on the oxygen sensor input to maintain stoichiometry after vehicle refueling occurs.

The relationship between PM and AFR is shown in the table below.

Stoich Air Fuel Ratio = 14.64 - 5.64 * PM	
PM (percent alcohol)	Stoichiometric AFR
0.00 (100 % gasoline)	14.64
0.05	14.36
0.10 (standard gasoline)	14.08
0.15	13.79
0.20	13.51
0.25	13.23
0.30	12.95
0.35	12.67
0.40	12.38
0.45	12.10
0.50	11.82
0.55	11.54
0.60	11.26
0.65	10.97
0.70	10.69
0.75	10.41
0.80	10.13
0.85 (standard E85)	9.85
0.90	9.56
0.95	9.28
1.00 (100% ethanol)	9.00

ED_002078G_00001322-00084

The fuel level input is used to determine if a refueling event has occurred, either after the initial start or while the engine is running. If refueling event is detected (typically calibrated as a 10% increase in fuel level), the PCM tracks the "old" fuel being consumed by the engine. After a calibrated amount of "old" fuel has been consumed from the fuel lines, fuel rail, etc., the "new" fuel is assumed to have reached the engine. Normal long term fuel trim learning and purge control are temporarily disabled along with the evaporative system monitor and fuel system monitor to allow the composition of the fuel to be determined. The filtered value of short-term fuel trim is used during closed loop to adjust AFR in order to maintain stoichiometry. During learning, all changes in AFR are stored into the AFRMOD register. As updates are made to the AFRMOD register, the fuel composition register (PM) is updated and stored in Keep Alive Memory. Learning continues until the inference stabilizes with stabilized engine operating conditions. The PM inference and engine operating conditions are considered to have stabilized when all of the following conditions are satisfied:

- ECT indicates the engine has warmed up (typically 170 °F) or an ECT related fault is present.
- Enough "new" fuel has been consumed (typically 0.5 lb - vehicle dependant) to insure fuel is adequately mixed.
- The filtered value of short term fuel trim is in tight fuel control around stoichiometry, (typically +/- 2%) for at least 5 O2 sensor switches or AFRMOD is at a clip.
- The engine has been operated for a calibratable length of time, based on ECT temperature at start (typically 200 sec. at 40 °F and 30 sec at 200 °F) or an ECT related fault is present.
- The engine has been operating in closed loop fuel, with the brake off, within a calibratable (off-idle) air mass region (typically 2.4 to 8 lb/min) for 5 seconds, to minimize the effect of errors such as vacuum leaks.

Once the value of PM has stabilized (usually about 7 miles of driving), AFRMOD and PM are locked and deemed to be "mature." After PM is deemed "mature," normal fuel trim learning and purge control are re-enabled along with the fuel system monitor and evaporative system monitor. Any observed fueling errors from that point on are rolled into normal long term fuel trim (via adaptive fuel learning).

All remaining OBD-II monitors remain enabled unless AFR is observed to be changing. If AFR is changing, all monitors (except CCM and EGR) are disabled until the AFR stabilizes. This logic is same as was used for FFV applications that used a sensor. The AFR rate of change required to disable OBD-II monitor operation is typically 0.1 A/F (rate is based on the difference between a filtered value and the current value). For a fuel change from gasoline to E85 or vice versa, AFR typically stabilizes after 2 to 3 minutes on an FTP cycle.

If a large refueling event is detected (typically calibrated as a 40% to 50% increase in fuel level), the PCM strategy tries to assign the "new" fuel as gasoline or ethanol (E85) on the assumption that the only fuels available are either gasoline or E85. The strategy performs this fuel assignment to gasoline or ethanol (E85) only if the "old" and the "new" stabilized inferred fuel composition values are within a specified amount of each other (typically 5-10%), indicating that the fuel in the tank is the same as the fuel that was added and therefore must be either gasoline or ethanol (E85). If the "old" and "new" stabilized inferred fuel composition values are not near each other, the fuel added must be different from what was in the tank and the strategy retains the current inferred value of PM until the next refuel. By assigning the fuel to gasoline or ethanol (E85) in this manner, normal fuel system errors can be learned into normal long term fuel trip for proper fuel system error diagnosis.

After a battery disconnect or loss of Keep Alive Memory, the strategy will infer AFR immediately after going into closed loop fuel operation. A vehicle that previously had fuel system errors learned into long term fuel trim will infer incorrect values of AFR. After the value of AFR is determined, it is fixed until the next refueling event. If the next refueling event is performed with the same fuel (either E85 or gasoline), the value of AFR will not change. The fuel is then assigned to be E85 or gasoline as explained above. The long term fuel trim will again be a reliable indication of normal fuel system errors.

Only one large tank fill is required to assign the fuel as being either gasoline or ethanol, if the inferred AFR did not change significantly. If AFR did change significantly, several tank fills with the same fuel may be necessary to assign the fuel as gasoline or ethanol.

As the vast majority of vehicles are expected to be operated with gasoline, the initial value of AFR is set to gasoline. This is the starting point for the AFR after a battery disconnect and will allow for normal starting. Some vehicles may have E85 in the fuel tank after having a battery disconnect, and may not have a good start or drive away. The startability of alcohol-blended fuels at extreme cold temperatures (< 0 °F) is difficult under normal conditions; these vehicles may be required to be towed to a garage for starting if a battery disconnect occurs.

ED_002078G_00001322-00085

Front HO2S Monitor

Front HO2S Signal

The time between HO2S switches is monitored after vehicle startup when closed loop fuel has been requested, during closed loop fuel conditions and when open loop fuel has been requested due to an HO2S fault. Excessive time between switches with short term fuel trim at its limits (up to +/- 40%), or no switches since startup indicate a malfunction. Since "lack of switching" malfunctions can be caused by HO2S sensor malfunctions or by shifts in the fuel system, DTCs are stored that provide additional information for the "lack of switching" malfunction. Different DTCs indicate whether the sensor was always indicates lean/disconnected (P2195, P2197), or always indicates rich (P2196, P2198).

Characteristic Shift Downward (CSD) is a deviation from the normal positive voltage output of the HO2S signal to negative voltage output. During a full CSD, the HO2S signal shifts downward (negative) by 1 volt. CSD occurs when the reference chamber of the HO2S becomes contaminated, causing negative HO2S voltage to be generated. Even though CSD can occur in both front and rear HO2S signals, only the front HO2S are compensated for CSD. The CSD compensation algorithm must not be in the process of driving fuel to bring the HO2S out of CSD before running some of the HO2S monitors.

2005 MY and later vehicles monitor the HO2S signal for high voltage, in excess of 1.1 volts and store a (P0132, P0152) DTC. An over voltage condition is caused by a HO2S heater or battery power short to the HO2S signal line.

HO2S "Lack of Switching" Operation:	
DTCs	P2195 - Lack of switching, sensor indicates lean, Bank 1 P2196 - Lack of switching, sensor indicates rich, Bank 1 P2197 - Lack of switching, sensor indicates lean, Bank 2 P2198 - Lack of switching, sensor indicates rich, Bank 2
Monitor execution	continuous, from startup and while in closed loop fuel or open loop fuel due to HO2S fault
Monitor Sequence	None
Sensors OK	ECT, IAT, MAF, VSS, TP, ETC, FRP, DPFE EGR, VCT, VMV/EVMV, CVS, FTP, CKP, CMP, ignition coils, injectors, no misfire DTCs, no system failures affecting fuel, no EVAP gross leak failure, front HO2S heaters OK, no front HO2S over voltage
Monitoring Duration	30 seconds to register a malfunction

ED_002078G_00001322-00086

Typical HO2S "Lack of Switching" entry conditions:		
Entry condition	Minimum	Maximum
Closed Loop or Open Loop Requested due to HO2S fault		
Stream 1 HO2S not in CSD recovery mode		
No fuel flow entering thru PCV during cold start when flashing off fuel in oil (for O2 Sensor Stuck Rich DTCs only)		
Inferred Ambient Temperature	-40 °F	
Time within entry conditions	10 seconds	
Fuel Tank Pressure		10 in H_2O
Fuel Level	15%	
Battery Voltage	11.0 Volts	18.0 Volts

Typical HO2S "Lack of Switching" malfunction thresholds:
< 5 switches since startup for > 30 seconds in test conditions or > 30 seconds since last switch while closed loop fuel

HO2S "Over Voltage Test" Operation:	
DTCs	P0132 Over voltage, Bank 1 P0152 Over voltage, Bank 2
Monitor execution	Continuous
Monitor Sequence	None
Sensors OK	front HO2S heaters OK
Monitoring Duration	10 seconds to register a malfunction

Typical HO2S "Over Voltage Test" entry conditions:		
Entry condition	Minimum	Maximum
Inferred Stream 1 HO2S temperature	400 °F	
Battery Voltage	11.0 Volts	18.0 Volts

Typical HO2S "Over Voltage Test" malfunction thresholds:
> 1.1 volts for 10 seconds for over voltage test

The HO2S is also tested functionally. The response rate is evaluated by entering a special 1.5 Hz. square wave, fuel control routine. This routine drives the air/fuel ratio around stoichiometry at a calibratable frequency and magnitude, producing predictable oxygen sensor signal amplitude. A slow sensor will show reduced amplitude. Oxygen sensor signal amplitude below a minimum threshold indicates a slow sensor malfunction. (P0133 Bank 1, P0153 Bank 2). If the calibrated frequency was not obtained while running the test because of excessive purge vapors, etc., the test will be run again until the correct frequency is obtained.

HO2S Response Rate Operation:	
DTCs	P0133 (slow response Bank 1) P0153 (slow response Bank 2)
Monitor execution	once per driving cycle
Monitor Sequence	> 30 seconds time in lack of switch test
Sensors OK	ECT, IAT, MAF, VSS, TP, ETC, FRP, DPFE EGR, VCT, VMV/EVMV, CVS, FTP, CKP, CMP, ignition coils, injectors, no misfire DTCs, no system failures affecting fuel system, no EVAP gross leak failure, no "lack of switching" malfunctions, front HO2S heaters OK no front HO2S over voltage
Monitoring Duration	6 seconds

Typical HO2S response rate entry conditions:		
Entry condition	Minimum	Maximum
Stream 1 HO2S not in CSD recovery mode		
Flex Fuel Composition not changing		
Not in Phase 0 of Evaporative System Monitor		
No Purge System reset		
Purge intrusive test not running		
Not performing CSER spark retard		
Engine Coolant Temp	150 °F	240 °F
Intake Air Temp		140 °F
Time since entering closed loop fuel	10 seconds	
Inferred Catalyst Midbed Temperature		1600 °F
Fuel Level	15%	
Short Term Fuel Trim Range	-9%	11%
Short Term Fuel Trim Absolute Change while in monitor		10%
Engine Load	20%	50%
Maximum change in engine load while in monitor		0.13
Vehicle Speed	30 mph	80 mph
Maximum change in vehicle speed while in monitor		3 mph
Engine RPM	1000 rpm	2000 rpm
Maximum change in engine rpm while in monitor		150 rpm
Battery Voltage	11.0 Volts	18.0 Volts

ED_002078G_00001322-00088

Typical HO2Sresponse rate malfunction thresholds:
Voltage amplitude: < 0.5 volts

J1979 Front HO2S Mode $06 Data			
Monitor ID	Test ID	Description	
$01	$80	HO2S11 voltage amplitude and voltage threshold P0133/P0153)	Volts
$01	$01	H02S11 sensor switch-point voltage	Volts
$05	$80	HO2S21 voltage amplitude and voltage threshold P0133/P0153)	Volts
$05	$01	H02S21 sensor switch-point voltage	Volts

Front HO2S Heaters

The HO2S heaters are monitored for proper voltage and current. A HO2S heater voltage fault is determined by turning the heater on and off and looking for corresponding voltage change in the heater output driver circuit in the PCM.

A separate current-monitoring circuit monitors heater current once per driving cycle. The heater current is actually sampled three times. If the current value for two of the three samples falls below a calibratable threshold, the heater is assumed to be degraded or malfunctioning. (Multiple samples are taken for protection against noise on the heater current circuit.)

HO2S Heater Monitor Operation:	
DTCs Sensor 1	P0135 O2 Heater Circuit, Bank 1 P0155 O2 Heater Circuit, Bank 2 P0053 O2 Heater Resistance, Bank 1 P0059 O2 Heater Resistance, Bank 2
Monitor execution	once per driving cycle for heater current, continuous for voltage monitoring
Monitor Sequence	Heater current monitor: Stream 1 HO2S/UEGO response test complete (2010 MY and earlier), Stream 2 and 3 HO2S functional tests complete (2010 MY and earlier), HO2S/UEGO heater voltage check complete
Sensors OK	Heater current monitor: no HO2S/UEGO heater voltage DTCs
Monitoring Duration	< 10 seconds for heater voltage check, < 5 seconds for heater current check

Typical HO2S heater monitor entry conditions:		
Entry condition	Minimum	Maximum
Inferred HO2S 1 Temperature (heater voltage check only)	150 °F	1250 °F
Inferred HO2S 1 Temperature (heater current check only)	250 °F	1250 °F
HO2S 1/2/3 heater-on time (heater current check only)	30 seconds	
Engine RPM (heater current check only)		5000 rpm
Battery Voltage (heater voltage check only)	11.0	18.0 Volts

Typical HO2S heater check malfunction thresholds:	
Smart driver status indicated malfunction	
Number monitor retries allowed for malfunction > = 30	
Heater current outside limits:	< 0.220 Amps or > 3 Amps, (NTK)
	< 0.400 Amps or > 3 Amps, (Bosch)
	< 0.465 Amps or > 3 Amps, (NTK Fast Light Off)
	< 0.230 Amps or > 3 Amps, (Bosch Fast Light Off)

J1979 HO2S Heater Mode $06 Data			
Monitor ID	Test ID	Description	Units
$41	$81	HO2S11 Heater Current (P0053)	Amps
$45	$81	HO2S21 Heater Current (P0059)	Amps

ED_002078G_00001322-00091

HO2S Monitor

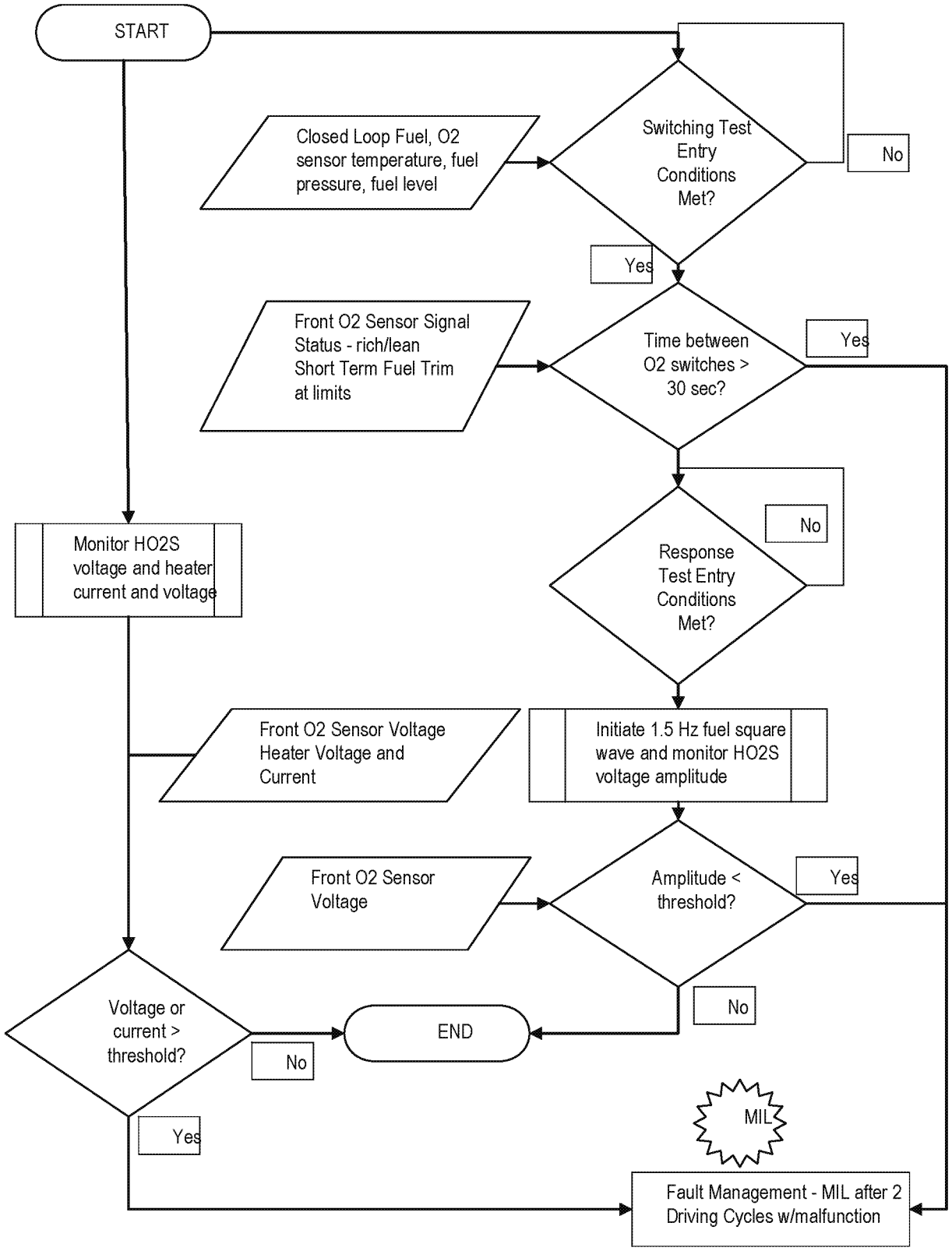

ED_002078G_00001322-00092

Front UEGO Signal

The UEGO sensor infers an air fuel ratio relative to the stoichiometric (chemically balanced) air fuel ratio by balancing the amount of oxygen pumped in or out of a measurement chamber. As the exhaust gasses get richer or leaner, the amount of oxygen that must be pumped in or out to maintain a stoichiometric air fuel ratio in the measurement chamber varies in proportion to the air fuel ratio. By measuring the current required to pump the oxygen in or out, the air fuel ratio (lambda) can be estimated. Note that the measured air fuel ratio is actually the output from the UEGO ASIC pumping current controller and not a signal that comes directly from the sensor.

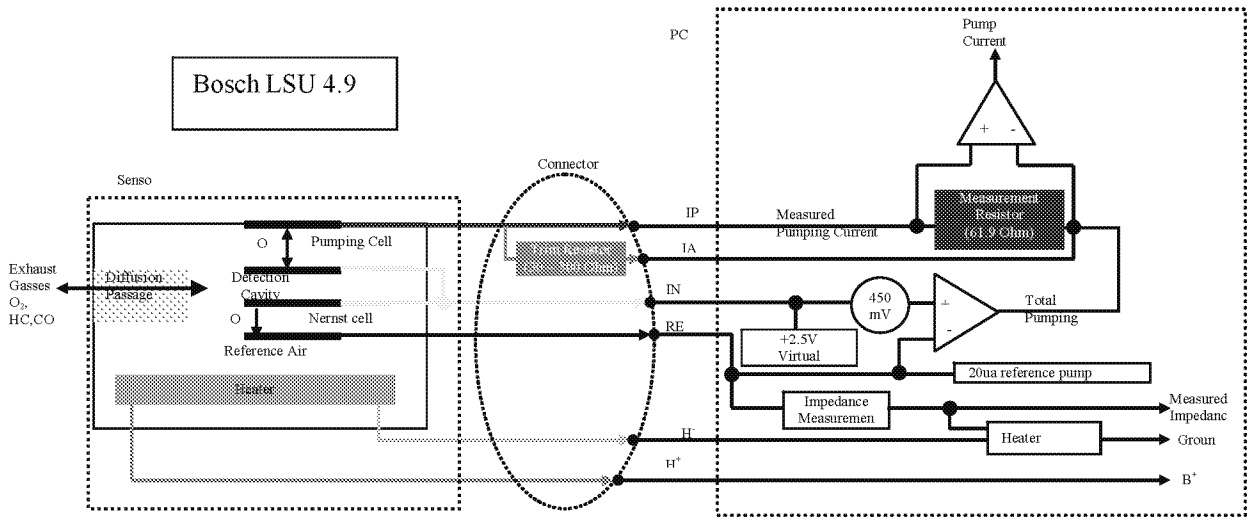

Bosch UEGO sensor interface:

IP – primary pumping current that flows through the sensing resistor
IA – current flow through trim resistor in parallel with sense resistor.
VM – Virtual ground, approximately 2.5 volts above PCM ground.
RE – Nernst cell voltage, 450mv from VM. Also carries current for pumped reference.
H+ – Heater voltage – to battery.
H- – Heater ground side – Duty cycle on/off to control sensor temperature.

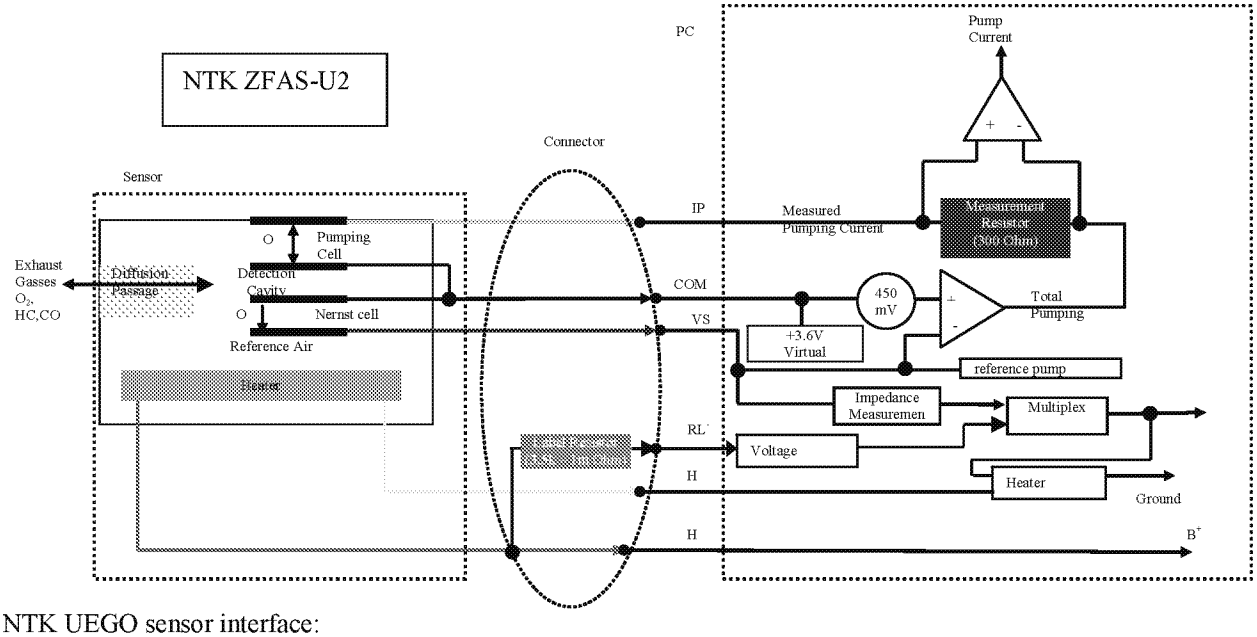

NTK UEGO sensor interface:

IP – primary pumping current that flows through the sensing resistor
COM – Virtual ground, approximately 3.6 volts above PCM ground.
VS – Nernst cell voltage, 450mv from COM. Also carries current for pumped reference.
RL - Voltage input from label resistor.
H+ – Heater voltage – to battery.
H- – Heater ground side – Duty cycle on/off to control sensor temperature.

The primary component of a UEGO sensor is the diffusion passage that controls the flow of exhaust gasses into a detection cavity, a Nernst cell (essentially an EGO sensor inside the UEGO sensor) that measures the air fuel ratio in the detection cavity. A control circuitry in the ASIC chip (mounted in the PCM) controls the pumping current (IP) to keep the detection cavity near stoichiometry by holding the Nernst cell at 450 mV. This Nernst cell voltage (RE, VS) is 450mV from the virtual ground (VM, COM), which is approximately 2.5V (Bosch UEGO) or 3.6V (NTK UEGO) above the PCM ground. For the Nernst cell to generate a voltage when the detection cavity is rich, it needs an oxygen differential across the cell. In older UEGO (and HEGO) sensor designs, this was provided by a reference chamber that was connected to outside air through the wire harness that was subject to contamination and "Characteristic Shift Down (CSD)". The new UEGO sensor uses a pumped reference chamber, which is sealed from the outside to eliminate the potential for contamination. The necessary oxygen is supplied by supplying a 20 uA pumping current across the Nernst cell to pump small amounts of oxygen from the detection cavity to the reference chamber. The pumping cell pumps oxygen ions in and out of the detection cavity from and to the exhaust gasses in response to the changes in the Nernst cell voltage. The pumping current flows through the sense resistor and the voltage drop across the sense resistor is measured and amplified. Offset volts are sent out of the ASIC to one of the PCM's A/D inputs. The PCM measures the voltage supplied by the ASIC, determines the pumping current, and converts the pumping current to measured lambda. In general, the circuitry that measures the pumping current is used to estimate the air fuel ratio in the exhaust system.

The UEGO sensor also has a trim (IA) or label resistor (RL). The biggest source of part to part variability in the measured air fuel ratio is difference in the diffusion passage. This source of variation is simply the piece-to-piece differences from the manufacturing process. To compensate for this source of error, each sensor is tested at the factory and a trim or label resistor is installed in the connector. The value of this resistor is chosen to correlate with the measured difference between a particular sensor and a nominal sensor.

ED_002078G_00001322-00094

For NTK UEGO, the variation in the Ip signal value is corrected for by a compensation coefficient (CC), and then processed by the PCM. The value of CC (Ip rank) is determined by the value of RL. The PCM must command the ASIC to read the value of RL, so CC can be determined. After measuring the value of the label resistor, the PCM software will multiply the measured pumping current (Ip) by a compensation coefficient and determine a corrected pumping current that is used to calculate the measured exhaust air fuel ratio. During each power up, the PCM will briefly turn the UEGO heater power off, measure the output voltage from the voltage divider several times, average it, and estimate the resistance of the label resistor. The PCM will do this estimation multiple times, and if all samples are consistently within one resistor "rank", then the RL compensation coefficient determination is completed and the resistor "rank" compensation coefficient value will be stored in keep alive memory. On the other hand, if the several readings are not consistently within one rank for some amount of time, then the PCM A/D input is considered not reliable/RL erratic, and a trim circuit erratic malfunction (P164A, P164B) will be set. Conversely, if the estimated resistance is too high, then the software in the PCM will indicate RL circuit shorted to ground or open, and a trim circuit low malfunction (P2627, P2630) will be set. If the estimated resistance is too low, then the software will indicate RL circuit shorted to power, and a trim circuit high malfunction (P2628, P2631) will be set. Once a trim circuit malfunction is detected, then the compensation coefficient of the label resistor "rank" stored in KAM will be used.

For Bosch UEGO, the trim resistor is connected in parallel to the pumping current sense resistor and the pumping current flows through both. The trim resistor adjusts the measured pumping current back to the expected nominal value at any given air fuel ratio (correcting for the sensor to sensor variations in the diffusion passage). Small trim resistors are required for sensors that require more pumping current at any particular lambda. Conversely, for sensors with lower diffusion rates than average, less pumping current is required, so a higher than average impedance trim resistor is installed. When IA circuit is open, all of the pumping current flows through the measuring resistor which increases the measured voltage. Since the pumping current is amplified, the UEGO pumping current to lambda transfer function will reflect the error. The slope of the UEGO sensor transfer function changes, which results in the wrong output of the UEGO signal (the slope of the pumping current to lambda relationship can increase or decrease). For "stoichiometric" air/fuel control applications, an open IA circuit is not monitored since the lambda error is minimal in "stoichiometric" mode. A worst case (40 ohm resistor) open IA was tested on a 2008 MY 3.5L Taurus PZEV and showed no impact on tailpipe emissions.

The time spent at the limits of the short term fuel trim is monitored after vehicle startup when closed loop fuel has been requested, during closed loop fuel conditions, or when open loop fuel has been requested due to UEGO sensor fault. Excessive time with short term fuel trim at its limits (up to +/- 40%), or no rich / lean activity seen since startup indicates a "lack of switch" malfunction. Since “lack of switching” malfunctions can be caused by UEGO sensor malfunctions or by shifts in the fuel system, DTCs are stored that provide additional information for the “lack of switching” malfunction. Different DTCs indicate whether the sensor always indicates lean (P2195, P2197), or always indicates rich (P2196, P2198).

UEGO “Lack of Switching” Operation:	
DTCs	P2195 – Lack of switching, sensor indicates lean, Bank 1 P2196 – Lack of switching, sensor indicates rich, Bank 1 P2197 – Lack of switching, sensor indicates lean, Bank 2 P2198 – Lack of switching, sensor indicates rich, Bank 2
Monitor execution	continuous, from startup and while in closed loop fuel or open loop fuel due to UEGO sensor fault
Monitor Sequence	None
Sensors OK	ECT, IAT, MAF, MAP, VSS, TP, ETC, FRP, FVR, DPFE EGR, VCT, VMV/EVMV, CVS, CPV, EVAPSV, FTP, CKP, CMP, ignition coils, injectors, no misfire DTCs, no system failures affecting fuel, no EVAP gross leak failure, UEGO heaters OK, no "lack of movement" malfunction, no UEGO circuit malfunction
Monitoring Duration	30 seconds to register a malfunction

Typical UEGO “Lack of Switching" entry conditions:		
Entry condition	Minimum	Maximum
Closed Loop or Open Loop Requested due to UEGO sensor fault		
No fuel flow entering thru PCV during cold start when flashing off fuel in oil (for O2 Sensor Stuck Rich DTCs only)		
Inferred Ambient Temperature	-40 °F	
Time within entry conditions	10 seconds	
Fuel Tank Pressure		10 in H_2O
Fuel Level	15%	
UEGO ASIC not in recalibration mode		
No air passing through during valve overlap (scavenging).		
Battery Voltage	11.0 Volts	18.0 Volts

Typical UEGO “Lack of Switching” malfunction thresholds:
Stage 1: > 30 seconds since reaching the short term fuel trim limits while closed loop fuel. Stage 2: < 0.5 seconds rich or < 0.5 seconds lean since startup for > 30 seconds in test conditions while open loop fuel is requested due to UEGO sensor fault.

For Bosch UEGO applications, the time spent when the measured lambda is nearly 1.0 is also monitored after vehicle startup when closed loop fuel has been requested, during closed loop fuel conditions, or when open loop fuel has been requested due to UEGO sensor fault. Excessive time without measured lambda deviating from 1.0, in spite of attempts to force activity (via fuel control and reference current "defib") in the measured lambda, will indicate either a "lack of movement – open Pump Current circuit" malfunction or a "lack of movement - open Reference Ground circuit" malfunction. An open Pump Current circuit (IP) is differentiated from an open Reference Ground circuit (VM) by measuring the movements in the measured lambda during the reference current defib. Change in lambda movement below a minimum threshold indicates "lack of movement- open Pump Current circuit" malfunction, which results in P2237, P2240 DTCs (replaced P0134/P0154 DTCs). Conversely, change in lambda movement greater than the minimum threshold indicates an open VM, which results in P2251, P2254 DTCs (replaced P0130/P0150 DTCs). Note that the open VM detection via reference current defib is new in 2011 MY applications.

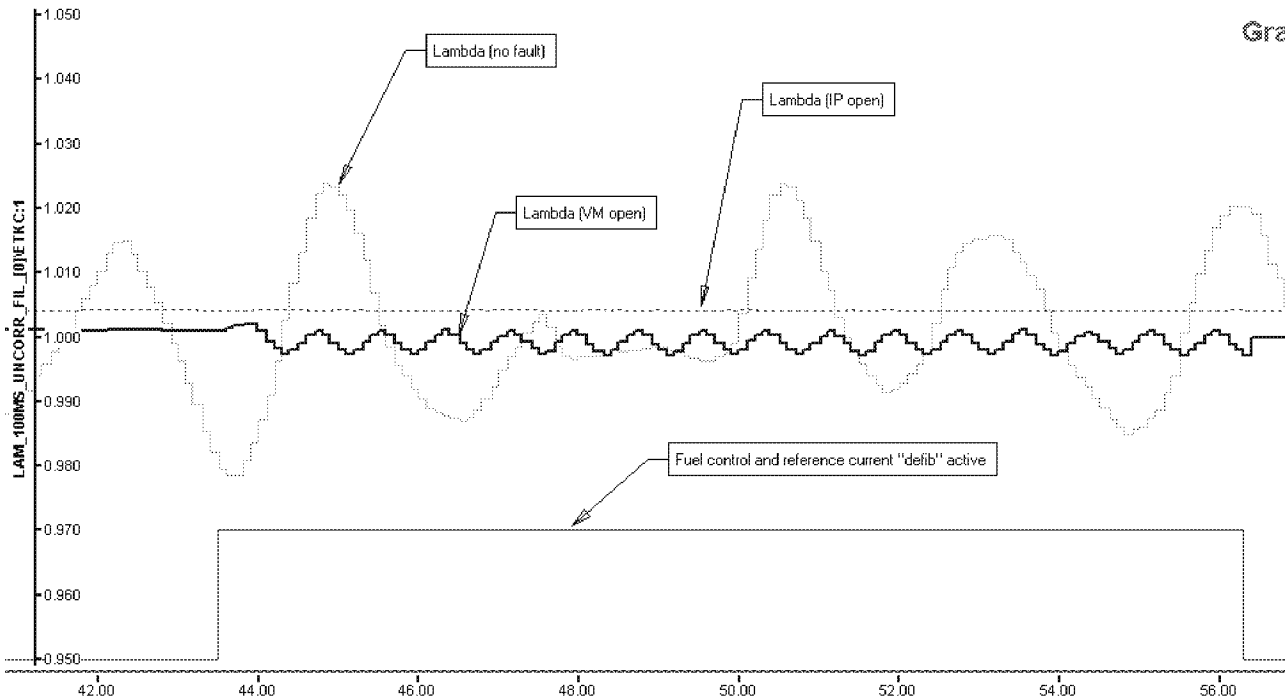

Since the Bosch CJ125 or the Conti-Siemens ATIC42 ASIC do not have the capability to specifically detect an open RE or VM, separate diagnostics were created to monitor these failures. An open RE or VM will typically cause the impedance of the Nernst cell to increase. An open RE will cause the UEGO voltage to be greater than or less than a malfunction threshold while an open VM will cause the UEGO voltage to be within a malfunction band. Note that this open VM detection will only enable if the UEGO is unable to control the heater voltage at the desired set point; otherwise, the "lack of movement- open Reference Ground circuit" diagnostic will enable.

UEGO "Open Circuit Diagnostic – RE, VM " Operation (Bosch UEGO only):	
DTCs	P2243 – O2 Sensor Reference Voltage Circuit/Open (Bank 1, Sensor 1). (replaces P0130) P2247 – O2 Sensor Reference Voltage Circuit/Open (Bank 2, Sensor 1). (replaces P0150) P2251 – O2 Sensor Negative Current Control Circuit/Open (Bank 1, Sensor 1) (replaces P0130) P2254 – O2 Sensor Negative Current Control Circuit/Open (Bank 2, Sensor 1) (replaces P0150)
Monitor execution	continuous
Monitor Sequence	Intrusive Stream 1 UEGO heater current monitor completed
Sensors OK	UEGO heaters OK, no UEGO circuit malfunction
Monitoring Duration	10 seconds to register a malfunction

Typical UEGO "Open Circuit Diagnostic – RE, VM " entry conditions (Bosch UEGO only):		
Entry condition	Minimum	Maximum
UEGO ASIC not in recalibration mode		
All injectors on (no Decel Fuel Shut Off)		
Short term fuel trim		33%
Time heater control voltage at maximum limit during open loop heater control		9 seconds (Bosch UEGO) 20 seconds (NTK UEGO)
Time heater control voltage at maximum or minimum limit during closed loop heater control		7 seconds (Bosch UEGO) 1 second (NTK UEGO)
Battery Voltage	11.0 Volts	18.0 Volts

Typical UEGO "Open Circuit Diagnostic – RE, VM" malfunction thresholds (Bosch UEGO only):
Open RE circuit: UEGO voltage: > 4.7 V or < 0.2 V for 10 seconds to set a DTC.
Open VM circuit: 1.45 V < UEGO voltage < 1.55 V for 10 seconds to set a DTC (Bosch CJ125). 1.95 V < UEGO voltage < 2.05 V for 10 seconds to set a DTC (Conti-Siemens ATIC42).

ED_002078G_00001322-00098

UEGO "Lack of Movement – Open Pump Current Circuit" Operation (Bosch UEGO only):	
DTCs	P2237 – O2 Sensor Positive Current Control Circuit/Open (Bank 1, Sensor 1) (replaces P0134) P2240 – O2 Sensor Positive Current Control Circuit/Open (Bank 2, Sensor 1) (replaces P0154)
Monitor execution	continuous, from startup and while in closed loop fuel or open loop fuel due to UEGO sensor fault
Monitor Sequence	None
Sensors OK	ignition coils, injectors, no misfire DTCs, no system failures affecting fuel, UEGO heaters OK, no "lack of switching" malfunction, no "lack of movement-open reference ground circuit" malfunction, no UEGO circuit malfunction
Monitoring Duration	10 - 20 seconds to register a malfunction

Typical UEGO "Lack of Movement – Open Pump Current Circuit " entry conditions (Bosch UEGO only):		
Entry condition	Minimum	Maximum
Closed Loop or Open Loop Requested due to UEGO sensor fault		
Constant lambda near stoich (~1)	0.99	1.01
Time since no lambda activity seen since start up	30 sec	
Time since no lambda activity during intrusive Stream 1 response monitor	3 sec	
Inferred Ambient Temperature	- 40 °F	
Injector fuel pulsewidth	650 usec	
UEGO ASIC not in recalibration mode		
No air passing through during valve overlap (scavenging).		
Battery Voltage	11.0 Volts	18.0 Volts

Typical UEGO "Lack of Movement – Open Pump Current Circuit" malfunction thresholds (Bosch UEGO only):
Stage 1: > 20 seconds in test conditions without lambda movement during fuel control and reference current "defib" while in closed loop fuel and < = 0.05 change in lambda movement. Stage 2: < 0.2 seconds without lambda movement since startup for > 30 seconds in test conditions during reference current "defib" while open loop fuel is requested due to UEGO sensor fault and < = 0.05 change in lambda movement.

UEGO "Lack of Movement – Open Reference Ground Circuit " Operation (Bosch UEGO only):	
DTCs	P2251 – O2 Sensor Negative Current Control Circuit/Open (Bank 1, Sensor 1) (replaces P0130) P2254 – O2 Sensor Negative Current Control Circuit/Open (Bank 2, Sensor 1) (replaces P0150)
Monitor execution	continuous, from startup and while in closed loop fuel or open loop fuel due to UEGO sensor fault
Monitor Sequence	None
Sensors OK	ignition coils, injectors, no misfire DTCs, no system failures affecting fuel, UEGO heaters OK, no "lack of switching" malfunction, no "lack of movement-open pump current circuit" malfunction, no UEGO circuit malfunction
Monitoring Duration	10 - 20 seconds to register a malfunction

Typical UEGO "Lack of Movement – Open Reference Ground Circuit " entry conditions (Bosch UEGO only):		
Entry condition	Minimum	Maximum
Closed Loop or Open Loop Requested due to UEGO sensor fault		
Constant lambda near stoich (~1)	0.99	1.01
Time since no lambda activity seen since start up	30 sec	
Time since no lambda activity during intrusive Stream 1 response monitor	3 sec	
Injector fuel pulsewidth	650 usec	
UEGO ASIC not in recalibration mode		
No air passing through during valve overlap (scavenging).		
Battery Voltage	11.0 Volts	18.0 Volts

Typical UEGO "Lack of Movement – Open Reference Ground Circuit" malfunction thresholds (Bosch UEGO only):
Stage 1: > 20 seconds in test conditions without lambda movement during fuel control and reference current "defib" while in closed loop fuel and > 0.05 change in lambda movement. Stage 2: > 20 seconds in test conditions without lambda movement during reference current "defib" while open loop fuel is requested due to UEGO sensor fault and > 0.05 change in lambda movement.

UEGO equipped vehicles monitor the circuitry between the PCM and the UEGO sensor via the wire diagnostics capability included on the UEGO ASIC chip. The wire diagnostics will detect wires (IP, IA, VM/COM, RE/VS) shorted to battery, or ground, and in most cases will detect open circuits (IP, VM/COM, RE/VS). The diagnostic bits are transmitted to the PCM via SPI (serial peripheral interface). The SPI communication is validated continuously, and if a SPI communication failure is detected, fault code(s) P064D and/or P064E will be set. The ASIC is also capable of detecting internal circuitry failure; in which case, an ASIC failure DTC (P1646, P1647) along with the SPI communication failure DTC (P064D, P064E) will be set.

- Beginning 2011 MY, the general UEGO circuit diagnostic DTCs P0130/P0150, are now replaced by more specific DTCs.
- A shorted to ground circuit (Bosch UEGO – IP, IA, RE, VM; NTK UEGO – IP, VS, COM) will set P0131/P0151 DTCs.
- A shorted to battery circuit (Bosch UEGO – IP, IA, RE, VM; NTK UEGO – IP, VS, COM) will set P0132/P0152 DTCs.
- An open Pump Current circuit (IP) will set P2237/P2240 DTCs.
- An open Reference Ground circuit (VM/COM) will set P2251/P2254 DTCs.
- An open Reference Voltage circuit (RE/VS) will set P2243/P2247 DTCs.

UEGO "Wire Diagnostic via ASIC" Operation:	
DTCs	P0131 – O2 circuit low voltage (Bank 1, Sensor 1). (Note: Sets for short to ground on Bosch UEGO- IP, IA, RE, VM; NTK UEGO – IP, VS, COM. Replaces P0130 in Bosch UEGO applications.) P0151 – O2 circuit low voltage (Bank 2, Sensor 1). (Note: Sets for short to ground on Bosch UEGO- IP, IA, RE, VM; NTK UEGO – IP, VS, COM. Replaces P0150 in Bosch UEGO applications.) P0132 – O2 circuit high voltage (Bank 1, Sensor 1). (Note: Sets for short to battery on Bosch UEGO- IP, IA, RE, VM; NTK UEGO – IP, VS, COM. Replaces P0130 in Bosch UEGO applications.) P0152 – O2 circuit high voltage (Bank 2, Sensor 1). (Note: Sets for short to battery on Bosch UEGO- IP, IA, RE, VM; NTK UEGO – IP, VS, COM. Replaces P0150 in Bosch UEGO applications. P2237 – O2 Sensor Positive Current Control Circuit/Open (Bank 1, Sensor 1). (Note: This DTC sets for open IP. Replaces P0130 in NTK UEGO applications. P2240 – O2 Sensor Positive Current Control Circuit/Open (Bank 2, Sensor 1). (Note: Sets for open IP. Replaces P0150 in NTK UEGO applications). P2243 – O2 Sensor Reference Voltage Circuit/Open (Bank 1, Sensor 1). (Note: Sets for open VS. Replaces P0130 in NTK UEGO applications). P2247 – O2 Sensor Reference Voltage Circuit/Open (Bank 2, Sensor 1). (Note: Sets for open VS. Replaces P0150 in NTK UEGO applications). P2251 – O2 Sensor Negative Current Control Circuit/Open (Bank 1, Sensor 1). (Note: Sets for open COM. Replaces P0130 in NTK UEGO applications). P2254 – O2 Sensor Negative Current Control Circuit/Open (Bank 2, Sensor 1). (Note: Sets for open COM. Replaces P0150 in NTK UEGO applications). P164A – O2 sensor positive current trim circuit performance (Bank 1, Sensor 1). (Note: Sets for an erratic RL in NTK UEGO applications only).

	P164B – O2 sensor positive current trim circuit performance (Bank 2, Sensor 1). (Note: Sets for an erratic RL in NTK UEGO applications only). P2627 – O2 sensor positive current trim circuit low (Bank 1, Sensor 1). (Note: Sets for open or short to ground RL in NTK UEGO applications only). P2630 – O2 sensor positive current trim circuit low (Bank 2, Sensor 1). (Note: Sets for open or short to ground RL in NTK UEGO applications only). P2628 – O2 sensor positive current trim circuit high (Bank 1, Sensor 1). (Note: Sets for short to battery RL in NTK UEGO applications only). P2631 – O2 sensor positive current trim circuit high (Bank 2, Sensor 1). (Note: Sets for short to battery RL in NTK UEGO applications only). P1646 – Linear O2 sensor control chip, Bank 1. P1647 – Linear O2 sensor control chip, Bank 2. P064D – Internal control module O2 sensor processor performance (Bank 1). P064E – Internal control module O2 sensor processor performance (Bank 2).
Monitor execution	continuous
Monitor Sequence	None
Sensors OK	UEGO heaters OK
Monitoring Duration	10 seconds to register a malfunction

Typical UEGO "Wire Diagnostic via ASIC" entry conditions:		
Entry condition	Minimum	Maximum
Fault reported by UEGO ASIC		
Battery Voltage	11.0 Volts	18.0 Volts

Typical UEGO "Wire Diagnostic via ASIC " malfunction thresholds:
UEGO ASIC indicated malfunction, DTC sets after 10 seconds when circuit failure is present.

For "Non-Stoichiometric Closed Loop (NSCL)" air/fuel control applications, a continuous open IA diagnostics (Air Rationality Test) is required since the lambda error is more significant in this mode. The air rationality test will always monitor the UEGO sensor voltage or pumping current reading during Decel Fuel Shut Off (DFSO) event. The monitor compares the UEGO sensor voltage or pumping current reading in air against the expected value for pure air. If the UEGO sensor voltage or pumping current during DFSO exceeds the maximum UEGO voltage/pumping current in air threshold, then the fault timer increments. If the fault timer exceeds the fault time threshold, then open IA DTC P2626 and/or P2629 will set. Since transient sources of fuel in the exhaust after injector cut can contribute to the UEGO sensor voltage/pumping current to read lower (rich), the air rationality monitor will not call a pass until the transient sources of fuel have been exhausted and pure air entry conditions during DFSO are met (i.e. all injectors must be off, purge must be off, no fuel must be leaking around the PCV valve, and a few transport delays must have passed to allow the last fuel transients to be exhausted leaving nothing for the sensor to see, but air). Note: Beginning 2011 MY and beyond, this diagnostics will monitor the UEGO pumping current against the expected value for pure air instead of the UEGO voltage so the monitor can be ASIC chip independent.

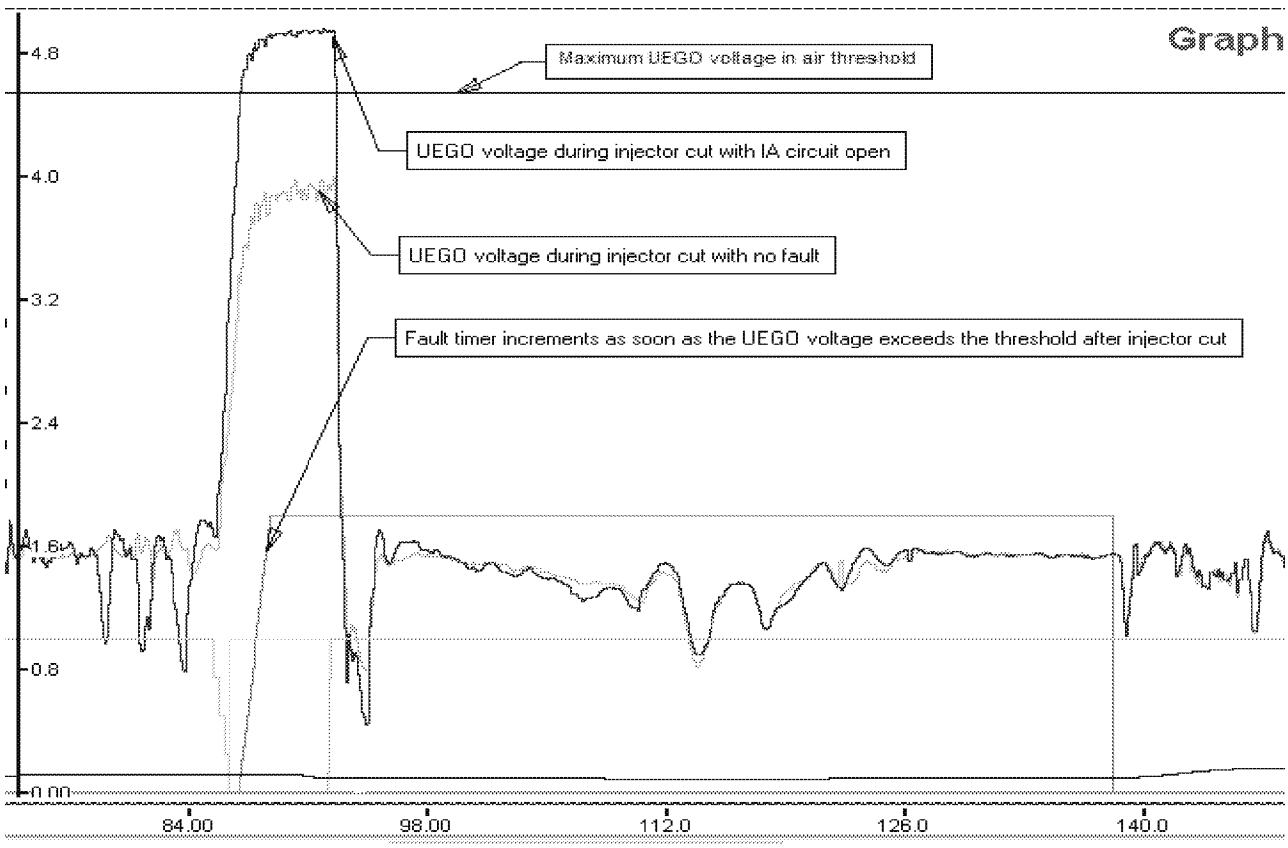

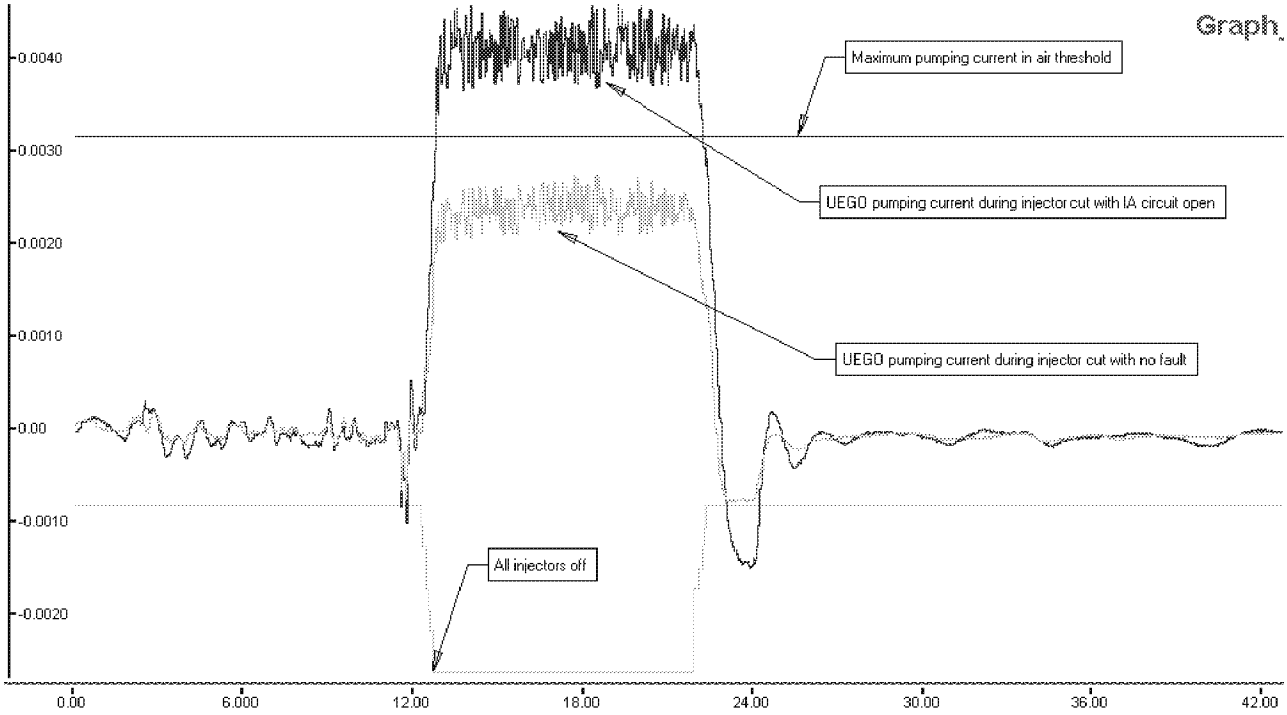

UEGO "Air Rationality Test" Operation (Bosch UEGO only):	
DTCs	P2626 – O2 sensor positive current trim circuit open (Bank 1, Sensor 1) P2629 – O2 sensor positive current trim circuit open (Bank 2, Sensor 1)
Monitor execution	continuous, every DFSO event
Monitor Sequence	Stream 1 UEGO heater voltage check complete, > 30 seconds time in lack of movement test, > 30 seconds time in lack of switch test
Sensors OK	FTP, injectors, UEGO heaters OK, no "lack of switching" malfunction, no "lack of movement" malfunction, no purge system failure, no UEGO circuit malfunction, no UEGO FAOS monitor malfunction, no front UEGO response rate malfunction
Monitoring Duration	2 seconds to register a malfunction

Typical UEGO "Air Rationality Test" entry conditions (Bosch UEGO only):		
Entry condition	Minimum	Maximum
No injectors stuck open		
No purge system failure		
Fuel Tank Pressure		10 in H_2O
Closed pedal		
DFSO entry conditions met		
DFSO requested		
DFSO injectors cut		
No purge flow being requested (pass criteria only)		
No fuel flow entering thru PCV during cold start when flashing off fuel in oil (pass criteria only)		
Transport delay (pass criteria only)	2 sec	
UEGO ASIC not in recalibration mode		
Battery Voltage	11.0 Volts	18.0 Volts

Typical UEGO "Air Rationality Test" malfunction thresholds (Bosch UEGO only):
UEGO voltage: > 4.55 V (max UEGO sensor voltage in air, normal range) or > 3.0 V (max UEGO sensor voltage in air, wide range) for >= 2 seconds in test conditions. UEGO pumping current: > 0.00309 Amps for >= 2 seconds in test conditions.

ED_002078G_00001322-00105

Front UEGO Slow/Delayed Response Monitor (2010 MY+)

The front UEGO monitor also detects malfunctions on the UEGO sensor such as reduced response or delayed response that would cause vehicle emissions to exceed 1.5x the standard (2.5x the standard for PZEV). The response rate is evaluated by entering a special 0.5 Hz square wave, fuel control routine. This routine drives the air/fuel ratio around stoichiomentry at a calibratable frequency and magnitude, producing predictable oxygen sensor signal amplitude.

A UEGO slow or delayed sensor will show an increased response time which is compared to a no-fault polygon. Combinations of the rich to lean and lean to rich response times that fall outside the polygon indicate a sensor malfunction (P0133 Bank 1, P0153 Bank 2).

UEGO "Response Rate" Operation:	
DTCs	P0133 (slow/delayed response Bank 1), P0153 (slow/delayed response Bank 2)
Monitor execution	once per driving cycle
Monitor Sequence	> 30 seconds time in lack of movement test, > 30 seconds time in lack of switch test
Sensors OK	ECT, IAT, MAF, MAP, VSS, TP, ETC, FRP, FVR, DPFE EGR, VCT, VMV/EVMV, CVS, CPV, EVAPSV, FTP, CKP, CMP, ignition coils, injectors, no misfire DTCs, no system failures affecting fuel, no EVAP gross leak failure, UEGO heaters OK, no "lack of switching" malfunction, no "lack of movement" malfunction, no UEGO circuit malfunction, no UEGO FAOS monitor malfunction
Monitoring Duration	12 seconds

ED_002078G_00001322-00106

Typical UEGO "Response Rate" entry conditions:		
Entry condition	Minimum	Maximum
Flex Fuel Composition not changing		
Not in Phase 0 of Evap Monitor, Purge intrusive test not running		
No Purge System reset		
Not performing CSER spark retard		
Not performing intrusive UEGO Lack of Movement "defib"		
No IMRC transition in progress before entering the monitor and while in monitor		
Engine Coolant Temp	150 °F	240 °F
Intake Air Temp		140 °F
Time since entering closed loop fuel	10 seconds	
Inferred Catalyst Midbed Temperature		1600 °F
Fuel Level	15%	
Short Term Fuel Trim Range	-5%	5%
Short Term Fuel Trim Absolute Change while in monitor		15%
Air Mass	1.2 lbs/min	
Engine Load	20%	70%
Maximum change in engine load while in monitor		0.25
Vehicle Speed	35 mph	80 mph
Maximum change in vehicle speed while in monitor		9 mph
Engine RPM	1000 rpm	3000 rpm
Maximum change in engine rpm while in monitor		150 rpm
Commanded versus actual lambda range while in monitor	0.85	1.15
No excessive cam angle movement over a half cycle A/F modulation when exhaust cam position is >= 40 degree or intake cam position >= -10 degree to indicate an acceptable A/F disturbance due to cam angle movement.		3 degree
No excessive movement between currently utilized long term fuel trim cells (1 = complete change from one cell to adjacent cell)		0.5
UEGO ASIC not in recalibration mode		
No air passing through during valve overlap (scavenging).		
Battery Voltage	11.0 Volts	18.0 Volts

ED_002078G_00001322-00107

Typical UEGO "Response Rate" malfunction thresholds:

Threshold depends on failure type (symmetric slow/delay vs. Asymmetric slow/delay)

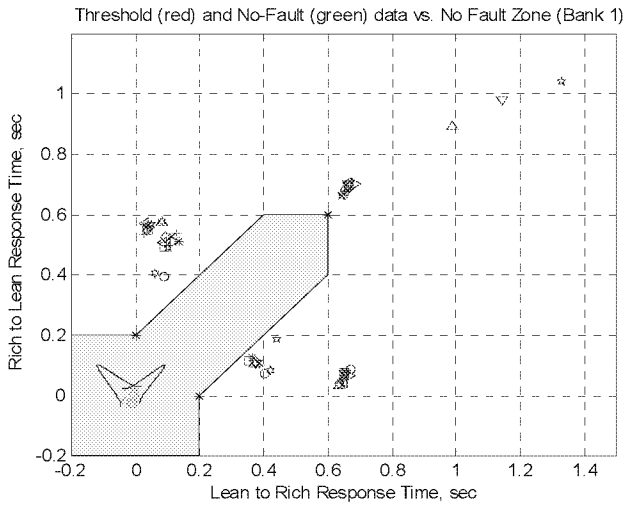

Example shown with lean-to-rich (0.2 sec), rich-to-lean (0.2 sec), and symmetric (0.6 sec) thresholds creating the yellow no-fault zone. The completeted monitor results in two measurements, a lean-to-rich response time and a rich-to-lean response time. These response time values are used as x-y pairs to make a single point and then compared to the no-fault zone. Anywhere in the yellow is a pass and outside the yellow is a failure.

J1979 Front UEGO Mode $06 Data

Monitor ID	Test ID	Description	
$01	$87	UEGO11 Rich to Lean Response Time (P0133)	seconds
$01	$88	UEGO11 Lean to Rich Response Time (P0133)	seconds
$05	$87	UEGO21 Rich to Lean Response Time (P0153)	seconds
$05	$88	UEGO21 Lean to Rich Response Time (P0153)	seconds

ED_002078G_00001322-00108

UEGO Heaters

The UEGO heater is controlled as a function of the measured impedance to keep the sensor at a near constant temperature (Bosch: 780 deg C, NTK: 830 deg C). The impedance of the Nernst cell decreases as the sensor temperature increases. This impedance is measured by periodically applying a small current across the Nernst cell and measuring the change in the voltage. The output voltage is then sent to an A/D input on the PCM. After a cold start, the UEGO heater ramps up to the maximum duty cycle to heat the sensor. After a few seconds, the measured impedance will start to decrease and when the target value is crossed, the heater goes into closed loop heater control to maintain the sensor at a near constant temperature.

The "UEGO Heater Temperature Control Monitor" tracks the time at the maximum duty cycle during the open loop sensor warm up phase. If the measured impedance does not come down to the target value to allow the system to transition from open loop heater control to closed loop heater control within a specified time, then a fault code is set. This monitor also sets a malfunction when the closed loop heater control reaches a maximum or minimum value for a period of time indicating that the controller is no longer able to maintain the target temperature,; however, if the inferred exhaust temperature is high enough that the sensor will be above the target temperature even with no heat, then this monitor is disabled.

The UEGO heaters are also monitored for proper voltage and current. A UEGO heater voltage fault (open, shorted to ground, or shorted to battery) is determined by turning the heater on and off and looking for corresponding voltage change in the heater output driver circuit in the PCM.

A separate current-monitoring circuit monitors heater current once per driving cycle. This monitor normally runs in closed loop heater control after all the exhaust gas sensor functional tests are completed (2010 MY and earlier), however, it can also run intrusively. When the UEGO sensor indicates cold, but the heater is inferred to have been adequately warm, the current monitor is forced to run intrusively prior to the completion of the heater temperature control monitor. The heater current is actually sampled once to three times. Multiple samples are taken for protection against noise on the heater current circuit. If the majority of the current samples fall below or above a calibratable threshold, the heater is assumed to be degraded or malfunctioning.

Beginning 2012MY, some PCMs do not have a separate current-monitoring circuit. For PCMs that do not have the current-monitoring circuit, a degraded or malfunctioning UEGO heater is detected by the "UEGO Heater Temperature Control Monitor".

ED_002078G_00001322-00109

UEGO Heater Monitor Operation:	
DTCs	P0030 Heater Temperature Control Failure, Bank 1 P0050 Heater Temperature Control Failure, Bank 2 P0135 O2 Heater Circuit, Bank 1 P0155 O2 Heater Circuit, Bank 2 P0053 O2 Heater Resistance, Bank 1 P0059 O2 Heater Resistance, Bank 2
Monitor execution	once per driving cycle for heater current monitor, continuous for voltage monitoring and heater temperature control monitoring
Monitor Sequence	Heater current monitor: Stream 1 UEGO response test complete (2010 MY and earlier), Stream 2 and 3 HO2S functional tests complete (2010 MY and earlier), Stream 1 UEGO heater voltage check complete. Heater temperature control monitor: intrusive heater current monitor completed.
Sensors OK	Heater current monitor: no HO2S/UEGO heater circuit malfunction, no UEGO heater temperature control malfunction, no UEGO circuit malfunction Heater temperature control monitor: no UEGO circuit malfunction, no UEGO heater circuit malfunction, no UEGO heater current monitor DTCs.
Monitoring Duration	< 10 seconds for heater voltage check, < 5 seconds for heater current check, >= 30 seconds for the heater temperature control monitor to register a malfunction

Typical UEGO heater monitor entry conditions:		
Entry condition	Minimum	Maximum
Inferred UEGO unheated tip temperature (heater voltage check only)	75 °F	1562 °F
Inferred UEGO heated tip temperature (heater current check only)	1346 °F	1526 °F
UEGO heater-on time (heater current check only)	30 seconds	
Engine RPM (heater current check only)		5000 rpm
Time heater control voltage at maximum limit during open loop heater control (intrusive heater current check only		9 seconds (Bosch UEGO) 20 seconds (NTK UEGO)
Time heater control voltage at maximum or minimum limit during closed loop heater control (intrusive heater current check only)		7 seconds (Bosch UEGO) 1 second (NTK UEGO)
Inferred UEGO unheated tip temperature (heater control monitor only)	75 °F	1000 °F
UEGO ASIC not in recalibration mode		
Battery Voltage	11.0 Volts	18.0 Volts

Typical UEGO heater check malfunction thresholds:
Smart driver status indicated malfunction (heater voltage check) Number monitor retries allowed for malfunction > = 30 (heater voltage check) Heater current outside limits: < 1.0 Amps or > 3 Amps (intrusive test) or < 0.55 Amps or > 3 Amps (Bosch UEGO) < 1.45 Amps or > 3 Amps (intrusive test) or < 1.05 Amps or > 3 Amps (NTK UEGO) < 1.62 Amps or > 3.80 Amps (intrusive test) or < 1.12 Amps or > 3.80 Amps (Conti-Moto CBP-A2 PCM with NTK UEGO) Heater temperature control monitor: > = 30 seconds to register a malfunction while the heater control integrator is at its maximum or minimum limit

J1979 UEGO Heater Mode $06 Data

Monitor ID	Test ID	Description	Units
$41	$81	HO2S11 Heater Current (P0053)	Amps
$45	$81	HO2S21 Heater Current (P0059)	Amps

ED_002078G_00001322-00111

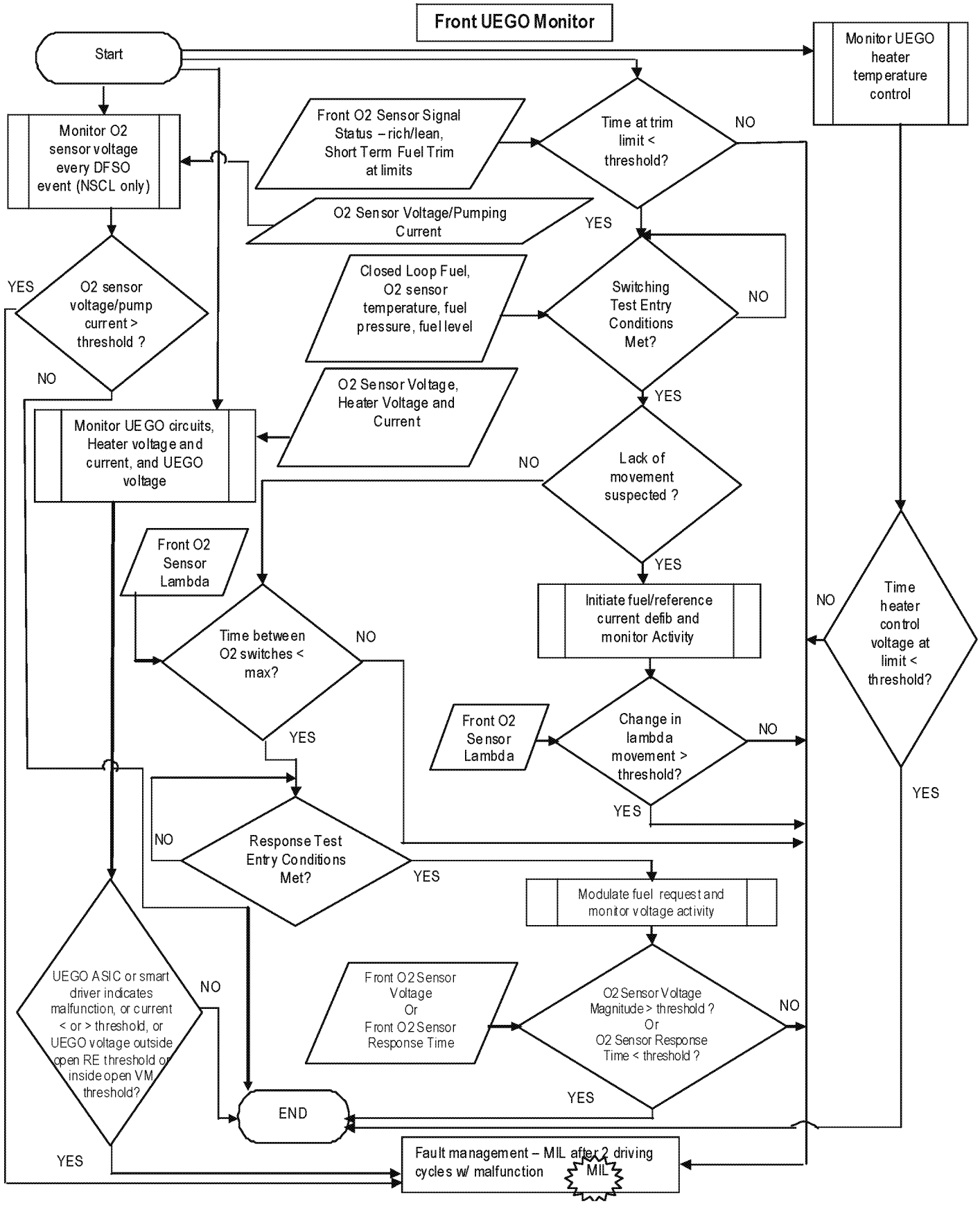
Front UEGO Monitor
Start
Monitor UEGO heater temperature control
Monitor O2 sensor voltage every DFSO event (NSCL only)
Front O2 Sensor Signal Status – rich/lean, Short Term Fuel Trim at limits
Time at trim limit < threshold?
NO
O2 Sensor Voltage/Pumping Current
YES
Closed Loop Fuel, O2 sensor temperature, fuel pressure, fuel level
Switching Test Entry Conditions Met?
NO
YES
O2 sensor voltage/pump current > threshold ?
NO
O2 Sensor Voltage, Heater Voltage and Current
Monitor UEGO circuits, Heater voltage and current, and UEGO voltage
YES
Lack of movement suspected ?
NO
YES
Front O2 Sensor Lambda
Initiate fuel/reference current defib and monitor Activity
Time heater control voltage at limit < threshold?
NO
YES
Time between O2 switches < max?
NO
YES
Front O2 Sensor Lambda
Change in lambda movement > threshold?
NO
YES
NO
Response Test Entry Conditions Met?
YES
Modulate fuel request and monitor voltage activity
UEGO ASIC or smart driver indicates malfunction, or current < or > threshold, or UEGO voltage outside open RE threshold or inside open VM threshold?
NO
Front O2 Sensor Voltage Or Front O2 Sensor Response Time
O2 Sensor Voltage Magnitude > threshold ? Or O2 Sensor Response Time < threshold ?
NO
YES
END
YES
Fault management – MIL after 2 driving cycles w/ malfunction
MIL

Rear HO2S Monitor

Rear HO2S Signal

A functional test of the rear HO2S sensors is done during normal vehicle operation. The peak rich and lean voltages are continuously monitored. Voltages that exceed the calibratable rich and lean thresholds indicate a functional sensor. If the voltages have not exceeded the thresholds after a long period of vehicle operation, the air/fuel ratio may be forced rich or lean in an attempt to get the rear sensor to switch. This situation normally occurs only with a green catalyst (< 500 miles). If the sensor does not exceed the rich and lean peak thresholds, a malfunction is indicated.

2005 MY and beyond vehicles will continuously monitor the rear HO2S signal for high voltage, in excess of 1.1 volts and store a unique DTC (P0138, P0158). An over voltage condition is caused by a HO2S heater or battery power short to the HO2S signal line.

2011 MY and beyond vehicles with Conti-Moto CBP-A2 PCM will also continuously monitor the rear HO2S signal for out of range low voltage, below -0.2 volts and store DTC P2A01, P2A04. An out of range low voltage condition is caused by swapped sensor wires (sensor signal and signal return) and sensor degradation.

Furthermore, the rear HO2S signal will also be monitored continuously for circuit open or shorted to ground beginning 2011 MY vehicles with Conti-Moto CBP-A2 PCM or Bosch Tri-core MED 17.x PCM. An intrusive circuit test is invoked whenever the HO2S voltage falls into a voltage fault band. A pull-up resistor is enabled to alter the HO2S circuit characteristics. A very high HO2S internal resistance, > 1 M ohms, will indicate an open HO2S circuit while a low HO2S internal resistance, < 10 ohms, will indicate a HO2S circuit shorted to ground. Both HO2S circuit open and shorted to ground malfunction will set DTC P0137, P0157 if the fault counter exceeds the threshold.

Rear HO2S Functional Check Operation:	
DTCs Sensor 2	P0136 HO2S12 No activity or P2270 HO2S12 Signal Stuck Lean P2271 HO2S12 Signal Stuck Rich P0156 HO2S22 No activity or P2272 HO2S22 Signal Stuck Lean P2273 HO2S22 Signal Stuck Rich
Monitor execution	once per driving cycle for activity test
Monitor Sequence	> 30 seconds time in lack of movement test (UEGO only), > 30 seconds time in lack of switch test, front HO2S/UEGO response test complete, Stream 2 HO2S circuit open/short to ground test time slice complete.
Sensors OK	ECT, IAT, MAF, MAP, VSS, TP, ETC, FRP, FVR, DPFE EGR, VCT, VMV/EVMV, CVS, CPV, EVAPSV, FTP, CKP, CMP, ignition coils, injectors, no misfire DTCs, no system failures affecting fuel, no EVAP gross leak failure, UEGO/HO2S (front and rear) heaters OK, no "lack of switching" malfunction, no "lack of movement" malfunction (UEGO only), no UEGO/HO2S (front and rear) circuit malfunction, no rear HO2S out of range low malfunction, no UEGO FAOS monitor malfunction, no front HO2S/UEGO response rate malfunction
Monitoring Duration	continuous until monitor completed

ED_002078G_00001322-00113

Typical Rear HO2S functional check entry conditions:		
Entry condition	Minimum	Maximum
Stream 1 HO2S not in CSD recovery mode		
Flex Fuel Composition not changing		
Not in Phase 0 of Evaporative System Monitor		
No Purge System reset		
Purge intrusive test not running		
Not performing CSER spark retard		
Engine Coolant Temp	150 °F	240 °F
Intake Air Temp		140 °F
Time since entering closed loop fuel	10 seconds	
Inferred Catalyst Midbed Temperature		1600 °F
Heater-on Inferred Sensor(s) 2/3 HO2S Temperature Range	400 °F	1400 °F
Sensor(s) 2/3 HO2S heater-on time	90 seconds	
Short Term Fuel Trim Range	-9%	11%
Fuel Level (forced excursion only)	15%	
Throttle position	Part throttle	
Engine RPM (forced excursion only)	1000 rpm	2000 rpm
UEGO ASIC not in recalibration mode		
No air passing through during valve overlap (scavenging).		
Battery Voltage	11.0 Volts	18.0 Volts

Typical Rear HO2S functional check malfunction thresholds:
Does not exceed rich and lean threshold envelope: Rich < 0.42 volts Lean > 0.48 volts

J1979 Rear HO2S Functional Check Mode $06 Data			
Monitor ID	Test ID	Description	
$02	$01	HO2S12 sensor switch-point voltage	volts
$06	$01	HO2S22 sensor switch-point voltage	volts
$03	$01	HO2S13 sensor switch-point voltage	volts
$07	$01	HO2S23 sensor switch-point voltage	volts

Rear HO2S "Over Voltage Test" Operation:	
DTCs	P0138 HO2S12 Over voltage P0158 HO2S22 Over voltage
Monitor execution	continuous
Monitor Sequence	None
Sensors OK	rear HO2S heaters OK
Monitoring Duration	10 seconds to register a malfunction

Typical HO2S "Over Voltage Test" entry conditions:		
Entry condition	Minimum	Maximum
Inferred Stream 2/3 HO2S Temperature	400 ^{o}F	
Sensor(s) 2/3 HO2S heater-on time	90 seconds	
Voltage at sensor 2 HO2S connector	11.0 Volts	
Battery Voltage	11.0 Volts	18.0 Volts

Typical HO2S "Over Voltage Test" malfunction thresholds:
> 1.1 volts for 10 seconds for over voltage test

Rear HO2S "Out of Range Low Test" Operation:	
DTCs	P2A01 HO2S12 Circuit Range/Performance (Bank 1 Sensor 2) P2A04 HO2S22 Circuit Range/Performance (Bank 2 Sensor 2)
Monitor execution	continuous
Monitor Sequence	None
Sensors OK	rear HO2S heaters OK, no rear HO2S shorted to ground malfunction
Monitoring Duration	10 seconds to register a malfunction

Typical HO2S "Out of Range Low Test" entry conditions:		
Entry condition	Minimum	Maximum
Inferred Stream 2 HO2S Temperature	400 °F	
Sensor 2 HO2S heater-on time	90 seconds	
Voltage at sensor 2 HO2S connector	11.0 Volts	
Battery Voltage	11.0 Volts	18.0 Volts

Typical HO2S "Out of Range Low Test" malfunction thresholds:
< -0.2 volts for 10 seconds for out of range low test

Rear HO2S "Circuit Open/Shorted to Ground Test" Operation:	
DTCs	P0137 HO2S12 Circuit Low Voltage (Bank 1 Sensor 2) P0157 HO2S22 Circuit Low Voltage (Bank 2 Sensor 2)
Monitor execution	continuous
Monitor Sequence	None
Sensors OK	rear HO2S heaters OK, no rear HO2S out of range low malfunction, no rear HO2S functional DTCs
Monitoring Duration	10 seconds to register a malfunction

Typical HO2S "Circuit Open/Shorted to Ground Test" entry conditions:		
Entry condition	Minimum	Maximum
Closed Loop		
Inferred Stream 2 HO2S Temperature	680 °F	1290 °F (short to ground)
Inferred Stream 2 HO2S Element Temperature (applicable only if Stream 2 HO2S Heater Impedance Monitor is enabled)	480 °F	
Time Stream 2 HO2S inferred element temperature within 10% of the predicted steady state temperature (applicable only if Stream 2 HO2S Heater Impedance Monitor is enabled)	1 second	
Sensor 2 HO2S heater-on time	60 seconds	
All injectors on (no Decel Fuel Shut Off)		
Not commanding lean lambda due to torque reduction		
Not requesting enrichment due to catalyst reactivation following decel fuel shut off		
Sensor 2 HO2S voltage (open circuit voltage fault band):		
Conti-Moto CBP-A2 PCM	-0.05 Volts	0.05 Volts
Bosch Tri-Core MED17.x PCM	0.40 Volts	0.50 Volts
Sensor 2 HO2S voltage (circuit shorted to ground voltage fault band):		
Conti-Moto CBP-A2 PCM	-1.00 Volts	0.05 Volts
Bosch Tri-Core MED17.x PCM	-1.00 Volts	0.05 Volts
Voltage at sensor 2 HO2S connector	11.0 Volts	
Battery Voltage	11.0 Volts	18.0 Volts

Typical HO2S "Circuit Open/Shorted to Ground Test" malfunction thresholds:
HO2S Circuit Open: > 1 M ohms, fault counter > 14 (200 msec test every 500 msec check)
HO2S Circuit Shorted to ground: < 10 ohms, fault counter > 17 (100 msec test every 500 msec check)

Rear HO2S Decel Fuel Shut Off Response Test (2009 MY+)

The catalyst monitor tracks and uses the length of the rear HO2S signal. The rear HO2S is also known as the Catalyst Monitor Sensor (CMS). As the catalyst ages, air/fuel fluctuations begin to break through the catalyst and the length of this signal increases. Eventually the length of the CMS signal becomes long enough to identify a failure for the catalyst monitor.

When an HO2S sensor degrades, it's response to air/fuel fluctuations slows down. The effect of a slow rear HO2S sensor on the catalyst monitor is to reduce the length of the signal. A slow CMS sensor, therefore, may cause the catalyst monitor to incorrectly pass a failed catalyst. The purpose of the Rear DFSO Response diagnostic is to ensure the catalyst monitor has a valid CMS sensor with which to perform the catalyst monitor diagnostic. The monitor is set to trigger at the level of degradation that will cause the catalyst monitor to falsely pass a malfunction threshold catalyst.

The OBD-II regulations require this monitor to utilize Decel Fuel Shut Off (DFSO). Ford plans to aggressively use DFSO starting in the 2009 MY on many applications to improve fuel economy. The DFSO rear O2 response test will be phased in coincident with this feature.

The main part of the test is the measured rich to lean response rate. It is determined by a "slew" rate calculation which determines the rich to lean slope of the sensor during a Decel Fuel Shut Off (DFSO) event which occurs during closed pedal at vehicle speeds higher than 28 mph. The calculation for the slew rate (mV/sec) is illustrated below.

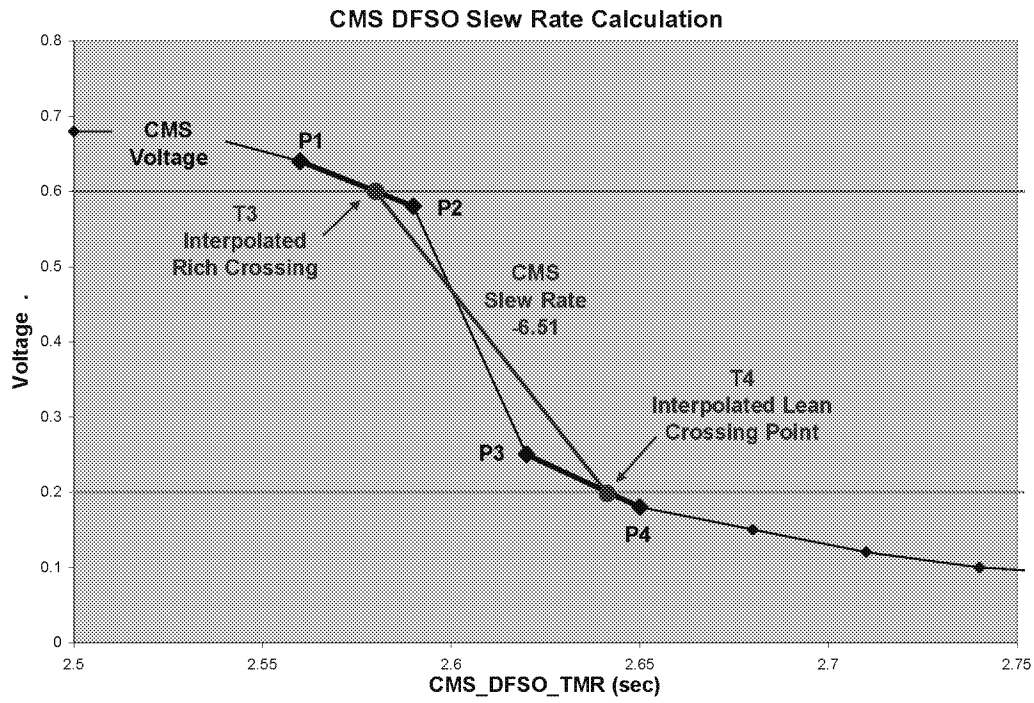

Linear interpolation is performed to calculate the Slew Rate.

1. Interpolate between points P1 and P2 to determine the time at which the rich limit threshold of 0.6 volts was crossed.

2. Interpolate between points P3 and P4 to determine the time at which the lean limit threshold of 0.2 volts was crossed.

3. Use the Interpolated times and the thresholds to calculate the slope or "slew rate" of the CMS sensor from 0.6 to 0.2 volts.

ED_002078G_00001322-00118

Diagnostic Data Acquisition Event Plot is a schematic of what happens when the pedal is closed and the engine enters DFSO.

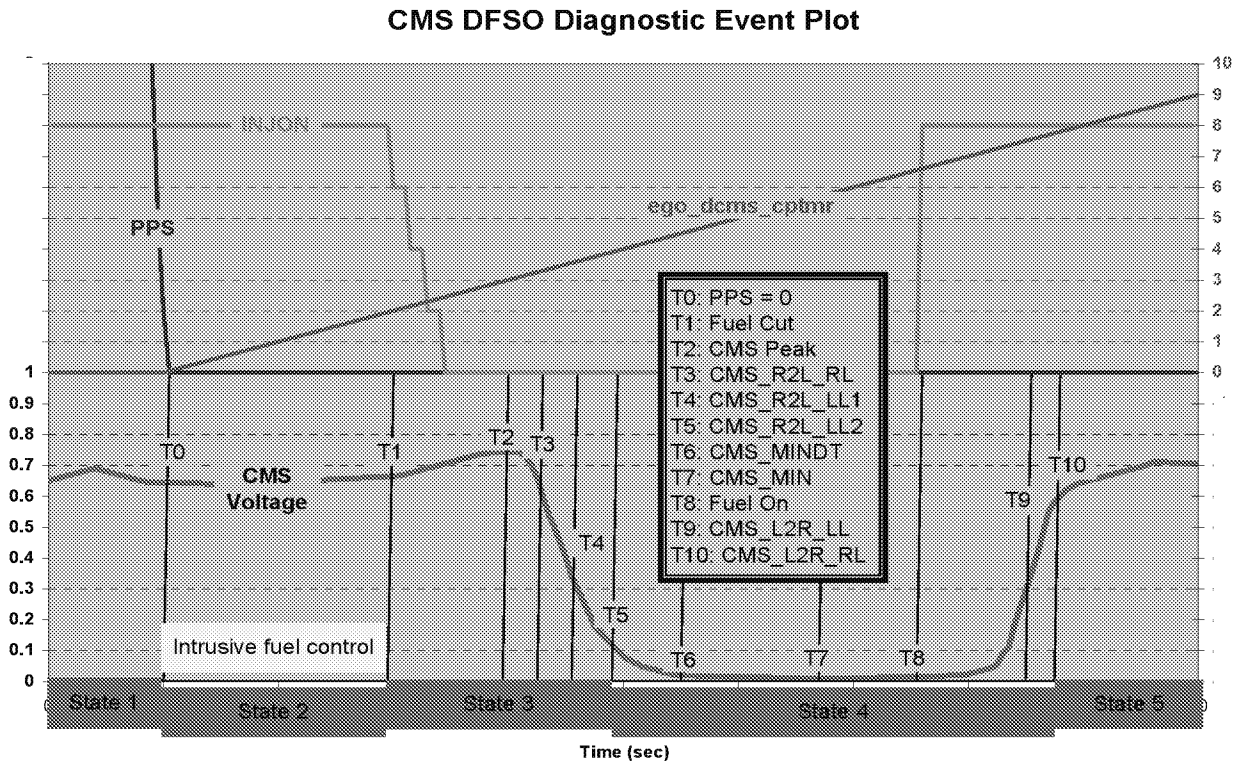

The top half of the graph shows the following signals:

Closed pedal timer (ego_dcms_cptmr).

PPS (Pedal Position Sensor)

INJON (# of fuel injectors turned on)

The bottom half of the graph shows a CMS signal with black lines and a "Tx" number representing all of the points of interest where the monitor captures data.

ED_002078G_00001322-00119

The monitor measures the CMS Rich to Lean slew rate during a DFSO event. The CMS voltage must be rich prior to the injector cut for a valid measurement event. Each fuel cut can only yield 1 valid event. The monitor will complete after 3 valid events. Additional valid event results will be stored and applied over the next drive cycle if necessary for monitor completion.

The slope or slew rate of the CMS sensor going from rich to lean is a negative number with the units of mVolts/sec. The measured slew rate changes as an O2 sensor degrades, but it will also change as a function of catalyst oxygen storage/age; therefore, the slew rate is normalized using an offset based on catalyst oxygen storage/age. The catalyst oxygen storage/age is calculated by integrating the level of oxygen mass in the exhaust stream from the time the injectors turn off to the time where the slew rate calculation begins. The fault line (red line in the chart below) is calibrated to 80% of the fault distribution for various levels of oxygen storage/catalyst age. As shown below, the integrated oxygen mass becomes smaller with catalyst age.

The final output of the monitor = the measured slew rate – normalized fault line, therefore, any positive number will represent a fault. For the step change logic the fault threshold will represent 50% of the failed distribution (~ 0.3).

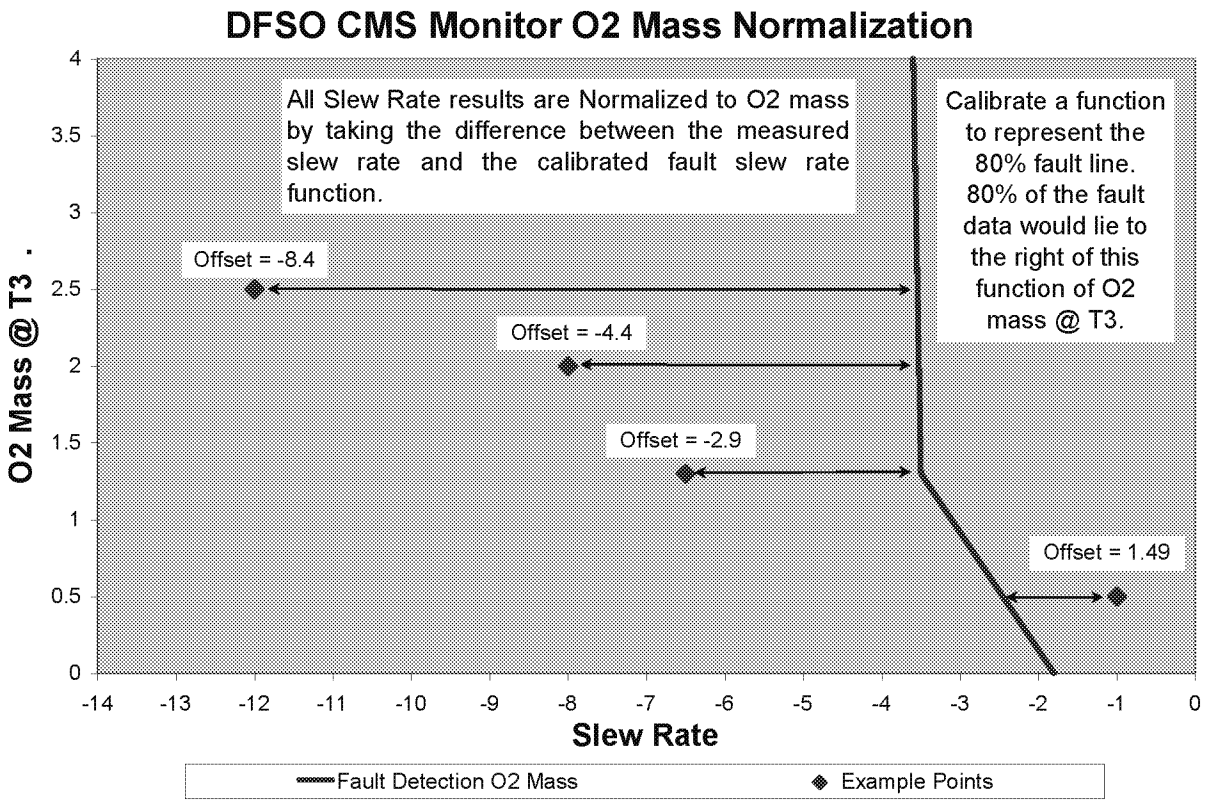

The delayed response part of the test indicates that the sensor is stuck in range. The code sets if the sensor can't get above a calibrated rich or lean voltage prior to a calibrated time out period. This time out must happen three times in a row to set the fault. If it happens once or twice and then the response monitor completes, the counter will be reset and the sensor will have to fail 3 times in a row to again set the DTC.

Due to the fact that intrusively driving the CMS sensor rich will cause drivability and emission concerns, there are other several condition counters that have to fail prior to intrusively forcing the sensor to go rich. The sequence of events to get to the rich failure is shown below:

- Initially, in order to avoid excess emissions, the monitor will only run if the CMS voltage is rich (> 0.6 volts) or CMS sensor is transitioning from lean to rich (large positive slope . 0.2).
    - Successive failures are counted up; when the count exceeds 5 to 10 failures the monitor will now intrusively force rich fuel to run the test.
- In order to avoid a drivability issues as a result of a lean shifted bank, the first phase of intrusive control has a short time out (1 to 2 seconds).
    - Successive failures are counted up; when the count exceeds 3 failures the monitor will now intrusively force rich fuel to failure or a rich sensor.
- All controllable measures have failed to force the sensor to switch, so the strategy will drive rich until the sensor switches or the failure time out is exceeded (5 to 10 seconds).
    - Successive failures are counted up; when the count exceeds 3 failures the monitor will now set a fault (P013E for bank 1 or P014A for bank 2).

If the sensor is stuck rich (can't get lean) the fault procedure is:

- While the injectors remain off, the sensor must get lean (<0.1 volts) prior to the failure time which must be set to account for a green catalyst (5 to 10 seconds).
    - Successive failures are counted up; when the count exceeds 3 failures the monitor will now set a fault (P013E for bank 1 or P014A for bank 2).

EWMA Fault Filtering

The EWMA logic incorporates several important CARB requirements. These are:

- Fast Initial Response (FIR): The first 4 tests after a battery disconnect or code clear will process unfiltered data to quickly indicate a fault. The FIR will use a 2-trip MIL. This will help the service technician determine that a fault has been fixed.

- Step-change Logic (SCL): The logic will detect an abrupt change from a no-fault condition to a fault condition. The SCL will be active after the 4th DCMS monitor cycle and will also use a 2-trip MIL. This will illuminate the MIL when a fault is instantaneously induced.

- Normal EWMA (NORM): This is the normal mode of operation and uses an Exponentially Weighted Moving Average (EWMA) to filter the DCMS test data. It is employed after the 4th DCMS test and will illuminate a MIL during the drive cycle where the EWMA value exceeds the fault threshold. (1 trip MIL).

ED_002078G_00001322-00121

Rear O2 **DFSO Response Monitor Operation:**	
DTCs	P013A – O2 Sensor Slow Response – Rich to Lean (Bank 1 Sensor 2) P013C – O2 Sensor Slow Response – Rich to Lean (Bank 2 Sensor 2) P013E – O2 Sensor Delayed Response – Rich to Lean (Bank 1 Sensor 2) (sensor stuck in range) P014A – O2 Sensor Delayed Response – Rich to Lean (Bank 2 Sensor 2) (sensor stuck in range)
Monitor execution	Once per driving cycle, after 3 DFSO events.
Monitor Sequence	> 30 seconds time in lack of movement test (UEGO only), > 30 seconds time in lack of switch test, front HO2S/UEGO response test complete, HO2S 2 and 3 functional tests complete, HO2S/UEGO heater voltage and current checks complete, FAOS monitor system bias maturity met (UEGO applications only)
Sensors OK	ECT, IAT, MAF, VSS, TP, ETC, FRP, EGR, VCT, VMV/EVMV, CVS, FTP, CKP, CMP, ignition coils, injectors, no misfire DTCs, no system failures affecting fuel, no EVAP gross leak failure, UEGO heaters OK, rear HO2S heaters OK, no "lack of switching" malfunction, no "lack of movement" malfunction, no UEGO circuit malfunction, no rear stream 2 HO2S circuit malfunction, no rear stream 2 HO2S functional DTCs, Not performing CSER spark retard. Flex fuel composition not changing. No intrusive EGO monitors running.
Monitoring Duration	3 DFSO events, 450 seconds on the FTP.

Typical DFSO Response Monitor entry conditions:		
Entry condition	Minimum	Maximum
Air Mass	0.5	6
Vehicle Speed		90
Inlet Air Temp		140
Engine Coolant Temp	155 °F	240 °F
Catalyst Temperature (Inferred)	800 °F	1600 °F
Rear Ego Tip Temperature (Inferred)	800 °F	
Fuel Level	15%	
Fuel In Control	-3%	3%
Adaptive Fuel Within Limits	-3%	3%
Battery Voltage	11.0 Volts	18.0 Volts
Rich Voltage on downstream CMS sensor(s)	0.6 Volts	
Rich Voltage on upstream HEGO / UEGO sensor(s)	0.45 Volts (HEGO)	1 (UEGO)

Typical DFSO response rate malfunction thresholds:
Rich to lean slew rate thresholds: Normal Threshold = > 0.0 mV/sec Fast Initial Response Threshold = > 0.0 mV/sec Step Change Threshold = > 0.3 mV/sec Note that the thresholds use a normalized offset and the threshold is set at "zero".

Typical DFSO delayed response malfunction thresholds:
Successive failures are counted up (5 to 10 faults). Monitor will now intrusively force rich fuel to run the test. Intrusive controls will time out based on drivability (1 to 2 sec). Successive drivability failures are counted up (3 faults). Intrusive controls will now time out at a slower time (5 to 10 sec) and count a fault. After 3 faults are counted, a DTC is set.

J1979 DFSO response rate Mode $06 Data

Monitor ID	Test ID	Description	
$02	$85	HO2S12 Fuel Shut off Rich to Lean Response Rate (P013A)	mV/sec
$02	$86	HO2S12 Fuel Shut off Rich to Lean Response Time (P013E)	msec
$06	$85	HO2S22 Fuel Shut off Rich to Lean Response Rate (P013C)	mV/sec
$06	$86	HO2S22 Fuel Shut off Rich to Lean Response Time (P014A)	msec

Rear HO2S Heaters

The HO2S heaters are monitored for proper voltage and current. A HO2S heater voltage fault (open, shorted to ground, or shorted to battery) is determined by turning the heater on and off and looking for corresponding voltage change in the heater output driver circuit in the PCM.

A separate current-monitoring circuit monitors heater current once per driving cycle. The heater current is actually sampled once to three times. Multiple samples are taken for protection against noise on the heater current circuit. If the majority of the current samples fall below or above a calibratable threshold, the heater is assumed to be degraded or malfunctioning.

Beginning 2012MY, some PCMs do not have a separate heater current-monitoring circuit (without shunt resistors that can directly measure the current through the HEGO heaters). In this case, the sensor heater performance is monitored by the "HO2S Heater Impedance Monitor". The HO2S heater impedance monitor measures the HO2S internal impedance, validates the measurement, and then compares the validated internal impedance to an internal impedance threshold. If the validated internal impedance exceeds the threshold, then the monitor fault counter increments once. If the fault counter exceeds the total number of valid internal impedance measurements required, a HO2S heater control circuit range/performance malfunction (P00D2/P00D4) will be set.

Any corrosion in the harness wiring, connector, or increase in the sensor heater element resistance will result in an overall increase in the heater circuit resistance, causing the HO2S impedance to increase. The impedance is dependent on the HO2S element temperature and the voltage at the connector. As the HO2S element temperature increases, the impedance decreases. Furthermore, as the voltage at the connector increases, the sensor impedance decreases. Hence, the impedance threshold is a function of the inferred HO2S element temperature and the voltage at the connector.

The HO2S heater impedance monitor runs once per trip; however, it can be forced to run intrusively. When the heater is inferred to have been adequately warm, but the HO2S sensor is suspected to be cold because the HO2S voltage falls inside the suspected open HO2S circuit voltage fault band or inside the suspected HO2S circuit shorted to ground voltage fault band, a HEGO sensor circuit or HEGO heater malfunction is suspected. To differentiate HO2S signal circuit failures from a degraded/malfunctioning heater or normal FAOS control, the HO2S heater impedance monitor is forced to run intrusively after the heater voltage test and the HO2S open/short to ground circuit diagnostics had ran and indicated no malfunction.

ED_002078G_00001322-00124

HO2S Heater Monitor Operation:	
DTCs Sensor 2	P0141 O2 Heater Circuit, Bank 1 P0161 O2 Heater Circuit, Bank 2 P0054 O2 Heater Resistance, Bank 1 P0060 O2 Heater Resistance, Bank 2 P00D2 HO2S Heater Control Circuit Range/Performance (Bank 1, Sensor 2) P00D4 HO2S Heater Control Circuit Range/Performance (Bank 2, Sensor 2)
DTCs Sensor 3	P0147 O2 Heater Circuit, Bank 1 P0167 O2 Heater Circuit, Bank 2 P0055 HO2S Heater Resistance, Bank 1 P0061 HO2S Heater Resistance, Bank 2
Monitor execution	once per driving cycle for heater current monitor and HO2S heater impedance monitor, continuous for voltage monitoring
Monitor Sequence	Heater current monitor: Stream 1 HO2S/UEGO response test complete (2010 MY and earlier), Stream 2 and 3 HO2S functional tests complete (2010 MY and earlier), HO2S/UEGO heater voltage check complete. HO2S heater impedance monitor: Stream 2 HO2S heater voltage check complete, Stream 2 HO2S circuit open/short to ground test time slice complete.
Sensors OK	Heater current monitor: no HO2S/UEGO heater voltage DTCs. HO2S heater impedance monitor: rear HO2S heaters OK, no rear HO2S out of range low malfunction, no rear HO2S functional DTCs, no rear HO2S circuit malfunction.
Monitoring Duration	< 10 seconds for heater voltage check, < 5 seconds for heater current check, < 11 seconds for HO2S heater impedance test.

ED_002078G_00001322-00125

Typical HO2S heater monitor entry conditions:		
Entry condition	Minimum	Maximum
Heater Voltage Test:		
Inferred HO2S 2/3 Temperature	400 °F	1400 °F
Battery Voltage	11.0	18.0 Volts
Heater Current Test:		
Inferred HO2S 2 Temperature	250 °F	1400 °F
Inferred HO2S 3 Temperature	250 °F	1400 °F
HO2S 1/2/3 heater-on time	30 seconds	
Engine RPM		5000 rpm
Battery Voltage	11.0	18.0 Volts
HO2S Heater Impedance Test:		
Inferred Stream 2 HO2S Temperature	680 °F	
Inferred Stream 2 HO2S Element Temperature	480 °F	1020 °F
Time Stream 2 HO2S inferred element temperature within 10% of the predicted steady state temperature	1 second	
Sensor 2 HO2S heater-on time	60 seconds	
All injectors on (no Decel Fuel Shut Off)		
Not commanding lean lambda due to torque reduction		
Not requesting enrichment due to catalyst reactivation following decel fuel shut off		
Sensor 2 HO2S voltage (open circuit voltage fault band- intrusive test only): Conti-Moto CBP-A2 PCM Bosch Tri-Core MED17.x PCM	 -0.05 Volts 0.40 Volts	 0.05 Volts 0.50 Volts
Sensor 2 HO2S voltage (circuit shorted to ground voltage fault band- intrusive test only): Conti-Moto CBP-A2 PCM Bosch Tri-Core MED17.x PCM	 -1.00 Volts -1.00 Volts	 0.05 Volts 0.05 Volts
Voltage at sensor 2 HO2S connector	11.0 Volts	
Battery Voltage	11.0 Volts	18.0 Volts

Typical HO2S heater check malfunction thresholds:

Heater Voltage Test:

Smart driver status indicated malfunction

Number monitor retries allowed for malfunction > = 30

Heater Current Test:

Heater current outside limits: < 0.220 Amps or > 3 Amps, (NTK)

< 0.400 Amps or > 3 Amps, (Bosch)

< 0.465 Amps or > 3 Amps, (NTK Fast Light Off)

< 0.230 Amps or > 3 Amps, (Bosch Fast Light Off)

HO2S Heater Impedance Test:

HO2S internal impedance > table below (ohms), fault counter > = 10

Voltage at HO2S (Volts)/ HO2S inferred element temp (°F)	11	13	14	15	18
480	71734	26000	14583	9268	2856
570	25864	10522	6496	3733	1644
671	8629	4057	2905	2083	1175
730	3253	1862	1399	1066	576
770	2906	1614	1223	941	530
905	838	575	470	383	273
1020	675	473	410	359	251

J1979 HO2S Heater Mode $06 Data

Monitor ID	Test ID	Description	Units
$42	$81	HO2S12 Heater Current (P0054)	Amps
$46	$81	HO2S22 Heater Current (P0060)	Amps
$43	$81	HO2S13 Heater Current (P0055)	Amps
$47	$81	HO2S23 Heater Current (P0061)	Amps
$42	$82	O2S12 Heater Impedance (P00D2)	kOhm
$46	$82	O2S22 Heater Impedance ({00D4}	kOhm

ESM DPFE EGR System Monitor

In the 2002.5 MY, Ford introduced a revised DPFE system. It functions in the same manner as the conventional DPFE system; however, the various system components have been combined into a single component called the EGR System Module (ESM). This arrangement increases system reliability while reducing cost. By relocating the EGR orifice from the exhaust to the intake, the downstream pressure signal measures Manifold Absolute Pressure (MAP). The ESM will provide the PCM with a differential DPFE signal, identical to the conventional DPFE system. The DPFE signal is obtained by electrically subtracting the MAP and P1 pressure signals and providing this signal to the DPFE input on the PCM. 2003 MY and later implementations of the ESM system has a separate input to the PCM for the MAP sensor signal.

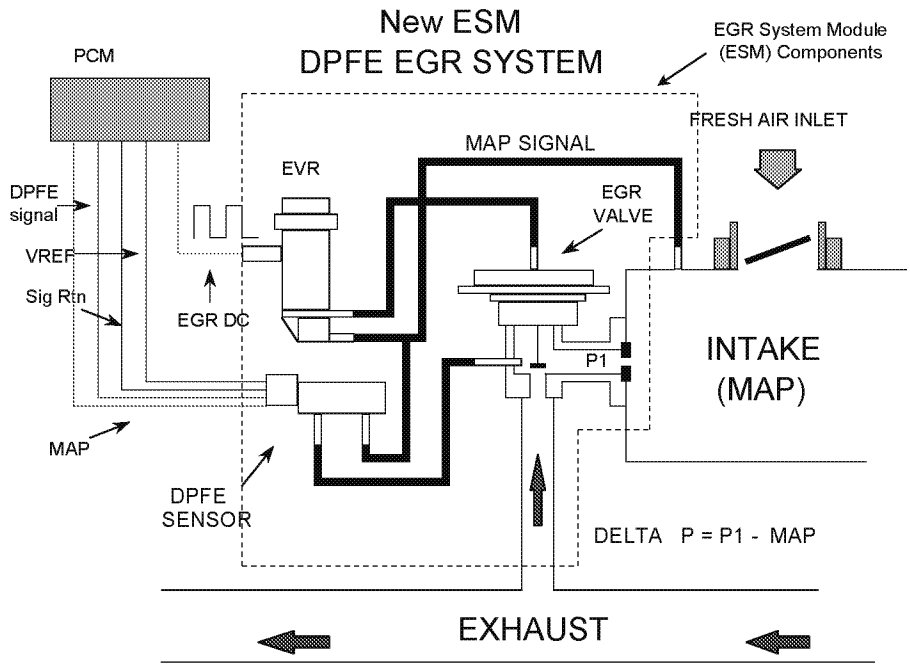

ESM DPFE EGR Monitor

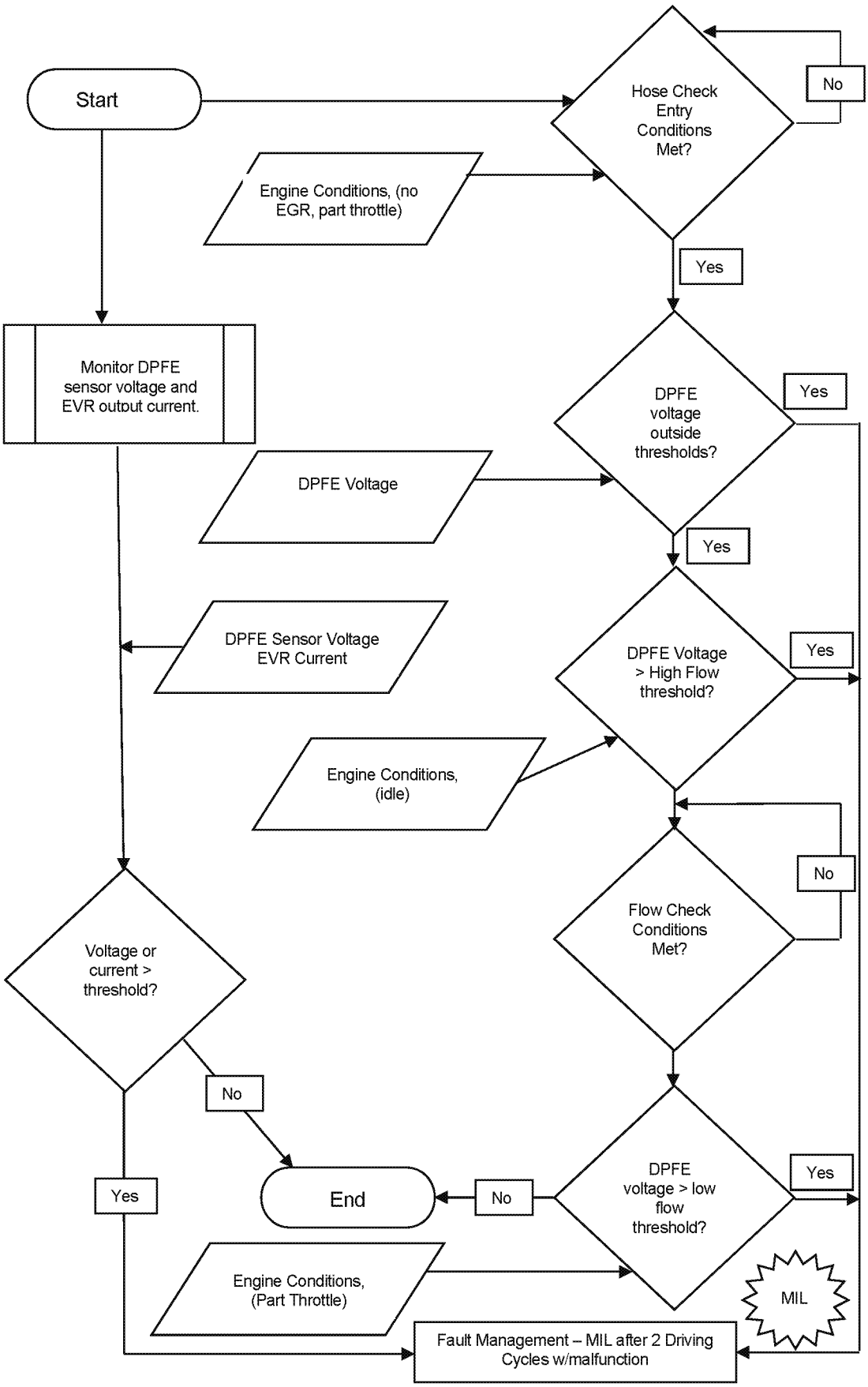

The ESM Delta Pressure Feedback EGR Monitor is a series of electrical tests and functional tests that monitor various aspects of EGR system operation.

First, the Delta Pressure Feedback EGR (DPFE) sensor input circuit is checked for out of range values (P1400 or P0405, P1401 or P0406). The Electronic Vacuum Regulator (EVR) output circuit is checked for opens and shorts (P1409 or P0403).

EGR Electrical Check Operation:	
DTCs	P1400 or P0405 - DPFE Circuit Low P1401 or P0406 - DPFE Circuit High P1409 or P0403 - EVR circuit open or shorted
Monitor execution	Continuous, during EGR monitor
Monitor Sequence	None
Sensors OK	
Monitoring Duration	4 seconds to register a malfunction

Typical EGR electrical check entry conditions:
EGR system enabled

Typical EGR electrical check malfunction thresholds:
DPFE sensor outside voltage: > 4.96 volts, < 0.0489 volts
EVR solenoid smart driver status indicates open/short

DPFE Sensor Transfer Function		
ESM DPFE volts = Vref [(0.683 * Delta Pressure) + 10] / 100		
Volts	A/D Counts in PCM	Delta Pressure, Inches H_2O
0.0489	10	-13.2
0.26	53	-7.0
0.5	102	0
0.74	151	7.0
1.52	310	30
2.55	521	60
3.57	730	90
4.96	1015	130.7

Note: EGR normally has large amounts of water vapor that are the result of the engine combustion process. During cold ambient temperatures, under some circumstances, water vapor can freeze in the DPFE sensor, hoses, as well as other components in the EGR system. In order to prevent MIL illumination for temporary freezing, the following logic is used:

If an EGR system malfunction is detected above 32 °F, the EGR system and the EGR monitor is disabled for the current driving cycle. A DTC is stored and the MIL is illuminated if the malfunction has been detected on two consecutive driving cycles.

If an EGR system malfunction is detected below 32 °F, only the EGR system is disabled for the current driving cycle. A DTC is not stored and the I/M readiness status for the EGR monitor will not change. The EGR monitor, however, will continue to operate. If the EGR monitor determined that the malfunction is no longer present (i.e., the ice melts), the EGR system will be enabled and normal system operation will be restored.

The ESM may provide the PCM with a separate, analog Manifold Absolute Pressure Sensor (MAP) signal. For the 2006 MY, the MAP signal has limited use within the PCM. It may be used to read BARO (key on, then updated at high load conditions while driving) or to modify requested EGR rates. Note that if the MAP pressure-sensing element fails in the ESM fails, the DPFE signal is also affected. Therefore, this MAP test is only checking the circuit from the MAP sensing element to the PCM.

The MAP sensor is checked for opens, shorts, or out-of-range values by monitoring the analog-to-digital (A/D) input voltage.

MAP Sensor Check Operation	
DTCs	P0107 (low voltage), P0108 (high voltage)
Monitor execution	continuous
Monitor Sequence	None
Sensors OK	not applicable
Monitoring Duration	5 seconds to register a malfunction

MAP electrical check entry conditions:
Battery voltage > 11.0 volts

Typical MAP sensor check malfunction thresholds:
Voltage < 0.024 volts or voltage > 4.96 volts

On ESM DPFE systems, after the vehicle is started, the differential pressure indicated by the ESM DPFE sensor at idle, at zero EGR flow is checked to ensure that both hoses to the ESM DPFE sensor are connected. At idle, the differential pressure should be zero (both hoses see intake manifold pressure). If the differential pressure indicated by the ESM DPFE sensor exceeds a maximum threshold or falls below a minimum threshold, an upstream or downstream hose malfunction is indicated (P1405, P1406).

ESM DPFE EGR Hose Check Operation:	
DTCs	P1405 - Upstream Hose Off or Plugged P1406 – Downstream Hose Off or Plugged
Monitor execution	once per driving cycle
Monitor Sequence	after electrical checks completed
Sensors OK	MAF
Monitoring Duration	10 seconds to register a malfunction

Typical ESM DPFE EGR hose check entry conditions:		
Entry Conditions	Minimum	Maximum
EVR Duty Cycle (EGR commanded off)	0%	0%
Closed throttle (warm engine idle)		
Engine Coolant Temperature	150 °F	220 °F

Typical ESM EGR hose check malfunction thresholds:
DPFE sensor voltage: < -0.122 volts (-11.06 in H_2O), > 4.69 volts (122.82 in H_2O)

J1979 Mode $06 Data			
Monitor ID	Test ID	Description for ESM DPFE	
$32	$82	Delta pressure for upstream hose test and threshold (P1405)	kPa
$32	$83	Delta pressure for downstream hose test and threshold (P1406)	kPa

Note: OBD monitor ID $32, Test ID $82 (upstream hose test) may erroneously show a failing test result when no P1405 DTC is present. This is cause by in incorrect max limit in the software. The incorrect max limit will show a negative value (approx -32 kPa). The correct max limit will show a positive value (approx. +32 kPa). Early production vehicles may exhibit this issue until the software is corrected by a production running change or service fix.

Next, the differential pressure indicated by the DPFE sensor is also checked at idle with zero requested EGR flow to perform the high flow check. If the differential pressure exceeds a calibratable limit, it indicates a stuck open EGR valve or debris temporarily lodged under the EGR valve seat (P0402).

EGR Stuck open Check Operation:	
DTCs	P0402
Monitor execution	once per driving cycle
Monitor Sequence	done after hose tests completed
Sensors OK	CPS, ECT, IAT, MAF, TP, MAP (P0106/7/8)
Monitoring Duration	10 seconds to register a malfunction

Typical EGR stuck open check entry conditions:		
Entry Condition	Minimum	Maximum
EVR Duty Cycle (EGR commanded off)	0%	0%
Engine RPM (after EGR enabled)	at idle	Idle

Typical EGR stuck open check malfunction thresholds:
DPFE sensor voltage at idle versus engine-off signal: > 0.6 volts

J1979 Mode $06 Data			
Monitor ID	Test ID	Description for ESM DPFE	Units
$32	$84	Delta pressure for stuck open test and threshold (P0402)	kPa

ED_002078G_00001322-00133

After the vehicle has warmed up and normal EGR rates are being commanded by the PCM, the low flow check is performed. Since the EGR system is a closed loop system, the EGR system will deliver the requested EGR flow as long as it has the capacity to do so. If the EVR duty cycle is very high (greater than 80% duty cycle), the differential pressure indicated by the DPFE sensor is evaluated to determine the amount of EGR system restriction. If the differential pressure is below a calibratable threshold, a low flow malfunction is indicated (P0401).

EGR Flow Check Operation:	
DTCs	P0401 – Insufficient Flow
Monitor execution	once per driving cycle
Monitor Sequence	done after P0402 completed
Sensors OK	CPS, ECT, IAT, MAF, TP, MAP (P0106/7/8)
Monitoring Duration	70 seconds to register a malfunction

Typical EGR flow check entry conditions:		
Entry Condition	Minimum	Maximum
EVR Duty Cycle	80%	100%
Engine RPM		2500 rpm
Mass Air Flow Rate of Change		6% program loop
Inferred manifold vacuum	6 in Hg	10 in Hg

Typical EGR flow check malfunction thresholds:
DPFE sensor voltage: < 6 in H_2O

J1979 Mode $06 Data			
Monitor ID	Test ID	Description for ESM DPFE	Units
$32	$85	Delta pressure for flow test and threshold (P0401)	kPa

I/M Readiness Indication

If the inferred ambient temperature is less than 32 °F, or greater than 140 °F, or the altitude is greater than 8,000 feet (BARO < 22.5 "Hg), the EGR monitor cannot be run reliably. In these conditions, a timer starts to accumulate the time in these conditions. If the vehicle leaves these extreme conditions, the timer starts decrementing, and, if conditions permit, will attempt to complete the EGR flow monitor. If the timer reaches 500 seconds, the EGR monitor is disabled for the remainder of the current driving cycle and the EGR Monitor I/M Readiness bit will be set to a “ready” condition after one such driving cycle. Starting in the 2002 MY, vehicles will require two such driving cycles for the EGR Monitor I/M Readiness bit to be set to a "ready" condition.

ED_002078G_00001322-00134

Stepper Motor EGR System Monitor

The Electric Stepper Motor EGR System uses an electric stepper motor to directly actuate an EGR valve rather than using engine vacuum and a diaphragm on the EGR valve. The EGR valve is controlled by commanding from 0 to 52 discreet increments or “steps” to get the EGR valve from a fully closed to fully open position. The position of the EGR valve determines the EGR flow. Control of the EGR valve is achieved by a non-feedback, open loop control strategy. Because there is no EGR valve position feedback, monitoring for proper EGR flow requires the addition of a MAP sensor.

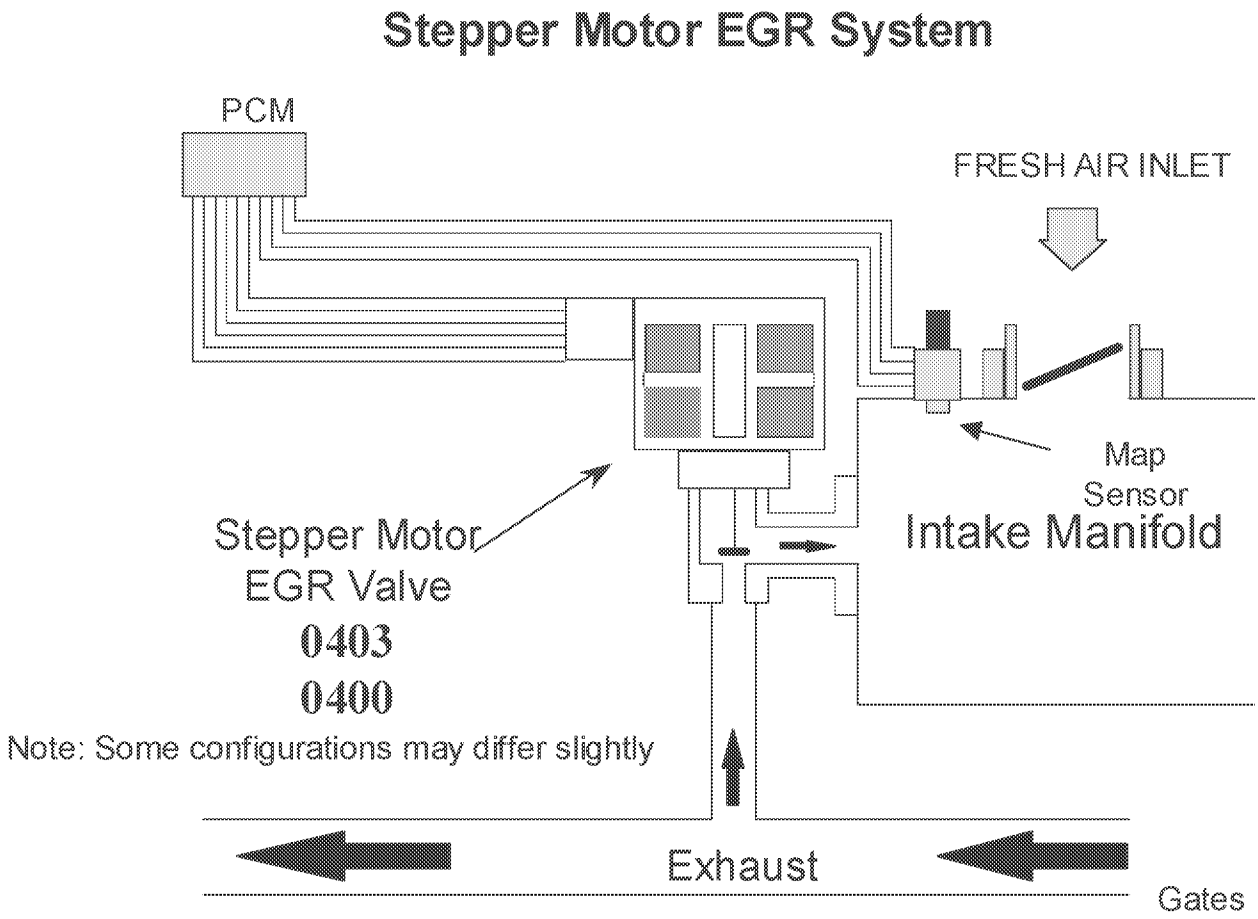

ED_002078G_00001322-00135

The Stepper Motor EGR Monitor consists of an electrical and functional test that checks the stepper motor and the EGR system for proper flow.

The stepper motor electrical test is a continuous check of the four electric stepper motor coils and circuits to the PCM. A malfunction is indicated if an open circuit, short to power, or short to ground has occurred in one or more of the stepper motor coils for a calibrated period of time. If a malfunction has been detected, the EGR system will be disabled, and additional monitoring will be suspended for the remainder of the driving cycle, until the next engine start-up.

EGR Stepper Monitor Electrical Check Operation:	
DTCs	P0403
Monitor execution	continuous
Monitor Sequence	none
Sensors OK	
Monitoring Duration	4 seconds to register a malfunction

Stepper motor electrical check entry conditions:
Battery voltage > 11.0 volts

Typical EGR electrical check malfunction thresholds:
“Smart” Coil Output Driver status indicates open or short to ground, or short to power

EGR flow is monitored using an analog Manifold Absolute Pressure Sensor (MAP). If a malfunction has been detected in the MAP sensor, the EGR monitor will not perform the EGR flow test.

The MAP sensor is checked for opens, shorts, or out-of-range values by monitoring the analog-to-digital (A/D) input voltage.

MAP Sensor Check Operation	
DTCs	P0107 (low voltage), P0108 (high voltage)
Monitor execution	continuous
Monitor Sequence	none
Sensors OK	not applicable
Monitoring Duration	5 seconds to register a malfunction

MAP electrical check entry conditions:
Battery voltage > 11.0 volts

Typical MAP sensor check malfunction thresholds:
Voltage < 0.024 volts or voltage > 4.96 volts

The MAP sensor is also checked for rational values. The value of inferred MAP is checked against the actual value of MAP at idle and non-idle engine operating conditions.

MAP Sensor Rationality Check Operation	
DTCs	P0106
Monitor execution	continuous
Monitor Sequence	None
Sensors OK	not applicable
Monitoring Duration	10 seconds to register a malfunction

Typical MAP Rationality check entry conditions:		
Entry Conditions	Minimum	Maximum
Change in load		5%
Engine rpm	500 rpm	1800 rpm

Typical MAP Rationality check malfunction thresholds:
Difference between inferred MAP and actual MAP > 10 in Hg

The MAP sensor is also checked for intermittent MAP faults.

MAP Sensor Intermittent Check Operation	
DTCs	P0109 (non-MIL)
Monitor execution	Continuous
Monitor Sequence	None
Sensors OK	not applicable
Monitoring Duration	2 seconds to register a malfunction

Typical MAP Intermittent check malfunction thresholds:
Voltage < 0.024 volts or voltage > 4.96 volts

When EGR is delivered into the intake manifold, intake manifold vacuum is reduced and thus manifold absolute pressure (MAP) is increased. A MAP sensor and inferred MAP are used by this monitor to determine how much EGR is flowing. A MAP sensor located in the intake manifold measures the pressure when EGR is being delivered and when EGR is not being delivered. The pressure difference between EGR-on and EGR-off is calculated and averaged. If the vehicle also has a MAF sensor fitted, then the monitor also calculates and averages an inferred MAP value in the above calculation and resulting average. After a calibrated number of EGR-on and EGR-off cycles are taken, the measured and inferred MAP values are added together and compared to a minimum threshold to determine if a flow failure (P0400) in the EGR system has occurred.

EGR Flow Check Operation:	
DTCs	P0400
Monitor execution	once per driving cycle
Monitor Sequence	None
Sensors OK	CPS, ECT, IAT, MAF, MAP (P0106/7/8), TP, BARO not available yet
Monitoring Duration	200 seconds (600 data samples)

Typical EGR flow check entry conditions:		
Entry Condition	Minimum	Maximum
Engine RPM	1400 rpm	2600 rpm
Inferred Ambient Air Temperature	32 °F	140 °F
Engine Coolant Temperature	80 °F	250 °F
Engine RPM Steady (change/0.050 sec)		100 rpm
MAP Steady (change/0.050 sec)		0.5 in Hg
Engine Load Steady (change/0.050 sec)		1.5 %
BARO	22.5 " Hg	
Intake Manifold Vacuum	9.0 "Hg	16.0 "Hg
Vehicle Speed	35 MPH	70 MPH
Engine Throttle Angle steady(absolute change)	0.0 degrees	4.0 degrees

Typical EGR flow check malfunction thresholds:
< 1.0 MAP differential

J1979 Mode $06 Data			
Monitor ID	Test ID	Description	Units
$33	$82	Normalized MAP differential (range 0 – 2) (P0400)	unitless

ED_002078G_00001322-00138

I/M Readiness Indication

If the inferred ambient temperature is less than 20 °F, greater than 130 °F, or the altitude is greater than 8,000 feet (BARO < 22.5 "Hg), the EGR flow test cannot be reliably done. In these conditions, the EGR flow test is suspended and a timer starts to accumulate the time in these conditions. If the vehicle leaves these extreme conditions, the timer starts decrementing, and, if conditions permit, will attempt to complete the EGR flow monitor. If the timer reaches 800 seconds, the EGR flow test is disabled for the remainder of the current driving cycle and the EGR Monitor I/M Readiness bit will be set to a “ready” condition after one such driving cycle. Two such consecutive driving cycles are required for the EGR Monitor I/M Readiness bit to be set to a "ready" condition.

ED_002078G_00001322-00139

PCV System Monitor

The PCV valve is installed into the rocker cover using a quarter-turn cam-lock design to prevent accidental disconnection. The PVC valve is connected to the intake manifold hose using a quick connect. Because the PCV valve has locking tabs and cannot be removed from the rocker cover without the use of special removal tools, the quick connect will be disconnected first in the event vehicle service is required. Molded plastic lines are typically used from the PCV valve to the intake manifold. The diameter of the lines and the intake manifold have been increased to 0.625" so that inadvertent disconnection of the lines after a vehicle is serviced will cause either an immediate engine stall or will not allow the engine to be restarted. In the event that the vehicle does not stall if the line between the intake manifold and PCV valve is inadvertently disconnected, the vehicle will have a large vacuum leak that will cause a Mass Air Flow equipped vehicle to run lean at idle. This will illuminate the MIL after two consecutive driving cycles and will store one or more of the following codes: Lack of O2 sensor switches, Bank 1 (P2195), Lack of O2 sensor switches Bank 2 (P2197), Fuel System Lean, Bank 1 (P0171),, Fuel System Lean, Bank 2 (P0174)

The PCV valve may incorporate a heater on some applications. A heated PCV valve is shown below. The PCV valve is designed to last for the life of the vehicle and should not require servicing or replacement.

Rocker cover with nub for quarter-turn valve

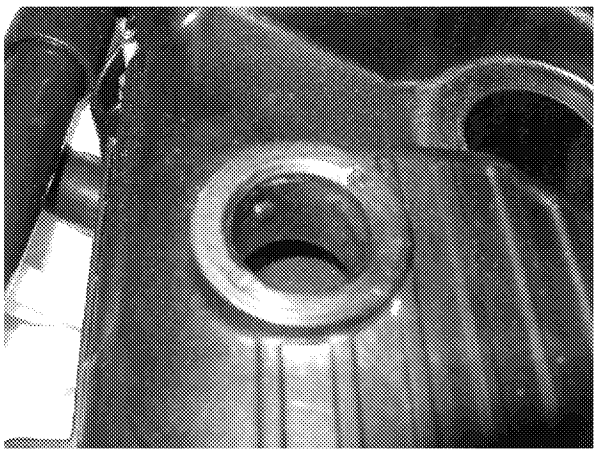

PCV hose with quick connect

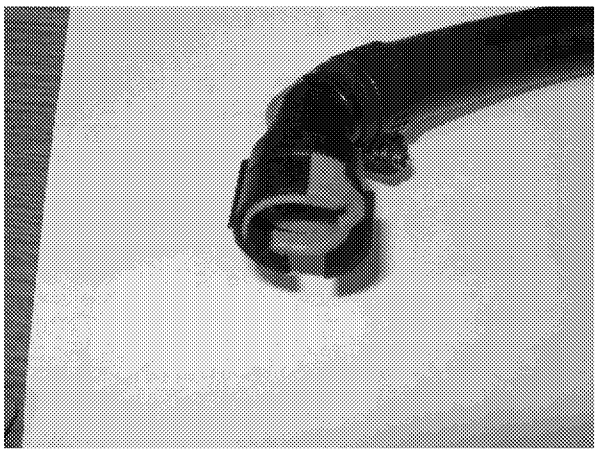

Heater quarter-turn PCV valve with heater

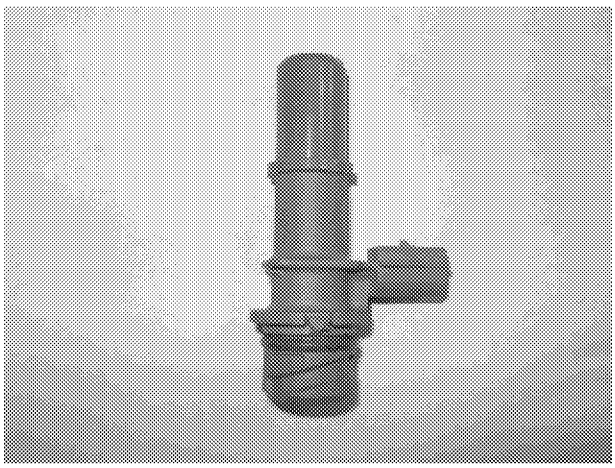

Assembled PCV system

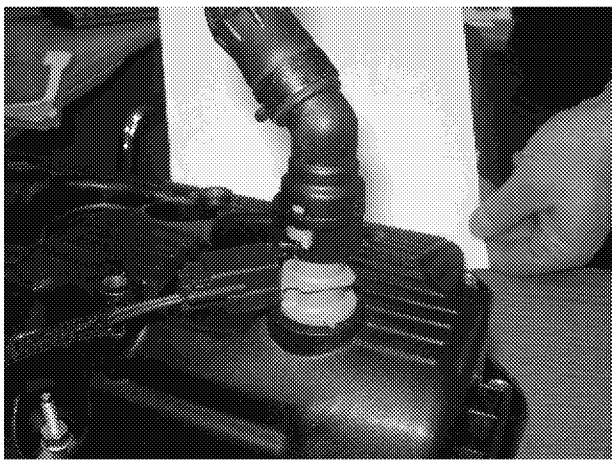

PCV System Monitor (GTDI With Speed Density)

The PCV Inlet Tube has a no-tool quick disconnect on either end. Disconnection causes a 10.92 mm diameter leak into the intake manifold from atmosphere. The idle speed control is largely under control if an intake manifold leak exists. A persistent intake manifold leak would simply increase fuel consumption at idle and raise the engine idle speed slightly. A disconnection in the PCV inlet tube is made detectable by insuring that if it is disconnected a large (detectable) leak results. The PCV valve is semi-permanently affixed to the external oil separator. Both right and left valve covers contain internal oil separators. Overcoming the toque provided by the locking tabs allows removal via a ¼ turn. It is replaceable, but needs to be "torqued out" of the assembly. Mechanically, the hose is easy to disconnect (detectable disconnection) and the PCV valve is difficult to disconnect (undetectable disconnection).

The detection method compares engine air flow rate as computed from the speed density air charge calculation with the throttle air flow rate. Should the air entering the engine exceed the air through the throttle by a threshold amount, a leak is detected.

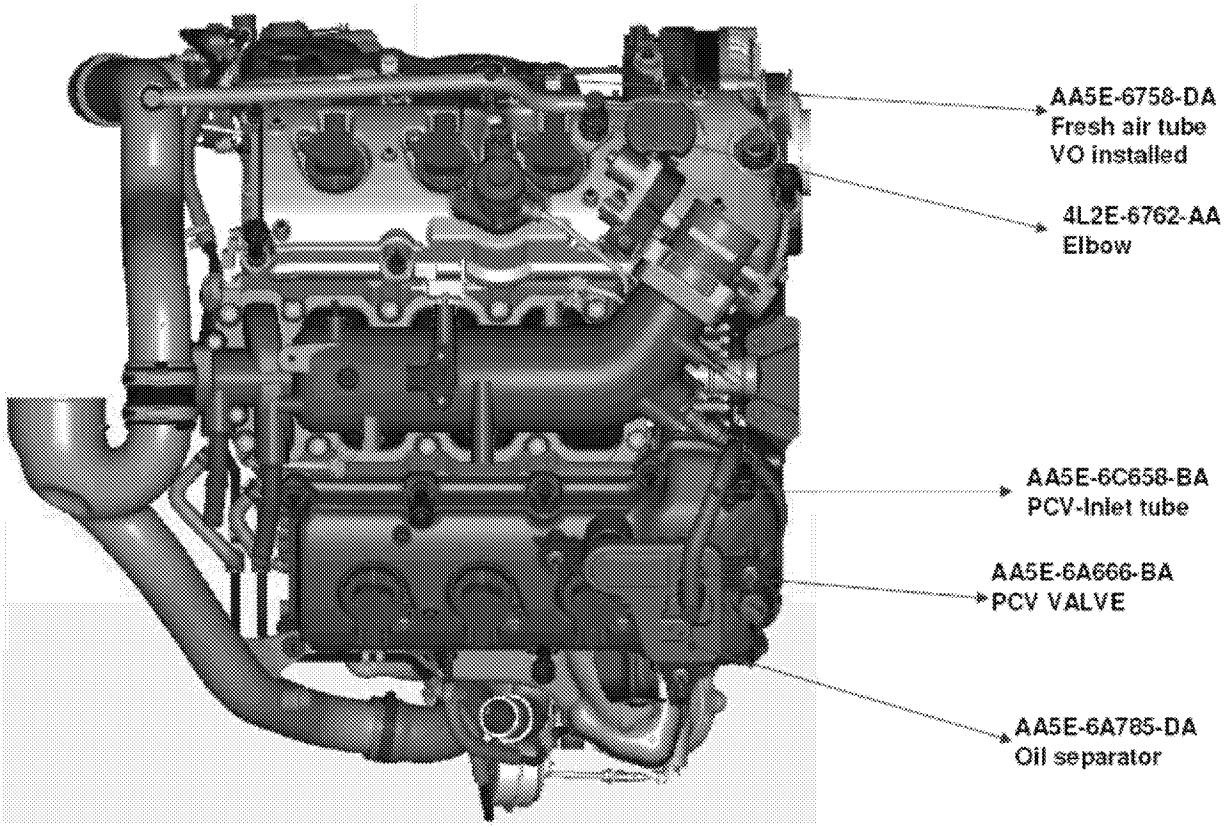

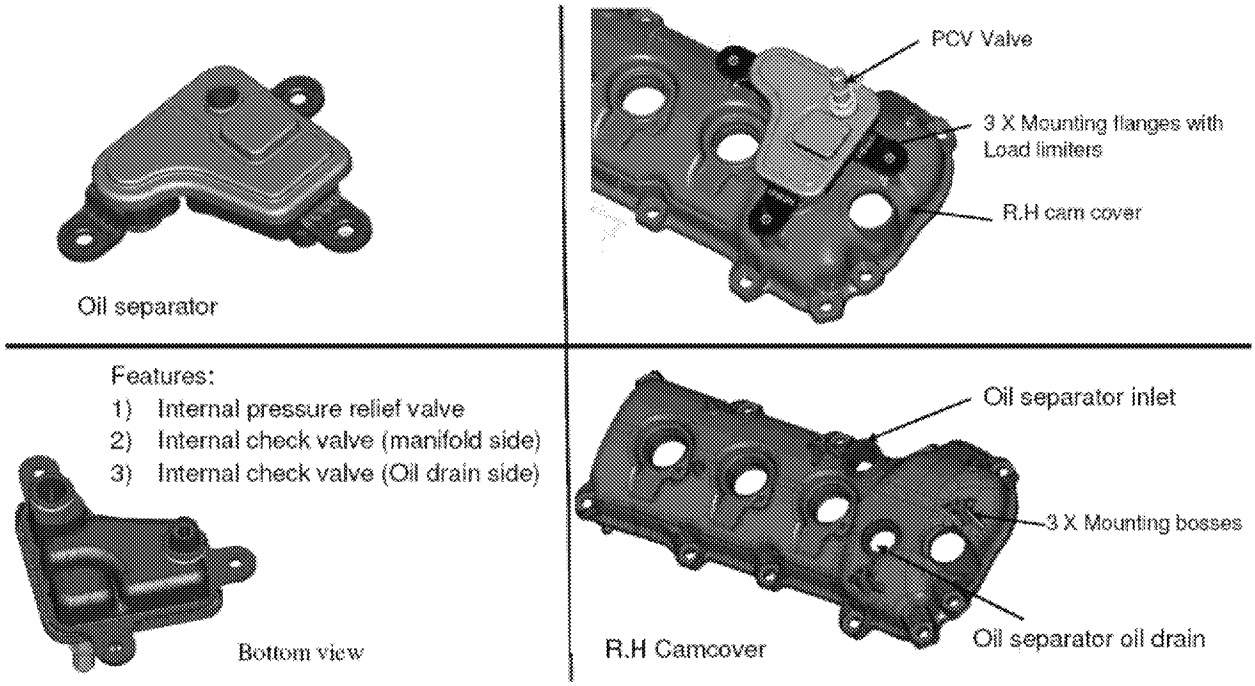

PCV M onitor Operation	
DTCs	P2282 - Air Leak Between Throttle Body and Intake Valve
Monitor execution	Continuous
Monitor Sequence	None
Monitoring Duration	N/A
Sensors OK	No fault is present in any of the sensors or systems affecting the PCV monitor. BARO sensor, MAP sensor, throttle charge temperature sensor, throttle inlet pressure sensor, manifold charge temperature sensor, no VCT malfunction

Typical P2282 check entry conditions:		
Entry Condition	Minimum	Maximum
Throttle angle (at condition for 300 msec minimum)	N/A	4 deg
Intake Air Temp	-20 deg. F.	
Engine coolant temperature	-20 deg. F.	
Barometric pressure	20 in. Hg.	

Typical P2282 malfunction thresholds:
Calculated air leak of 1 lbm/min or greater that persists for at least 5 seconds.

Enhanced Thermostat Monitor

For the 2009 MY, the thermostat test has been enhanced to reduce the time it takes to identify a malfunctioning thermostat. The enhanced monitor includes a model which infers engine coolant temperature.

During a cold start, when the thermostat should be closed, the monitor uses a model of ECT to determine whether actual ECT should have crossed the Warm Up Temperature (WUT) threshold. . The engine coolant temperature warm-up model compensates for the following thermal characteristics:

1. Coolant heating (heat source):
    - Combustion heating (engine speed and load based).
    - Cooling system heaters (electric or fuel-fired - new for 2013 MY)
2. Coolant cooling (heat sink):
    - Due to cylinder cut-out (DFSO or powertrain limiting).
        - Injectors are cut but still pumping air through the engine. Increased cooling compared to engine shut-down.
    - Due to engine shut-down. (Stop/Start and Hybrid – new for 2013 MY).
3. Coolant flow rate:
    - Mechanical water pumps have been replace on some applications with clutched water pumps or electric water pumps.

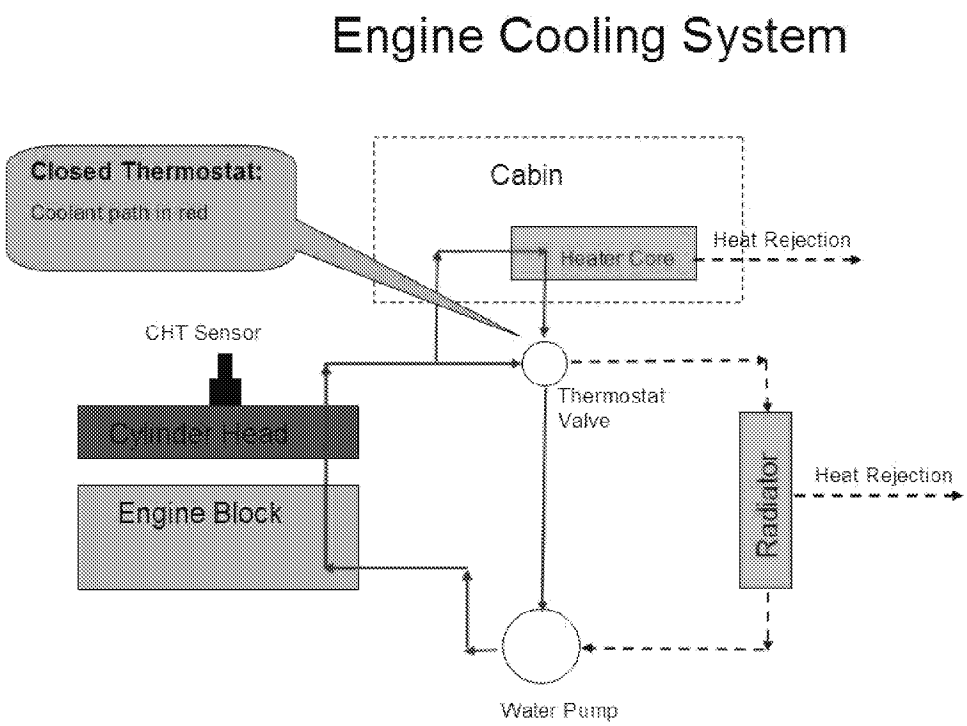

Once the ECT model exceeds the WUT threshold, after a calibratable time delay, measured ECT is compared to the same WUT threshold to determine if ECT has warmed up enough. If ECT has warmed up to at least the WUT threshold, the thermostat is functioning properly. If ECT is too low, the thermostat is most likely stuck open and a P0128 is set.

ED_002078G_00001322-00143

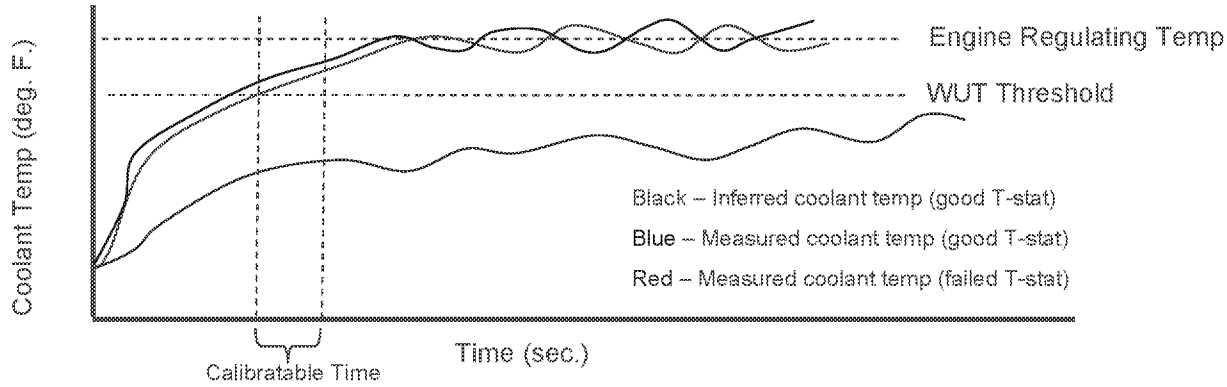

The WUT threshold is normally set to 20 degrees F below the thermostat regulating temperature.

There are some circumstances that could lead to a false diagnosis of the thermostat. These are conditions where the vehicle cabin heater is extracting more heat than the engine is making. One example where this can occur is on large passenger vans which have "dual" heaters, one heater core for the driver and front passengers and another heater core for the passengers in the rear of the vehicle. At very cold ambient temperatures, even a properly functioning thermostat may never warm up to regulating temperature. Another example is a vehicle that is started and simply sits at idle with the heater on high and the defroster fan on high.

There are two features that are used to prevent a false thermostat diagnosis. For vehicles with dual heaters, the WUT threshold is reduced at cold ambient temperatures below 50 deg F. For cases where the engine is not producing sufficient heat, a timer is used to track time at idle or low load conditions (e.g. decels). If the ratio of time at idle/low load versus total engine run time exceeds 50% at the time the fault determination is made, the thermostat diagnostic does not make a fault determination for that driving cycle, i.e. "no-call".

THERMOSTAT MONITOR OPERATION	
DTC	P0128 - Coolant Thermostat (Coolant temperature below thermostat regulating temperature)
Monitor Execution	Once per driving cycle, during a cold start
Monitoring Duration	Drive cycle dependent. Monitor completes in less than 300 seconds, when inferred ECT exceeds threshold (at 70 deg F ambient temperature)

TYPICAL THERMOSTAT MONITOR ENTRY AND COMPLETION CONDITIONS		
Entry conditions	Minimum	Maximum
Engine Coolant Temperature at start	None	125 °F
Intake Air Temperature at start (ambient temp)	20 °F	None
Inferred Percent Ethanol (flex fuel vehicles only)	Learned	N/A
Completion condition	Minimum	Maximum
Modeled ECT	172 °F	None
Time Since Modeled ECT Exceeded WUT Threshold	300 sec.	None
Time at Idle/Low Load Compared with Total Engine Run Time	None	50%

TYPICAL MALFUNCTION THRESHOLD
Engine Coolant Temperature < 172 °F (for a typical 192 °F thermostat)

Cold Start Emission Reduction Component Monitor

The Cold Start Emission Reduction Component Monitor was introduced for the 2006 MY on vehicles that meet the LEV-II emission standards. The monitor works by validating the operation of the components of the system required to achieve the cold start emission reduction strategy, namely retarded spark timing, and elevated idle airflow or VCT cam phasing.

The spark timing monitor was replaced by the Cold Start Emission Reduction System monitor in the 2007 MY. Changes to the OBD-II regulations, however, require having both a CSER system monitor and a CSER component monitor for the 2010 MY. The 2010 MY component monitor is not the same test that was introduced for the 2006 MY; rather, it has been redesigned.

Low Idle Airflow Monitor – Systems with Electronic Throttle Control

When the CSER strategy is enabled, the Electronic Throttle Control system will request a higher idle rpm, elevating engine airflow. Vehicles that have ETC and do not have a separate airflow test (P050A). Any fault that would not allow the engine to operate at the desired idle rpm during a cold start would be flagged by one of three ETC DTCs:

P2111 (throttle actuator control system stuck open),
P2112 throttle actuator control system stuck closed)
P2107 (throttle actuator control module processor/circuit test).

All three DTCs will illuminate the MIL in 2 driving cycles, and immediately illuminate the "ETC" light. These DTCS are also documented in the ETC section of this document.

For the 2009 MY, only the Fusion/Milan utilizes the CSER Component monitor with ETC.

Throttle Plate Controller and Actuator Operation:	
DTCs	P2107 – processor test (MIL) P2111 – throttle actuator system stuck open (MIL) P2112 – throttle actuator system stuck closed (MIL) Note: For all the above DTCs, in addition to the MIL, the ETC light will be on for the fault that caused the FMEM action.
Monitor execution	Continuous
Monitor Sequence	None
Monitoring Duration	60 msec for processor fault, 500 msec for stuck open/closed fault

Throttle Plate Controller and Actuator malfunction thresholds:
P2111 - Desired throttle angle vs. actual throttle angle > 6 degrees
P2112 - Desired throttle angle vs. actual throttle angle < 6 degrees
P2107 - Internal processor fault, lost communication with main CPU

ED_002078G_00001322-00145

Engine Speed and Spark Timing Component Monitor (2010 MY and beyond)

Entry Conditions and Monitor Flow

The System Monitor and 2010 Component Monitor share the same entry conditions and monitor flow. During the first 15 seconds of a cold start, the monitor checks the entry conditions, counts time in idle, observes catalyst temperature, calculates the average difference between desired and actual engine speed, and calculates the average difference between desired and commanded spark.

If the expected change in catalyst temperature is large enough, the monitor then begins the waiting period, which lasts until 300 seconds after engine start. This 5-minute wait allows time to diagnose other components and systems that affect the validity of the test. During this waiting period, there are no constraints on drive cycle and the monitor cannot be disabled without turning off the key.

If the System monitor result falls below its threshold and all of the Component monitor results are below their respective thresholds, the monitor determines whether the idle time was sufficient. If so, it considers the tests a pass and the monitor is complete. If idle time was not sufficient, the monitor does not make a pass call and does not complete. This prevents tip-ins from resulting in false passes.

Cold Start Engine Speed Monitor

Once the waiting period is complete, the monitor compares the average difference between desired and actual engine speeds to a calibratable threshold that is a function of ECT at start. If the magnitude of the discrepancy exceeds the threshold, P050A is set.

Cold Start Spark Timing Monitor

Once the waiting period is complete, the monitor compares the average difference between desired and commanded spark to a calibratable threshold that is a function of ECT at start. If the magnitude of the discrepancy exceeds the threshold, P050B is set.

CSER COMPONENT MONITOR OPERATION	
Component Monitor DTCs	P050A: Cold Start Idle Air Control System Performance P050B: Cold Start Ignition Timing Performance
Monitor Execution	Once per driving cycle, during a cold start
Monitor Sequence	Monitor data collection takes place during first 15 seconds of cold start
Sensors OK	No fault is present in any of the sensors or systems affecting the catalyst temperature model: Mass Air Flow (P0102, P0103), Throttle Position (P0122, P0123, P0222, P0223), Misfire (P0316, P0300-P0312), Injectors (P0201-P0212), Fuel System (P0171, P0172, P0174, P0175), Secondary Air (P0412, P2258), Crank Position Sensor (P0320), Ignition Coil (P0351-P0360), Intake Air Temp (P0112, P0113), Engine Coolant Temp/Cylinder Head Temp (P0117, P0118, P1289, P1290), Variable Cam Timing (P0010, P0020, P0011, P0012, P0021, P0022), Intake Manifold Runner Control (P2008).
Monitoring Duration	Monitor completes 300 seconds after initial engine start

ED_002078G_00001322-00146

TYPICAL CSER COMPONENT MONITOR ENTRY AND COMPLETION CONDITIONS		
Entry condition	Minimum	Maximum
Barometric Pressure	22 in. Hg	
Engine Coolant Temperature at Start	35 °F	100 °F
Catalyst Temperature at Start	35 °F	125 °F
Fuel Level	15%	
No Torque Reduction by Injector Cutout		
Power Takeout Not Active		
Completion condition	Minimum	Maximum
Length of Time Entry Conditions are Satisfied	11 sec.	
Expected Change in Catalyst Temperature	50 °F	
Time in Idle	10 sec.	
Selected Gear	Neutral	Drive

TYPICAL CSER COMPONENT MONITOR MALFUNCTION THRESHOLDS
Engine speed discrepancy > 200 rpm
Spark timing discrepancy > 10 deg.

Cold Start Variable Cam Timing Monitor (2008 MY and beyond)

If the VCT cam phasing is used during a cold start to improved catalyst heating, the VCT system is checked functionally by monitoring the closed loop cam position error correction. If the proper cam position cannot be maintained and the system has an advance or retard error greater than the malfunction threshold, a cold start emission reduction (CSER) VCT control malfunction is indicated (P052A/P052B (Bank 1), P052C/P052D (Bank2). This test is the same test that was used previously for monitoring the VCT system under Comprehensive Component Monitoring requirements.

CSER VCT Target Error Check Operation:]	
DTCs	P052A – Cold start camshaft position timing over-advanced (Bank 1) P052B – Cold start camshaft timing over-retarded (Bank 1) P052C – Cold start camshaft timing over-advanced (Bank 2) P052D – Cold start camshaft timing over-retarded (Bank 2)
Monitor execution	Continuous
Monitor Sequence	None
Sensors OK	
Monitoring Duration	5 seconds

Typical CSER VCT target error entry conditions:		
Entry condition	Minimum	Maximum
VCT control enabled and commanded to advance or retard cam during CSER	n/a	n/a
Time since start of CSER cam phase monitoring		60 seconds

Typical CSER VCT target error malfunction thresholds:
CSER Response/target error - VCT over-advance: 11 degrees CSER Response/target error - VCT over-retard: 11 degrees CSER Response/Stuck Pin – 10 degrees phasing commanded, and not seeing at least 2 degrees of movement.

ED_002078G_00001322-00148

Cold Start Emission Reduction System Monitor

The Cold Start Emission Reduction System Monitor is being introduced for the 2007 MY on vehicles that meet the LEV-II emission standards. The System Monitor detects the lack of catalyst warm up resulting from a failure to apply sufficient CSER during a cold start. It does this by using the inferred catalyst temperature model to determine how closely the actual catalyst temperature follows the expected catalyst temperature during a cold start. How closely the actual temperature follows the expected temperature is reflected in a ratio which is compared with a calibratable threshold.

Temperatures Used

The actual catalyst temperature is the same inferred catalyst temperature that is used by other portions of the engine control system, including the CSER control system. The inputs to this actual temperature are measured engine speed, measured air mass, and commanded spark.

The expected catalyst temperature is calculated using the same algorithm as the actual catalyst temperature, but the inputs are different. Desired engine speed replaces measured engine speed, desired air mass replaces measured air mass, and desired cold start spark replaces commanded spark. The resulting temperature represents the catalyst temperature that is expected if CSER is functioning properly.

Ratio Calculation

A ratio is calculated to reflect how closely the actual temperature has followed the expected temperature. This ratio is the difference between the two temperatures at a certain time-since-start divided by the increase in expected temperature over the same time period. The ratio, then, provides a measure of how much loss of catalyst heating occurred over that time period.

This ratio correlates to tailpipe emissions. Therefore applying a threshold to it allows illumination of the MIL at the appropriate emissions level. The threshold is a function of ECT at engine start.

General CSER Monitor Operation

During the first 15 seconds of a cold start, the monitor checks the entry conditions, counts time in idle, and observes catalyst temperature.

If the expected change in catalyst temperature is large enough, the monitor calculates the ratio as described above. Otherwise the monitor does not make a call.

The monitor then begins the waiting period, which lasts from the time the ratio is calculated (15 seconds after engine start) until 300 seconds after engine start. This 5-minute wait allows time to diagnose other components and systems that affect the validity of the catalyst temperature model. During this waiting period, there are no constraints on drive cycle and the monitor cannot be disabled without turning off the key.

At the end of the waiting period, if no other faults that could compromise the validity of the catalyst temperature model are found, the monitor compares the ratio to the threshold.

If the ratio exceeds the threshold, the monitor considers the test a fail, and the monitor is complete.

If the ratio falls below the threshold and all of the component monitor results are below their respective thresholds, the monitor determines whether the idle time was sufficient. If so, it considers the test a pass and the monitor is complete. If idle time was not sufficient, the monitor does not make a pass call and does not complete. This prevents tip-ins from resulting in false passes.

ED_002078G_00001322-00149

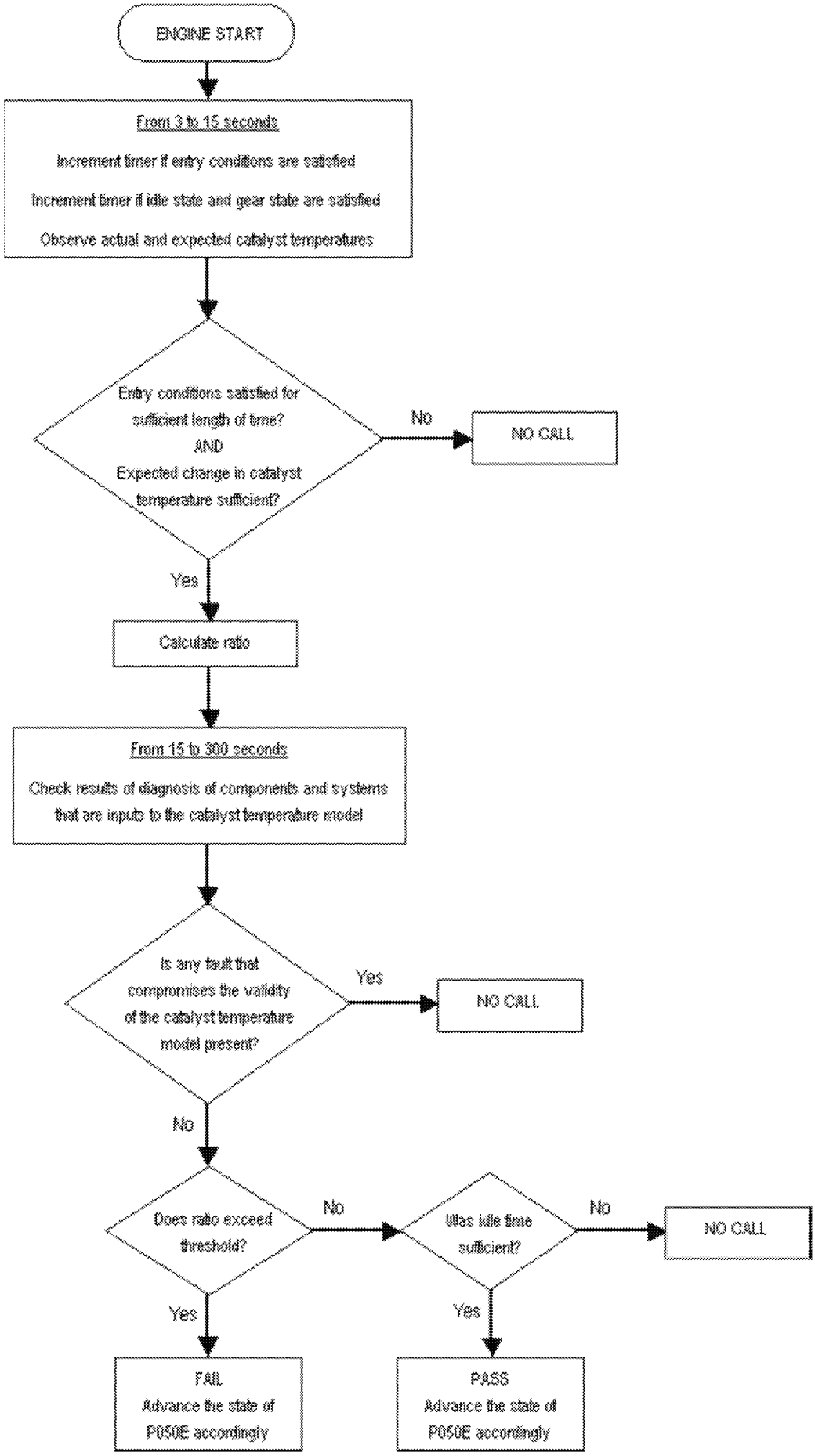
ENGINE START
From 3 to 15 seconds
Increment timer if entry conditions are satisfied
Increment timer if idle state and gear state are satisfied
Observe actual and expected catalyst temperatures
Entry conditions satisfied for sufficient length of time? AND Expected change in catalyst temperature sufficient?
No
NO CALL
Yes
Calculate ratio
From 15 to 300 seconds
Check results of diagnosis of components and systems that are inputs to the catalyst temperature model
Is any fault that compromises the validity of the catalyst temperature model present?
Yes
NO CALL
No
Does ratio exceed threshold?
No
Was idle time sufficient?
No
NO CALL
Yes
Yes
FAIL
Advance the state of P050E accordingly
PASS
Advance the state of P050E accordingly

CSER SYSTEM MONITOR OPERATION	
System Monitor DTC	P050E: Cold Start Engine Exhaust Temperature Too Low
Monitor Execution	Once per driving cycle, during a cold start
Monitor Sequence	Monitor data collection takes place during first 15 seconds of cold start
Sensors OK	No fault is present in any of the sensors or systems affecting the catalyst temperature model: Mass Air Flow (P0102, P0103), Throttle Position (P0122, P0123, P0222, P0223), Misfire (P0316, P0300-P0312), Injectors (P0201-P0212), Fuel System (P0171, P0172, P0174, P0175), Secondary Air (P0412, P2258), Crank Position Sensor (P0320), Ignition Coil (P0351-P0360), Intake Air Temp (P0112, P0113), Engine Coolant Temp/Cylinder Head Temp (P0117, P0118, P1289, P1290), Variable Cam Timing (P0010, P0020, P0011, P0012, P0021, P0022), Intake Manifold Runner Control (P2008).
Monitoring Duration	Monitor completes 300 seconds after initial engine start

TYPICAL CSER SYSTEM MONITOR ENTRY AND COMPLETION CONDITIONS		
Entry condition	Minimum	Maximum
Barometric Pressure	22 in. Hg	
Engine Coolant Temperature at Start	35 °F	100 °F
Catalyst Temperature at Start	35 °F	125 °F
Fuel Level	15%	
No Torque Reduction by Injector Cutout		
Power Takeout Not Active		
Completion condition	Minimum	Maximum
Length of Time Entry Conditions are Satisfied	11 sec.	
Expected Change in Catalyst Temperature	50 °F	
Time in Idle	10 sec.	
Selected Gear	Neutral	Drive

TYPICAL CSER SYSTEM MONITOR MALFUNCTION THRESHOLDS
Cold start warm-up temperature ratio > 0.4

ED_002078G_00001322-00151

Variable Cam Timing System Monitor

Variable Cam Timing (VCT) enables rotation of the camshaft(s) relative to the crankshaft (phase-shifting) as a function of engine operating conditions. There are four possible types of VCT with DOHC engines:

- Intake Only (phase-shifting only the intake cam);
- Exhaust Only (phase-shifting only the exhaust cam);
- Dual Equal (phase-shifting the intake and exhaust cams equally);
- Twin Independent (phase-shifting the intake and exhaust cams independently).

All four types of VCT are used primarily to increase internal residual dilution at part throttle to reduce NOx, and to improve fuel economy. This allows for elimination the external EGR system.

With Exhaust Only VCT, the exhaust camshaft is retarded at part throttle to delay exhaust valve closing for increased residual dilution and to delay exhaust valve opening for increased expansion work.

With Intake Only VCT, the intake camshaft is advanced at part throttle and WOT (at low to mid-range engine speeds) to open the intake valve earlier for increased residual dilution and close the intake valve earlier in the compression stroke for increased power. When the engine is cold, opening the intake valve earlier warms the charge which improves fuel vaporization for less HC emissions; when the engine is warm, the residual burned gasses limit peak combustion temperature to reduce NOx formation.

With Dual Equal VCT, both intake and exhaust camshafts are retarded from the default, fully advanced position to increase EGR residual and improve fuel economy by reducing intake vacuum pumping losses. The residual charge for NOx control is obtained by backflow through the late-closing exhaust valve as the piston begins its intake stroke.

The VCT system hardware consists of a control solenoid and a pulse ring on the camshaft. The PCM calculates relative cam position using the CMP input to process variable reluctance sensor pulses coming from the pulse ring mounted on the camshaft. Each pulse wheel has N + 1 teeth where N = the number of cylinders per bank. The N equally spaced teeth are used for cam phasing; the remaining tooth is used to determine cylinder # 1 position. Relative cam position is calculated by measuring the time between the rising edge of profile ignition pickup (PIP) and the falling edges of the VCT pulses.

The PCM continually calculates a cam position error value based on the difference between the desired and actual position and uses this information to calculate a commanded duty cycle for the VCT solenoid valve. When energized, engine oil is allowed to flow to the VCT unit thereby advancing and retarding cam timing. The variable cam timing unit assembly is coupled to the camshaft through a helical spline in the VCT unit chamber. When the flow of oil is shifted from one side of the chamber to the other, the differential change in oil pressure forces the piston to move linearly along the axis of the camshaft. This linear motion is translated into rotational camshaft motion through the helical spline coupling. A spring installed in the chamber is designed to hold the camshaft in the low-overlap position when oil pressure is too low (~15 psi) to maintain adequate position control. The camshaft is allowed to rotate up to 30 degrees.

Although the VCT system has been monitored under Comprehensive Component Monitoring requirements for many years, a new, emission-based VCT monitor is being introduced for the 2006 MY on vehicles that meet LEV-II emission standards. The intent of the new VCT monitoring requirements is to detect slow VCT system response that could cause emissions to increase greater than 1.5 * std. in addition to detecting functional problems (target errors).

The new logic calculates the instantaneous variance in actual cam position (the squared difference between actual cam position and commanded cam position), then calculates the long term variance using a rolling average filter (Exponentially Weighted Moving Average). Continued, slow response from the VCT system will eventually accumulate large variances.

ED_002078G_00001322-00152

This same logic will also detect target errors that were detected by the previous CCM monitor. If the VCT system is stuck in one place, the monitor will detect a variance which will quickly accumulate.

There are two variance indices, one that monitors cam variance in the retard direction and the other for the advance direction,. If either variance index is greater than the malfunction threshold, a VCT slow response/target error malfunction will be indicated (P0011, P0012, P0014, P0015 Bank 1, P0021, P0022, P0024, P0025 Bank 2). Target errors will tend to generate only a single over-advanced or over-retarded code while slow response will tend to generate both codes.

In addition, logic has been added to determine whether the camshaft and crankshaft are misaligned by one or more teeth. This test calculates the absolute offset between one of the camshaft teeth and the crankshaft missing tooth at idle when that can is at its stop. If the error is greater than the malfunction threshold, a cam/crank misalignment error will be indicated (P0016 Bank 1, P0018 Bank 2).

For systems that phase the cams immediately off of a cold start for reducing emissions or CSER (Cold Start Emissions Reduction) the cam position is monitored for functionality during this period of time. The logic calculates the instantaneous variance in actual cam position (the squared difference between actual cam position and commanded cam position), then calculates a longer term variance using a rolling average filter (Exponentially Weighted Moving Average) This is similar to the target error logic described above, but uses separate time constants and thresholds. There are two variance indices, one that monitors cam variance in the retard direction and the other for the advance direction,. If either variance index is greater than the malfunction threshold, a VCT slow response/target error malfunction will be indicated (P052A, P052B, P054A, P054B (Bank 1), P052C, P052D, P054C, P054D (Bank 2). Target errors will tend to generate only a single over-advanced or over-retarded code while slow response will tend to generate both codes.

The in-use performance ratio numerator for the VCT monitor can be incremented only if the VCT system has been monitored for both functional and response faults.

Similar to the previous CCM monitor, the VCT solenoid output driver in the PCM is checked electrically for opens and shorts (P0010 Bank 1, P0020 Bank 2).

ED_002078G_00001322-00153

VCT Monitor Operation:	
DTCs	P0010 - Camshaft Position Actuator Circuit (Bank 1) P0011 - Intake Camshaft Position Timing - Over-Advanced (Bank 1) P0012 - Intake Camshaft Position Timing - Over-Retarded (Bank 1) P0014 - Exhaust Camshaft Position Timing - Over-Advanced (Bank 1) P0015 - Exhaust Camshaft Position Timing - Over-Retarded (Bank 1) P0016 - Crank/Cam Position Correlation (Bank 1) P0020 - Camshaft Position Actuator Circuit (Bank 2) P0021 - Intake Camshaft Position Timing - Over-Advanced (Bank 2) P0022 - Intake Camshaft Position Timing - Over-Retarded (Bank 2) P0024 - Exhaust Camshaft Position Timing - Over-Advanced (Bank 2) P0025 - Exhaust Camshaft Position Timing - Over-Retarded (Bank 2) P0018 – Crank/Cam Position Correlation (Bank 2)
Monitor execution	Continuous
Monitor Sequence	None
Sensors OK	IAT, ECT, EOT, IMRC, TP, MAF, CKP, and CMP
Monitoring Duration	5 - 10 seconds for circuit faults and functional checks, 300 - 900 seconds for target error

Typical VCT response/functional monitor entry conditions:		
Entry condition	Minimum	Maximum
Engine RPM (for P0016/P0018 only)	500	4500
Engine Coolant Temperature	18 °F	
Engine Oil Temperature		280 °F
VCT control enabled and commanded to advance or retard cam **	n/a	n/a
** VCT control of advance and retard by the engine is disabled in crank mode, when engine oil is cold (< 150 °F), while learning the cam/crank offset, while the control system is "cleaning" the solenoid oil passages, throttle actuator control in failure mode, and if one of the following sensor failures occur: IAT, ECT, EOT, MAF, TP, CKP, CMP, or IMRC.		

ED_002078G_00001322-00154

Typical VCT monitor malfunction thresholds:
VCT solenoid circuit: Open/short fault set by the PCM driver
Cam/crank misalignment: > or = one tooth difference, or 16 crank degrees
Response/target error - VCT over-advance variance too high: 40 to 700 degrees squared
Response/target error - VCT over-retard variance too high: 40 to 700 degrees squared
Response/target error - Cam bank-to-bank variance too high: 40 to 700; degrees squared

J1979 VCT Monitor Mode $06 Data			
Monitor ID	Test ID	Description for CAN	Units
$35	$80	Camshaft Advanced Position Error Bank 1 (P011/P0014)	Unsigned, Angular degrees
$35	$81	Camshaft Retarded Position Error Bank 1 (P0012/P0015)	Unsigned, Angular degrees
$36	$80	Camshaft Advanced Position Error Bank 2 (P0021/P0024)	Unsigned, Angular degrees
$36	$81	Camshaft Retarded Position Error Bank 2 (P0022/P0025)	Unsigned, Angular degrees

ED_002078G_00001322-00155

Gasoline Direct Injection

Ford is adding gasoline Direct Injection (DI) to many of its engines for improved fuel economy, performance and emissions. Most engines will also incorporate a turbocharger when they go to DI, however, some engines will not. Engines with turbo charging are designated as GTDI (Gasoline Turbo Direct Injection) and engine without turbo charging are designated GDI (Gasoline Direct Injection).

The fuel systems for both of these variants are very similar. The only difference is that the GDI engine does not have the turbo controls that consist of the Turbocharger, Wastegate Control Valve, Compressor Bypass Valve and the sensor that contains the Throttle Inlet Pressure Sensor (TCB-A) and Throttle Charge Temperature Sensor (CACT)

Ford's first GTDI engine was introduced in the 2010 MY. The 3.5 L GTDI engine was based off the 3.5L IVCT engine used in the Taurus, Edge, etc. The GTDI version was introduced in the 2010 MY Ford Flex, Lincoln MKR (CUV), Taurus and Lincoln MKS (sedan).

The PCM for the GTDI engine controls the following sensors and actuators:

Outputs/Actuators: Electronic Throttle Control, Variable Cam Timing (Intake only), Wastegate Control Valve, Compressor Bypass Valve, Ignition timing, Fuel injectors (Direct Injection), Fuel Rail Pressure Control Valve

Inputs/Sensors: MAP, Manifold Charge Temp, Throttle Inlet Pressure, Throttle Charge Temp, Intake Air Temp, BARO, Cylinder Head Temp, Cam & Throttle positions, Engine Speed, Fuel Rail Pressure, UEGO (front, control), HEGO (rear fuel trim)

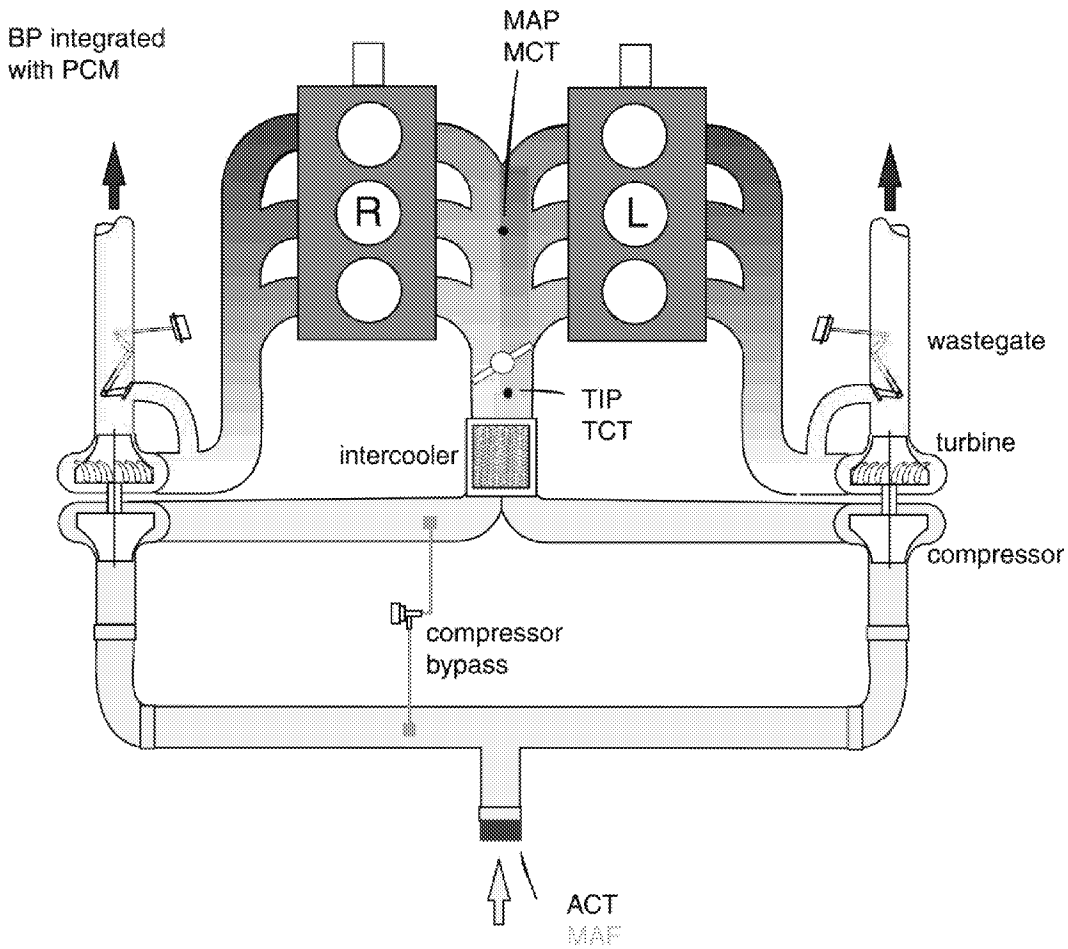

For the 2011 MY, 3.5L/3.7L engine was upgraded from ICVT (Intake-only Variable Cam Timing) to TIVCT (Twin Independent Variable Cam Timing. The 3.5L GTDI engine in the F-150 is based off this upgraded engine (3.5L GTDI TIVCT). The DI and turbo controls, however, are unchanged.

For the 2011 MY, the Explorer will be available with a 2.0L GTDI engine with TIVCT. For 2012 MY, it is also available in the Edge. The DI and turbo controls are similar to the 3.5L GTDI with the exception that there is only one turbocharger.

For the 2012 MY, the Focus will be available with a 2.0L GDI engine with TIVCT. The controls are similar to the 2.0L GTDI engine. The only difference is that the GDI engine does not have the turbo controls that consist of the Turbocharger, Wastegate Control Valve, Compressor Bypass Valve and the sensor that contains the Throttle Inlet Pressure Sensor (TCB-A) and Throttle Charge Temperature Sensor (CACT)

Because GDI engine controls and OBD are a subset of the GDTI engine controls and OBD, they will all be described in this chapter.

Intake Air Temperature 1 Sensor (IAT1)

The Intake Air Temperature 1 sensor (also called Air Charge Temperature) is used for the inference of ambient temperature for several PCM strategy features. In previous designs, the Intake Air Temperature 1 sensor was physically integrated with the Mass Air Flow (MAF) sensor. In this design, the Intake Air Temperature 1 sensor is a stand-alone sensor and is mounted near the air cleaner.

Intake Air Temperature 1 Sensor Circuit Range Check	
DTCs	P0112 Intake Air Temperature Sensor 1 Circuit Low (Bank 1) P0113 Intake Air Temperature Sensor 1 Circuit High (Bank 1)
Monitor execution	continuous
Monitor Sequence	none
Sensors OK	not applicable
Monitoring Duration	5 seconds to register a malfunction

Typical Intake Air Temperature 1 Sensor Circuit Range Check Malfunction Thresholds
P0112 IAT1 voltage < 0.244 volts
P0113 IAT1 voltage > 4.96 volts

Intake Air Temperature Sensor 1 Circuit Intermittent Check	
DTCs	P0114 Intake Air Temperature Sensor 1 Intermittent/Erratic (Bank 1)
Monitor execution	continuous
Monitor Sequence	none
Sensors OK	not applicable
Monitoring Duration	counts intermittent events per trip

Typical Air Charge Temperature Sensor Check Malfunction Thresholds
10 intermittent out-of-range events per driving cycle

Charge Air Cooler Temperature Sensor (CACT)

The Charge Air Cooler Temperature sensor (also known as Throttle Charge Temperature) refines the estimate of air flow rate through the throttle.

Throttle Charge Temperature Sensor Circuit Range Check	
DTCs	P007C Charge Air Cooler Temperature Sensor Circuit Low (Bank 1) P007D Charge Air Cooler Temperature Sensor Circuit High (Bank 1)
Monitor execution	continuous
Monitor Sequence	none
Sensors OK	not applicable
Monitoring Duration	5 seconds to register a malfunction

Typical Throttle Charge Temperature Sensor Circuit Range Check Malfunction Thresholds
P007C CACT voltage < 0.244 volts
P007D CACT voltage > 4.96 volts

Intake Air Temperature 2 Sensor (IAT2)

The Intake Air Temperature 2 sensor (also known as Manifold Charge Temperature) is mounted to the intake manifold and is used to compute cylinder air charge and provide input for various spark control functions. It is integrated with the intake manifold pressure sensor.

Manifold Charge Temperature Sensor Circuit Range Check	
DTCs	P0097 Intake Air Temperature Sensor 2 Circuit Low (Bank 1) P0098 Intake Air Temperature Sensor 2 Circuit High (Bank 1)
Monitor execution	Continuous
Monitor Sequence	None
Sensors OK	not applicable
Monitoring Duration	5 seconds to register a malfunction

Typical Manifold Charge Temperature Sensor Circuit Range Malfunction Thresholds
P0097 IAT2 voltage < 0.244 volts
P0098 IAT2 voltage > 4.96 volts

IAT1, CACT, IAT2, EOT Temperature Sensor Transfer Function		
Volts	A/D counts in PCM	Temperature, degrees F
4.89	1001	-40
4.86	994	-31
4.81	983	-22
4.74	970	-13
4.66	954	-4
4.56	934	5
4.45	910	14
4.30	880	23
4.14	846	32
3.95	807	41
3.73	764	50
3.50	717	59
3.26	666	68
3.00	614	77
2.74	561	86
2.48	508	95
2.23	456	104
1.99	407	113
1.77	361	122
1.56	319	131
1.37	280	140
1.20	246	149
1.05	215	158
0.92	188	167
0.80	165	176
0.70	144	185
0.61	126	194
0.54	110	203
0.47	96	212
0.41	85	221
0.36	74	230
0.32	65	239
0.28	57	248
0.25	51	257
0.22	45	266
0.19	40	275
0.17	35	284
0.15	31	293
0.14	28	302

ED_002078G_00001322-00159

IAT1, CACT, IAT2 Key-Up Correlation Check

Once the IAT1, CACT, IAT2 are confirmed to be in-range, the key-up correlation test compares the three temperatures on key-up after a long period off key-off time (6 hours). The three-way correlation test is run only once per power-up.

After a long key-off period, the three temperature sensors are expected to report nearly the same temperature. The exception to this is when a block heater is used. Block heater use can cause these three air temperature sensors to widely differ from each other. To detect if an engine coolant heater is active we compare Cylinder Head Temperature (CHT) to Transmission Fluid Temperature (TFT). A significant temperature difference (10°F) indicates block heater activity.

The IAT, CACT, and IAT2 are mounted along the engine air intake system.

- The IAT is mounted in the engine air inlet (near air cleaner).
- The CACT is mounted near the throttle inlet.
- The IAT2 is mounted inside the intake manifold.

If the sensors all agree, no malfunction is indicated and the test is complete. Specifically, the three way check compares 3 sensor pairings. All three pairings must correlate to pass this test.

- IAT and CACT agree within a tolerance (±30°F) and
- CACT and IAT2 agree within a tolerance (±30°F) and
- IAT2 and IAT agree within a tolerance (±30°F).

Case 1 At least two correlation pairings are within tolerance (±30°F). All sensors pass.

Case 2 One correlation pairing is within tolerance (±30°F). Those two sensors that correlate pass, the third sensor is flagged as faulted.

Case 3 Zero correlation pairings are within tolerance (±30°F). P00CE Intake Air Temperature Measurement System – Multiple Sensor Correlation

Engine Air Temperature Sensor Key-Up Correlation Check	
DTCs	P0111 Intake Air Temperature Sensor 1 Circuit Range/Performance (Bank 1) P007B Charge Air Cooler Temperature Sensor Circuit Range/Performance (Bank 1) P0096 Intake Air Temperature Sensor 2 Circuit Range/Performance (Bank 1) P00CE Intake Air Temperature Measurement System – Multiple Sensor Correlation
Monitor execution	Once per driving cycle, at start-up
Monitor Sequence	None
Sensors OK	ECT/CHT, IAT1, CACT, IAT2, TFT
Monitoring Duration	Immediate

Engine Air Temperature Sensor Key-Up Correlation Check Entry Conditions		
Entry condition	Minimum	Maximum
Engine off (soak) time	6 hours	
CHT – TFT at start (block heater inferred)		+10 °F

Typical Engine Air Temperature Sensor Key-Up Correlation Check Malfunction Thresholds
CHT at least 10°F hotter than TFT means block heater detected.

IAT1, CACT, IAT2 Out of Range Hot Check

The IAT1, CACT, IAT2 are all checked for maximum expected temperature readings during a steady state driving condition. When parked at hot ambient temperatures or after heavy load operation, these temperatures can climb to unusually high temperatures thus the "too hot" check is not done at those conditions.

Engine Air Temperature Sensor Out of Range Hot Check	
DTCs	P0111 Intake Air Temperature Sensor 1 Circuit Range/Performance (Bank 1) P007B Charge Air Cooler Temperature Sensor Circuit Range/Performance (Bank 1) P0096 Intake Air Temperature Sensor 2 Circuit Range/Performance (Bank 1)
Monitor execution	Continuous
Monitor Sequence	None
Sensors OK	ECT/CHT, IAT, VSS
Monitoring Duration	250 seconds to register a malfunction

Engine Air Temperature Sensor Out of Range Hot Check Entry Conditions		
Entry condition	Minimum	Maximum
Vehicle speed	40 mph	
Time above minimum vehicle speed (if driving req'd)	5 min	
For IAT1, Load below a maximum load threshold	1.0	

Typical Engine Air Temperature Sensor Out of Range Hot Check Malfunction Thresholds
P0111 IAT1 > 150°F
P007B CACT > 220°F
P0096 IAT2 > 240°F

Barometric Pressure Sensor (BARO)

The Barometric Pressure Sensor (BARO) is used to directly measure barometric pressure and for exhaust back pressure estimation. (Exhaust back pressure influences speed density based air charge computation.) The BARO sensor is directly mounted to the PCM circuit board.

The BARO sensor has a high accuracy operating range of 60 to 115 kPa (17.7 to 34.0 "Hg) and a full operating range of 7.6 to 121.6 kPa. The voltage is electrically clipped between 0.3 and 4.8 volts.

A P2228 or P2229 DTC indicates that either the sensor is electrically faulted or the sensed barometric pressure is outside the normal operating range.

BARO Sensor Transfer Function		
Vout=Vref * (0.007895 * Pressure (in kPa)		
Volts	Pressure, kPa	Pressure, Inches Hg
0.3	7.6	2.2
0.5	12.7	3.8
2.638	60	17.7
4.54	115	34.0
4.75	120.3	35.5
4.8	121.6	35.9

Barometric Pressure Sensor Range Check	
DTCs	P2228 Barometric Pressure Circuit Low P2229 Barometric Pressure Circuit High
Monitor execution	continuous
Monitor Sequence	None
Sensors OK	not applicable
Monitoring Duration	5 seconds to register a malfunction

Typical Barometric Pressure Sensor Range Check Malfunction Thresholds
P2228 BP < 2.0 volts (above 15,000 ft altitude)
P2229 BP > 4.4 volts (below -1,000 ft altitude)

ED_002078G_00001322-00163

Turbocharger Boost Sensor A (TCB-A)

The Turbocharger Boost Sensor A (also known as Throttle Inlet Pressure (TIP)) is the feedback sensor for turbo boost control. Boost control algorithm computes desired boost from operating conditions and adjusts the pneumatically-controlled boost pressure limit to achieve that desired boost pressure. TCB-A is also used to compute air flow rate through the throttle independently of the primary air charge computation for torque monitoring (and intake manifold leak detection).

The TCB-A sensor is physically integrated with the Charge Air Cooler Temperature Sensor. The boost sensor has a specified range of 20 to 300 kPa. The voltage is electrically clipped between 0.3 to 4.8 volts,

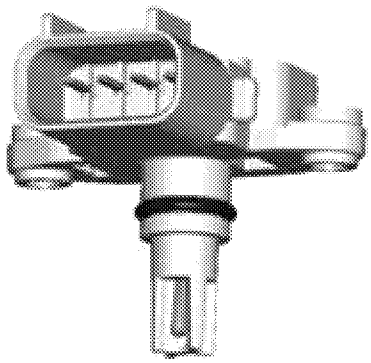

TCB-A and MAP Sensor Transfer Function		
Vout=(Vref / 5) * (0.0146428 * Pressure (in kPa) + 0.1072)		
Volts	Pressure, kPa	Pressure, Inches Hg
0.3	13.16	3.89
0.4	20	5.91
0.986	60.0	17.72
2.157	140	41.34
3.329	220.0	64.97
4.5	300	88.59
4.8	320.49	94.64

Throttle Inlet Pressure Sensor Range Circuit Check	
DTCs	P0237 Turbocharger/Supercharger Boost Sensor A Circuit Low P0238 Turbocharger/Supercharger Boost Sensor A Circuit High
Monitor execution	continuous
Monitor Sequence	None
Sensors OK	not applicable
Monitoring Duration	5 seconds to register a malfunction

Typical Throttle Inlet Pressure Sensor Range Circuit Check Malfunction Thresholds
P0237 TCB-A voltage < 0.19 volts
P0238 TCB_A voltage > 4.88 volts

Throttle Inlet Pressure Sensor Range Circuit Intermittent Check	
DTCs	P025E Turbocharger/Supercharger Boost Sensor "A" Intermittent/Erratic
Monitor execution	continuous
Monitor Sequence	none
Sensors OK	not applicable
Monitoring Duration	counts intermittent events per trip

Typical Throttle Inlet Pressure Sensor Range Circuit Malfunction Thresholds
10 intermittent out-of-range events per driving cycle

Intake Manifold Pressure (MAP) Sensor

The Manifold Absolute Pressure (MAP) sensor is used for the Speed Density air charge calculation.

The MAP sensor is physically integrated with the Intake Air Temperature 2 sensor. The MAP sensor has a specified range of 10 to 200 kPa. The voltage is electrically clipped between 0.3 to 4.8 volts,

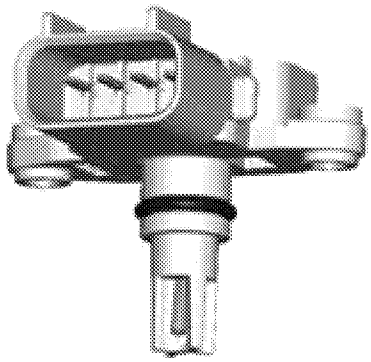

TCB-A nd MAP Sensor Transfer Function		
Vout=Vref * (0.0044736 * Pressure (in kPa) + 0.035263)		
Volts	Pressure, kPa	Pressure, Inches Hg
0.3	5.53	1.63
0.40	10.0	2.95
1.630	65.0	19.19
2.301	95.0	28.05
3.643	155.0	45.77
4.65	200.0	59.06
4.8	206.71	61.04

Intake Manifold Pressure Sensor Range Circuit Check	
DTCs	P0107 Manifold Absolute Pressure/BARO Sensor Low P0108 Manifold Absolute Pressure/BARO Sensor High
Monitor execution	continuous
Monitor Sequence	None
Sensors OK	not applicable
Monitoring Duration	5 seconds to register a malfunction

Typical Intake Manifold Pressure Sensor Range Circuit Check Malfunction Thresholds
P0107 MAP voltage < 0.19 volts
P0108 MAP voltage > 0.4.88 volts

Intake Manifold Pressure Sensor Range Circuit Intermittent Check	
DTCs	P0109 Manifold Absolute Pressure/BARO Sensor Intermittent
Monitor execution	continuous
Monitor Sequence	none
Sensors OK	not applicable
Monitoring Duration	counts intermittent events per trip

Typical Intake Manifold Pressure Sensor Range Circuit Malfunction Thresholds
10 intermittent out-of-range events per driving cycle

BARO, TCB-A, MAP Sensor 3-Way Correlation Check at Key-Up

At key-up BARO, TCB-A, and MAP are compared. If any two agree and one does not, that sensor is declared faulted.

BP, TIP, MAP Sensor 3-Way Correlation Check at Key-Up	
DTCs	P2227 P0236 P0106 Barometric Pressure Circuit Range/Performance
Monitor execution	At key-up
Monitor Sequence	None
Sensors OK	BP, MAP, TIP
Monitoring Duration	0.2 seconds

BP, TIP, MAP Sensor 3-Way Correlation Check at Key-Up Entry Conditions		
Entry condition	Minimum	Maximum
Engine off (soak) time	10 seconds	
Battery Voltage	6.75 volts	

Typical BP, TIP, MAP Sensor 3-Way Correlation Check at Key-Up Malfunction Thresholds
|TCB-A – MAP| < 2.72"Hg
|BARO – MAP| < 2.03"Hg
|BARO – TCB-A| < 2.14"Hg

ED_002078G_00001322-00169

BARO, TCB-A and TCB-A, MAP Sensor 2-Way Correlation Check

Should a BARO, TCB-A, or MAP sensor pass the key-on test but become faulted during operation, two air pressure sensor correlation check are made.

- At low engine air flows no turbocharger boost is commanded and BARO should be very close to TCB-A.
- In certain operation regions, MAP can be estimated from TCB-A, throttle angle, and engine speed (a.k.a. speed-throttle).

These two correlations are then used to infer if any of the three air pressure sensors are faulted

BARO, TCB-A Sensor 2-Way Correlation Check Entry	
DTCs	P2227 Barometric Pressure Sensor "A" Circuit Range/Performance P0236 Turbocharger/Supercharger Boost Sensor "A" Circuit Range/Performance P0106 Barometric Pressure Circuit Range/Performance
Monitor execution	Continuous
Monitor Sequence	None
Sensors OK	BP, TIP, MAP
Monitoring Duration	10 seconds

BARO, TCB-A Sensor 2-Way Correlation Check Entry Conditions		
Entry condition	Minimum	Maximum
Low TP		4.0°
Low engine rpm		1500 rpm

Typical BARO, TCB-A Sensor 2-Way Correlation Check Entry Malfunction Thresholds	
pass	(|BARO – TCB-A| < 5.5"Hg) AND (|MAP – Estimated MAP| < 3.5"Hg)
P2227	(|BARO – TCB-A| > 5.5"Hg) AND (|MAP – Estimated MAP| < 1.8"Hg)
P0106	(|BARO – TCB-A| < 1.8"Hg) AND (|MAP – Estimated MAP| > 3.5"Hg)
P0236	(if none of above conditions met)

Compressor Bypass Valve(s)

The compressor bypass valve(s) is used to prevent backflow though the turbocharger compressors when the throttle is rapidly closed to avoid an undesirable audible noise. The high pressure downstream of the compressor bypasses the compressor as it travels upstream when the valve is open. In this application, two compressor bypass valves are used to establish a sufficient bypass flow rate. The compressor bypass valve(s) are checked for electrical faults.

Compressor Bypass Valve Circuit Check Operation:	
DTCs	P0034 Turbocharger/Supercharger Bypass Valve "A" Control Circuit Low P0035 Turbocharger/Supercharger Bypass Valve "A" Control Circuit High P00C1 Turbocharger/Supercharger Bypass Valve "B" Control Circuit Low P00C2 Turbocharger/Supercharger Bypass Valve "B" Control Circuit High
Monitor execution	Continuous
Monitor Sequence	None
Monitoring Duration	5 seconds

Compressor Bypass Valve Circuit malfunction thresholds:
PCM smart driver hardware detects faults for circuit short to battery, short to ground, and open circuit. Fault status reported to PCM to set appropriate DTC.

ED_002078G_00001322-00171

Wastegate Pneumatic Solenoid Valve

The wastegate (one per turbocharger) allows exhaust pressure to bypass the turbocharger's turbine, to control compressor speed (on the same shaft), and thus boost pressure. The wastegate controller is actually a mechanical-pneumatic boost pressure controller. Its boost pressure limit can be increased within a limited range by altering the pressure "seen" by the pneumatic actuator. The wastegates are only controlled indirectly by the PCM via the wastegate pneumatic solenoid.

A high pressure on the wastegate actuator's diaphragm tends to open the wastegate. The solenoid valve normally connects compressor out pressure (boost) to the wastegate actuator's diaphragm, resulting in the regulation of maximum boost pressure (to a constant value). Using the wastegate vent solenoid to partially vent (reduce) that control pressure increases the regulated maximum boost.

As the compressor outlet pressure increases, a pneumatically powered actuator opens each turbocharger wastegate to limit compressor outlet pressure. The wastegate pneumatic solenoid valve modulates that feedback pressure to increase the boost pressure limit. A duty cycle of 100% vents feedback thus eliminating any wastegate controlled boost limit. A duty cycle of 0% results in the base boost limit of approximately 5 psi gauge.

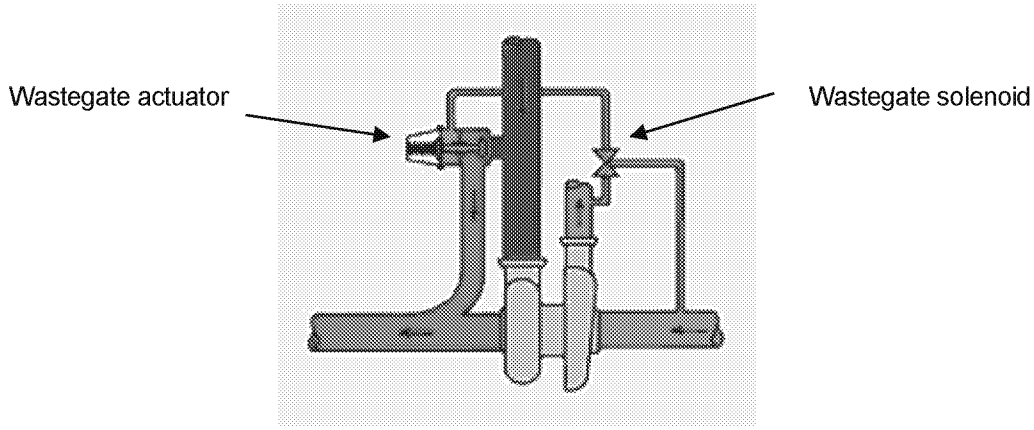

Wastegate Pneumatic Solenoid Valve Circuit Check Operation	
DTCs	P0245 Turbocharger/Supercharger Wastegate Solenoid A Low P0246 Turbocharger/Supercharger Wastegate Solenoid A High
Monitor execution	Continuous
Monitor Sequence	None
Monitoring Duration	5 seconds

Wastegate Pneumatic Solenoid Valve Circuit malfunction thresholds:
PCM smart driver hardware detects faults for circuit short to battery, short to ground, and open circuit. Fault status reported to PCM to set appropriate DTC.

Vacuum Actuated Wastegate System

The 3.5L GTDI was introduced with a mechanical-pneumatic boost pressure controller as described in the previous section. Boost pressure is limited mechanically via a diaphragm and spring. Boost pressure can be increased within a limited range by controlling a wastegate pneumatic solenoid.

The 2.0L GTDI was introduced with a vacuum actuated wastegate. This permits control of the wastegate position at all engine conditions. The wastegate can be opened at some part load conditions to reduce the backpressure on the engine. This reduces pumping losses and improves efficiency and fuel economy. A vacuum sensor was added to improve the accuracy and robustness of the control system.

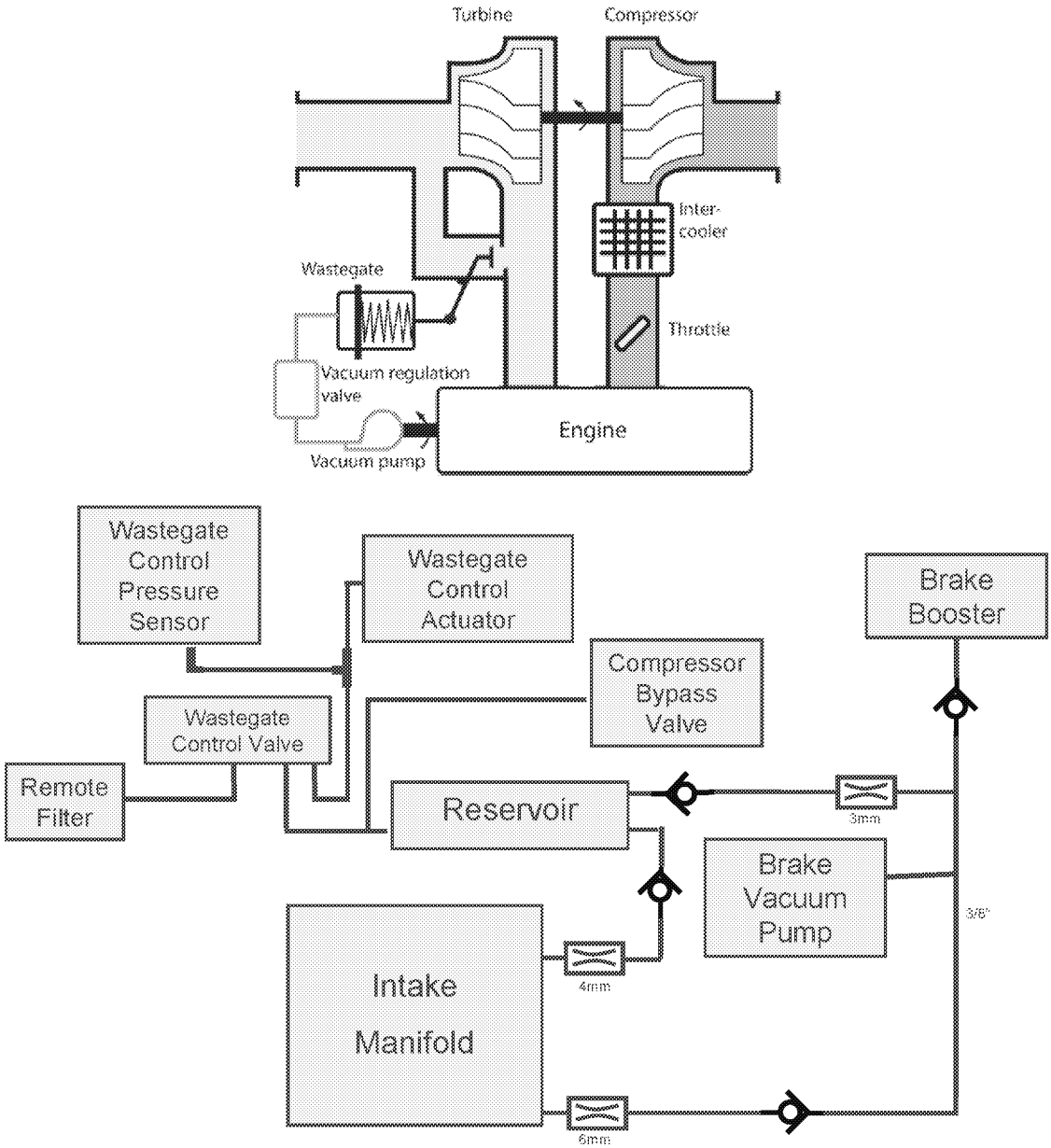

2.0LGTDI (EcoBoost) Vacuum Schematic for Wastegate Control System

ED_002078G_00001322-00173

Wastegate Pneumatic Solenoid Valve Circuit Check Operation	
DTCs	P0245 Turbocharger/Supercharger Wastegate Solenoid A Low P0246 Turbocharger/Supercharger Wastegate Solenoid A High
Monitor execution	Continuous
Monitor Sequence	None
Monitoring Duration	2 - 3 seconds

Wastegate Pneumatic Solenoid Valve Circuit malfunction thresholds:
PCM smart driver hardware detects faults for circuit short to battery, short to ground, and open circuit. Fault status reported to PCM to set appropriate DTC.

Under steady conditions, the control pressure error should be small. Control pressure lower than expected could indicate an air leak between wastegate canister and the wastegate solenoid, and insufficient source of vacuum, or that the wastegate solenoid is stuck off. Control pressure higher than expected could indicate that the wastegate solenoid is stuck on

Wastegate Control Pressure Check Operation	
DTCs	P1015 Wastegate Control Pressure Lower Than Expected P1016 Wastegate Control Pressure Lower Than Expected
Monitor execution	Continuous
Sensors OK	No P100F, P1011, P1012, P1013, P0245, P0246 DTCs
Monitor Sequence	None
Monitoring Duration	5 seconds

Wastegate Control Pressure Check Entry Conditions		
Entry Condition	Minimum	Maximum
Desired wastegate control pressure is stable: (desired pressure - expected pressure).		0.5 in Hg

Wastegate Pneumatic Solenoid Valve Circuit malfunction thresholds:
P1015 - Wastegate control pressure error > 3 in Hg P1016 - Wastegate control pressure error > 5 in Hg

Wastegate Control Pressure Sensor

The wastegate control pressure sensor is checked for opens, short and intermittents, P1012, P1013 and P1014.

Wastegate Control Pressure Sensor Check Operation	
DTCs	P1012 Wastegate Control Pressure Sensor Circuit Low P1013 Wastegate Control Pressure Sensor Circuit High P1014 Wastegate Control Pressure Sensor Circuit Intermittent/Erratic
Monitor execution	Continuous
Monitor Sequence	None
Monitoring Duration	5 seconds

Wastegate Control Pressure Sensor Transfer Function		
Vout=(Vref / 5) * (0.04399 * Pressure (in kPa) - 0.140)		
Volts	Pressure, kPa	Pressure, Inches Hg
0.3	10.0	2.95
0.4	12.3	3.62
1.0	25.9	7.65
2.0	48.6	14.36
3.0	71.4	21.07
4.5	105.5	31.14
4.8	112.8	33.31

Wastegate Control Pressure Sensor Check Entry Conditions		
Entry Condition	Minimum	Maximum
none		

Wastegate Pneumatic Solenoid Valve Circuit malfunction thresholds:
P1012 – voltage < 0.20 V
P1013 – voltage > 4.93 V
P1014 – open or shorted > 10 events in a driving cycle

The wastegate control pressure sensor reading is checked at key-up using a four-way correlation check. If the wastegate control pressure sensor reading is higher or lower than the readings of the BARO, MAP, and TIP, a P100F is set. .A P1011 is set if the wastegate control pressure is greater than BARO.

Wastegate Control Pressure Sensor Check Operation	
DTCs	P1011 Wastegate Control Pressure Sensor Circuit Range/Performance P100F Wastegate Control Pressure/BARO Correlation
Monitor execution	Continuous
Monitor Sequence	None
Sensors OK	No P1012, P1013, P1011, P2228, P2229, P2227, P0236, P0106 DTCs.
Monitoring Duration	5 seconds

Wastegate Control Pressure Sensor Check Entry Conditions		
Entry Condition	Minimum	Maximum
Engine off time (P100F only)	20 sec	

Wastegate Pneumatic Solenoid Valve Circuit malfunction thresholds:
P100F – pressure error exceeds 2.5 in Hg P1011 – pressure exceeds BARO by > 3.0 in Hg

Boost Control

The boost control system determines a desired boost. Active control occurs when the desired boost is above base boost where base boost is defined as that boost that results when the wastegate vent solenoid is not venting (circuit off).

The following conditions may result in underboost.

- One or more wastegates stuck open
- Large conduit leak between compressor and throttle

The following conditions may result in overboost.

- One or more wastegates stuck closed
- One or more control hoses leaking/disconnected between wastegate diaphragm and wastegate vent solenoid.
- Wastegate vent solenoid stuck in vent position
- Control hoses to wastegate vent solenoid swapped.
- Hose between boost volume and wastegate vent solenoid disconnected.
- Not-yet-detected Turbocharger Boost sensor in-range failure.

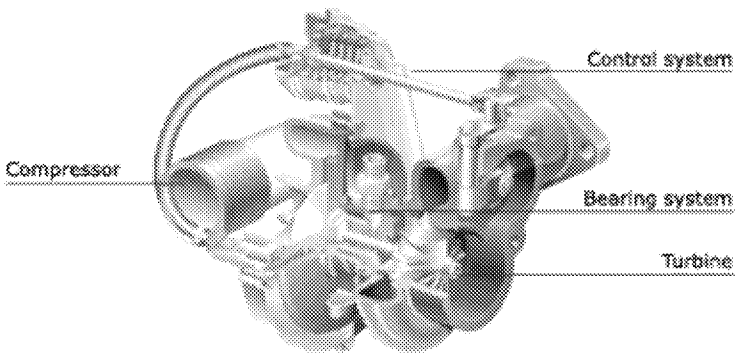

The boost control system computes a desired boost based on operating conditions. Via the wastegate pneumatic solenoid valve, it varies the boost pressure limit to achieve its desired boost level (measured by the TCB-A sensor). The air charge control regulates the throttle to control the intake manifold pressure (MAP).

OverBoost Control Functional Check Operation:	
DTCs	P0234 (Turbocharger/Supercharger A Overboost Condition)
Monitor execution	continuous
Monitor Sequence	none
Sensors/Actuators OK	CBV, TCB-A, WGS, BARO
Monitoring Duration	5 seconds (up/down timer)

OverBoost Control Functional Check Entry Conditions:		
Entry Condition	Minimum	Maximum
Wastegate Duty Cycle		0.05

OverBoost Control Functional Check Malfunction Thresholds:
(Boost Pressure Desired – Boost Pressure Actual) > 4 psi

UnderBoost Control Functional Check Operation:	
DTCs	P0299 (Turbocharger/Supercharger A Underboost Condition)
Monitor execution	continuous
Monitor Sequence	none
Sensors/Actuators OK	CBV, TCB-A, WGS, BARO
Monitoring Duration	5 seconds (up/down timer)

OverBoost Control Functional Check Entry Conditions:		
Entry Condition	Minimum	Maximum
Wastegate Duty Cycle	0.95	

OverBoost Control Functional Check Malfunction Thresholds:
–(Boost Pressure Desired – Boost Pressure Actual) > 4 psi

ED_002078G_00001322-00178

Fuel Injectors, Gasoline Direct Injection

Overview

The Gasoline Direct Injection (GDI) system is similar to a Port Fuel Injection (PFI) system with the exception of an added high-pressure pump.

- An in-tank pump supplies 65 psi fuel to the high pressure, camshaft-driven pump.
- The PCM-controlled pump produces a selectable pressure in the fuel rail(s).
- On/off injectors meter the high pressure fuel directly into the cylinders.

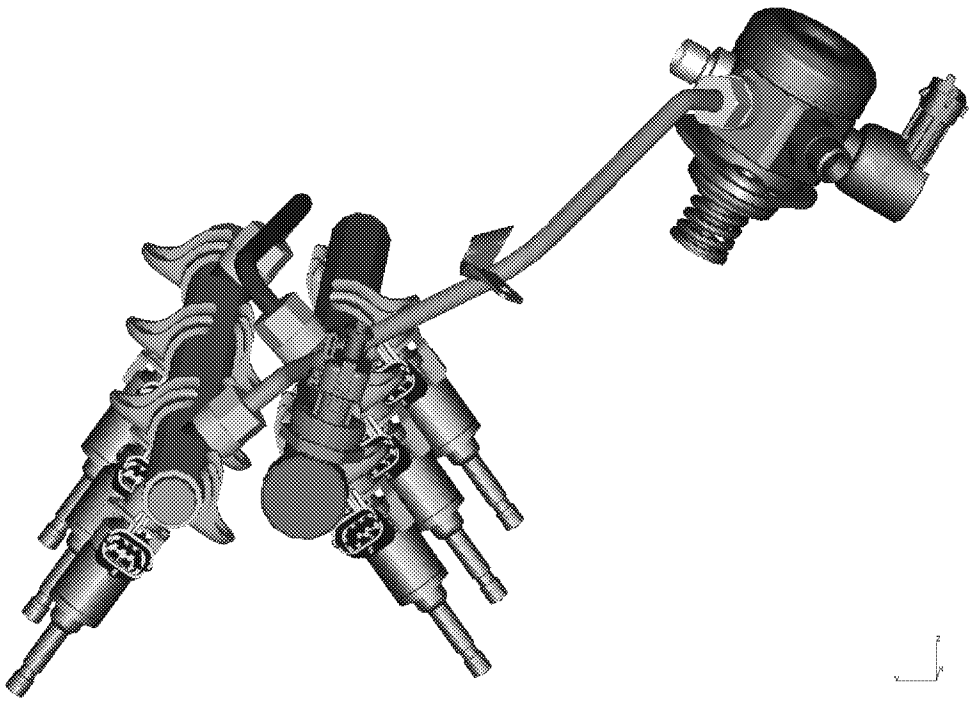

GDI Fuel Injectors, Rail, and High Pressure Pump

Gasoline Direct Injection (GDI) injectors spray liquid fuel, under high pressure, directly in the cylinder when activated. The high pressure fuel is supplied to the injector by a common fuel rail. The desired fuel pressure is determined by the PCM. Fuel injector pulsewidth is based on actual fuel pressure which is measured by a pressure sensor in the common rail.

Injection typically occurs in the cylinder's intake and compression stroke. Under certain conditions, multiple injections can occur per cylinder event. Since injection pressure is variable, the fuel mass injected is a function of both fuel pressure and injector pulsewidth.

A typical PFI injector is activated by applying battery voltage to it. The GDI injector driver applies a high voltage (65 volts) to initially open the injector and then controls injector current to hold it open during injection.

Fuel Injectors

A typical PFI injector is single side controlled by the PCM. The GDI injector has two wires per injector routed to the PCM. The injector high side goes to a PCM pin (or two pins) that are common between an injector pair. The PCM contains a smart driver that monitors and compares high side and low side injector currents to diagnose numerous faults. All injector fault modes, however, are mapped into a single DTC per injector.

A higher-than-battery-voltage supply (internally generated within the PCM) is used to open the injector and modulated battery voltage holds the injector open. The injector driver IC controls three transistor switches that apply the boost voltage and then modulate injector current. Should that full voltage be unavailable, the proper injector opening current may not be generated in the time required. This fault (P062D) is detected on a per cylinder basis and reported without specifying a particular cylinder.

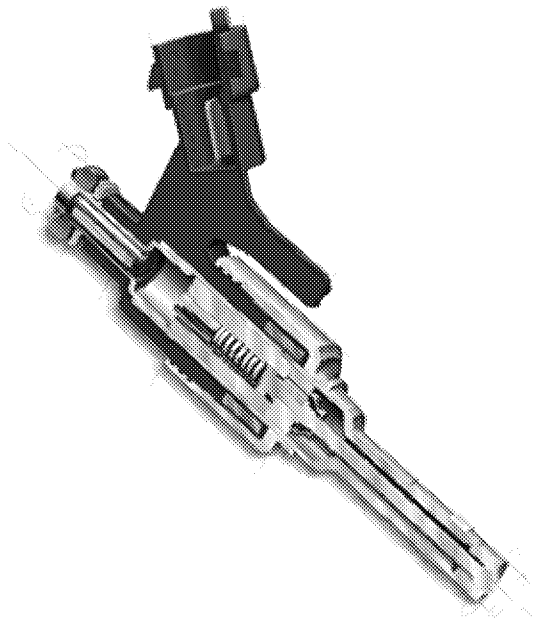

GDI Fuel Injector

Injector Circuit Check Operation	
DTCs	P0201 through P0206 (Cylinder x Injector Circuit) P062D Fuel Injector Driver Circuit Performance
Monitor execution	Continuous within entry conditions
Monitor Sequence	None
Monitoring Duration	10 seconds

Typical Injector Circuit Check Entry Conditions		
Entry Condition	Minimum	Maximum
Battery Voltage	11.0 volts	

Fuel Volume Regulator

The high pressure fuel pump raises Fuel Rail Pressure (FRP) to the desired level to support fuel injection requirements. Unlike Port Fuel Injection (PFI) systems, with Gasoline Direct Injection (GDI), the desired fuel rail pressure ranges widely over operating conditions.

The Fuel Volume Regulator is controlled to allow a desired fraction of the pump's full displacement (fuel volume) into the fuel rail. A fuel rail pressure control algorithm computes the required fraction of fuel pump volume to achieve the desired pressure. The high pressure fuel pump can only increase (and not reduce) fuel rail pressure. Fuel Injection is used to reduce fuel rail pressure.

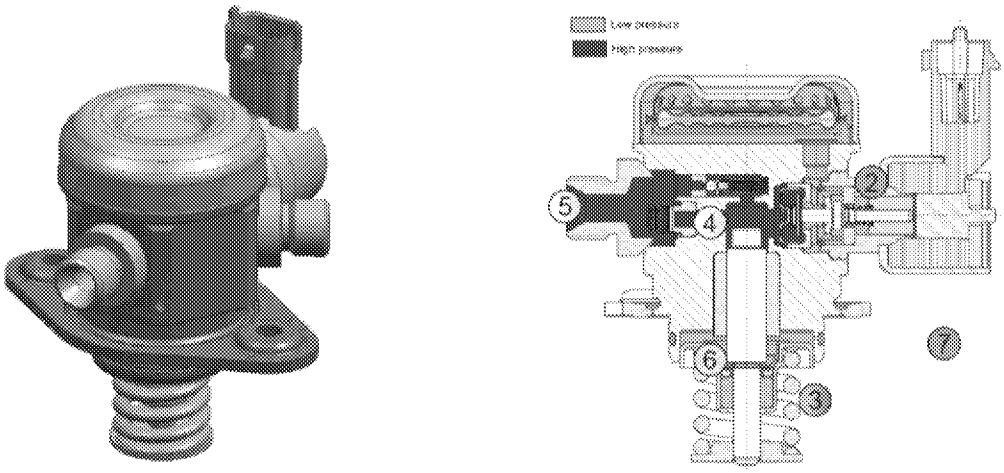

High Pressure Fuel Pump and Cutaway view

The Fuel Volume Regulator (FVR) is a solenoid valve permanently mounted to the pump assembly. It selects one of two plumbing elements upstream of the pump chamber. The next figure shows the solenoid valve in the un-powered position.)

Solenoid State	Plumbing Element Selected
Un-powered	Flow Through (i.e. Check Valve Disabled)
Energized	Check Valve

The FVR control is done synchronous to the cam position on which the pump is mounted. The synchronous FVR control must take into account that the camshaft phasing is varied during engine operation for purposes of valve control.

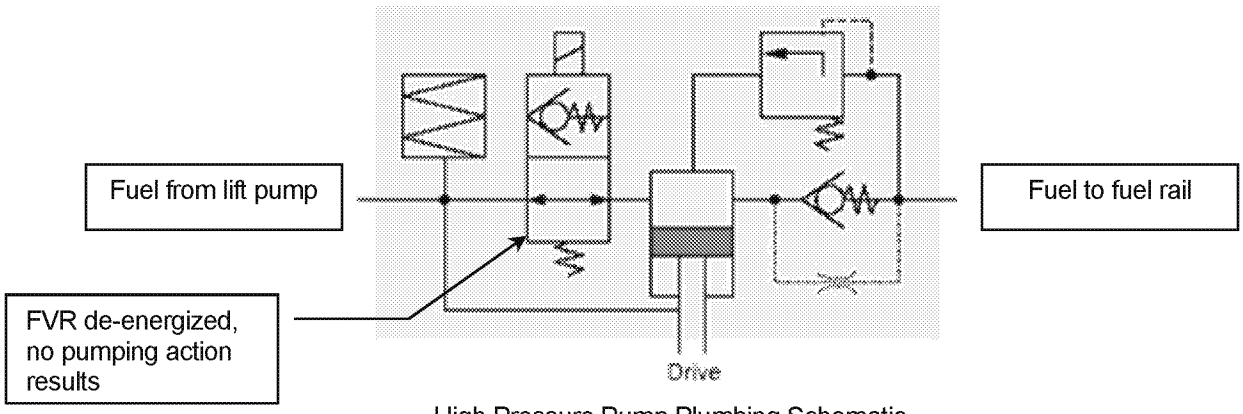

High Pressure Pump Plumbing Schematic

ED_002078G_00001322-00181

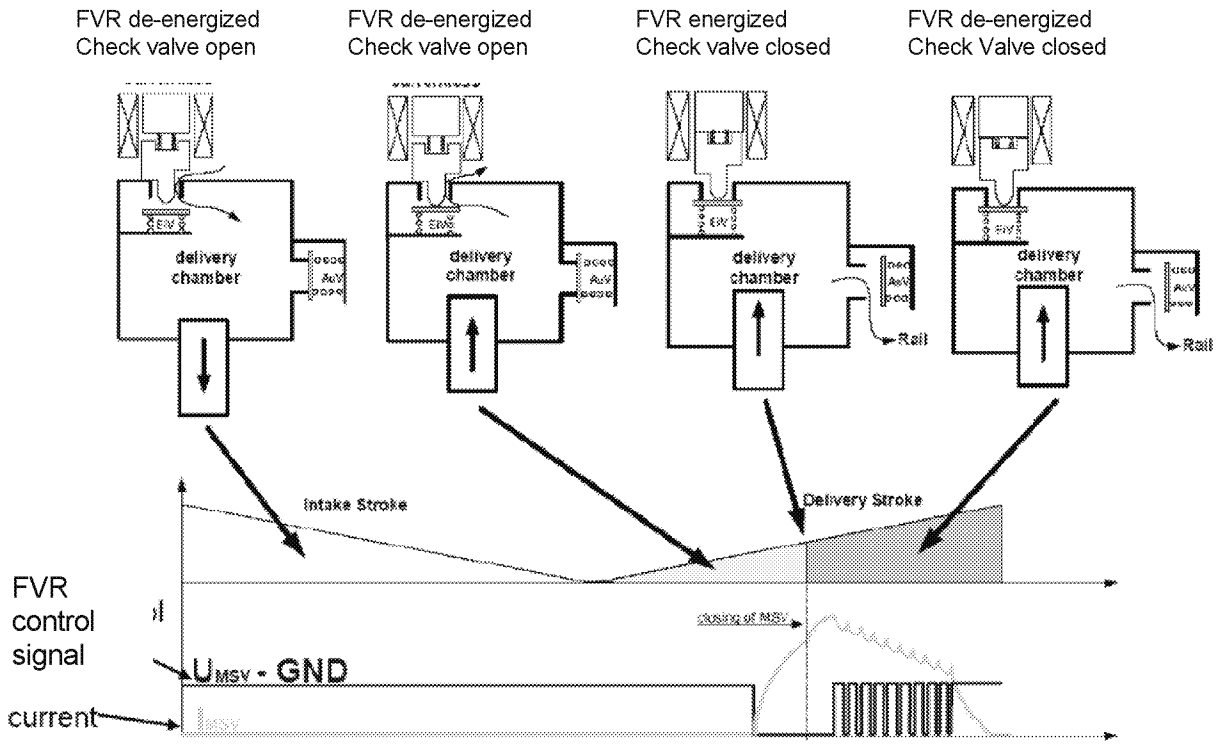

Fuel Volume Regulator Control

The FVR solenoid coil may overheat and fail if constant battery voltage is applied. For that reason, the PCM is equipped with protections to prevent FVR damage due certain wiring faults.

The FVR is a two wire device (high and low side control) with both wires routed to the PCM. This means that either or both wires can generate the DTC(s).

Fuel Volume Regulator Circuit Check Operation	
DTCs	P0001 Fuel Volume Regulator Control Circuit / Open P0003 Fuel Volume Regulator Control Circuit Low P0004 Fuel Volume Regulator Control Circuit High
Monitor execution	continuous
Monitor Sequence	none
Sensors OK	none
Monitoring Duration	not applicable

Fuel Rail Pressure Sensor

The fuel rail pressure control system uses the measured fuel rail pressure in a feedback control loop to achieve the desired fuel rail pressure. The fuel injection algorithm uses actual fuel rail pressure in its computation of fuel injector pulse width and fuel injection timing.

The Fuel Rail Pressure sensor is a gauge sensor. Its atmospheric reference hole is in the electrical connector. The fuel rail pressure sensor has a nominal range of 0 to 26 MPa (0 to 260 bar, 0 to 3770 psi). This pressure range is above the maximum intended operating pressure of 15 MPa and above the pressure relief valve setting of 19.4 MPa. The sensor voltage saturates at slightly above 0.2 and slightly below 4.8 volts.

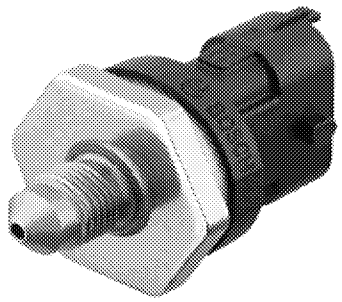

Fuel Rail Pressure Sensor

Fuel rail pressure can develop a vacuum when the vehicle cools after running. Vacuums can be measured by the FPR gauge sensor as voltages near the 0.2 Volt limit.

FRP Sensor Transfer Function		
FRP = −471.37 psi + (FRP_voltage / 5.0 volts) * 4713.73 psi		
Volts	**Pressure, MPa (gauge)**	**Pressure, psi (gauge)**
4.80	27.95	4054
4.50	26	3771
3.50	19.5	2828
2.50	13.0	1885
1.50	6.5	943
0.50	0	0
0.20	-1.95	-283

ED_002078G_00001322-00183

FRP Open/Short Check Operation:	
DTCs	P0192 - Fuel Rail Pressure Sensor A Circuit Low P0193 - Fuel Rail Pressure Sensor A Circuit High
Monitor execution	Continuous
Monitor Sequence	none
Sensors OK	none
Monitoring Duration	5 seconds to register a malfunction

Typical FRP Sensor Check Malfunction Thresholds:
FRP voltage < 0.20 volts or FRP voltage > 4.80 volts

A fuel pressure sensor that is substantially in error results in a fuel system fault (too rich / too lean). If actual fuel rail pressure exceeds measured pressure, more fuel than that which would be expected is injected and vice versa. This fuel error would show up in the long term and short term fuel trim.

ED_002078G_00001322-00184

Fuel Rail Pressure Control

Fuel rail pressure is maintained via:

- Feed-forward knowledge of pump command and injector fuel quantity and
- Feedback knowledge of sensed pressure.

A set point pressure is determined by engine operating conditions. If a pressure increase is desired, the fuel pump effective stroke is increased via FVR valve timing. Pressure decreases are analogous; however, without injection fuel rail pressure cannot be decreased. Acting alone, the pump can only increase pressure.

In theory, the PCM could exactly account for mass entering the rail via the pump and exiting the rail via the injectors, however, since both the pump timing and injector timing are constantly changing and interact, this is very difficult. Thus, the pump control performs fuel pressure control as a continuous process. It calculates average fuel mass over 720° (one engine cycle) and average fuel pressure over 240°. Control is executed at engine firing rate 240°.

For diagnostic purposes, fuel fractional pressure error is computed as a ratio of the pressure error over the desired pressure. This unitless ratio is then compared to thresholds to yield fuel pressure too low (P0087) or fuel pressure too high (P0088).

Fuel Rail Pressure Control (Normal) Functional Check Operation:	
DTCs	P0087 (Fuel Rail Pressure Too Low) P0088 (Fuel Rail Pressure Too High)
Monitor execution	continuous
Monitor Sequence	P0087 and P0088 must complete before setting P00C6 or P053F
Sensors/Actuators OK	FLI, FRP, FVR,, Lift Pump
Monitoring Duration	not applicable

Typical Fuel Rail Pressure Control (Normal) Functional Check Entry Conditions:		
Entry Condition	Minimum	Maximum
High Pressure Pump Enabled	Enabled	
Fuel level	15%	
Injector Cut Off	No Injector Cut Off	
Injection Volume / (720° Pump Volume / Number of Cylinders)	0.05	0.90
Engine Coolant Temperature	20°F	250°F
CSER Mode	Not in CSER	

ED_002078G_00001322-00185

Typical Fuel Rail Pressure Control (Normal) Functional Check Malfunction Thresholds:
P0087: (Fuel_Pressure_Desired – Fuel_Pressure_Actual) / Fuel_Pressure_Desired > 0.25
P0088: – (Fuel_Pressure_Desired – Fuel_Pressure_Actual) / Fuel_Pressure_Desired > 0.25

Fuel Rail Pressure Control (Cranking)

The engine is designed to start with a minimum required fuel injection pressure. If that minimum fuel injection pressure is not achived before the first fuel injection, a fault is set.

Fuel Rail Pressure Control (Cranking) Functional Check Operation:	
DTCs	P00C6 (Fuel Rail Pressure Too Low – Engine Cranking)
Monitor execution	Minimum pressure met instantaneously once during cranking
Monitor Sequence	P0087 and P0088 must pass before setting P00C6 or P053F
Sensors/Actuators OK	FLI, FRP, FVR,, Lift Pump
Monitoring Duration	Minimum met instantaneously once during cranking

Typical Fuel Rail Pressure Control (Cranking) Functional Check Entry Conditions:		
Entry Condition	Minimum	Maximum
Fuel level	15%	

Typical Fuel Rail Pressure Control (Cranking) Functional Check Malfunction Thresholds:
Fuel_Pressure_Actual >= Fuel_Pressure_Desired

ED_002078G_00001322-00186

Fuel Rail Pressure Control (CSER)

While not used in this first GTDI application, it is possible that during catalyst heating (CSSER) the fuel injection timing may be unique to this mode. In future cases, a two squirt injection may be used. One of those injection squirts would occur during the compression stroke. Compression injection is only allowed within a calibrated fuel pressure "window". The P053F detection monitors the time fraction within that fuel pressure window.

Fuel Rail Pressure Control (CSER) Functional Check Operation:	
DTCs	P053F (Cold Start Fuel Pressure Control Performance)
Monitor execution	During CSER
Monitor Sequence	P0087 and P0088 must pass before setting P00C6 or P053F
Sensors/Actuators OK	FLI, FRP, FVR, ~~VCT system~~, Lift Pump
Monitoring Duration	Entire CSER period

Typical Fuel Rail Pressure Control (CSER) Functional Check Entry Conditions:		
Entry Condition	Minimum	Maximum
Fuel level	15%	

Typical Fuel Rail Pressure Control (CSER) Functional Check Malfunction Thresholds:
Time in Fuel Injection Pressure Window / CSER Duration > 0.70
Fuel Injection Pressure Window defined as follows:
Minimum Fuel Pressure to Support Desired Injection Mode <= Fuel Pressure Actual
Fuel Pressure Actual <= Maximum Fuel Pressure to Support Desired Injection Mode

Electronic Throttle Control

The Electronic Throttle Control (ETC) system uses a strategy that delivers engine shaft torque, based on driver demand, utilizing an electronically controlled throttle body. ETC strategy was developed mainly to improve fuel economy. This is possible by decoupling throttle angle (produces engine torque) from pedal position (driver demand). This allows the powertrain control strategy to optimize fuel control and transmission shift schedules while delivering the requested engine or wheel torque.

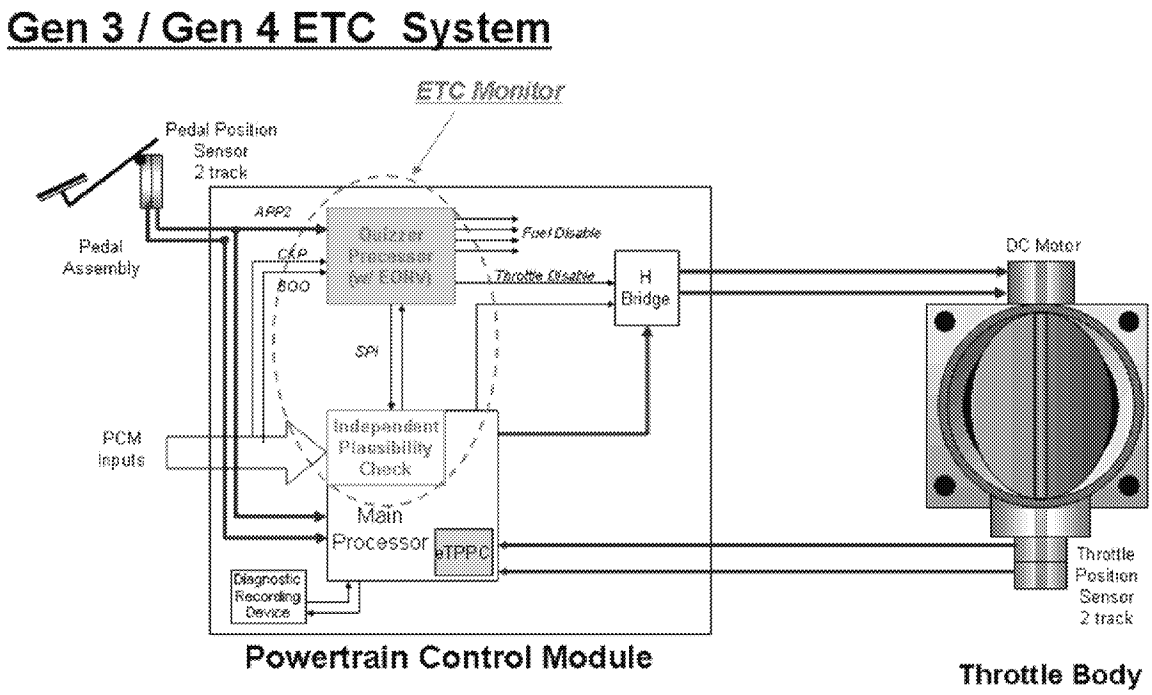

Because safety is a major concern with ETC systems, a complex safety monitor strategy (hardware and software) was developed. The monitor system is distributed across two processors: the main powertrain control processor and a monitoring processor called a Quizzer processor.

The primary monitoring function is performed by the Independent Plausibility Check (IPC) software, which resides on the main processor. It is responsible for determining the driver-demanded torque and comparing it to an estimate of the actual torque delivered. If the generated torque exceeds driver demand by specified amount, the IPC takes appropriate mitigating action.

Since the IPC and main controls share the same processor, they are subject to a number of potential, common-failure modes. Therefore, the Quizzer processor was added to redundantly monitor selected PCM inputs and to act as an intelligent watchdog and monitor the performance of the IPC and the main processor. If it determines that the IPC function is impaired in any way, it takes appropriate Failure Mode and Effects Management (FMEM) actions.

ETC System Failure Mode and Effects Management:	
Effect	Failure Mode
No Effect on Drivability	A loss of redundancy or loss of a non-critical input could result in a fault that does not affect drivability. The Wrench light will turn on, but the throttle control and torque control systems will function normally.
RPM Guard w/ Pedal Follower	In this mode, torque control is disabled due to the loss of a critical sensor or PCM fault. The throttle is controlled in pedal-follower mode as a function of the pedal position sensor input only. A maximum allowed RPM is determined based on pedal position (RPM Guard.) If the actual RPM exceeds this limit, spark and fuel are used to bring the RPM below the limit. The wrench light and the MIL are turned on in this mode and an ETC component causal code is set. EGR, VCT, and IMRC outputs are set to default values.
RPM Guard w/ Default Throttle	In this mode, the throttle plate control is disabled due to the loss of Throttle Position, the Throttle Plate Position Controller, or other major ETC system fault. A default command is sent to the (e)TPPC, or the H-bridge is disabled. Depending on the fault detected, the throttle plate is controlled or springs to the default (limp home) position. A maximum allowed RPM is determined based on pedal position (RPM Guard.) If the actual RPM exceeds this limit, spark and fuel are used to bring the RPM below the limit. The wrench light and the MIL are turned on in this mode and an ETC component causal code is set. EGR, VCT, and IMRC outputs are set to default values.
SLOWE / BOA	This mode is caused by the loss of 1 or 2 pedal position sensor inputs due to sensor, wiring, or PCM faults. For a single sensor fault, driver demand is rate limited based on input from the remaining good sensor. For a dual sensor fault, driver demand is ramped to a fixed pedal position (high idle RPM) and there is no response to the driver input. If the brake pedal is applied for either a single or dual sensor fault, the engine returns to a normal idle RPM. The wrench light is turned on in this mode, and an accelerator pedal sensor causal code is set.
PCM Reset (Bosch CY320 or Conti ATIC Quizzer hardware only)	If a significant processor fault is detected, the monitor will attempt to mitigate the fault by forcing a PCM reset. If the fault clears after the reset, then the vehicle will continue running. If the fault persists, then the monitor will force another reset. This will continue until the fault clears or until the PCM exceeds the maximum number of resets allowed. If this occurs, the PCM is held in reset, and the engine does not run. The maximum number of resets allowed depends on the PCM supplier and the type of fault detected. The wrench light and MIL are turned on in this mode, and the appropriate processor P-code will set.
	Note: The wrench light illuminates or an ETC message is displayed on the message center immediately. The MIL illuminates after 2 driving cycles.

Accelerator, Brake and Throttle Position Sensor Inputs

On-demand KOEO / KOER Sensor Check Operation:	
DTCs	P1124 – TP A out of self-test range (non-MIL) P1575 – APP out of self-test range (non-MIL) P1703 – Brake switch out of self-test range (non-MIL)
Monitor execution	On-demand
Monitor Sequence	None
Sensors OK	not applicable
Monitoring Duration	< 1 seconds to register a malfunction

ED_002078G_00001322-00189

Accelerator Pedal Position Sensor Check Operation:	
DTCs	P2122, P2123 – APP D circuit continuity (wrench light, non-MIL) P2127, P2128 – APP E circuit continuity (wrench light, non-MIL) P2138 – APP D/E circuit disagreement (wrench light, non-MIL)
Monitor execution	continuous
Monitor Sequence	none
Sensors OK	not applicable
Monitoring Duration	< 1 seconds to register a malfunction

APP sensor check malfunction thresholds:
Circuit continuity - Voltage < 0.25 volts or voltage > 4.75 volts
Range/performance – disagreement between sensors > 0.9 degrees
For B-car architecture: Circuit continuity – Voltage < 0.6 volts or >11.4 volts for PWM input

Brake Switch Check Operation:	
DTCs	P0504 – Brake switch A/B correlation (wrench light, non-MIL) P0572 – Brake switch circuit low (wrench light, non-MIL) P0573 – Brake switch circuit high (wrench light, non-MIL)
Monitor execution	Continuous
Monitor Sequence	None
Sensors OK	not applicable
Monitoring Duration	> 25 brake application cycles to register a malfunction

Throttle Position Sensor Check Operation:	
DTCs	P0122, P0123 – TP A circuit continuity (MIL, wrench light) P0222, P0223 – TP B circuit continuity (MIL, wrench light) P2135 – TP A / TP B correlation (non-MIL, wrench light)
Monitor execution	Continuous
Monitor Sequence	None
Sensors OK	not applicable
Monitoring Duration	< 1 seconds to register a malfunction

TP sensor check malfunction thresholds:
Circuit continuity - Voltage < 0.25 volts or voltage > 4.75 volts
Correlation and range/performance – disagreement between sensors > 7 degrees

Electronic Throttle Monitor

Electronic Throttle Monitor Operation:	
DTCs	U0300 – ETC software version mismatch, IPC, Quizzer or TPPC (MIL, wrench light) P0600 – Serial Communication Link (MIL, wrench light) P060A – Internal control module monitoring processor performance (MIL, wrench light) P060B – Internal control module A/D processing performance (MIL, wrench light) P060C – Internal control module main processor performance (MIL, wrench light) P060D – Internal control module accelerator pedal performance (non-MIL, wrench) P061A – Internal control module torque performance (non-MIL, wrench light for cruise fault, no wrench light for torque clipping) P061B – Internal control module torque calculation performance (MIL, wrench light) P061C – Internal control module engine rpm performance (MIL, wrench light) P061D – Internal control module engine air mass performance (MIL, wrench light) P061E – Internal control module brake signal performance (non-MIL, wrench light) P062B – Internal control module fuel injector control performance (MIL for Conti PCM only) P062C – Internal control module vehicle speed performance (non-MIL, wrench light) P164C – Internal control module stop/start performance (non-MIL, wrench light) P1674 – Internal control module software corrupted (MIL, wrench light P26C4 – Internal control module clutch pedal performance (non-MIL) U1013 – Transmission control module secure net error (non-MIL)
Monitor execution	Continuous
Monitor Sequence	None
Sensors OK	not applicable
Monitoring Duration	< 1 seconds to register a malfunction

Throttle Plate Position Controller (TPPC) Outputs

The purpose of the TPPC is to control the throttle position to the desired throttle angle. The current ETC systems have the eTPPC function integrated in the main PCM processor.

The desired angle is relative to the hard-stop angle. The hard-stop angle is learned during each key-up process before the main CPU requests the throttle plate to be closed against the hard-stop. The output of the (e)TPPC is a voltage request to the H-driver (also in PCM). The H driver is capable of positive or negative voltage to the Electronic Throttle Body Motor.

Throttle Plate Controller and Actuator Operation:	
DTCs	P2107 – processor test (MIL, wrench light) P2111 – throttle actuator system stuck open (MIL, wrench light) P2112 – throttle actuator system stuck closed (MIL, wrench light) P2101 – throttle actuator range/performance test (MIL, wrench light) P115E – throttle actuator airflow trim at max limit (non-MIL)
Monitor execution	Continuous
Monitor Sequence	None
Monitoring Duration	< 5 seconds to register a malfunction

ED_002078G_00001322-00192

Stop Start Overview

The 2013 MY Fusion will incorporate Stop Start. Stop-Start will automatically turn off the engine when the vehicle is stopped, such as at traffic lights, to avoid fuel waste due to unnecessary engine idle. Upon brake pedal release, the engine will automatically restart offering normal vehicle response. The vehicle may not turn off the engine when stopped depending on customer comfort settings or vehicle conditions.

The benefits are improved fuel economy and reduced exhaust emissions. Stop Start affects many components and subsystems in the vehicle as shown in the diagram below.

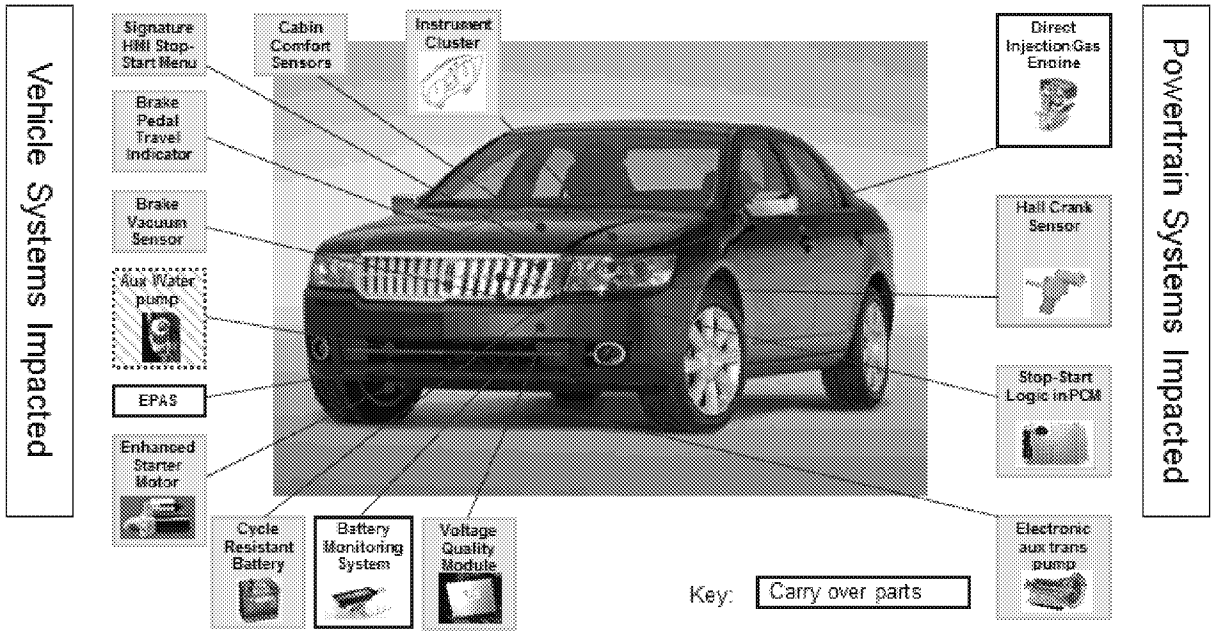

Stop Start Diagnostics

Existing diagnostics for the thermostat monitor had to be revised to accommodate stop-start. The ECT model used for the thermostat had to be revised to accommodate engine pull downs.

Diagnostics were added for new/improved hardware:

- Bi-directional crankshaft sensor
- Electric transmission fluid pump
- Auxiliary water pump
- Voltage quality module
- Brake vacuum sensor
- Stop-Start button
- Battery Monitor System
- Brake Switch

ED_002078G_00001322-00193

Stop Start Enable Conditions:

Stop Start is enabled during a normal driving cycle based on the entry conditions listed in the table below:

Input	Stop-Start Inhibit Conditions	Rationale
ECT	140 deg F < ECT > 230 deg F	Combustion Stability
BARO	BARO <= 20 in Hg (Altitude <= 10,000 ft)	Minimum Air Charge
FRP at Idle	Fuel Rail Pressure (FRP) at Idle >= 45 Bar	Restart Combustion Stability
FRP w/Engine Off	FRP at engine off >= FRP at Idle with max drop of 5 Bar. If FRP at eng off drops below threshold, request pull-up	Restart Combustion Stability
Time Since Key-Start	10 seconds	Oil Stabilization and Learn Closed Throttle
Max Crank Time	Max Crank Time should be min of 5 sec below limit to allow a shutdown	To avoid a possible max crank fault
Low Fuel Level	fuel level below 15%	Avoid starts on empty fuel tank
Purge complete	Canister Purge Valve no closed before end of pre stop period	Wait for purge to complete before pulling down engine
Adaptive Fuel Complete	Adaptive fuel learning not complete	If Adaptive fuel learning is in process, wait for it to complete before pull down

Stop Start Disable Conditions:

Stop-Start is inhibited if any of the following DTCs are set. This is intended to ensure that starting is not compromised.

FVR (P0001, P0003, P0004), **Low Pressure Fuel** (P008A, P008B), **Crank Fuel Pressure** (P00C6),

VVT (P0010, P0011, P0012, P0013, P0014, P0015, P0016, P0017),

AAT (P0072, P0073, P0074), **IAT** (P00CE), **High Pressure Fuel** (P0087, P0088),

IAT2 (P0096, P0097, P0098), **MAF** (P0100, P0102, P0103, P1101), **MAF/TP** (P0068),

MAP (P0106, P0107, P0108, P0109), **IAT1** (P0111, P0112, P0113, P0114),

ECT (P0116, P0117, P0118, P0119), **TP1** (P0122, P0123), **TP2** (P0222, P0223),

Fuel Monitor (P0148, P0171, P0172), **LP FP** (P018C, P018D), **FRP** (P0192, P0193),

Injectors (P0201, P0202, P0203, P0204), **Misfire** (P0300, P0301, P0302, P0303, P0304),

Fuel Pump (P025A, P025B, P0230, P0231, P0232, P0627, P064A),

CMP A (P0340, P0341, P0344), **Coils** (P0351, P0352, P0353, P0354),

CMP B (P0365, P0366, P0369), **Idle Speed** (P0505, P0506, P0507), **Starter** (P0615, P06E9, P162F),

ETC (P2100, P2101, P2107, P2111, P2112), **APP** (P2122, P2123, P2127, P2128, P2135, P2138),

BARO (P2227, P2228, P2229, P2230), **PCV** (P2282),

Coils (P2300, P2301, P2303, P2304, P2306, P2307, P2309, P2310)

Stop Start Customer Interface

The 2013 MY Fusion will incorporate Stop Start. Start/stop is enabled for every start as the default condition. It cannot be permanently disabled.

Auto Start/stop can be disabled (and re-enabled) by pressing the button on the console, which lights up with the word OFF next to the auto start/stop symbol. This is very similar to how other features, like traction control or back-up warning works.

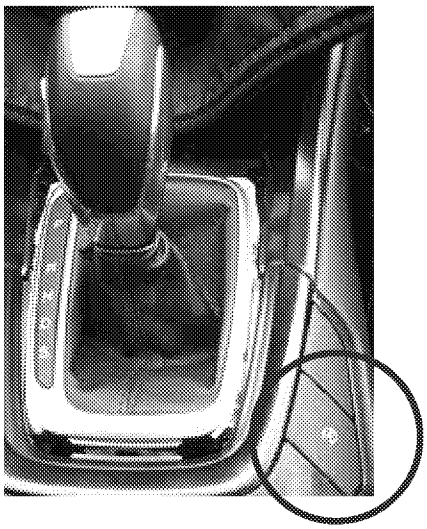

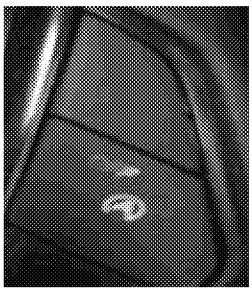

If you have the message center displaying the auto start/stop feature messages, it will tell you when you come to a stop that auto start/stop is disabled by the driver.

Stop Start Button

The stop-start disable button is a momentary contact switch. It is normally open, CAN signal low. Closed (button being pushed) is CAN signal high. The Front Controls Interface Module reads the switch status and sends it over CAN to the PCM.

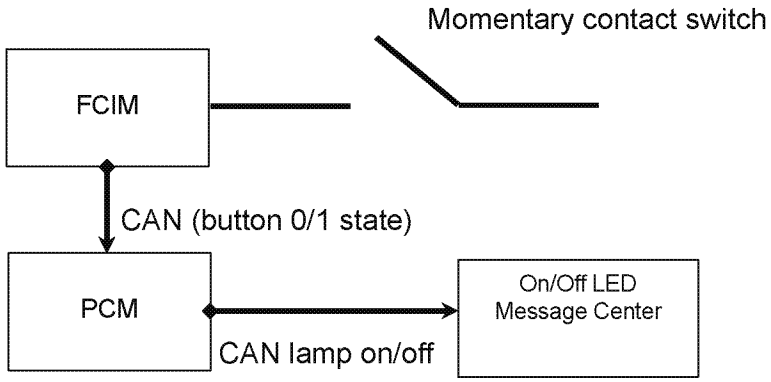

The PCM looks for a low to high transition to toggle the status of Stop-start from enabled (default state) to disabled. If there is another low to high transition, stop-start will go from disabled to enabled.

If the PCM stops receiving data from the FCIM, the PCM sets a U0256 - Lost Communication with Front Controls Interface Module "A".

If the FCIM detects that the switch is shorted to ground, it sets a B12CB -11 Start/Stop "Eco-Start" Enable Button Circuit Short To Ground. DTC sets if the button is pushed for 4 continuous seconds (8 samples) but will clear it if the fault is not detected any time after that for 500 msec

If the FCIM detects that the status indicator is shorted to ground, it sets a B12CA-11 - Start/Stop "Eco-Start" Status Indicator Circuit Short To Ground

If the FCIM detects that the status indicator is shorted to battery or open, it sets a B12CA-15 -Start/Stop "Eco-Start" Status Indicator Circuit Short To Battery or Open

If the button is stuck open, there are no low to high transitions. Since the PCM does not recognize a button push, stop-start will not be disabled if requested by the customer. All stop-start HMI will continue indicating that stop-start is enabled (e.g. Tell-Tale and IOD).

If the button is stuck closed, there are no low to high transitions. Since the PCM does not recognize a button push, stop-start will not be disabled if requested by the customer. All stop-start HMI will indicate that stop-start is enabled (e.g. Tell-Tale and IOD).

Comprehensive Component Monitor - Engine

Engine Temperature Sensor Inputs

Analog inputs such as Intake Air Temperature (P0112, P0113), Engine Coolant Temperature (P0117, P0118), Cylinder Head Temperature (P1289. P1290), Mass Air Flow (P0102, P0103) and Throttle Position (P0122, P0123, P1120), Fuel Temperature (P0182, P0183), Engine Oil Temperature (P0197, P0198), Fuel Rail Pressure (p0192, P0193) are checked for opens, shorts, or rationality by monitoring the analog -to-digital (A/D) input voltage.

Engine Coolant Temperature Sensor Check Operation:	
DTCs	P0117 (low input), P0118 (high input)
Monitor execution	continuous
Monitor Sequence	None
Sensors OK	not applicable
Monitoring Duration	5 seconds to register a malfunction

Typical ECT sensor check malfunction thresholds:
Voltage < 0.244 volts or voltage > 4.96 volts

The ECT rationality test checks to make sure that ECT is not stuck in a range that causes other OBD to be disabled. If after a long (6 hour) soak, ECT is very high (> 230 °F) and is also much higher than IAT at start, it is assumed that ECT is stuck high. If after a long (6 hour) soak, ECT is stuck midrange between 175 °F (typical thermostat monitor threshold temperature) and 230 °F, it is assumed that ECT is stuck mid range.

ECT Sensor Rationality Check Operation:	
DTCs	P0116 (ECT stuck high or midrange)
Monitor execution	Once per driving cycle
Monitor Sequence	None
Sensors OK	ECT, CHT, IAT
Monitoring Duration for stuck high	On first valid sample after key on (engine does not have to start)
Monitoring Duration for stuck midrange	5 seconds to register a malfunction

Typical ECT Sensor Rationality check entry conditions:		
Entry Condition	Minimum	Maximum
Engine-off time (soak time)	360 min	
Difference between ECT and IAT (stuck high only)		50 deg
Engine Coolant Temperature for stuck high condition	230 °F	
Engine Coolant Temperature for stuck midrange condition	175 °F	230 °F

Typical ECT Sensor Rationality check malfunction thresholds:
ECT stuck high after first valid sample OR ECT stuck midrange for > 5 seconds

Currently, vehicles use either an ECT sensor or CHT sensor, not both. The CHT sensor measures cylinder head metal temperature as opposed to engine coolant temperature. At lower temperatures, CHT temperature is equivalent to ECT temperature. At higher temperatures, ECT reaches a maximum temperature (dictated by coolant composition and pressure) whereas CHT continues to indicate cylinder head metal temperature. If there is a loss of coolant or air in the cooling system, the CHT sensor will still provides an accurate measure of cylinder head metal temperature. If a vehicle uses a CHT sensor, the PCM software calculates both CHT and ECT values for use by the PCM control and OBD systems.

Cylinder Head Temperature Sensor Check Operation:	
DTCs	P1289 (high input), P1290 (low input), P1299 (fail-safe cooling activated)
Monitor execution	continuous
Monitor Sequence	none
Sensors OK	not applicable
Monitoring Duration	5 seconds to register a malfunction

Typical CHT sensor check malfunction thresholds:
Voltage < 0.244 volts or voltage > 4.96 volts
For P1299, MIL illuminates immediately if CHT > 270 °. Fuel shut-off is activated to reduce engine and coolant temperature

Beginning in the 2013 MY, an Exhaust Metal Temperature (EMT) sensor has been added to the 2.0L GTDI engine in some vehicles along with an ECT sensor. This EMT sensor is located in the cylinder head near the exhaust port. The signal correlates well to ECT during normal operating conditions with a properly filled and sealed coolant system. However, if the engine coolant system was damaged and coolant was low or lost, the EMT sensor will still sense the actual exhaust metal temperature while the ECT could be sitting in air instead of coolant (reading a much lower temperature). This sensor is used strictly for engine component protection via the PCM's "fail-safe" cooling algorithm with diagnostics for open and short circuit faults (P1289, P1290) along with the "fail-safe" cooling fault (P1299). This EMT sensor is actually a CHT sensor that only uses the high range resistor network, hence it uses the CHT "Hot End" transfer function shown below.

Cylinder Head Temperature Sensor Check Operation:	
DTCs	P1289 (high input), P1290 (low input), P1299 (fail-safe cooling activated)
Monitor execution	continuous
Monitor Sequence	none
Sensors OK	not applicable
Monitoring Duration	5 seconds to register a malfunction

Typical CHT sensor check malfunction thresholds:
Voltage < 0.244 volts or voltage > 4.96 volts
For P1299, MIL illuminates immediately if CHT > 270 °. Fuel shut-off is activated to reduce engine and coolant temperature

Intake Air Temperature Sensor Check Operation:	
DTCs	P0112 (low input), P0113 (high input)
Monitor execution	continuous
Monitor Sequence	none
Sensors OK	not applicable
Monitoring Duration	5 seconds to register a malfunction

Typical IAT sensor check malfunction thresholds:
Voltage < 0.244 volts or voltage > 4.96 volts

Engine Oil Temperature Sensor Check Operation:	
DTCs	P0197 (low input), P0198 (high input)
Monitor execution	continuous
Monitor Sequence	none
Sensors OK	not applicable
Monitoring Duration	5 seconds to register a malfunction

Typical EOT sensor check malfunction thresholds:
Voltage < 0.20 volts or voltage > 4.96 volts

ECT, IAT, EOT Temperature Sensor Transfer Function		
Volts	A/D counts in PCM	Temperature, degrees F
4.89	1001	-40
4.86	994	-31
4.81	983	-22
4.74	970	-13
4.66	954	-4
4.56	934	5
4.45	910	14
4.30	880	23
4.14	846	32
3.95	807	41
3.73	764	50
3.50	717	59
3.26	666	68
3.00	614	77
2.74	561	86
2.48	508	95
2.23	456	104
1.99	407	113
1.77	361	122
1.56	319	131
1.37	280	140
1.20	246	149
1.05	215	158
0.92	188	167
0.80	165	176
0.70	144	185
0.61	126	194
0.54	110	203
0.47	96	212
0.41	85	221
0.36	74	230
0.32	65	239
0.28	57	248
0.25	51	257
0.22	45	266
0.19	40	275
0.17	35	284
0.15	31	293
0.14	28	302

ED_002078G_00001322-00200

The Cylinder Head Temp Sensor uses a switchable input circuit to create two transfer functions for cold and hot range temperatures

CHT Temperature Sensor Transfer Function, Cold End		
Volts	**A/D counts in PCM**	**Temperature, degrees F**
4.899	1002	-40
4.861	995	-31
4.812	985	-22
4.75	972	-14
4.671	956	-4
4.572	936	4
4.452	911	14
4.309	882	22
4.14	847	32
3.95	808	40
3.737	765	48
3.508	717	58
3.26	666	68
3.00	614	77
2.738	560	87
2.478	507	96
2.226	455	105
1.985	406	114
1.759	360	122
1.551	317	132
1.362	279	141
1.193	244	149
1.043	213	159
0.91	186	168
0.794	162	176
0.693	142	186
0.604	124	194
0.528	108	203
0.462	95	204

CHT Temperature Sensor Transfer Function, Hot End		
Volts	**A/D counts in PCM**	**Temperature, degrees F**
4.235	866	168
4.119	843	168
3.993	817	176
3.858	789	185
3.714	760	194
3.563	729	203
3.408	697	212

3.244	664	221
3.076	629	230
2.908	595	239
2.740	561	248
2.575	527	257
2.411	493	266
2.252	461	275
2.099	430	284
1.953	400	294
1.813	371	303
1.680	344	312
1.556	318	320
1.439	294	329
1.329	272	338
1.228	251	347
1.133	232	356
1.046	214	366
0.965	197	375
0.891	182	383
0.822	168	392
0.760	155	401
0.701	144	408
0.648	133	415
0.599	123	422
0.555	113	428
0.513	105	433
0.476	97	438
0.441	90	442
0.409	84	447
0.380	78	450
0.353	72	454
0.328	67	457
0.306	63	460
0.285	58	463
0.265	54	465
0.248	51	468
0.231	47	470
0.216	44	472
0.202	41	474
0.190	39	475
0.178	36	477
0.167	34	478
0.156	32	480

IAT Rationality Test

The IAT rationality test determines if the IAT sensor is producing an erroneous temperature indication within the normal range of IAT sensor input.

The IAT sensor rationality test is run only once per power-up. The IAT sensor input is compared to the CHT sensor input (ECT sensor input on some applications) at key-on after a long (6 hour) soak. If the IAT sensor input and the CHT (ECT) sensor input agree within a tolerance (+/- 30 deg F), no malfunction is indicated and the test is complete. If the IAT sensor input and the CHT (ECT) sensor input differ by more than the tolerance, the vehicle must be driven over 35 mph for 5 minutes to confirm the fault. This is intended to address noise factors like sun load that can cause the IAT sensor to indicate a much higher temperature than the CHT (ECT) sensor after a long soak. Driving the vehicle attempts to bring the IAT sensor reading within the test tolerance. If the IAT sensor input remains outside of the tolerance after the vehicle drive conditions have been met, the test indicates a malfunction and the test is complete.

In addition to the start-up rationality check, an IAT "Out of Range" check is also performed. The test continuously, checks to see if IAT is greater than the “IAT Out of Range High threshold”, approximately 150 deg F. In order to prevent setting false DTC during extreme ambient or vehicle soak conditions, the same count up/count down timer used for the IAT startup rationality test is used to validate the fault. If IAT is greater than 150 deg F and vehicle speed is greater than ~ 40 mph for 250 seconds then set a P0111.

Either the IAT startup rationality test or the IAT Out of Range High test can set a P0111 DTC. The logic is designed so that either fault can trigger a “two-in-a-row” P0111 MIL, however, both faults must be OK before the P0111 DTC is cleared.

Block heater detection results in a no-call.

Intake Air Temperature Sensor Range/Performance Check Operation:	
DTCs	P0111 (range/performance)
Monitor execution	Once per driving cycle, at start-up
Monitor Sequence	None
Sensors OK	ECT/CHT, IAT, VSS
Monitoring Duration	Immediate or up to 30 minutes to register a malfunction

Typical Intake Air Temperature Sensor Range/Performance Entry Conditions		
Entry condition	Minimum	Maximum
Engine off (soak) time	6 hours	
Battery Voltage	11.0 Volts	
Time since engine start (if driving req'd)		30 min
Vehicle speed (if driving req'd)	40 mph	
Time above minimum vehicle speed (if driving req'd)	5 min	
IAT - ECT at start (block heater inferred)	-30 °F	-90 °F

Typical IAT sensor check malfunction thresholds:
IAT and ECT/CHT error at start-up > +/-30 deg F

ED_002078G_00001322-00203

Intake Air Temperature Sensor Out of Range High Check Operation:	
DTCs	P0111 (Out of Range High)
Monitor execution	Continuous
Monitor Sequence	None
Sensors OK	ECT/CHT, IAT, VSS
Monitoring Duration	250 seconds to register a malfunction

Typical Intake Air Temperature Sensor Out of Range high Entry Conditions		
Entry condition	Minimum	Maximum
Engine off (soak) time	6 hours	
Battery Voltage	11.0 Volts	
Vehicle speed	40 mph	
Time above minimum vehicle speed (if driving req'd)	5 min	

Typical IAT Sensor Out of Range High check malfunction thresholds:
IAT > 150 deg F

The IAT rationality test employs alternate statistical MIL illumination. This protocol allows up to 6 trips before MIL illumination based on the magnitude of the measured error. The greater the error the fewer number of trips before a DTC will be indicated. In the case of the IAT rationality test the measured error is the difference between the IAT input and the CHT (ECT) input.

The error space is divided into bands. Each band represents a range of error. There are two bands for each of; 5 trips to pending DTC, 4 trips to pending DTC, 3 trips to pending DTC, 2 trips to pending DTC and 1 trip to pending DTC. There are two bands for each because there is one band for positive error and one band for negative error of the same magnitude range.

Counters are maintained that keep track of how many trips a malfunction has occurred within each band. When a sufficient number of trips with a malfunction has been achieved in any band, a P0111 DTC will be set.

If an IAT error, trip to trip, remains just above the IAT-out-of-range error threshold, it will take 6 trips to illuminate the MIL. If the IAT-out-of-range error, trip to trip, is much larger (80 deg F), the MIL will illuminate in the standard 2 trips.

Note that immediately after an KAM clear/battery disconnect, the MIL will be set after two trips regardless of the amount the IAT error exceeds the threshold.

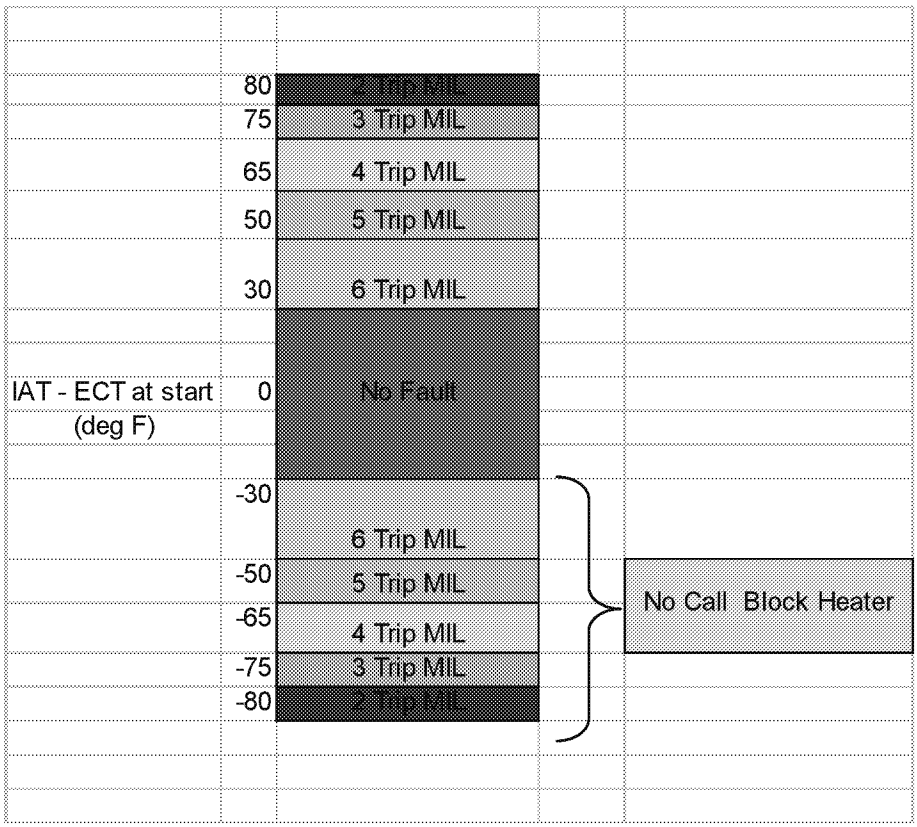

ED_002078G_00001322-00205

Fuel Rail Pressure Sensor

Fuel Rail Pressure Sensor Check Operation:	
DTCs	P0192 (low input), P0193 (high input)
Monitor execution	continuous
Monitor Sequence	None
Sensors OK	not applicable
Monitoring Duration	8 seconds to register a malfunction

Typical FRP sensor check malfunction thresholds:
Voltage < 0.049 volts or voltage > 4.88 volts

Fuel Rail Pressure Sensor Transfer Function		
FRP volts = [Vref * (4 * Fuel Pressure / 70) + 0.50] / 5.00		
Volts	**A/D counts in PCM**	**Pressure, psi**
4.85	993	76.125
4.50	922	70
4.00	820	61.25
3.50	717	52.5
3.00	614	43.75
2.50	512	35
2.00	410	26.25
1.50	307	17.5
1.00	205	8.75
0.50	102	0
0.15	31	-6.125

The FRP range/performance test checks to make sure that fuel rail pressure can be properly controlled by the electronic returnless fuel system. The FPS sensor is also checked for in-range failures that can be caused by loss of Vref to the sensor. Note that the FRP is referenced to manifold vacuum (via a hose) while the fuel rail pressure sensor is not referenced to manifold vacuum. It uses gage pressure. As a result, a mechanical gage in the fuel rail will display a different pressure than the FPR PID on a scan tool. The scan tool PID will read higher because of manifold vacuum.

FRP Range/Performance Check Operation:	
DTCs	P0191 (FRP range/performance), P1090 (stuck in range)
Monitor execution	Continuous
Monitor Sequence	None
Sensors OK	FRP
Monitoring Duration	8 seconds to register a malfunction

Typical FRP Sensor Range/Performance check entry conditions:		
Entry Condition	Minimum	Maximum
Demand pressure reasonable	35 psig	60 psig
Fuel level	15%	

Typical FRP Range/Performance check malfunction thresholds:
Fuel pressure error (demand – actual pressure) > 20 psig

Typical FRP Sensor Stuck check entry conditions:		
Entry Condition	Minimum	Maximum
FRP sensor input	0 psig	46 psig
FRP input not moving		1 psig / sec

Typical FRP Stuck check malfunction thresholds:
Fuel pressure error (demand – actual pressure) > 5 psig

ED_002078G_00001322-00207

Mass Air Flow Sensor

The analog MAF sensor uses a hot wire sensing element to measure the amount of air entering the engine. Air passing over the hot wire causes it to cool. This hot wire is maintained at 200°C (392°F) above the ambient temperature as measured by a constant cold wire. The current required to maintain the temperature of the hot wire is proportional to the mass air flow. The MAF sensor then outputs an analog voltage proportional to the intake air mass.

The MAF sensor is located between the air cleaner and the throttle body or inside the air cleaner assembly. Most MAF sensors have integrated bypass technology with an integrated IAT sensor. The hot wire electronic sensing element must be replaced as an assembly. Replacing only the element may change the air flow calibration.

For the 2011 MY, some vehicles will use a digital MAF sensor, which outputs a frequency proportional to the intake air mass.

MAF Sensor Check Operation:	
DTCs	Analog Sensor: P0102 (low input), P0103 (high input) Digital Sensor: P0100 (broken element), P0102 (low input), P0103 (high input)
Monitor execution	continuous
Monitor Sequence	none
Sensors OK	not applicable
Monitoring Duration	5 seconds to register a malfunction

Typical MAF sensor check malfunction thresholds:
Analog Sensor: Voltage < 0.244 volts and engine running or voltage > 4.785 volts engine rpm < 4,000 rpm Digital Sensor: With engine running, frequency < 750 Hz or frequency = 0

ED_002078G_00001322-00208

Manifold Absolute Pressure Sensor

The MAP (Manifold Absolute Pressure) sensor provides a voltage proportional to the absolute pressure in the intake manifold using a piezo-resistive silicon sensing element. The pressure sensor is typically mounted into a port on the engine intake manifold.

In the 2014 MY, some vehicles will be using MAP sensor in place of a MAF sensor for airflow measurement. The MAP sensor is checked for opens, shorts, or out-of-range values by monitoring the analog-to-digital (A/D) input voltage.

MAP Sensor Transfer Function		
Vout=(Vref / 5) * 0.0409523809* Pressure (in kPa) + -0.1095238095)		
Volts	Pressure, kPa	Pressure, Inches Hg
0.30	10.0	2.59
0.38	12.0	3.54
1.00	27.0	7.97
2.35	60.0	17.72
3.37	85.0	25.10
4.48	112.0	33.07
4.60	115.0	33.96

MAP Sensor Check Operation	
DTCs	P0107 (low voltage), P0108 (high voltage)
Monitor execution	continuous
Monitor Sequence	None
Sensors OK	not applicable
Monitoring Duration	5 seconds to register a malfunction

MAP electrical check entry conditions:
Battery voltage > 11.0 volts

Typical MAP sensor check malfunction thresholds:
Voltage < 0.19 volts or voltage > 4.88 volts

MAF/MAP - TP Rationality Test

The MAF or MAP and TP sensors are cross-checked to determine whether the sensor readings are rational and appropriate for the current operating conditions. (P0068) The test uses the calculated load value (LOAD) which can be computed from MAF for a mass air flow system or from MAP for a speed density system.

MAF/TP Rationality Check Operation:	
DTCs	P0068 - MAP / MAF - Throttle Position Correlation

Monitor execution	Continuous
Monitor Sequence	None
Sensors OK	
Monitoring Duration	3 seconds within test entry conditions

Typical MAF/TP rationality check entry conditions:		
Entry Condition	Minimum	Maximum
Engine RPM	550 rpm	minimum of 5000 rpm
Engine Coolant Temp	150 °F	

Typical MAF/TP rationality check malfunction thresholds:
Load > 60% and TP < 2.4 volts or Load < 30% and TP > 2.4 volts

ED_002078G_00001322-00210

Miscellaneous CPU Tests

Loss of Keep Alive Memory (KAM) power (a separate wire feeding the PCM) results is a P1633 DTC and immediate MIL illumination. (Used for those modules that use KAM.)

Vehicles that require tire/axle information and VIN to be programmed into the PCM Vehicle ID block (VID) will store a P1639 if the VID block is not programmed or corrupted.

P0602 - Powertrain Control Module Programming Error indicates that the Vehicle ID block check sum test failed.

P0603 - Powertrain Control Module Keep Alive Memory (KAM) Error indicates the Keep Alive Memory check sum test failed. (Used for those modules that use KAM.)

P0604 - Powertrain Control Module Random Access Memory (RAM) Error indicates the Random Access Memory read/write test failed.

P0605 - Powertrain Control Module Read Only Memory (ROM) Error indicates a Read Only Memory check sum test failed.

P0607 - Powertrain Control Module Performance indicates incorrect CPU instruction set operation, or excessive CPU resets.

P0610 - Powertrain Control Module indicates that one or more of the VID Block fields were configured incorrectly.

P068A - ECM/PCM Power Relay De-energized - Too Early. This fault indicates that NVRAM write did not complete successfully after the ignition key was turned off, prior to PCM shutdown.

P06B8 - Internal Control Module Non-Volatile Random Access Memory (NVRAM) Error indicates Permanent DTC check sum test failed

U0101 - Lost Communication with Transmission Control Module (for vehicles with standalone TCM)

P1934 – Lost Vehicle Speed Signal from ABS Module

Engine Off Timer Monitor

The engine off timer is either implemented in a hardware circuit in the PCM or is obtained via a CAN message from the Body Control Module.

If the timer is implemented in the PCM, the following applies:

There are two parts to the test. The first part determines that the timer is incrementing during engine off. The test compares ECT prior to shutdown to ECT at key-on. The ECT has cooled down more than 30 deg F and the engine had warmed up to at least 160 deg F prior to shutdown, then an engine off soak has occurred. If the engine off timer indicates a value less than 30 sec, then the engine of timer is not functioning and a P2610 DTC is set.

The second part looks at the accuracy of the engine off timer itself. The timer in the satellite chip is allowed to count up for 5 minutes with the engine running and compared to a different clock in the main microprocessor. If the two timers differ by more than 15 sec (5%), a P2610 DTC is set.

If engine off time is obtained from the BCM, the following applies. There are multiple parts to the test:

The PCM expects to get a CAN message with the engine off time from BCM shortly after start. If the engine off time is not available because of a battery disconnect, the CAN message is set to FFFFh and a U0422 is set (Invalid Data Received from BCM).

If the CAN message with engine off time is not available, a P2610 DTC is set and a U0140 is set (Lost Communication with BCM).

As above, the next part determines that the timer is incrementing during engine off. The test compares ECT prior to shutdown to ECT at key-on. The ECT has cooled down more than 30 deg F and the engine had warmed up to at least 160 deg F prior to shutdown, then an engine off soak has occurred. If the engine off timer indicates a value less than 30 sec, then the engine of timer is not functioning and a P2610 DTC is set.

The last part looks at the accuracy of the engine off timer itself. The timer in the BCM (Global Real Time) is sampled for 5 minutes with the engine running and compared to the clock in the main microprocessor. If the two timers differ by more than 15 sec (5%), a P2610 DTC is set.

Engine Off Timer Check Operation:	
DTCs	P2610
Monitor execution	Continuous within entry conditions
Monitor Sequence	None
Monitoring Duration	Immediately on startup or after 5 minutes

Typical Engine Off Timer check malfunction thresholds:
Engine off time < 30 seconds after inferred soak
Engine off timer accuracy off by > 15 sec.
Engine off time CAN message missing at startup

5 Volt Sensor Reference Voltage A Check:	
DTCs	P0642 - Sensor Reference Voltage "A" Circuit Low P0643 - Sensor Reference Voltage "A" Circuit High
Monitor execution	Continuous
Monitor Sequence	None
Sensors OK	not applicable
Monitoring Duration	5 sec to register a malfunction

Typical 5 Volt Sensor Reference Voltage A check entry conditions:		
Entry Condition	Minimum	Maximum
Ignition "ON"	NA	NA

Typical 5 Volt Sensor Reference Voltage A check malfunction thresholds:
P0642
Short to ground (signal voltage): < 4.75 V
P0643
Short to battery plus (signal voltage): > 5.25 V

5 Volt Sensor Reference Voltage A/B/C Check:	
DTCs	P06A6 - Sensor Reference Voltage "A" Circuit Range/Performance P06A7 - Sensor Reference Voltage "B" Circuit Range/Performance P06A8 - Sensor Reference Voltage "C" Circuit Range/Performance
Monitor execution	Continuous
Monitor Sequence	None
Sensors OK	not applicable
Monitoring Duration	0.5 sec to register a malfunction

Typical 5 Volt Sensor Reference Voltage A/B/C check entry conditions:		
Entry Condition	Minimum	Maximum
Ignition "ON"	NA	NA

Typical 5 Volt Sensor Reference Voltage A/B/C check malfunction thresholds:
P0646, P0647, P06A8 (used for Bosch Tricore modules)
Reference voltage: < 4.7 V or reference voltage: > 5.2 V

Central Vehicle Configuration

On some applications, the Body Control Module (BCM) transmits VIN, Tire Circumference, Axle Ratio and Cruise Control Configuration (CCC) over the vehicle CAN network to the ECM/PCM as well as to other modules in the vehicle that use this information. Valid data received by the ECM/PCM s stored into NVRAM. This feature is known as Central Vehicle Configuration.

CAN messages with this data are sent every time the vehicle is started. If the CAN messages are not received after start, a U0140 (Lost Communication with BCM) DTC is set. Next, the data is checked to ensure that it is in a valid range. If the VIN, tire, axle or CCC are not in a valid range, a U0422 (Invalid Data received from BCM) DTC is set.

The system is designed to automatically accept valid VIN, tire, axle and CCC data if only the default data ($FF) is stored. If the default VIN, tire and axle are not replaced with valid data at the vehicle assembly plant or after service, a P0630 (VIN and/or tire/axle not programmed) DTC is set and the MIL is illuminated.

Once the PCM has valid VIN, tire, axle and CCC data, and new data is received which does not match the currently stored data, the new data is not stored into NVRAM. If there is a data mismatch, a P160A (Vehicle Options Reconfiguration Error) DTC is set. The new data will not be accepted unless a service tool is used to execute a "learn" command. This allows a service technician to ensure that the vehicle uses the proper configuration data after a BCM or PCM repair. Once a "learn" command is executed, the PCM will accept the next valid VIN, tire, axle and CCC data, store it into NVRAM, and perform and OBD-II code clear which resets all diagnostic data.

The flow charts on the following pages describe the process.

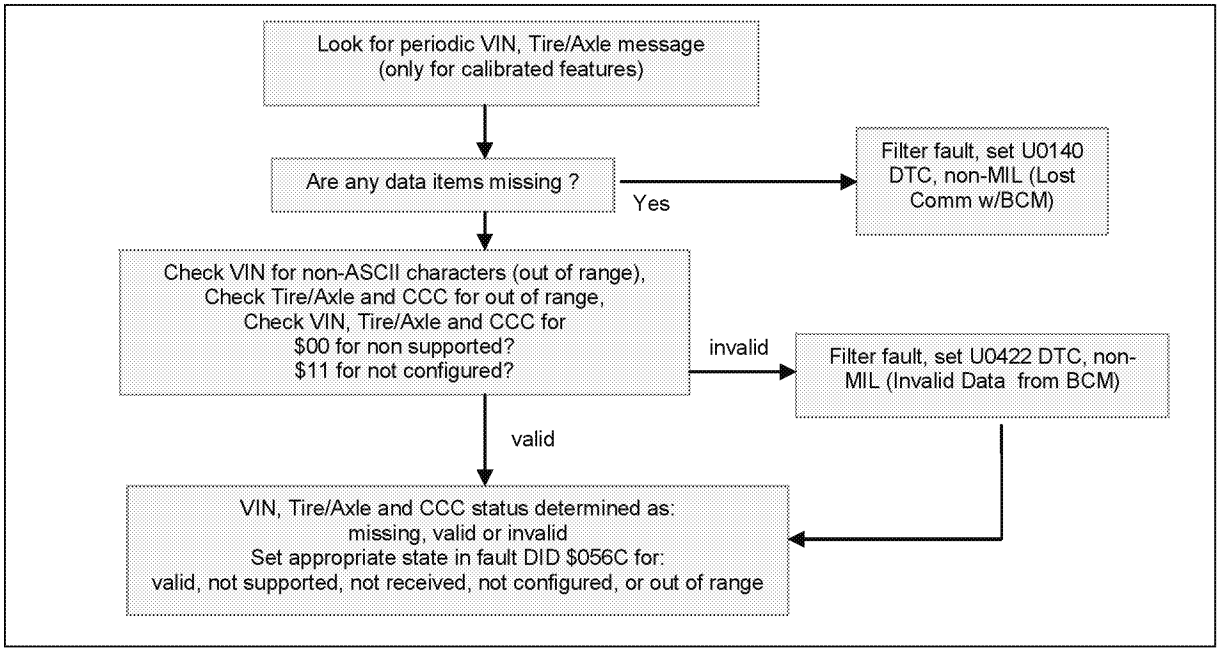

ED_002078G_00001322-00214

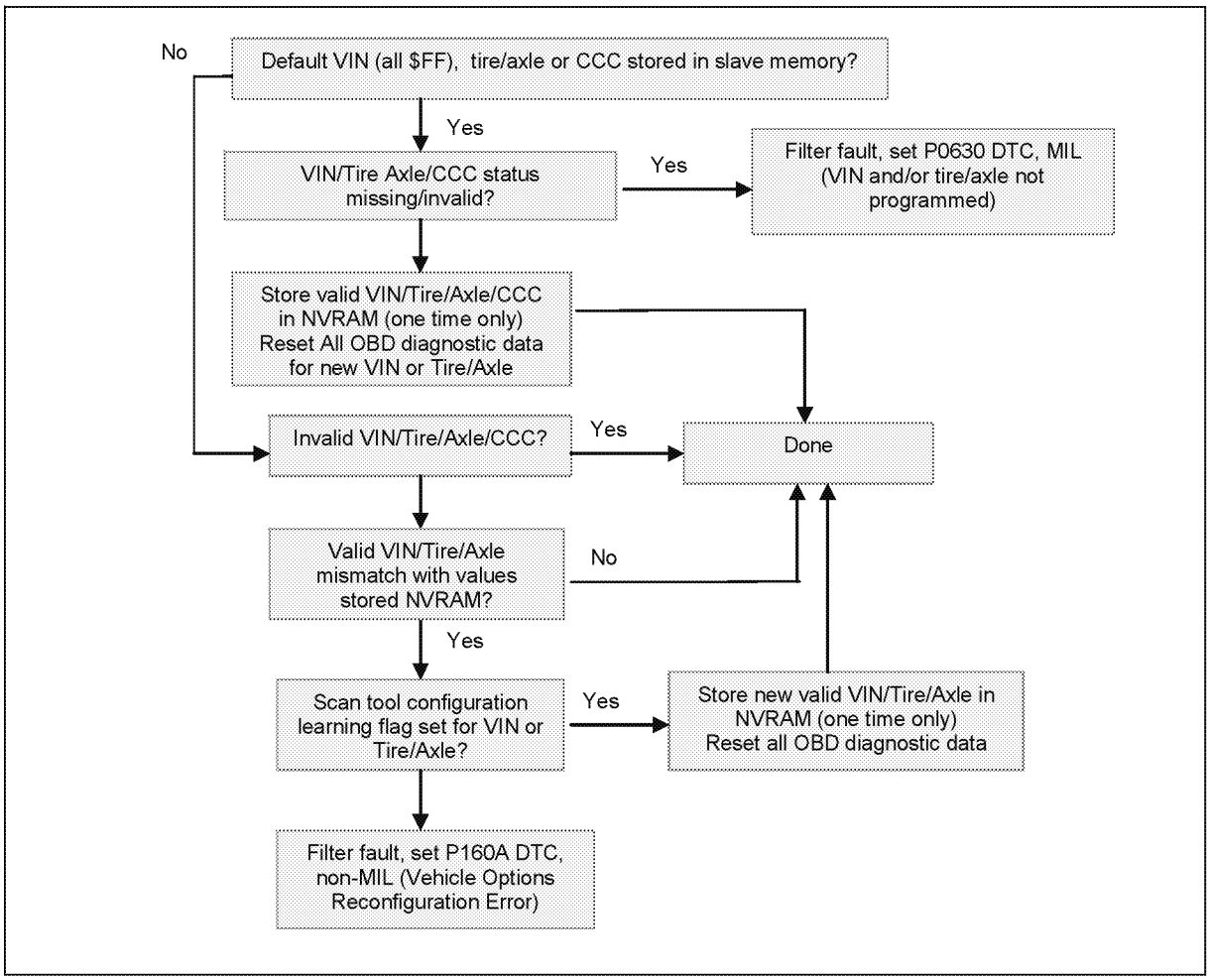

ED_002078G_00001322-00215

Ignition System Tests

New floating point processors no longer use an EDIS chip for ignition signal processing. The crank and cam position signals are now directly processed by the PCM/ECM microprocessor using a special interface called a Time Processing Unit or TPU, or General Purpose Time Array (GPTA), depending on the PCM/ECM. The signals to fire the ignition coil drivers also come from the microprocessor.

Historically, Ford has used a 36-1 tooth wheel for crankshaft position (40-1 on a V-10). Many engines still use a 36-1 wheel; however, some new engines are migrating to a 60-2 tooth wheel for crankshaft position. This was done to commonize ignition hardware and allow Ford to use some industry-standard PCM/ECM designs. 60-2 tooth crank wheels are being used on the 2011/2012 MY 2.0L GDI and GTDI engines, 1.6L GTDI engines and the 3.5L TIVCT GTDI engine.

Over the years, Ford ignition system have migrated away from Distributorless Ignition Systems (DIS) where a given coil pack fires two spark plugs at the same time (one spark plug fires during the compression stroke, the other spark plug fires during the exhaust stroke). All new engine now use Coil On Plug (COP) systems where there is an ignition coil and a coil driver for each spark plug, thus eliminating the need for secondary spark plug wires and improving reliability. Historically, Ford located the ignition coil drivers within the PCM/ECM, however, some new engines are migrating to coils where the driver is located on the coil itself. This eliminates the high current lines going from the PCM to the coils and again, commonizes ignition hardware to allow Ford to use some industry-standard PCM/ECM designs.

The ignition system is checked by monitoring various ignition signals during normal vehicle operation:

> CKP, the signal from the crankshaft 36-1-or 60-2 tooth wheel. The missing tooth is used to locate the cylinder pair associated with cylinder # 1 The microprocessor also generates the Profile Ignition Pickup (PIP) signal, a 50% duty cycle, square wave signal that has a rising edge at 10 deg BTDC for 36-1 systems and 12 deg BTDC for 60-2 systems.
>
> Camshaft Position (CMP), a signal derived from the camshaft to identify the #1 cylinder
>
> Coil primary current (driver in module ignition systems). The NOMI signal indicates that the primary side of the coil has achieved the nominal current required for proper firing of the spark plug. This signal is received as a digital signal from the coil drivers to the microprocessor. The coil drivers determine if the current flow to the ignition coil reaches the required current (typically 5.5 Amps for COP, 3.0 to 4.0 Amps for DIS) within a specified time period (typically > 200 microseconds for both COP and DIS).
>
> Coil driver circuit current and/or voltage (driver on coil ignition systems). The PCM/ECM coil driver IC checks for out of range current and voltage levels at the coil driver output that would indicate an open or short circuit fault. The fault could be located anywhere in the coil driver circuit: PCM/ECM, wiring harness, coil connector, or the driver circuit on the ignition coil. (Note this does not include the primary side windings. Faults in the primary side windings must be detected by the Misfire Monitor for driver on coil ignition systems).

First, several relationships are checked on the CKP signal. The microprocessor looks for the proper number of teeth (35 or 39 or 58) after the missing tooth is recognized; time between teeth too low (< 30 rpm or > 9,000 rpm); or the missing tooth was not where it was expected to be. If an error occurs, the microprocessor shuts off fuel and the ignition coils and attempts to resynchronize itself. It takes on revolution to verify the missing tooth, and another revolution to verify cylinder #1 using the CMP input. Note that if a P0320 or P0322 DTC is set on a vehicle with Electronic Throttle Control, (ETC), the ETC software will also set a P2106.

ED_002078G_00001322-00216

If the proper ratio of CMP events to PIP events is not being maintained (for example, 1 CMP edge for every 8 PIP edges for an 8-cylinder engine), it indicates a missing or noisy CMP signal (P0340). On applications with Variable Cam Timing (VCT), the CMP wheel has five teeth to provide the VCT system with more accurate camshaft control. The microprocessor checks the CMP signal for an intermittent signal by looking for CMP edges where they would not be expected to be. If an intermittent is detected, the VCT system is disabled and a P0344 (CMP Intermittent Bank 1) or P0349 (CMP intermittent Bank 2) is set.

Finally, for driver in module ignition systems, the relationship between NOMI events and PIP events is evaluated. If there is not an NOMI signal for every PIP edge (commanded spark event), the PCM will look for a pattern of failed NOMI events to determine which ignition coil has failed.

CKP Ignition System Check Operation:	
DTCs	P0320 Ignition Engine Speed Input Circuit P0322 Ignition Engine Speed Input Circuit No Signal P0339 Crankshaft Position Sensor "A" Circuit Intermittent P0335 Crankshaft Position Sensor "A" Circuit
Monitor execution	continuous
Monitor Sequence	none
Sensors OK	
Monitoring Duration	< 5 seconds

Typical CKP ignition check entry conditions:		
Entry Condition	Minimum	Maximum
Engine RPM for CKP	500 rpm	

Typical CKP ignition check malfunction thresholds:
P0320 or P0339: Incorrect number of teeth after the missing tooth is recognized, time between teeth too low (< 30 rpm or > 9,000 rpm), missing tooth was not where it was expected to be. P0322 or P0335: Camshaft indicates > 1 engine revolution while crankshaft signal missing

CMP Ignition System Check Operation:	
DTCs	P0340 - Intake Cam Position Circuit, Bank 1 P0344 – Intake Cam Position Circuit Intermittent, Bank 1 P0345 - Intake Cam Position Circuit, Bank 2 P0349 – Intake Cam Position Circuit Intermittent Bank 2 P0365 - Exhaust Cam Position Circuit, Bank 1 P0369 – Intake Cam Position Circuit Intermittent, Bank 1 P0390 - Exhaust Cam Position Circuit, Bank 2 P0394 – Exhaust Cam Position Circuit Intermittent Bank 2
Monitor execution	continuous
Monitor Sequence	none
Sensors OK	
Monitoring Duration	< 5 seconds

Typical CMP ignition check entry conditions:		
Entry Condition	Minimum	Maximum
Engine RPM for CMP	200 rpm	

Typical CMP ignition check malfunction thresholds:
Ratio of PIP events to CMP events: 4:1, 6:1, 8:1 or 10:1 based on engine cyl. Intermittent CMP signal – CMP signal in unexpected location

Coil Primary Ignition System Check Operation:	
DTCs	P0351 – P0360 (Coil primary) P2300, P2303, P2306, P2309, P2312, P2315, P2318, P2321, P2324, P2327 (Coil driver short circuit low) P2301, P2304, P2307, P2310, P2313, P2316, P2319, P2322, P2325, P2328 (Coil driver short circuit high) P06D1 (Internal control module ignition coil control module performance)
Monitor execution	Continuous
Monitor Sequence	None
Sensors OK	
Monitoring Duration	< 1 seconds

Typical Coil primary ignition check entry conditions:		
Entry Condition	Minimum	Maximum
Engine RPM for coil primary	200 rpm	Minimum of 3200 rpm
Positive engine torque	Positive torque	
Battery Voltage	11 volts	16 volts

Typical Coil primary ignition check malfunction thresholds:
P035x (driver in module Ignition systems): Ratio of PIP events to IDM or NOMI events 1:1 P035x, P23xx (driver on coil Ignition systems): Coil driver circuit current and/or voltage out of range of open and short circuit limits. P06D1 (driver on coil Ignition systems): Missing communication from coil driver IC.

If an ignition coil primary circuit failure is detected for a single cylinder or coil pair, the fuel injector to that cylinder or cylinder pair will be shut off for 30 seconds to prevent catalyst damage. Up to two cylinders may be disabled at the same time on 6 and 8 cylinder engines and one cylinder is disabled on 4 cylinder engines. After 30 seconds, the injector is re-enabled. If an ignition coil primary circuit failure is again detected, (about 0.10 seconds), the fuel injector will be shut off again and the process will repeat until the fault is no longer present. Note that engine misfire can trigger the same type of fuel injector disablement.

Knock Sensor

Due to the design of the knock sensor input circuitry, a short to battery, short to ground, or open circuit all result is a low knock signal voltage output. This output voltage is compared to a noise signal threshold (function of engine rpm and load) to determine knock sensor circuit high, circuit low or performance faults.

Some PCM/ECM modules use a driver circuit that will periodically and actively test the knock sensor lines for short circuit faults. In these modules, supplemental codes can be set for the short circuit condition.

Some PCM/ECM modules use a standalone Knock IC. In these modules, the knock signal processing chip SPI bus is checked for proper communication between the main processor and the chip used as the interface the knock sensor.

Knock Sensor Check Operatio	
DTCs	P0325 – Knock Sensor 1 Circuit P0330 – Knock Sensor 2 Circuit P0327 – Knock Sensor 1 Circuit Low P0328 – Knock Sensor 1 Circuit High P0332 – Knock Sensor 2 Circuit Low P0333 – Knock Sensor 2 Circuit High P06B6 – Lost Comm with Knock IC Chip
Monitor execution	Continuous within entry conditions
Monitor Sequence	None
Sensors OK	Not in failsafe cooling mode
Monitoring Duration	2.5 seconds

Typical Knock Sensor check entry conditions:		
Entry Condition	Minimum	Maximum
Time since engine start (function of ECT)	60 to 20 sec	
Engine Coolant Temperature	140 °F	
Engine load	35%	
Engine speed	1500 rpm	6000 rpm

Typical Knock Sensor functional check malfunction thresholds:
P0325 & P0330 Knock signal too low (function of engine speed): < 30 to 150 A/D counts (out of 255)
P0327, P0332 (used only for PCM/ECM with corresponding diagnostic circuit)
Voltage level from active knock sensor circuit probe below limit
P0328, P0333 (used only for PCM/ECM with corresponding diagnostic circuit)
Voltage level from active knock sensor circuit probe above limit)
P06B6 (used only for PCM/ECM with standalone Knock IC)
Cylinder events with missing communication from Knock IC > 200

Engine Outputs

The Idle Air Control (IAC) solenoid is checked electrically for open and shorts (P0511) and is functionally checked by monitoring the closed loop idle speed correction required to maintain the desired idle rpm. If the proper idle rpm cannot be maintained and the system has a high rpm (+200) or low rpm error (-100) greater than the malfunction threshold, an IAC malfunction is indicated. (P0507, P0506)

IAC Check Operation:	
DTCs	P0511 (opens/shorts) P0507 (functional - overspeed) P0506 (functional - underspeed)
Monitor execution	once per driving cycle
Monitor Sequence	None
Sensors OK	
Monitoring Duration	15 seconds

Typical IAC functional check entry conditions:		
Entry Condition	Minimum	Maximum
Engine Coolant Temp	150 °F	
Time since engine start-up	30 seconds	
Closed loop fuel	Yes	
Throttle Position (at idle, closed throttle, no dashpot)	Closed	Closed

Typical IAC functional check malfunction thresholds:
For underspeed error: Actual rpm 100 rpm below target, closed-loop IAC correction > 1 lb/min
For overspeed error: Actual rpm 200 rpm above target, closed-loop IAC correction < .2 lb/min

The PCM monitors the "smart" driver fault status bit that indicates either an open circuit, short to power or short to ground.

Injector Check Operation:	
DTCs	P0201 through P0210 (opens/shorts)
Monitor execution	Continuous within entry conditions
Monitor Sequence	None
Monitoring Duration	5 seconds

Typical injector circuit check entry conditions:		
Entry Condition	Minimum	Maximum
Battery Voltage	11.0 volts	

Electronic Returnless Fuel System

Electronic Returnless Fuel Systems (ERFS) utilize a Fuel Pump Driver Module (FPDM) to control fuel pressure. The PCM uses a Fuel Rail Pressure Sensor (FRP) for feedback. The PCM outputs a duty cycle to the FPDM to maintain the desired fuel rail pressure. During normal operation, the PCM will output a FP duty cycle from 5% to 51%. The FPDM will run the fuel pump at twice this duty cycle, e.g. if the PCM outputs a 42% duty cycle, the FPDM will run the fuel pump at 84%. If the PCM outputs a 75% duty cycle, the FPDM will turn off the fuel pump.

The FPDM returns a duty cycled diagnostic signal back to the PCM on the Fuel Pump Monitor (FPM) circuit to indicate if there are any faults in the FPDM.

If the FPDM does not out any diagnostic signal, (0 or 100% duty cycle), the PCM sets a P1233 DTC. This DTC is set if the FPDM loses power. This can also occur if the Inertia Fuel Switch is tripped.

If the FPDM outputs a 25% duty cycle, it means that the fuel pump control duty cycle is out of range. This may occurs if the FPDM does not receive a valid control duty cycle signal from the PCM. The FPDM will default to 100% duty cycle on the fuel pump control output. The PCM sets a P1235 DTC.

If the FPDM outputs a 75% duty cycle, it means that the FPDM has detected an open or short on the fuel pump control circuit. The PCM sets a P1237 DTC.

If the FPDM outputs a 50% duty cycle, the FPDM is functioning normally.

Fuel Pump Driver Module Check Operation:	
DTCs	P1233 – FPDM disabled of offline P1235 – Fuel pump control out of range P1237 – Fuel pump secondary circuit
Monitor execution	Continuous, voltage > 11.0 volts
Monitor Sequence	None
Monitoring Duration	3 seconds

Mechanical Returnless Fuel System (MRFS) — Single Speed

An output signal from the PCM is used to control the electric fuel pump. The PCM grounds the FP circuit, which is connected to the coil of the fuel pump relay. This energizes the coil and closes the contacts of the relay, sending B+ through the FP PWR circuit to the electric fuel pump. When the ignition is turned on, the electric fuel pump runs for about 1 second and is turned off by the PCM if engine rotation is not detected.

The FPM circuit is spliced into the fuel pump power (FP PWR) circuit and is used by the PCM for diagnostic purposes. With the fuel pump on and the FPM circuit high, the PCM can verify the FP PWR circuit from the fuel pump relay to the FPM splice is complete. It can also verify the fuel pump relay contacts are closed and there is a B+ supply to the fuel pump relay.

Mechanical Returnless Fuel System (MRFS) — Dual Speed

The FP signal is a duty cycle command sent from the PCM to the fuel pump control module. The fuel pump control module uses the FP command to operate the fuel pump at the speed requested by the PCM or to turn the fuel pump off. A valid duty cycle to command the fuel pump on, is in the range of 15-47%. The fuel pump control module doubles the received duty cycle and provides this voltage to the fuel pump as a percent of the battery voltage. When the ignition is turned on, the fuel pump runs for about 1 second and is requested off by the PCM if engine rotation is not detected.

FUEL PUMP DUTY CYCLE OUTPUT FROM PCM

FP Duty Cycle Command	PCM Status	Fuel Pump Control Module Actions
0-15%	Invalid off duty cycle	The fuel pump control module sends a 20% duty cycle signal on the fuel pump monitor (FPM) circuit. The fuel pump is off.
37%	Normal low speed operation.	The fuel pump control module operates the fuel pump at the speed requested. The fuel pump control module sends a 60% duty cycle signal on FPM circuit.
47%	Normal high speed operation.	The fuel pump control module operates the fuel pump at the speed requested. The fuel pump control module sends a 60% duty cycle signal on FPM circuit.
51-67%	Invalid on duty cycle.	The fuel pump control module sends a 20% duty cycle signal on the FPM circuit. The fuel pump is off.
67-83%	Valid off duty cycle	The fuel pump control module sends a 60% duty cycle signal on FPM circuit. The fuel pump is off.
83-100%	Invalid on duty cycle.	The fuel pump control module sends a 20% duty cycle signal on the FPM circuit. The fuel pump is off.

The fuel pump control module communicates diagnostic information to the PCM through the FPM circuit. This information is sent by the fuel pump control module as a duty cycle signal. The 4 duty cycle signals that may be sent are listed in the following table.

FUEL PUMP CONTROL MODULE DUTY CYCLE SIGNALS

Duty Cycle	Comments
20%	This duty cycle indicates the fuel pump control module is receiving an invalid duty cycle from the PCM.
40%	For vehicles with event notification signal, this duty cycle indicates the fuel pump control module is receiving an invalid event notification signal from the RCM. For vehicles without event notification signal, this duty cycle indicates the fuel pump control module is functioning normally.
60%	For vehicles with event notification signal, this duty cycle indicates the fuel pump control module is functioning normally.
80%	This duty cycle indicates the fuel pump control module is detecting a concern with the secondary circuits.

MRFS Check Operation:	
DTCs	P025A – Fuel Pump Control Circuit (opens/shorts) P025B – Invalid Fuel Pump Control Data (20% duty cycle from FPM) P0627 – Fuel Pump Secondary Circuit (80% duty cycle from PFM) U2010B – Fuel Pump Disabled Circuit (40% duty cycle from FPM) U0109 – Loss of Communication with Fuel Pump Module
Monitor execution	once per driving cycle
Monitor Sequence	None
Sensors OK	
Monitoring Duration	2 seconds

Typical MRFS check entry conditions:		
Entry Condition	Minimum	Maximum
Battery Voltage	11 volts	

Typical MRFS check malfunction thresholds:
P025A
FP output driver indicates fault
P025B, P0627, U210B
Fuel Pump Monitor duty cycle feedback of 20, 40 or 80%
U0191
No Fuel Pump Monitor duty cycle feedback

There are several different styles of hardware used to control airflow within the engine air intake system. In general, the devices are defined based on whether they control in-cylinder motion (charge motion) or manifold dynamics (tuning).

Systems designed to control charge motion are defined to be Intake Manifold Runner Controls. IMRC systems generally have to modify spark when the systems are active because altering the charge motion affects the burn rate within the cylinder.

Systems designed to control intake manifold dynamics or tuning are defined to be Intake Manifold Tuning Valves. IMTV systems generally do not require any changes to spark or air/fuel ratio because these systems only alter the amount of airflow entering the engine.

Intake Manifold Runner Control Systems

The Intake Manifold Runner Control (IMRC) consists of a remote mounted, electrically motorized actuator with an attaching cable for each housing on each bank. Some applications will use one cable for both banks. The cable or linkage attaches to the housing butterfly plate levers. (The Focus IMRC uses a motorized actuator mounted directly to a single housing without the use of a cable.)

The IMRC housing is an aluminum casting with two intake air passages for each cylinder. One passage is always open and the other is opened and closed with a butterfly valve plate. The housing uses a return spring to hold the butterfly valve plates closed. The motorized actuator houses an internal switch or switches, depending on the application, to provide feedback to the PCM indicating cable and butterfly valve plate position.

Below approximately 3000 rpm, the motorized actuator will not be energized. This will allow the cable to fully extend and the butterfly valve plates to remain closed. Above approximately 3000 rpm, the motorized actuator will be energized. The attaching cable will pull the butterfly valve plates into the open position. (Some vehicles will activate the IMRC near 1500 rpm.)

The Intake Manifold Swirl Control used on the 2.3L Ranger consists of a manifold mounted vacuum actuator and a PCM controlled electric solenoid. The linkage from the actuator attaches to the manifold butterfly plate lever. The IMSC actuator and manifold are composite/plastic with a single intake air passage for each cylinder. The passage has a butterfly valve plate that blocks 60% of the opening when actuated, leaving the top of the passage open to generate turbulence. The housing uses a return spring to hold the butterfly valve plates open. The vacuum actuator houses an internal monitor circuit to provide feedback to the PCM indicating butterfly valve plate position.

Below approximately 3000 rpm, the vacuum solenoid will be energized. This will allow manifold vacuum to be applied and the butterfly valve plates to remain closed. Above approximately 3000 rpm, the vacuum solenoid will be de-energized. This will allow vacuum to vent from the actuator and the butterfly valve plates to open.

IMRC System Check Operation:	
DTCs	P2014 - IMRC input switch electrical check, Bank 1 P2008 - IMRC output electrical check P2004 - IMRC stuck open, electric operated P2004 – IMRC stuck open, vacuum operated, Bank 1 P2005 – IMRC stuck open, vacuum operated, Bank 2 P2006 – IMRC stuck closed, electric operated
Monitor execution	Continuous, after ECT > 40 deg F
Monitor Sequence	None
Sensors OK	
Monitoring Duration	5 seconds

Typical IMRC functional check malfunction thresholds
IMRC plates do not match commanded position (functional)
IMRC switches open/shorted (electrical)

Intake Manifold Tuning Valve Systems

The intake manifold tuning valve (IMTV) is a motorized actuated unit mounted directly to the intake manifold. The IMTV actuator controls a shutter device attached to the actuator shaft. There is no monitor input to the PCM with this system to indicate shutter position.

The motorized IMTV unit will not be energized below approximately 2600 rpm or higher on some vehicles. The shutter will be in the closed position not allowing airflow blend to occur in the intake manifold. Above approximately 2600 rpm or higher, the motorized unit will be energized. The motorized unit will be commanded on by the PCM initially at a 100 percent duty cycle to move the shutter to the open position and then falling to approximately 50 percent to continue to hold the shutter open.

IMTV Check Operation:	
DTCs	P1549 or P0660 - IMTV output electrical check (does not illuminate MIL)
Monitor execution	continuous
Monitor Sequence	None
Sensors OK	
Monitoring Duration	5 seconds

Engine Cooling System Outputs

The engine cooling system may contain multiple control valves for improving fluid warm-up rates of both the engine and transmission. These valves are PCM controlled and primarily used for thermal control of engine metal and transmission fluid temperatures by diverting engine coolant to the appropriate component. These digital outputs include an engine coolant bypass valve (CBV), a heater core shut-off valve (HCSO), an active transmission heating valve (ATWU-H), and an active transmission cooling valve (ATWU-C).

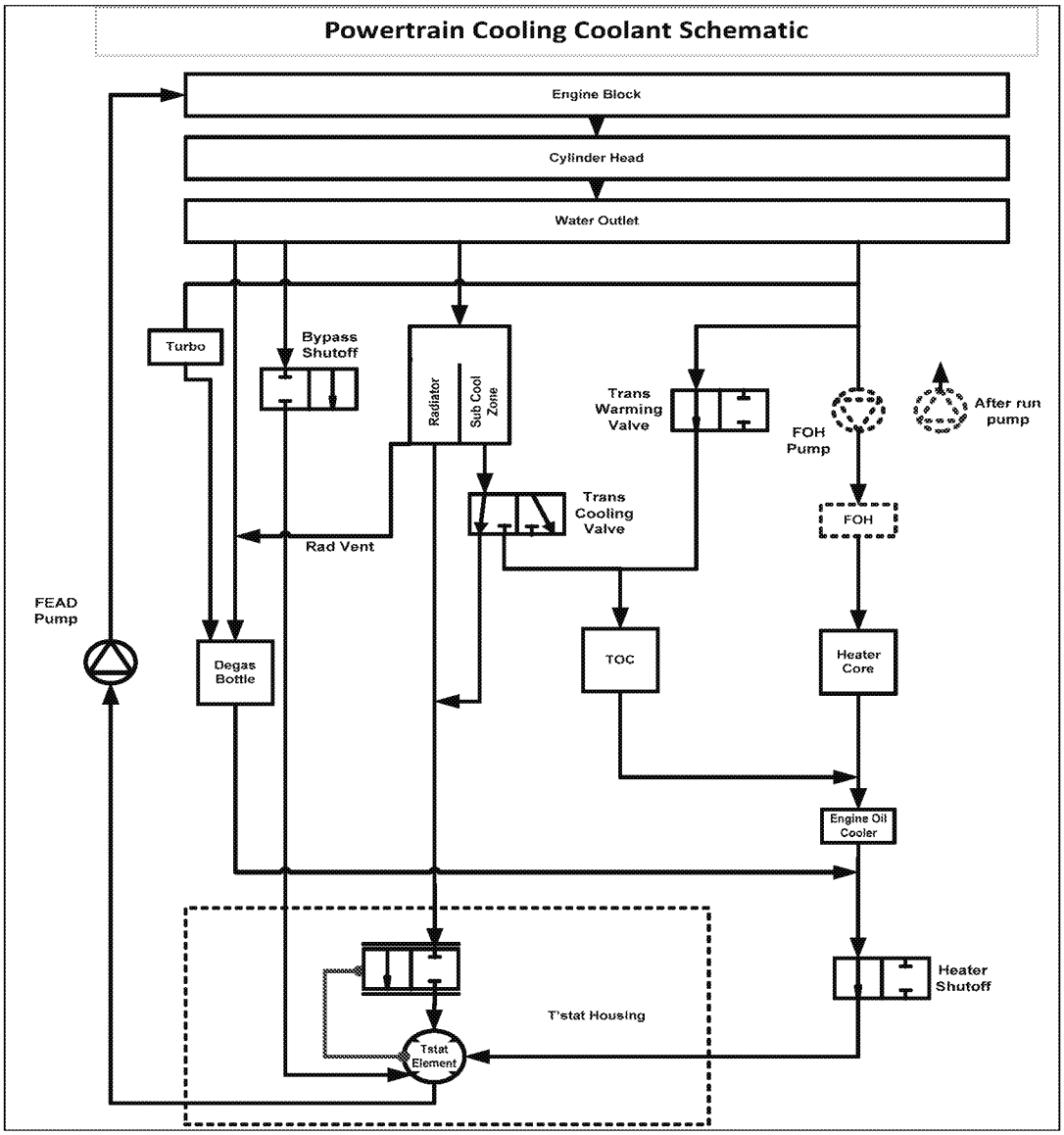

The Coolant Bypass Valve is normally closed (de-energized) forcing all of the engine coolant through the radiator to provide maximum "cooling" of the engine and components when the thermostat is open. When opened, a portion of the engine coolant bypasses the radiator providing for coolant pressure and flow control. The Heater Core Shut Off valve has a single purpose which is to limit coolant flow for fast engine warm-up. The ATWU-C valve will transfer engine coolant from the sub-radiator to the Transmission Oil Cooler (TOC) when energized, resulting in a heat transfer from the transmission into the engine coolant (over-temperature control of the transmission). The ATWU-H valve is used to provide hot engine coolant to the TOC to improve transmission fluid temperature control.

ED_002078G_00001322-00227

The Coolant Bypass Valve output circuit is checked for opens and shorts (P26B7).

Coolant Bypass Valve Solenoid Check Operation:	
DTCs	P26B7 – Coolant Bypass Valve Solenoid Circuit
Monitor execution	continuous
Monitor Sequence	None
Sensors OK	not applicable
Monitoring Duration	5 seconds

Typical Coolant Bypass Valve Solenoid check malfunction thresholds:
P26B7 (Coolant Bypass Valve Solenoid Circuit): open/shorted

The Heater Core Shut-Off Valve output circuit is checked for opens and shorts (P26BD).

Heater Core Shut-Off Valve Solenoid Check Operation:	
DTCs	P26BD – Heater Core Shut-Off Valve Solenoid Circuit
Monitor execution	continuous
Monitor Sequence	None
Sensors OK	not applicable
Monitoring Duration	5 seconds

Typical Heater Core Shut-Off Valve Solenoid check malfunction thresholds:
P26BD (Heater Core Shut-Off Valve Solenoid Circuit): open/shorted

The Active Transmission Heating Valve output circuit is checked for opens and shorts (P2681).

Active Transmission Heating Valve Solenoid Check Operation:	
DTCs	P2681 – Active Transmission Heating Valve Solenoid Circuit
Monitor execution	continuous
Monitor Sequence	None
Sensors OK	not applicable
Monitoring Duration	5 seconds

Typical Active Transmission Heating Valve Solenoid check malfunction thresholds:
P26B7 (Active Transmission Heating Valve Solenoid Circuit): open/shorted

The Active Transmission Cooling Valve output circuit is checked for opens and shorts (P26AC).

Active Transmission Cooling Valve Solenoid Check Operation:	
DTCs	P26AC – Active Transmission Cooling Valve Solenoid Circuit
Monitor execution	continuous
Monitor Sequence	None
Sensors OK	not applicable
Monitoring Duration	5 seconds

Typical Active Transmission Cooling Valve Solenoid check malfunction thresholds:
P26AC (Active Transmission Cooling Valve Solenoid Circuit): open/shorted

Auxiliary Coolant System Pumps

Some engines will include an auxiliary coolant system pump that is PCM controlled. This is a second cooling pump in the main cooling loop. It is a low power electrically controlled pump which is used to provide engine coolant flow under conditions when the engine is not running and the main mechanical cooling pump is inactive. These auxiliary pumps can be used for two primary purposes: 1) to provide coolant flow through the cabin heat exchanger (heater core) which generates heat for the vehicle cabin (stop/start equipped vehicles), and 2) to provide coolant flow to engine components for the purposes of component protection after the engine is shut-off. On turbo equipped vehicles, engine coolant is used to cool the turbo system bearings resulting in a thermal transfer of heat into the coolant. After-run coolant flow may be required to prevent localized coolant boiling that can damage some cooling system components (particularly the degas bottle).

The auxiliary cooling pump diagnostics include circuit checks for Open (P2600), short-to-power (P2603), short-to-ground (P2602), and a functional performance check (P2601).

Auxiliary Cooling System Pump Check Operation:	
DTCs	P2600 – Coolant Pump “A” Control Circuit/Open P2601 – Coolant Pump “A” Control Performance/Stuck Off P2602 – Coolant Pump “A” Control Circuit Low P2603 – Coolant Pump “A” Control Circuit High
Monitor execution	continuous
Monitor Sequence	None
Sensors OK	not applicable
Monitoring Duration	5 seconds

Typical auxiliary cooling system pump circuit check entry conditions:		
Entry Condition	Minimum	Maximum
Battery Voltage	11.0 volts	

ED_002078G_00001322-00230

Comprehensive Component Monitor - Transmission

General

The MIL is illuminated for all emissions related electrical component malfunctions. For malfunctions attributable to a mechanical component (such as a clutch, gear, band, valve, etc.), some transmissions are capable of not commanding the mechanically failed component and providing the remaining maximum functionality (functionality is reassessed on each power up)- in such case a non-MIL Diagnostic Trouble Code (DTC) will be stored and, if so equipped, a Transmission Control Indicator Light (TCIL) will flash.

Transmission Inputs

Transmission Range Sensor Check Operation:	
DTCs	P0705 invalid pattern for digital TRS P0706 Out of range signal frequency for PWM TRS P0707 Signal out of range low for PWM TRS P0708 Open circuit for digital TRS or signal out of range high for PWM TRS
Monitor execution	Continuous
Monitor Sequence	None
Sensors OK	
Monitoring Duration	Up to 30 seconds for pattern recognition, 5 seconds for analog faults

Typical TRS check entry conditions:		
Auto Transmission Entry Conditions	Minimum	Maximum
Gear selector position	each position for up to 30 seconds	480 seconds

Typical TRS malfunction thresholds:	
Digital TRS:	Invalid pattern from 3 or 5 digital inputs and/or 1 analog circuit open for 5 seconds
4-bit digital TRS:	Invalid pattern for 200 ms
Analog TRS:	Voltage > 4.8 volts or < 0.2 volts for 5 seconds
Dual analog TRS:	Voltage > 4.84 volts or < 0.127 volts for 200 ms or Sum of both inputs is outside the range of 5.0 volts +/- 0.29 volts for 200 ms
PWM TRS:	Frequency > 175 Hz or < 100 Hz, Duty Cycle > 90% or < 10%

Most vehicle applications no longer have a standalone vehicle speed sensor input. The PCM sometimes obtains vehicle speed information from another module on the vehicle, i.e. ABS module. In most cases, however, vehicle speed is calculated in the PCM by using the transmission output shaft speed sensor signal and applying a conversion factor for axle ratio and tire programmed into the Vehicle ID block. A Vehicle Speed Output pin on the PCM provides the rest of the vehicle with the standard 8,000 pulses/mile signal.

Note: If the Vehicle ID block has not been programmed or has been programmed with an out-of-range (uncertified) tire/axle ratio, a P1639 DTC will be stored and the MIL will be illuminated immediately.

Vehicle Speed Sensor Functional Check Operation:	
DTCs	P0500 – VSS circuit
Monitor execution	Continuous
Monitor Sequence	None
Sensors OK	
Monitoring Duration	30 seconds

Typical VSS functional check entry conditions:		
Auto Transmission Entry Conditions	Minimum	Maximum
Gear selector position	drive	
Engine rpm (above converter stall speed) OR	3000 rpm	
Turbine shaft rpm (if available) OR	1500 rpm	
Output shaft rpm	650 rpm	
Vehicle speed (if available)	15 mph	
Manual Transmission Entry Conditions		
Engine load	50 %	
Engine rpm	2400 rpm	

Typical VSS functional check malfunction thresholds:
Vehicle is inferred to be moving with positive driving torque and VSS is < 1 - 5 mph for 5 seconds

Output Shaft Speed Sensor Functional Check Operation:	
DTCs	P0720 – OSS circuit P0721 – OSS range/performance -F-21, 6HP26 P0722 – OSS no signal P0723 – OSS intermittent/erratic – 6HP26
Monitor execution	Continuous
Monitor Sequence	None
Sensors OK	TSS, Wheel Speed
Monitoring Duration	30 seconds

Typical OSS functional check entry conditions:		
Auto Transmission Entry Conditions	Minimum	Maximum
Gear selector position	drive	
Engine rpm (above converter stall speed) OR	3000 rpm	
Primary Pulley Speed (CFT30) OR	400 rpm	
Turbine shaft rpm (if available) OR	1500 rpm	
Output shaft rpm	300 - 650 rpm	
Vehicle speed (if available)	12.5 - 15 mph	

Typical OSS functional check malfunction thresholds:
Circuit/no signal - vehicle is inferred to be moving with positive driving torque and OSS < 100 to 200 rpm for 5 to 30 seconds
6HP26 Circuit/no signal: open or short circuit for > 0.6 seconds
6HP Range/Performance: > 200 rpm difference between OSS and wheel speed and > 250 rpm difference between OSS and input shaft speed
F21 Range/Performance: TSS, ABS wheel speed and engine rpm correlate properly, but OSS error is greater than 15% for 10 seconds
CFT30 Range/Performance: ABS wheel speed indicates a 6.24 mph difference with OSS calculated wheel speed
6HP26 Intermittent/Erratic: > -1000 rpm instantaneous change with locked torque converter clutch
CFT30 Intermittent/Erratic: > 6000 rpm/sec change

Intermediate Shaft Speed Sensor Functional Check Operation:	
DTCs	P0791 – ISS circuit
Monitor execution	Continuous
Monitor Sequence	None
Sensors OK	
Monitoring Duration	30 seconds

Typical ISS functional check entry conditions:		
Auto Transmission Entry Conditions	Minimum	Maximum
Gear selector position	drive	
Engine rpm (above converter stall speed) OR	3000 rpm	
Turbine shaft rpm (if available) OR	1500 rpm	
Output shaft rpm	650 rpm	
Vehicle speed (if available)	15 mph	

Typical ISS functional check malfunction thresholds:
Vehicle is inferred to be moving with positive driving torque and ISS < 250 rpm for 5 seconds

Turbine Shaft Speed Sensor Functional Check Operation:	
DTCs	P0715 – TSS circuit / no signal P0718 – TSS erratic signal
Monitor execution	Continuous
Monitor Sequence	None
Sensors OK	OSS, Wheel Speed
Monitoring Duration	30 seconds

Typical TSS functional check entry conditions:		
Auto Transmission Entry Conditions	Minimum	Maximum
Gear selector position	Forward range	
Engine rpm (above converter stall speed) OR	3000 rpm	
Output shaft rpm OR	600 - 650 rpm	
Vehicle speed (if available)	12.5 - 15 mph	

Typical TSS functional check malfunction thresholds:
Circuit/no signal - vehicle is inferred to be moving with positive driving torque and TSS < 200 rpm for 5 – 30 seconds Erratic signal – observe 200 turbine speed spikes > 400 rpm with no more than 1.5 seconds between spikes

Transmission Fluid Temperature Sensor Functional Check Operation:	
DTCs (non-MIL)	P0711 – in range failure P0712 – short to ground P0713 – open circuit
Monitor execution	continuous
Monitor Sequence	none
Sensors OK	ECT substituted if TFT has malfunction TFT inferred from pressure solenoids on CFT30
Monitoring Duration	5 seconds for electrical, 600 seconds for functional check

Typical TFT Stuck Low/High check entry conditions:		
Auto Transmission Entry Conditions	Minimum	Maximum
Engine Coolant Temp (hot or cold, not midrange)	> 100 °F	< 20 °F
Time in run mode	500 – 600 sec	
Time in gear, vehicle moving, positive torque	150 sec	
Vehicle Speed	15 mph	
Time with engine off (cold start) OR	420 min	
Engine Coolant Temp AND Trans Fluid Temp (inferred cold start)		122 °F

Typical TFT malfunction thresholds:
Opens/shorts: TFT voltage <0.05 or > 4.6 volts for 5 – 12 seconds TFT Stuck low/high, i.e. TFT stuck at high temperature or stuck at low temperature): Stores a fault code if TFT stabilizes (stops increasing if temperature < 70 deg F, stops decreasing if temperature > 225 deg F) before reaching the temperature region where all MIL tests are enabled (70 to 225 deg F). If TFT remains constant (+/- 2 deg F) for approximately 2.5 minutes of vehicle driving outside the 70 to 225 deg F zone a P0711 fault code will be stored. Old logic used to indicate a "pass" for a single delta, and not test until the normal operating region (70-225 deg F) was reached.

ED_002078G_00001322-00236

Transmission Outputs

Shift Solenoid Check Operation:	
DTCs	SS A - P0750 - open circuit, P0751 – functionally failed off P0752 – functionally failed on P0973 – short to ground P0974 - shorts to power P1714 ISIG functional (4R70 only, replaces P0751, P0752) SS B - P0755 - open circuit P0756 – functionally failed off P0757 – functionally failed on P0976 – short to ground P0977 - shorts to power P1715 ISIG functional (4R70 only, replaces P0756, P0757) SS C - P0760 - open circuit P0761 – functionally failed off P0762 – functionally failed on P0979 – short to ground P0980 - shorts to power SS D P0765 - open circuit P0766 – functionally failed off P0767 – functionally failed on P0982 – short to ground P0983 - shorts to power SS E - P0770 - open circuit P0771 – functionally failed off P0772 – functionally failed on P0985 – short to ground P0986 - shorts to power
Monitor execution	electrical - continuous, functional - during off to on solenoid transitions
Monitor Sequence	None
Sensors OK	
Monitoring Duration	0.5 to 5 seconds for electrical checks, 10 solenoid events for functional check

ED_002078G_00001322-00237

Typical Shift Solenoid ISIG functional check entry conditions:		
Entry Conditions	Minimum	Maximum
Transmission Fluid Temp	70 °F	225 °F
Throttle position	positive drive torque (actual TP varies)	

Typical Shift Solenoid mechanical functional check entry conditions:		
Entry Conditions (with turbine speed)	Minimum	Maximum
Gear ratio calculated	each gear	
Throttle position	positive drive torque	

Typical Shift Solenoid mechanical functional check entry conditions:		
Entry Conditions (without turbine speed)	Minimum	Maximum
Rpm drop is obtained	each shift	
Throttle position	positive drive torque	

Typical Shift Solenoid malfunction thresholds:
Electrical circuit check: Output driver feedback circuit does not match commanded driver state for 0.5 – 5.0 seconds Electrical current check: Feedback current out of range for 0.5 seconds ISIG functional check: ISIG chip hardware circuit does not detect characteristic current dip and rise produced by solenoid movement. Mechanical functional check: Actual obtained gear or shift pattern indicates which shift solenoid is stuck on or off.

Gear Ratio Check Operation:	
DTCs	P0731 incorrect gear 1 ratio P0732 incorrect gear 2 ratio P0733 incorrect gear 3 ratio P0734 incorrect gear 4 ratio P0735 incorrect gear 5 ratio P0729 incorrect gear 6 ratio P0736 incorrect reverse ratio
Monitor execution	Continuous, in each gear
Monitor Sequence	None
Sensors OK	TSS, OSS, wheel speed
Monitoring Duration	12 seconds

Typical Forward Gear Ratio check entry conditions:		
Entry Conditions	Minimum	Maximum
Gear selector position	forward range, > 8 seconds	
Engine Torque	100 NM	
Throttle position	10%	
Not shifting	> 0.5 seconds	
Engine/input Speed	550 rpm	
Output Shaft Speed	250 rpm	1350 rpm

Typical Neutral Gear Ratio check entry conditions:		
Entry Conditions	Minimum	Maximum
Gear selector position	forward range, > 1 second	
Absolute value of Engine rpm – Turbine rpm		150 rpm
Output Shaft Speed		500 rpm

Typical Gear Ratio malfunction thresholds:
Forward gear check: > 30 error in commanded ratio for > 1.8 seconds that repeats 3 times

Torque Converter Clutch Check Operation:	
DTCs	P0740 – open circuit P0742 – short to ground P0744 – short to power P0741 – functionally stuck off P2758 – functionally stuck on P1740 – Inductive signature (4R70 only, replaces P0741 / P2758)
Monitor execution	electrical - continuous, mechanical - during lockup
Monitor Sequence	None
Sensors OK	TSS, OSS
Monitoring Duration	Electrical – 5 seconds, Functional - 5 lock-up events

Typical TCC ISIG functional check entry conditions:		
Entry Conditions	Minimum	Maximum
Transmission Fluid Temp	70 °F	225 °F
Engine Torque	positive drive torque	
Commanded TCC duty cycle for 0 rpm slip	60%	90%

Typical TCC mechanical functional check stuck off entry conditions:		
Entry Conditions	Minimum	Maximum
Throttle Position	steady	
Engine Torque	positive drive torque	
Transmission Fluid Temp	70 °F	225 °F
Commanded TCC duty cycle (0 rpm slip)	60%	100%
Not shifting		

Typical TCC malfunction thresholds:
Electrical circuit check: Output driver feedback circuit does not match commanded driver state for 0.5 – 5.0 seconds Electrical current check: Feedback current out of range for 0.5 seconds ISIG functional check: ISIG chip hardware circuit does not detect characteristic current dip and rise produced by solenoid movement. Mechanical check, stuck off: Slip across torque converter > 100 – 200 rpm or speed ratio < 0.93 Mechanical check, stuck on: Slip across torque converter < 20 rpm with converter commanded off Mechanical check, stuck on: engine rpm < 100 after drive engagement (engine stall)

Pressure Control Solenoid Check Operation:	
DTCs	P0960 – open circuit P0962 – short to ground P0963 – short to power
Monitor execution	Continuous
Monitor Sequence	none
Sensors OK	
Monitoring Duration	Electrical: 5 seconds, Mechanical functional: up to 30 seconds

Typical Pressure Control Solenoid mechanical functional check entry conditions:		
Entry Conditions	Minimum	Maximum
Gear ratio calculated	each gear	
Transmission Fluid Temperature	70 °F	225 °F
Throttle Position	positive drive torque	

Typical Pressure Control Solenoid malfunction thresholds:
Electrical circuit check: Output driver feedback circuit does not match commanded driver state for 0.5 – 5.0 seconds Electrical current check: Feedback current out of range for 0.5 seconds Mechanical functional check: Actual obtained gear pattern indicates Pressure Control solenoid fault

Inductive Signature Chip Communication Check Operation:	
DTCs	P1636 ISIG chip loss of communication
Monitor execution	off-to-on solenoid transitions
Monitor Sequence	none
Sensors OK	
Monitoring Duration	< 100 solenoid events

Typical Inductive Signature Chip Communication Check entry conditions:		
Entry Conditions	Minimum	Maximum
Transmission Fluid Temp	70 °F	225 °F
Solenoid commanded off duration		< 2 seconds

Typical Inductive Signature Communication Chip malfunction thresholds:
Checksum error, chip not responding

ED_002078G_00001322-00242

4R75E is the replacement for the 4R70W. The 4R75E transmission is essentially a 4R70W with a Turbine Speed Sensor (TSS)

Transmission Inputs

The Digital Transmission Range (DTR) sensor provides a single analog and three digital inputs to the PCM. The PCM decodes the inputs to determine the driver-selected gear position (Park, Rev, Neutral, OD, 2, 1). This input device is checked for opens and invalid input patterns. (P0708 P0705)

The Vehicle Speed Sensor (VSS), Output Shaft Speed (OSS) sensor, and Turbine Speed Sensor (TSS) if equipped, are inputs that are checked for rationality. If the engine rpm is above the torque converter stall speed and engine load is high, it can be inferred that the vehicle must be moving. If there is insufficient output from the VSS sensor, a malfunction is indicated (P0500). If there is insufficient output from the OSS sensor, a malfunction is indicated (P0720). If there is insufficient output from the TSS sensor, a malfunction is indicated (P0715).

Transmission Outputs

Shift Solenoids

The Shift Solenoid (SSA and SSB) output circuits are checked for opens and shorts by the PCM by monitoring the status of a feedback circuit from the output driver (P0750 SSA, P0755 SSB).

All vehicle applications will utilize an inductive signature circuit to monitor the shift solenoids functionally. The ISIG circuit monitors the current signature of the shift solenoid as the solenoid is commanded on. A solenoid that functions properly will show a characteristic decrease in current as the solenoid starts to move. If the solenoid is malfunctioning, the current will not change (P1714 SSA, P1715 SSB). The lack of communication between the ISIG chip and the PCM microprocessor is also monitored (P1636).

Torque Converter Clutch

The Torque Converter Clutch (TCC) output circuit is a duty-cycled output that is checked electrically for opens and shorts by the PCM by monitoring the status of a feedback circuit from the output driver (P0743).

All vehicle applications will utilize an inductive signature circuit to monitor the torque converter clutch. The ISIG circuit monitors the current signature of the TCC solenoid as the solenoid is commanded on. A solenoid that functions properly will show a characteristic decrease in current as the solenoid starts to move. If the solenoid is malfunctioning, the current will not change (P1740). In some applications, the ISIG test is run in conjunction with the other transmission functional tests. The lack of communication between the ISIG chip and the PCM microprocessor is also monitored (P1636).

Electronic Pressure Control

The EPC solenoid is a variable force solenoid that controls line pressure in the transmission. The EPC solenoid has a feedback circuit in the PCM that monitors EPC current. If the current indicates a short to ground (low pressure), engine torque may be reduced to prevent damage to the transmission. (P0962, PCA)

Transmission Inputs

Transmission Range Sensor

The Non-contacting Pulse Width Modulated Transmission Range Sensor (TRS) provides a duty cycle signal for each position. This signal is transmitted at a frequency of 125 Hz. The PCM decodes the duty cycle to determine the driver-selected gear position (Park, Rev, Neutral, OD, 3, 2, 1). This input device is checked for out of range frequency, low duty cycle and high duty cycle input signals. (P0706, P0707, P0708)

Speed Sensors

The Turbine Shaft Speed (TSS) sensor, Intermediate Shaft Speed (ISS) sensor and Output Shaft Speed (OSS) sensor, if equipped, are hall effect inputs that are checked for rationality. The vehicle speed signal is provided from the ABS system to the PCM. If the engine rpm is above the torque converter stall speed and engine load is high, it can be inferred that the vehicle must be moving. If there is insufficient output from the VSS sensor, a malfunction is indicated (P0500). If there is insufficient output from the TSS sensor, a malfunction is indicated (P0715). If there is insufficient output from the ISS sensor, a malfunction is indicated (P0791). If there is insufficient output from the OSS sensor, a malfunction is indicated (P0720).

Transmission Fluid Temperature

5R110W has a feature called "Cold mode". If TFT is below 0 deg F, the transmission will limit operation to 1st, 2nd, 3rd, and 4th gears (5th and 6th gears are disabled). Cold mode remains in effect until TFT rises above 0 deg F or vehicle operation (based on shift times or heat generated by driving) indicates that TFT should not be in the cold mode range, at which point normal operation is enabled.

Direct clutch apply times cold have forced the addition of this cold mode (DC takes excessive times to apply below –10 deg F), and require revisions to TFT failure management – if TFT is failed at start up the transmission will be placed in cold mode and remain there until TFT is no longer failed and above 0 deg F or the vehicle operating conditions listed above trigger an exit from cold mode.

Once out of cold mode a TFT failure will not trigger cold mode (can only go into cold mode once/power-up); but this mode is new to 5R110W.

TFT is monitored for circuit faults (P0712, P0713) and in-range failures (P0711)

For this reason all TFT diagnostics illuminate the MIL on 5R110W.

Transmission Outputs

Shift Solenoids

The Shift Solenoid (SSA, SSB, SSC, SSD, and SSE) output circuits are checked for opens and shorts by the PCM by monitoring the status of a feedback circuit from the output driver (SSA P0750, P0973, P0974; SSB P0755, P0976, P0977; SSC P0760, P0979, P0980; SSD P0765, P0982, P0983; SSE P0770, P0985, P0986).

The shift solenoids will be tested for function. This is determined by vehicle inputs such as gear command, and gear. Shift solenoid malfunction codes actually cover the entire clutch system (using ratio there is no way to isolate the solenoid from the rest of the clutch system. Diagnostics will isolate the fault into clutch functionally (non-electrical) failed off (SSA P0751, SSB P0756, SSC P0761, SSD P0766, SSE P0771) and clutch functionally failed on (SSA: P0752, SSB: P0757, SSC: P0762, SSD: P0767, SSE: P0772). These fault codes replace the P2700 level clutch fault codes previously used since the additional information of the failed state of the clutch adds value for service.

Torque Converter Clutch

The Torque Converter Clutch (TCC) output circuit is a duty-cycled output that is checked electrically for opens and shorts internally in the PCM by monitoring the status of a feedback circuit from the output driver (P0740, P0742, P0744).

The TCC solenoid is checked functionally by evaluating torque converter slip under steady state conditions when the torque converter is fully applied. If the slip exceeds the malfunction thresholds when the TCC is commanded on, a TCC malfunction is indicated (P0741).

Electronic Pressure Control

The EPC solenoid is a variable force solenoid that controls line pressure in the transmission. The EPC solenoid has a feedback circuit in the PCM that monitors EPC current. If the current indicates a short to ground (low pressure), a high side switch will be opened. This switch removes power from all 7 VFSs, providing Park, Reverse, Neutral, and 5M (in all forward ranges) with maximum line pressure based on manual lever position. This solenoid is tested for open (P0960), short to ground (P0962), and short to power (P0963) malfunctions.

High Side Switch

5R110W has a high side switch that can be used to remove power from all 7 VFSs simultaneously. If the high side switch is opened, all 7 solenoids will be electrically off, providing Park, Reverse, Neutral, and 5M (in all forward ranges) with maximum line pressure based on manual lever position. The switch is tested for open faults (switch failed closed will provide normal control). If the switch fails, a P0657 fault code will be stored.

CAN Communications error

The TCM receives critical information from the ECM via CAN. If the CAN link fails, the TCM no longer has torque or engine speed information available – the high side switch will be opened. The TCM will store a U0100 fault code if unable to communicate with the TCM.

Requirements for Heavy-Duty Engine Testing

Beginning in 2005, Ford is introducing a new TorqShift (5R110W) transmission for all HDGE automatic transmission applications. This new transmission uses direct electronic shift control technology (DESC) to actuate transmission mechanisms to achieve the desired gear changes. The DESC architecture requires more extensive monitoring within the PCM of transmission components, speeds, and gear ratios to ensure that the transmission is operating within expected ranges. Without the transmission hardware present during engine dyno testing, the transmission diagnostics will presume a transmission/sensor failure, and default to self-protective operating mode. As in past years, this requires special test procedures to be used during HDGE testing to assure a representative test by simulating key signals typically generated from the transmission system. The methodology used to generate these signals has been modified for the 2005MY.

For dynamometer testing on engines using this new transmission, the function of the previously used simulator box is now incorporated as part of the transmission OBD code included in the power-train control module (PCM). The new simulator strategy expands on the old strategy and uses engine rpm, commanded gear, and manual lever position to model transmission control system responses, e.g. representative, scheduled shift points and torque modulation during shifts. The PCM will enter this 'dyno cert' mode if, at start up, the transmission OBD senses that the seven transmission variable force solenoids, the turbine speed sensor, the intermediate speed sensor, and the output speed sensor are all absent. In this mode, transmission diagnostics are disabled, a MIL code is set, and the PCM generates simulated signals that typically come from the transmission.

During the running of the transient dyno cycle, the engine follows a set path of normalized engine rpm and normalized torque as prescribed in the regulations. This simulator strategy allows the engine to perform this cycle, with the PCM reacting as if the transmission were present and the vehicle were operating on the road, resulting in representative shift events and torque modulation. These shift events follow the calibrated shift schedule, but require the input of specific transmission signals. These signals include Turbine Shaft Speed (TSS), Intermediate Shaft Speed (ISS), Output Shaft Speed (OSS), and Vehicle Speed (VSS). Since there is no transmission

ED_002078G_00001322-00245

hardware, these signals must be simulated. The model for the simulation strategy is based on fixed mechanical gear ratios of the transmission, scheduled shift points; small losses of efficiency in the torque converter, and approximations of transmission characteristics during transition periods (i.e. shift transition between 1st & 2nd gears). Simulated characteristics during shifts are based on extensive experience with real world transmission and vehicle operation. The initial inputs to the simulator are engine speed and transmission lever position (e.g. park, drive), these signals determine the status of the Torque Converter Clutch, and in turn output the TSS. In park, TSS equals engine rpm. In drive with the engine speed less than an approximate engine speed of 1000 rpm, the TSS equal zero. As the engine accelerates (or decelerates), the model ramps the TSS signal to respond as closely as possible to the way the turbine shaft would respond on the road. The TSS in turn, along with the status of the overdrive gear set, is used to generate the ISS. This is based on the commanded gear, and fixed gear ratios. During shift events, the model ramps the ISS signal between gear ratios. Likewise, ISS is then used, with the status of the simpson gear set, to generate the OSS, based on the fixed gear ratios. OSS is in turn used by the PCM to establish commanded gear. VSS is calculated from the OSS, using tire size and axle ratio. VSS is used within the PCM for vehicle speed limiting and as an entry condition to some of the engine on-board diagnostics.

The goal of this new 'simulator' strategy is to ensure proper function of the PCM without transmission hardware. Only the transmission OBD recognizes that the engine is in 'dyno cert' mode, the rest of the transmission control systems react as if the transmission hardware is present and is running normally as it would on the road.

ED_002078G_00001322-00246

6R80 (RWD) Transmission with external PCM or TCM

Transmission Control System Architecture

Starting in 2010.5 MY 6R80 is transitioning from an internal TCM to an external PCM (gas applications) or TCM (Diesel applications). Main hardware differences:

- Transmission Range Sensor still 4 bit digital, but the transmission bulkhead connector could not accommodate 4 pins so a micro processor was added to the sensor. This processor converts the 4 bit digital signal into a Pulse Width Modulated (PWM) 125 Hz signal.

- Module temperature sensor has been deleted.

The 6R80 is a 6-speed, step ratio transmission that is controlled by an external PCM (gas engine applications) or TCM (Diesel engine applications). For Diesel the TCM communicates to the Engine Control Module (ECM), ABS Module, Instrument Cluster and Transfer Case Control Module using the high speed CAN communication link. The TCM incorporates a standalone OBD-II system. The TCM independently processes and stores fault codes, freeze frame, supports industry-standard PIDs as well as J1979 Mode 09 CALID and CVN. The TCM does not directly illuminate the MIL, but requests the ECM to do so. The TCM is located outside the transmission assembly. It is not serviceable with the exception of reprogramming.

Transmission Inputs

Transmission Range Sensor

Due to transmission bulkhead connector issues the 4 bit digital TRS used by 6R80 with an internal TCM has been revised. The sensor now contains a micro processor that converts the 4 bit digital signal from into a Pulse Width Modulated (PWM) 125 Hz signal that is then output to the PCM. The sensor outputs a specific duty cycle for each bit pattern, including the invalid bit patterns. TRS is tested for invalid bit pattern (P0705 – inferred by the PCM thru the duty cycle), frequency out of range (P0706), duty cycle out of range low (P0707), duty cycle out of range high (P0708).

Speed Sensors

The Turbine Shaft Speed (TSS) sensor and Output Shaft Speed (OSS) sensor are Hall effect sensors.

The Turbine Shaft Speed sensor is monitored for circuit faults and rationality (P0715, P0717). If turbine shaft speed exceeds a maximum calibrated speed (7,700 rpm), a fault is stored (P0716). If engine speed and output shaft speed are high and a gear is engaged, it can be inferred that the vehicle is moving. If there is insufficient output from the TSS sensor a fault is stored (P0716).

The Output Shaft Speed sensor is monitored for circuit faults and rationality (P0720, P0722). If output shaft speed exceeds a maximum calibrated speed (7,450 rpm), a fault is stored (P0721). If output shaft speed does not correlate with turbine shaft speed and wheel speed while a gear is engaged and the vehicle is moving, a fault is stored (P0721). If the output shaft speed decreases at an erratic/unreasonable rate, a fault is stored (P0723).

Transmission Fluid Temperature

The Transmission Fluid Temperature Sensor is checked for open circuit, short circuit to ground, short circuit to power, and in-range failures (P0711, P0712, P0713, P0714). In-range TFT (P0711) is now the Ford standard diagnostic – the internal TCM temperature sensor is no longer available to diagnose TFT failures.

Transmission Outputs

Shift Solenoids

6R80 has 5 shift solenoids:

1. SSA – a Variable Force Solenoid (VFS) that controls CB1234 (a brake clutch, grounds an element to the case, that is on in 1st, 2nd, 3rd and 4th gear)

2. SSB – a VFS that controls C35R (a rotating clutch on in 3rd, 5th and Reverse)

3. SSC – a VFS that controls CB26 (a brake clutch on in 2nd and 6th gear)

4. SSD – a VFS that controls either CBLR (a brake clutch on in 1st gear with engine braking and Reverse) or C456 (a rotating clutch on in 4th, 5th and 6th gear)

5. SSE – an On/Off solenoid that controls the multiplexing of SSD between CBLR and C456.

Output circuits are checked for opens, short to ground and short to power faults (codes listed in that order) by the PCM by monitoring the status of a feedback circuit from the output driver (SSA P0750, P0973, P0974; SSB P0755, P0976, P0977; SSC P0760, P0979, P0980; SSD P0765, P0982, P0983; SSE P0770).

The shift solenoids are also functional tested for stuck on and stuck off failures. This is determined by vehicle inputs such as gear command, and achieved gear (based on turbine and output speed). In general the shift solenoid malfunction codes actually cover the entire clutch system (solenoid, valves, and the clutch itself) since using ratio there is no way to isolate the solenoid from the rest of the clutch system

For SSA thru SSD Diagnostics will isolate the fault into clutch functionally (non-electrical) failed off (SSA P0751, SSB P0756, SSC P0761, SSD P0766) and clutch functionally failed on (SSA: P0752, SSB: P0757, SSC: P0762, SSD: P0767). The On/Off solenoid (SSE) controls the multiplexing of SSD between CBLR and C456 clutches. Using ratio we can determine if the multiplex valve is in the wrong position, but cannot be sure if the failure is due to the solenoid or a stuck valve. The multiplex valve is tested for stuck in default position (P0771, includes SSE stuck off) and stuck in spring compressed position (P0772, includes SSE stuck on) failures.

Gear ratio errors:

If ratio errors are detected that do not match an expected pattern for a failed solenoid then gear ratio error fault codes (1st gear – P0731, 2nd gear – P0732, 3rd gear – P0733, 4th gear – P0734, 5th gear – P0735 or 6th gear – P0729) will be stored.

ED_002078G_00001322-00248

Torque Converter Clutch

The Torque Converter Clutch (TCC) Solenoid output circuit is a duty-cycled output that is checked electrically for open circuit, short circuit to ground, and short circuit to power by monitoring the status of a feedback circuit from the output driver (P0740, P2763, P2764). If the TCC pressure is high and the engine torque is low, the TCC should be fully applied or have a controlled amount of slippage. If the slip exceeds a threshold, a fault is stored (P0741).

Pressure Control

The Pressure Control solenoid is a variable force solenoid that controls line pressure in the transmission. The Pressure Control solenoid output circuit is a duty-cycled output that is checked electrically for short circuit to ground or short circuit to battery by monitoring the status of a feedback circuit from the output driver (P0962, P0963).

Note that the Pressure Control Solenoid failures P0960 and P0963 do not illuminate the MIL because the diagnostic action (maximum line pressure) does not affect emissions.

High Side Actuator Control Circuit

The TCM has a high side actuator supply control circuit that can be used to remove power from all 7 solenoids and the external Reverse Light Relay simultaneously. If the high side actuator control circuit is deactivated, all 7 solenoids and the external Reverse Light Relay will be electrically turned off, providing Park, Reverse, Neutral, and 3M/5M (in all forward ranges) with maximum line pressure, based on the selected transmission range. The actuator control circuit is tested for open circuits. (P0657).

ADLER (chip that controls all 7 solenoids) diagnostics:

The solenoids are controlled by an ADLER chip. The main micro sends commanded solenoid states to the ADLER, and receives back solenoid circuit fault information.

If communication with the ADLER is lost a P1636 fault code will be stored. If this failure is detected the states of the solenoids are unknown, so the control system will open the high side switch (removes power from all the solenoids), providing P, R, N and 5M with open TCC and max line pressure.

TRID Block

The TRID block is a portion of flash memory that contains solenoid characterization data tailored to the specific transmission to improve pressure accuracy.

The TRID block is monitored for two failures:

a) TRID block checksum error / incorrect version of the TRID (P163E)

b) TRID block not programmed (P163F)

If the TRID block is unavailable FMEM action limits operation to 1st and 3rd gear until the issue is correct.

ED_002078G_00001322-00249

Transmission Control Module (TCM – Diesel only)

The TCM has the same module diagnostics as a PCM – see miscellaneous CPU tests.

CAN Communications Error

The TCM receives information from the ECM via the high speed CAN network. If the CAN link or network fails, the TCM no longer has torque or engine speed information available. The TCM will store a U0073 fault code and will illuminate the MIL immediately (missing engine speed) if the CAN Bus is off. The TCM will store a U0100 fault code and will illuminate the MIL immediately (missing engine speed) if it stops receiving CAN messages from the ECM. A U0401 fault codes will be stored if the ECM sends invalid/faulted information for the following CAN message items: engine torque, pedal position.

TCM voltage

If the system voltage at the TCM is outside of the specified 9 to 16 volt range, a fault will be stored (P0882, P0883).

Transmission Inputs

Transmission Range Sensor

The 6F Digital Transmission Range (DTR) sensor provides four digital inputs to the PCM. Unlike the Ford standard digital TRS that has 1 analog and 3 digital inputs, this sensor uses 4 digital inputs, and all switches open (sensor disconnect) is an invalid bit pattern. The PCM decodes these inputs to determine the driver-selected gear position (Park, Rev, Neutral, OD, Low). This input device is checked for all switches open (P0708), invalid input patterns (P0705), and a stuck in transition zone between valid positions (P0706).

Select Shift Transmission (SST) Up/Down

6F is picking up SST for 09 MY. This system has two new PCM inputs, an upshift switch and a downshift switch. The switches are built into the shifter (defined as an H-gate in this implementation):

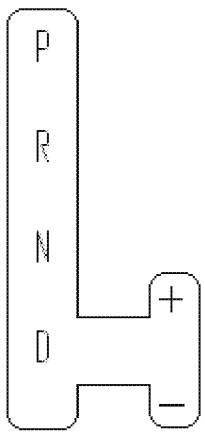

Both PCM inputs are open when the shifter is on the left hand side. From Drive as the customer moves the shifter to the right both inputs transition from open to closed (the TRS continues to indicate Drive). The control system enters "Grade Assist Mode" (provides more engine braking but still follows an automatic shift schedule) at this point. If the customer never requests a shift the control system will remain in Grade Assist Mode.

The customer requests a shift by pushing the shifter up or down, which opens the appropriate switch. Once the customer requests a shift the control system transitions from Grade Assist Mode to SST. In SST the control system follows the customer's commands except for special conditions (downshifts to the lowest available gear at high pedal, downshifts at low speeds).

Diagnostics monitors for either switch closed in Park, Reverse or Neutral, and a failure will result in non-MIL P0815 (upshift switch error) or P0816 (downshift switch error) fault codes.

If either switch fails open the customer will not be able to enter Grade Mode or SST since both switches must transition from open to closed while in the Drive position to enter SST.

If either switch is detected failed Grade Assist Mode and SST are disabled and the control system defaults to Drive (normal automatic shift schedules).

ED_002078G_00001322-00251

Speed Sensors

The Turbine Shaft Speed (TSS) sensor and Output Shaft Speed (OSS) sensor are Hall Effect inputs that are checked for rationality. The vehicle speed signal is provided from the ABS system (if present) to the PCM, or is derived from OSS. If the engine rpm is above the torque converter stall speed and engine load is high, it can be inferred that the vehicle must be moving. If there is insufficient output from the VSS sensor (if present), a malfunction is indicated (P0500). If there is insufficient output from the TSS sensor, a malfunction is indicated (P0715). If there is insufficient output from the OSS sensor, a malfunction is indicated (P0720).

Transmission Fluid Temperature

6F has a feature called "Cold mode" (1st implemented in 5R110W in 2003 MY). If TFT is below -20 deg F, the transmission will limit operation to 1st, 2nd, 3rd, and 4th gears (5th and 6th gears are disabled). Cold mode remains in effect until TFT rises above -20 deg F or vehicle operation (based on shift times or heat generated by driving) indicates that TFT should not be in the cold mode range, at which point normal operation is enabled.

if TFT is failed at start up the transmission will be placed in cold mode and remain there until TFT is no longer failed and above -20 deg F or the vehicle operating conditions listed above trigger an exit from cold mode.

Once out of cold mode a TFT failure will not trigger cold mode (can only go into cold mode once/power-up); this mode is the same as implemented on 5R110W in 2003.5 MY.

TFT is monitored for circuit faults (P0712, P0713) and in-range failures (P0711)

For this reason all TFT diagnostics illuminate the MIL on 6F.

Transmission Outputs

Shift Solenoids

6F has 5 shift solenoids:

- SSA – a Variable Force Solenoid (VFS) that controls CB1234 (a brake clutch, grounds an element to the case, that is on in 1st, 2nd, 3rd and 4th gear)
- SSB – a VFS that controls C35R (a rotating clutch on in 3rd, 5th and Reverse)
- SSC – a VFS that controls CB26 (a brake clutch on in 2nd and 6th gear)
- SSD – a VFS that controls either CBLR (a brake clutch on in 1st gear with engine braking and Reverse) or C456 (a rotating clutch on in 4th, 5th and 6th gear)
- SSE – an On/Off solenoid that controls the multiplexing of SSD between CBLR and C456.

Output circuits are checked for opens, short to ground and short to power faults (codes listed in that order) by the PCM by monitoring the status of a feedback circuit from the output driver (SSA P0750, P0973, P0974; SSB P0755, P0976, P0977; SSC P0760, P0979, P0980; SSD P0765, P0982, P0983; SSE P0770).

The shift solenoids are also functional tested for stuck on and stuck off failures. This is determined by vehicle inputs such as gear command, and achieved gear (based on turbine and output speed). In general the shift solenoid malfunction codes actually cover the entire clutch system (solenoid, valves, and the clutch itself since using ratio there is no way to isolate the solenoid from the rest of the clutch system), BUT due to the hydraulic controls arrangement on 6F it is possible to isolate two specific solenoid failures from clutch system faults:

a) SSB stuck on from C35R stuck on - due to hydraulic interlock between CBLR and C35R we can isolate SSB stuck on from C35R by turning SSE on in 1st gear without engine braking (get 1st if SSB stuck on, get 3rd if C35R is stuck on)

b) SSD stuck off. Since SSD is multiplexed (controls both CBLR and C456) we can isolate CBLR stuck off and C456 stuck off from SSD stuck off since the latter impacts both clutch systems.

For SSA thru SSD Diagnostics will isolate the fault into clutch functionally (non-electrical) failed off (SSA P0751, SSB P0756, SSC P0761, SSD P0766) and clutch functionally failed on (SSA: P0752, SSB: P0757, SSC: P0762, SSD: P0767). The On/Off solenoid (SSE) controls the multiplexing of SSD between CBLR and C456 clutches. Using ratio we can determine if the multiplex valve is in the wrong position, but cannot be sure if the failure is due to the solenoid or a stuck valve. The multiplex valve is tested for stuck in default position (P0771, includes SSE stuck off) and stuck in spring compressed position (P0772, includes SSE stuck on) failures.

Torque Converter Clutch

The Torque Converter Clutch (TCC) solenoid is a Variable Force Solenoid. TCC solenoid circuit is checked electrically for open, short to ground and short to power circuit faults internally in the PCM by monitoring the status of a feedback circuit from the output driver (P0740, P0742, P0744).

The TCC solenoid is checked functionally by evaluating torque converter slip under steady state conditions when the torque converter is fully applied. If the slip exceeds the malfunction thresholds when the TCC is commanded on, a TCC malfunction is indicated (P0741).

For 6F the TCC is controlled by a 2 valve system - TCC reg apply and TCC control valve. Normally the TCC VFS controls the positions of these valves - turning on the TCC VFS moves both valves from the release to the apply position. If the TCC control valve sticks in the apply position then there will be no flow thru the TCC (both apply and release sides exhausted) when commanded open, which will cause the converter to overheat.

A method to detect this failure was designed into the hardware - SSE pressure is routed to the TCC reg apply valve (SSE has no effect on TCC control valve). In 3rd gear or higher if TCC is open SSE can be turned on, moving the TCC reg apply valve to the apply position. If the TCC control valve is in the wrong (apply) position this will cause the TCC to apply. If the TCC applies when SSE is turned on in 3rd, 4th, 5th or 6th gear while TCC is commanded open (TCC VFS pressure low) the failure will be detected, a P2783 DTC fault code stored. Even though this test only detects failures of the control valve, the FMEM actions alter the shift and TCC lock schedules to keep the TCC applied as much as possible, so this failure has been made MIL.

Electronic Pressure Control

The EPC solenoid is a variable force solenoid that controls line pressure in the transmission. The EPC solenoid has a feedback circuit in the PCM that monitors EPC current. If the current indicates a short to ground (low pressure), a high side switch will be opened. This switch removes power from all 6 VFSs and the on/off shift solenoid, providing Park, Reverse, Neutral, and 5M (in all forward ranges) with maximum line pressure based on manual lever position. This solenoid is tested for open (P0960), short to ground (P0962), and short to power (P0963) malfunctions.

High Side Switch

6F has a high side switch that can be used to remove power from all 7 solenoids simultaneously. If the high side switch is opened, all 7 solenoids will be electrically off, providing Park, Reverse, Neutral, and 5M (in all forward ranges) with maximum line pressure based on manual lever position. The switch is tested for open faults (switch failed closed will provide normal control). If the switch fails, a P0657 fault code will be stored.

ADLER (chip that controls all 7 solenoids) diagnostics:

The solenoids are controlled by an ADLER chip. The main micro sends commanded solenoid states to the ADLER, and receives back solenoid circuit fault information.

ED_002078G_00001322-00253

If communication with the ADLER is lost a P1636 fault code will be stored. If this failure is detected the states of the solenoids are unknown, so the control system will open the high side switch (removes power from all the solenoids), providing P, R, N and 5M with open TCC and max line pressure.

TRID Block

The TRID block is a portion of flash memory that contains solenoid characterization data tailored to the specific transmission to improve pressure accuracy.

The TRID block is monitored for two failures:

- TRID block checksum error / incorrect version of the TRID (P163E)
- TRID block not programmed (P163F)

If the TRID block is unavailable FMEM action limits operation to 1st and 3rd gear until the issue is correct.

ED_002078G_00001322-00254

Transmission Inputs

Transmission Range Sensor – 6F35 uses a Non-contacting Pulse Width Modulated Transmission Range Sensor (TRS) that provides a duty cycle signal for each position. This signal is transmitted at a frequency of 125 Hz. The PCM decodes the duty cycle to determine the driver-selected gear position (Park, Rev, Neutral, OD, 3, 2, 1). This input device is checked for out of range frequency, low duty cycle and high duty cycle input signals. (P0706, P0707, P0708)

Select Shift Transmission (SST) Up/Down

6F35 is picking up SST for 10 MY. This system has two new PCM inputs, an upshift switch and a downshift switch. The switches are built into the shifter (defined as an H-gate in this implementation):

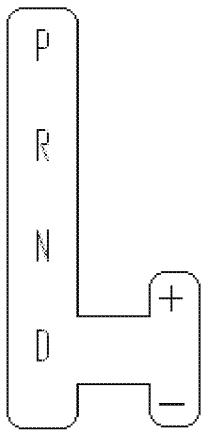

Both PCM inputs are open when the shifter is on the left hand side. From Drive as the customer moves the shifter to the right both inputs transition from open to closed (the TRS continues to indicate Drive). The control system enters "Grade Assist Mode" (provides more engine braking but still follows an automatic shift schedule) at this point. If the customer never requests a shift the control system will remain in Grade Assist Mode.

The customer requests a shift by pushing the shifter up or down, which opens the appropriate switch. Once the customer requests a shift the control system transitions from Grade Assist Mode to SST. In SST the control system follows the customer's commands except for special conditions (downshifts to the lowest available gear at high pedal, downshifts at low speeds).

Diagnostics monitors for either switch closed in Park, Reverse or Neutral, and a failure will result in non-MIL P0815 (upshift switch error) or P0816 (downshift switch error) fault codes.

If either switch fails open the customer will not be able to enter Grade Mode or SST since both switches must transition from open to closed while in the Drive position to enter SST.

If either switch is detected failed Grade Assist Mode and SST are disabled and the control system defaults to Drive (normal automatic shift schedules).

ED_002078G_00001322-00255

Speed Sensors

The Turbine Shaft Speed (TSS) sensor and Output Shaft Speed (OSS) sensor are Hall Effect inputs that are checked for rationality. The vehicle speed signal is provided from the ABS system (if present) to the PCM, or is derived from OSS. If the engine rpm is above the torque converter stall speed and engine load is high, it can be inferred that the vehicle must be moving. If there is insufficient output from the VSS sensor (if present), a malfunction is indicated (P0500). If there is insufficient output from the TSS sensor, a malfunction is indicated (P0715). If there is insufficient output from the OSS sensor, a malfunction is indicated (P0720).

Transmission Fluid Temperature

6F35 has a feature called "Cold mode" (1st implemented in 5R110W in 2003 MY). If TFT is below -20 deg F, the transmission will limit operation to 1st, 2nd, 3rd, and 4th gears (5th and 6th gears are disabled). Cold mode remains in effect until TFT rises above -20 deg F or vehicle operation (based on shift times or heat generated by driving) indicates that TFT should not be in the cold mode range, at which point normal operation is enabled.

if TFT is failed at start up the transmission will be placed in cold mode and remain there until TFT is no longer failed and above -20 deg F or the vehicle operating conditions listed above trigger an exit from cold mode.

Once out of cold mode a TFT failure will not trigger cold mode (can only go into cold mode once/power-up); this mode is the same as implemented on 5R110W in 2003.5 MY.

TFT is monitored for circuit faults (P0712, P0713) and in-range failures (P0711)

For this reason all TFT diagnostics illuminate the MIL on 6F35.

Transmission Outputs

Shift Solenoids

6F has 5 shift solenoids:

a. SSA – a Variable Force Solenoid (VFS) that controls CB1234 (a brake clutch, grounds an element to the case, that is on in 1st, 2nd, 3rd and 4th gear)

b. SSB – a VFS that controls C35R (a rotating clutch on in 3rd, 5th and Reverse)

c. SSC – a VFS that controls CB26 (a brake clutch on in 2nd and 6th gear)

d. SSD – a VFS that controls either CBLR (a brake clutch on in 1st gear with engine braking and Reverse) or C456 (a rotating clutch on in 4th, 5th and 6th gear)

e. SSE – an On/Off solenoid that controls the multiplexing of SSD between CBLR and C456.

Output circuits are checked for opens, short to ground and short to power faults (codes listed in that order) by the PCM by monitoring the status of a feedback circuit from the output driver (SSA P0750, P0973, P0974; SSB P0755, P0976, P0977; SSC P0760, P0979, P0980; SSD P0765, P0982, P0983; SSE P0770).

The shift solenoids are also functional tested for stuck on and stuck off failures. This is determined by vehicle inputs such as gear command, and achieved gear (based on turbine and output speed). In general the shift solenoid malfunction codes actually cover the entire clutch system (solenoid, valves, and the clutch itself since using ratio there is no way to isolate the solenoid from the rest of the clutch system), BUT due to the hydraulic controls arrangement on 6F it is possible to isolate two specific solenoid failures from clutch system faults:

1. SSB stuck on from C35R stuck on - due to hydraulic interlock between CBLR and C35R we can isolate SSB stuck on from C35R by turning SSE on in 1st gear without engine braking (get 1st if SSB stuck on, get 3rd if C35R is stuck on)

2. SSD stuck off. Since SSD is multiplexed (controls both CBLR and C456) we can isolate CBLR stuck off and C456 stuck off from SSD stuck off since the latter impacts both clutch systems.

For SSA thru SSD Diagnostics will isolate the fault into clutch functionally (non-electrical) failed off (SSA P0751, SSB P0756, SSC P0761, SSD P0766) and clutch functionally failed on (SSA: P0752, SSB: P0757, SSC: P0762, SSD: P0767). The On/Off solenoid (SSE) controls the multiplexing of SSD between CBLR and C456 clutches. Using ratio we can determine if the multiplex valve is in the wrong position, but cannot be sure if the failure is due to the solenoid or a stuck valve. The multiplex valve is tested for stuck in default position (P0771, includes SSE stuck off) and stuck in spring compressed position (P0772, includes SSE stuck on) failures.

Gear ratio errors:

If ratio errors are detected that do not match an expected pattern for a failed solenoid then gear ratio error fault codes (1st gear – P0731, 2nd gear – P0732, 3rd gear – P0733, 4th gear – P0734, 5th gear – P0735 or 6th gear – P0729) will be stored.

Torque Converter Clutch

The Torque Converter Clutch (TCC) solenoid is a Variable Force Solenoid. TCC solenoid circuit is checked electrically for open, short to ground and short to power circuit faults internally in the PCM by monitoring the status of a feedback circuit from the output driver (P0740, P0742, P0744).

The TCC solenoid is checked functionally by evaluating torque converter slip under steady state conditions when the torque converter is fully applied. If the slip exceeds the malfunction thresholds when the TCC is commanded on, a TCC malfunction is indicated (P0741).

For 6F35 the TCC is controlled by a 2 valve system - TCC reg apply and TCC control valve. Normally the TCC VFS controls the positions of these valves - turning on the TCC VFS moves both valves from the release to the apply position. If the TCC control valve sticks in the apply position then there will be no flow thru the TCC (both apply and release sides exhausted) when commanded open, which will cause the converter to overheat.

A method to detect this failure was designed into the hardware - SSE pressure is routed to the TCC reg apply valve (SSE has no effect on TCC control valve). In 3rd gear or higher if TCC is open SSE can be turned on, moving the TCC reg apply valve to the apply position. If the TCC control valve is in the wrong (apply) position this will cause the TCC to apply. If the TCC applies when SSE is turned on in 3rd, 4th, 5th or 6th gear while TCC is commanded open (TCC VFS pressure low) the failure will be detected, a P2783 DTC fault code stored. Even though this test only detects failures of the control valve, the FMEM actions alter the shift and TCC lock schedules to keep the TCC applied as much as possible, so this failure has been made MIL.

Electronic Pressure Control

The EPC solenoid is a variable force solenoid that controls line pressure in the transmission. The EPC solenoid has a feedback circuit in the PCM that monitors EPC current. If the current indicates a short to ground (low pressure), a high side switch will be opened. This switch removes power from all 6 VFSs and the on/off shift solenoid, providing Park, Reverse, Neutral, and 5M (in all forward ranges) with maximum line pressure based on manual lever position. This solenoid is tested for open (P0960), short to ground (P0962), and short to power (P0963) malfunctions.

High Side Switch

6F35 has a high side switch that can be used to remove power from all 7 solenoids simultaneously. If the high side switch is opened, all 7 solenoids will be electrically off, providing Park, Reverse, Neutral, and 5M (in all forward ranges) with maximum line pressure based on manual lever position. The switch is tested for open faults (switch failed closed will provide normal control). If the switch fails, a P0657 fault code will be stored.

ADLER (chip that controls all 7 solenoids) diagnostics:

The solenoids are controlled by an ADLER chip. The main micro sends commanded solenoid states to the ADLER, and receives back solenoid circuit fault information.

If communication with the ADLER is lost a P1636 fault code will be stored. If this failure is detected the states of the solenoids are unknown, so the control system will open the high side switch (removes power from all the solenoids), providing P, R, N and 5M with open TCC and max line pressure.

TRID Block

The TRID block is a portion of flash memory that contains solenoid characterization data tailored to the specific transmission to improve pressure accuracy.

The TRID block is monitored for two failures:

- TRID block checksum error / incorrect version of the TRID (P163E)
- TRID block not programmed (P163F)

If the TRID block is unavailable FMEM action limits operation to 1st and 3rd gear until the issue is correct.

Transmission Control Module (TCM only present on)

The TCM has the same module diagnostics as a PCM – see miscellaneous CPU tests.

CAN Communications Error

The TCM receives information from the ECM via the high speed CAN network. If the CAN link or network fails, the TCM no longer has torque or engine speed information available. The TCM will store a U0073 fault code and will illuminate the MIL immediately (missing engine speed) if the CAN Bus is off. The TCM will store a U0100 fault code and will illuminate the MIL immediately (missing engine speed) if it stops receiving CAN messages from the ECM. A U0401 fault codes will be stored if the ECM sends invalid/faulted information for the following CAN message items: engine torque, pedal position.

TCM voltage

If the system voltage at the TCM is outside of the specified 9 to 16 volt range, a fault will be stored (P0882, P0883).

Auxiliary Transmission Fluid Pump (Stop Start Applications)

For Stop Start applications, an Electronic Auxiliary Transmission Oil Pump (ePump) has been added to the transmission to allow clutches to stay engaged when the engine stops. The auxiliary pump is an electric external pump bolted to the transmission case. This allows quicker response on restarts since the transmission is ready before the main pump begins outputting pressure.

Transmission Fluid Auxiliary Pump Components

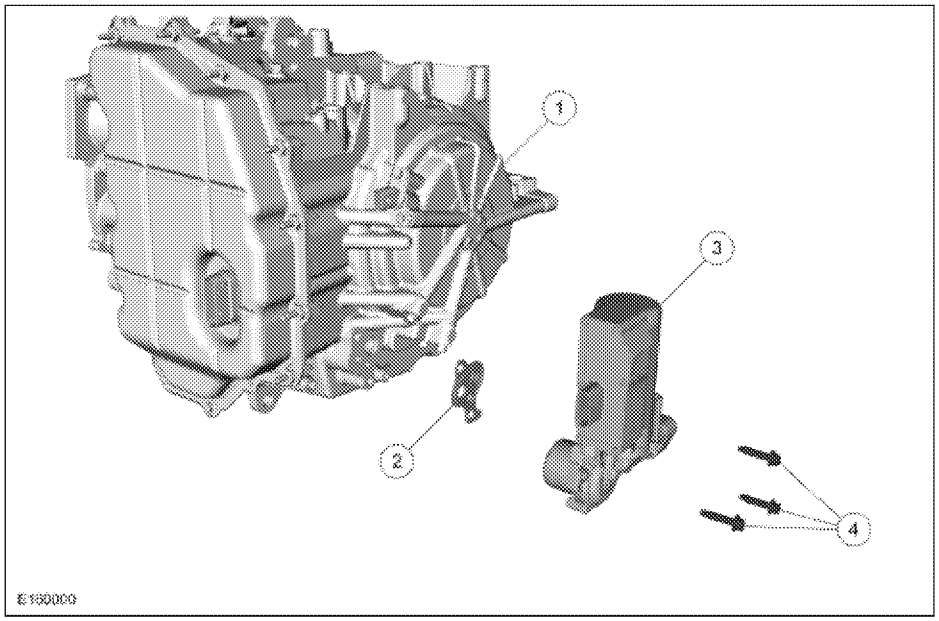

Item	Part Number	Description
1	7005	Transmission case
2	7A136	Transmission fluid auxiliary pump-to-transmission case gasket
3	7B086	Transmission fluid auxiliary pump
4	W715302	Transmission fluid auxiliary pump-to-transmission case bolt (3 required)

The Electronic Auxiliary Transmission Oil Pump is a “smart” device – the PCM or TCM communicates with the pump via 2 Pulse Width Modulated (PWM) hardwires:

- PCM or TCM outputs a commanded pump speed to the pump using a PWM signal:

Duty Cycle	RPM of motor
0-9.9%	Reserved for diagnostics
10-19.9	Off state
20-22.9	100 rpm (pre-shipment supplier test)
23-90%	937.14 rpm to 4,000 rpm (linear range of operation)
90.1-100%	Reserved for diagnostics

- The pump outputs the fault status of the pump to the PCM or TCM using a PWM signal. The fault status is used to stores the appropriate DTC in the PCM or TCM.

Duty Cycle	Indicated Operating Condition	DTC	Definition
0-10%	Out of range low	P0C2D	Electric Transmission Fluid Pump Control Module Feedback Signal Low
10-15%	Under Current, Correct Speed	P0C27	Electric/Auxiliary Transmission Fluid Pump "A" Motor Current Low
20-25%	Over Current, Correct Speed	P0C28	Electric/Auxiliary Transmission Fluid Pump "A" Motor Current High
30-34%	Over Temperature	P175A	Transmission Fluid Over Temperature Condition - Electric Transmission Fluid Pump Disabled
35-40%	Stalled	P0C2A	Electric/Auxiliary Transmission Fluid Pump "A" Motor Stalled
45-50%	Correct Current and Speed	n/a	
55-60%	Over Speed, Correct Current	P0B0D	Electric/Auxiliary Transmission Fluid Pump Motor Control Module
65-70%	Under Speed, Correct Current	P0B0D	Electric/Auxiliary Transmission Fluid Pump Motor Control Module
75-80%	Current and Speed out of Range	P0C29	Electric/Auxiliary Transmission Fluid Pump "A" Driver Circuit Performance
85-90%	No Command Signal Received from PCM	P2796	Electric Transmission Fluid Pump Control Circuit
90-100%	Out of range high	P0C2E	Electric Transmission Fluid Pump Control Module Feedback Signal High
Frequency out of range or duty cycle between valid ranges	Signal should be 120 Hz +/- 20 Hz. Should not see in-range but unused duty cycle values	P0C2C	Electric Transmission Fluid Pump Control Module Feedback Signal Range/Performance

Failures of the pump take the Stop Start system out of operation – if stopped the engine will restart, then will no longer stop for the remainder of the current drive cycle.

DPS6 (FWD) Transmission

DPS6 is a fully automatic 6 speed transmission made up of manual transmission gearing, combined with electro-mechanical actuators, and conventional automatic transmission controls.

The Gearbox & Dual-Clutch System Physical Architecture

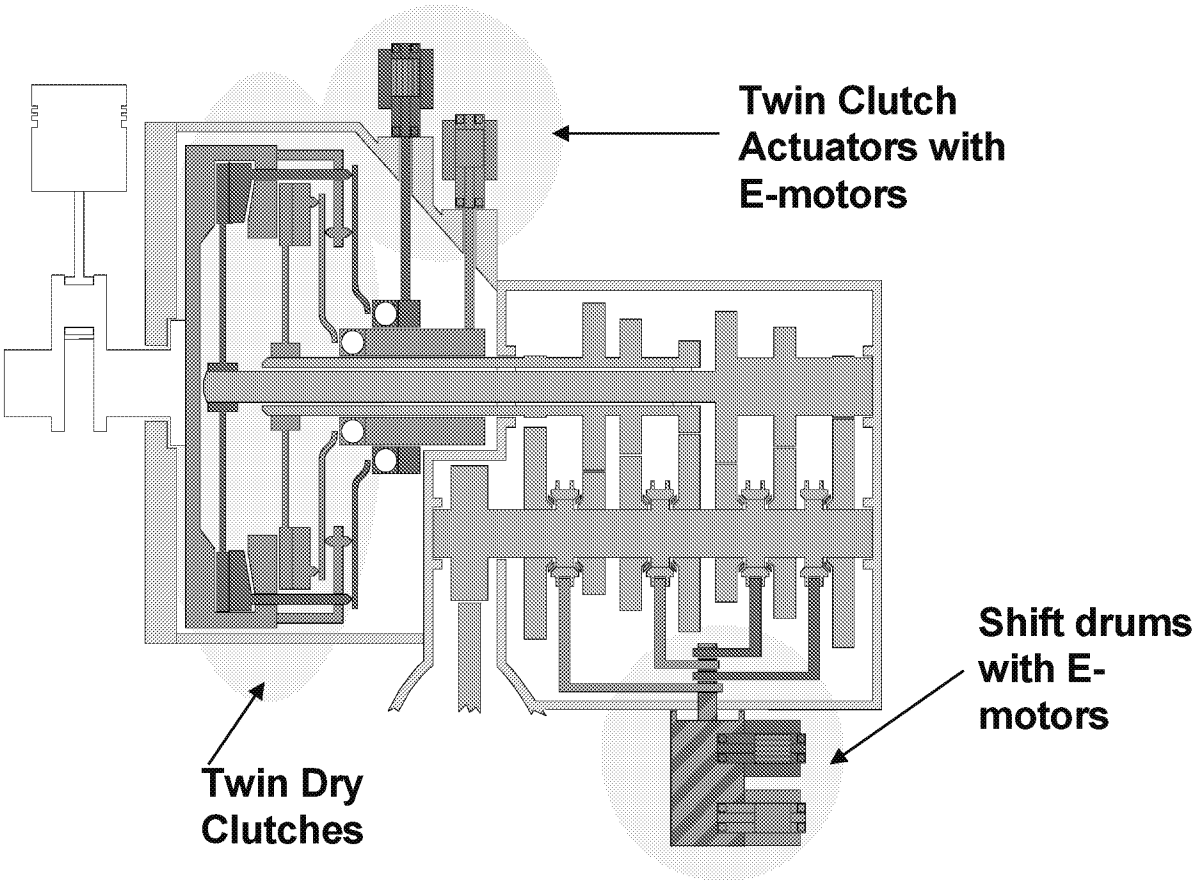

DPS6 has 2 clutches:

1. Clutch A – on in 1st, 3rd and 5th gear
2. Clutch B – on in Reverse, 2nd, 4th and 6th gear

Each clutch system consists of:

- Clutch
- 3 phase electric motor – rotates a screw driven fulcrum that controls clutch position (and torque). There are end stops at the full open and full closed positions
- Each motor phase has a hall position sensor that combine to provide a relative position – the system must sweep the clutch full open to full closed, then count increments on the sensors to know position. It takes many rotations of the motor to sweep the clutch from fully open to fully closed.
- Spring that returns the clutch to the full open position if the motor is turned off.

ED_002078G_00001322-00261

DPS6 has 2 shift drums:

1. Shift Drum A – controls the shift forks that engage 1st, 3rd and 5th gear
2. Shift Drum B – controls the shift forks that engage Reverse, 2nd, 4th and 6th gear

Each shift drum system consists of:

- Shift drum with groove that controls the position of shift forks
- Shift forks that engage synchronizers and gears
- 3 phase electric motor that controls the position of the shift drum
- Hall sensor system that knows the position of the motor within a rotation, used to calculate the shift drum angular position (the shift drum motor rotates 61.44 times for a single revolution of the shift drum)

Relationship between shift drum angle and gears;

Angle	Shift drum 1 position	Shift drum 2 position
0 deg	End stop near 1st	End stop near Reverse
10 deg	Centered in 1st	Centered in Reverse
55 deg	Neutral between 1st and 3rd	Neutral between R and 2nd
90 deg	Centered in 3rd	Centered in 2nd
135 deg	Neutral between 3rd and 5th	Neutral between 2nd and 4th
190 deg	Centered in 5th	Centered in 4th
200 deg	End stop near 5th	4th gear
235 deg		Neutral between 4th and 6th
280		Centered in 6th
290		End stop near 6th

ED_002078G_00001322-00262

Transmission Inputs

Transmission Range Sensor

DPS6 is range by wire with mechanical Park. DPS6 uses a dual PWM output (at 250 Hz) TRS where one signal is the inverse of the other and the sum of the two signals add up to 100%. Each signal is tested for frequency errors (P0706 / P2801), duty cycle out of range low (P0707 / P2802) and duty cycle out of range high (P0708 / P2803). There is also a correlation error (P2805) if the two signals do not add up to 100%.

Speed Sensors

Input 1 Speed Sensor (I1SS) – detects input shaft 1 speed, connected to clutch 1 and the odd gears (1st, 3rd and 5th). I1SS is tested for power supply faults (P06A6), circuit failures detected by the TCM hardware (P0715), erratic signal (P0716), and lack of signal (P0717).

Input 2 Speed Sensor (I2SS) – detects input shaft 2 speed, connected to clutch 2 and the even gears (R, 2nd, 4th and 6th). I2SS is tested for power supply faults (P06A7), circuit failures detected by the TCM hardware (P2765), erratic signal (P2766), and lack of signal (P2767).

Output Speed Sensor (OSS) – detects output speed. OSS is tested for power supply faults (P06A8), circuit failures detected by the TCM hardware (P0720), erratic signal (P0721), and lack of signal (P0722).

Note: because DPS6 is "Dry clutch" the only transmission fluid is for splash lube (no pump, no pressure control solenoids), so DPS6 does not have a temperature sensor.

Transmission Outputs

DPS6 has four 3-phase electric motors:

1. Clutch A motor – controls clutch A torque capacity. The Clutch A system is tested for:
    a. ATIC faults (P0805) – the ATIC is an internal TCM component that controls motor current.
    b. Hall sensor faults (P0806) – each phase has a hall sensor that provides motor position information
    c. Sequence faults (P0809) – as the motor rotates it generates an defined pattern from the 3 hall sensors, if the sequence of hall sensor patterns is off this code sets.
    d. Open circuit (P0900)
    e. Short to ground (P0902)
    f. Short to power (P0903)
    g. Clutch functionally stuck off (P07A2)
    h. Clutch functionally stuck on (P07A3)

2. Clutch B motor – controls clutch B torque capacity. The Clutch B system is tested for:
    a. ATIC faults (P087A) – the ATIC is an internal TCM component that controls motor current.
    b. Hall sensor faults (P087B) – each phase has a hall sensor that provides motor position information
    c. Sequence faults (P087E) – as the motor rotates it generates an defined pattern from the 3 hall sensors, if the sequence of hall sensor patterns is off this code sets.
    d. Open circuit (P090A)
    e. Short to ground (P090C)
    f. Short to power (P090D)
    g. Clutch functionally stuck off (P07A4)
    h. Clutch functionally stuck on (P07A5)

ED_002078G_00001322-00263

3. Shift drum A motor – controls the shift forks that engage 1st, 3rd and 5th gear. The system is tested for:
    a. ATIC faults (P2831) – the ATIC is an internal TCM component that controls motor current.
    b. Sequence faults (P2835) – as the motor rotates it generates an defined pattern from the 3 hall sensors, if the sequence of hall sensor patterns is off this code sets.
    c. Open circuit (P285B)
    d. Short to ground (P285D)
    e. Short to power (P285E)
    f. Stuck in gear (P072C, P072E, P073A)
    g. Position error (P2832) – includes blocked motor, or any failure that results in the TCM losing confidence in the relative position of the shift drum.

4. Shift drum A motor – controls the shift forks that engage 1st, 3rd and 5th gear. The system is tested for:
    a. ATIC faults (P2836) – the ATIC is an internal TCM component that controls motor current.
    b. Sequence faults (P283A) – as the motor rotates it generates an defined pattern from the 3 hall sensors, if the sequence of hall sensor patterns is off this code sets.
    c. Open circuit (P285F)
    d. Short to ground (P2861)
    e. Short to power (P2862)
    f. Stuck in gear (P072B, P072D, P072F, P073B)
    g. Position error (P2837) – includes blocked motor, or any failure that results in the TCM losing confidence in the relative position of the shift drum.

Transmission Control Module (TCM)

The TCM monitors itself by using various software monitoring functions. The TCM is monitored for:

a. If a RAM Read/Write error is detected during initialization, a P0604 fault code will be stored

b. the flash ROM is checked using a checksum calculation. If the checksum is incorrect during a P0605 fault will be stored

c. CPU performance is monitored for incorrect instructions or resets, if detected a P0607 fault code is set

d. If an error is found with NVRAM a P06B8 fault code will be stored

CAN Communications error

The TCM receives information from the ECM via CAN. If the CAN link fails the TCM no longer has torque or engine speed information available. The TCM will store a U0073 fault code if the CAN Bus is off. The TCM will store a U0100 fault code if it doesn't receive any more CAN messages from the ECM. A U0401 fault codes will be stored if the ECM received invalid/faulted information for the following CAN message items: engine torque, pedal position.

System voltage:

the TCM monitors system voltage and stores fault codes if it is out of range low (P0882) or out of range high (P0883). These thresholds are set based on hardware capability.

ED_002078G_00001322-00264

6R140 (RWD) Transmission with PCM or external TCM

Transmission Control System Architecture

Starting in 2011 MY 6R140 replaces 5R110W in Super Duty truck applications.

The 6R140 is a 6-speed, step ratio transmission that is controlled by an external PCM (gas engine applications) or TCM (Diesel engine applications). For Diesel the TCM communicates to the Engine Control Module (ECM), ABS Module, Instrument Cluster and Transfer Case Control Module using the high speed CAN communication link. The TCM incorporates a standalone OBD-II system. The TCM independently processes and stores fault codes, freeze frame, supports industry-standard PIDs as well as J1979 Mode 09 CALID and CVN. The TCM does not directly illuminate the MIL, but requests the ECM to do so. The TCM is located outside the transmission assembly. It is not serviceable with the exception of reprogramming.

Transmission Inputs

Transmission Range Sensor

6R140 uses a Non-contacting Pulse Width Modulated Transmission Range Sensor (TRS) that provides a duty cycle signal for each position. This signal is transmitted at a frequency of 125 Hz. The PCM / TCM decode the duty cycle to determine the driver-selected gear position (Park, Rev, Neutral, OD, 3, 2, 1). This input device is checked for frequency out of range (P0706), duty cycle out of range low (P0707) and duty cycle out of range high (P0708)

Speed Sensors

The Turbine Shaft Speed (TSS) sensor and Output Shaft Speed (OSS) sensor are Hall effect sensors.

The Turbine Shaft Speed sensor is monitored by a rationality test, if engine speed and output shaft speed are high and a gear is engaged, it can be inferred that the vehicle is moving. If there is insufficient output from the TSS sensor a fault is stored (P0715).

The Output Shaft Speed sensor is monitored by a rationality test. If engine speed and turbine speed are high and a gear is engaged, it can be inferred that the vehicle is moving. If there is insufficient output from the OSS sensor a fault is stored (P0720).

Transmission Fluid Temperature

The Transmission Fluid Temperature Sensor is checked for out of range low (P0712), out of range high (P0713), and in-range failures (P0711).

Transmission Outputs

Shift Solenoids

6R140 has 5 shift solenoids:

- SSA – a Variable Force Solenoid (VFS) that controls CB1234 (a brake clutch, grounds an element to the case, that is on in 1st, 2nd, 3rd and 4th gear)
- SSB – a VFS that controls C35R (a rotating clutch on in 3rd, 5th and Reverse)
- SSC – a VFS that controls CB26 (a brake clutch on in 2nd and 6th gear)
- SSD – a VFS that controls CBLR (a brake clutch on in 1st gear with engine braking and Reverse)
- SSE – a VFS that controls C456 (a rotating clutch on in 4th, 5th and 6th gear)

Output circuits are checked for opens, short to ground and short to power faults (codes listed in that order) by the "smart driver" (see ADLER below) that controls the solenoids (SSA P0750, P0973, P0974; SSB P0755, P0976, P0977; SSC P0760, P0979, P0980; SSD P0765, P0982, P0983; SSE P0770, P0985, P0986).

The shift solenoids are also functional tested for stuck on and stuck off failures. This is determined by vehicle inputs such as gear command, and achieved gear (based on turbine and output speed). In general the shift solenoid malfunction codes actually cover the entire clutch system (solenoid, valves, seals and the clutch itself since using ratio there is no way to isolate the solenoid from the rest of the clutch system)

For SSA thru SSE Diagnostics will isolate the fault into clutch functionally (non-electrical) failed off (SSA P0751, SSB P0756, SSC P0761, SSD P0766. SSE P0771) and clutch functionally failed on (SSA: P0752, SSB: P0757, SSC: P0762, SSD: P0767, SSE: P0772).

Gear ratio errors:

If ratio errors are detected that do not match an expected pattern for a failed solenoid then gear ratio error fault codes (1st gear – P0731, 2nd gear – P0732, 3rd gear – P0733, 4th gear – P0734, 5th gear – P0735 or 6th gear – P0729) will be stored.

Torque Converter Clutch

The Torque Converter Clutch (TCC) solenoid is a Variable Force Solenoid. TCC solenoid circuit is checked electrically for open, short to ground and short to power circuit faults internally by the "smart driver" that controls the solenoids (P0740, P0742, P0744).

The TCC solenoid is checked functionally for stuck off faults by evaluating torque converter slip under steady state conditions when the torque converter is fully applied. If the slip exceeds the malfunction thresholds when the TCC is commanded on, a TCC malfunction is indicated (P0741).

The TCC solenoid is monitored functionally for stuck on faults (P2758) by monitoring for lack of clutch slip when the TCC is commanded off, but this code is non-MIL because while a stuck on TCC solenoid may cause driveability complaints and/or cause engine stalls it does not impact emissions or fuel economy.

Electronic Pressure Control

The EPC solenoid is a variable force solenoid that controls line pressure in the transmission. The EPC solenoid is monitored for open, short to ground or short to power faults by the "smart driver" that controls the solenoid. If a short to ground (low pressure) is detected, a high side switch will be opened. This switch removes power from all 7 VFSs, providing Park, Reverse, Neutral, and 5M (in all forward ranges) with maximum line pressure based on

ED_002078G_00001322-00266

manual lever position. This solenoid is tested for open (P0960), short to ground (P0962), and short to power (P0963) malfunctions.

Transmission Solenoid Power Controll (TSPC)

6F140 PCM or TCM has a internal high side switch called TSPC that can be used to remove power from all 7 solenoids simultaneously. If the high side switch is opened, all 7 solenoids will be electrically off, providing Park, Reverse, Neutral, and 5M (in all forward ranges) with maximum line pressure based on manual lever position.

Due to current limitations TSPC is split into 2 pins / wires at the PCM / TCM. TSPC A provides power to SSA, SSC and SSE. TSPC B provides power to SSB, SSD, TCC and LPC. Each wire can be tested independently; P0657 sets for an issue with TSPC-A, P2669 sets for an issue with TPSC-B.

Although there are 2 pins and wires between the PCM / TCM and the transmission bulkhead connector the PCM / TCM contains only one TSPC internally – so the FMEM for either wire being failed is to open TSCP inside the PCM / TCM, which removes power from all 7 solenoids, providing P, R, N and 5th gear with open TCC and max line as FMEM for any TPSC faults.

ADLER (chip that controls all 7 solenoids) diagnostics:

The solenoids are controlled by an ADLER chip. The main micro sends commanded solenoid states to the ADLER, and receives back solenoid circuit fault information.

If communication with the ADLER is lost a P1636 fault code will be stored. If this failure is detected the states of the solenoids are unknown, so the control system will open the high side switch (removes power from all the solenoids), providing P, R, N and 5M with open TCC and max line pressure.

TRID Block

The TRID block is a portion of flash memory that contains solenoid characterization data tailored to the specific transmission to improve pressure accuracy.

The TRID block is monitored for two failures:

- TRID block checksum error / incorrect version of the TRID (P163E)
- TRID block not programmed (P163F)

If the TRID block is unavailable FMEM action limits operation to 1st and 3rd gear until the issue is correct.

Transmission Control Module (TCM – Diesel only)

The TCM has the same module diagnostics as a PCM – see miscellaneous CPU tests.

CAN Communications Error

The TCM receives information from the ECM via the high speed CAN network. If the CAN link or network fails, the TCM no longer has torque or engine speed information available. The TCM will store a U0073 fault code and will illuminate the MIL immediately (missing engine speed) if the CAN Bus is off. The TCM will store a U0100 fault code and will illuminate the MIL immediately (missing engine speed) if it stops receiving CAN messages from the ECM. A U0401 fault codes will be stored if the ECM sends invalid/faulted information for the following CAN message items: engine torque, pedal position.

TCM voltage

If the system voltage at the TCM is outside of the specified 9 to 16 volt range, a fault will be stored (P0882, P0883).

ED_002078G_00001322-00267

On Board Diagnostic Executive

The On-Board Diagnostic (OBD) Executive is a portion of the PCM strategy that manages the diagnostic trouble codes and operating modes for all diagnostic tests. It is the "traffic cop" of the diagnostic system. The Diagnostic Executive performs the following functions:

- Sequence the OBD monitors such that when a test runs, each input that it relies upon has already been tested. For 2008 MY and beyond ISO 14229 programs, the OBD monitors are no longer sequenced by the diagnostic executive.
- Controls and co-ordinates the execution of the individual OBD system monitors: Catalyst, Misfire, EGR, O2, Fuel, AIR, EVAP and, Comprehensive Component Monitor (CCM). For 2008 MY and beyond ISO 14229 programs, the execution of the OBD monitors is no longer controlled and coordinated by the diagnostic executive.
- Stores freeze frame and "similar condition" data.
- Manages storage and erasure of Diagnostic Trouble Codes as well as MIL illumination.
- Controls and co-ordinates the execution of the On-Demand tests: Key On Engine Off (KOEO)Key On Engine Running (KOER), and the Output Test Mode (OTM). For 2008 MY and beyond ISO 14229 programs, the Output Test Mode is no longer supported by the diagnostic executive.
- Performs transitions between various states of the diagnostic and powertrain control system to minimize the effects on vehicle operation.
- Interfaces with the diagnostic test tools to provide diagnostic information (I/M readiness, various J1979 test modes) and responses to special diagnostic requests (J1979 Mode 08 and 09).
- Tracks and manages indication of the driving cycle which includes the time between two key on events that include an engine start and key off.

The diagnostic executive also controls several overall, global OBD entry conditions.

- The battery voltage must fall between 11.0 and 18.0 volts to initiate monitoring cycles.
- The engine must be started to initiate the engine started, engine running, and engine off monitoring cycles.
- The Diagnostic Executive suspends OBD monitoring when battery voltage falls below 11.0 volts.
- The Diagnostic Executive suspends monitoring of fuel-system related monitors (catalyst, misfire, evap, O2, AIR and fuel system) when fuel level falls below 15%. For 2005 MY and beyond, the execution of the fuel related OBD monitors is no longer suspended for fuel level by the diagnostic executive.

The diagnostic executive controls the setting and clearing of pending and confirmed DTCs.

- A pending DTC and freeze frame data is stored after a fault is confirmed on the first monitoring cycle. If the fault recurs on the next driving cycle, a confirmed DTC is stored, freeze frame data is updated, and the MIL is illuminated. If confirmed fault free on the next driving cycle, the pending DTC and freeze frame data is erased on the next power-up.
- For the 2005 MY and later, pending DTCs will be displayed as long as the fault is present. Note that OBD-II regulations required a complete fault-free monitoring cycle to occur before erasing a pending DTC. In practice, this means that a pending DTC is erased on the next power-up after a fault-free monitoring cycle.
- For clearing comprehensive component monitoring (CCM) pending DTCs, the specific monitor must determine that no fault is present, and a 2-hour engine off soak has occurred prior to starting the vehicle. The 2-hour soak criteria for clearing CCM confirmed and pending DTCs has been utilized since the 2000 MY. For 2008 MY and beyond ISO 14229 programs, the engine off soak is no longer used by the diagnostic executive.
- After a confirmed DTC is stored and the MIL has been illuminated, three consecutive confirmed fault-free monitoring cycles must occur before the MIL can be extinguished on the next (fourth) power-up. After 40 engine warm-ups, the DTC and freeze frame data is erased.

ED_002078G_00001322-00268

The diagnostic executive controls the setting and clearing of permanent DTCs.

- A permanent DTC is stored when a confirmed DTC is stored, the MIL has been illuminated, and there are not yet six permanent DTCs stored.
- After a permanent DTC is stored, three consecutive confirmed fault-free monitoring cycles must occur before the permanent DTC can be erased.
- After a permanent DTC is stored, one confirmed fault-free monitoring cycle must occur, following a DTC reset request, before the permanent DTC can be erased. For 2010MY and beyond ISO 14229 programs a driving cycle including the following criteria must also occur, following the DTC reset request, before a permanent DTC can be erased:
    - Cumulative time since engine start is greater than or equal to 600 seconds;
    - Cumulative vehicle operation at or above 25 miles per hour occurs for greater than or equal to 300 seconds (medium-duty vehicles with diesel engines certified on an engine dynamometer may use cumulative operation at or above 15% calculated load in lieu of at or above 25 miles per hour for purposes of this criteria); and
    - Continuous vehicle operation at idle (i.e., accelerator pedal released by driver and vehicle speed less than or equal to one mile per hour) for greater than or equal to 30 seconds.
- A permanent DTC can not be erased by a KAM clear (battery disconnect). Additionally, its confirmed DTC counterpart will be restored after completion of the KAM reset (battery reconnect).

ED_002078G_00001322-00269

Exponentially Weighted Moving Average

Exponentially Weighted Moving Averaging is a well-documented statistical data processing technique that is used to reduce the variability on an incoming stream of data. Use of EWMA does not affect the mean of the data; however, it does affect the distribution of the data. Use of EWMA serves to “filter out” data points that exhibit excessive and unusual variability and could otherwise erroneously light the MIL.

The simplified mathematical equation for EWMA implemented in software is as follows:

New Average = [New data point * “filter constant”] + [(1 - “filter constant”) * Old Average]

This equation produces an exponential response to a step-change in the input data. The "Filter Constant" determines the time constant of the response. A large filter constant (i.e. 0.90) means that 90% of the new data point is averaged in with 10% of the old average. This produces a very fast response to a step change. Conversely, a small filter constant (i.e. 0.10) means that only 10% of the new data point is averaged in with 90% of the old average. This produces a slower response to a step change.

When EWMA is applied to a monitor, the new data point is the result from the latest monitor evaluation. A new average is calculated each time the monitor is evaluated and stored in Keep Alive Memory (KAM). This normally occurs each driving cycle. The MIL is illuminated and a DTC is stored based on the New Average store in KAM.

In order to facilitate repair verification and DDV demonstration, 2 different filter constants are used. A “fast filter constant” is used after KAM is cleared or DTCs are erased and a “normal filter constant” is used for normal customer driving. The “fast filter” is used for 2 driving cycles after KAM is cleared/DTCs are erased, and then the “normal filter” is used. The “fast filter” allows for easy repair verification and monitor demonstration in 2 driving cycles, while the normal filter is used to allow up to 6 driving cycles, on average, to properly identify a malfunction and illuminate the MIL. This feature is called Fast Initial Response (FIR). The fast filter is always calibrated to 1.0 which means that the EWMA is effectively disabled because the new average is 100% of the new data point. Since the EWMA is effectively disabled, it takes twp driving cycles to set the MIL. The first driving cycle with a fault will set a pending DTC; the second driving cycle will set a confirmed code and illuminate the MIL.

The other unique feature used with EWMA is called Step Change Logic (SCL). This logic detects an abrupt change from a no-fault condition to a fault condition. This is done by comparing the new data point to the EWMA old average. If the two points differ by more than a calibrated amount (i.e. the new data point is outside the normal distribution), it means that a catastrophic failure has occurred. The fast filter is then used in the same manner as for the FIR feature above. Since the EWMA is effectively disabled, it takes twp driving cycles to set the MIL. The first driving cycle with a fault will set a pending DTC; the second driving cycle will set a confirmed code and illuminate the MIL. The SCL becomes active after the 4th "normal" monitoring cycle to give the EWMA a chance to stabilize.

During "normal" EWMA operation, a slower filter constant is used. The "normal filer" allows the MIL to be illuminated in 1 to 6 driving cycles. A confirmed code is set and the MIL is illuminated as soon as the EWMA crosses the malfunction threshold. There is no pending DTC because EWMA uses a 1-trip MIL.

In order to relate filter constants to driving cycles for MIL illumination, filter constants must be converted to time constants. The mathematical relationship is described below:

Time constant = [(1 / filter constant) - 1] * evaluation period

The evaluation period is a driving cycle. The time constant is the time it takes to achieve 68% of a step-change to an input. Two time constants achieve 95% of a step change input.

EWMA Examples

EWMA with FIR and SCL has been incorporated in the IAF catalyst monitor, the Rear O2 response test and the EONV Evaporative system leak check monitor. There are 3 parameters that determine the MIL illumination characteristics.

"Fast" filter constant (0.9999), used for 2 driving cycles after DTCs are cleared/KAM is reset (FIR) and for Step Change Logic (SCL)

"Normal" filter constant(typically 0.4), used for all subsequent, "normal" customer driving

Number of driving cycles to use fast filter after KAM clear (set to 2 driving cycles)

Several examples for a typical catalyst monitor calibration are shown in the tables below. The first example does not show SCL in order to better illustrate the EWMA calculation and the 1-trip MIL.

Monitor evaluation ("new data")	EWMA Filter Calculation, "normal" filter constant set to 0.4 Malfunction threshold = .75	Weighted Average ("new average")	Driving cycle number	Action/Comment
0.15	.15 * (0.4) + .15 * (1 - 0.4)	0.15		normal 120K system
1.0	1.0 * (0.4) + .15 * (1 - 0.4)	0.49	1	large failure occurs
1.0	1.0 * (0.4) + .49 * (1 - 0.4)	0.69	2	
1.0	1.0 * (0.4) + .69 * (1 - 0.4)	0.82	3	exceeds threshold, MIL on
1.0	1.0 * (0.4) + .82 * (1 - 0.4)	0.89	4	MIL on
0.8	0.8 * (0.4) + .15 * (1 - 0.4)	0.41	1	1.5 * threshold failure
0.8	0.8 * (0.4) + .41 * (1 - 0.4)	0.57	2	
0.8	0.8 * (0.4) + .57 * (1 - 0.4)	0.66	3	
0.8	0.8 * (0.4) + .66 * (1 - 0.4)	0.72	4	
0.8	0.8 * (0.4) + .72 * (1 - 0.4)	0.75	5	equals threshold, MIL on
0.8	0.8 * (0.4) + .75 * (1 - 0.4)	0.77	6	MIL on
0.8	0.8 * (0.99) + 0* (1 - 0.99)	0.8	1	1.5 * threshold failure after code clear, pending DTC
0.8	0.8 * (0.99) + .8 * (1 - 0.99)	0.8	2	MIL on (I/M Readiness set to "ready"

Note that older implementations of EWMA for the Index ratio catalyst monitor and non-intrusive stepper motor EGR monitor incorporate Fast Initial Response but do not incorporate step change logic. For both FIR and normal EWMA usage, a pending code is set when the new EWMA average exceeds the threshold and a confirmed code is set after the second time the EWMA average exceeds the threshold. (2-trip MIL). The "normal" filter is calibrated to illuminate the MIL between 2 and 6 driving cycles.

ED_002078G_00001322-00271

I/M Readiness

The readiness function is implemented based on the SAE J1979/ISO 15031-5 format. Clearing codes using a scan tool results in the various I/M readiness bits being set to a “not-ready” condition. As each non-continuous monitor completes a full diagnostic check, the I/M readiness bit associated with that monitor is set to a “ready” condition. This may take one or two driving cycles based on whether malfunctions are detected or not. The readiness bits for comprehensive component monitoring and misfire monitoring are immediately considered complete since they are continuous monitors. Because the evaporative system monitor requires ambient conditions between 40 and 100 °F and BARO > 22.5 " Hg (< 8,000 ft.) to run, special logic can “bypass” the running the evap monitor for purposes of clearing the evap system I/M readiness bit due to the continued presence of these extreme conditions. The table below shows which monitors must complete for I/M readiness.

I/M Readiness bit	Bank 1	Bank 2
Catalyst monitoring	P0420	P0430
Heated catalyst monitoring	Not Supported	Not Supported
Evaporative system monitoring (0.040"/0.150" monitor used for I/M readiness)	P0442 (0.040") P0455 (0.150 for HD OBD)	
Secondary air system monitoring	P0491/P0410/P2448	P0492/P2449
Oxygen sensor monitoring		
Upstream response test	P0133	P0153
Upstream lack of movement test	P2195/P2196	P2197/P2198
Upstream heater	P0053/P0030	P0059/P0050
Downstream functional test	P0136/P2270/P2271	P0156/P2272/P2273
Downstream heater	P0054/P00D2	P0060P00D4
Downstream response test	P013A/P013E	P013C/P014A
Post catalyst fuel trim monitor	P2096/P0297	P2098/P2099
Oxygen sensor heater monitoring	Same as O2 sensor above	Same as O2 sensor above
EGR and/or VVT system monitoring		
Stepper Motor EGR DPFE EGR	P0400 P1405/P1406/P0401/P0402	
VVT supported	P0011/P0012/P0014/P0015	P0021/P0022/P0024/P0025
Misfire monitoring	Always ready	Always ready
Fuel system monitoring	Fuel trim always ready	Fuel trim always ready
A/F ratio imbalance monitor	P219A	P219B
Comprehensive component monitoring	Always ready	Always ready

ED_002078G_00001322-00272

Evap bypass logic for new 1999 MY, 2000 MY, and beyond vehicles:

If the evaporative system monitor conditions are met with the exception of the 40 to 100 °F ambient temperatures or BARO range, a timer is incremented. The timer value is representative of conditions where the Evap monitor could have run (all entry conditions met except IAT and BARO) but did not run due to the presence of those extreme conditions. If the timer continuously exceeds 30 seconds during a driving cycle in which all continuous and non-continuous monitors were evaluated, the evaporative system monitor is then considered complete. If the above conditions are repeated during a second driving cycle, the I/M readiness bit for the evaporative system is set to a "ready" condition.

Power Take Off Mode

While PTO mode is engaged, the I/M readiness bits are set to a "not-ready" condition. When PTO mode is disengaged, the I/M readiness bits are restored to their previous states prior to PTO engagement. During PTO mode, only CCM circuit checks continue to be performed.

ED_002078G_00001322-00273

In-Use Monitor Performance Ratio

Manufacturers are required to implement software algorithms that track in-use performance for each of the following components: catalyst bank 1, catalyst bank 2, primary oxygen sensor bank 1, primary oxygen sensor bank 2, evaporative 0.020" leak detection system, EGR system, and secondary air system, and secondary oxygen sensor bank 1 and secondary oxygen sensor bank 2 for 2010 MY and beyond. The numerator for each component or system tracks the number of times that all conditions necessary for a specific monitor to detect a malfunction have been encountered. The denominator for each component or system tracks the number of times that the vehicle has been operated in the specified conditions.

If a vehicle utilizes Variable Valve Timing (VVT) in place of EGR, the VVT in-use data is reported in place of the EGR in-use data. If a vehicle utilizes both an EGR system and a VVT system, the PCM tracks the in-use performance data for both monitors, but reports only the data for the system with the lowest numerical ratio.

If a vehicle utilizes an evaporative system monitor that is certified to 0.040" or 0.150" requirements instead of 0.020" requirements, the PCM reports the 0.040" monitor or 0.150" monitor in-use performance data in place of the 0.020" in-use performance data.

The table below shows which monitors must complete to increment each IUMPR numerator.

Note that EVAP monitor takes longer to find a fault than to pass, therefore, it must use a "ghost monitor" that tracks whether the monitor could have found a fault, had a fault been present. To increment the IUMPR counter for EVAP, the 0.020" leak check must maintain monitoring conditions for 45 minutes after shutdown. The 0.040" leak check must maintain monitoring condition based on the longest time it take to pull to target vacuum. If the actual monitor fails, the ghost monitor does not run and the numerator is incremented.

Note that Catalyst monitor uses EWMA. The numerator increments after the catalyst monitor completes. After a code clear, the numerator increments after catalyst monitor completes 6 times.

IUMPR Counter Numerator	Controling Monitor
Catalyst Monitoring Bank 1	P0420
Catalyst Monitoring Bank 12	P0430
O2 Sensor Monitoring Bank 1	P0133
O2 Sensor Monitoring Bank 2	P0153
EGR and/or VVT System Monitoring	
EGR (if supported)	P0400/P0401
VVT (if supported)	P0011/P0012/P0014/P0015 P0021/P0022/P0024/P0025
EVAP Monitoring	
0.020" monitoring (California)	P0456
0.040" monitoring (Federal)	P0442
0.150" monitoring (HD OBD)	P0455
AIR Monitoring	P0410/P0491/P2448
Secondary O2 Sensor Monitoring Bank 1	P013A/P013E
Secondary O2 Sensor Monitoring Bank 2	P013C/P014A

ED_002078G_00001322-00274

Catalyst Temperature Model

A catalyst temperature model is currently used for entry into the catalyst and oxygen sensor monitors. The catalyst temperature model uses various PCM parameters to infer exhaust/catalyst temperature. For the 1998 MY, the catalyst temperature model has been enhanced and incorporated into the Type A misfire monitoring logic. The model has been enhanced to include a misfire-induced exotherm prediction. This allows the model to predict catalyst temperature in the presence of misfire.

The catalyst damage misfire logic (Type A) for MIL illumination has been modified to require that both the catalyst damage misfire rate and the catalyst damage temperature is being exceeded prior to MIL illumination. This change is intended to prevent the detection of unserviceable, unrepeatable, burst misfire during cold engine start-up while ensuring that the MIL is properly illuminated for misfires that truly damage the catalyst.

Beginning with the 2007 MY, the catalyst temperature model is also used to generate the primary inputs to the CSER Monitor as described in that section of this document.

Serial Data Link MIL Illumination

The OBD-II diagnostic communication messages utilize an industry standard 500 kbps CAN communication link.

The instrument cluster on some vehicles uses the same CAN data link to receive and display various types of information from the PCM. For example, the engine coolant temperature information displayed on the instrument cluster comes from the same ECT sensor used by the PCM for all its internal calculations.

These same vehicles use the CAN data link to illuminate the MIL rather than a circuit, hard-wired to the PCM. The PCM periodically sends the instrument cluster a message that tells it to turn on the MIL, turn off the MIL or blink the MIL. If the instrument cluster fails to receive a message within a 5-second timeout period, the instrument cluster itself illuminates the MIL. If communication is restored, the instrument cluster turns off the MIL after 5 seconds. Due to its limited capabilities, the instrument cluster does not generate or store Diagnostic Trouble Codes.

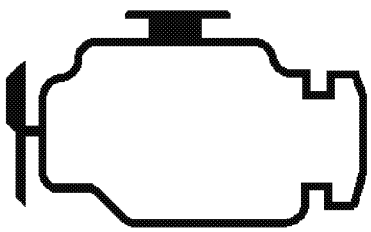

Calculated Load Value

LOAD_PCT (PID $04) =

$$\frac{\text{current airflow}}{(\text{peak airflow at WOT@STP as a function of rpm}) * (\text{BARO}/29.92) * \text{SQRT}(298/(\text{AAT}+273))}$$

Where: STP = Standard Temperature and Pressure = 25 °C, 29.92 in Hg BARO,
SQRT = square root,
WOT = wide open throttle,
AAT = Ambient Air Temperature and is in °C

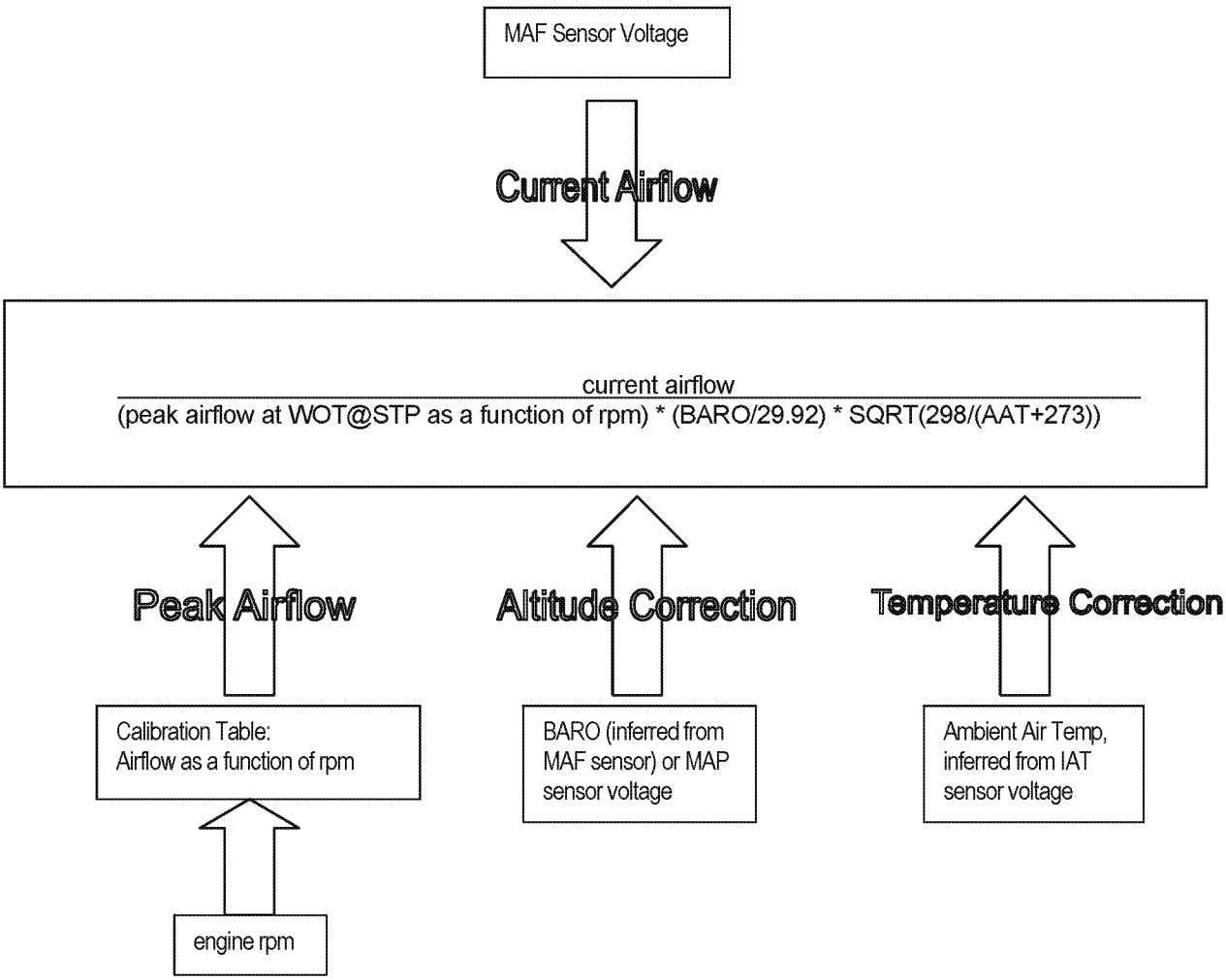

ED_002078G_00001322-00276

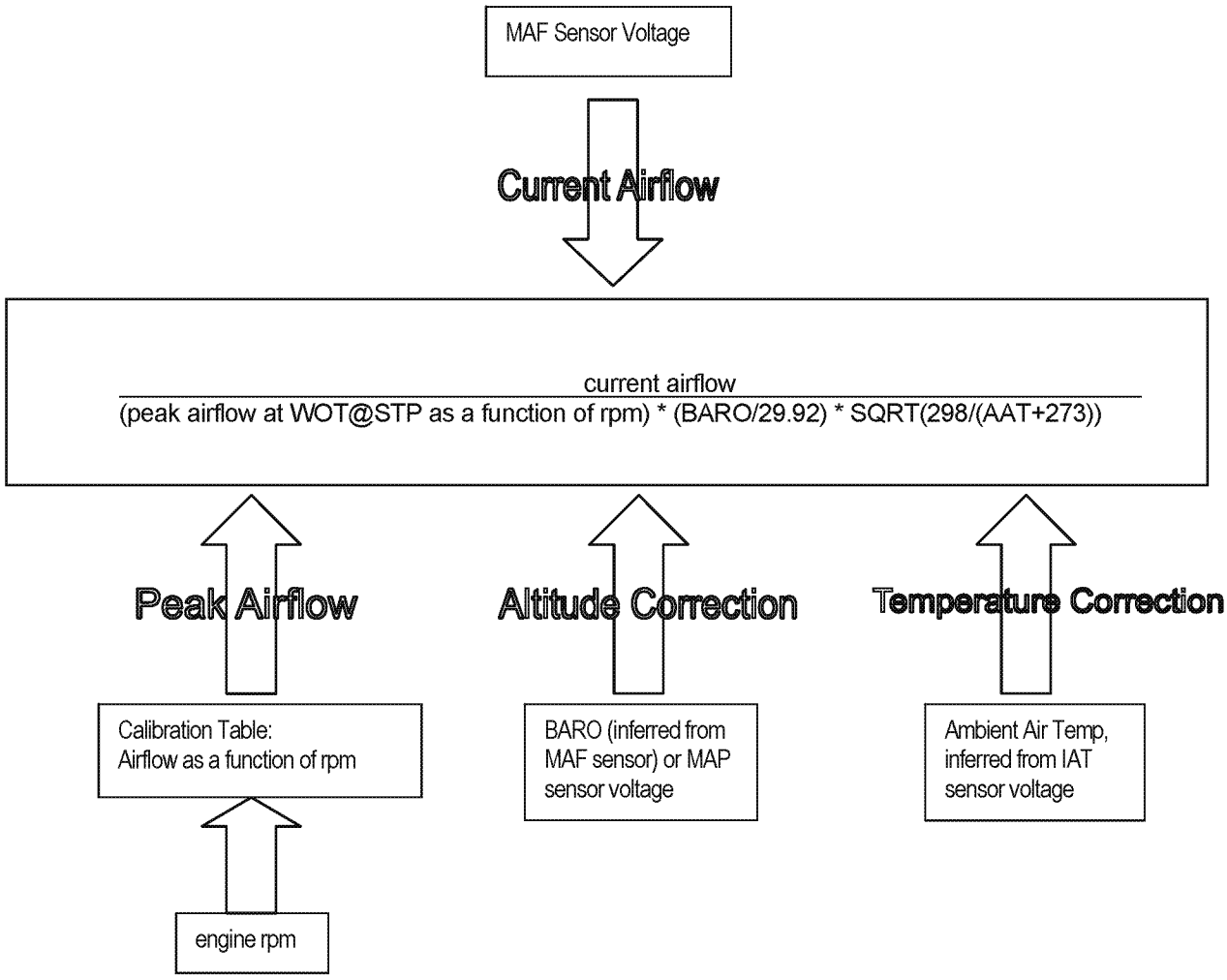

ED_002078G_00001322-00277

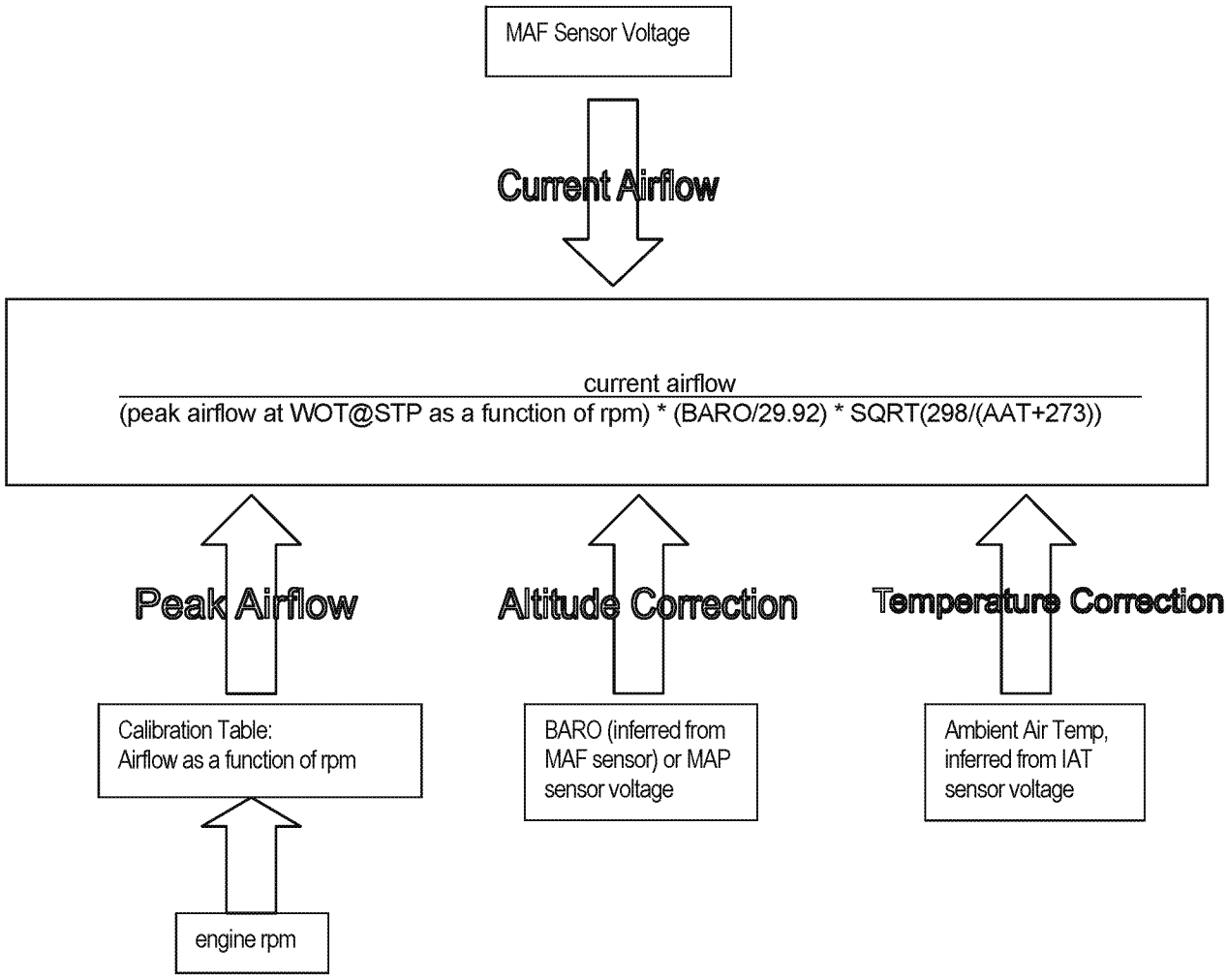

ED_002078G_00001322-00278

2014 MY OBD System Operation

Summary for Plug In and Hybrid Electric Vehicles

Table of Contents

Introduction Hybrid Electric Vehicles 5

- HEV Powertrain Description 5
- Benefits of Hybrid Electric Vehicles 6
- Key Powertrain Components 6
- Engine 6
- Inverter Control Module (ISC) 6
- Transaxle 7
- Battery 7
- Propulsion Modes 8
- Series Mode 8
- Positive Split Mode 8
- Negative Split Mode 8
- Electric Mode 9
- City & Highway Traffic Scenarios 9
- PHEV On Board Charger 10

Hybrid Electric Vehicle Control System 13

Catalyst Efficiency Monitor 15

Misfire Monitor 22

Low Data Rate System 22
Generic Misfire Algorithm Processing 22
Profile Correction 23
EVAP System Monitor - Overview 27
Evap Monitor Overview 27
Fuel Systems Hardware – Sealed (PHEV) vs non-Sealed (HEV) 30
EVAP System Monitor – Engine Running Diagnostics 31
EVAP System Monitor – Engine Off Diagnostics 37
ELCM Leak Detection 0.020" Monitor Entry Conditions 37
EVAP System Monitor Engine Off Component Checks 43
PHEV Re-Fueling System 51
Fuel System Monitor 56
FAOSC (Rear Fuel Trim) Monitor 62
Air Fuel Ratio Imbalance Monitor 64
Front UEGO Monitor 67
Front UEGO Signal 67
Front UEGO Slow/Delayed Response Monitor (2010 MY and beyond) 75
UEGO Heaters 78
Rear HO2S Monitor 81
Rear HO2S Signal 81
Rear HO2S Decel Fuel Shut Off Response Test 84
EWMA Fault Filtering 87
Rear HO2S Heaters, ... 90
Stepper Motor EGR System Monitor 92
PCV System Monitor 97
Enhanced Thermostat Monitor 98
HEV/PHEV Cooling System Diagnostics 100
Cold Start Emission Reduction Component Monitor 105
Cold Start Emission Reduction System Monitor 108
Variable Cam Timing System Monitor 111

ED_002078G_00001322-00280

Electronic Throttle Control 115
Transmission Range Sensor Inputs 117
Accelerator and Throttle Position Sensor Inputs 118
Electronic Throttle Monitor 120
Throttle Plate Position Controller (TPPC) Outputs 121
Comprehensive Component Monitor - Engine 122
Engine Temperature Sensor Inputs 122
IAT Rationality Test 125
Throttle Position Sensor 127
Mass Air Flow Sensor 127
MAF/TP Rationality Test 128
Miscellaneous CPU Tests 129
Ignition 131
Engine Outputs 134
Mechanical Returnless Fuel System (MRFS) — Dual Speed 135
Battery and Battery Charging Systems 137
Low Voltage Battery Charging System - Overview 137
High Voltage Battery Charging System - Overview 138
High Voltage Battery - Overview 144
Battery Energy Control Module (BECM) 146
Powersplit Transaxle 153
Transmission Overview 153
Transmission Control System Architecture 155
Transmission Inputs 155
HPCM Outputs 156
Hybrid Powertrain Control Module (HPCM) 156
Hybrid Powertrain Control Module 157
Hybrid Powertrain Control Module (HPCM) External Inputs 157
Transmission Range Sensor Inputs 171
Transmission Auxiliary Oil Pump 172

ED_002078G_00001322-00281

PCM On Board Diagnostic Executive 178

Exponentially Weighted Moving Average 180

I/M Readiness Code 182

Catalyst Temperature Model 183

Serial Data Link MIL Illumination 183

ED_002078G_00001322-00282

HEV Powertrain Description

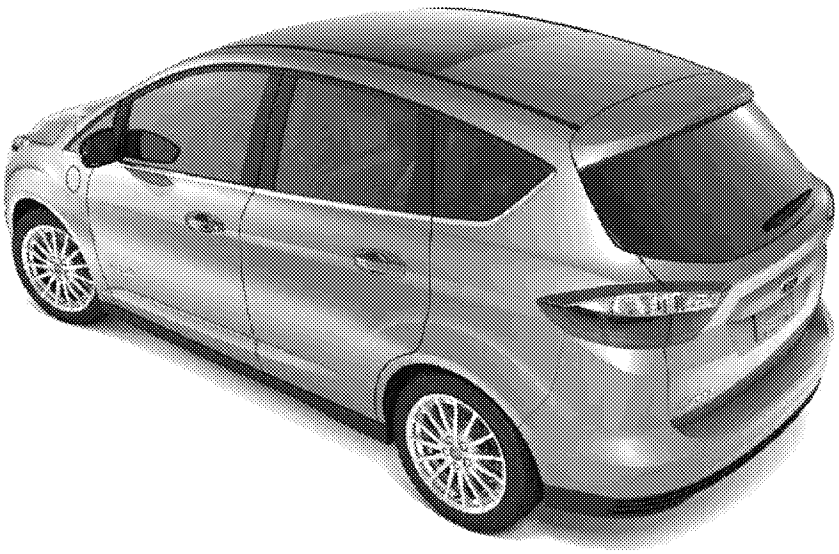

A hybrid electric vehicle is powered by a conventional engine with an electric motor added for enhanced fuel economy and reduced emissions. The electric motor can also be used to boost power and enhance performance (like an extra "charge"). This type of vehicle is well suited for the environmentally aware driver who wants better fuel economy and fewer pollutants, but doesn't want the hassle of plug-ins.

A vehicle can be "more" of a hybrid than another. There are various levels of "hybridization," mild, full, and plug-in.

With all HEV variants, the engine turns off when it is not needed, reducing fuel waste, and instantly restarts when the need for power is detected. In addition, all hybrids provide electric assist, in that the combustion engine gets a boost of electric power from the battery pack. This provides additional acceleration performance when needed, without additional use of fuel. The main difference between the HEV variants is in the relative sizing of the electric powertrain to the combustion powertrain.

A mild hybrid has a relatively small electric motor to provide traction power and a small capacity battery. It is designed to provide a start-stop function along with a small amount of acceleration power (used to assist the combustion engine) and a small amount of regenerative braking (meaning vehicle energy that would otherwise would be wasted, is collected during braking to recharge the battery).

A full hybrid provides the same functions as a mild hybrid, but to a larger degree. Since it uses a larger electric motor and battery, it can provide greater amount of acceleration and regenerative braking power. In addition, a full hybrid provides an electric launch, whereby the electric motor can accelerate the vehicle without the combustion engine for small distances. The electric motor can be used to accelerate by itself (in pure electric mode) or in combination with the internal combustion engine (for greater power).

Plug-In hybrids have all of the functions and capabilities of a full hybrid, however, they use a larger battery which gives them greater electric-only driving range. In addition, plug-in hybrids have a charge port which can be used to charge the battery externally from electric mains to allow them to have full electric range without having to run the combustion engine.

ED_002078G_00001322-00283

Benefits of Hybrid Electric Vehicles

- Reduces emissions by increasing average engine efficiency.
- Engine shuts down, when the vehicle is stopped.
- Electric motor boosts acceleration performance.
- Regenerative brakes recapture energy, to recharge the battery.
- Improved fuel economy stretches a tank of gas further, saves you money, and helps you conserve our limited petroleum resources.
- Driving performance is optimized because both the gas engine and electric motor are working for you.
- No battery plug-ins required for mild and full hybrids, and optional for plug-in hybrid.
- An HEV offers all the conveniences of conventional vehicles: spacious seating, storage room, creature comforts, and extended driving range.
- All Ford/Lincoln hybrids will be delivered, sold, and serviced at local Ford and Lincoln dealers.

Key Powertrain Components

Engine

- I-4 Gasoline Engine
- Electronic Throttle Control
- Atkinson Cycle to improve efficiency by reducing pumping losses
    - For Otto Cycle, expansion ratio equals compression ratio
    - Atkinson Cycle expansion ratio greater than compression ratio
- Leaves intake valve open longer during compression stroke pushing air back into intake manifold
- Operates with less vacuum and greater throttle opening to maintain air charge

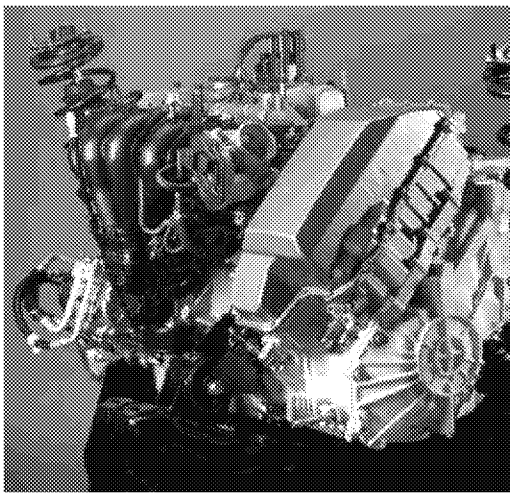

Inverter Control Module (ISC)

- Main hybrid control module
- Vehicle energy management functions
- Low level motor & gen control electronics and software
- Power electronics (motor and generator)
- Voltage boost converter
- Integrated heat exchanger
- Chassis mounted

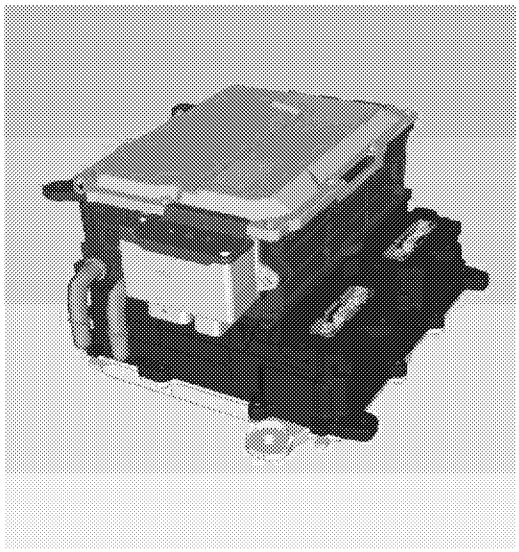

ED_002078G_00001322-00284

Transaxle

- 64 kW Permanent Magnet AC Generator Motor
- 88 kW Permanent Magnet AC Traction Motor
- Connected to ISC by 3-phase cables for each motor
- Planetary gear set and final drive gears
- Connected to front 2-wheel or all-wheel driveline

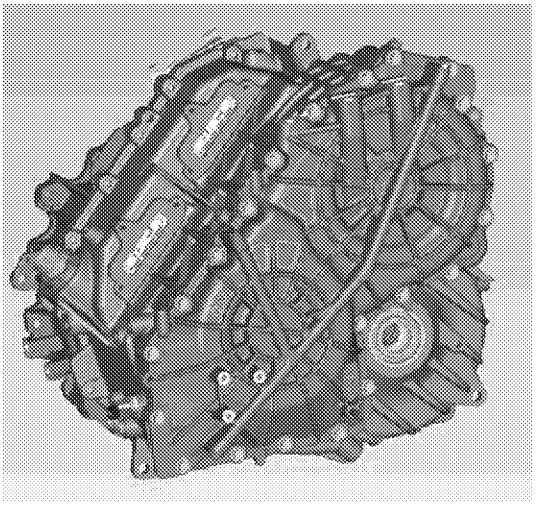

Battery

- Lithium-Ion battery chemistry
- Nearly twice the power density of previous model
- 35 kW power rating (new)

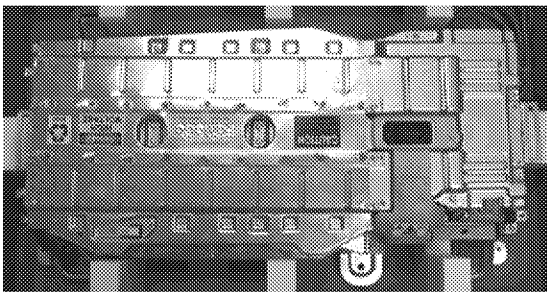

ED_002078G_00001322-00285

Propulsion Modes

Series Mode

- Used only when vehicle is not moving and the engine is running
- Engine may be running for battery charging, cabin or battery temperature control, or catalyst warm-up.

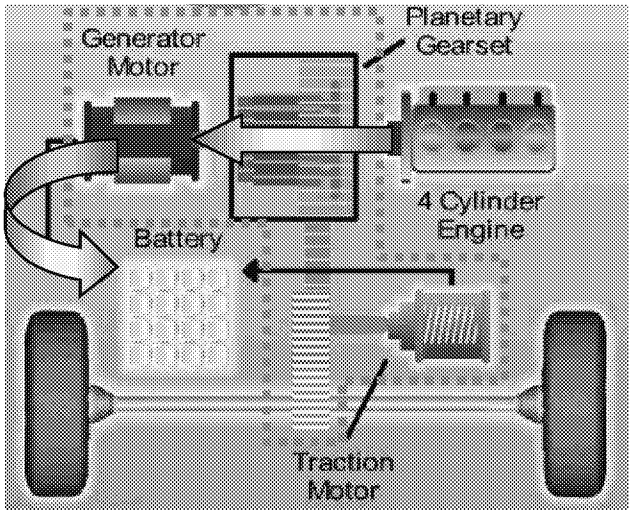

Positive Split Mode

- Engine is ON and driving the generator motor to produce electricity
- Power from the engine is split between the direct path to the road and the path through the generator motor
- Generator power can flow to the battery or to the traction motor
- The traction motor can operate as a motor or a generator to make up the difference between the engine power and the desired power
- This is the preferred mode whenever the battery needs to be charged or when at moderate loads and low vehicle speeds

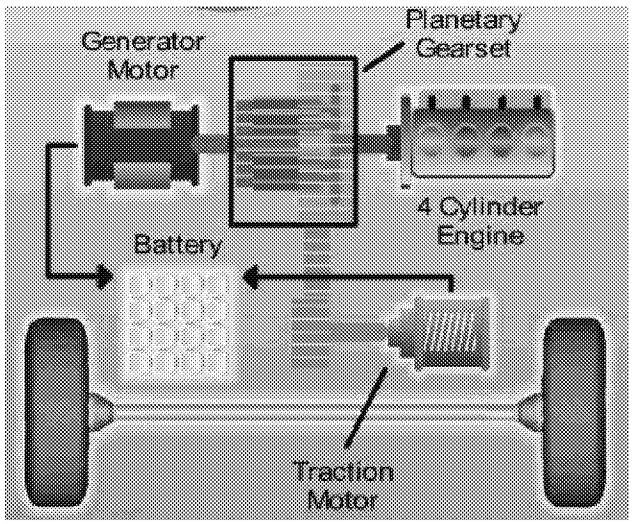

Negative Split Mode

- The engine is on and the generator motor consumes electrical energy to reduce engine speed
- The traction motor can operate as a motor or a generator to make up the difference between the engine power and the desired power
- Typical highway mode
- Occurs when the engine needs to be on, the system can not be operated in parallel mode and the battery is charged near its upper limit

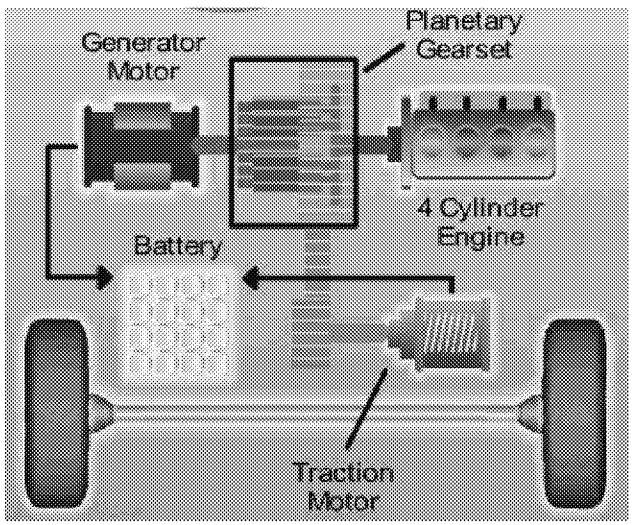

ED_002078G_00001322-00286

Electric Mode

- The vehicle is propelled by stored electrical energy only
- The engine is turned off
- The tractive torque supplied from the traction motor
- Preferred mode whenever the desired power is low enough such that it can be produced more efficiently by electrical system than engine
- Preferred mode in reverse because the engine can not deliver reverse torque
- Separate electric pump maintains power assisted steering

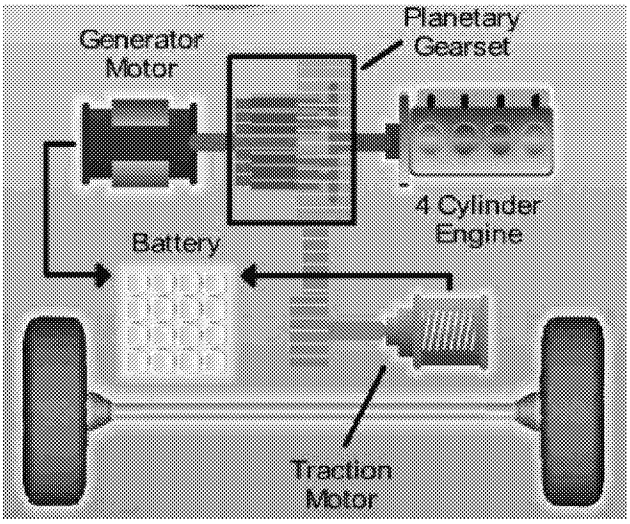

City & Highway Traffic Scenarios

Stopped

- The engine will be off unless it needs to be on for reasons other than tractive power (Max A/C, vacuum, catalyst temp, heat, purge, low SOC)

Launching

- At low speed or low power demand, the launch mode will be electric, unless the engine needs to be on for other reasons.
- At moderate speed or high desired power, the engine will come on.

Entering highway or Passing

- At high acceleration demand, the engine power will be boosted with battery power through the traction motor to provide quick V-6 like response.

Cruising

- At light load, the system may operate in parallel, positive split or negative split mode depending on the battery charge.
- At heavy load (due to high speeds, weight, towing or grade), the system will be limited to engine only performance (no battery support).
- Limited regenerative braking will be used.

Exiting highway

- Provides an opportunity for regenerative braking.

Braking

- At high speed, the engine torque is ramped down, the traction motor regenerates to a limit and the foundation brakes are applied as necessary (at the traction motor or battery regen limits).
- At moderate and low speed, the engine will be turned off.

ED_002078G_00001322-00287

PHEV On Board Charger

Charge Fault HMI (Human Machine Interface) On the Vehicle

Vehicle Interior

- Cluster - Upon a charger fault, the BCCM and BECM can request the P/T malfunction indicator on the instrument cluster (amber wrench light). No specific message to point to the charge system which is similar to other onboard requests for this telltale.
- 8" Centerstack Screen - A charging fault message will be displayed in 8" centerstack.

Vehicle Exterior

The vehicle will have a light ring around the charge port located on the driver's fender. Upon a charge fault, all segments of the light ring will flash rapidly for 20-30 minutes.

Lighted ring indicates fault and state of charge

Ring illuminates in 4 segments representing 25% increments of battery state of charge

ED_002078G_00001322-00288

Charge Fault HMI Near the Vehicle

120V Convenience Cord

The convenience cord includes a CCID box with HMI display. A triangle with a (!) LED in the center indicates the following fault conditions:

- CCID self test failure
- CCID microprocessor failure
- GFCI final fault
- Over current protection "final" fault

240V Wall Mount Charger

Red LED light illuminates indicating fault conditions. LED blinks unique codes depending on fault:

- Vehicle fault – 1x / 2 sec
- Contactor fault – 1x / 1 sec
- CCID fault – 2x / 1 sec
- Ground missing – 10x / 1 sec
- Failed internal self test – on steady

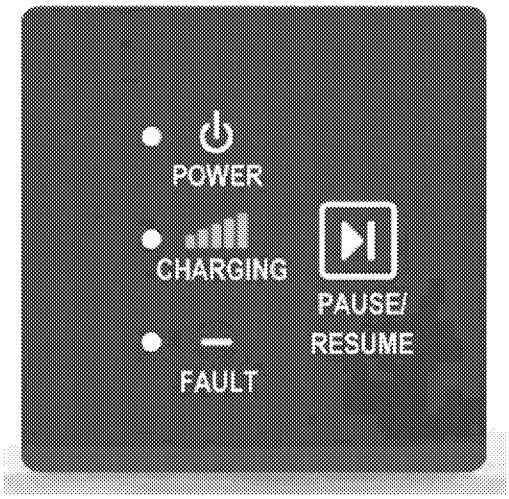

ED_002078G_00001322-00289

Charge Fault HMI Remote from the Vehicle

MyFord Mobile App

Standard feature allowing cellular communication between vehicle and cell phone/computer
New vehicle purchase includes pre-paid 5 year subscription (renewable)
Upon charge fault, automatic alerts will be sent to the owner's cell phone and/or computer via text/email message.
The following reasons will trigger an alert:

- Charging Fault (during charging only)
- Scheduled Charge Not Occurring
- Accidental Unplug - if charger is unplugged and vehicle not driven within 15 minutes

Upon request by owner, MyFord Mobile App also sends vehicle reports containing other information that could point to a charging fault:

- Charge status, including: generic fault (not known if in the car or out of the car), fault inside car, fault outside car, charge in progress, charge scheduled, and charge complete
- Plug status
- Battery health – if BECM not requesting telltale, health is ok

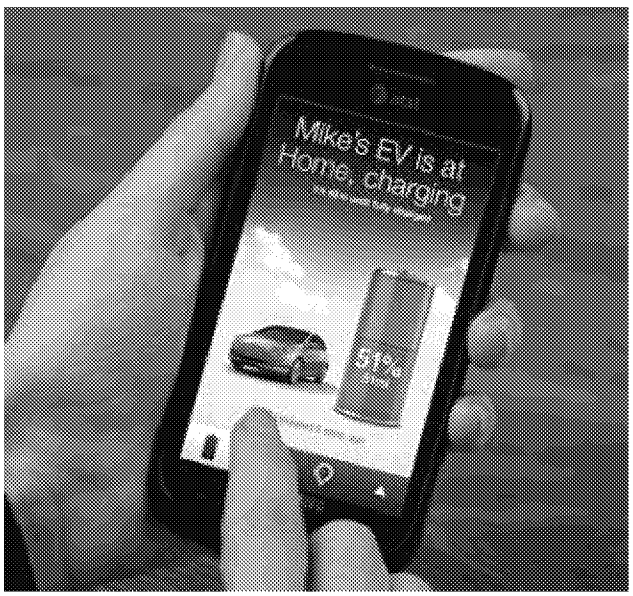

ED_002078G_00001322-00290

Ford HEV Powertrain Control System

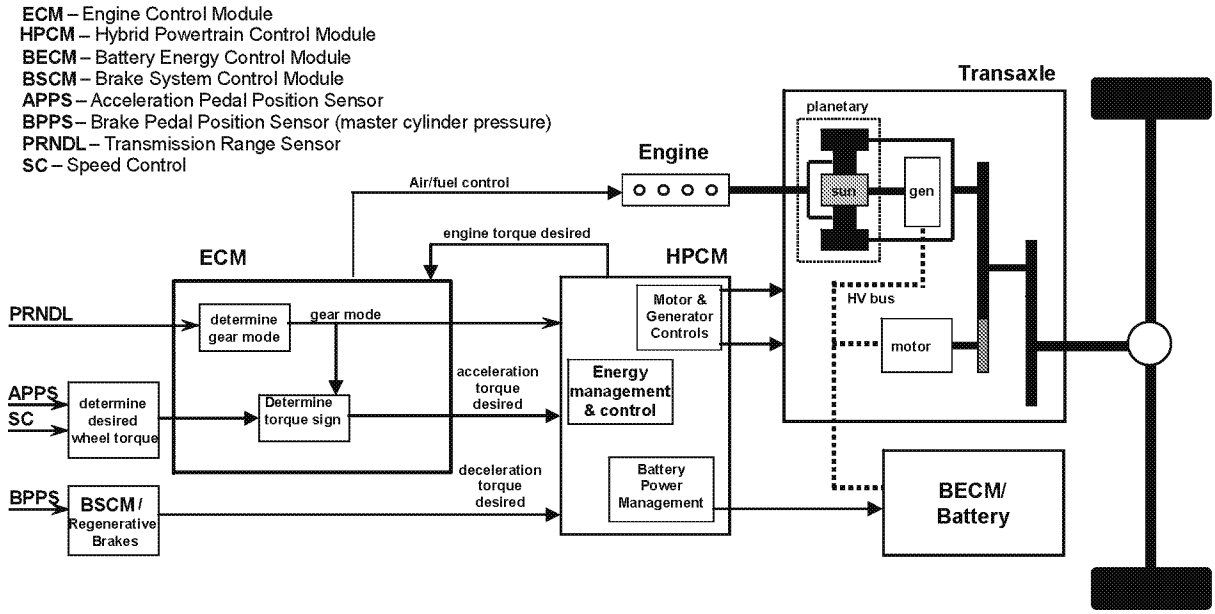

The Hybrid Electric Vehicle Control System uses four modules to control hybrid electric powertrain functions:

The Engine Control Module (ECM) monitors driver inputs and controls engine related functions.

The Hybrid Powertrain Control Module (HPCM) interprets driver inputs and controls energy management and generator and motor functions.

The Battery Energy Control Module (BECM) controls the high voltage battery pack.

The Brake System Control Module (BSCM) monitors driver braking requests and controls the braking functions.

All these modules use CAN communication for all diagnostic functions and normal-mode communications.

The ECM is a stand-alone OBD-II control module and meets all J1979 requirements. These include generic DIDs, freeze frame storage, pending and confirmed DTC retrieval and clearing, Mode 06 test data, Mode 08 evap system test, Mode 09 VIN, CALID and CVN, and Mode 0A Permanent DTCs. The OBD-II monitors for the engine are similar to the monitors used by a conventional gasoline vehicle. The basic difference between a conventional gasoline engine and the hybrid engine is that the engine often shuts down while in electric mode. This sometimes requires active intervention by the diagnostic executive to ensure that all OBD-II monitor can complete.

The HPCM is a stand-alone OBD-II control module and meets all J1979 requirements. These include generic DIDs, freeze frame storage, pending and confirmed DTC retrieval and clearing, and Mode 09 CALID and CVN, and Mode 0A Permanent DTCs. Some of the OBD-II monitors for hybrid system are similar to the monitors used by a conventional transmission; however, many of the monitors are unique to the hybrid generator and motor sensors and controls. The HPCM is housed within the Inverter Control System (ISC) models, and is not serviceable with the exception of reflashing memory.

ED_002078G_00001322-00291

The Battery Energy Control Module (BECM) is a stand-alone OBD-II control module and meets all J1979 requirements. These include generic PIDs, freeze frame storage, pending and confirmed DTC retrieval and clearing, and Mode 09 CALID and CVN. The BECM is housed within the battery pack and is not serviceable with the exception of reflashing memory. As a result, the BECM supports J1979 Mode 09 CALID and CVN.

The Brake System Control Module (BSCM) is not an OBD-II control module because there are no regenerative braking faults that affect emissions.

ED_002078G_00001322-00292

Catalyst Efficiency Monitor

The Catalyst Efficiency Monitor uses an oxygen sensor after the catalyst to infer the hydrocarbon efficiency based on oxygen storage capacity of the ceria and precious metals in the washcoat. Under normal, closed-loop fuel conditions, high efficiency catalysts have significant oxygen storage. This makes the switching frequency of the rear HO2S very slow and reduces the amplitude. As catalyst efficiency deteriorates due to thermal and/or chemical deterioration, its ability to store oxygen declines and the post-catalyst HO2S signal begins to switch more rapidly with increasing amplitude. The predominant failure mode for high mileage catalysts is chemical deterioration (phosphorus deposition on the front brick of the catalyst), not thermal deterioration.

Integrated Air/Fuel Method

The Integrated Air/Fuel Catalyst Monitor assesses the oxygen storage capacity of a catalyst after a fuel cut event. The monitor integrates how much excess fuel is needed to drive the monitored catalyst to a rich condition starting from an oxygen-saturated, lean condition. Therefore, the monitor is a measure of how much fuel is required to force catalyst breakthrough from lean to rich. To accomplish this, the monitor runs during fuel reactivation following a Decel Fuel Shut Off (DFSO) event. The monitor completes after a calibrated number of DFSO monitoring events have occurred. The IAF catalyst monitor can be used with either a wide range O2 sensor (UEGO) or a conventional switching sensor (HEGO).

Functionally, the equation is:

$$IAF = \int \left(\frac{Fuel_needed_for_stoich}{Fuel_Measured} - Fuel_needed_for_stoich \right)$$

where the units are in pounds mass of fuel.

The monitor runs during reactivation fueling following an injector cut. The diagram below shows examples of one DFSO event with a threshold catalyst and with a Full Useful Life catalyst where:

- INJON = # of injectors on.
- CMS is the catalyst monitor sensor voltage. When the rear O2 sensor crosses 0.45 volts (i.e. rich) the monitor will complete for the given DFSO event.
- LAM (LAMBDA) is the front O2 sensor (UEGO) signal.
- CATMN_IAF_SUM is the integral from the equations above (Y axis on the right).

ED_002078G_00001322-00293

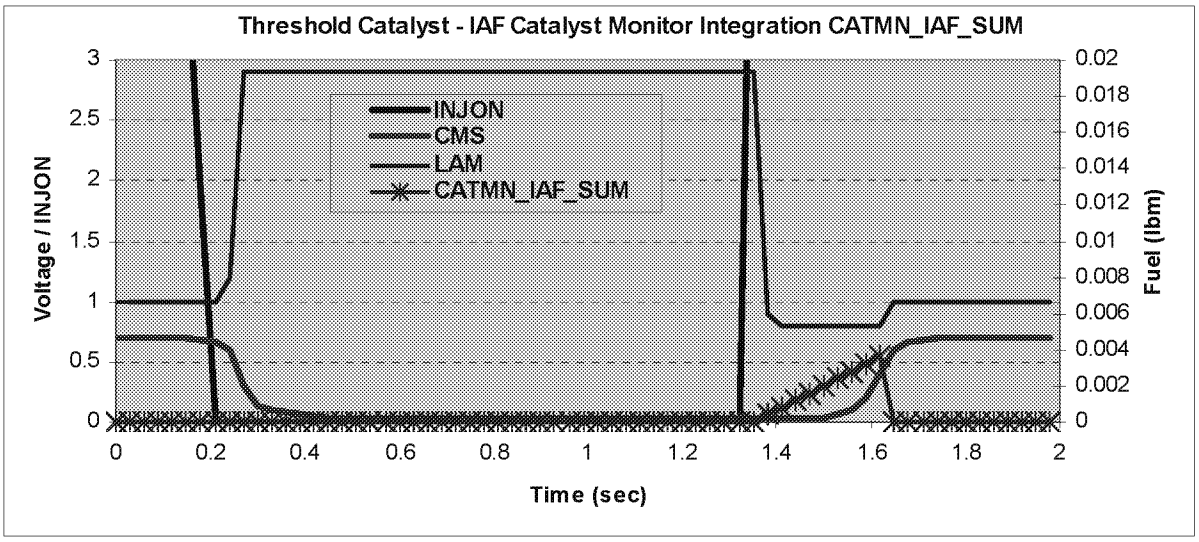

In this example, CATMN_IAF_SUM is small because it doesn't take much fuel to break though a low oxygen storage threshold catalyst.

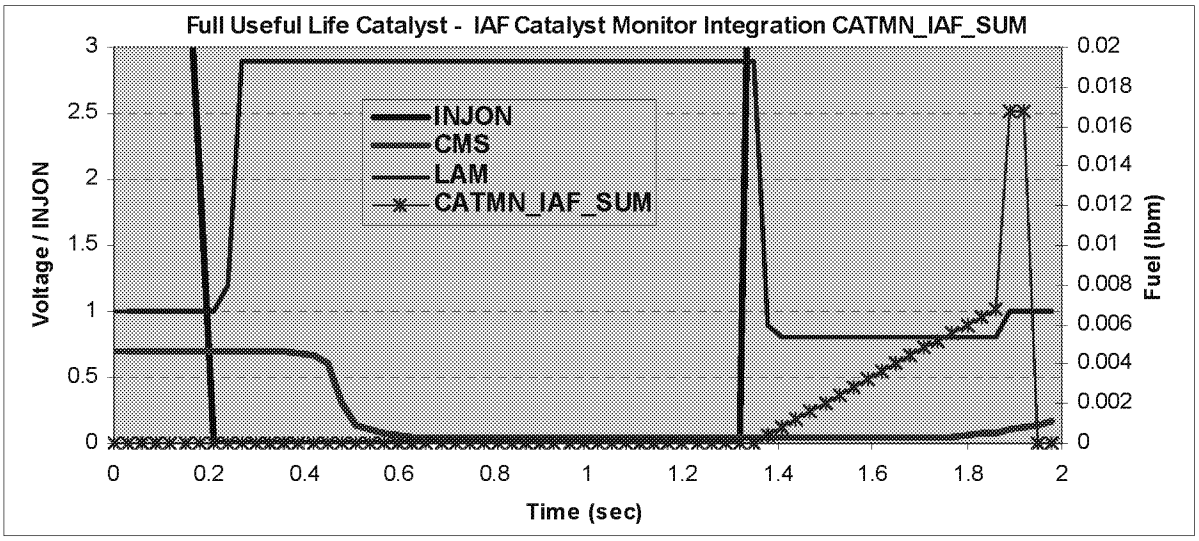

In this example, CATMN_IAF_SUM is much larger because it takes a substantial amount of fuel to break though a high oxygen storage threshold catalyst.

There are two sets of entry conditions into the IAF catalyst monitor. The high level entry conditions determine that the monitor would like to run following the next injector fuel cut event. The lower level entry conditions determine that the fuel cut-off event was suitable for monitoring and the monitor will run as soon as the injectors come back on.

ED_002078G_00001322-00294

1. The high level entry conditions are met when:

- There are no senor/hardware faults
- The base monitor entry conditions have been met (ECT, IAT, cat temp, fuel level, air mass)
- Required number of DFSO monitoring event have not yet completed

2. The lower level entry conditions are met when:

- The injectors are off
- The catalyst is believed to be saturated with oxygen (rear O2 indicates lean)
- The catalyst/rear O2 has been rich at least once since the last monitor event.

General Catalyst Monitor Operation

Rear HO2S sensors can be located in various ways to monitor different kinds of exhaust systems. In-line engines and many V-engines are monitored by individual bank. A rear HO2S sensor is used along with the front, fuel-control HO2S sensor for each bank. Two sensors are used on an in-line engine; four sensors are used on a V-engine. Some V-engines have exhaust banks that combine into a single underbody catalyst. These systems are referred to as Y-pipe systems. They use only one rear HO2S sensor along with the two front, fuel-control HO2S sensors. Y-pipe system use three sensors in all. For Y-pipe systems which utilize switching front O2 sensors, the two front HO2S sensor signals are combined by the software to infer what the HO2S signal would have been in front of the monitored catalyst. The inferred front HO2S signal and the actual single, rear HO2S signal is then used to calculate the switch ratio.

Many vehicles monitor less than 100% of the catalyst volume – often the first catalyst brick of the catalyst system. Partial volume monitoring is done on LEV-II vehicles in order to meet the 1.75 * emission-standard threshold for NMHC and NOx. The rationale for this practice is that the catalysts nearest the engine deteriorate first, allowing the catalyst monitor to be more sensitive and illuminate the MIL properly at lower emission standards.

Many applications that utilize partial-volume monitoring place the rear HO2S sensor after the first light-off catalyst can or, after the second catalyst can in a three-can per bank system. (A few applications placed the HO2S in the middle of the catalyst can, between the first and second bricks.)

The new Integrated Air/Fuel Catalyst Monitor can be used to monitor the entire catalyst volume, even on LEV-II vehicles.

Index ratios for ethanol (Flex fuel) vehicles vary based on the changing concentration of alcohol in the fuel. The malfunction threshold typically increases as the percent alcohol increases. For example, a malfunction threshold of 0.5 may be used at E10 (10% ethanol) and 0.9 may be used at E85 (85% ethanol). The malfunction thresholds are therefore adjusted based on the % alcohol in the fuel. (Note: Normal gasoline is allowed to contain up to 10% ethanol (E10)).

Vehicles with the Index Ratio Method Using a Switching HO2S Sensor employ an Exponentially Weighted Moving Average (EWMA) algorithm to improve the robustness of the catalyst monitor. During normal customer driving, a malfunction will illuminate the MIL, on average, in 3 to 6 driving cycles. If KAM is reset (battery disconnected) or DTCs are cleared, a malfunction will illuminate the MIL in 2 driving cycles. See the section on EWMA for additional information.

ED_002078G_00001322-00295

Vehicles with the Index Ratio Method Using a Wide Range HO2S Sensor (UEGO) or the Integrated Air/Fuel catalyst monitor employ an improved version of the EWMA algorithm.

The EWMA logic incorporates several important CARB requirements. These are:

- Fast Initial Response (FIR): The first 4 tests after a battery disconnect or code clear will process unfiltered data to quickly indicate a fault. The FIR will use a 2-trip MIL. This will help the service technician determine that a fault has been fixed.

- Step-change Logic (SCL): The logic will detect an abrupt change from a no-fault condition to a fault condition. The SCL will be active after the 4th catalyst monitor cycle and will also use a 2-trip MIL. This will illuminate the MIL when a fault is instantaneously induced.

- Normal EWMA (NORM): This is the normal mode of operation and uses an Exponentially Weighted Moving Average (EWMA) to filter the catalyst monitor test data. It is employed after the 4th catalyst test and will illuminate a MIL during the drive cycle where the EWMA value exceeds the fault threshold. (1 trip MIL).

Starting in the 2010 ½ Model Year and later, the catalyst monitor will employ catalyst break-in logic. This logic will prevent the catalyst monitor from running until after a catalyst break-in period.

The catalyst monitor will not run on a new vehicle from the assembly plant until 60 minutes of time above a catalyst temperature (typically 800 to 1100 deg F) has been accumulated or 300 miles has elapsed.

New modules at the assembly plant will have an NVRAM flag initialized to delay the catalyst monitor. Service modules and re-flash software will have the flag set to allow that catalyst monitor to run. The flag cannot be reset to delay the catalyst monitor from running by any tool or service procedure.

ED_002078G_00001322-00296

Integrated Air Fuel Catalyst Monitor

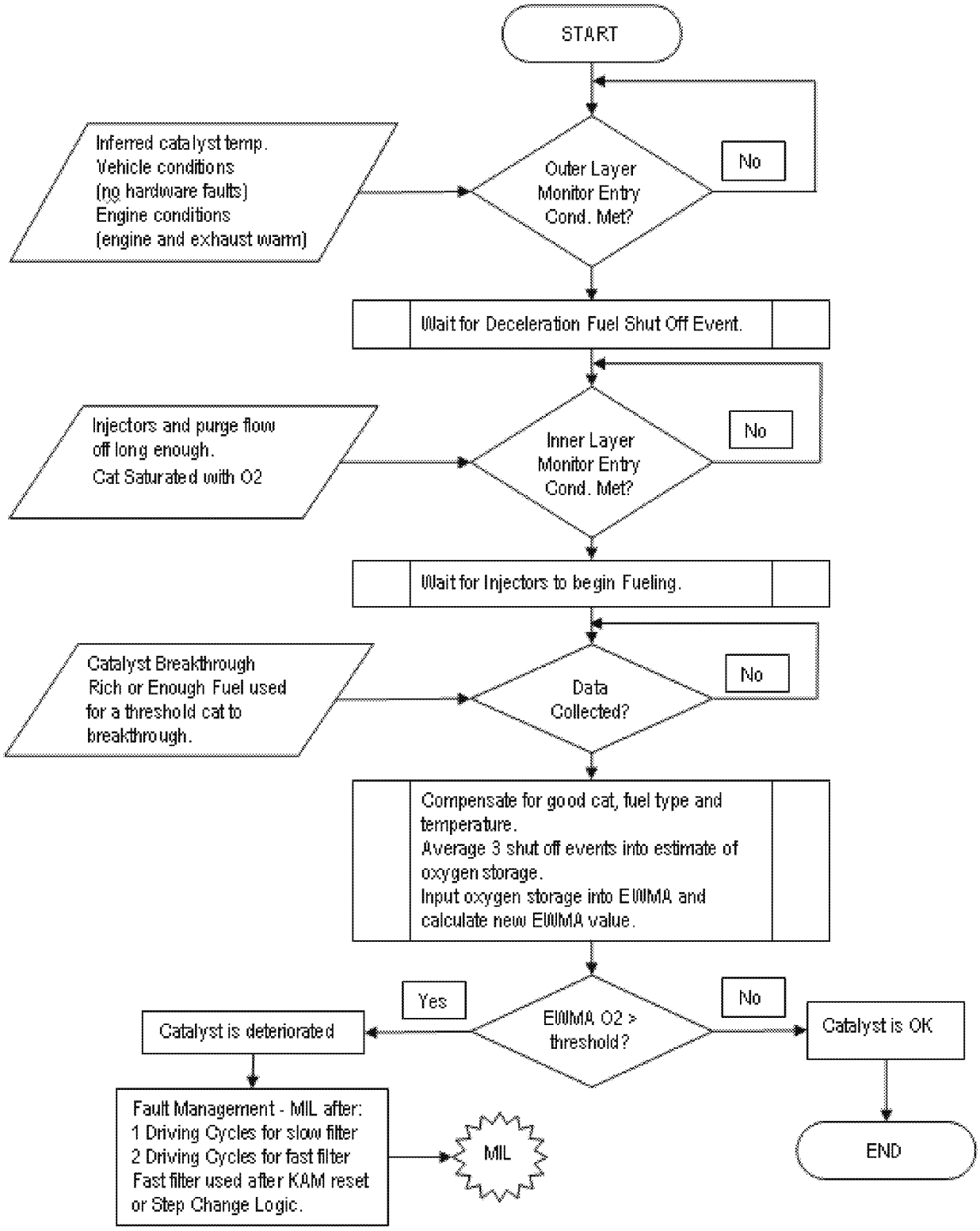

ED_002078G_00001322-00297

CATALYST MONITOR OPERATION:	
DTCs	P0420 Bank 1
Monitor execution	once per driving cycle
Monitor Sequence	HO2S response test complete and no DTCs (P0133/P0153) prior to calculating switch ratio, no SAIR pump stuck on DTCs (P0412/P1414), no evap leak check DTCs (P0442/P0456), no EGR stuck open DTCs (P0402)
Sensors OK	ECT, IAT, TP, VSS, CKP, MAF, no misfire DTCs (P0300, P0310), no ignition coil DTCs (P0351-P0358), no fuel monitor DTCs (P0171, P0172, P0174. P0175), no VCT DTCs (P0010-P0017, P052A, P052B, P0344, P0365, P0369-bank1) (P0018 thru P0025,P052C, P052D, P0349, P0390, P0394- bank2).no evap system DTCs (P0443, P0446, P0455, P0457, P1450), no ETC system DTCs (P0122, P0123, P0222, P0223, P02135) (P2101, P2107, P2111, P2112) (P0600, P060A, P060B, P060C, P061B, P061C, P061D, P1674, U0300).
Monitoring Duration	Approximately 700 seconds during appropriate FTP conditions (approximately 100 to 200 oxygen sensor switches are collected) for switching O2 control sensors Approximately 10 to 20 seconds for wide range O2 index ratio monitor. 3 Decel Fuel Cutoff events for IAF catalyst monitor

TYPICAL IAF CATALYST MONITOR ENTRY CONDITIONS:		
Entry condition	Minimum	Maximum
Engine Coolant Temp	125 °F	220 °F
Intake Air Temp	20 °F	140 °F
Inferred catalyst mid-bed temperature	800 °F	1590 °F
Fuel Level	15%	
Air Mass		4.0 lb/min
Minimum inferred rear O2 sensor temperature	800 °F	
Fuel monitor learned within limits	98%	102%
Rear O2 sensor rich since last monitor attempt	0.45 volts	
Rear O2 sensor lean with injectors off (voltage needed to enter monitor)		0.1 volts
Rear O2 sensor reads rich after fuel turned back on (voltage needed to complete monitor)	0.45 volts	

TYPICAL MALFUNCTION THRESHOLDS:
Catalyst monitor index ratio > 0.75 (bank monitor)

ED_002078G_00001322-00298

Mode $06 reporting for IAF Catalyst Monitor

The catalyst monitor results are converted to a ratio for Mode $06 reporting to keep the same look and feel for the service technician. The equation for calculating the Mode $06 monitor result is:

1 – (Actual reactivation fuel/ Good catalyst reactivation fuel)

Good catalyst reactivation fuel is intended to represent what the monitor would measure for a green catalyst.

J1979 CATALYST MONITOR MODE $06 DATA			
Monitor ID	Test ID	Description for CAN	
$21	$80	Bank 1 index-ratio and max. limit	unitless

** NOTE: In this document, a monitor or sensor is considered OK if there are no DTCs stored for that component or system at the time the monitor is running.

ED_002078G_00001322-00299

Misfire Monitor

The HEV uses the Low Data Rate misfire monitor. The LDR system is capable of meeting "full-range" misfire monitoring requirements on 4-cylinder engines. The software allows for detection of any misfires that occur 6 engine revolutions after initially cranking the engine. This meets the new OBD-II requirement to identify misfires within 2 engine revolutions after exceeding the warm drive, idle rpm.

Low Data Rate System

The LDR Misfire Monitor uses a low-data-rate crankshaft position signal, (i.e. one position reference signal at 10 deg BTDC for each cylinder event). The PCM calculates crankshaft rotational velocity for each cylinder from this crankshaft position signal. The acceleration for each cylinder can then be calculated using successive velocity values. The changes in overall engine rpm are removed by subtracting the median engine acceleration over a complete engine cycle. The crankshaft acceleration is then processed by two algorithms. The first is optimized for detection of sporadic and single cylinder patterns of misfire; the second is optimized for multi-cylinder patterns. The resulting deviant cylinder acceleration values are used in evaluating misfire in the "General Misfire Algorithm Processing" section below.

Generic Misfire Algorithm Processing

The acceleration that a piston undergoes during a normal firing event is directly related to the amount of torque that cylinder produces. The calculated piston/cylinder acceleration value(s) are compared to a misfire threshold that is continuously adjusted based on inferred engine torque. Deviant accelerations exceeding the threshold are conditionally labeled as misfires. A threshold multiplier is used during startup CSER to compensate the thresholds for the reduction in signal amplitude during spark retard conditions.

The calculated deviant acceleration value(s) are also evaluated for noise. Normally, misfire results in a non-symmetrical loss of cylinder acceleration. Mechanical noise, such as rough roads or high rpm/light load conditions, will produce symmetrical, positive acceleration variations. A noise limit is calculated by applying a negative multiplier to the misfire threshold. If the noise limit is exceeded, a noisy signal condition is inferred and the misfire monitor is suspended for a brief interval. Noise-free deviant acceleration exceeding a given threshold is labeled a misfire.

The number of misfires is counted over a continuous 200 revolution and 1000 revolution period. (The revolution counters are not reset if the misfire monitor is temporarily disabled such as for negative torque mode, etc.) At the end of the evaluation period, the total misfire rate and the misfire rate for each individual cylinder is computed. The misfire rate evaluated every 200 revolution period (Type A) and compared to a threshold value obtained from an engine speed/load table. This misfire threshold is designed to prevent damage to the catalyst due to sustained excessive temperature (1650°F for Pt/Pd/Rh advanced washcoat and 1800°F for Pd-only high tech washcoat). If the misfire threshold is exceeded and the catalyst temperature model calculates a catalyst mid-bed temperature that exceeds the catalyst damage threshold, the MIL blinks at a 1 Hz rate while the misfire is present. If the misfire occurs again on a subsequent driving cycle, the MIL is illuminated.

If a single cylinder is determined to be consistently misfiring in excess of the catalyst damage criteria, the fuel injector to that cylinder will be shut off for 30 seconds to prevent catalyst damage. Up to two cylinders may be disabled at the same time on 6 and 8 cylinder engines and one cylinder is disabled on 4 cylinder engines. This fuel shut-off feature is used on all engines starting in the 2005 MY. After 30 seconds, the injector is re-enabled. If misfire on that cylinder is again detected after 200 revs (about 5 to 10 seconds), the fuel injector will be shut off again and the process will repeat until the misfire is no longer present. Note that ignition coil primary circuit failures (see CCM section) will trigger the same type of fuel injector disablement.

The misfire rate is also evaluated every 1000 rev period and compared to a single (Type B) threshold value to indicate an emission-threshold malfunction, which can be either a single 1000 rev exceedence from startup or four subsequent 1000 rev exceedences on a drive cycle after start-up. Some vehicles will set a P0316 DTC if the Type B malfunction threshold is exceeded during the first 1,000 revs after engine startup. This DTC is normally stored in addition to the normal P03xx DTC that indicates the misfiring cylinder(s). If misfire is detected but cannot be

ED_002078G_00001322-00300

attributed to a specific cylinder, a P0300 is stored. This may occur on some vehicles at higher engine speeds, for example, above 3,500 rpm.

Profile Correction

"Profile correction" software is used to "learn" and correct for mechanical inaccuracies in the crankshaft position wheel tooth spacing. Since the sum of all the angles between crankshaft teeth must equal 360°, a correction factor can be calculated for each misfire sample interval that makes all the angles between individual teeth equal. . The LDR misfire system learns one profile correction factor per cylinder (ex. 4 correction factors for a 4 cylinder engine), while the HDR system learns 36, 40 or 60 correction factors depending on the number of crankshaft wheel teeth (ex. 35 for some V6/V8 engines, 39 for V10 engines, 58 for some I4/V6 engines).

The corrections are calculated from several engine cycles of misfire sample interval data. The correction factors are the average of a selected number of samples. In order to assure the accuracy of these corrections, a tolerance is placed on the incoming values such that an individual correction factor must be repeatable within the tolerance during learning. This is to reduce the possibility of learning bad corrections due to crankshaft velocity disturbances.

To prevent any fueling or combustion differences from affecting the correction factors, learning is done during decel-fuel cutout. This can be done during closed-throttle, non-braking, de-fueled decelerations in the 60 to 40 mph range after exceeding 60 mph (likely to correspond to a freeway exit condition). In order to minimize the learning time for the correction factors, a more aggressive decel-fuel cutout strategy may be employed when the conditions for learning are present and are typically learned in a single 60 to 40 MPH deceleration, but can be learned during up to 3 such decelerations, or over a higher number of shorter duration decelerations..

For Hybrid Electric Vehicles profile is learned by using the electric drive to spin the crankshaft on the first engine shutdown during which time profile is calculated.

Since inaccuracies in the wheel tooth spacing can produce a false indication of misfire, the misfire monitor is not active until the corrections are learned. In the event of battery disconnection or loss of Keep Alive Memory the correction factors are lost and must be relearned. If the software is unable to learn a profile after three 60 to 40 mph decels, or for HEV's after 6 failed attempts to learn, a P0315 DTC is set.

Neutral Profile Correction and Non-Volatile Memory

Neutral profile learning is used at End of Line to learn profile correction via a series of one or more neutral engine rpm throttle snaps. This allows the Misfire Monitor to be activated at the Assembly Plant. A Test Tool command is required to enable this method of learning, so this method will only be performed by a Plant or Service technician. Learning profile correction factors at high-speed (3,000 rpm) neutral conditions versus during 60-40 mph decels optimizes correction factors for higher rpms where they are most needed and eliminates driveline/transmission and road noise effects. This improves signal to noise characteristics which means improved detection capability.

The profile correction factors learned at the Assembly Plant are stored into non-volatile memory. This eliminates the need for specific customer drive cycles. However, misfire profiles may need to be relearned in the Service Bay using a service procedure if major engine work is done or the PCM is replaced. (Re-learning is not required for a reflash.)

The engine shutdown profile learning algorithm has been left active in the software as a backup.

ED_002078G_00001322-00301

Low Data Rate and High Data Rate Systems

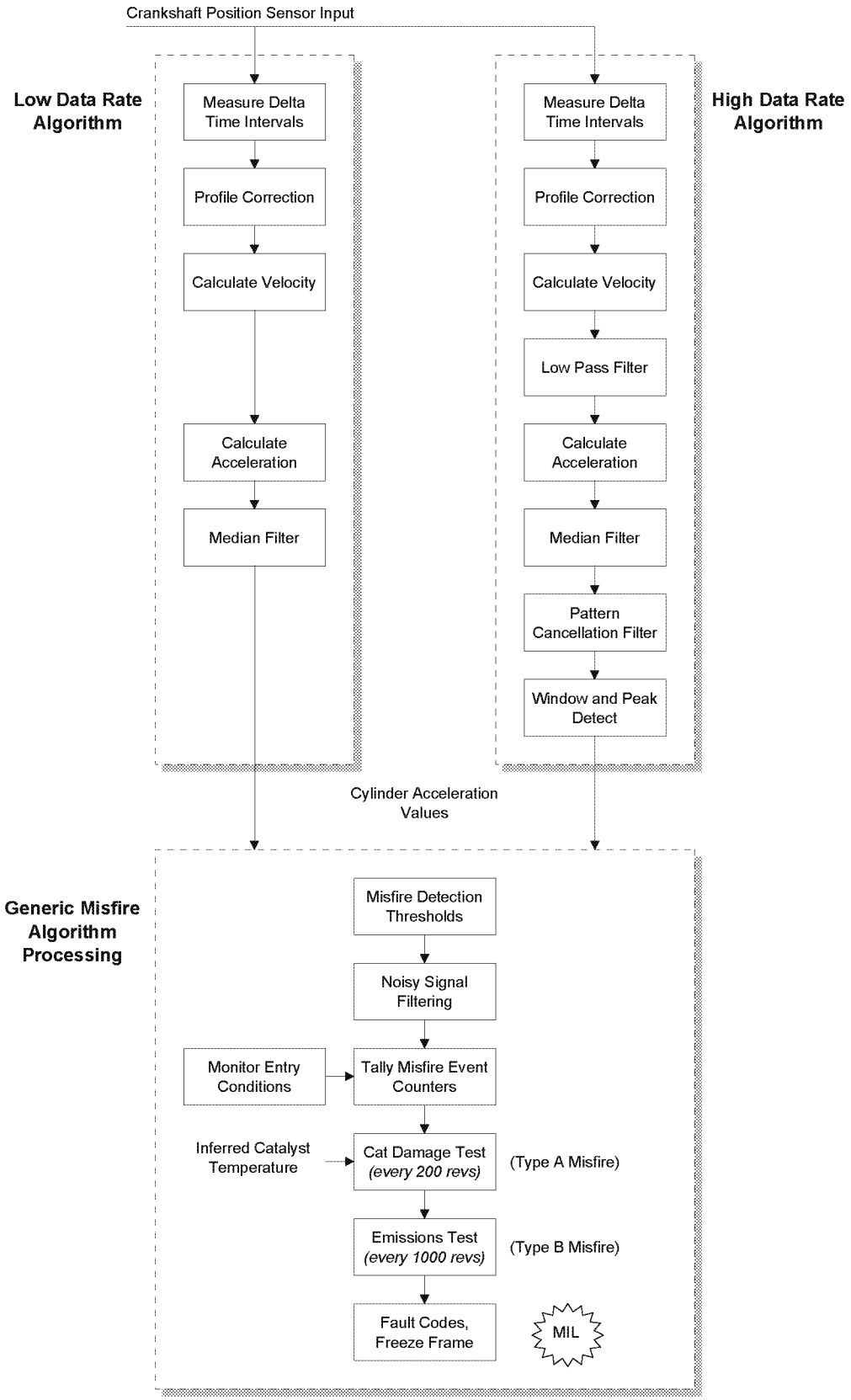

ED_002078G_00001322-00302

Misfire Monitor Operation:	
DTCs	P0300 to P0304 (general and specific cylinder misfire) P0315 (unable to learn profile) P0316 (misfire during first 1,000 revs after start-up) P1336 (unable to synch CKP and CMP signals)
Monitor execution	Continuous, misfire rate calculated every 200 or 1000 revs
Monitor Sequence	None
Sensors OK	CKP, CMP, MAF, ECT/CHT
Monitoring Duration	Entire driving cycle (see disablement conditions below)

Typical misfire monitor entry conditions:		
Entry condition	Minimum	Maximum
Time since engine start-up	0 seconds	0 seconds
Engine Coolant Temperature	20 °F	250 °F
RPM Range (Full-Range Misfire certified, with 2 rev delay)	2 revs after exceeding 150 rpm below “drive” idle rpm	5900 rpm
Profile correction factors learned in NVRAM	Yes	
Fuel tank level	15%	

Typical misfire temporary disablement conditions:
Temporary disablement conditions:
Closed throttle decel (negative torque, engine being driven) > -100 ft lbs
Fuel shut-off due to vehicle-speed limiting or engine-rpm limiting mode
High rate of change of torque (heavy throttle tip-in or tip out) > -1024 deg/sec or 1023 deg/sec; > -200 ft lbs/sec or > 200 ft lbs/sec

Typical misfire monitor malfunction thresholds:
Type A (catalyst damaging misfire rate): misfire rate is an rpm/load table ranging from 20% at idle to 5% at high rpm and loads
Type B (emission threshold rate): 0.89%

ED_002078G_00001322-00303

J1979 Misfire Mode $06 Data			
Monitor ID	Test ID	Description for CAN	
A1	$80	Total engine misfire and catalyst damage misfire rate (updated every 200 revolutions)	percent
A1	$81	Total engine misfire and emission threshold misfire rate (updated every 1,000 revolutions)	percent
A1	$82	Highest catalyst-damage misfire and catalyst damage threshold misfire rate (updated when DTC set or clears)	percent
A1	$83	Highest emission-threshold misfire and emission threshold misfire rate (updated when DTC set or clears)	percent
A1	$84	Inferred catalyst mid-bed temperature	^{o}C
A2 – AD	$0B	EWMA misfire counts for last 10 driving cycles	events
A2 – AD	$0C	Misfire counts for last/current driving cycle	events
A2 – AD	$80	Cylinder X misfire rate and catalyst damage misfire rate (updated every 200 revolutions)	percent
A2 – AD	$81	Cylinder X misfire rate and emission threshold misfire rate (updated every 1,000 revolutions)	percent

ED_002078G_00001322-00304

Evap Monitor Overview

For 2013 MY, a new family of Hybrid Electric Vehicles (HEV) will be introduced. Some of these vehicles will be able to charge the battery by plugging the vehicle into the grid as well as using an engine –driven generator and regenerative brakes to charge the battery while driving (Plug in Hybrid Electric Vehicles (PHEV)); others will only be using an engine –driven generator and regenerative brakes to charge the battery while driving (Hybrid Electric Vehicles (HEV)). For both types of vehicle, depending on the vehicle drive cycle, there could be very little or no engine operation during the driving cycle. This poses a challenge as historically, evaporative system leak diagnostics has relied on engine vacuum to evacuate the fuel tank and perform a large portion of the leak check and purge flow diagnostics. Additionally, the Engine Off Natural Vacuum (EONV) test that runs after key off relies on a exhaust system to heat up underbody components and reject heat into the fuel tank. It is the cooling of the fuel in the tank that generates the vacuum that enables to EONV test to perform the 0.020" leak check. If the engine does not run, both of the current engine-running and engine –off evap system diagnostics are not feasible.

In spite of this, the OBD-II regulations still require manufacturers to monitor the evaporative system for leaks and to perform a functional purge flow check. One solution is to add a vacuum pump that can generate vacuum on demand to facilitate the evaporative system diagnostics. The system that is being used is manufactured by the Denso Corporation and is called Evaporative Leak Check Module (ELCM).

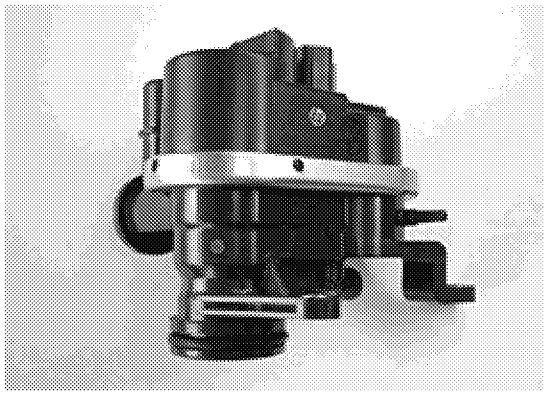

The ELCM consists of a vacuum pump, an absolute pressure sensor, a 0.020" reference orifice and a change-over valve (COV). The 0.020" reference orifice is used to obtain a 0.020" reference every time the monitor is run. This reference check becomes the threshold for passing or failing a 0.020" leak. Since the threshold is dynamically established at the beginning of the test, many of the noise/control factors (e.g. fuel level, ambient temperature, barometric pressure) are accounted for. The ELCM system is illustrated below:

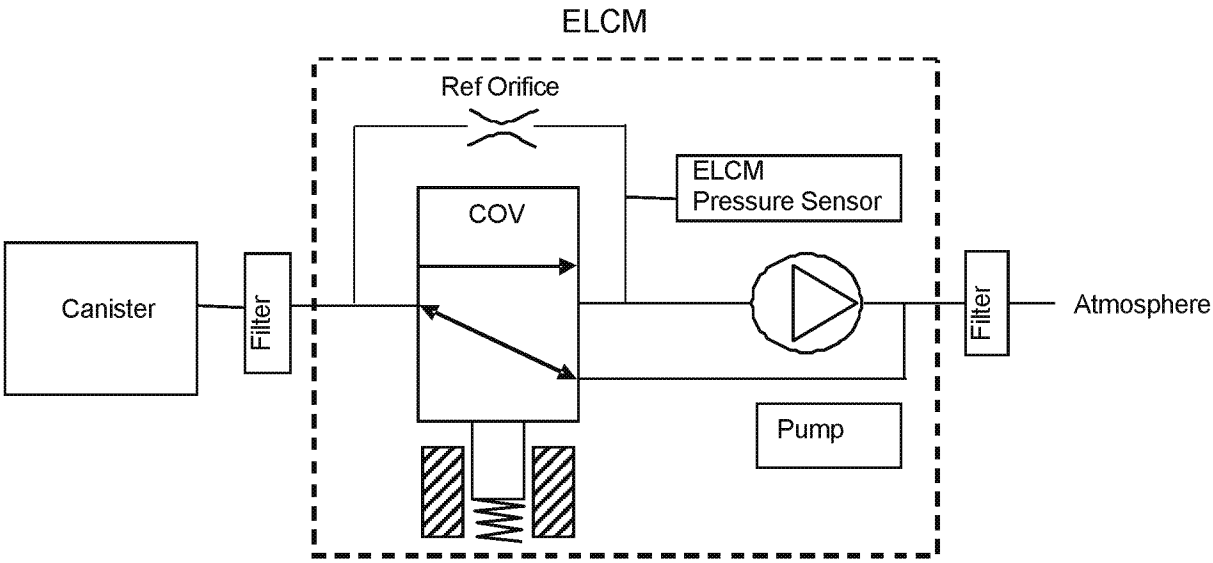

During normal operation, the ELCM is vented to atmosphere through the COV. This allows for purging during engine operation as well as fuel fill. During ELCM leak detection execution, the vacuum pump is turned on. With the pump on, vacuum is drawn across the reference orifice and the ensuing vacuum level becomes the threshold for pass/fail criteria. Once the reference is established, it is time to perform the actual leak testing. This is accomplished by energizing the COV and turning on the vacuum pump. Depending on the volume of the evaporative system being evacuated, it could take anywhere from 2 to15 minutes for the vacuum level to saturate. Once saturation vacuum is reached, the vacuum level is compared against the vacuum level when the reference check was performed. Vacuum levels lower than the reference check are considered to be fails and vacuum levels above the reference check are considered to be passes. The diagrams below illustrate this.

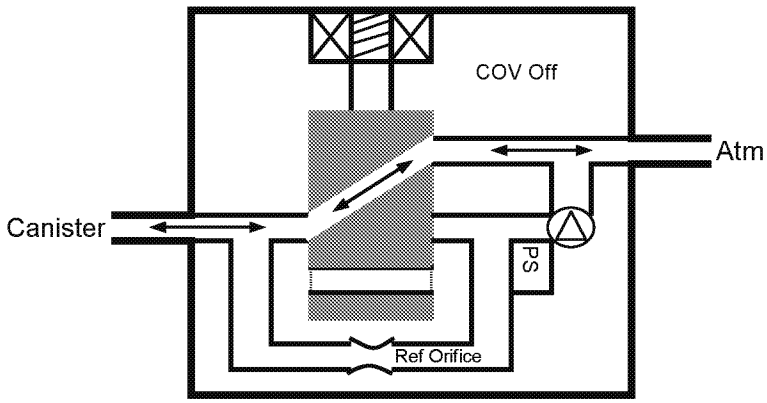

Typical purge flow/fuel fill configuration. Yellow denotes the vacuum/pressure path.

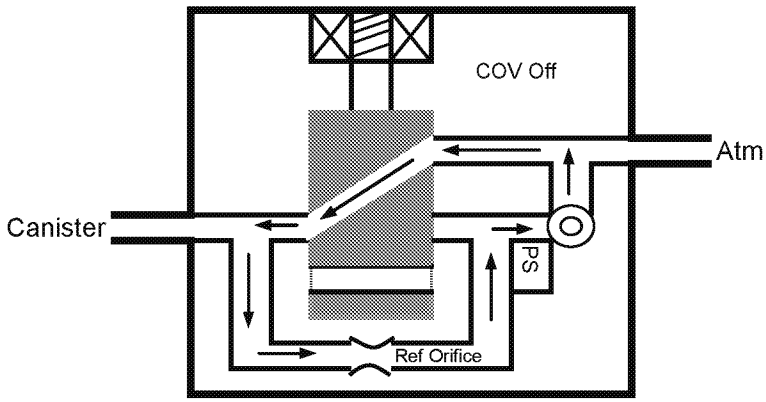

Typical reference check configuration (Pump ON). Yellow denotes the vacuum path.

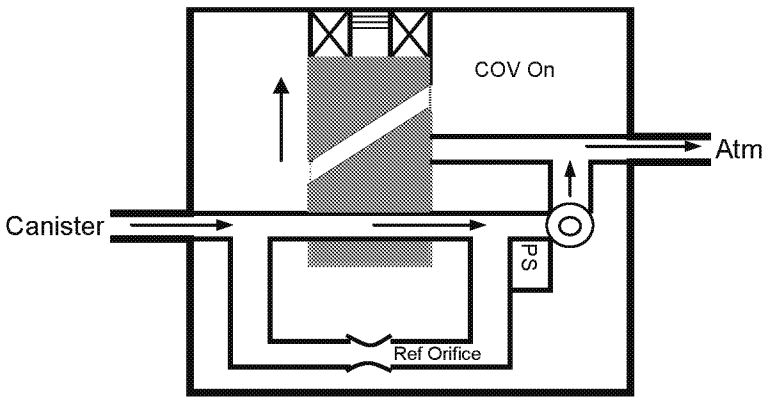

Typical system leak check configuration (Pump On, COV On). Yellow denotes the vacuum path.

ED_002078G_00001322-00306

Below is a typical plot of a test sequence. First, a reference check is obtained. The system is then relieved back to atmosphere before the COV is energized and the pump is turned on again. If the resulting vacuum signal crosses below the reference check line, then the system is deemed to be leak-free. If the vacuum signal "flat lines" above the reference check line, then the system is determined to have a leak > 0.020".

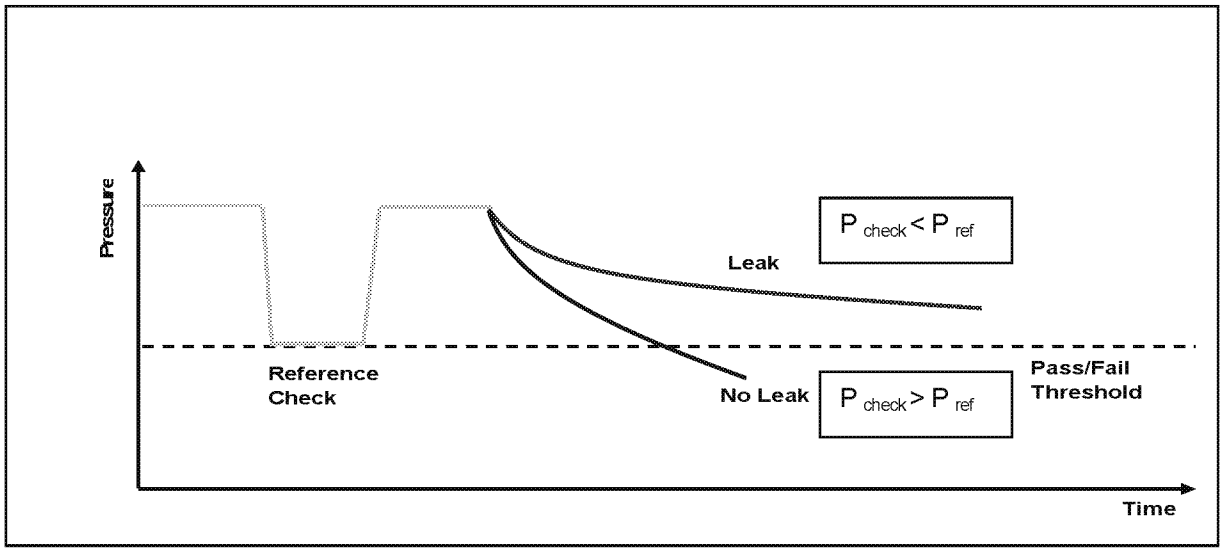

The ELCM leak detection test runs at key off if entry conditions such as vehicle soak, fuel level, ambient temperature, BARO, etc. are satisfied. The test sequence begins with a pump warm-up time of 5 minutes followed by a reference check calculation. Once the reference check is obtained, the pump is turned off which allows the vacuum to equalize to atmosphere. The changeover valve is then energized and the Evap system is evacuated. The pump stays on until the vacuum crosses the reference check threshold or the vacuum trace flat-lines above the reference check threshold.

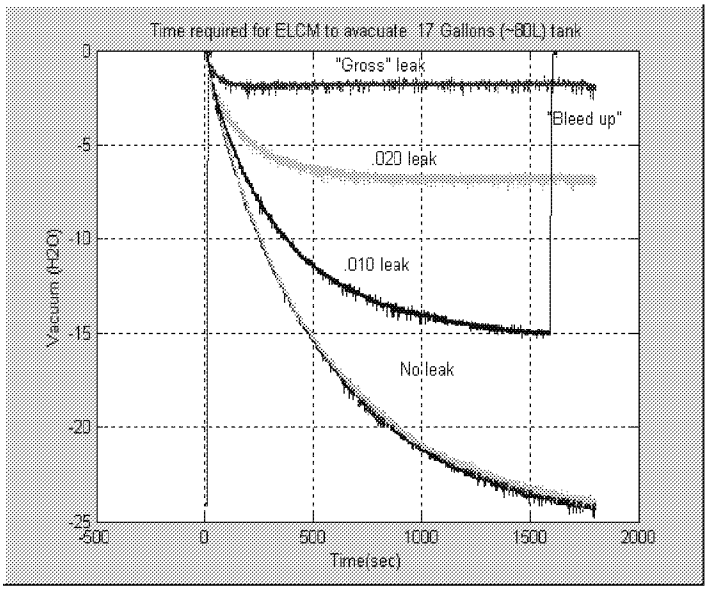

In addition to running leak diagnostics, the evap monitor also performs numerous functional tests on the individual components that are used for the evap leak check, (i.e., stuck open/closed COV, stuck on/stuck off pump, restricted orifice, stuck open/stuck closed Fuel Tank Isolation Valve, stuck closed Canister Purge Valve) The monitor runs once per drive cycle during a key off condition and increments the Evap System IUMPR numerator once the ghost monitor completes. Rate based completion frequency (IUMPR) is reported via J1979 Mode$09. The ELCM system is used in sealed (PHEV) and non-sealed (HEV) evap systems. Although the algorithm between sealed and non-sealed applications differs slightly (sealed system has FTIV while non-sealed has VBV), the leak detection method remains the same.

ED_002078G_00001322-00307

Fuel Systems Hardware – Sealed (PHEV) vs non-Sealed (HEV)

HEVs use a traditional non-sealed evaporative system. This is because the engine is expected to run for extended periods of time on an HEV so fuel vapors will get purged on a regular basis.

- Uses traditional Canister Purge Valve (CPV)
- Uses traditional Vapor Blocking Valve (VBV)
- Uses traditional (low pressure) Fuel Tank Pressure Transducer (FTPT)
- ELCM replaces Canister Vent Valve (CVV).
- VBV de-energized state is open

Plug in HEVs (PHEV) use a sealed evaporative system. The sealed fuel system is designed to contain fuel vapors while not refueling. This is because the engine may not run for extended periods of time on a PHEV so fuel vapors do not get purged on a regular basis. Internally, the sealed system is known as a NIRCOS (Non-Integrated Refueling Canister Only System).

- Canister sized for refueling vapors only
- Uses a structurally improved steel fuel tank
- Tank pressure relief at -2.5 psi and 5.5 psi
- Requires an electric refueling system to relieve the pressure in the tank
- Uses traditional Canister Purge Valve (CPV)
- Uses High Pressure Fuel Tank Pressure Transducer (HPFTPT)
- Uses Fuel Tank Isolation Valve (FTIV) in place of Vapor Blocking Valve (VBV)
- FTIV de-energized state is closed
- When FTIV is closed, it splits the evap system into two separately diagnosable system – the "fuel tank side" and the "fresh air side"

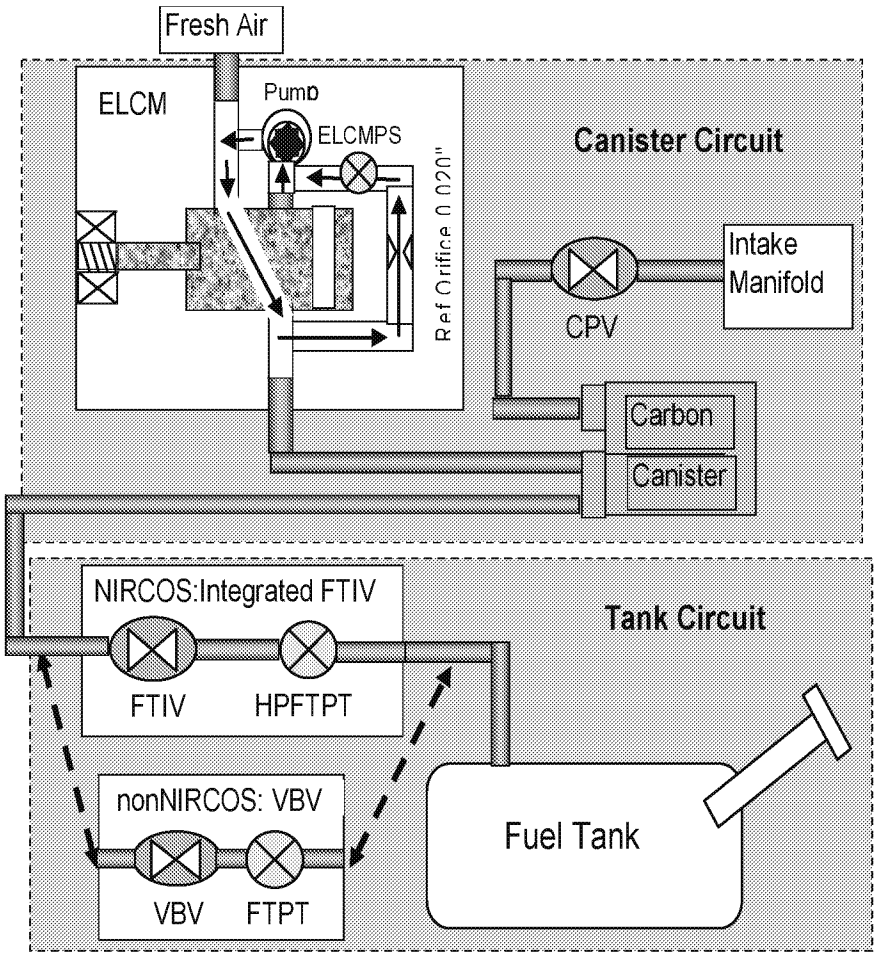

[redacted]

ED_002078G_00001322-00308

EVAP System Monitor – Engine Running Diagnostics

The EVAP diagnostics can be split into two categories:

Engine Running Diagnostics (HEV and PHEV), consisting of:
- A purge flow/gross leak (P04ED)
- Excessive vacuum (P1450)
- Fresh air line blockage (P144B)
- Canister Purge Valve component checks (P0443)
- Vapor Blocking Valve stuck open (P2450) (HEV only)

Engine Off (After-run) Diagnostics, consisting of:
- The 0.020" /0.040" leak check
- All other EVAP system and component diagnostics are executed during the engine off period.

The engine running diagnostics are described below:

The **Canister Purge Valve (CPV)** output circuit is checked for opens and shorts (P0443)

Note that a stuck closed CPV generates a P04ED, a leaking or stuck open CPV generates a P1450.

Canister Purge Valve Circuit Check Operation:	
DTCs	P0443 – Evaporative Emission System Purge Control Valve "A" Circuit
Monitor execution	engine running, continuous
Monitor Sequence	None
Sensors OK	not applicable
Monitoring Duration	5 seconds to obtain smart driver status

Typical Canister Purge Valve Circuit Check malfunction thresholds:
P0443: open/shorted

ED_002078G_00001322-00309

This test checks to see if the fresh air line to ELCM unit is clogged or restricted. The fresh air line flow test is performed with the engine running, the Change Over Valve (COV) off and purge flow commanded on.

Fresh Air Line Flow Check Operation:	
DTCs	P144B - EVAP System Secondary Purge Vapor Line Restricted/Blocked
Monitor execution	engine running, once per driving cycle
Monitor Sequence	P1450 completed and OK
Sensors/Components OK	P0456, P0457, P24B9, P24BA, P24BB, P0100, P0102, P0103, P0106, P0107, P0108, P0720 P0452, P0453, P0454, P24BC, P0452, P0453, P0454, P24C1, P24C0, P2402, P2450, P0443, P2418, P2402, P2401, P2227, P2228, P2229
Monitoring Duration	

Fresh Air Line Flow Check entry conditions		
Entry condition	Minimum	Maximum
Air Mass	> 0 lbs/min	
Vehicle Speed (vehicle speed sensor OK)	0 mph	
BARO (<8,000 ft altitude)	22.0 " Hg	
Battery Voltage	11 volts	18 volts
Closed loop fuel control (HO2S sensors OK)		
Purge Flow	0.04 lbm/min	
Manifold Vacuum	2.0 in Hg	
COV commanded open		
ELCM absolute pressure change from power up value	60 inH_2O	
VBV/FTIV Closed		
ELCM BARO Updated		

Typical Fresh Air Line Flow Check malfunction thresholds:
Relative vacuum at ELCM < -20.0 inH2O / 4981.78 Pa OR
Absolute vacuum at ELCM > 60 inH2O / 14945.3 Pa

J1979 Fresh Air Line Flow Check Mode $06 Data			
Monitor ID	Comp ID	Description for CAN	Units
$3D	$85	Blocked EVAP System Fresh Air Line	Pa
Note: Default values (0.0) will be displayed for all the above TIDs if the evap monitor has never completed. The appropriate TID will be updated based on the current or last driving cycle, default values will be displayed for any phases that have not completed.			

ED_002078G_00001322-00310

This test is a functional check on the HEV for excessive leakage through the EVAP Switching Valve (Vapor Blocking Valve) when it is commanded closed. It runs during the flow test during engine running. This test only completes on the full hybrid. The Plug In hybrid tests the FTIV during the key off ELCM monitor.

EVAP Switching Valve Functional Check Operation:	
DTCs	P2450 – EVAP System Switching Valve Performance/Stuck Open
Monitor execution	engine running, once per driving cycle
Monitor Sequence	P1450 not running
Sensors/Components OK	P0456, P0457, P24B9, P24BA, P24BB, P0100, P0102, P0103, P0106, P0107, P0108, P0720, P0452, P0453, P0454, P24BC, P0452, P0453, P0454, P24C1, P24C0, P2402, P2450, P0443, P2418, P2402, P2401, P2227, P2228, P2229
Monitoring Duration	4 sec

EVAP Switching Valve Functional Check entry conditions		
Entry condition	Minimum	Maximum
Vapor Blocking Valve (VBV) commanded closed		
Air Mass	> 0 lbs/min	
Vehicle Speed (vehicle speed sensor OK)	0 mph	
Intake Air Temperature	40 deg F	95 deg F
Fuel Level	15%	85%
BARO (<8,000 ft altitude)	22.0 " Hg	
Battery Voltage	11 volts	18 volts
Purge Flow	0.08 lbm/min	
Manifold Vacuum	2.0 in Hg	
Relative ELCM Pressure	-99 in H_2O	
Time Since Last Abort	20 sec	
Closed loop fuel control (HO2S sensors OK)		
Tank Pressure	-50 In$H_2$0	125 InH_2O
ELCM BARO Updated		
ELCM absolute pressure change from power up value	60 InH_2O	

Typical EVAP Switching Valve Functional Check malfunction thresholds:
ELCM pressure sensor rate of change during flow test > 20.0 inH_2O / 4981.78 Pa

ED_002078G_00001322-00311

J1979 EVAP Switching Valve Functional Mode $06 Data			
Monitor ID	Comp ID	Description for CAN	Units
$3D	$82	Vapor Blocking Valve Performance	Pa
$3D	$86	Fuel Tank Isolation Valve Stuck Open	Pa/sec
$3D	$87	Fuel Tank Isolation Valve Stuck Closed	Pa/sec
Note: Default values (0.0) will be displayed for all the above TIDs if the evap monitor has never completed. The appropriate TID will be updated based on the current or last driving cycle, default values will be displayed for any phases that have not completed.			

This is a functional check for a stuck open canister purge valve. This generates too much vacuum during the purge flow test

EVAP Flow Check Operation:	
DTCs	P1450 – Unable to Bleed Up Fuel Tank Vacuum
Monitor execution	engine running, once per driving cycle
Monitor Sequence	
Sensors/Components OK	P0456, P0457, P24B9, P24BA, P24BB, P0100, P0102, P0103, P0106, P0107, P0108, P0720, P0452, P0453, P0454, P24BC, P0452, P0453, P0454, P24C1, P24C0, P2402, P2450, P0443, P2418, P2402, P2401, P2227, P2228, P2229
Monitoring Duration	5 sec

EVAP Flow Check entry conditions		
Entry condition	Minimum	Maximum
Purge Flow		0.0 lbm/min
Manifold Vacuum	2.0 in Hg	
BARO (<8,000 ft altitude)	22.0 " Hg	
Battery Voltage	11 volts	18 volts
FTIV or VBV commanded closed		
COV commanded closed		
Closed loop fuel control (HO2S Sensors OK)		
Relative ELCM Pressure	-99 in H_2O	
Tank Pressure	-50 InH20	125 InH2O
Fuel Level	15%	85%
Intake Air Temperature	20 deg F	95 deg F
ELCM BARO Updated		
Power up Time	5 sec	15 sec
Time since purge off	4 sec	
Engine speed	200 rpm	

ED_002078G_00001322-00312

Typical EVAP Flow Check malfunction thresholds:
Relative vacuum at ELCM > -10.0 inH_2O / -2490.89 Pa.

J1979 EVAP Flow Check Functional Mode $06 Data			
Monitor ID	Comp ID	Description for CAN	Units
$3D	$83	Purge Valve Stuck Open	Pa
$3D	$84	Purge Valve Stuck Closed	Pa
Note: Default values (0.0) will be displayed for all the above TIDs if the evap monitor has never completed. The appropriate TID will be updated based on the current or last driving cycle, default values will be displayed for any phases that have not completed.			

ED_002078G_00001322-00313

This test is a functional check for purge flow. With Change Over Valve (COV) and purge commanded on, if not enough delta vacuum is seen by the ELCM in calibrated time then the P04ED DTC will set.

EVAP Large Leak Functional Check Operation:	
DTCs	P04ED – EVAP System Large Leak Detected – Fresh Air Side
Monitor execution	engine running, once per driving cycle
Monitor Sequence	P1450 not running
Sensors/Components OK	P0456, P0457, P24B9, P24BA, P24BB, P0100, P0102, P0103, P0106, P0107, P0108, P0720, P0452, P0453, P0454, P24BC, P0452, P0453, P0454, P24C1, P24C0, P2402, P2450, P0443, P2418, P2402, P2401, P2227, P2228, P2229
Monitoring Duration	4 seconds

EVAP Large Leak Functional Check entry conditions		
Entry condition	Minimum	Maximum
Vapor Blocking Valve (VBV) commanded closed		
Air Mass	> 0 lbs/min	
Vehicle Speed (Vehicle speed sensors OK)	0 mph	
Intake Air Temperature	20 deg F	95 deg F
Fuel Level	15%	85%
BARO (<8,000 ft altitude)	22.0 " Hg	
Battery Voltage	11 volts	18 volts
Purge Flow	0.08 lbm/min	
Manifold Vacuum	2.0 in Hg	
Relative ELCM Pressure	-99 in H_2O	
Time Since Last Abort	20 sec	
Tank Pressure	-50 InH20	125 InH2O
ELCM BARO Updated		
Closed loop fuel control (HO2S Sensors OK)		
ELCM absolute pressure change from power up value	60 InH2O	

Typical EVAP Large Leak Functional Check malfunction thresholds:
Relative vacuum at ELCM < 8.0 inH_2O / < 1992.71 Pa for > 4 seconds.

J1979 EVAP Flow Check Functional Mode $06 Data			
Monitor ID	Comp ID	Description for CAN	Units
$3D	$83	Purge Valve Stuck Open	Pa
$3D	$84	Purge Valve Stuck Closed	Pa
Note: Default values (0.0) will be displayed for all the above TIDs if the evap monitor has never completed. The appropriate TID will be updated based on the current or last driving cycle, default values will be displayed for any phases that have not completed.			

ELCM Leak Detection 0.020" Monitor Entry Conditions

Engine Off and Key Off (After-run) Diagnostics, consisting of:

- The 0.020" leak check
- All other EVAP system and component diagnostics are executed during the engine off period.

Note: there is a "Wait" period after key-off to ensure that ELCM pump temperature is within the specified operating temperature. The "Wait" time is a function of ambient temperature (5 – 17 min).

The entry conditions for the engine off monitor are evaluated while the vehicle is being driven, prior to shut down. Basic entry conditions for the leak diagnostics are a combination of conditions mandated by CARB and others intended to make the monitor robust to false calls.

Phase 0: BARO Reference/ELCM Functional Tests

The first phase starts by obtaining a BARO reading. The PCM opens the CPV and vents any trapped vacuum. After some stabilization time, with all the ELCM actuators in their unpowered state, the monitor obtains a BARO reading.

Then the ELCM pump is turned on (COV not energized) to send flow through the reference orifice. If the slope of the ELCMPS pressure is less than a threshold value, then the monitor tentatively infers that the COV is stuck in the energized state and flow is not going through the reference orifice. This will set a P24C0 unless the pump functional test fails later in the test. Once the COV functional test is complete, the orifice functional test is performed. The stabilized ELCMPS pressure is compared to a threshold value to see if too much vacuum was produced. This would be an indication of a clogged/restricted orifice. In this case, the monitor aborts and a P043E DTC is set. The stabilized ELCMPS pressure is compared to a threshold value to see if too little vacuum was produced. This would be an indication of a high flow orifice. In this case, the monitor aborts and a P043F DTC is set. The last part of Phase 0 is the pump warm-up time (typically 5 min). Once the warm-up time is met, the ELCMPS pressure is compared against a threshold to determine how much vacuum was generated across the orifice during the warm-up time. Too little vacuum is an indication that the pump is stuck off in which case the monitor aborts and sets P2401 DTC. If all tests pass, monitor goes on to Phase 1.

Note: The ELCMPS sensor is an absolute sensor whereas the HPFTPT is a relative sensor. To compare the two sensors, the ELCMPS signal is converted to gauge by subtracting the BARO reading.

Phase 1: 1st Reference Pressure Measurement

In Phase 1, the resulting ELCMPS relative pressure is averaged and stored as a 0.020" reference. This 1st reference check is compared against a table of min and max reference pressures as a function of BARO. If the reference pressure is outside the min and max, the monitor aborts and sets a P24B9 DTC. Then, the vacuum pump is commanded off and the ELCMPS pressure is compared to atmospheric pressure. If the ELCMPS pressure does not go back up above a threshold pressure, the monitor infers that the vacuum pump is stuck on, aborts and sets a P2402 DTC. Otherwise, the monitor continues on with the next phase provided that the vacuum dissipates back near atmospheric pressure. Failure to dissipate the vacuum is indicative of blockages. The monitor aborts and next time the flow test runs, it should flag a blocked fresh air line.

Phase 2: Vacuum Pull/Leak Detection

Phase 2 is the most critical phase in the ELCM monitor. This is where the Evap system (canister side only or the entire system) is evacuated using the ELCM vacuum pump. The COV as well as the vacuum pump are turned on. The COV stuck functional test is performed again to check whether the COV is stuck in the de-energized position. The rate of change of the ELCMPS pressure is compared to a threshold. The monitor aborts and set a P24C1 DTC if the ELCMPS vacuum slope is too high. If the COV test passes, the monitor goes on to check the FTIV valve for being stuck open. The rate of change of the ELCMPS pressure is calculated again and compared to a threshold. If the slope is too low, the FTIV is inferred to be stuck open and the monitor aborts and sets a P2450

ED_002078G_00001322-00315

DTC. If the FTIV had been commanded open and the rate of change of the ELCMPS pressure is greater than a threshold, then the FTIV is inferred to be stuck closed and the monitor aborts and sets a P2451 DTC.

Once the functional tests are complete, the monitor goes on perform the leak check using the averaged, stabilized pressure. Leak test results are normalized to the reference pressure obtained in Phase 1. A normalized pressure greater than the 0.020" leak threshold (> 1.0) is a pass. For HEV, the test goes on to Phase 5. For PHEV, the test goes on to Phase 3

The monitor periodically computes the slope of the pressure value. If the slope indicates that the signal is "flat lining" without crossing the reference check threshold, the determination is that a leak is present, pending the vapor generation analysis. If the signal "flat lines" for an HEV, the monitor sets a preliminary P0456 failure flag and goes to Phase 5. For a PHEV, if the signal "flat lines", the monitor sets a preliminary P04EF failure flag indicating a leak on the fresh air side of the Evap system and the test goes on to Phase 3.

Phase 3: Tank Pressure Evaluation (PHEV only, sealed evap system)

In Phase 3, the filtered tank pressure is evaluated to determine whether the tank is leak-free or not. If there is sufficient pressure or vacuum buildup in the tank and the pressure/vacuum variation in the tank is low, the tank is properly sealed and there are no leaks. In such a case, the FTIV is left in its normally closed position and only the canister side of the Evap system is monitored for leaks. If the tank pressure/vacuum is near atmosphere or if the tank pressure/vacuum is high but has considerable variation, then the FTIV is commanded open and the entire Evap system is monitored for leaks. The monitor goes back to phase 2 to evacuate the entire Evap system.

If the monitor fails with the FTIV open, a fail flag is set to indicate a potential leak in the entire Evap system (P04EE).

There are no abort conditions in this phase. Note that there is a delay to allow the pressure to stabilize to atmospheric pressure between the tank and canister side checks.

Phase 4: Vapor Generation/CPV Stuck Closed (PHEV only, seal evap system)

This is the phase where the full Evap system is diagnosed for vapor generation in the case where a failure occurred in the second Phase 2 while the FTIV was open. Vapor generation for the fuel results in a positive pressure build up. It is typically caused by high RVP fuels and/or hot weather. The positive pressure can overwhelm the vacuum being generated by the low flow ELCM pump. Depending on the magnitude of the vapors, an otherwise sealed Evap system could be diagnosed as having a leak; therefore, the vapor generation check is needed to qualify any leak monitor fail calls.

The vapor generation routine is based on the ideal gas law. The temperature is assumed to be constant during the duration of the test. The volume is also assumed constant since the PHEV evap system uses a rigid, metal fuel tank. Any pressure change is, therefore, due to fuel vapors. Phase 4 starts out by turning off the vacuum pump and commands the COV to its vent position. With the FTIV open, the system is allowed to vent to atmosphere until the pressure climbs to near atmosphere or times out. In the case of a timeout, the tank is assumed to have intense vapors whereby even when it is open to atmosphere, the pressure is unable to equalize with atmospheric pressure. Once the vented tank pressure is close to atmosphere, the FTIV is closed and the tank is sealed for a calibrated time period. A positive pressure buildup more than a threshold value results in an abort and discarding the fail call (i.e. a "no call"). In the case of a "pass" call in phase 2, the vapor generation test is not run.

Phase 5: 2nd Reference Pressure Measurement

This is the final phase in the ELCM monitor. The purpose of this phase is to validate that the 1st reference check is accurate by obtaining a 2nd reference check and comparing the two. After some stabilization time, another BARO reading is obtained and compared to the first BARO reading. If the BARO readings do not match within a calibrated limit, the monitor aborts. If the BARO readings are consistent, the monitor continues by turning on the vacuum pump for a calibrated warm-up time. The 2nd reference check is compared against a table of min and max reference pressures as a function of BARO. If the reference pressure is outside the min and max, the monitor

ED_002078G_00001322-00316

aborts and sets a P24B9 DTC. If the reference check is OK, then the 1st and 2nd reference checks are compared to each other. If they disagree by more than a calibrated limit, then the monitor aborts and sets a P24B9 DTC. If the BARO readings and reference pressures are reliable, then any evap system failures determined previously are confirmed.

NOTE – When the monitor passes, execution does not end. A “ghost” monitor continues to execute as if a failure had been detected. The ghost monitor is time based and executes to the maximum allowable time allotted for the “leak” failure case.

ED_002078G_00001322-00317

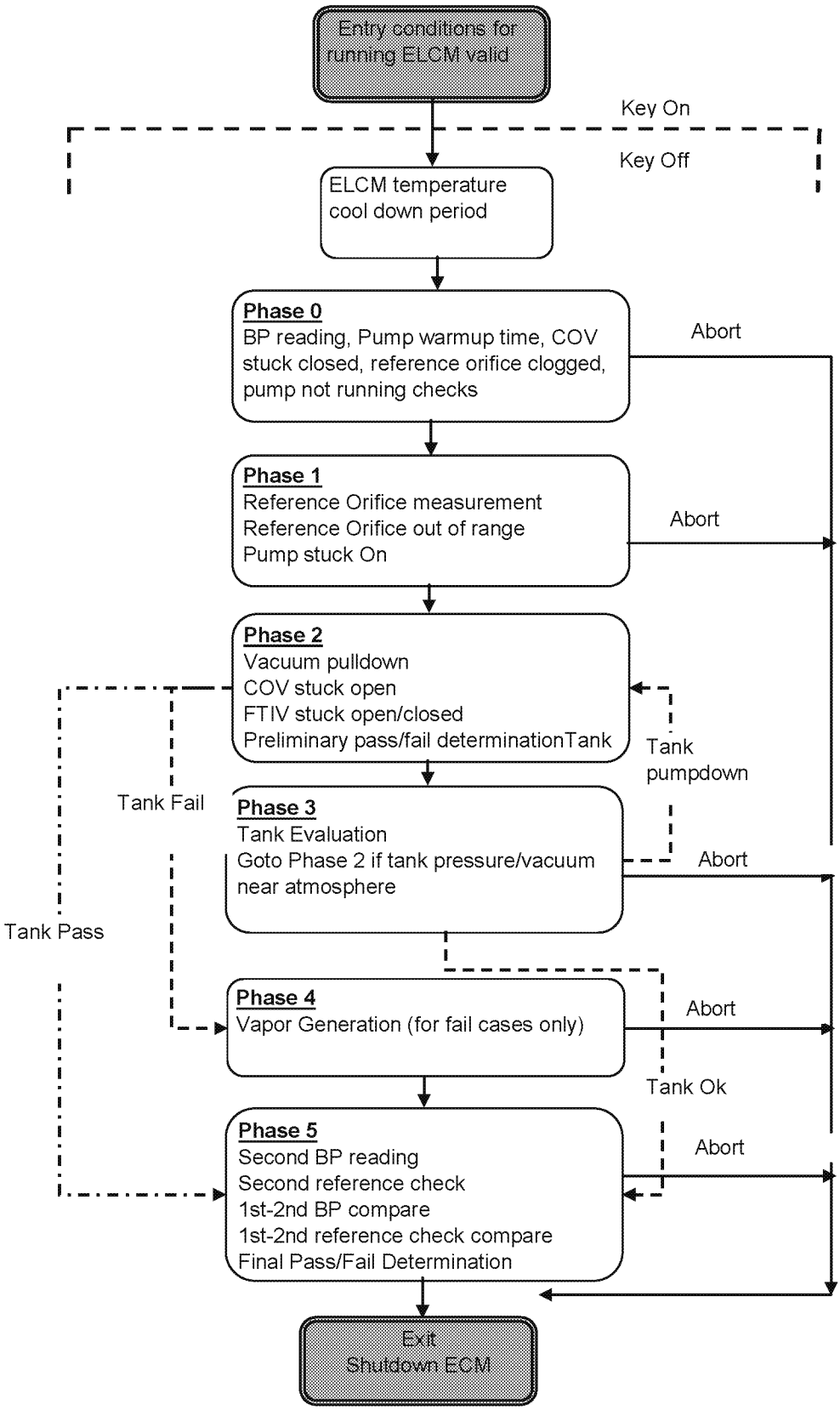
Entry conditions for running ELCM valid
Key On
Key Off
ELCM temperature cool down period
Phase 0
BP reading, Pump warmup time, COV stuck closed, reference orifice clogged, pump not running checks
Abort
Phase 1
Reference Orifice measurement
Reference Orifice out of range
Pump stuck On
Abort
Phase 2
Vacuum pulldown
COV stuck open
FTIV stuck open/closed
Preliminary pass/fail determinationTank
Tank pumpdown
Tank Fail
Phase 3
Tank Evaluation
Goto Phase 2 if tank pressure/vacuum near atmosphere
Abort
Tank Pass
Phase 4
Vapor Generation (for fail cases only)
Abort
Tank Ok
Phase 5
Second BP reading
Second reference check
1st-2nd BP compare
1st-2nd reference check compare
Final Pass/Fail Determination
Abort
Exit
Shutdown ECM

0.020" ELCM EVAP Monitor Operation:	
DTCs	P0456 – EVAP System Very Small Leak Detected (HEV) P0457 – EVAP System Leak Detected (fuel cap loose/off) (HEV/PHEV) P04EE – EVAP System Very Small Leak Detected – Fuel Tank Side (PHEV) P04EF – EVAP System Very Small Leak Detected – Fresh Air Side (PHEV)
Monitor execution	Once per key-off when entry conditions are met during drive.
Monitor Sequence	none
Sensors/Components OK	P0443, P2418, P24BE, P24BF, P2401, P2402, P144B, P04ED, P1450, P24BA, P24BB, P0451, P0452, P0453, P0454, P2610, P0112, P0113, P043E, P043F, P24C0, P24C1, P2450, P2451, P24BC, P2610, P0112, P0113
Monitoring Duration	45 minutes in key-off state if fault present.

Typical 0.020" EONV EVAP monitor entry conditions:		
Entry conditions seen just prior to engine off	Minimum	Maximum
ELCM 24 hour run time		60 min
Time Since Pump ran	180 minutes	
Ambient Temperature	40 °F	95 °F
Battery Voltage	11 volts	16 volts
Engine Speed		1 rpm
Vehicle Speed		0.1 mph
Fuel level	15%	85%
Not a refueling event		
BARO	22 in Hg	
Accumulated Aar mass flow summation		1000000000 lbm/min
Delay period in after run	5 min	17 min
Too much time in after run		2300 sec for HEV, 2485 sec for PHEV
Tank pressure	-50 InH2O	125 InH2O

Typical 0.020" ELCM EVAP key-off abort conditions:
Tank pressure > 0.8 " H_20 during the 5 minute key-off stabilization phase (indicates excessive vapor) OR Ignition key on, battery voltage low/high, refueling event, engine speed, shifter not in Park, BARO did not update, tank being vented , any other hardware/circuit fault

ED_002078G_00001322-00319

Typical 0.020 ELCM EVAP monitor malfunction thresholds:
P0456(P04EE/P04EF): (0.020" leak): normalized pressure threshold (relative to reference pressure) < 1.0 AND rate of change of pressure "flat lining" without crossing reference pressure; > 0.0 inH_2O/sec / 0.0 Pa/sec. AND Phase 2 monitor timeout without crossing reference pressure; > 800 sec for full Evap system, 100 sec for fresh air side of PHEV P0457: same as P0456 (P04EE) except that previous driving cycle had a refueling event

J1979 EONV 0.020" EVAP monitor Mode $06 Data			
Monitor ID	Comp ID	Description for CAN	Units
$3C	$84	Phase 3 stabilized leak check - Fuel Tank Side.	Pa
$3C	$85	Phase 3 stabilized leak check - Fresh Air Side	Pa
$3C	$86	ELCM Change-Over-Valve Stuck Open OFF (De-energized state)	Pa/sec
$3C	$87	ELCM Change-Over-Valve Stuck Closed ON (Energized state)	Pa/sec
$3C	$88	ELCM Pump Stuck Off	Pa
$3C	$89	ELCM Pump Stuck On	Pa
$3C	$8A	ELCM Reference Orifice - Clogged, High Flow	Pa
$3C	$8B	ELCM Reference Orifice - Large size, Low Flow	Pa
$3C	$8D	ELCM Reference Pressure Out-of-Range	Pa
Note: Default values (0.0) will be displayed for all the above TIDs if the evap monitor has never completed. The appropriate TID will be updated based on the current or last driving cycle, default values will be displayed for any phases that have not completed.			

ED_002078G_00001322-00320

EVAP System Monitor Engine Off Component Checks

Additional malfunctions that are identified as part of the evaporative system integrity check are as follows:

The **Canister Purge Valve (CPV)** output circuit is checked for opens and shorts (P0443)

Note that a stuck closed CPV generates a P04ED, a leaking or stuck open CPV generates a P1450.

Canister Purge Valve Circuit Check Operation:	
DTCs	P0443 – Evaporative Emission System Purge Control Valve "A" Circuit
Monitor execution	engine off, continuous
Monitor Sequence	None
Sensors OK	not applicable
Monitoring Duration	5 seconds to obtain smart driver status

Typical Canister Purge Valve Circuit Check malfunction thresholds:
P0443: open/shorted

The **Evap Fuel Tank Switching Valve** (EVAPSV) control circuit is checked for opens and shorts (P2418). For the PHEV, this component is the FTIV (Fuel Tank Isolation Valve). For the HEV, this component is the VBV (Vapor Blocking Valve).

Note that a stuck closed Evap Switching Valve generates a P2451; a stuck open Evap Switching Valve generates a P2450.

Evap Switching Valve Check Operation:	
DTCs	P2418 - Evap Switching Valve Circuit
Monitor execution	continuous
Monitor Sequence	None
Sensors OK	not applicable
Monitoring Duration	5 seconds to obtain smart driver status

Evap Switching Valve check malfunction thresholds:
P2418 (Evap Switching Valve Circuit): open/shorted

ED_002078G_00001322-00321

The **ELCM Leak Detection Pump Control Circuit** is checked for opens and shorts and functionally.

ELCM Pump Control Check Operation:	
DTCs	P2401 - EVAP System Leak Detection Pump Control Circuit Low P2402 - EVAP System Leak Detection Pump Control Circuit High
Monitor execution	continuous
Monitor Sequence	None
Sensors OK	not applicable
Monitoring Duration	5 seconds to obtain smart driver status

Typical ELCM Pump Control check malfunction thresholds:
P2401/P2402 - output driver open/shorted

ELCM Pump Control Functional Check Operation:	
DTCs	P2401 - EVAP System Leak Detection Pump Control Circuit Low P2402 - EVAP System Leak Detection Pump Control Circuit High
Monitor execution	during Phase 0 of evap monitor leak check
Monitor Sequence	Evap monitor leak detection condition met
Sensors OK	not applicable
Monitoring Duration	360 seconds in Phase 0, 5 seconds on Phase 1

Typical ELCM Pump Control Functional Check malfunction thresholds:
P2401: pressure at the end of 360 sec of warm-up time in Phase 0 too low; > -2.0 inH_2O / -498.18 Pa.
P2402: pressure increasing in Phase 1 after pump shut off for 5 sec; > 4.0 inH_2O / 996.35 Pa.

ELCM Pump Control Flow Check Operation:	
DTCs	P043E - EVAP System Leak Detection Reference Orifice Low Flow P043F - EVAP System Leak Detection Reference Orifice High Flow
Monitor execution	once per key off, after entry conditions have been met during pre-key off drive cycle
Monitor Sequence	during Phase 0 of evap monitor leak check
Sensors OK	not applicable
Monitoring Duration	60 seconds in Phase 0

Typical ELCM Pump Control flow check malfunction thresholds:
P043E: stabilized pressure at the end of Phase 0 too low <= -20.2 inH_2O / 5031.6 Pa
P043F: stabilized pressure at the end of Phase 0 too high > -2.8 inH_2O / > -697.45 Pa.

The **Evap Leak Detection Pump Vacuum Switching Valve / (Change Over Valve)** control circuit is checked for opens and shorts and functionally.

Evap Vacuum Switching Valve Circuit Check Operation:	
DTCs	P24BE - EVAP Leak Detection Pump Vacuum Switching Valve Control Circuit Low P24BF - EVAP Leak Detection Pump Vacuum Switching Valve Control Circuit High
Monitor execution	continuous
Monitor Sequence	None
Sensors OK	not applicable
Monitoring Duration	5 seconds to obtain smart driver status

Evap Vacuum Switching Valve Circuit Check malfunction thresholds:
P24BE/P24BF - output driver open/shorted

Evap Vacuum Switching Valve Functional Check Operation:	
DTCs	P24C0 - EVAP System Leak Detection Pump Vacuum Switching Valve Stuck On P24C1 - EVAP System Leak Detection Pump Vacuum Switching Valve Performance/Stuck Off
Monitor execution	P24C0 during Phase 0 of evap monitor leak check, P24C1 during Phase 2 of evap monitor leak check
Monitor Sequence	Evap monitor leak detection condition met
Sensors OK	P0443, P2418, P24BE, P24BF, P2401, P2402, P144B, P04ED, P1450, P24BA, P24BB, P0451, P0452, P0453, P0454, P2610, P0112, P0113, P043E, P043F, P24C0, P24C1, P2450, P2451 P24BC, P2610, P0112, P0113
Monitoring Duration	65 seconds in Phase 0, 2 seconds in Phase 2

Evap Vacuum Switching Valve check malfunction thresholds:
P24C0: rate of change of pressure too low; < 1.2 inH_2O / 174.36 Pa P24C1: rate of change of pressure too high; > 4.0 inH2O / 996.35 Pa.

ED_002078G_00001322-00323

The **EVAP System Leak Detection Pump Pressure Sensor** input circuit is checked for opens and shorts, out of range values and noisy readings.

Leak Detection Pump Pressure Sensor Check Operation:	
DTCs	P24BA - EVAP System Leak Detection Pump Pressure Sensor Circuit Low P24BB - EVAP System Leak Detection Pump Pressure Sensor Circuit High P24B9 - EVAP System Leak Detection Pump Pressure Sensor Circuit Range/Performance P24BC - EVAP System Leak Detection Pump Pressure Sensor Circuit Intermittent (noisy)
Monitor execution	continuous
Monitor Sequence	None
Sensors OK	not applicable
Monitoring Duration	20 seconds for electrical malfunctions, 10 seconds for noisy sensor test

Typical Leak Detection Pump Pressure Sensor check malfunction thresholds:
P24BA (Circuit low): < 168.96 in$H_2$0 / 42.08 kPa.
P0453 (Circuit high): > 496.93 in$H_2$0 / 123.78 kPa.
P24B9 (Reference out of range) > -1.5 to -5.5 in H_2O (function of BARO) OR < -17.5 to -21.5 in H_2O (function of BARO)
P24BC (noisy): open circuit, short circuit or > 25.0 inH_2O / 6.227 kPa change between samples, sampled every 100 milliseconds, filtered fault level of 25% will set code in 10 seconds

The **Fuel Tank Pressure Sensor** input circuit is checked for out of range values (P0452 short, P0453 open), noisy readings (P0454 noisy) and an offset (P0451 offset).

Note that for the PHEV, this component is the FTPTHP (Fuel Tank Pressure Transducer – High Pressure). For the HEV, this component is the FTPT (Fuel Tank Pressure Transducer).

Fuel Tank Pressure Sensor Transfer Function		
FTP volts = [Vref * (0.14167 * Tank Pressure) + 2.6250] / 5.00		
Volts	A/D Counts in PCM	Fuel Tank Pressure, Inches H_2O
0.100	20	-17.82
0.500	102	-15.0
1.208	247	-10.0
2.625	464	0
3.475.	712	6.0
4.750	973	15.0
4.90	1004	16.06

High Pressure Fuel Tank Pressure Sensor Transfer Function		
FTP volts = [Vref * (0.015 * Pump Pressure) + 1.15] / 5.00		
Volts	A/D Counts in PCM	Fuel Tank Pressure, Inches H_2O
0.25	51	-60.0
0.50	102	-43.33
1.15	235	0.00
2.05	419	60.00
3.00	614	123.33
4.50	921	223.33
4.75	970	240.0

Fuel Tank Pressure Sensor Check Operation:	
DTCs	P0452 – Fuel Tank Pressure Sensor Circuit Low P0453 – Fuel Tank Pressure Sensor Circuit High P0454 – Fuel Tank Pressure Sensor Intermittent/Erratic (noisy)
Monitor execution	continuous
Monitor Sequence	None
Sensors OK	not applicable
Monitoring Duration	5 seconds for electrical malfunctions, 10 seconds for noisy sensor test

ED_002078G_00001322-00325

Typical Fuel Tank Pressure Sensor check malfunction thresholds:
P0452 (Fuel Tank Pressure Sensor Circuit Low): < -17.82 in H_2O
P0452 (High Pressure Fuel Tank Pressure Sensor Circuit Low): < -60.00 in H_2O
P0453 (Fuel Tank Pressure Sensor Circuit High): > 16.06 in H_2O
P0453 (High Pressure Fuel Tank Pressure Sensor Circuit High): > 2401.00 in H2O
P0454 (Fuel Tank Pressure Sensor Circuit Noisy): open circuit, short circuit or > 25 in H_2O change between samples, sampled every 100 milliseconds, filtered fault level of 25% will set code in 10 seconds

Fuel Tank Pressures Sensor Offset Check Operation	
DTCs	P0451(HEV Only) – Fuel Tank Pressure Sensor Range/Performance (offset)
Monitor execution	once per driving cycle
Monitor Sequence	No P0443 or P1450, P2402, , P2450, P2451, P2418, P24BF, P24C0 DTCs
Sensors OK	not applicable
Monitoring Duration	< 1 second

Typical Fuel Tank Pressure Sensor Offset Check Entry Conditions:		
Entry condition	Minimum	Maximum
Ignition key on, engine off, engine rpm		0 rpm
Purge Duty Cycle		0%
Engine off (soak) time	240 min	
Fuel Tank Pressure Sensor Variation during test		0.5 in H_2O
Battery Voltage	11.0 Volts	
Not a refueling event		
Tank pressure	-17.8 InH_2O	16 InH_2O

Typical Fuel Tank Pressure Sensor Offset Check Malfunction Thresholds:
Fuel tank pressure at key on, engine off is 0.0 in H_2O +/- 1.7 in H_2O

ED_002078G_00001322-00326

The **Fuel Level Input** is checked for out of range values (opens/ shorts). The FLI input is obtained from the serial data link from the instrument cluster. If the FLI signal is open or shorted, the appropriate DTC is set, (P0462 circuit low and P0463 circuit high).

Finally, the Fuel Level Input is checked for noisy readings. If the FLI input changes from an in-range to out-of-range value repeatedly, a P0461 DTC is set.

Fuel Level Input Check Operation:	
DTCs	P0460 – Fuel Level Sensor A Circuit P0461 – Fuel Level Sensor A Circuit Noisy P0462 – Fuel Level Sensor A Circuit Low P0463 – Fuel Level Sensor A Circuit High
Monitor execution	continuous
Monitor Sequence	None
Sensors OK	not applicable
Monitoring Duration	30 seconds for electrical malfunctions

Typical Fuel Level Input check malfunction thresholds:
P0460 or P0462 (Fuel Level Input Circuit Low): < 5 ohms (< 1 A/D count)
P0460 or P0463 (Fuel Level Input Circuit High): > 200 ohms (>1022 A/D counts)
P0461 (Fuel Level Input Noisy): > 40% change between samples, > 100 occurrences, sampled every 0.100 seconds

The FLI signal is also checked to determine if it is stuck. "Fuel consumed" is continuously calculated based on PCM fuel pulsewidth summation as a percent of fuel tank capacity. (Fuel consumed and fuel gauge reading range are both stored in KAM and reset after a refueling event or DTC storage.) If the there is an insufficient corresponding change in fuel tank level, a P0460 DTC is set.

Different malfunction criteria are applied based on the range in which the fuel level sensor is stuck.

In the range between 6% and 93%, a 17.5% difference between fuel consumed.

In the range below 6%, a 27.5% difference between fuel consumed.

In the range above 93%, a 80.5% difference between fuel consumed.

Fuel Level Input Stuck Check Operation:	
DTCs	P0460 – Fuel Level Input Circuit Stuck
Monitor execution	Continuous
Monitor Sequence	None
Sensors OK	not applicable
Monitoring Duration	Between 6 and 93%, monitoring can take from100 to 120 miles to complete

Typical Fuel Level Input Stuck check malfunction thresholds:
P0460 (Fuel Level Input Stuck):
Fuel level stuck at greater than 93%: > 80.5% difference in calculated fuel tank capacity consumed versus change in fuel level input reading
Fuel level stuck at less than 6%: > 27.5% difference in calculated fuel tank capacity consumed versus change in fuel level input reading
Fuel level stuck between 6% and 93%: > 17.5% difference in calculated fuel tank capacity consumed versus change in fuel level input reading

ED_002078G_00001322-00328

PHEV Re-Fueling System

The PHEV uses a pressurized evap system. In order to refuel the vehicle, the customer needs to push a fuel door button in the cabin. This allows the PCM to both open a latch on the spring-loaded fuel fill door on the outside of the vehicle to provide access to the fuel filler inlet and open an FTIV (Fuel Tank Isolation Valve) which vents the evap system to the canister and allows refueling fuel vapors to enter the canister.

If the FTIV is not open, the evap system will vent when the customer pushes the fuel fill nozzle into the fuel fill inlet and the customer will not be able to refuel the vehicle because the displaced vapors have no where to go).

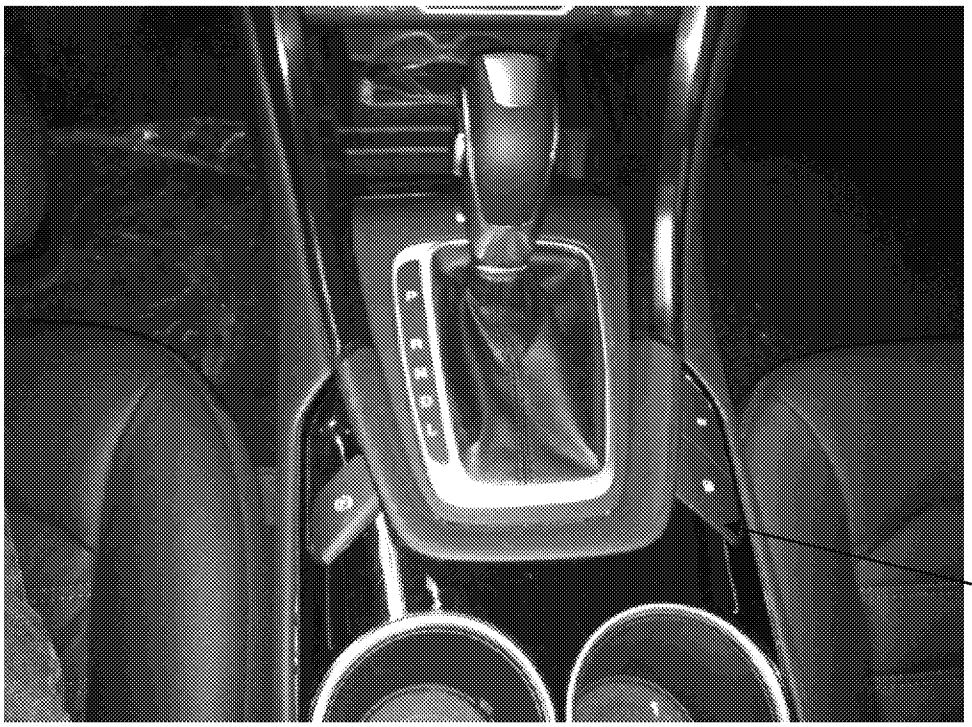

Refueling Process:

- Customer presses “refuel button”
- Signal is sent from BCM to PCM
- PCM opens FTIV & reads FTPT
- PCM sends cluster message “Please wait to refuel”
- Once fuel pressure is relieved, PCM unlocks fuel door solenoid.
- PCM sends cluster message “Ready to Refuel”
- Customer dispenses fuel
- Customer closes fuel door
- PCM recognizes closed fuel door by switch state
- FTIV closes

Mechanical Fail Safe Mode:

- Customer presses “refuel button”
- Customer activates mechanical override of locking solenoid
- PCM recognizes fuel door is open by switch position
- Continue from "Refueling Process", third item (PCM opens FTIV & reads FTPT.

ED_002078G_00001322-00329

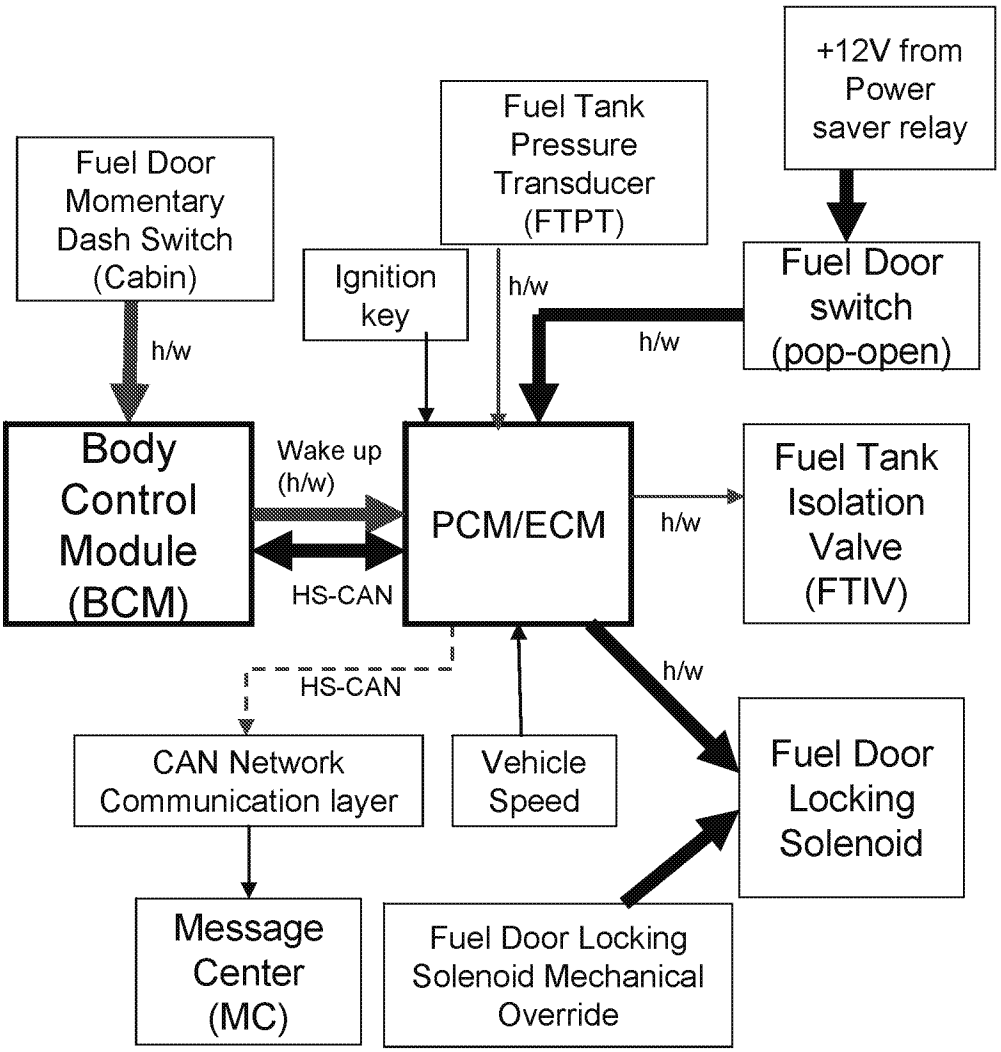

ED_002078G_00001322-00330

The **Fuel Door Switch** is checked for opens and shorts and functionally.

Fuel Door Switch Check Operation:	
DTCs	P04BA - Fuel Fill Door Position Sensor / Switch Circuit High P04B5 - Fuel Fill Door Stuck Open
Monitor execution	continuous, engine off
Monitor Sequence	After refueling is requested, P04B5 after refueling is completed
Sensors OK	not applicable
Monitoring Duration	5 seconds

Typical Fuel Door Switch check malfunction thresholds:
P04BA: 1) Shorted to battery (door closed). Fuel door opens after unlock solenoid is energized but no indication to PCM. No indication to PCM to close FTIV after refueling. FTIV stays open longer than required. FTIV will close after timeout period. FTIV closes if vehicle starts to move > 7 mph or after 20 minutes. 2) Mechanically stuck (door closed). Fuel door opens after unlock solenoid is energized but no indication to PCM. No indication to PCM to close FTIV after refueling. FTIV stays open longer than required. FTIV will close after timeout period. FTIV closes if vehicle starts to move > 7 mph or after 20 minutes. 3) Mechanically stuck latched. Customer cannot refuel vehicle
P04B5: 1) Mechanically stuck (door open) or customer did not close fuel door. No indication to close FTIV after refueling. FTIV will stay open, evap system not a closed system any more, requires MIL.

The **Cabin Refuel Switch** is checked for opens and shorts and functionally.

Cabin Refuel Switch Check Operation:	
DTCs	P04C9 - Fuel Fill Door Open Request Sensor / Switch Performance / Stuck Off. P04CD - Fuel Fill Door Open Request Sensor / Switch Performance / Stuck On. U0140 – Lost Communication With Body Control Module U0442 – Invalid Data Received from Body Control Module
Monitor execution	continuous, engine off, > 5 mph for P04CD
Monitor Sequence	After refueling is requested
Sensors OK	not applicable
Monitoring Duration	5 seconds

Cabin Refuel Switch check malfunction thresholds:
P04C9: 1) Circuit shorted to battery. No request to open fuel door or FTIV. Customer cannot refuel vehicle without using manual override. Once door is open, system works as designed. 2) Circuit open. No request to open fuel door or FTIV. Customer cannot refuel vehicle without using manual override. Once door is open, system works as designed. 3) Button mechanically stuck not depressed. No request to open fuel door or FTIV. Customer cannot refuel vehicle without using manual override. Once door is open, system works as designed.
P04CD: 1) Circuit shorted to ground. Always requesting vent and fuel door unlock when vehicle is stopped and in park or neutral with park brake activated. FTIV will close after timeout period. Once door is open, system works as designed. 2) Button mechanically stuck depressed. Always requesting vent and fuel door unlock when vehicle is stopped and in park or neutral with park brake activated. FTIV will close after timeout period. Once door is open, system works as designed.
U0140/U422: 1) CAN message between BCM and PCM missing or invalid. No request to open fuel door or FTIV. Customer cannot refuel vehicle without using manual override. Once door is open, system works as designed.

The **Fuel Fill Door Unlock Control Circuit** is checked for opens and shorts and functionally.

Fuel Fill Door Unlock Control Check Operation:	
DTCs	P04C2 - Fuel Fill Door Unlock Control Circuit High P04C1 - Fuel Fill Door Unlock Control Circuit Low
Monitor execution	continuous, engine off
Monitor Sequence	After refueling is requested
Sensors OK	not applicable
Monitoring Duration	5 seconds

Fuel Fill Door Unlock Control check malfunction thresholds:
P04C2: 1) Circuit shorted to power. (fuel door latched). Customer cannot refuel vehicle without using manual override. Once door is open, system works as designed.
P04C1: 1) Circuit shorted to ground. (fuel door unlatched). Fuel door always unlatched. Potential for fuel spit back if customer refuels without pushing cabin refuel button (not likely) 2) Circuit open (fuel door latched). Customer cannot refuel vehicle without using manual override.

Fuel System Monitor

The adaptive fuel strategy uses O2 sensors for fuel feedback. The fuel equation includes short and long term fuel trim modifiers:

$$\text{FUEL MASS} = \frac{\text{AIR MASS} * \text{SHRTFT} * \text{LONGFT}}{\text{EQUIV_RATIO} * 14.64}$$

Where:

Fuel Mass = desired fuel mass
Air Mass = measured air mass, from MAF sensor
SHRTFT = Short Term Fuel Trim, calculated
LONGFT = Long Term Fuel Trim, learned table value, stored in Keep Alive Memory
EQUIV_RATIO = Desired equivalence ratio, 1.0 = stoich, > 1.0 is lean, < 1.0 is rich
14.64 = Stoichiometric ratio for gasoline

A conventional O2 sensor (not a wide-range sensor) can only indicate if the mixture is richer or leaner than stoichiometric. During closed loop operation, short term fuel trim values are calculated by the PCM using oxygen sensor inputs in order to maintain a stoichiometric air/fuel ratio. The PCM is constantly making adjustments to the short term fuel trim, which causes the oxygen sensor voltage to switch from rich to lean around the stoichiometric point. As long as the short term fuel trim is able to cause the oxygen sensor voltage to switch, a stoichiometric air/fuel ratio is maintained.

When initially entering closed loop fuel, SHRTFT starts 1.0 and begins adding or subtracting fuel in order to make the oxygen sensor switch from its current state. If the oxygen sensor signal sent to the PCM is greater than 0.45 volts, the PCM considers the mixture rich and SHRTFT shortens the injector pulse width. When the cylinder fires using the new injector pulse width, the exhaust contains more oxygen. Now when the exhaust passes the oxygen sensor, it causes the voltage to switch below 0.45 volts, the PCM considers the mixture lean, and SHRTFT lengthens the injector pulse width. This cycle continues as long as the fuel system is in closed loop operation.

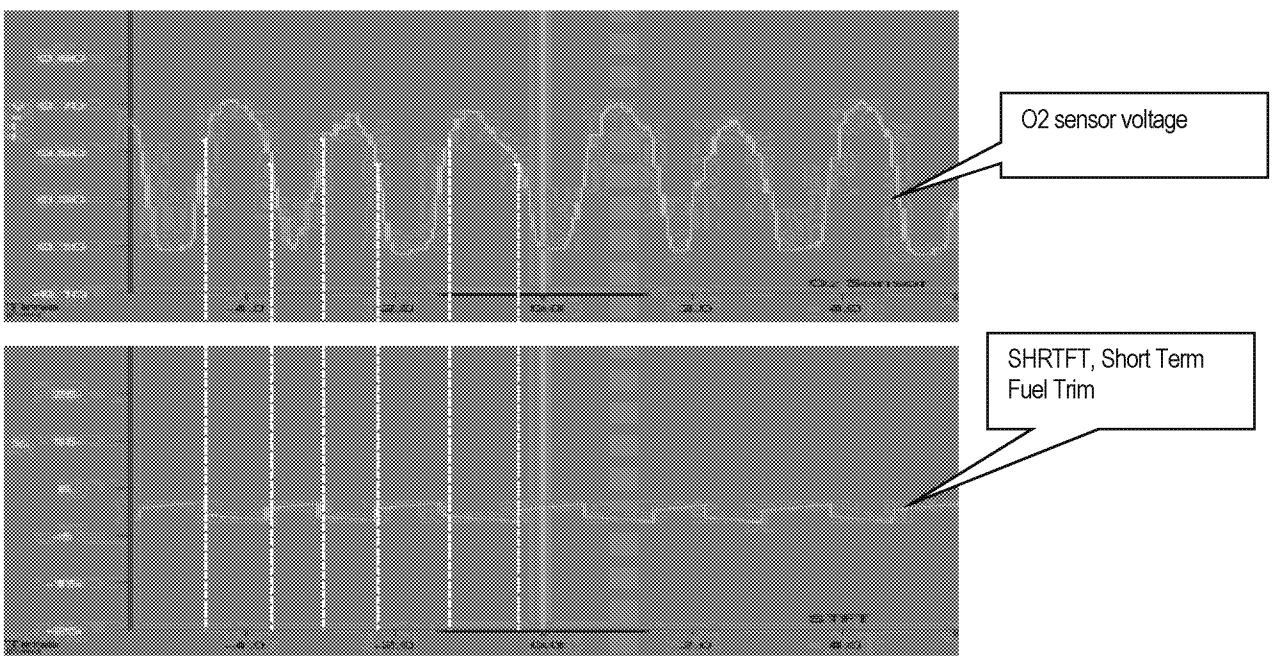

ED_002078G_00001322-00334

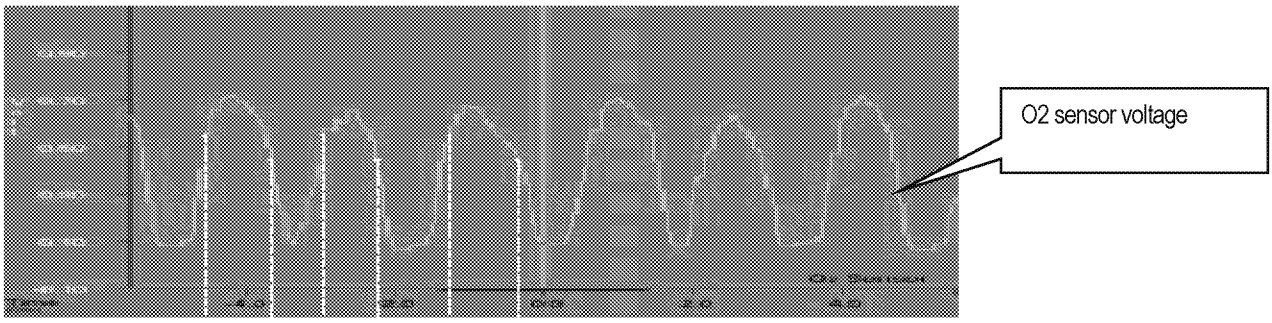
O2 sensor voltage

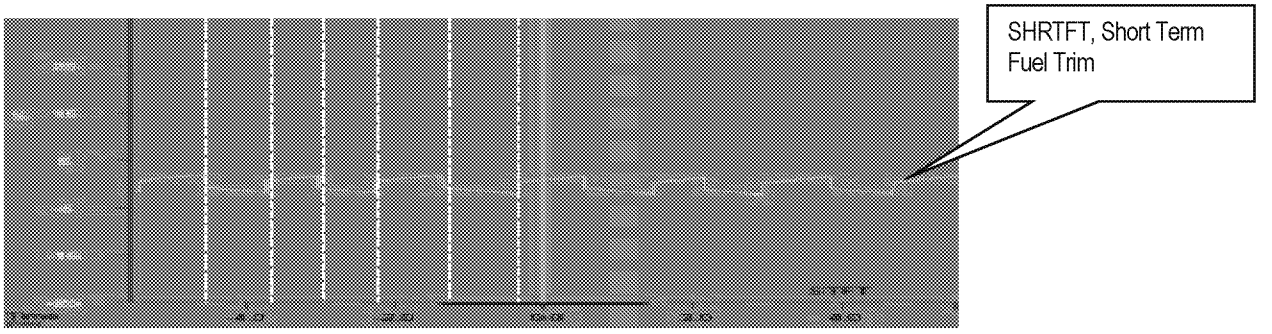
SHRTFT, Short Term Fuel Trim

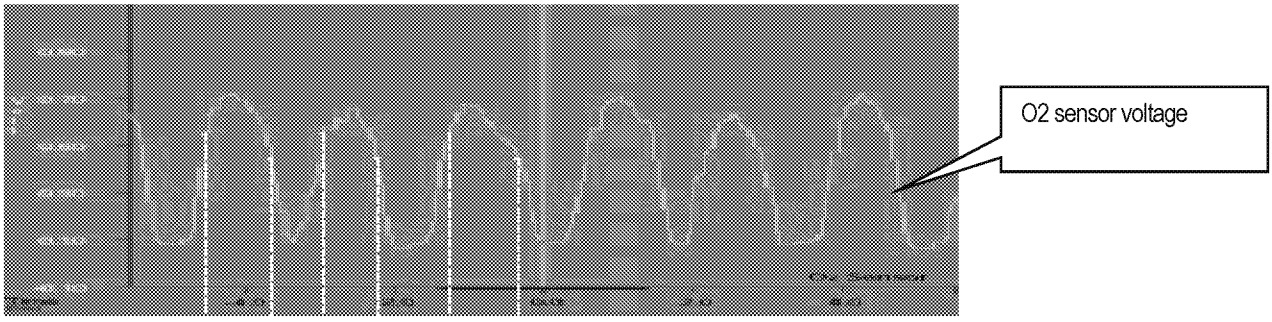
O2 sensor voltage

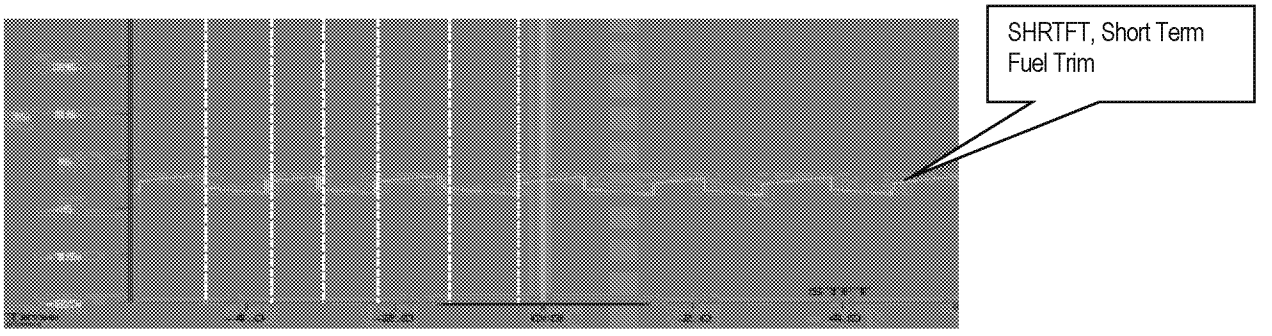
SHRTFT, Short Term Fuel Trim

As fuel, air, or engine components age or otherwise change over the life of the vehicle, the adaptive fuel strategy learns deviations from stoichiometry while running in closed loop fuel. Corrections are only learned during closed loop operation, and are stored in the PCM as long term fuel trim values (LONGFT). They may be stored into an 8x10 rpm/load table or they may be stored as a function of air mass. LONGFT values are only learned when SHRTFT values cause the oxygen sensor to switch. If the average SHRTFT value remains above or below stoichiometry, the PCM "learns" a new LONGFT value, which allows the SHRTFT value to return to an average value near 1.0. LONGFT values are stored in Keep Alive Memory as a function of air mass. The LONGFT value displayed on the scan tool is the value being used for the current operating condition.

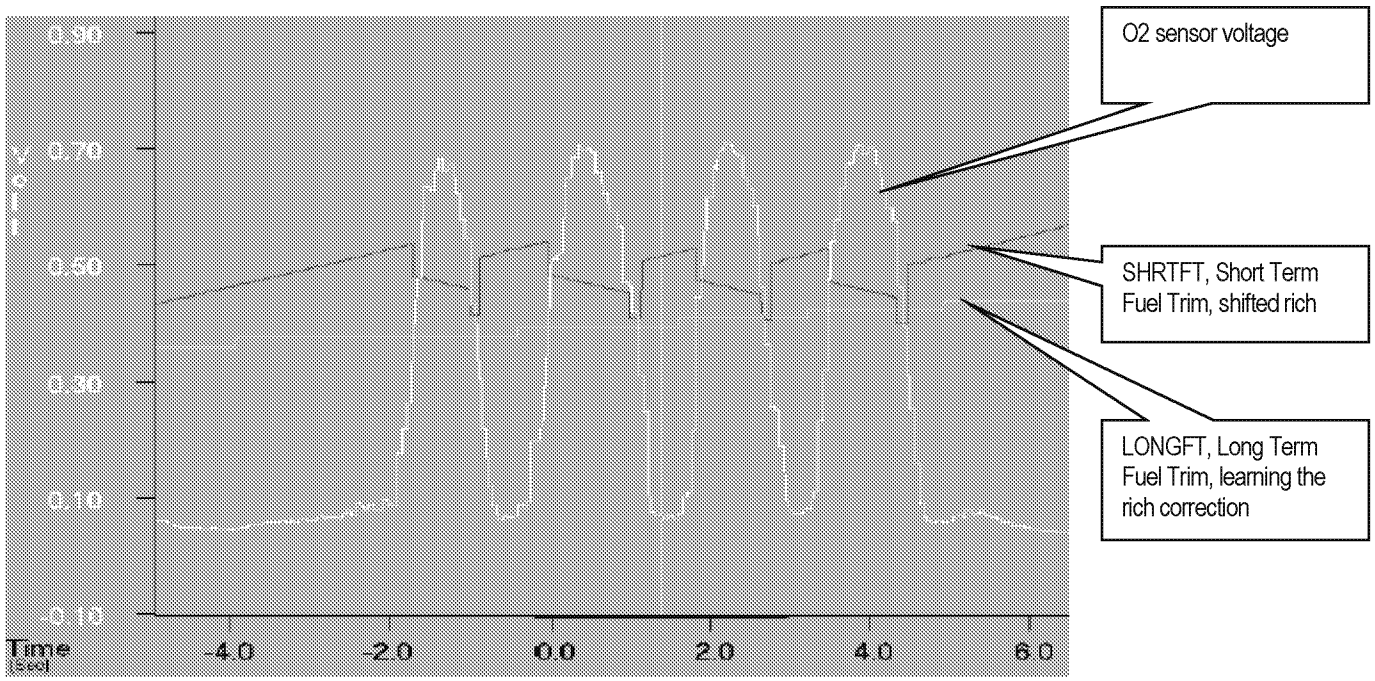

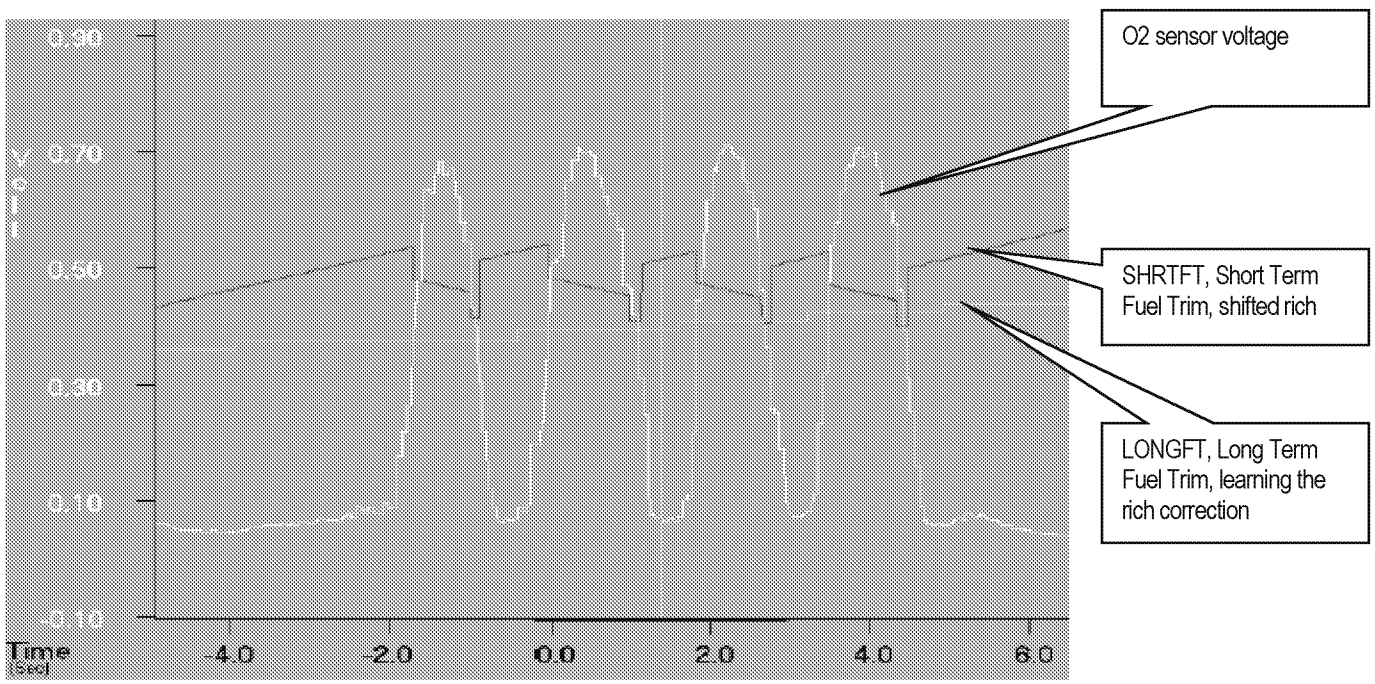

O2 sensor voltage

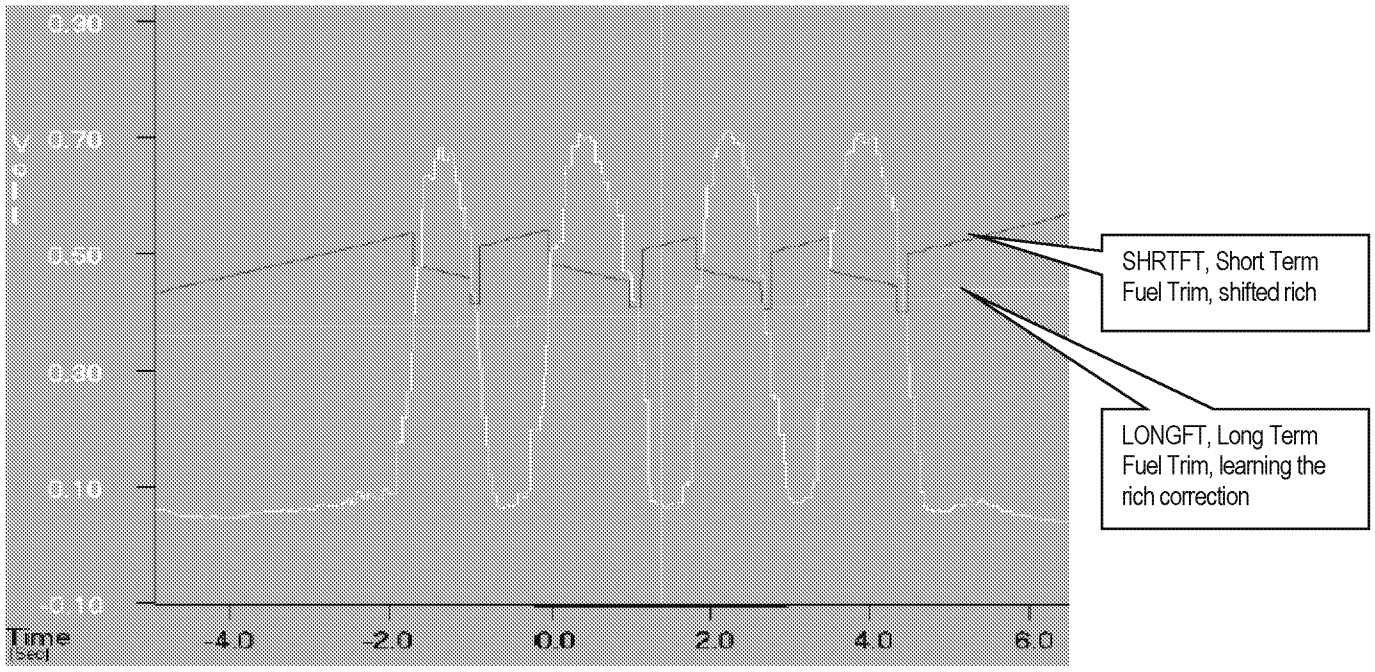

As components continue to change beyond normal limits or if a malfunction occurs, the long-term fuel trim values will reach a calibratable rich or lean limit where the adaptive fuel strategy is no longer allowed to compensate for additional fuel system changes. Long term fuel trim corrections at their limits, in conjunction with a calibratable deviation in short term fuel trim, indicate a rich or lean fuel system malfunction.

Note that in the PCM, both long and short-term fuel trim are multipliers in the fuel pulse width equation. Scan tools normally display fuel trim as percent adders. If there were no correction required, a scan tool would display 0% even though the PCM was actually using a multiplier of 1.0 in the fuel pulse width equation.

ED_002078G_00001322-00337

Fuel System Monitor

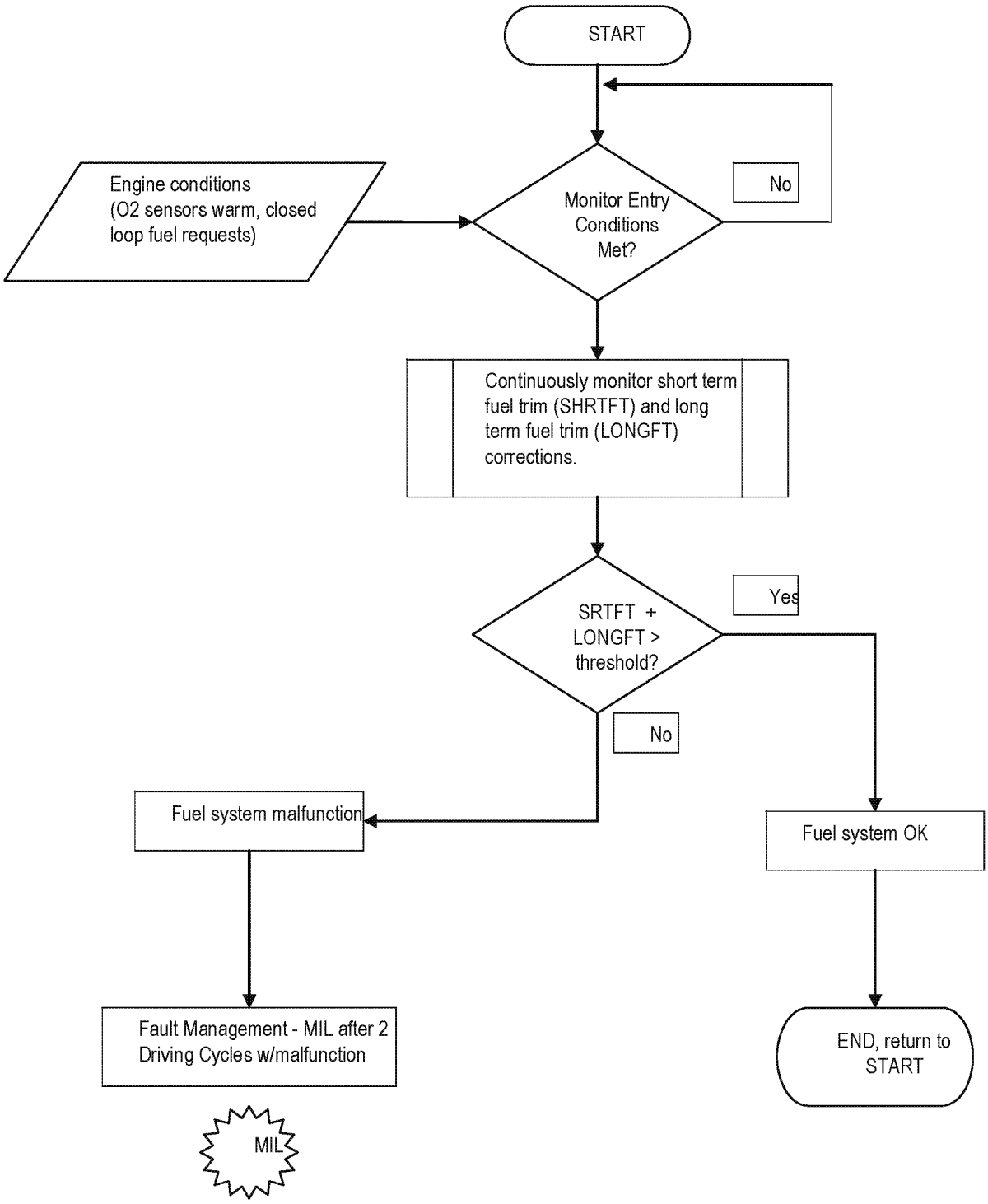

ED_002078G_00001322-00338

Fuel Monitor Operation:	
DTCs	P0171 Bank 1 Lean P0172 Bank 1 Rich
Monitor execution	continuous while in closed loop fuel
Monitor Sequence	none
Sensors OK	Fuel Rail Pressure (if available), IAT, CHT/ECT, MAF, TP
Monitoring Duration	2 seconds to register malfunction

Typical fuel monitor entry conditions:		
Entry condition	Minimum	Maximum
Engine Coolant Temp	155 °F	230 °F
Intake Air Temp	-40 °F	150 °F
Engine Load	30%	
Purge Duty Cycle	0%	0%
Fuel Level	15%	

Typical fuel monitor malfunction thresholds:
Long Term Fuel Trim correction cell currently being utilized in conjunction with Short Term Fuel Trim: Lean malfunction: LONGFT > 28%, SHRTFT > 2% Rich malfunction: LONGFT < 24%, SHRTFT < -2%

ED_002078G_00001322-00339

FAOSC (Rear Fuel Trim) Monitor

As the front UEGO sensor ages and gets exposed to contaminants, it can develop a rich or lean bias in its transfer function. The rear bias control (also called FAOSC – Fore/Aft Oxygen Sensor Control) system is designed to compensate for any of these bias shifts (offsets) using the downstream HO2S sensor. The "FAOS" monitor looks for any bias shifts at the stoichiometric point of the front UEGO sensor lambda curve. If the UEGO has developed a bias beyond the point for which it can be compensated for, lean (P2096, P2098) or rich (P2097, P2099) fault codes will be set.

UEGO "FAOS Monitor" Operation:	
DTCs	P2096 – Post catalyst fuel trim system too lean (Bank 1) P2097 – Post catalyst fuel trim system too rich (Bank 1)
Monitor execution	Continuous while in closed loop fuel
Monitor Sequence	> 30 seconds time in lack of movement test, > 30 seconds time in lack of switch test
Sensors OK	ECT, IAT, MAF, MAP, VSS, TP, ETC, FRP, FVR, DPFE EGR, VCT, VMV/EVMV, CVS, CPV, EVAPSV, FTP, CKP, CMP, ignition coils, injectors, no misfire DTCs, no system failures affecting fuel, no EVAP gross leak failure, UEGO heaters OK, rear HO2S heaters OK, no "lack of switching" malfunction, no "lack of movement" malfunction, no UEGO circuit malfunction, no rear stream 2 HO2S circuit malfunction, no rear stream 2 HO2S functional DTCs, no rear stream 2 HO2S response rate malfunction.
Monitoring Duration	5 seconds to register a malfunction

ED_002078G_00001322-00340

Typical UEGO "FAOS Monitor" entry conditions:		
Entry condition	Minimum	Maximum
Closed loop stoich fuel control		
Time since engine start	2 seconds	
Engine Coolant Temp	150 °F	235 °F
Time since entering closed loop fuel	95 seconds	
Fuel Level	15%	
Short Term Fuel Trim Range	-13%	18%
Short Term Fuel Trim Absolute Change		17%
Air mass range	1.5 lbm/min	8 lbm/min
Learning conditions stability time (based on air mass)	15 seconds	
Injector fuel pulsewidth (not at minimum clip)	850 usec	
Inferred HO2S 2 Heated Tip Temperature	800 °F	
No excessive movement between currently utilized long term fuel trim cells (1 = complete change from one cell to adjacent cell)		
UEGO sensor within +/- 2 % from the fuel control target		
UEGO ASIC not in recalibration mode		
Stream1 UEGO response test not running		
Intrusive UEGO catalyst monitor not running		
Not performing intrusive UEGO Lack-of-Movement fuel control defib		
Battery Voltage	11.0 Volts	18.0 Volts

Typical UEGO "FAOS Monitor" malfunction thresholds:
>= 5 seconds since reaching the FAOSC lean or rich limits while system bias maturity is met.

ED_002078G_00001322-00341

Air Fuel Ratio Imbalance Monitor

The Air Fuel Imbalance Monitor is designed to monitor the cylinder-to-cylinder air fuel imbalance per engine bank. When an Air Fuel (A/F) imbalance is present, the front UEGO signal becomes noisier. The monitor uses the high frequency component from the UEGO signal as an indicator of A/F imbalance. "Hash" is the difference between two consecutive front UEGO voltage samples. The UEGO signal is monitored continuously and a differential or "hash" value is continuously calculated. When the hash is below a threshold, it is indicative of normal operation. If the hash exceeds the threshold, an A/F imbalance is assumed which increments a hash error counter. The counter accumulates hash during series of calibratable rpm windows. Typically, a single window consists of 50 engine revolutions. A total rpm window counter calculates number of completed rpm windows. Monitor completion typically requires 30 rpm windows. When the monitor completes, an A/Fuel imbalance index is calculated. The monitor index is defined as the ratio of the failed rpm windows over the total rpm windows required to complete monitor. If the monitor imbalance ratio index exceeds the threshold value, an A/F imbalance DTC is set.

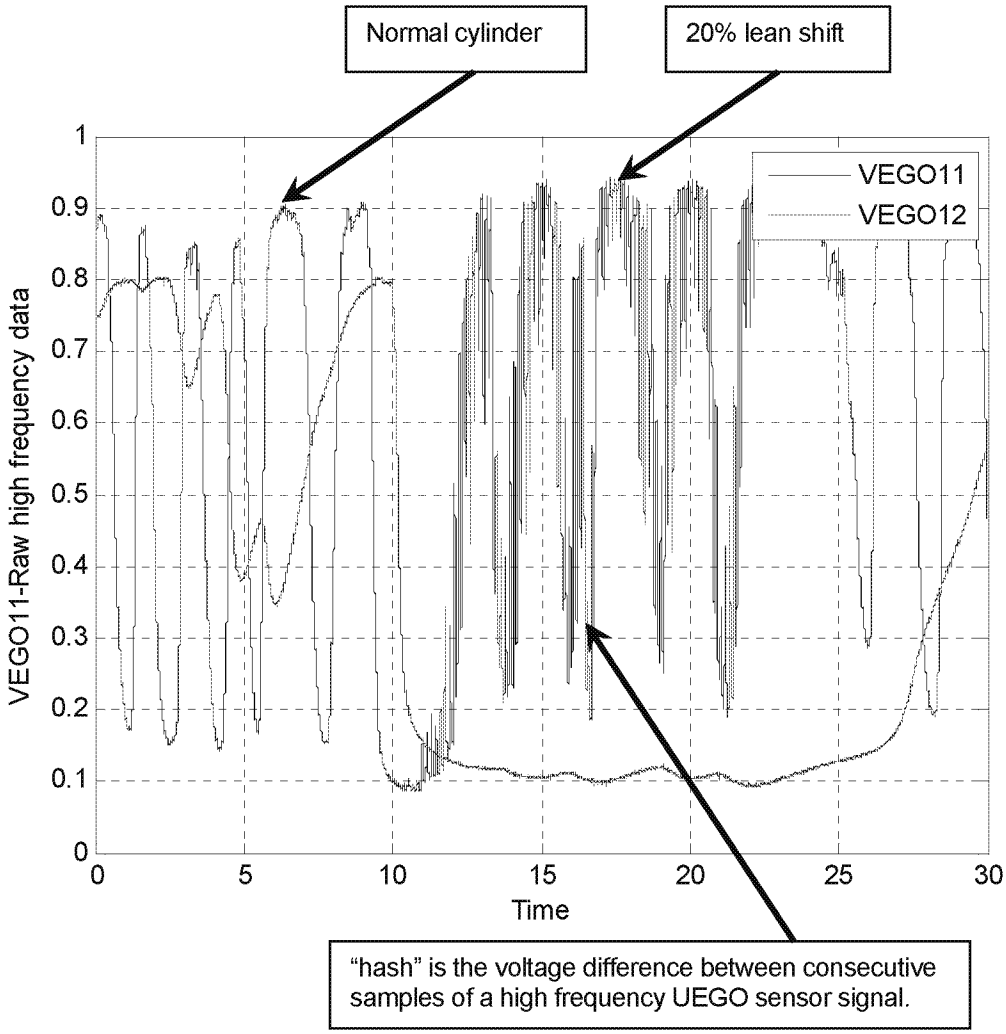

ED_002078G_00001322-00342

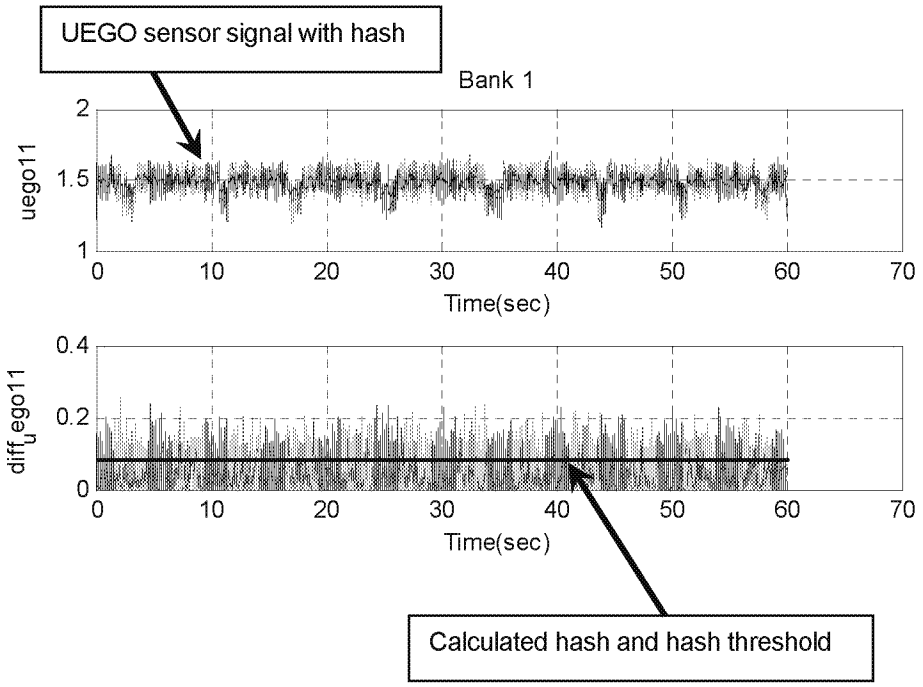
UEGO sensor signal with hash
Bank 1
uego11
Time(sec)
diff_uego11
Time(sec)
Calculated hash and hash threshold

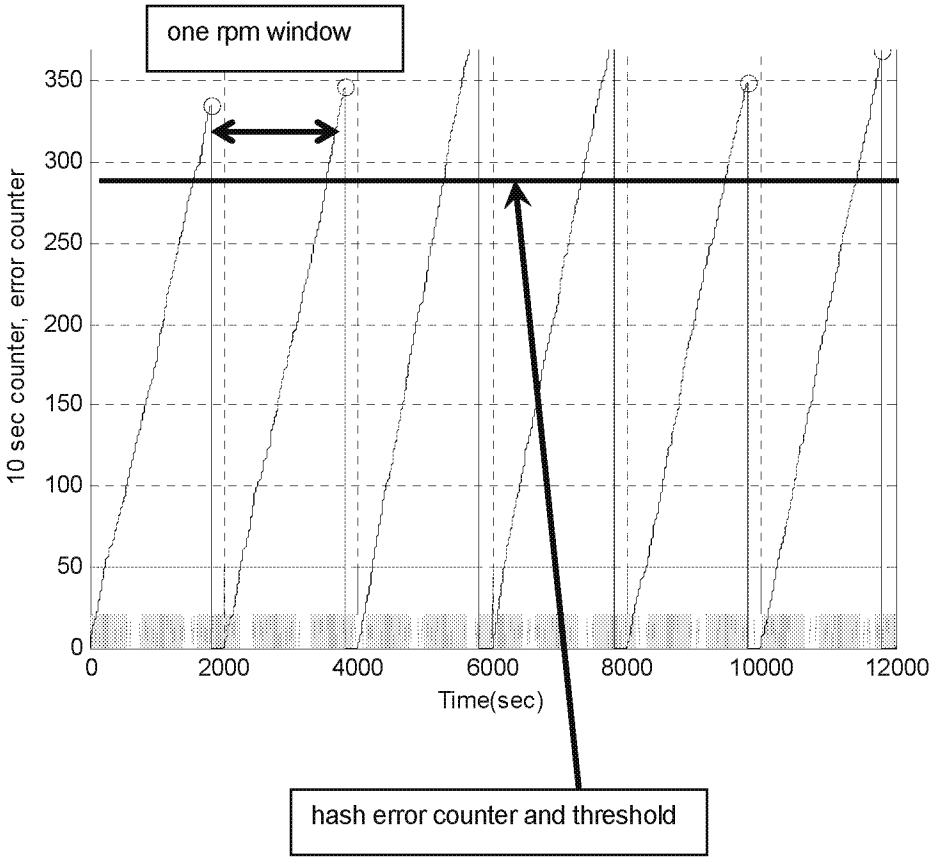
one rpm window
10 sec counter, error counter
Time(sec)
hash error counter and threshold

Air Fuel Ratio Imbalance Operation	
DTCs	P219A – Bank 1 Air-Fuel Ratio Imbalance
Monitor execution	Once per driving cycle during closed loop
Monitor Sequence	Monitor runs after fuel monitor has adapted
Sensors OK	ECT, IAT, MAF, VSS, TP, ETC, FRP, DPFE EGR, VCT, VMV/EVMV, CVS, FTP, CKP, CMP, ignition coils, injectors, no misfire DTCs, no system failures affecting fuel, no EVAP gross leak failure, UEGO heaters OK, rear HO2S heaters OK, no "lack of switching" malfunction, no "lack of movement" malfunction, no UEGO circuit malfunction, no rear stream 2 HO2S circuit malfunction, no rear stream 2 HO2S functional DTCs, no rear stream 2 HO2S response rate malfunction.
Monitoring Duration	Time to complete monitor ranges from 300 to 700 seconds

Air Fuel Ratio Imbalance entry conditions:		
Entry condition	Minimum	Maximum
Closed Loop Fuel Control		
Engine Air Mass	1.5 lb/min	10 lb/min
Engine RPM	1250 rpm	2750 rpm
Engine Load	5%	75%
Engine Coolant Temp	150 °F	235 °F
Intake Air Temp	20 °F	150 °F
Throttle Position Rate of Change		0.122 v/100 msec
Fuel percentage from purge		40%
Fuel Level	15%	
Fuel monitor has adapted		
No purge on/off transition		
Fuel type leaning is complete (FFV only)		

Air Fuel Ratio Imbalance malfunction thresholds:
Imbalance Ratio Bank 1 > .65

J1979 AFIMN MONITOR MODE $06 DATA			
Monitor ID	Test ID	Description	
$81	$80	Bank 1 imbalance-ratio and max. limit (P219A/P219B)	unitless

ED_002078G_00001322-00344

Front UEGO Signal

The UEGO sensor infers an air fuel ratio relative to the stoichiometric (chemically balanced) air fuel ratio by balancing the amount of oxygen pumped in or out of a measurement chamber. As the exhaust gasses get richer or leaner, the amount of oxygen that must be pumped in or out to maintain a stoichiometric air fuel ratio in the measurement chamber varies in proportion to the air fuel ratio. By measuring the current required to pump the oxygen in or out, the air fuel ratio (lambda) can be estimated. Note that the measured air fuel ratio is actually the output from the UEGO ASIC pumping current controller and not a signal that comes directly from the sensor.

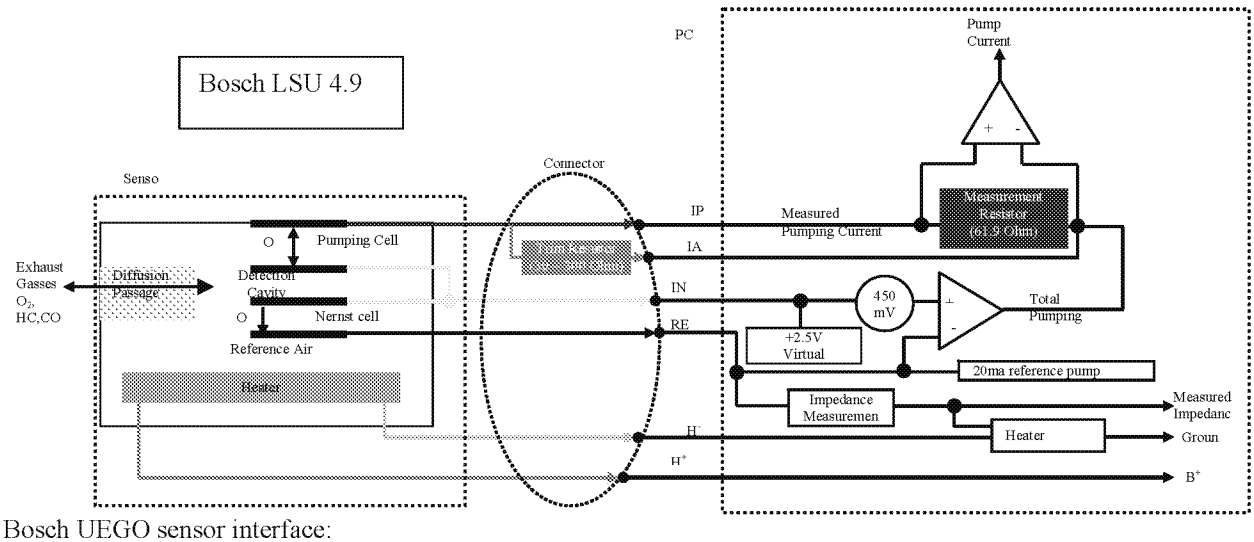

Bosch UEGO sensor interface:

IP – primary pumping current that flows through the sensing resistor
IA – current flow through trim resistor in parallel with sense resistor.
VM – Virtual ground, approximately 2.5 volts above PCM ground.
RE – Nernst cell voltage, 450mv from VM. Also carries current for pumped reference.
H+ – Heater voltage – to battery.
H- – Heater ground side – Duty cycle on/off to control sensor temperature.

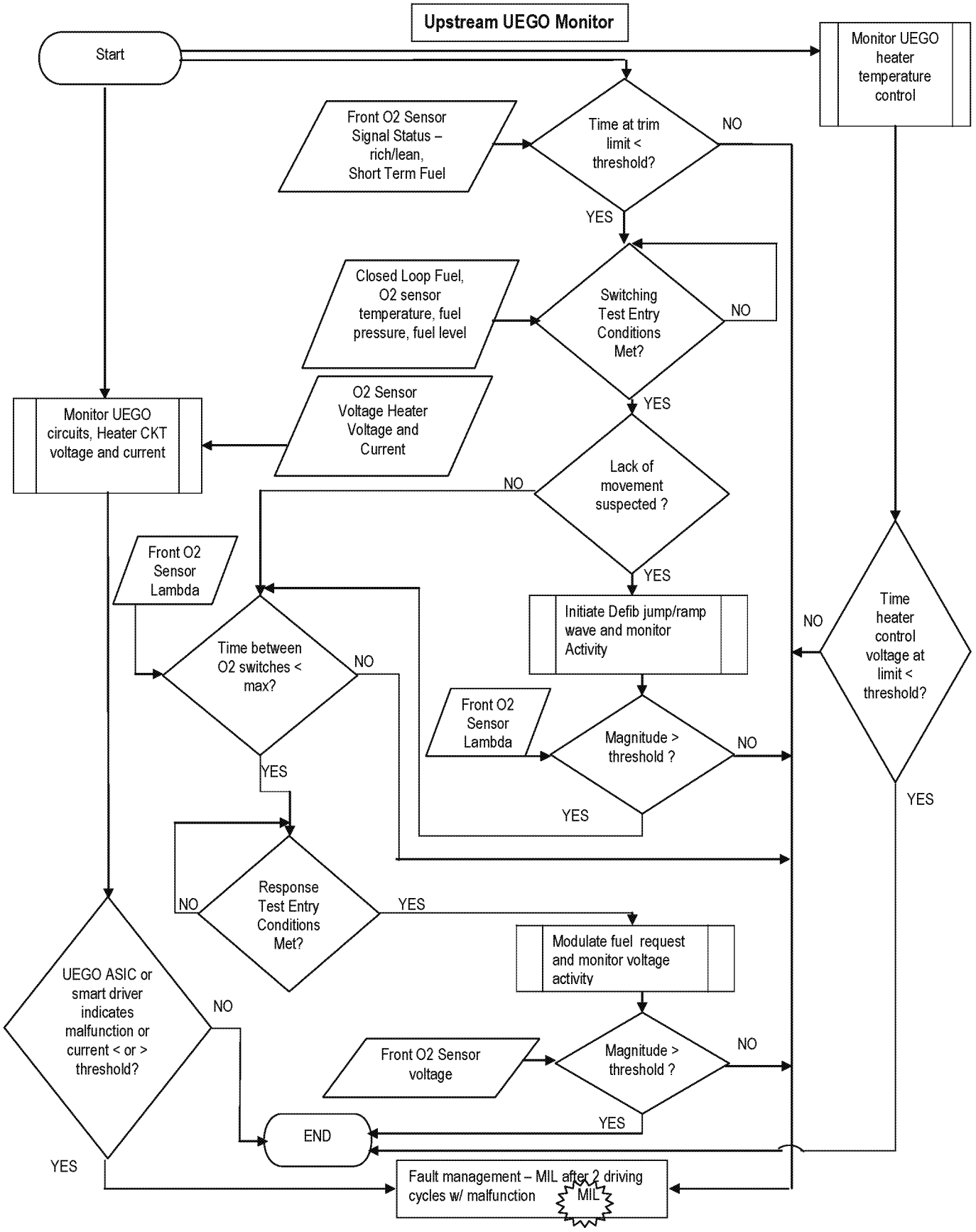
Upstream UEGO Monitor
Start
Monitor UEGO heater temperature control
Front O2 Sensor Signal Status – rich/lean, Short Term Fuel
Time at trim limit < threshold?
NO
YES
Closed Loop Fuel, O2 sensor temperature, fuel pressure, fuel level
Switching Test Entry Conditions Met?
NO
YES
O2 Sensor Voltage Heater Voltage and Current
Monitor UEGO circuits, Heater CKT voltage and current
Lack of movement suspected ?
NO
YES
Front O2 Sensor Lambda
Initiate Defib jump/ramp wave and monitor Activity
Time heater control voltage at limit < threshold?
NO
YES
Time between O2 switches < max?
NO
YES
Front O2 Sensor Lambda
Magnitude > threshold ?
NO
YES
Response Test Entry Conditions Met?
NO
YES
Modulate fuel request and monitor voltage activity
UEGO ASIC or smart driver indicates malfunction or current < or > threshold?
NO
YES
Front O2 Sensor voltage
Magnitude > threshold ?
NO
YES
END
Fault management – MIL after 2 driving cycles w/ malfunction
MIL

The primary component of a UEGO sensor is the diffusion passage that controls the flow of exhaust gasses into a detection cavity, a Nernst cell (essentially an EGO sensor inside the UEGO sensor) that measures the air fuel ratio in the detection cavity. A control circuitry in the ASIC chip (mounted in the PCM) controls the pumping current (IP) to keep the detection cavity near stoichiometry by holding the Nernst cell at 450 mV. This Nernst cell voltage (RE, VS) is 450mV from the virtual ground (VM, COM), which is approximately 2.5V (Bosch UEGO) or 3.6V (NTK UEGO) above the PCM ground. For the Nernst cell to generate a voltage when the detection cavity is rich, it needs an oxygen differential across the cell. In older UEGO (and HEGO) sensor designs, this was provided by a reference chamber that was connected to outside air through the wire harness that was subject to contamination and "Characteristic Shift Down (CSD)". The new UEGO sensor uses a pumped reference chamber, which is sealed from the outside to eliminate the potential for contamination. The necessary oxygen is supplied by supplying a 20 mA pumping current across the Nernst cell to pump small amounts of oxygen from the detection cavity to the reference chamber. The pumping cell pumps oxygen ions in and out of the detection cavity from and to the exhaust gasses in response to the changes in the Nernst cell voltage. The pumping current flows through the sense resistor and the voltage drop across the sense resistor is measured and amplified. Offset volts are sent out of the ASIC to one of the PCM's A/D inputs. The PCM measures the voltage supplied by the ASIC, determines the pumping current, and converts the pumping current to measured lambda. In general, the circuitry that measures the pumping current is used to estimate the air fuel ratio in the exhaust system.

The UEGO sensor also has a trim (IA) or label resistor (RL). The biggest source of part to part variability in the measured air fuel ratio is difference in the diffusion passage. This source of variation is simply the piece-to-piece differences from the manufacturing process. To compensate for this source of error, each sensor is tested at the factory and a trim or label resistor is installed in the connector. The value of this resistor is chosen to correlate with the measured difference between a particular sensor and a nominal sensor

For Bosch UEGO, the trim resistor is connected in parallel to the pumping current sense resistor and the pumping current flows through both. The trim resistor adjusts the measured pumping current back to the expected nominal value at any given air fuel ratio (correcting for the sensor to sensor variations in the diffusion passage). Small trim resistors are required for sensors that require more pumping current at any particular lambda. Conversely, for sensors with lower diffusion rates than average, less pumping current is required, so a higher than average impedance trim resistor is installed. When IA circuit is open, all of the pumping current flows through the measuring resistor which increases the measured voltage. Since the pumping current is amplified, the UEGO pumping current to lambda transfer function will reflect the error. The slope of the UEGO sensor transfer function changes, which results in the wrong output of the UEGO signal (the slope of the pumping current to lambda relationship can increase or decrease). For "stoichiometric" air/fuel control applications, an open IA circuit is not monitored since the lambda error is minimal in "stoichiometric" mode. A worst case (40 ohm resistor) open IA was tested on a 2008MY 3.5L Taurus PZEV and showed no impact on tailpipe emissions.

For "Non-Stoichiometric Closed Loop (NSCL)" air/fuel control applications, a continuous open IA diagnostics (Air Rationality Test) is required since the lambda error is more significant in this mode. The air rationality test will always monitor the UEGO sensor voltage reading during Decel Fuel Shut Off (DFSO) event. The monitor compares the UEGO sensor voltage reading in air against the expected value for pure air. If the UEGO sensor voltage during DFSO exceeds the maximum UEGO voltage in air threshold, then the fault timer increments. If the fault timer exceeds the fault time threshold, then open IA DTC P2626 and/or P2629 will set. Since transient sources of fuel in the exhaust after injector cut can contribute to the UEGO sensor voltage to read lower (rich), the air rationality monitor will not call a pass until the transient sources of fuel have been exhausted and pure air entry conditions during DFSO are met (i.e. all injectors must be off, purge must be off, no fuel must be leaking around the PCV valve, and a few transport delays must have passed to allow the last fuel transients to be exhausted leaving nothing for the sensor to see, but air).

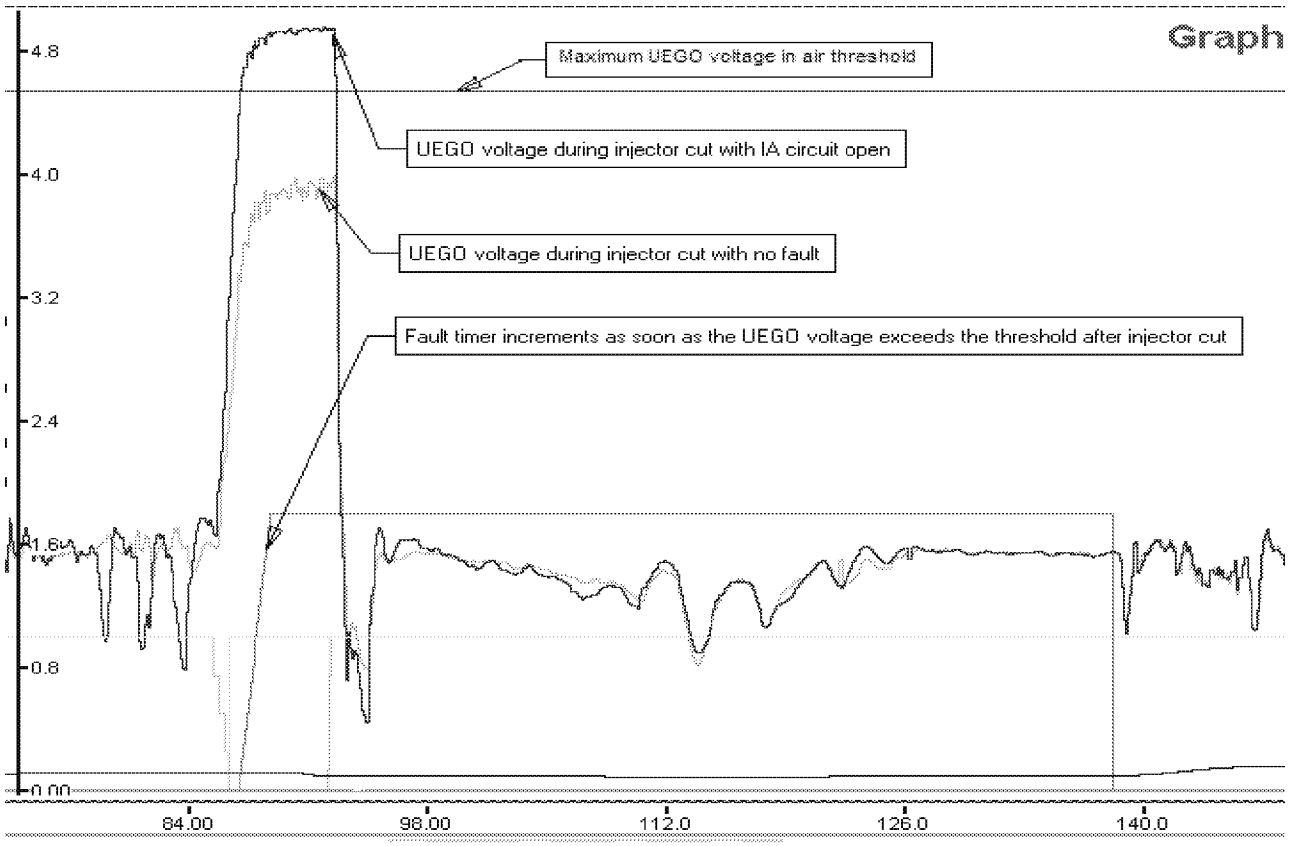

The time spent at the limits of the short term fuel trim and the time when the measured lambda is nearly 1.0 are monitored after vehicle startup when closed loop fuel has been requested, during closed loop fuel conditions, or when open loop fuel has been requested due to UEGO sensor fault. Excessive time with short term fuel trim at its limits (up to +/- 40%), or no rich / lean activity seen since startup indicates a "lack of switch" malfunction. Also, excessive time without measured lambda deviating from 1.0, in spite of attempts to force activity (defib) in the measured lambda, indicates a "lack of movement" malfunction. Since “lack of switching” malfunctions can be caused by UEGO sensor malfunctions or by shifts in the fuel system, DTCs are stored that provide additional information for the “lack of switching” malfunction. Different DTCs indicate whether the sensor always indicates lean (P2195, P2197), or always indicates rich (P2196, P2198). "Lack of movement" malfunction, (Bosch UEGO application only), typically indicating a disconnected wire (pumping current, IP), results in P0134, P0154 DTCs.

UEGO equipped vehicles will also monitor the circuitry between the PCM and the UEGO sensor via the wire diagnostics capability included on the UEGO ASIC chip. The wire diagnostics will detect wires (IP, IA, VM/COM, RE/VS) shorted to battery, or ground, and in most cases will detect open circuits (IP, VM/COM, RE/VS). The diagnostic bits are transmitted to the PCM via SPI (serial peripheral interface). The SPI communication is validated continuously, and if a SPI communication failure is detected, fault code(s) P064D and/or P064E will be set. The ASIC is also capable of detecting internal circuitry failure; in which case, an ASIC failure DTC (P1646, P1647) along with the SPI communication failure DTC (P064D, P064E) will be set.

ED_002078G_00001322-00348

UEGO "Lack of Switching" Operation:	
DTCs	P2195 - Lack of switching, sensor indicates lean, Bank 1 P2196 - Lack of switching, sensor indicates rich, Bank 1
Monitor execution	continuous, from startup and while in closed loop fuel or open loop fuel due to UEGO sensor fault
Monitor Sequence	None
Sensors OK	ECT, IAT, MAF, VSS, TP, ETC, VCT, VMV/EVMV, CVS, FTP, CKP, CMP, ignition coils, injectors, no misfire DTCs, no system failures affecting fuel, no EVAP gross leak failure, UEGO heaters OK, no "lack of movement" malfunction, no UEGO circuit malfunction
Monitoring Duration	30 seconds to register a malfunction

Typical UEGO "Lack of Switching" entry conditions:		
Entry condition	Minimum	Maximum
Closed Loop or Open Loop Requested due to UEGO sensor fault		
No fuel flow entering thru PCV during cold start when flashing off fuel in oil (for O2 Sensor Stuck Rich DTCs only)		
Inferred Ambient Temperature	-40 ^{o}F	
Time within entry conditions	10 seconds	
Fuel Tank Pressure		10 in H_2O HEV, 50 in H_2O PHEV
Fuel Level	15%	
Battery Voltage	11.0 Volts	18.0 Volts

Typical UEGO "Lack of Switching" malfunction thresholds:
Stage 1: > 60 seconds since reaching the short term fuel trim limits while closed loop fuel or Stage 2: < 1 second rich or < 1 seconds lean since startup for > 60 seconds in test conditions while open loop fuel is requested due to UEGO sensor fault.

ED_002078G_00001322-00349

UEGO "Lack of Movement – Open Pump Current Circuit" Operation (Bosch UEGO only):	
DTCs	P2237 – O2 Sensor Positive Current Control Circuit/Open (Bank 1, Sensor 1) (replaces P0134)
Monitor execution	continuous, from startup and while in closed loop fuel or open loop fuel due to UEGO sensor fault
Monitor Sequence	None
Sensors OK	ignition coils, injectors, no misfire DTCs, no system failures affecting fuel, UEGO heaters OK, no "lack of switching" malfunction, no "lack of movement-open reference ground circuit" malfunction, no UEGO circuit malfunction
Monitoring Duration	10 - 20 seconds to register a malfunction

Typical UEGO "Lack of Movement – Open Pump Current Circuit " entry conditions (Bosch UEGO only):		
Entry condition	Minimum	Maximum
Closed Loop or Open Loop Requested due to UEGO sensor fault		
Constant lambda near stoich (~1)	0.99	1.01
Time since no lambda activity seen since start up	30 sec	
Time since no lambda activity during intrusive Stream 1 response monitor	3 sec	
Inferred Ambient Temperature	- 40 °F	
Injector fuel pulsewidth	650 usec	
UEGO ASIC not in recalibration mode		
No air passing through during valve overlap (scavenging).		
Battery Voltage	11.0 Volts	18.0 Volts

Typical UEGO "Lack of Movement – Open Pump Current Circuit" malfunction thresholds (Bosch UEGO only):
Stage 1: > 20 seconds in test conditions without lambda movement during fuel control and reference current "defib" while in closed loop fuel and < = 0.05 change in lambda movement. Stage 2: < 0.2 seconds without lambda movement since startup for > 30 seconds in test conditions during reference current "defib" while open loop fuel is requested due to UEGO sensor fault and < = 0.05 change in lambda movement.

ED_002078G_00001322-00350

UEGO "Lack of Movement – Open Reference Ground Circuit " Operation (Bosch UEGO only):	
DTCs	P2251 – O2 Sensor Negative Current Control Circuit/Open (Bank 1, Sensor 1) (replaces P0130)
Monitor execution	continuous, from startup and while in closed loop fuel or open loop fuel due to UEGO sensor fault
Monitor Sequence	None
Sensors OK	ignition coils, injectors, no misfire DTCs, no system failures affecting fuel, UEGO heaters OK, no "lack of switching" malfunction, no "lack of movement-open pump current circuit" malfunction, no UEGO circuit malfunction
Monitoring Duration	10 - 20 seconds to register a malfunction

Typical UEGO "Lack of Movement – Open Reference Ground Circuit " entry conditions (Bosch UEGO only):		
Entry condition	Minimum	Maximum
Closed Loop or Open Loop Requested due to UEGO sensor fault		
Constant lambda near stoich (~1)	0.99	1.01
Time since no lambda activity seen since start up	30 sec	
Time since no lambda activity during intrusive Stream 1 response monitor	3 sec	
Injector fuel pulsewidth	650 usec	
UEGO ASIC not in recalibration mode		
No air passing through during valve overlap (scavenging).		
Battery Voltage	11.0 Volts	18.0 Volts

Typical UEGO "Lack of Movement – Open Reference Ground Circuit" malfunction thresholds (Bosch UEGO only):
Stage 1: > 20 seconds in test conditions without lambda movement during fuel control and reference current "defib" while in closed loop fuel and > 0.05 change in lambda movement. Stage 2: > 20 seconds in test conditions without lambda movement during reference current "defib" while open loop fuel is requested due to UEGO sensor fault and > 0.05 change in lambda movement.

ED_002078G_00001322-00351

UEGO equipped vehicles monitor the circuitry between the PCM and the UEGO sensor via the wire diagnostics capability included on the UEGO ASIC chip. The wire diagnostics will detect wires (IP, IA, VM/COM, RE/VS) shorted to battery, or ground, and in most cases will detect open circuits (IP, VM/COM, RE/VS). The diagnostic bits are transmitted to the PCM via SPI (serial peripheral interface). The SPI communication is validated continuously, and if a SPI communication failure is detected, fault code(s) P064D and/or P064E will be set. The ASIC is also capable of detecting internal circuitry failure; in which case, an ASIC failure DTC (P1646, P1647) along with the SPI communication failure DTC (P064D, P064E) will be set.

UEGO "Wire Diagnostic via ASIC" Operation:	
DTCs	P0131 – O2 circuit low voltage (Bank 1, Sensor 1). (Note: Sets for short to ground on Bosch UEGO- IP, IA, RE, VM; NTK UEGO – IP, VS, COM. Replaces P0130 in Bosch UEGO applications.) P0132 – O2 circuit high voltage (Bank 1, Sensor 1). (Note: Sets for short to battery on Bosch UEGO- IP, IA, RE, VM; NTK UEGO – IP, VS, COM. Replaces P0130 in Bosch UEGO applications.) P1646 – Linear O2 sensor control chip, Bank 1. P064D – Internal control module O2 sensor processor performance (Bank 1).
Monitor execution	continuous
Monitor Sequence	None
Sensors OK	UEGO heaters OK
Monitoring Duration	10 seconds to register a malfunction

Typical UEGO "Wire Diagnostic via ASIC" entry conditions:		
Entry condition	Minimum	Maximum
Fault reported by UEGO ASIC		
Battery Voltage	11.0 Volts	18.0 Volts

Typical UEGO "Wire Diagnostic via ASIC " malfunction thresholds:
UEGO ASIC indicated malfunction, DTC sets after 10 seconds when circuit failure is present.

ED_002078G_00001322-00352

Front UEGO Slow/Delayed Response Monitor (2010 MY and beyond)

The front UEGO monitor also detects malfunctions on the UEGO sensor such as reduced response or delayed response that would cause vehicle emissions to exceed 1.5x the standard (2.5x the standard for PZEV). The response rate is evaluated by entering a special 0.5 Hz square wave, fuel control routine. This routine drives the air/fuel ratio around stoichiomentry at a calibratable frequency and magnitude, producing predictable oxygen sensor signal amplitude.

A UEGO slow or delayed sensor will show an increased response time which is compared to a no-fault polygon. Combinations of the rich to lean and lean to rich response times that fall outside the polygon indicate a sensor malfunction (P0133 Bank 1).

UEGO "Response Rate" Operation:	
DTCs	P0133 (slow/delayed response Bank 1)
Monitor execution	once per driving cycle
Monitor Sequence	> 30 seconds time in lack of movement test, > 30 seconds time in lack of switch test
Sensors OK	ECT, IAT, MAF, VSS, TP, ETC, VCT, VMV/EVMV, CVS, FTP, CKP, CMP, ignition coils, injectors, no misfire DTCs, no system failures affecting fuel, no EVAP gross leak failure, UEGO heaters OK, no "lack of switching" malfunction, no "lack of movement" malfunction, no UEGO circuit malfunction, no UEGO FAOS monitor malfunction
Monitoring Duration	6 seconds

ED_002078G_00001322-00353

Typical UEGO "Response Rate" entry conditions:		
Entry condition	Minimum	Maximum
Flex Fuel Composition not changing		
Not in Phase 0 of Evap Monitor, Purge intrusive test not running		
No Purge System reset		
Not performing CSER spark retard		
Not performing intrusive UEGO Lack of Movement "defib"		
No IMRC transition in progress before entering the monitor and while in monitor		
Air mass stability criteria met before entering the monitor and while in monitor		
Engine Coolant Temp	130 °F	240 °F
Intake Air Temp		140 °F
Time since entering closed loop fuel	10 seconds	
Inferred Catalyst Midbed Temperature		1600 °F
Fuel Level	15%	
Short Term Fuel Trim Range	-9%	5%
Short Term Fuel Trim Absolute Change while in monitor		15%
Air Mass	0.5 lbs/min	
Engine Load	25%	75%
Maximum change in engine load while in monitor		25%
Vehicle Speed	30 mph	80 mph
Maximum change in vehicle speed while in monitor		9 mph
Engine RPM	1000 rpm	2500 rpm
Maximum change in engine rpm while in monitor		500 rpm
Commanded versus actual lambda range while in monitor	0.85	1.15
Cam angle		60
Cam angle movement stability criteria met while in monitor		2.0
Battery Voltage	11.0 Volts	18.0 Volts

ED_002078G_00001322-00354

Typical UEGO "Response Rate" malfunction thresholds:

Threshold depends on failure type (symmetric slow/delay vs. asymmetric slow/delay)

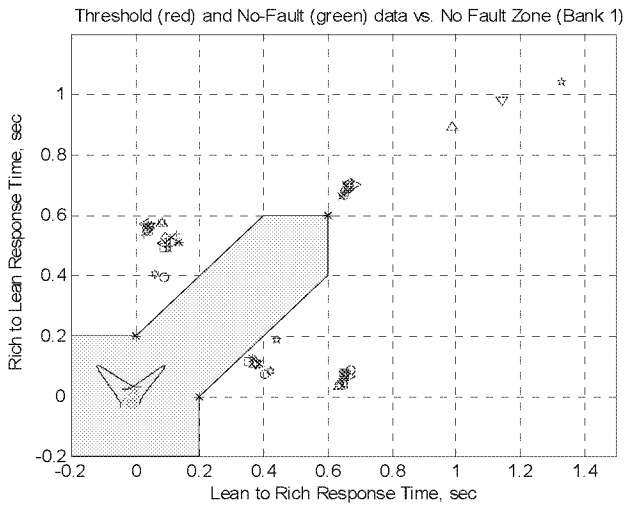

Example shown with lean-to-rich (0.2 sec), rich-to-lean (0.2 sec), and symmetric (0.6 sec) thresholds creating the yellow no-fault zone. The completeted monitor results in two measurements, a lean-to-rich response time and a rich-to-lean response time. These response time values are used as x-y pairs to make a single point and then compared to the no-fault zone. Anywhere in the yellow is a pass and outside the yellow is a failure.

J1979 Front UEGO Mode $06 Data

Monitor ID	Test ID	Description for CAN	
$01	$87	UEGO11 Rich to Lean Response Time	seconds
$01	$88	UEGO11 Lean to Rich Response Time	seconds

ED_002078G_00001322-00355

UEGO Heaters

The UEGO heater is controlled as a function of the measured impedance to keep the sensor at a near constant temperature (Bosch: 780 deg C, NTK: 800 deg C). The impedance of the Nernst cell decreases as the sensor temperature increases. This impedance is measured by periodically applying a small current across the Nernst cell and measuring the change in the voltage. The output voltage is then sent to an A/D input on the PCM. After a cold start, the UEGO heater ramps up to the maximum duty cycle to heat the sensor. After a few seconds, the measured impedance will start to decrease and when the target value is crossed, the heater goes into closed loop heater control to maintain the sensor at a near constant temperature.

The "UEGO Heater Temperature Control Monitor" tracks the time at the maximum duty cycle during the open loop sensor warm up phase. If the measured impedance does not come down to the target value to allow the system to transition from open loop heater control to closed loop heater control within a specified time, then a fault code is set. This monitor also sets a malfunction when the closed loop heater control reaches a maximum or minimum value for a period of time indicating that the controller is no longer able to maintain the target temperature, however, if the inferred exhaust temperature is high enough that the sensor will be above the target temperature even with no heat, then this monitor is disabled.

The UEGO heaters are also monitored for proper voltage and current. A UEGO heater voltage fault is determined by turning the heater on and off and looking for corresponding voltage change in the heater output driver circuit in the PCM.

A separate current-monitoring circuit monitors heater current once per driving cycle. This monitor normally runs in closed loop heater control after all the exhaust gas sensor functional tests are completed, however, it can also run intrusively. When the UEGO sensor indicates cold, but the heater is inferred to have been adequately warm, the current monitor is forced to run intrusively prior to the completion of the heater temperature control monitor. The heater current is actually sampled three times. If the current value for two of the three samples falls below or above a calibratable threshold, the heater is assumed to be degraded or malfunctioning. (Multiple samples are taken for protection against noise on the heater current circuit.)

UEGO Heater Monitor Operation:	
DTCs	P0030 Heater Temperature Control Failure, Bank 1 P0135 O2 Heater Circuit, Bank 1 P0053 O2 Heater Resistance, Bank 1
Monitor execution	once per driving cycle for heater current monitor, continuous for voltage monitoring and heater temperature control monitoring
Monitor Sequence	Heater current monitor: Stream 1 UEGO response test complete, Stream 2 and 3 HO2S functional tests complete, Stream 1 UEGO heater voltage check complete. Heater temperature control monitor: intrusive heater current monitor completed.
Sensors OK	Heater current monitor: no HO2S/UEGO heater circuit malfunction, Heater temperature control monitor: no UEGO circuit malfunction, no UEGO heater circuit malfunction, no UEGO heater current monitor DTCs.
Monitoring Duration	< 10 seconds for heater voltage check, < 5 seconds for heater current check, >= 30 seconds for the heater temperature control monitor to register a malfunction

ED_002078G_00001322-00356

Typical UEGO heater monitor entry conditions:		
Entry condition	Minimum	Maximum
Inferred UEGO unheated tip temperature (heater voltage check only)	75 °F	1562 °F
Inferred UEGO heated tip temperature (heater current check only)	1346 °F	1526 °F
UEGO heater-on time (heater current check only)	30 seconds	
Engine RPM (heater current check only)		5000 rpm
Inferred UEGO unheated tip temperature (heater control monitor only)	75 °F	1000 °F
Battery Voltage	11.0 Volts	18.0 Volts

Typical UEGO heater check malfunction thresholds:
Smart driver status indicated malfunction (heater voltage check)
Number monitor retries allowed for malfunction > = 30 (heater voltage check)
Heater current outside limits:
< 1.0 amps or > 3 amps (intrusive test) or < 0.55 amps or > 3 amps (Bosch UEGO)
Heater temperature control monitor: > = 30 seconds to register a malfunction while the heater control integrator is at its maximum or minimum limit

J1979 UEGO Heater Mode $06 Data			
Monitor ID	Test ID	Description for CAN	Units
$01	$81	HO2S11 Heater Current	Amps
$05	$81	HO2S21 Heater Current	Amps

ED_002078G_00001322-00357

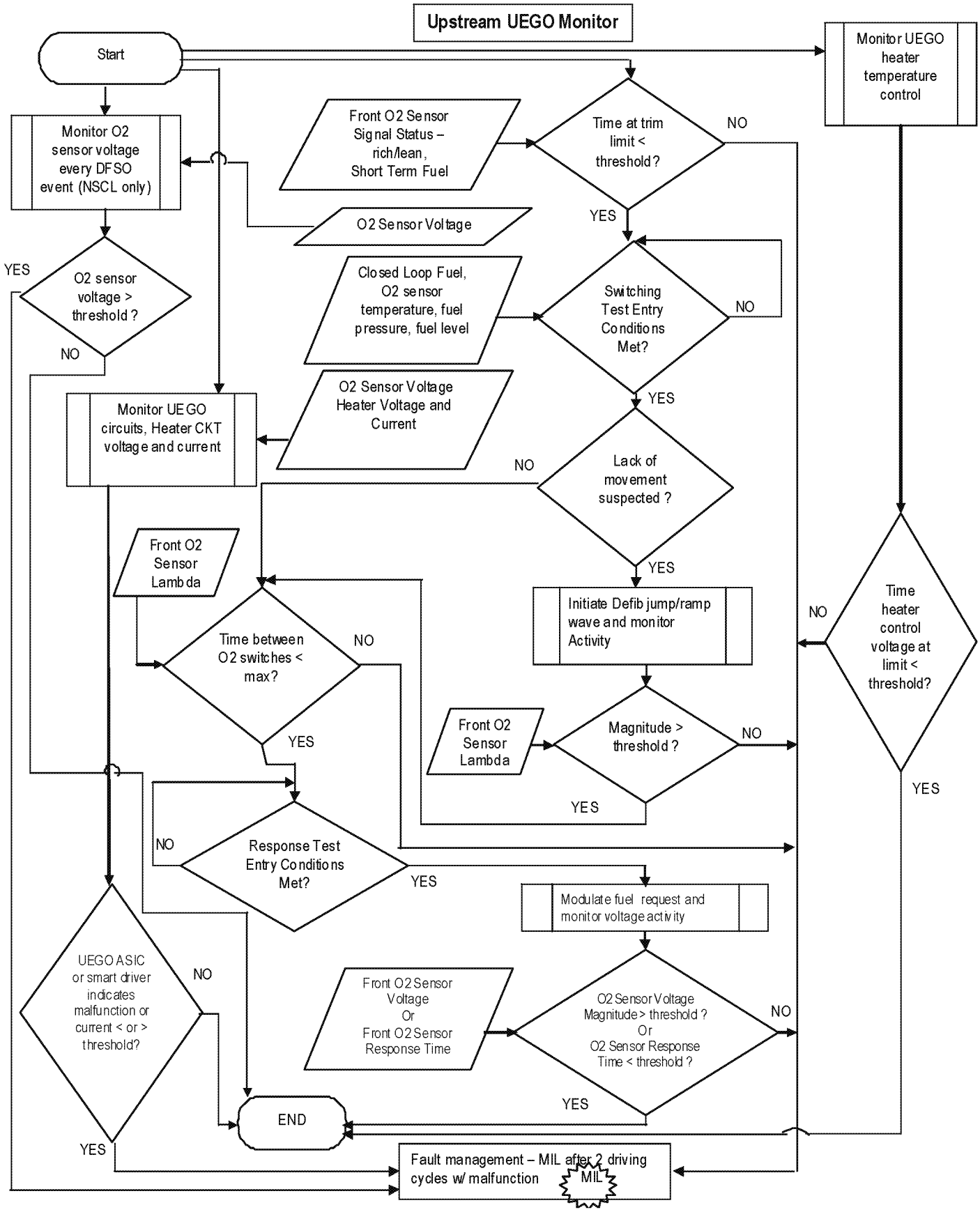
Upstream UEGO Monitor
Start
Monitor UEGO heater temperature control
Monitor O2 sensor voltage every DFSO event (NSCL only)
Front O2 Sensor Signal Status – rich/lean, Short Term Fuel
Time at trim limit < threshold?
NO
YES
O2 Sensor Voltage
YES
O2 sensor voltage > threshold ?
NO
Closed Loop Fuel, O2 sensor temperature, fuel pressure, fuel level
Switching Test Entry Conditions Met?
NO
YES
Monitor UEGO circuits, Heater CKT voltage and current
O2 Sensor Voltage Heater Voltage and Current
NO
Lack of movement suspected ?
YES
Front O2 Sensor Lambda
Initiate Defib jump/ramp wave and monitor Activity
NO
Time heater control voltage at limit < threshold?
Time between O2 switches < max?
NO
YES
Front O2 Sensor Lambda
Magnitude > threshold ?
NO
YES
YES
NO
Response Test Entry Conditions Met?
YES
Modulate fuel request and monitor voltage activity
UEGO ASIC or smart driver indicates malfunction or current < or > threshold?
NO
Front O2 Sensor Voltage Or Front O2 Sensor Response Time
O2 Sensor Voltage Magnitude > threshold ? Or O2 Sensor Response Time < threshold ?
NO
YES
END
YES
Fault management – MIL after 2 driving cycles w/ malfunction
MIL

Rear HO2S Monitor

Rear HO2S Signal

A functional test of the rear HO2S sensors is done during normal vehicle operation. The peak rich and lean voltages are continuously monitored. Voltages that exceed the calibratable rich and lean thresholds indicate a functional sensor. If the voltages have not exceeded the thresholds after a long period of vehicle operation, the air/fuel ratio may be forced rich or lean in an attempt to get the rear sensor to switch. This situation normally occurs only with a green catalyst (< 500 miles). If the sensor does not exceed the rich and lean peak thresholds, a malfunction is indicated.

2005 MY and beyond vehicles will monitor the rear HO2S signal for high voltage, in excess of 1.1 volts and store a unique DTC. (P0138, P0158). An over voltage condition is caused by a HO2S heater or battery power short to the HO2S signal line.

Some Partial Zero Emission Vehicles (PZEV Focus) may utilize three sets of HO2S sensors. The front sensors (HO2S11/HO2S21) are the primary fuel control sensors. The next sensors downstream in the exhaust are utilized to monitor the light-off catalyst (HO2S12/HO2S22). The last sensors downstream in the exhaust (HO2S13/Ho2S23) are utilized for very long term fuel trim in order to optimize catalyst efficiency (Fore Aft Oxygen Sensor Control). Ford's first PZEV vehicle uses a 4-cylinder engine so only the Bank 1 DTCs are utilized.

Rear HO2S Functional Check Operation:	
DTCs Sensor 2	P2270 HO2S12 Signal Stuck Lean P2271 HO2S12 Signal Stuck Rich
Monitor execution	once per driving cycle for activity test
Monitor Sequence	> 30 seconds time in lack of movement test (UEGO only), > 30 seconds time in lack of switch test, front HO2S/UEGO response test complete
Sensors OK	ECT, IAT, MAF, VSS, TP, ETC, FRP, DPFE EGR, VCT, VMV/EVMV, CVS, FTP, CKP, CMP, ignition coils, injectors, no misfire DTCs, no system failures affecting fuel, no EVAP gross leak failure, UEGO/HO2S (front and rear) heaters OK, no "lack of switching" malfunction, no "lack of movement" malfunction (UEGO only), no UEGO/HO2S (front and rear) circuit malfunction, no UEGO FAOS monitor malfunction, no front HO2S/UEGO response rate malfunction
Monitoring Duration	continuous until monitor completed

ED_002078G_00001322-00359

Typical Rear HO2S functional check entry conditions:		
Entry condition	Minimum	Maximum
Stream 1 HO2S not in CSD recovery mode		
Flex Fuel Composition not changing		
Not in Phase 0 of Evaporative System Monitor		
No Purge System reset		
Purge intrusive test not running		
Not performing CSER spark retard		
Engine Coolant Temp	125 °F	240 °F
Intake Air Temp		140 °F
Time since entering closed loop fuel	10 seconds	
Inferred Catalyst Midbed Temperature		1600 °F
Heater-on Inferred Sensor(s) 2/3 HO2S Temperature Range	400 °F	1400 °F
Sensor(s) 2/3 HO2S heater-on time	90 seconds	
Short Term Fuel Trim Range	-5%	5%
Fuel Level (forced excursion only)	15%	
Inferred exhaust temperature range	400 °F	1400 °F
Throttle position	Part throttle	
Engine RPM (forced excursion only)	1000 rpm	2000 rpm
Battery Voltage	11.0 Volts	18.0 Volts

Typical Rear HO2S functional check malfunction thresholds:
Does not exceed rich and lean threshold envelope: Rich < 0.42 volts Lean > 0.48 volts

J1979 Rear HO2S Functional Check Mode $06 Data			
Monitor ID	Test ID	Description for CAN	
$02	$01	HO2S12 sensor switch-point voltage	volts
$06	$01	HO2S22 sensor switch-point voltage	volts
$03	$01	HO2S13 sensor switch-point voltage	volts
$07	$01	HO2S23 sensor switch-point voltage	volts

ED_002078G_00001322-00360

Rear HO2S "Over Voltage Test" Operation:	
DTCs	P0138 HO2S12 Over voltage
Monitor execution	continuous
Monitor Sequence	None
Sensors OK	rear HO2S heaters OK
Monitoring Duration	10 seconds to register a malfunction

Typical HO2S "Over Voltage Test" entry conditions:		
Entry condition	Minimum	Maximum
Inferred Stream 2 HO2S Temperature	400 °F	
Battery Voltage	11.0 Volts	18.0 Volts

Typical HO2S "Over Voltage Test" malfunction thresholds:
> 1.1 volts for 10 seconds for over voltage test

ED_002078G_00001322-00361

Rear HO2S Decel Fuel Shut Off Response Test

The catalyst monitor tracks and uses the length of the rear HO2S signal. The rear HO2S is also known as the Catalyst Monitor Sensor (CMS). As the catalyst ages, air/fuel fluctuations begin to break through the catalyst and the length of this signal increases. Eventually the length of the CMS signal becomes long enough to identify a failure for the catalyst monitor.

When an HO2S sensor degrades, it's response to air/fuel fluctuations slows down. The effect of a slow rear HO2S sensor on the catalyst monitor is to reduce the length of the signal. A slow CMS sensor, therefore, may cause the catalyst monitor to incorrectly pass a failed catalyst. The purpose of the Rear DFSO Response diagnostic is to ensure the catalyst monitor has a valid CMS sensor with which to perform the catalyst monitor diagnostic. The monitor is set to trigger at the level of degradation that will cause the catalyst monitor to falsely pass a malfunction threshold catalyst.

The OBD-II regulations require this monitor to utilize Decel Fuel Shut Off (DFSO). Ford plans to aggressively use DFSO starting in the 2009 MY on many applications to improve fuel economy. The DFSO rear O2 response test will be phased in coincident with this feature.

The main part of the test is the measured rich to lean response rate. It is determined by a "slew" rate calculation which determines the rich to lean slope of the sensor during a Decel Fuel Shut Off (DFSO) event which occurs during closed pedal at vehicle speeds higher than 28 mph. The calculation for the slew rate (mV/sec) is illustrated below.

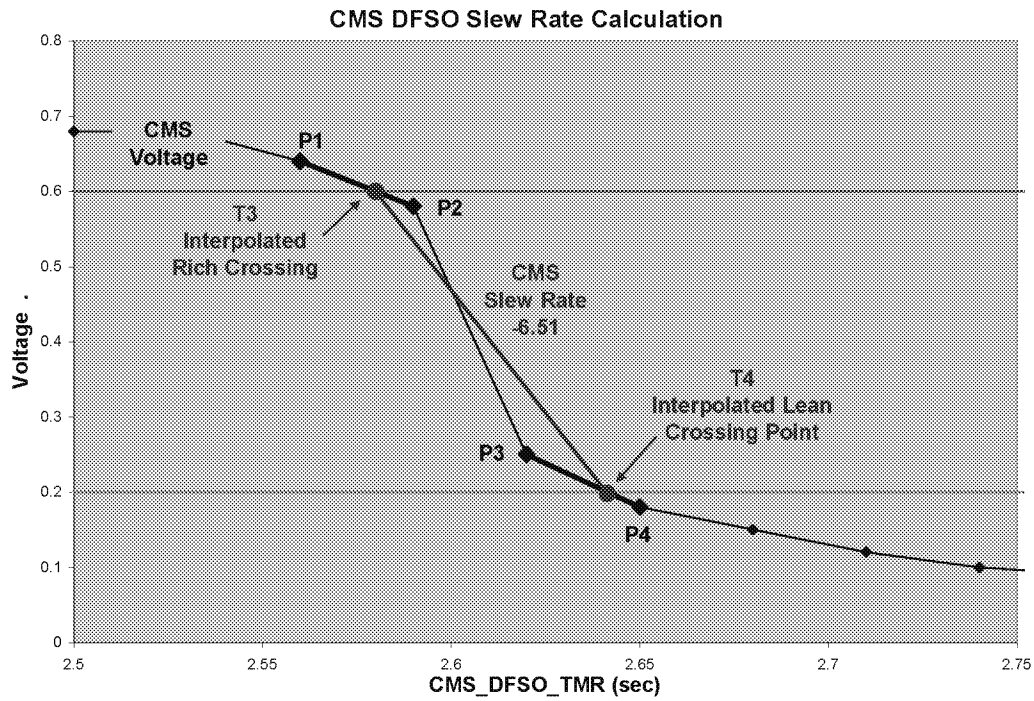

Linear interpolation is performed to calculate the Slew Rate.

1. Interpolate between points P1 and P2 to determine the time at which the rich limit threshold of 0.6 volts was crossed.

2. Interpolate between points P3 and P4 to determine the time at which the lean limit threshold of 0.2 volts was crossed.

3. Use the Interpolated times and the thresholds to calculate the slope or "slew rate" of the CMS sensor from 0.6 to 0.2 volts.

ED_002078G_00001322-00362

Diagnostic Data Acquisition Event Plot is a schematic of what happens when the pedal is closed and the engine enters DFSO.

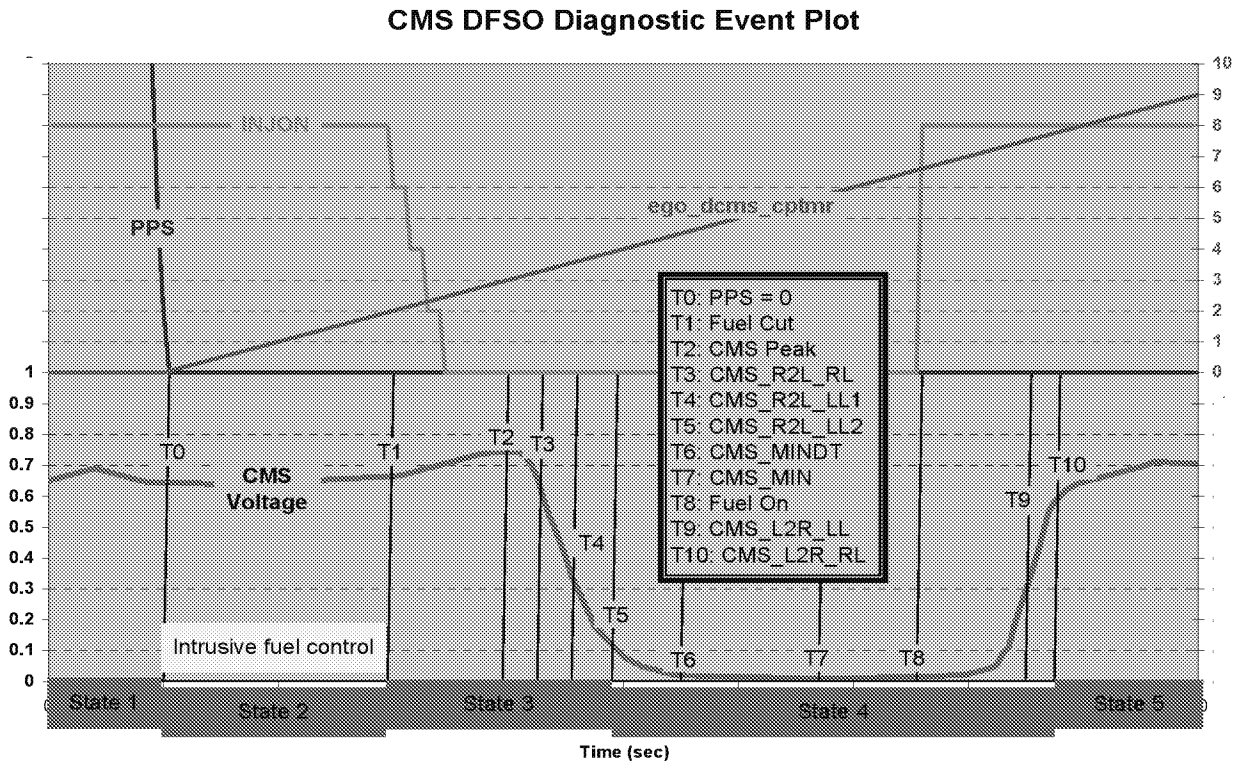

The top half of the graph shows the following signals:

Closed pedal timer (ego_dcms_cptmr).

PPS (Pedal Position Sensor)

INJON (# of fuel injectors turned on)

The bottom half of the graph shows a CMS signal with black lines and a "Tx" number representing all of the points of interest where the monitor captures data.

ED_002078G_00001322-00363

The monitor measures the CMS Rich to Lean slew rate during a DFSO event. The CMS voltage must be rich prior to the injector cut for a valid measurement event. Each fuel cut can only yield 1 valid event. The monitor will complete after 3 valid events. Additional valid event results will be stored and applied over the next drive cycle if necessary for monitor completion.

The slope or slew rate of the CMS sensor going from rich to lean is a negative number with the units of mVolts/sec. The measured slew rate changes as an O2 sensor degrades, but it will also change as a function of catalyst oxygen storage/age; therefore, the slew rate is normalized using an offset based on catalyst oxygen storage/age. The catalyst oxygen storage/age is calculated by integrating the level of oxygen mass in the exhaust stream from the time the injectors turn off to the time where the slew rate calculation begins. The fault line (red line in the chart below) is calibrated to 80% of the fault distribution for various levels of oxygen storage/catalyst age. As shown below, the integrated oxygen mass becomes smaller with catalyst age.

The final output of the monitor = the measured slew rate – normalized fault line, therefore, any positive number will represent a fault. For the step change logic the fault threshold will represent 50% of the failed distribution (~ 0.3).

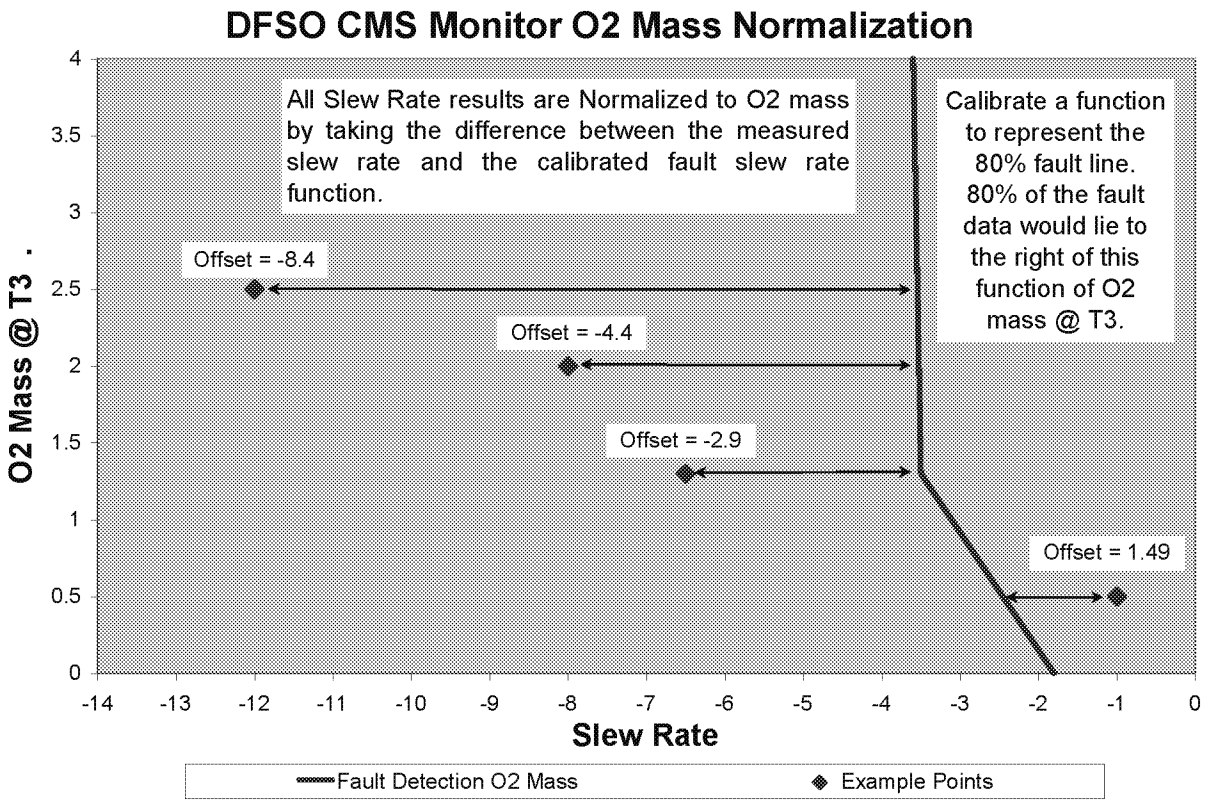

The delayed response part of the test indicates that the sensor is stuck in range. The code sets if the sensor can't get above a calibrated rich or lean voltage prior to a calibrated time out period. This time out must happen three times in a row to set the fault. If it happens once or twice and then the response monitor completes, the counter will be reset and the sensor will have to fail 3 times in a row to again set the DTC.

Due to the fact that intrusively driving the CMS sensor rich will cause drivability and emission concerns, there are other several condition counters that have to fail prior to intrusively forcing the sensor to go rich. The sequence of events to get to the rich failure is shown below:

- Initially, in order to avoid excess emissions, the monitor will only run if the CMS voltage is rich (> 0.6 volts) or CMS sensor is transitioning from lean to rich (large positive slope . 0.2).
    - Successive failures are counted up; when the count exceeds 5 to 10 failures the monitor will now intrusively force rich fuel to run the test.
- In order to avoid a drivability issues as a result of a lean shifted bank, the first phase of intrusive control has a short time out (1 to 2 seconds).
    - Successive failures are counted up; when the count exceeds 3 failures the monitor will now intrusively force rich fuel to failure or a rich sensor.
- All controllable measures have failed to force the sensor to switch, so the strategy will drive rich until the sensor switches or the failure time out is exceeded (5 to 10 seconds).
    - Successive failures are counted up; when the count exceeds 3 failures the monitor will now set a fault (P013E for bank 1 or P014A for bank 2).

If the sensor is stuck rich (can't get lean) the fault procedure is:

- While the injectors remain off, the sensor must get lean (<0.1 volts) prior to the failure time which must be set to account for a green catalyst (5 to 10 seconds).
    - Successive failures are counted up; when the count exceeds 3 failures the monitor will now set a fault (P013E for bank 1 or P014A for bank 2).

EWMA Fault Filtering

The EWMA logic incorporates several important CARB requirements. These are:

- Fast Initial Response (FIR): The first 4 tests after a battery disconnect or code clear will process unfiltered data to quickly indicate a fault. The FIR will use a 2-trip MIL. This will help the service technician determine that a fault has been fixed.

- Step-change Logic (SCL): The logic will detect an abrupt change from a no-fault condition to a fault condition. The SCL will be active after the 4th DCMS monitor cycle and will also use a 2-trip MIL. This will illuminate the MIL when a fault is instantaneously induced.

- Normal EWMA (NORM): This is the normal mode of operation and uses an Exponentially Weighted Moving Average (EWMA) to filter the EONV test data. It is employed after the 4th EONV test and will illuminate a MIL during the drive cycle where the EWMA value exceeds the fault threshold. (1 trip MIL).

ED_002078G_00001322-00365

Rear O2 **DFSO Response Monitor Operation:**	
DTCs	P013A - O2 Sensor Slow Response - Rich to Lean (Bank 1 Sensor 2) P013E - O2 Sensor Delayed Response - Rich to Lean (Bank 1 Sensor 2) (sensor stuck in range)
Monitor execution	Once per driving cycle, after 3 DFSO events.
Monitor Sequence	> 30 seconds time in lack of movement test (UEGO only), > 30 seconds time in lack of switch test, front HO2S/UEGO response test complete, HO2S 2 and 3 functional tests complete, HO2S/UEGO heater voltage and current checks complete, FAOS monitor system bias maturity met (UEGO applications only)
Sensors OK	ECT, IAT, MAF, VSS, TP, ETC, FRP, EGR, VCT, VMV/EVMV, CVS, FTP, CKP, CMP, ignition coils, injectors, no misfire DTCs, no system failures affecting fuel, no EVAP gross leak failure, UEGO heaters OK, rear HO2S heaters OK, no "lack of switching" malfunction, no "lack of movement" malfunction, no UEGO circuit malfunction, no rear stream 2 HO2S circuit malfunction, no rear stream 2 HO2S functional DTCs, Not performing CSER spark retard. Flex fuel composition not changing. No intrusive EGO monitors running.
Monitoring Duration	3 DFSO events.

Typical DFSO Response Monitor entry conditions:		
Entry condition	Minimum	Maximum
Air Mass	0.2	7
Vehicle Speed		90
Inlet Air Temp		140
Engine Coolant Temp	130 °F	240 °F
Catalyst Temperature (Inferred)	800 °F	1600 °F
Rear Ego Tip Temperature (Inferred)	800 °F	
Fuel Level	15%	
Fuel In Control	-9%	5%
Adaptive Fuel Within Limits	-5%	5%
Battery Voltage	11.0 Volts	18.0 Volts
Rich Voltage on downstream CMS sensor(s)	0.6 Volts	
Rich Voltage on upstream HEGO / UEGO sensor(s)	0.45 Volts (HEGO)	1 (UEGO)

ED_002078G_00001322-00366

Typical DFSO response rate malfunction thresholds:
Rich to lean slew rate thresholds: Normal Threshold = > 0.0 mV/sec Fast Initial Response Threshold = > 0.0 mV/sec Step Change Threshold = > 0.3 mV/sec Note that the thresholds use a normalized offset and the threshold is set at "zero".

Typical DFSO delayed response malfunction thresholds:
Successive failures are counted up (5 to 10 faults). Monitor will now intrusively force rich fuel to run the test. Intrusive controls will time out based on drivability (1 to 2 sec). Successive drivability failures are counted up (3 faults). Intrusive controls will now time out at a slower time (5 to 10 sec) and count a fault. After 3 faults are counted, a DTC is set.

J1979 DFSO response rate Mode $06 Data

Monitor ID	Test ID	Description for CAN	
$02	$85	HO2S12 Fuel Shut off Rich to Lean Response Rate	mV/sec
$02	$86	HO2S12 Fuel Shut off Rich to Lean Response Time	msec
$06	$85	HO2S22 Fuel Shut off Rich to Lean Response Rate	mV/sec
$06	$86	HO2S22 Fuel Shut off Rich to Lean Response Time	msec

ED_002078G_00001322-00367

Rear HO2S Heaters,

The HO2S heaters are monitored for proper voltage and current. A HO2S heater voltage fault is determined by turning the heater on and off and looking for corresponding voltage change in the heater output driver circuit in the PCM.

A separate current-monitoring circuit monitors heater current once per driving cycle. The heater current is actually sampled three times. If the current value for two of the three samples falls below a calibratable threshold, the heater is assumed to be degraded or malfunctioning. (Multiple samples are taken for protection against noise on the heater current circuit.)

HO2S Heater Monitor Operation:	
DTCs Sensor 2	P0141 O2 Heater Circuit, Bank 1 P0054 O2 Heater Resistance, Bank 1
Monitor execution	once per driving cycle for heater current, continuous for voltage monitoring
Monitor Sequence	Heater current monitor: Stream 1 HO2S/UEGO response test complete, Stream 2 and 3 HO2S functional tests complete, HO2S/UEGO heater voltage check complete
Sensors OK	Heater current monitor: no HO2S/UEGO heater voltage DTCs
Monitoring Duration	< 10 seconds for heater voltage check, < 5 seconds for heater current check

Typical HO2S heater monitor entry conditions:		
Entry condition	Minimum	Maximum
Inferred HO2S 2/3 Temperature (heater voltage check only)	400 °F	1400 °F
Inferred HO2S 2 Temperature (heater current check only)	250 °F	1400 °F
Inferred HO2S 3 Temperature (heater current check only)	250 °F	1400 °F
HO2S 1/2/3 heater-on time (heater current check only)	30 seconds	
Engine RPM (heater current check only)		5000 rpm
Battery Voltage (heater voltage check only)	11.0	18.0 Volts

ED_002078G_00001322-00368

Typical HO2S heater check malfunction thresholds:	
Smart driver status indicated malfunction	
Number monitor retries allowed for malfunction > = 30	
Heater current outside limits:	< 0.220 amps or > 3 amps, (NTK)
	< 0.400 amps or > 3 amps, (Bosch)
	< 0.465 amps or > 3 amps, (NTK Fast Light Off)
	< 0.230 amps or > 3 amps, (Bosch Fast Light Off)

J1979 HO2S Heater Mode $06 Data			
Monitor ID	Test ID	Description for CAN	Units
$02	$81	HO2S12 Heater Current	Amps
$06	$81	HO2S22 Heater Current	Amps
$03	$81	HO2S13 Heater Current	Amps
$07	$81	HO2S23 Heater Current	Amps

ED_002078G_00001322-00369

Stepper Motor EGR System Monitor

The Electric Stepper Motor EGR System uses an electric stepper motor to directly actuate an EGR valve rather than using engine vacuum and a diaphragm on the EGR valve. The EGR valve is controlled by commanding from 0 to 52 discreet increments or “steps” to get the EGR valve from a fully closed to fully open position. The position of the EGR valve determines the EGR flow. Control of the EGR valve is achieved by a non-feedback, open loop control strategy. Because there is no EGR valve position feedback, monitoring for proper EGR flow requires the addition of a MAP sensor.

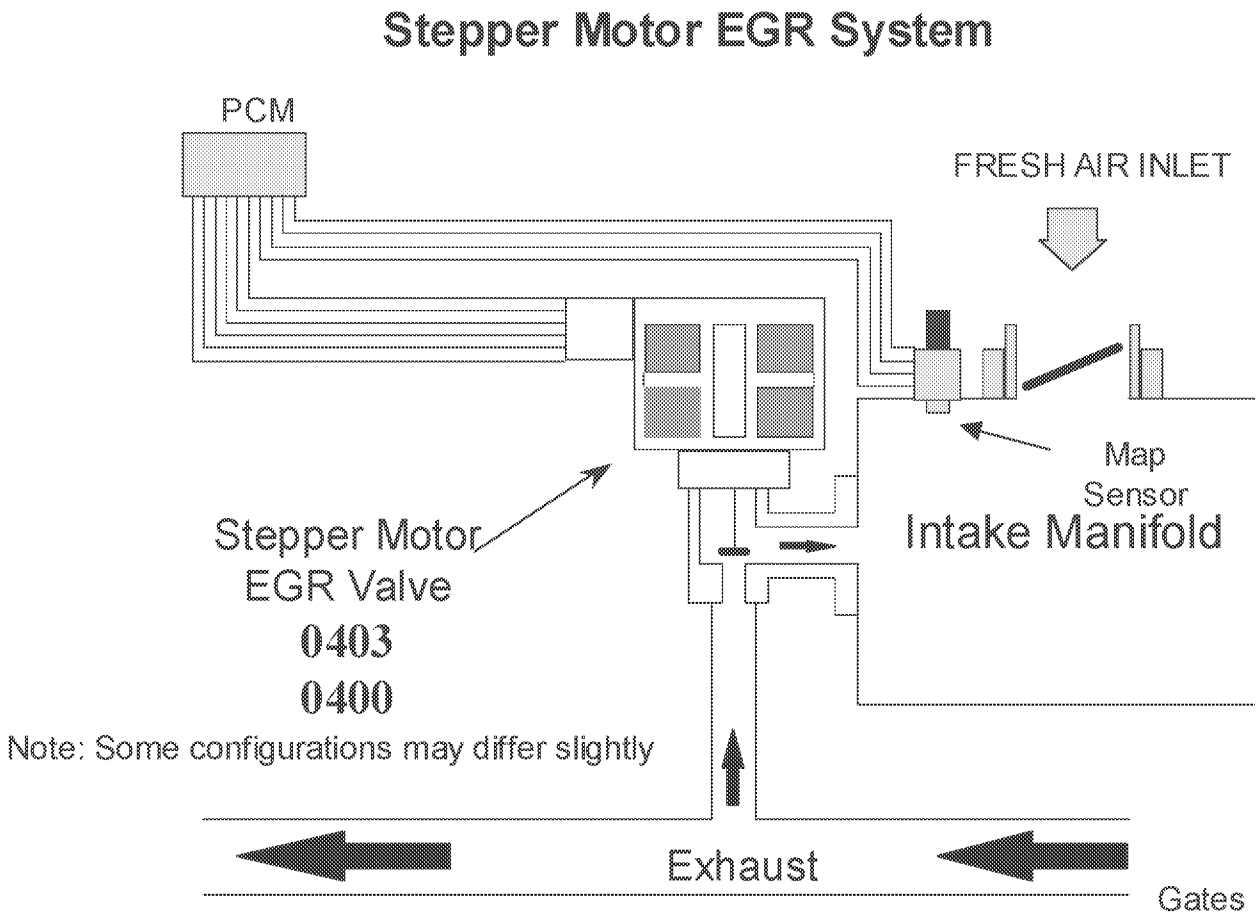

ED_002078G_00001322-00370

The Stepper Motor EGR Monitor consists of an electrical and functional test that checks the stepper motor and the EGR system for proper flow.

The stepper motor electrical test is a continuous check of the four electric stepper motor coils and circuits to the PCM. A malfunction is indicated if an open circuit, short to power, or short to ground has occurred in one or more of the stepper motor coils for a calibrated period of time. If a malfunction has been detected, the EGR system will be disabled, and additional monitoring will be suspended for the remainder of the driving cycle, until the next engine start-up.

EGR Stepper Monitor Electrical Check Operation:	
DTCs	P0403
Monitor execution	continuous
Monitor Sequence	none
Sensors OK	
Monitoring Duration	4 seconds to register a malfunction

Stepper motor electrical check entry conditions:
Battery voltage > 11.0 volts

Typical EGR electrical check malfunction thresholds:
“Smart” Coil Output Driver status indicates open or short to ground, or short to power

EGR flow is monitored using an analog Manifold Absolute Pressure Sensor (MAP). If a malfunction has been detected in the MAP sensor, the EGR monitor will not perform the EGR flow test.

The MAP sensor is checked for opens, shorts, or out-of-range values by monitoring the analog-to-digital (A/D) input voltage.

MAP Sensor Check Operation	
DTCs	P0107 (low voltage), P0108 (high voltage)
Monitor execution	continuous
Monitor Sequence	none
Sensors OK	not applicable
Monitoring Duration	5 seconds to register a malfunction

MAP electrical check entry conditions:
Battery voltage > 11.0 volts

Typical MAP sensor check malfunction thresholds:
Voltage < 0.19 volts or voltage > 4.88 volts

The MAP sensor is also checked for rational values. The value of inferred MAP is checked against the actual value of MAP at idle and non-idle engine operating conditions.

MAP Sensor Rationality Check Operation	
DTCs	P0106
Monitor execution	continuous
Monitor Sequence	None
Sensors OK	not applicable
Monitoring Duration	10 seconds to register a malfunction

Typical MAP Rationality check entry conditions:		
Entry Conditions	Minimum	Maximum
Change in load		5%
Engine rpm	975 rpm	1650 rpm
Throttle Angle	1.5 degrees	83 degrees

Typical MAP Rationality check malfunction thresholds:
Difference between inferred MAP and actual MAP > 8 in Hg

The MAP sensor is also checked for intermittent MAP faults.

MAP Sensor Intermittent Check Operation	
DTCs	P0109 (non-MIL)
Monitor execution	Continuous
Monitor Sequence	None
Sensors OK	not applicable
Monitoring Duration	2 seconds to register a malfunction

Typical MAP Intermittent check malfunction thresholds:
Voltage < 0.024 volts or voltage > 4.96 volts

When EGR is delivered into the intake manifold, intake manifold vacuum is reduced and thus manifold absolute pressure (MAP) is increased. A MAP sensor and inferred MAP are used by this monitor to determine how much EGR is flowing. A MAP sensor located in the intake manifold measures the pressure when EGR is being delivered and when EGR is not being delivered. The pressure difference between EGR-on and EGR-off is calculated and averaged. If the vehicle also has a MAF sensor fitted, then the monitor also calculates and averages an inferred MAP value in the above calculation and resulting average. After a calibrated number of EGR-on and EGR-off cycles are taken, the measured and inferred MAP values are added together and compared to a minimum threshold to determine if a flow failure (P0400) in the EGR system has occurred.

EGR Flow Check Operation:	
DTCs	P0400
Monitor execution	once per driving cycle
Monitor Sequence	None
Sensors OK	CPS, ECT, IAT, MAF, MAP (P0106/7/8), TP, BARO not available yet
Monitoring Duration	200 seconds (600 data samples)

Typical EGR flow check entry conditions:		
Entry Condition	Minimum	Maximum
Inferred Ambient Air Temperature	38 °F	200 °F
Engine Coolant Temperature	130 °F	240 °F
Desired EGR ass	0.1 lbm/min	
Engine RPM Steady (change/0.100 sec)		250 rpm
MAP Steady (change/0.100 sec)		0.35 in Hg
Engine Load Steady (change/0.100 sec)		10 %
BARO	22.5 "Hg	
Intake Manifold Vacuum	3.5 "Hg	12.0 "Hg
Vehicle Speed	25 MPH	80 MPH
Engine Throttle Angle steady(absolute change)	0.0 degrees	4.0 degrees
Purge Flow Rate		1 lbs/min

Typical EGR flow check malfunction thresholds:
< 1.0 MAP differential

J1979 Mode $06 Data			
Monitor ID	Test ID	Description for CAN	Units
$33	$82	Normalized MAP differential (range 0 – 2)	None

I/M Readiness Indication

If the inferred ambient temperature is less than 20 °F, greater than 130 °F, or the altitude is greater than 8,000 feet (BARO < 22.5 "Hg), the EGR flow test cannot be reliably done. In these conditions, the EGR flow test is suspended and a timer starts to accumulate the time in these conditions. If the vehicle leaves these extreme conditions, the timer starts decrementing, and, if conditions permit, will attempt to complete the EGR flow monitor. If the timer reaches 800 seconds, the EGR flow test is disabled for the remainder of the current driving cycle and the EGR Monitor I/M Readiness bit will be set to a “ready” condition after one such driving cycle. Two such consecutive driving cycles are required for the EGR Monitor I/M Readiness bit to be set to a "ready" condition.

ED_002078G_00001322-00374

PCV System Monitor

The PCV valve is installed into an oil separator that is bolted to the side of the block. The PCV valve is designed to last the full useful life of the engine and is not designed to be removed from the oil separator. The PVC valve is connected to the intake manifold hose using a quick connect. Because the PCV valve cannot be removed from the oil separator, the quick connect will be disconnected in the event vehicle service is required. Molded plastic lines are used from the PCV valve to the intake manifold. The diameter of the lines and the intake manifold have been increased to 0.625" so that inadvertent disconnection of the quick connect will cause either an immediate engine stall or will not allow the engine to be restarted. The crank case ventilation hose on the cam cover is connected to the air induction system using quick connects. The cam cover also incorporates an oil separator.

In the event that the vehicle does not stall if the line between the intake manifold and PCV valve is disconnected, the vehicle will have a large vacuum leak that will cause the vehicle to run lean at idle. This will illuminate the MIL after two consecutive driving cycles and will store one or more of the following codes: Lack of O2 sensor switches, Bank 1 (P2195), Fuel System Lean, Bank 1 (P0171) and MAP/Baro sensor intermittent (P0109).

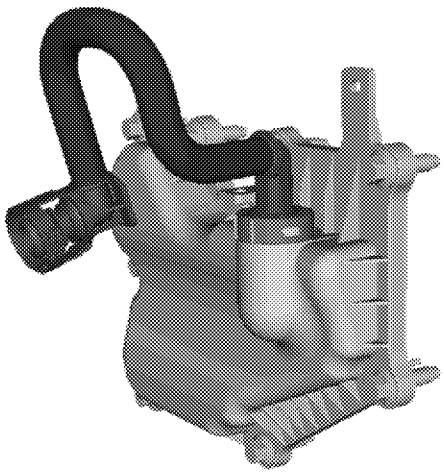

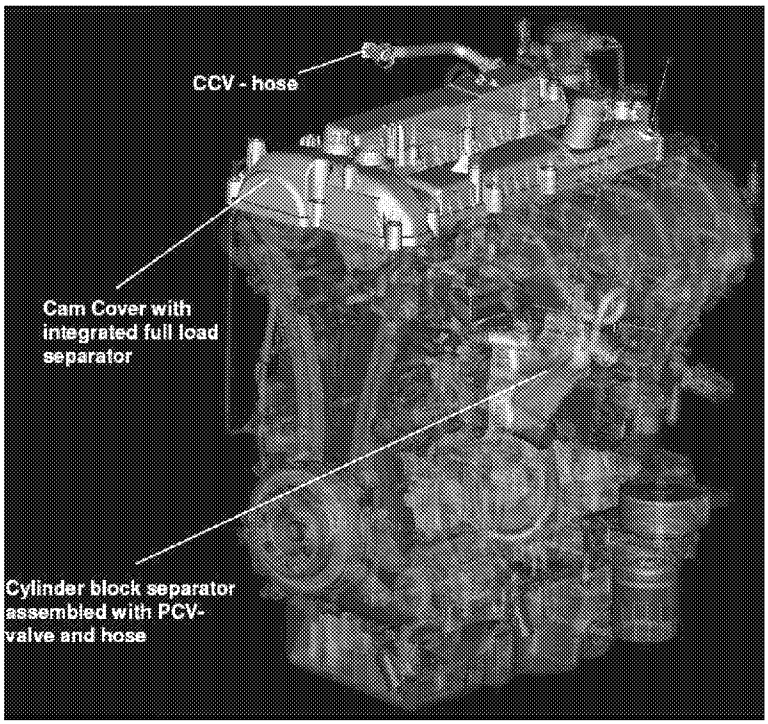

ED_002078G_00001322-00375

Enhanced Thermostat Monitor

For the 2009 MY, the thermostat test has been enhanced to reduce the time it takes to identify a malfunctioning thermostat. The enhanced monitor includes a model which infers engine coolant temperature.

During a cold start, when the thermostat should be closed, the monitor uses a model of ECT to determine whether actual ECT should have crossed the Warm Up Temperature (WUT) threshold.

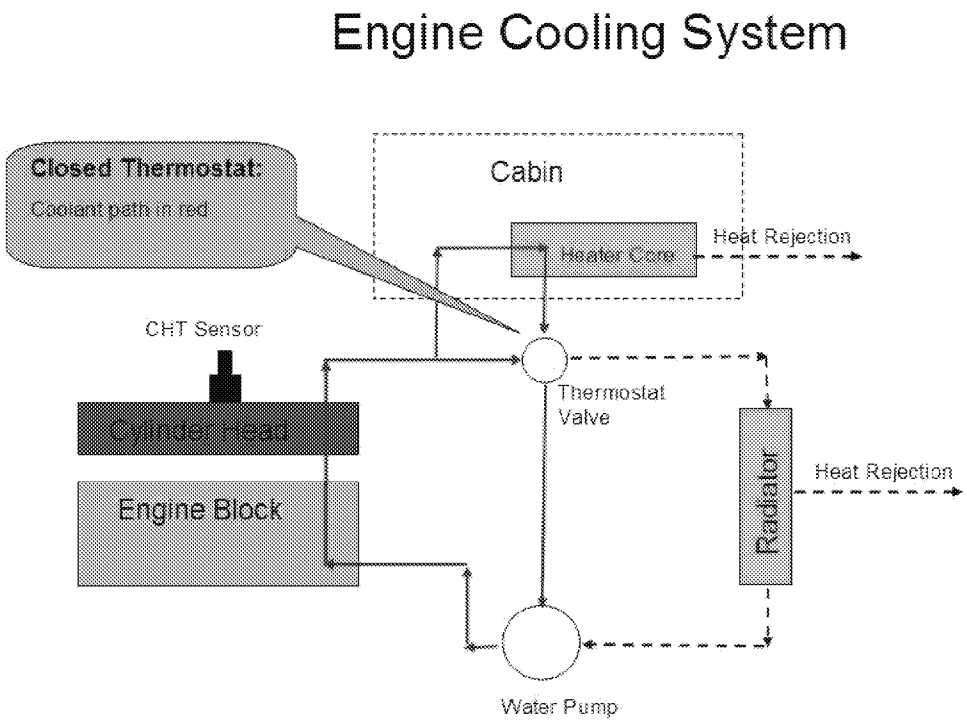

Once the ECT model exceeds the thermostat regulating temperature for 3 seconds, measured ECT is compared to the WUT threshold to determine if ECT has warmed up enough. If ECT has warmed up to at least the WUT threshold, the thermostat is functioning properly. If ECT is too low, the thermostat is most likely stuck open and a P0128 is set.

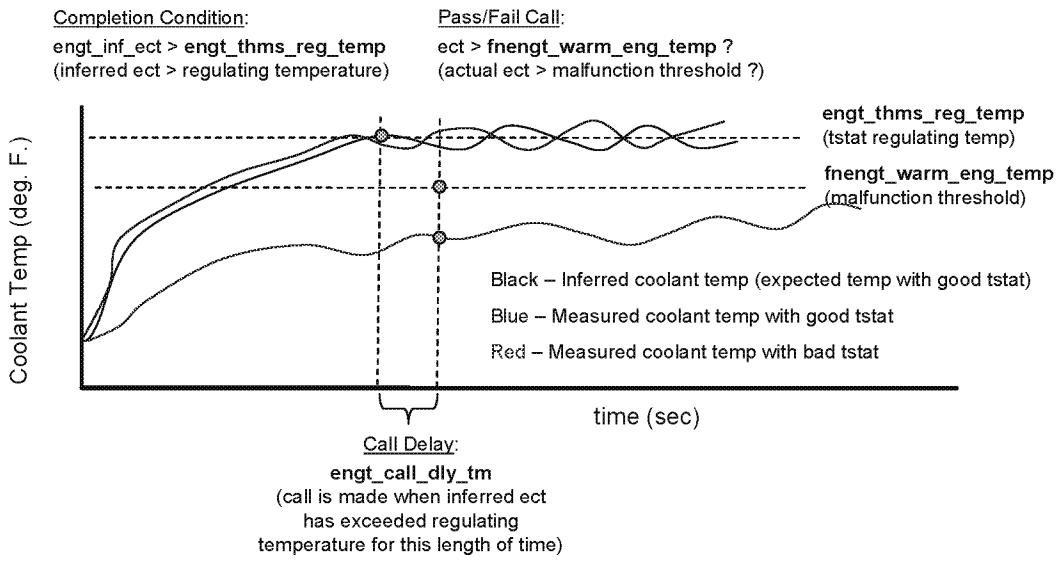

The WUT threshold is normally set to 20 degrees F below the thermostat regulating temperature.

ED_002078G_00001322-00376

There are some circumstances that could lead to a false diagnosis of the thermostat. These are conditions where the vehicle cabin heater is extracting more heat than the engine is making. One example where this can occur is on large passenger vans which have "dual" heaters, one heater core for the driver and front passengers and another heater core for the passengers in the rear of the vehicle. At very cold ambient temperatures, even a properly functioning thermostat may never warm up to regulating temperature. Another example is a vehicle that is started and simply sits at idle with the heater on high and the defroster fan on high.

There are two features that are used to prevent a false thermostat diagnosis. For vehicles with dual heaters, the WUT threshold is reduced at cold ambient temperatures below 50 deg F. For cases where the engine is not producing sufficient heat, a timer is used to track time at idle or low load conditions (e.g. decels). If the ratio of time at idle/low load versus total engine run time exceeds 50% at the time the fault determination is made, the thermostat diagnostic does not make a fault determination for that driving cycle, i.e. "no-call".

THERMOSTAT MONITOR OPERATION	
DTC	P0128 - Coolant Thermostat (Coolant temperature below thermostat regulating temperature)
Monitor Execution	Once per driving cycle, during a cold start
Monitoring Duration	Drive cycle dependent. Monitor completes in less than 300 seconds when inferred ECT exceeds threshold(at 70 deg F ambient temperature)

TYPICAL THERMOSTAT MONITOR ENTRY AND COMPLETION CONDITIONS		
Entry conditions	Minimum	Maximum
Engine Coolant Temperature at start	None	125 °F
Intake Air Temperature at start (ambient temp)	20 °F	None
Inferred Percent Ethanol (flex fuel vehicles only)	Learned	N/A
Completion condition	Minimum	Maximum
Modeled ECT	180 °F	None
Time Since Modeled ECT Exceeded WUT Threshold	3 sec.	None
Time at Idle/Low Load Compared with Total Engine Run Time	None	50%

TYPICAL MALFUNCTION THRESHOLD
Engine Coolant Temperature < 160 °F (for the 180 °F thermostat)

ED_002078G_00001322-00377

HEV/PHEV Cooling System Diagnostics

The cooling system in the Plug-in Hybrid has been designed to include two functional cooling loops. This system is designed to maximize cooling efficiency when the vehicle is running on either the gas engine or the electric motor. The system operates in one of two different modes.

The first mode is the main or "combined" cooling loop mode which provides coolant flow through both the gas engine and the cabin heater core. While in this loop, both the gas engine and an electric heater can be used to maximize the heat transfer to the coolant thus providing both an increase in the engine metal temperature and heat for the vehicle cabin.

The second cooling mode is the "isolated" loop mode where coolant flow through the cabin heater core is isolated from the engine block. This loop is intended to provide cabin heat when the gas engine is not running. Coolant flow is maintained in the "combined" loop by default (isolation valve de-energized), and by energizing the isolation valve coolant flow is maintained in the "isolated" loop.

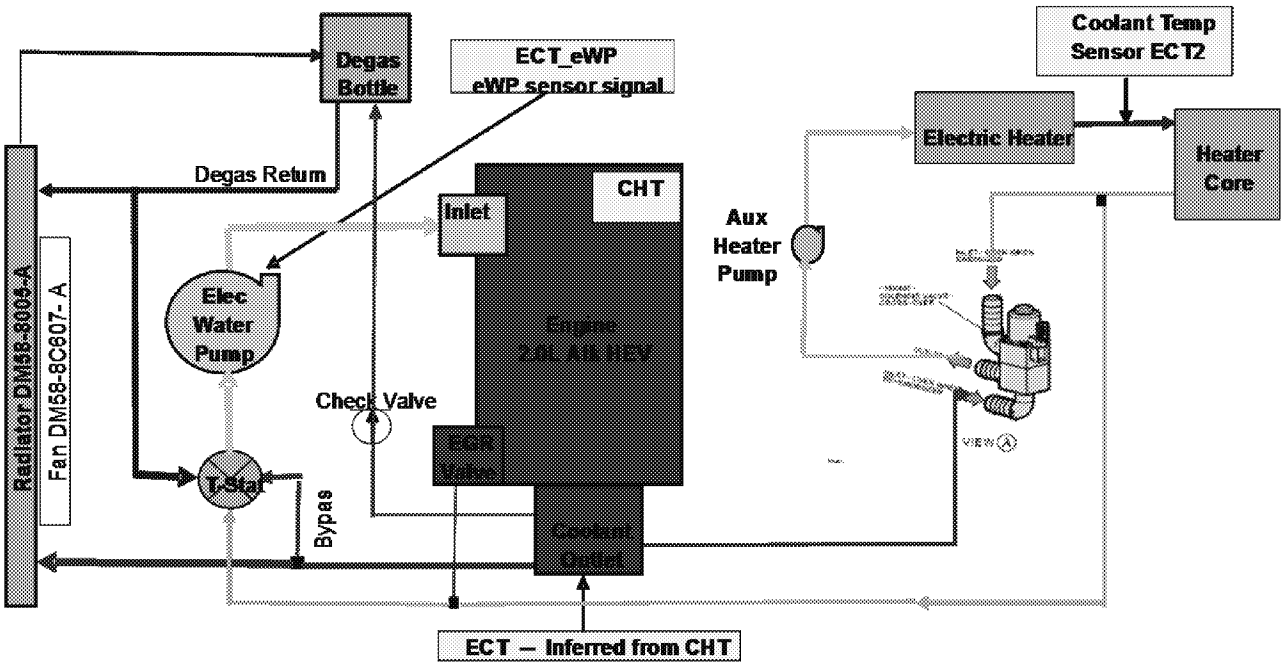

While in the "combined" cooling loop, coolant flow is maintained by a PCM-controlled Engine Coolant Pump (internally known as the electric Water Pump (eWP)). The Engine Coolant Pump is a pulse width modulated pump that can be used to control coolant flow rates independent of engine speed. This allows the PCM to maximize fuel economy by minimizing cooling system power consumption as compared to a traditional belt-driven water pump. Additionally, it can be used to improve engine metal temperature heating/cooling rates. Even though the Engine Coolant Pump can provide coolant flow while the engine is off, it's primary purpose is to provide coolant flow while the engine is running. A low power consumption auxiliary water pump in the "isolation" loop is the primary source of coolant flow for cabin heating when the vehicle is operating in electric mode.

ED_002078G_00001322-00378

The Engine Coolant Bypass Valve position determined whether the cooling system operates in a combined loop (engine-heated coolant flowing through the heater core) or in an isolated loop (engine is off, cabin heat provided by PTC heater). The ECBV is checked for circuit faults and for actual valve position after the valve is determined to be electrically failed.

Engine Coolant Bypass Valve Circuit check operation	
DTCs	P2682 – Engine Coolant Bypass Valve "A" Control Circuit Low P2683 - Engine Coolant Bypass Valve "A" Control Circuit High P26AB - Engine Coolant Bypass Valve "A" Stuck/Open (valve stuck in combined loop)
Monitor execution	Continuous
Monitor Sequence	None for P2682/P2683 P2682 must set before P26AB will complete
Monitoring Conditions	
Monitoring Duration	5 seconds to register a malfunction

Typical Engine Coolant Bypass Valve Circuit malfunction thresholds:
P2682: Driver indicates circuit fault > 5 sec
P2683: Driver indicated circuit fault > 5 sec
P26AB: ECT2 - ECT >5 deg F within 60 seconds of circuit fault

The Engine Coolant Pump (eWP) is a smart pump with four pins. Two of the pins are connected directly to battery power and electrical ground. The other circuits are connected to the PCM. One is connected to the LIN bus (primary PCM control) and the other is called the Emergency Run Input (ERI) line that can be used to control the pump with a PWM signal if the LIN bus goes down. This ERI line has been wired directly to ignition power so that the pump will be commanded to run any time the LIN bus is failed and ignition is on.

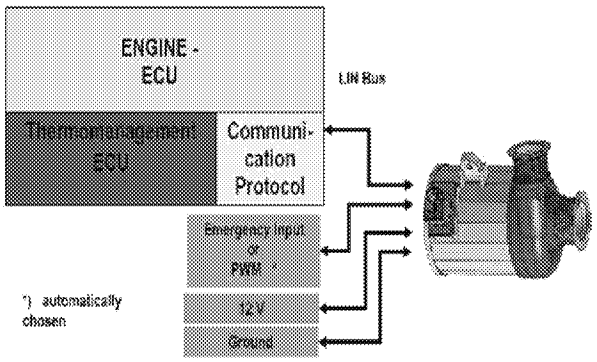

Figure 1: Electric water pump/motor assembly block diagram

Below is a summary of the diagnostics associated with the Engine Coolant Pump. Circuit faults for the LIN bus and ERI lines are detected by the PCM while the pump power and ground line faults are detected by the Engine Coolant Pump Control Module and communicated to the PCM through the LIN bus line. All mechanical faults are detected by the Engine Coolant Pump Control Module and also communicated to the PCM over the LIN bus.

The Engine Coolant Pump speed is controlled by the PCM and communicated to the Engine Coolant Pump Control Module over the LIN bus. A LIN bus communication fault (U019F) is set when the engine coolant pump speed echoed back from the Engine Coolant Pump Control Module doesn't match the desired speed sent from the PCM (requires no other electric water pump faults exist).

Engine Coolant Pump communication check operation	
DTCs	U019F - Lost Communication With Engine Coolant Pump Control Module
Monitor execution	Continuous
Monitor Sequence	None
Sensors OK	Over-temperature (P26D2), over-current (P26CB), blocked impeller (P26CB), or dry run (P26CE).
Monitoring Duration	10 seconds to register a malfunction

Typical Engine Coolant Pump communication check malfunction thresholds:
Difference between desired pump speed and actual pump speed > 300 RPM

ED_002078G_00001322-00380

Failures on the Emergency Run Input (ERI) line are detected by checking the status of the ERI line communicated to the PCM over LIN. Since the ERI line is hardwired to the vehicle ignition key, the returned ERI line state should always match the vehicle ignition state. When there is a mismatch, a DTC P26CA is set. This monitor requires that the LIN communications bus has not failed.

Engine Coolant Pump Emergency Run Input check operation	
DTCs	P26CA – Engine Coolant Pump Control Circuit/Open
Monitor execution	Continuous
Monitor Sequence	None
Monitoring Conditions	No LIN bus communication faults (U019F).
Monitoring Duration	5 seconds to register a malfunction

Typical Engine Coolant Pump Emergency Run Input check malfunction thresholds:
Difference between ERI state reported by ECPCM and actual ERI state at PCM

The Engine Coolant Pump power and ground line status is not communicated to the PCM by Engine Coolant Pump Control Module. Therefore, the status of these lines is inferred by the PCM. If either of these lines is faulted, the Engine Coolant Pump will not run, and there will no LIN bus communications from the Engine Coolant Pump Control Module to the PCM. The PCM first checks to see if a fault on the communication line (U019F). If the communication line is faulted and the engine coolant temperature is increasing then it is assumed that the pump is not running and a P26D3 DTC is set. If the engine coolant temperature is not increasing then the PCM identifies the communications fault only.

Engine Coolant Pump Control Module Power/Ground check operation	
DTCs	P26D3 – Engine Coolant Pump Supply Voltage Circuit
Monitor execution	Continuous
Monitor Sequence	None
Monitoring Conditions	None
Monitoring Duration	5 seconds to register a malfunction

Electric Water Pump Control Module Power/Ground Signal Fault malfunction thresholds:
LIN bus comm. fault (U019F) and accumulated engine coolant temp increase > 10°C

ED_002078G_00001322-00381

The Engine Coolant Pump Control Module can use the rpm feedback and current feedback to detect mechanical faults for a blocked impeller and a "dry run" condition, i.e. loss of coolant. These conditions are communicated back to the PCM over the LIN bus.

Engine Coolant Pump Mechanical Faults check operation	
DTCs	P26CB – Engine Coolant Pump Performance/Stuck Off P26CE – Engine Coolant Pump Overspeed
Monitor execution	Continuous Operation
Monitor Sequence	None
Monitoring Conditions	No LIN bus communication faults (U019F).
Monitoring Duration	5 seconds to register a malfunction

Engine Coolant Pump Mechanical Faults check operation malfunction thresholds:
P26CB: pump current too high, rpm too low for 4 restart events
P26CE: pump speed > 4909 rpm and current too low

The Engine Coolant Pump Control Module communicates the control module electronics voltage and temperature over the LIN bus to the PCM. The voltage is compared to the PCM system voltage to set DTCs P26D0 and P26D1. The temperature signal is checked for out-of-range high which sets a P26D2 DTC.

Engine Coolant Pump Control Module Electrical Faults check operation	
DTCs	P26D0 – Engine Coolant Pump Control Module System Voltage Low P26D1 – Engine Coolant Pump Control Module System Voltage High P26D2 - Engine Coolant Pump Control Module Over Temperature
Monitor execution	Continuous Operation
Monitor Sequence	None
Monitoring Conditions	No LIN bus communication faults (U019F).
Monitoring Duration	5 seconds to register a malfunction

E Engine Coolant Pump Control Module Electrical Faults malfunction thresholds:
P26D0 – ECPCM voltage < (PCM battery voltage plus 4 volts)
P26D1 – ECPCM voltage > (PCM battery voltage plus 4 volts)
P26D2 – ECPCM temperature > 130°C

ED_002078G_00001322-00382

Engine Speed and Spark Timing Component Monitor (2010 MY and beyond)

Entry Conditions and Monitor Flow

The System Monitor and 2010 Component Monitor share the same entry conditions and monitor flow. During the first 15 seconds of a cold start, the monitor checks the entry conditions, counts time in idle, observes catalyst temperature, calculates the average difference between desired and actual engine speed, and calculates the average difference between desired and commanded spark.

If the expected change in catalyst temperature is large enough, the monitor then begins the waiting period, which lasts until 300 seconds after engine start. This 5-minute wait allows time to diagnose other components and systems that affect the validity of the test. During this waiting period, there are no constraints on drive cycle and the monitor cannot be disabled without turning off the key.

If the System monitor result falls below its threshold and all of the Component monitor results are below their respective thresholds, the monitor determines whether the idle time was sufficient. If so, it considers the tests a pass and the monitor is complete. If idle time was not sufficient, the monitor does not make a pass call and does not complete. This prevents tip-ins from resulting in false passes.

Cold Start Engine Speed Monitor

Once the waiting period is complete, the monitor compares the average difference between desired and actual engine speeds to a calibratable threshold that is a function of ECT at start. If the magnitude of the discrepancy exceeds the threshold, P050A is set.

Cold Start Spark Timing Monitor

Once the waiting period is complete, the monitor compares the average difference between desired and commanded spark to a calibratable threshold that is a function of ECT at start. If the magnitude of the discrepancy exceeds the threshold, P050B is set.

CSER COMPONENT MONITOR OPERATION	
Component Monitor DTCs	P050A: Cold Start Idle Air Control System Performance P050B: Cold Start Ignition Timing Performance
Monitor Execution	Once per driving cycle, during a cold start
Monitor Sequence	Monitor data collection takes place during first 15 seconds of cold start
Sensors OK	No fault is present in any of the sensors or systems affecting the catalyst temperature model: Mass Air Flow (P0102, P0103), Throttle Position (P0122, P0123, P0222, P0223), Misfire (P0316, P0300-P0312), Injectors (P0201-P0212), Fuel System (P0171, P0172, P0174, P0175), Secondary Air (P0412, P2258), Crank Position Sensor (P0320), Ignition Coil (P0351-P0360), Intake Air Temp (P0112, P0113), Engine Coolant Temp/Cylinder Head Temp (P0117, P0118, P1289, P1290), Variable Cam Timing (P0010, P0020, P0011, P0012, P0021, P0022), Intake Manifold Runner Control (P2008).
Monitoring Duration	Monitor completes 300 seconds after initial engine start

ED_002078G_00001322-00383

TYPICAL CSER COMPONENT MONITOR ENTRY AND COMPLETION CONDITIONS		
Entry condition	Minimum	Maximum
Barometric Pressure	22 in. Hg	
Engine Coolant Temperature at Start	35 °F	100 °F
Catalyst Temperature at Start	35 °F	125 °F
Fuel Level	15%	
BARO	22.5" Hg	
No Torque Reduction by Injector Cutout		
Power Takeout Not Active		
Completion condition	Minimum	Maximum
Length of Time Entry Conditions are Satisfied	11 sec.	
Expected Change in Catalyst Temperature	50 °F	
Time in Idle	10 sec.	
Selected Gear	Neutral	Drive

TYPICAL CSER COMPONENT MONITOR MALFUNCTION THRESHOLDS
Engine speed discrepancy > 200 rpm
Spark timing discrepancy > 10 deg.

Cold Start Variable Cam Timing Monitor (2008 MY and beyond)

If the VCT cam phasing is used during a cold start to improved catalyst heating, the VCT system is checked functionally by monitoring the closed loop cam position error correction. If the proper cam position cannot be maintained and the system has an advance or retard error greater than the malfunction threshold, a cold start emission reduction (CSER) VCT control malfunction is indicated (P052A/P052B (Bank 1), P052C/P052D (Bank2). This test is the same test that was used previously for monitoring the VCT system under Comprehensive Component Monitoring requirements.

CSER VCT Target Error Check Operation:]	
DTCs	P052A – Cold start camshaft position timing over-advanced (Bank 1) P052B – Cold start camshaft timing over-retarded (Bank 1)
Monitor execution	Continuous
Monitor Sequence	None
Sensors OK	
Monitoring Duration	2 seconds

Typical CSER VCT target error entry conditions:		
Entry condition	Minimum	Maximum
VCT control enabled and commanded to advance or retard cam during CSER	n/a	n/a
Time since start of CSER cam phase monitoring		60 seconds

Typical CSER VCT target error malfunction thresholds:
CSER Response/target error - VCT over-advance: 11 degrees
CSER Response/target error - VCT over-retard: 11 degrees
CSER Response/Stuck Pin – 10 degrees phasing commanded, and not seeing at least 2 degrees of movement.

ED_002078G_00001322-00385

Cold Start Emission Reduction System Monitor

The Cold Start Emission Reduction System Monitor is being introduced for the 2007 MY on vehicles that meet the LEV-II emission standards. The System Monitor detects the lack of catalyst warm up resulting from a failure to apply sufficient CSER during a cold start. It does this by using the inferred catalyst temperature model to determine how closely the actual catalyst temperature follows the expected catalyst temperature during a cold start. How closely the actual temperature follows the expected temperature is reflected in a ratio which is compared with a calibratable threshold.

Temperatures Used

The actual catalyst temperature is the same inferred catalyst temperature that is used by other portions of the engine control system, including the CSER control system. The inputs to this actual temperature are measured engine speed, measured air mass, and commanded spark.

The expected catalyst temperature is calculated using the same algorithm as the actual catalyst temperature, but the inputs are different. Desired engine speed replaces measured engine speed, desired air mass replaces measured air mass, and desired cold start spark replaces commanded spark. The resulting temperature represents the catalyst temperature that is expected if CSER is functioning properly.

Ratio Calculation

A ratio is calculated to reflect how closely the actual temperature has followed the expected temperature. This ratio is the difference between the two temperatures at a certain time-since-start divided by the increase in expected temperature over the same time period. The ratio, then, provides a measure of how much loss of catalyst heating occurred over that time period.

This ratio correlates to tailpipe emissions. Therefore applying a threshold to it allows illumination of the MIL at the appropriate emissions level. The threshold is a function of ECT at engine start.

General CSER Monitor Operation

During the first 15 seconds of a cold start, the monitor checks the entry conditions, counts time in idle, and observes catalyst temperature.

If the expected change in catalyst temperature is large enough, the monitor calculates the ratio as described above. Otherwise the monitor does not make a call.

The monitor then begins the waiting period, which lasts from the time the ratio is calculated (15 seconds after engine start) until 300 seconds after engine start. This 5-minute wait allows time to diagnose other components and systems that affect the validity of the catalyst temperature model. During this waiting period, there are no constraints on drive cycle and the monitor cannot be disabled without turning off the key.

At the end of the waiting period, if no other faults that could compromise the validity of the catalyst temperature model are found, the monitor compares the ratio to the threshold.

If the ratio exceeds the threshold, the monitor considers the test a fail, and the monitor is complete.

If the ratio falls below the threshold, and all of the component monitor results are below their respective thresholds, the monitor determines whether the idle time was sufficient. If so, it considers the test a pass and the monitor is complete. If idle time was not sufficient, the monitor does not make a pass call and does not complete. This prevents tip-ins from resulting in false passes.

ED_002078G_00001322-00386

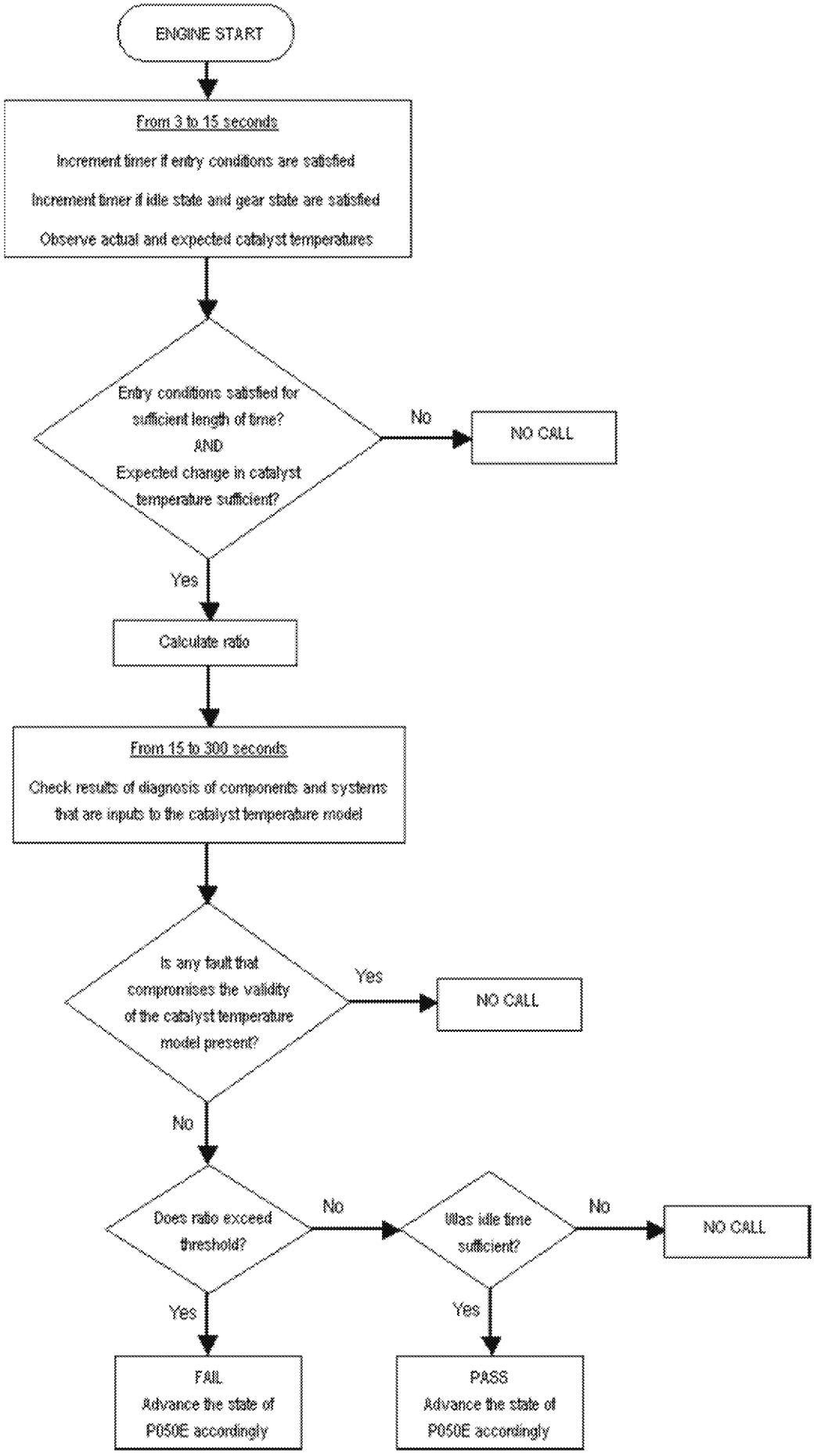
ENGINE START
From 3 to 15 seconds
Increment timer if entry conditions are satisfied
Increment timer if idle state and gear state are satisfied
Observe actual and expected catalyst temperatures
Entry conditions satisfied for sufficient length of time? AND Expected change in catalyst temperature sufficient?
No
NO CALL
Yes
Calculate ratio
From 15 to 300 seconds
Check results of diagnosis of components and systems that are inputs to the catalyst temperature model
Is any fault that compromises the validity of the catalyst temperature model present?
Yes
NO CALL
No
Does ratio exceed threshold?
No
Was idle time sufficient?
No
NO CALL
Yes
Yes
FAIL
Advance the state of P050E accordingly
PASS
Advance the state of P050E accordingly

CSER SYSTEM MONITOR OPERATION	
DTC	P050E: Cold Start Engine Exhaust Temperature Too Low
Monitor Execution	Once per driving cycle, during a cold start
Monitor Sequence	Monitor data collection takes place during first 15 seconds of cold start
Sensors OK	No fault is present in any of the sensors or systems affecting the catalyst temperature model: Mass Air Flow (P0102, P0103), Throttle Position (P0122, P0123, P0222, P0223), Misfire (P0316, P0300-P0312), Injectors (P0201-P0212), Fuel System (P0171, P0172, P0174, P0175), Secondary Air (P0412, P2258), Crank Position Sensor (P0320), Ignition Coil (P0351-P0360), Intake Air Temp (P0112, P0113), Engine Coolant Temp/Cylinder Head Temp (P0117, P0118, P1289, P1290), Variable Cam Timing (P0010, P0020, P0011, P0012, P0021, P0022), Intake Manifold Runner Control (P2008).
Monitoring Duration	Monitor completes 300 seconds after initial engine start

TYPICAL CSER SYSTEM MONITOR ENTRY AND COMPLETION CONDITIONS		
Entry condition	Minimum	Maximum
Barometric Pressure	22 in. Hg	
Engine Coolant Temperature at Start	35 °F	100 °F
Catalyst Temperature at Start	35 °F	125 °F
Fuel Level	15%	
No Torque Reduction by Injector Cutout		
Power Takeout Not Active		
Completion condition	Minimum	Maximum
Length of Time Entry Conditions are Satisfied	11 sec.	
Expected Change in Catalyst Temperature	50 °F	
Time in Idle	10 sec.	
Selected Gear	Neutral	Drive

TYPICAL CSER SYSTEM MALFUNCTION THRESHOLD
Cold start warm-up temperature ratio > 0.2

ED_002078G_00001322-00388

Variable Cam Timing System Monitor

Variable Cam Timing (VCT) enables rotation of the camshaft(s) relative to the crankshaft (phase-shifting) as a function of engine operating conditions. There are four possible types of VCT with DOHC engines:

- Intake Only (phase-shifting only the intake cam);
- Exhaust Only (phase-shifting only the exhaust cam);
- Dual Equal (phase-shifting the intake and exhaust cams equally);
- Dual Independent (phase-shifting the intake and exhaust cams independently).

All four types of VCT are used primarily to increase internal residual dilution at part throttle to reduce NOx, and to improve fuel economy. This allows for elimination the external EGR system.

With Exhaust Only VCT, the exhaust camshaft is retarded at part throttle to delay exhaust valve closing for increased residual dilution and to delay exhaust valve opening for increased expansion work.

With Intake Only VCT, the intake camshaft is advanced at part throttle and WOT (at low to mid-range engine speeds) to open the intake valve earlier for increased residual dilution and close the intake valve earlier in the compression stroke for increased power. When the engine is cold, opening the intake valve earlier warms the charge which improves fuel vaporization for less HC emissions; when the engine is warm, the residual burned gasses limit peak combustion temperature to reduce NOx formation.

With Dual Equal VCT, both intake and exhaust camshafts are retarded from the default, fully advanced position to increase EGR residual and improve fuel economy by reducing intake vacuum pumping losses. The residual charge for NOx control is obtained by backflow through the late-closing exhaust valve as the piston begins its intake stroke.

The VCT system hardware consists of a control solenoid and a pulse ring on the camshaft. The PCM calculates relative cam position using the CMP input to process variable reluctance sensor pulses coming from the pulse ring mounted on the camshaft. Each pulse wheel has N + 1 teeth where N = the number of cylinders per bank. The N equally spaced teeth are used for cam phasing; the remaining tooth is used to determine cylinder # 1 position. Relative cam position is calculated by measuring the time between the rising edge of profile ignition pickup (PIP) and the falling edges of the VCT pulses.

The PCM continually calculates a cam position error value based on the difference between the desired and actual position and uses this information to calculate a commanded duty cycle for the VCT solenoid valve. When energized, engine oil is allowed to flow to the VCT unit thereby advancing and retarding cam timing. The variable cam timing unit assembly is coupled to the camshaft through a helical spline in the VCT unit chamber. When the flow of oil is shifted from one side of the chamber to the other, the differential change in oil pressure forces the piston to move linearly along the axis of the camshaft. This linear motion is translated into rotational camshaft motion through the helical spline coupling. A spring installed in the chamber is designed to hold the camshaft in the low-overlap position when oil pressure is too low (~15 psi) to maintain adequate position control. The camshaft is allowed to rotate up to 30 degrees.

Although the VCT system has been monitored under Comprehensive Component Monitoring requirements for many years, a new, emission-based VCT monitor is being introduced for the 2006 MY on vehicles that meet LEV-II emission standards. The intent of the new VCT monitoring requirements is to detect slow VCT system response that could cause emissions to increase greater than 1.5 * std. in addition to detecting functional problems (target errors).

The new logic calculates the instantaneous variance in actual cam position (the squared difference between actual cam position and commanded cam position), then calculates the long term variance using a rolling average filter (Exponentially Weighted Moving Average). Continued, slow response from the VCT system will eventually accumulate large variances.

ED_002078G_00001322-00389

This same logic will also detect target errors that were detected by the previous CCM monitor. If the VCT system is stuck in one place, the monitor will detect a variance which will quickly accumulate.

There are three variance indices that monitor cam variance in the retard direction, the advance direction, and for V-engines, the difference between banks. If any variance index is greater than the malfunction threshold, a VCT slow response/target error malfunction will be indicated (P0011, P0012 Bank 1, 0021, P0022 Bank 2). Target errors will tend to generate only a single over-advanced or over-retarded code while slow response will tend to generate both codes.

In addition, logic has been added to determine whether the camshaft and crankshaft are misaligned by one or more teeth. This test calculates the absolute offset between one of the camshaft teeth and the crankshaft missing tooth at idle when that can is at its stop. If the error is greater than the malfunction threshold, a cam/crank misalignment error will be indicated (P0016 Bank 1, P0018 Bank 2).

For systems that phase the cams immediately off of a cold start for reducing emissions or CSER (Cold Start Emissions Reduction) the cam position is monitored for functionality during this period of time. There are two ways to set failures.

- Error between the actual position and the expected position is calculated. If the error is greater than a specified amount, and the Error persists for a period of time, a P052x code is set designating over advanced or retarded and the bank number. The diagnostic is only executed during CSER phasing.

- The diagnostic also checks for a cam position request above a threshold for a period of time, and determines that the VCT actuator pin is stuck if the cam does not move from the locked position by a certain amount. This is also only done during CSER operation. If the locking pin is determined to be stuck then the Oil Control Solenoid (OCS) is cycled on and off for a calibratable amount to allow pressure to build in the system to unseat the locking pin. If attempts to unstick the locking pin fail, then a P052x code is set.

The in-use performance ratio numerator for the VCT monitor can be incremented only if the VCT system has been monitored for both functional and response faults. If the vehicle is operated in a manner that does not ask the VCT actuators to change position, it may not be possible to evaluate whether they are working properly. As a result, the in-use ratio numerator checks to see if the commanded VCT position changes sufficiently to detect possible target errors and with a sufficiently high rate to detect possible slow response. For each drive cycle in which both criteria are met, the VCT in-use performance numerator will be incremented.

Similar to the previous CCM monitor, the VCT solenoid output driver in the PCM is checked electrically for opens and shorts (P0010 Bank 1, P0020 Bank 2).

ED_002078G_00001322-00390

VCT Monitor Operation:	
DTCs	P0010 - Camshaft Position Actuator Circuit (Bank 1) P0011 - Cam Position Actuator Over Advanced (Bank 1) P0012 - Cam Position Actuator Over Retarded (Bank 1) P0016 - Crank/Cam Position Correlation (Bank 1)
Monitor execution	Continuous
Monitor Sequence	None
Sensors OK	IAT, ECT, EOT, IMRC, TP, MAF, CKP, and CMP
Monitoring Duration	5 - 10 seconds for circuit faults and functional checks, 300 seconds for target error

Typical VCT response/functional monitor entry conditions:		
Entry condition	Minimum	Maximum
Engine RPM (for P0016/P0018 only)	850	4500
Engine Coolant Temperature	18 °F	
Engine Oil Temperature		280 °F
VCT control enabled and commanded to advance or retard cam **	n/a	n/a
** VCT control of advance and retard by the engine is disabled in crank mode, when engine oil is cold (< 150 °F), while learning the cam/crank offset, while the control system is "cleaning" the solenoid oil passages, throttle actuator control in failure mode, and if one of the following sensor failures occur: IAT, ECT, EOT, MAF, TP, CKP, CMP, or IMRC.		

ED_002078G_00001322-00391

Typical VCT monitor malfunction thresholds:
VCT solenoid circuit: Open/short fault set by the PCM driver
Cam/crank misalignment: > or = 7.5 crank degrees
Response/target error - VCT over-advance variance too high: 100 degrees squared
Response/target error - VCT over-retard variance too high: 400 degrees squared

Typical In-Use Performance monitoring thresholds:
Monitoring thresholds to increment the numerator:
Amount of cam change required for target error fault: > 160 degrees squared
Amount of rate of change required for slow response fault: > 5 degrees squared

J1979 VCT Monitor Mode $06 Data			
Monitor ID	Test ID	Description for CAN	Units
$35	$80	Camshaft Advanced Position Error Bank 1	Unsigned, Angular degrees
$35	$81	Camshaft Retarded Position Error Bank 1	Unsigned, Angular degrees

ED_002078G_00001322-00392

Electronic Throttle Control

The Electronic Throttle Control (ETC) system uses a strategy that delivers engine or torque, based on driver demand, utilizing an electronically controlled throttle body. ETC strategy was developed mainly to improve fuel economy. This is possible by decoupling throttle angle (produces engine torque) from pedal position (driver demand). This allows the powertrain control strategy to optimize fuel control and transmission shift schedules while delivering the requested engine or wheel torque.

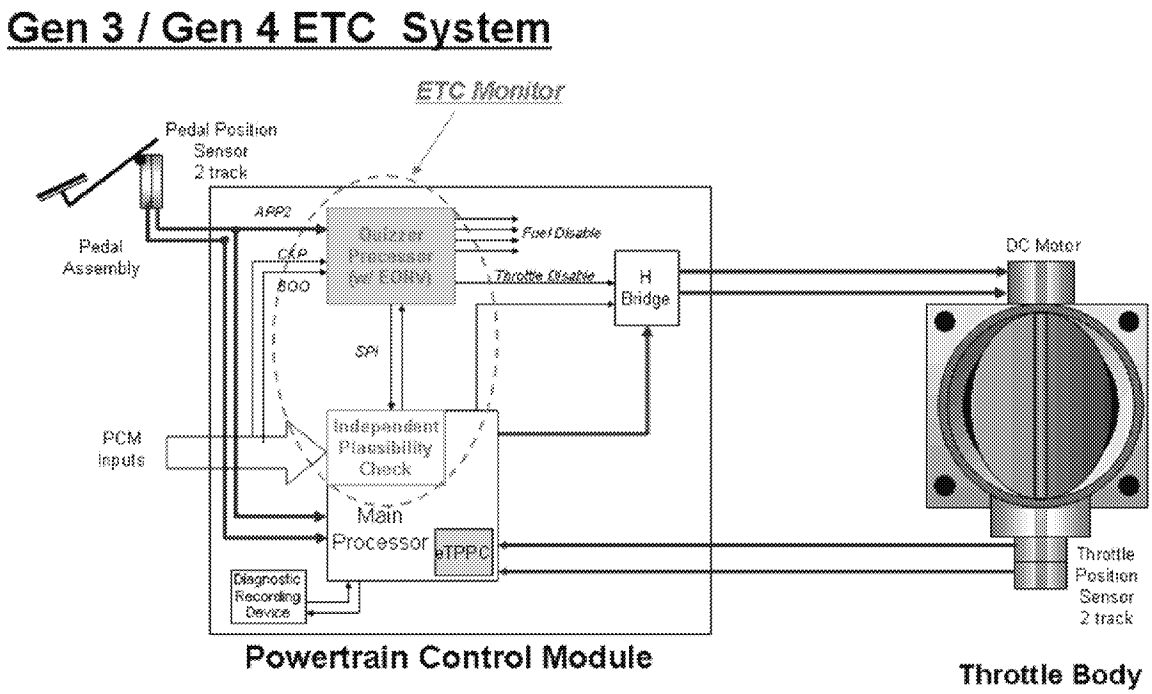

Because safety is a major concern with ETC systems, a complex safety monitor strategy (hardware and software) was developed. The monitor system is distributed across two processors: the main powertrain control processor and a monitoring processor called a Quizzer processor.

The primary monitoring function is performed by the Independent Plausibility Check (IPC) software, which resides on the main processor. It is responsible for determining the driver-demanded torque and comparing it to an estimate of the actual torque delivered. If the generated torque exceeds driver demand by specified amount, the IPC takes appropriate mitigating action.

Since the IPC and main controls share the same processor, they are subject to a number of potential, common-failure modes. Therefore, the Quizzer processor was added to redundantly monitor selected PCM inputs and to act as an intelligent watchdog and monitor the performance of the IPC and the main processor. If it determines that the IPC function is impaired in any way, it takes appropriate Failure Mode and Effects Management (FMEM) actions.

ED_002078G_00001322-00393

ETC System Failure Mode and Effects Management:	
Effect	Failure Mode
No Effect on Drivability	A loss of redundancy or loss of a non-critical input could result in a concern that does not affect driveability. The powertrain malfunction indicator (wrench) and the malfunction indicator lamp (MIL) do not illuminate, however the speed control may be disabled. A DTC is set to indicate the component or circuit with the concern.
Delayed APP Sensor Response with Brake Override	This mode is caused by the loss of one APP sensor input due to sensor, wiring, or PCM concerns. The system is unable to verify the APP sensor input and driver demand. The throttle plate response to the APP sensor input is delayed as the accelerator pedal is applied. The engine returns to idle RPM whenever the brake pedal is applied. The powertrain malfunction indicator (wrench) illuminates, but the MIL does not illuminate in this mode. An APP sensor related DTC is set.
LOS Supercreep	Loss of both APP sensor inputs due to sensor, wiring, or PCM concerns, or internal control mode torque performance, or generator speed or crankshaft position (CKP) sensor or harness. There is no response when the accelerator pedal is applied. The engine returns to idle RPM and driver demanded torque returns to zero whenever the brake pedal is applied. The powertrain malfunction indicator (wrench) illuminates, but the MIL does not illuminate in this mode. An internal control module torque performance or internal control module drive motor/generator/engine speed sensor or APP sensor DTC is set
LOS Supercreep	Creep mode is caused by the loss of one brake pedal position (BPP) and one APP sensor input. The system is unable to determine driver demand. There is no response when the accelerator pedal is applied. The powertrain malfunction indicator (wrench) illuminates, but the MIL does not illuminate in this mode. An APP and BPP sensor, or harness related DTC is set.
RPM Guard with Pedal Follower	In this mode, the throttle plate control is disabled due to the loss of both TP sensor inputs, loss of throttle plate control, stuck throttle plate, significant processor concerns, or other major electronic throttle body concern. The spring returns the throttle plate to the default (limp home) position. A maximum allowed RPM is determined based on the position of the accelerator pedal (RPM Guard). If the actual RPM exceeds this limit, spark and fuel are used to bring the RPM below the limit. The powertrain malfunction indicator (wrench) and the MIL illuminate in this mode and a DTC for an ETC related component is set. EGR and VCT outputs are set to default values and speed control is disabled.
Shutdown	If a significant processor concern is detected, the monitor forces the vehicle to shutdown by disabling engine, generator and traction motor. The powertrain malfunction indicator (wrench), MIL, and hazard indicator may illuminate.

ED_002078G_00001322-00394

Transmission Range Sensor Inputs

Transmission Range Sensor Check Operation:	
DTCs	P2800 – Transmission Range Sensor B Circuit (PRNDL input) (wrench light, non-MIL) P2801 – Transmission Range Sensor B Circuit Range/Performance (wrench light, non-MIL) P2802 – Transmission Range Sensor B Circuit Low (wrench light, non-MIL) P2803 – Transmission Range Sensor B Circuit High (wrench light, non-MIL) P2806 – Transmission Range Sensor Alignment (wrench light, non-MIL)
Monitor execution	continuous
Monitor Sequence	None
Sensors OK	not applicable
Monitoring Duration	< 1 seconds to register a malfunction

Transmission range sensor check malfunction thresholds:					
TR Sensor	Park	Reverse	Neutral	Drive	Low
TR_A1 (VOLTS	3.84 - 4.77	2.58 - 3.31	1.82 - 2.56	0.97 - 1.79	0.20 - 0.92
TR_A2 (VOLTS	0.20 - 1.08	1.56 - 2.25	2.26 - 2.96	2.97 - 3.74	3.77 - 4.45

Range/performance – disagreement between sensors > 3.85 degrees

ED_002078G_00001322-00395

Accelerator and Throttle Position Sensor Inputs

On-demand KOEO / KOER Sensor Check Operation:	
DTCs	P1575 – APP out of self-test range (non-MIL)
Monitor execution	On-demand
Monitor Sequence	None
Sensors OK	not applicable
Monitoring Duration	< 1 seconds to register a malfunction

Accelerator Pedal Position Sensor Check Operation:	
DTCs	P2122, P2123 – APP D circuit continuity (wrench light, non-MIL) P2127, P2128 – APP E circuit continuity (wrench light, non-MIL) P2138 – APP D/E circuit disagreement (wrench light, non-MIL)
Monitor execution	continuous
Monitor Sequence	none
Sensors OK	not applicable
Monitoring Duration	< 1 seconds to register a malfunction

APP sensor check malfunction thresholds:
Circuit continuity - Voltage < 0.25 volts or voltage > 4.75 volts Range/performance – disagreement between sensors > 1.1 degrees

Brake Switch Check Operation:	
DTCs	P0504 – Brake switch A/B correlation (wrench light, non-MIL) P0572 – Brake switch circuit low (wrench light, non-MIL) P0573 – Brake switch circuit high (wrench light, non-MIL)
Monitor execution	Continuous
Monitor Sequence	None
Sensors OK	not applicable
Monitoring Duration	> 25 brake application cycles to register a malfunction

ED_002078G_00001322-00396

Throttle Position Sensor Check Operation:	
DTCs	P0122, P0123 – TP A circuit continuity (MIL, wrench light) P0222, P0223 – TP B circuit continuity (MIL, wrench light) P2135 – TP A / TP B correlation (non-MIL, wrench light)
Monitor execution	Continuous
Monitor Sequence	None
Sensors OK	not applicable
Monitoring Duration	< 1 seconds to register a malfunction

TP sensor check malfunction thresholds:
Circuit continuity - Voltage < 0.25 volts or voltage > 4.75 volts Correlation and range/performance – disagreement between sensors > 7 degrees

ED_002078G_00001322-00397

Electronic Throttle Monitor

Electronic Throttle Monitor Operation:	
DTCs	U0300 – ETC software version mismatch, IPC or Quizzer (MIL, Hazard, wrench light for Gen3 / Gen4) P0600 – Serial Communication Link (MIL, Hazard, wrench light for Gen3 / Gen4) P060A – Internal control module monitoring processor performance (MIL, Hazard, wrench light for Gen3 / Gen4) P060B – Internal control module A/D processing performance (MIL, Hazard, wrench light) P060C – Internal control module main processor performance (MIL, Hazard, wrench light) P060D – Internal control module accelerator pedal performance (non-MIL) [Gen3 / Gen4 only] P061A – Internal control module Torque Performance (MIL, wrench light) P0A18 – Motor Torque Sensor Circuit Range/Performance (MIL, Hazard, wrench light) P0A23 – Generator Torque Sensor Circuit Range/Performance (MIL, Hazard, wrench light) P0C2F – Internal Control Module Drive Motor/Generator/Engine Speed Performance (MIL, wrench light) P1A0D – Hybrid Powertrain Control Module – Generator Disabled (MIL, Hazard, wrench light) P1A0E - Hybrid Powertrain Control Module – Motor Disabled (MIL, Hazard, wrench light) P061F – Internal control module throttle actuator controller performance (non-MIL, wrench light for Gen3 / Gen4) P1674 – Internal control module software corrupted (MIL, hazard, wrench light for Gen3 / Gen4)
Monitor execution	Continuous
Monitor Sequence	None
Sensors OK	not applicable
Monitoring Duration	< 1 seconds to register a malfunction

ED_002078G_00001322-00398

Throttle Plate Position Controller (TPPC) Outputs

The purpose of the TPPC is to control the throttle position to the desired throttle angle. The current ETC systems have the eTPPC function integrated in the main PCM processor.

The desired angle is relative to the hard-stop angle. The hard-stop angle is learned during each key-up process before the main CPU requests the throttle plate to be closed against the hard-stop. The output of the (e)TPPC is a voltage request to the H-driver (also in PCM). The H driver is capable of positive or negative voltage to the Electronic Throttle Body Motor.

Throttle Plate Controller and Actuator Operation:	
DTCs	P2107 – processor test (MIL, wrench light) P2111 – throttle actuator system stuck open (MIL, wrench light) P2112 – throttle actuator system stuck closed (MIL, wrench light) P2101 – throttle actuator range/performance test (MIL, wrench light) P115E – throttle actuator airflow trim at max limit (MIL)
Monitor execution	Continuous
Monitor Sequence	None
Monitoring Duration	< 5 seconds to register a malfunction

ED_002078G_00001322-00399

Engine Temperature Sensor Inputs

Analog inputs such as Intake Air Temperature (P0112, P0113), Cylinder Head Temperature (P1289. P1290), Mass Air Flow (P0102, P0103) and Throttle Position (P0122, P0123) are checked for opens, shorts, or rationality by monitoring the analog -to-digital (A/D) input voltage.

The ECT rationality test checks to make sure that ECT is not stuck high in a range that causes other OBD to be disabled. If after a long (6 hour) soak, ECT is very high (> 230 °F) and is also much higher than IAT at start, it is assumed that ECT is stuck high. If after a long (6 hour) soak, ECT is stuck midrange between 175 °F (typical thermostat monitor threshold temperature) and 230 °F and is also much higher than IAT at start, it is assumed that ECT is stuck mid-range.

ECT Sensor Rationality Check Operation:	
DTCs	P0116 (ECT stuck high or midrange)
Monitor execution	Once per driving cycle
Monitor Sequence	None
Sensors OK	ECT, CHT, IAT
Monitoring Duration	100 seconds to register a malfunction

Typical ECT Sensor Rationality check entry conditions:		
Entry Condition	Minimum	Maximum
Engine-off time (soak time)	360 min	
Difference between ECT and IAT		50 deg
Engine Coolant Temperature	230 °F	
Engine Coolant Temperature for stuck midrange condition	160 °F	230 °F

Typical ECT Sensor Rationality check malfunction thresholds:
Catalyst, Misfire, Fuel System or HO2S Monitors have not run this drive cycle

ED_002078G_00001322-00400

The CHT sensor measures cylinder head metal temperature as opposed to engine coolant temperature. At lower temperatures, CHT temperature is equivalent to ECT temperature. At higher temperatures, ECT reaches a maximum temperature (dictated by coolant composition and pressure) whereas CHT continues to indicate cylinder head metal temperature. If there is a loss of coolant or air in the cooling system, the CHT sensor will still provides an accurate measure of cylinder head metal temperature. If a vehicle uses a CHT sensor, the PCM software calculates both CHT and ECT values for use by the PCM control and OBD systems.

Cylinder Head Temperature Sensor Check Operation:	
DTCs	P1289 (high input), P1290 (low input), P1299 (fail-safe cooling activated)
Monitor execution	continuous
Monitor Sequence	none
Sensors OK	not applicable
Monitoring Duration	5 seconds to register a malfunction

Typical CHT sensor check malfunction thresholds:
Voltage < 0.41 volts or voltage > 4.95 volts For P1299, MIL illuminates immediately if CHT > 270 ^{o} Fuel shut-off is activated to reduce engine and coolant temperature

Intake Air Temperature Sensor Check Operation:	
DTCs	P0112 (low input), P0113 (high input)
Monitor execution	continuous
Monitor Sequence	none
Sensors OK	not applicable
Monitoring Duration	5 seconds to register a malfunction

Typical IAT sensor check malfunction thresholds:
Voltage < 0.20 volts or voltage > 4.93 volts

ECT, IAT, EOT Temperature Sensor Transfer Function		
Volts	A/D counts in PCM	Temperature, degrees F
4.89	1001	-40
4.86	994	-31
4.81	983	-22
4.74	970	-13
4.66	954	-4
4.56	934	5
4.45	910	14
4.30	880	23
4.14	846	32
3.95	807	41
3.73	764	50
3.50	717	59
3.26	666	68
3.00	614	77
2.74	561	86
2.48	508	95
2.23	456	104
1.99	407	113
1.77	361	122
1.56	319	131
1.37	280	140
1.20	246	149
1.05	215	158
0.92	188	167
0.80	165	176
0.70	144	185
0.61	126	194
0.54	110	203
0.47	96	212
0.41	85	221
0.36	74	230
0.32	65	239
0.28	57	248
0.25	51	257
0.22	45	266
0.19	40	275
0.17	35	284
0.15	31	293
0.14	28	302

ED_002078G_00001322-00402

IAT Rationality Test

The IAT rationality test determines if the IAT sensor is producing an erroneous temperature indication within the normal range of IAT sensor input.

The IAT sensor rationality test is run only once per power-up. The IAT sensor input is compared to the CHT sensor input (ECT sensor input on some applications) at key-on after a long (6 hour) soak. If the IAT sensor input and the CHT (ECT) sensor input agree within a tolerance (+/- 30 deg F), no malfunction is indicated and the test is complete. If the IAT sensor input and the CHT (ECT) sensor input differ by more than the tolerance, the vehicle must be driven over maximum electric vehicle speed for 5 minutes to confirm the fault. This is intended to address noise factors like sun load that can cause the IAT sensor to indicate a much higher temperature than the CHT (ECT) sensor after a long soak. Driving the vehicle attempts to bring the IAT sensor reading within the test tolerance. If the IAT sensor input remains outside of the tolerance after the vehicle drive conditions have been met, the test indicates a malfunction and the test is complete.

In addition to the start-up rationality check, an IAT "Out of Range" check is also performed. The test continuously, checks to see if IAT is greater than the “IAT Out of Range High threshold”, approximately 150 deg F. In order to prevent setting false DTC during extreme ambient or vehicle soak conditions, the same count up/count down timer used for the IAT startup rationality test is used to validate the fault. If IAT is greater than 150 deg F and vehicle speed is greater than ~ 40 mph for 250 seconds then set a P0111.

Either the IAT startup rationality test or the IAT Out of Range High test can set a P0111 DTC. The logic is designed so that either fault can trigger a P0111, however, both faults must be OK before the P0111 DTC is cleared.

Block heater detection results in a no-call.

Intake Air Temperature Sensor Range/Performance Check Operation:	
DTCs	P0111 (range/performance)
Monitor execution	Once per driving cycle, at start-up
Monitor Sequence	None
Sensors OK	ECT/CHT, IAT, VSS
Monitoring Duration	Immediate or up to 30 minutes to register a malfunction

Typical Intake Air Temperature Sensor Range/Performance Entry Conditions		
Entry condition	Minimum	Maximum
Air Mass	1.2 lbm/min	
Engine off (soak) time	6 hours	
Battery Voltage	11.0 Volts	
Time since engine start (if driving req'd)		30 min
Vehicle speed (if driving req'd)	35 mph	
Time above minimum vehicle speed (if driving req'd)	5 min	
IAT - ECT at start (block heater inferred)	-30 °F	-90 °F

Typical IAT sensor check malfunction thresholds:
IAT and ECT/CHT error at start-up > +/-30 deg F

ED_002078G_00001322-00403

Intake Air Temperature Sensor Out of Range High Check Operation:	
DTCs	P0111 (Out of Range High)
Monitor execution	Continuous
Monitor Sequence	None
Sensors OK	ECT/CHT, IAT, VSS
Monitoring Duration	250 seconds to register a malfunction

Typical Intake Air Temperature Sensor Out of Range high Entry Conditions		
Entry condition	Minimum	Maximum
Engine off (soak) time	6 hours	
Battery Voltage	11.0 Volts	
Vehicle speed	35 mph	
Time above minimum vehicle speed (if driving req'd)	5 min	

Typical IAT Sensor Out of Range High check malfunction thresholds:
IAT > 150 deg F

ED_002078G_00001322-00404

Throttle Position Sensor

Throttle Position Sensor Check Operation:	
DTCs	P0122 (low input), P0123 (high input)
Monitor execution	continuous
Monitor Sequence	none
Sensors OK	not applicable
Monitoring Duration	5 seconds to register a malfunction

Typical TP sensor check malfunction thresholds:
Voltage < 0.20 volts or voltage > 4.80 volts

Mass Air Flow Sensor

MAF Sensor Check Operation:	
DTCs	P0102 (low input), P0103 (high input)
Monitor execution	continuous
Monitor Sequence	none
Sensors OK	not applicable
Monitoring Duration	5 seconds to register a malfunction

Typical MAF sensor check malfunction thresholds:
Voltage < 0.244 volts and engine running or voltage > 4.785 volts engine rpm < 4,000 rpm

MAF/TP Rationality Test

The MAF and TP sensors are cross-checked to determine whether the sensor readings are rational and appropriate for the current operating conditions. (P1A0C)

MAF/TP Rationality Check Operation:	
DTCs	P1A0C
Monitor execution	Continuous
Monitor Sequence	None
Sensors OK	
Monitoring Duration	5 seconds within test entry conditions

Typical MAF/TP rationality check entry conditions:		
Entry Condition	Minimum	Maximum
Engine RPM	1025 rpm	minimum of 3800 rpm
Engine Coolant Temp	40 °F	

Typical MAF/TP rationality check malfunction thresholds:
Load > 55% and TP < 0.288 volts or Load < 20% and TP > 1.953 volts

ED_002078G_00001322-00406

5 Volt Sensor Reference Voltage Check:	
DTCs	P0642 (low input), P0643 (high input)
Monitor execution	continuous
Monitor Sequence	None
Sensors OK	not applicable
Monitoring Duration	5 seconds to register a malfunction

Typical sensor check malfunction thresholds:
Voltage < 4.5 volts or voltage > 5.5 volts

Miscellaneous CPU Tests

Loss of Keep Alive Memory (KAM) power (a separate wire feeding the PCM) results is a P1633 DTC and immediate MIL illumination on most applications.

Vehicles that require tire/axle information and VIN to be programmed into the PCM Vehicle ID block (VID) will store a P1639 if the VID block is not programmed or corrupted.

Additional DTCs will be stored to indicate various internal PCM hardware malfunctions:

P0602 - Powertrain Control Module Programming Error indicates that the Vehicle ID block check sum test failed.

P0603 - Powertrain Control Module Keep Alive Memory (KAM) Error indicates the Keep Alive Memory check sum test failed.

P0604 - Powertrain Control Module Random Access Memory (RAM) Error indicates the Random Access Memory read/write test failed.

P0605 - Powertrain Control Module Read Only Memory (ROM) Error indicates a Read Only Memory check sum test failed.

P0607 - Powertrain Control Module Performance indicates incorrect CPU instruction set operation, or excessive CPU resets.

P068A - ECM/PCM Power Relay De-energized - Too Early. This fault indicates that NVRAM write did not complete successfully after the ignition key was turned off, prior to PCM shutdown.

P06B8 - Internal Control Module Non-Volatile Random Access Memory (NVRAM) Error indicates Permanent DTC check sum test failed

The PCM "engine off" or "soak" timer is tested to ensure that it is functional. The value of engine coolant temperature decays after the engine is turned off. This decay is modeled as a function of ECT, IAT and soak time. If, during a cold start, (difference between ECT and IAT is low), the actual ECT at start is much lower than the predicted ECT at start, it means that the soak timer is not functioning and a P2610 DTC is stored. (If the timer fails, it will read zero seconds and the model will predict that ECT will be the same temperature as when the engine was last turned off.)

U0101 – Lost Communication With TCM

ED_002078G_00001322-00407

5 Volt Sensor Reference Voltage A Check:	
DTCs	P0642 (low input) P0643 (high input)
Monitor execution	Continuous
Monitor Sequence	None
Sensors OK	not applicable
Monitoring Duration	5 sec to register a malfunction

Typical 5 Volt Sensor Reference Voltage A & B check entry conditions:		
Entry Condition	Minimum	Maximum
Ignition "ON"	NA	NA

Typical 5 Volt Sensor Reference Voltage A & B check malfunction thresholds:
P0642 Short to ground (signal voltage): < 4.75 V P0643 Short to battery plus (signal voltage): > 5.25 V

Ignition

New floating point processors no longer use an EDIS chip for ignition signal processing. The crank and cam position signals are now directly processed by the PCM/ECM microprocessor using a special interface chip called a Time Processing Unit or TPU. The 36-tooth crankshaft and camshaft position signals come directly into the TPU. The signals to fire the ignition coil drivers also come from the TPU.

The ignition system is checked by monitoring three ignition signals during normal vehicle operation:

> CKP, the signal from the crankshaft 60-2-tooth wheel. The missing teeth are used to locate the cylinder pair associated with cylinder # 1 The TPU also generates the Profile Ignition Pickup (PIP) signal, a 50% duty cycle, square wave signal that has a rising edge at 10 deg BTDC.
>
> Camshaft Position (CMP), a signal derived from the camshaft to identify the #1 cylinder

First, several relationships are checked on the 60-2 tooth CKP signal. The TPU looks for the proper number of teeth (58) after the missing teeth are recognized; time between teeth too low (< 30 rpm or > 9,000 rpm); or the missing teeth were not where it was expected to be. If an error occurs, the TPU shuts off fuel and the ignition coils and attempts to resynchronize itself. It takes on revolution to verify the missing tooth, and another revolution to verify cylinder #1 using the CMP input. Note that if a P0320 DTC is set on a vehicle with Electronic Throttle Control, (ETC), the ETC software will also set a P2106.

If the proper ratio of CMP events to PIP events is not being maintained (for example, 1 CMP edge for every 8 PIP edges for an 8-cylinder engine), it indicates a missing or noisy CMP signal (P0340). On applications with Variable Cam Timing (VCT), the CMP wheel has five teeth to provide the VCT system with more accurate camshaft control. The TPU checks the CMP signal for an intermittent signal. If an intermittent is detected, the VCT system is disabled and a P0344 (CMP Intermittent Bank 1) or P0349 (CMP intermittent Bank 2) is set.

ED_002078G_00001322-00409

CKP Ignition System Check Operation:	
DTCs	P0320 - Ignition Engine Speed Input Circuit
Monitor execution	continuous
Monitor Sequence	none
Sensors OK	
Monitoring Duration	< 5 seconds

Typical CKP ignition check entry conditions:		
Entry Condition	Minimum	Maximum
Engine RPM for CKP	200 rpm	

Typical CKP ignition check malfunction thresholds:
Incorrect number of teeth after the missing tooth is recognized, Time between teeth too low (< 30 rpm or > 9,000 rpm) Missing tooth was not where it was expected to be.

CMP Ignition System Check Operation:	
DTCs	P0340 - Intake Cam Position Circuit, Bank 1
Monitor execution	continuous
Monitor Sequence	none
Sensors OK	
Monitoring Duration	< 5 seconds

Typical CMP ignition check entry conditions:		
Entry Condition	Minimum	Maximum
Engine RPM for CMP	200 rpm	

Typical CMP ignition check malfunction thresholds:
Ratio of PIP events to CMP events: 4:1, 6:1, 8:1 or 10:1 based on engine cyl

Coil Primary Ignition System Check Operation:	
DTCs	P0351 – P0354 (Coil primary)
Monitor execution	Continuous
Monitor Sequence	None
Sensors OK	
Monitoring Duration	< 5 seconds

Typical Coil primary ignition check entry conditions:		
Entry Condition	Minimum	Maximum
Engine RPM for coil primary	200 rpm	Minimum of 3200 rpm
Positive engine torque	Positive torque	
Battery Voltage	11 volts	16 volts

Typical Coil primary ignition check malfunction thresholds:
Ratio of PIP events to IDM or NOMI events 1:1

Engine Outputs

The PCM will monitor the "smart" driver fault status bit that indicates either an open circuit, short to power or short to ground.

Injector Check Operation:	
DTCs	P0201 through P0204 (opens/shorts)
Monitor execution	Continuous within entry conditions
Monitor Sequence	None
Monitoring Duration	10 seconds

Typical injector circuit check entry conditions:		
Entry Condition	Minimum	Maximum
Battery Voltage	11.0 volts	
Engine Coolant Temp		240 °F
Intake Air Temp		150 °F

The Idle Air Control is functionally checked by monitoring the closed loop idle speed correction required to maintain the desired idle rpm. If the proper idle rpm cannot be maintained and the system has a high rpm (+100) or low rpm error (-200) greater than the malfunction threshold, an IAC malfunction is indicated. (P0507, P0506)

IAC Check Operation:	
DTCs	P0507 (functional - overspeed) P0506 (functional - underspeed)
Monitor execution	once per driving cycle
Monitor Sequence	None
Sensors OK	
Monitoring Duration	15 seconds

Typical IAC functional check entry conditions:		
Entry Condition	Minimum	Maximum
Engine Coolant Temp	130 °F	
Time since engine start-up	100 seconds	
Closed loop fuel	Yes	
Throttle Position (at idle, closed throttle, no dashpot)	Closed	Closed

Typical IAC functional check malfunction thresholds:
For underspeed error: Actual rpm 100 rpm below target, closed-loop IAC correction > 1 lb/min
For overspeed error: Actual rpm 200 rpm above target, closed-loop IAC correction < .2 lb/min

ED_002078G_00001322-00412

Mechanical Returnless Fuel System (MRFS) — Dual Speed

The FP signal is a duty cycle command sent from the PCM to the fuel pump control module. The fuel pump control module uses the FP command to operate the fuel pump at the speed requested by the PCM or to turn the fuel pump off. A valid duty cycle to command the fuel pump on, is in the range of 15-47%. The fuel pump control module doubles the received duty cycle and provides this voltage to the fuel pump as a percent of the battery voltage. When the ignition is turned on, the fuel pump runs for about 1 second and is requested off by the PCM if engine rotation is not detected.

FUEL PUMP DUTY CYCLE OUTPUT FROM PCM

FP Duty Cycle Command	PCM Status	Fuel Pump Control Module Actions
0-15%	Invalid off duty cycle	The fuel pump control module sends a 20% duty cycle signal on the fuel pump monitor (FPM) circuit. The fuel pump is off.
37%	Normal low speed operation.	The fuel pump control module operates the fuel pump at the speed requested. The fuel pump control module sends a 60% duty cycle signal on FPM circuit.
47%	Normal high speed operation.	The fuel pump control module operates the fuel pump at the speed requested. The fuel pump control module sends a 60% duty cycle signal on FPM circuit.
51-67%	Invalid on duty cycle.	The fuel pump control module sends a 20% duty cycle signal on the FPM circuit. The fuel pump is off.
67-83%	Valid off duty cycle	The fuel pump control module sends a 60% duty cycle signal on FPM circuit. The fuel pump is off.
83-100%	Invalid on duty cycle.	The fuel pump control module sends a 20% duty cycle signal on the FPM circuit. The fuel pump is off.

The fuel pump control module communicates diagnostic information to the PCM through the FPM circuit. This information is sent by the fuel pump control module as a duty cycle signal. The 4 duty cycle signals that may be sent are listed in the following table.

FUEL PUMP CONTROL MODULE DUTY CYCLE SIGNALS

Duty Cycle	Comments
20%	This duty cycle indicates the fuel pump control module is receiving an invalid duty cycle from the PCM.
40%	For vehicles with event notification signal, this duty cycle indicates the fuel pump control module is receiving an invalid event notification signal from the RCM. For vehicles without event notification signal, this duty cycle indicates the fuel pump control module is functioning normally.
60%	For vehicles with event notification signal, this duty cycle indicates the fuel pump control module is functioning normally.
80%	This duty cycle indicates the fuel pump control module is detecting a concern with the secondary circuits.

ED_002078G_00001322-00413

MRFS Check Operation:	
DTCs	P025A – Fuel Pump Control Circuit (opens/shorts) P025B – Invalid Fuel Pump Control Data (20% duty cycle from FPM) P0627 – Fuel Pump Secondary Circuit (80% duty cycle from PFM) U2010B – Fuel Pump Disabled Circuit (40% duty cycle from FPM) U0109 – Loss of Communication with Fuel Pump Module
Monitor execution	once per driving cycle
Monitor Sequence	None
Sensors OK	
Monitoring Duration	2 seconds

Typical MRFS check entry conditions:		
Entry Condition	Minimum	Maximum
Battery Voltage	11 volts	

Typical MRFS check malfunction thresholds:
P025A
FP output driver indicates fault
P025B, P0627, U210B
Fuel Pump Monitor duty cycle feedback of 20, 40 or 80%
U0191
No Fuel Pump Monitor duty cycle feedback

ED_002078G_00001322-00414

Low Voltage Battery Charging System - Overview

The 12V battery is charged by the Direct Current/Direct Current (DC/DC) converter control module. It is enabled when the high voltage battery contactors have closed, providing high-voltage power to the DC/DC converter control module.

The Battery Monitoring Sensor continuously monitors the battery state of charge condition and provides the BCM with this information. The BCM communicates this information to the PCM over the High Speed CAN network (HS-CAN). The PCM communicates the battery desired set point to the DC/DC converter control module which supplies the necessary charge voltage to the 12V battery. The Battery Monitoring Sensor also estimates losses in the battery capacity over time. The Battery Monitoring Sensor should only be reset when the battery is replaced.

The Battery Monitoring Sensor is clamped directly to the negative terminal of the battery and grounds to the vehicle at the chassis ground connection point through the negative battery cable and eyelet. It is part of the negative battery cable and cannot be serviced separately.

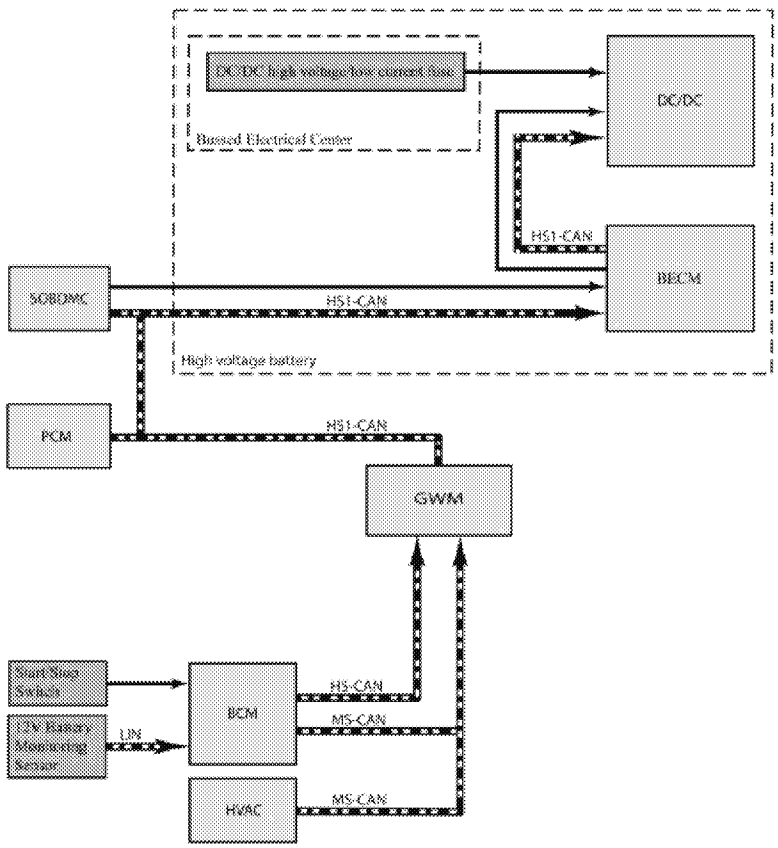

E155478

The PCM monitors the low voltage battery for charging performance.

Low Voltage Battery Check Operation:	
DTCs	P057F - Battery State of Charge Performance.
Monitor execution	During vehicle / engine off while on plug-in charge
Monitor Sequence	None
Sensors OK	
Monitoring Duration	

Low Voltage Battery check malfunction thresholds:
Low Voltage Battery current / time > 6 amps / 60 min
Low Voltage Battery temperature gradient too high, gradient counter > 3
Low Voltage Battery temperature.> 140 deg F

High Voltage Battery Charging System - Overview

The high voltage battery charging system is responsible for charging the high voltage battery while the vehicle is not operating. It consists of an Electric Vehicle Supply Equipment (EVSE), Secondary OBD Module (also known as the Battery Changer Control Module and Charge Port Light Ring (CPLR).

The EVSE is an external AC charger that connects to an external voltage source and the vehicle charge port when the vehicle is not operating to charge the high voltage battery. The 110V (AC Level 1) charger and cord set plugs into a standard 110V AC outlet and comes with the vehicle when purchased. The 110V charger is rated up to 12 amps or up to 16 amps depending on the household receptacle being used. It is recommended to use a dedicated 110V electrical outlet to ensure adequate current supply for charging. A 220V (AC Level 2) charging station can also be utilized which is rated up to 80 amps.

The SOBDM, also known as the Battery Charger Control Module (BCCM), is an air-cooled component that charges both the high voltage battery and the low voltage (12V) battery when the vehicle is not operating and plugged into a (110V or 220V) EVSE. The SOBDM is known as the on-board charger. Its primary function is to coordinate charging operations and convert AC to DC. The SOBDM incorporates an integrated module that communicates with other modules over the HS-CAN, and is located inside the high voltage battery pack electronics compartment.

When the EVSE is plugged into the vehicle charging port, the CPLR indicates the current Customer State-of-Charge (CSoC) and charging operations of the high voltage battery. The CPLR is a light ring surrounding the charge port inlet that displays charging, charging faults and charging status using four LED light segments.

ED_002078G_00001322-00416

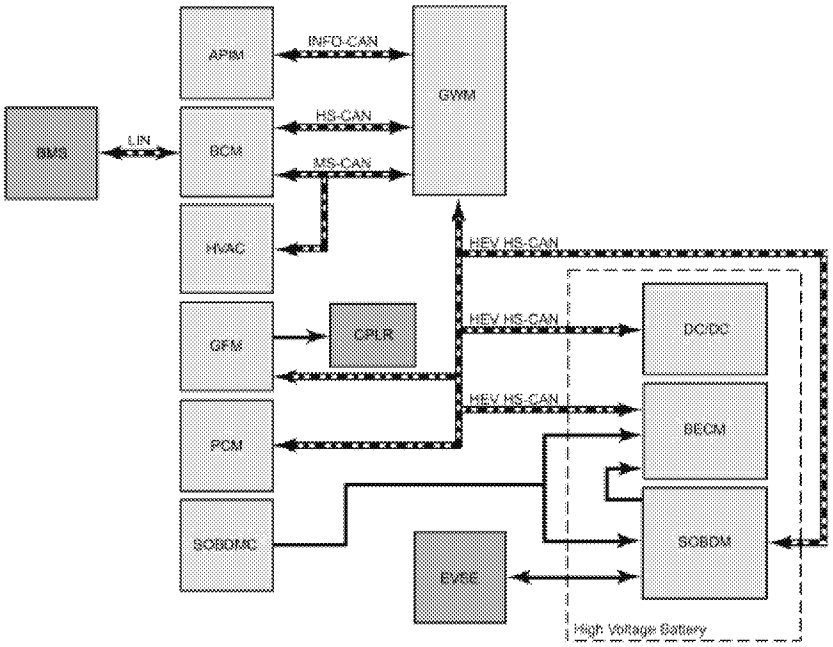

E159799

The SOBDM, also known as the BCCM (Battery Charger Control Module), charges the high voltage battery and has an internal DC to DC Converter Control Module to maintain the 12V battery while vehicle is plugged into an external 110V or 220V AC EVSE. The SOBDM is an air-cooled component that converts an input voltage of (120 or 240 volts) AC to high-voltage DC and low-voltage DC power, while maintaining electrical isolation between the systems. When plugged into an external power source the SOBDM is enabled and charges the high voltage battery (168-361 volts) and the low-voltage battery (12-15 volts). The SOBDM steps the high-voltage down to a low-voltage (between 12 and 15 volts, depending on vehicle needs), providing power to charge the vehicle low-voltage battery. During charge the SOBDM incorporates an internal DC/DC converter to charge the low-voltage battery directly.

When the EVSE cord is plugged in the SOBDM wakes up by sensing a control pilot signal. The pilot signal duty cycle is analyzed to determine AC line capacity and the frequency is monitored to make sure it is in the proper range. The EVSE monitors the pilot signal to determine when to turn on AC output. A separate proximity circuit signal is analyzed to confirm if the connection is stable and the S3 button on the external charger cord is released. If both signals are in correct range, the SOBDM transmits an on-plug message via HEV HS-CAN. The SOBDM confirms the gear position is in park and that the vehicle is not in torque producing mode via HEV HS-CAN and closes an internal S2 switch signaling the EVSE to send AC voltage to the SOBDM. The high voltage system does not charge if the gear position is is not in park or if the vehicle is started.

Switch S2 detection is determined by the pilot signal voltage change. If the AC voltage input is within range the SOBDM enables 12V battery charging and wakes up the BECM. While waiting to enter high voltage charging state, the SOBDM sets low voltage output to a minimum of 12.6V until it receives a low-voltage setpoint from the PCM via HEV HS-CAN. The SOBDM is ready for high voltage power conversion when it transmits a charger-ready message via the HEV HS-CAN.

The SOBDM internally transitions from a ready state to charging state of the high voltage battery upon receipt of a battery charge ready or charging message from the BECM via the HEV HS-CAN. When the BECM status goes from a charge ready to a charging state the charge contactors are closed to begin charging the high voltage battery. The SOBDM limits the voltage and current to the high voltage battery based on the maximum voltage and

current requests from the BECM via the HEV HS-CAN. The SOBDM transmits high voltage and current output internal measurements to the BECM via the HEV HS-CAN.

During high voltage charging the BECM commands the outside air (OSA) duct mode door actuator to open. This allows outside air to be pulled into the High Voltage Battery pack to cool SOBDM. The BECM monitors the mode door position and motor circuits and sets a DTC if a fault is detected. The SOBDM monitors its internal temperature and commands the charger cooling fan speed accordingly to prevent overheating. When high-voltage charging is complete the BECM charging state HEV HS-CAN message switches from charging to charging complete and opens the high voltage charge contactors. The SOBDM continues to charge the 12V battery while AC input is present except when commanded off by the SOBDMC.

During high 12V electrical loads or if the ignition is turned on while the vehicle is plugged in the main DC to DC Converter Control Module is enabled to charge the 12V battery. If this occurs, the SOBDM disables its low-voltage support and no longer charges the 12V battery. However, it continues charging the high voltage battery. The SOBDM shuts down if the PCM no longer requests low-voltage support and the BECM status is charge complete.

If the release button (S3) on the EVSE is pressed while low-voltage or high-voltage charging is in progress, the SOBDM detects a change of proximity circuit voltage. The high-voltage and the low-voltage DC charging simultaneously stops. The SOBDM disables power conversion and opens the internal S2 switch. When the EVSE detects an open S2 switch by sensing a pilot signal voltage change, it drops the AC voltage output to zero so the charger cord can be safely removed. This prevents arcing of the charge port terminals when the EVSE cord is disconnected.

The CPLR displays the current CSoC and charging operations of the high voltage battery. When plugged into an external power source (120 or 240 volts), the CPLR activates the light ring around the charge inlet port and performs a cord acknowledgment. If successful, this sequence flashes one light segment one at a time in order. The segments shut off and this sequence repeats 2 times. The CPLR displays charging, charging faults, and charging status. The light ring is segmented into 4 equal LEDs, each indicating the state of charge: • One segment flashing < 25% charged • One segment lit (one segment flashing) > 25% charged • Two segments lit (one segment flashing) > 50% charged • Three segments lit (one segment flashing) > 75% charged. A flashing ring segment indicates a charge is in progress. When all four rings are solidly lit, the charging operation is complete. If less than four rings are lit solid charging is not ready. When the charge is complete an internal timer starts to do a 3-5 minute shutoff to turn the LEDs off and put the module to sleep. The LEDs remain off until a Puddle Light Activation command is sent via the key fob or door handle. If there is a fault, all LED segments flash rapidly for no more than 5 minutes before going to sleep. LEDs illumination varies depending if it is daytime or nighttime.

To remove the EVSE cord press the release button to stop the charging process. All the LEDs shut off indicating it is safe to unplug the cord. There is a customer preference setting in the APIM to customize the operation of the CPLR. The options available include: 1. LEDs On (normal operation) 2. LEDs Off except for Cord Acknowledgements and Puddle Light Activation requests, 3. LEDs Off (this setting prevents LED operation for any reason).

Battery Charge Control Module Performance Check Operation:	
DTCs	P0D24 - Battery Charger Temperature Too High P0562 - System Voltage Low P0DAA - Battery Charging System Isolation Fault
Monitor execution	Charger active, on-plug, connected to EVSE and charging
Monitor Sequence	None
Sensors OK	
Monitoring Duration	60 sec

Battery Charge Control Module Performance malfunction thresholds:
P0D24 - Internal temperature too high P0562 - < 10.5V DC for 60 sec measured at charger B+ terminal P0DAA - The measured leakage voltage is used to calculate the resistance between each high voltage bus and chassis < 41 kohm when charge contactors are closed.

Battery Charge Control Module Functional Check Operation:	
DTCs	P0D59 - Proximity Detection Circuit High. P0D80 - Battery Charger Input Circuit/Open.
Monitor execution	P0D59: Charger is ON, PSR applied or active EVSE connected P0D80: On-Plug, EVSE active. connected to EVSE , and S2 closed
Monitor Sequence	None
Sensors OK	
Monitoring Duration	60 sec

Battery Charge Control Module Functional malfunction thresholds:
P0D59 - EVSE proximity circuit detected open. Proximity circuit detected >4.8V DC for 5 seconds. P0D80 – A/C Utility input not present after EVSE S2 switch closed. A/C Input voltage < 85 VAC for 30 seconds.

ED_002078G_00001322-00419

Battery Charge Control Module Performance Check Operation:	
DTCs	P0D67 - Battery Charger Control Module Performance.
Monitor execution	Charger active; connected to EVSE, S2 closed, and utility A/C is present to charger input
Monitor Sequence	None
Sensors OK	
Monitoring Duration	60 sec

Battery Charge Control Module Performance malfunction thresholds:
Internal on-board charger module fault detected that prevents charging functionality. Failure conditions include: Low Voltage circuit overvoltage, High Voltage circuit overvoltage, PFC failure, High Voltage circuit voltage or current control circuit fault, High Voltage circuit current sensor failure.

Battery Charging System Contactor Check Operation:	
DTCs	P0D0F - Battery Charging System Negative Contactor Stuck Closed P0D09 - Battery Charging System Positive Contactor Stuck Open
Monitor execution	
Monitor Sequence	None
Sensors OK	
Monitoring Duration	< 1sec

Battery Charging System Contactor malfunction thresholds:
P0D0F - Negative charge contactor status remains closed. Contactor measurement voltage reported over CAN to the BECM is >= (pack voltage - 20v) When charge negative contactor is being commanded from close to open. P0D09 - Charge positive contactor reported charger voltage over CAN to the BECM is > +/- 5% of Pack voltage AND the reported charger current over CAN to the BECM is < 0.5 amps AND both charge contactors are commanded closed AND both charge contactors have power when charge positive contactor is closed.

ED_002078G_00001322-00420

Battery Charging System Contactor Check Operation:	
DTCs	P0D0A - Battery Charging System Positive Contactor Control Circuit/Open P0D0D - Battery Charging System Positive Contactor Control Circuit High P0D0B - Battery Charging System Positive Contactor Control Circuit Range/Performance P0D14 - Battery Charging System Negative Contactor Control Circuit High
Monitor execution	
Monitor Sequence	None
Sensors OK	
Monitoring Duration	< 1sec

Battery Charging System Contactor malfunction thresholds:
P0D0A - Charge positive contactor reported charger voltage over CAN to the BECM is > +/- 5% of Pack voltage AND the reported charger current over CAN to the BECM is < 0.5 amps AND both charge contactors are commanded closed AND one or both charge contactors DO NOT have power when charge positive contactor is closed. P0D0D - Charge positive contactor low side driver in limited current mode. P0D0B - Charge contactor high side driver in overcurrent mode when any charge contactor is closed. P0D14 - Charge negative contactor low side driver in limited current mode.

High Voltage Battery - Overview

The plug in hybrid can be used as an electric vehicle, conventional hybrid vehicle, or both. The high voltage battery on the plug in hybrid application has more capacity than a full hybrid application and can be fully charged using EVSE (Electric Vehicle Supply Equipment) connected to the vehicle charge port. An EV button is located on the steering wheel to change the vehicle operating strategy.

The vehicle can be placed in electric mode only (EV NOW) allowing only the electric motor to propel the vehicle. In this mode the high voltage battery depletes and the gas engine does not operate unless a calibratable condition exists such as a malfunction, heavy acceleration, high electric motor temperature, elevated high voltage battery temperature, low high voltage battery state of charge, or certain climate control functions are selected (e.g. defrost).

The high-voltage system utilizes approximately 300 volts DC, provided through high-voltage cables to its components and modules. The high-voltage cables and wiring are identified by orange harness tape or orange wire covering. All high-voltage components are marked with high-voltage warning labels with a high-voltage symbol.

The high voltage battery pack consists of the following components:

High voltage battery service disconnect
High voltage battery RH and LH cooling inlet ducts
High voltage battery cooling fan and air outlet duct
High voltage battery inlet air temperature sensor
SOBDM/BCCM (Battery Charger Control Module)
SOBDM outside air duct
SOBDM cooling fan
BECM (Battery Energy Control Module)
DC/DC (Direct Current/Direct Current) converter control module
High voltage battery junction box
High voltage low current fuse (x3)
High voltage high current fuse
High voltage battery cell array cover (not serviceable)
High voltage battery cell arrays (not serviceable)
High voltage battery wiring harness (not serviceable)

The high voltage battery cell array cover, high voltage battery cell arrays, and high voltage battery wiring harness are serviced as part of the entire high voltage battery pack.
Direct Current/Direct Current (DC/DC) Converter Control Module

The Direct Current/Direct Current (DC/DC) converter control module is an air-cooled component that converts high voltage (168-361 volt) DC power to low-voltage (12 volt) DC power. The converter provides power to the vehicle 12-volt battery and low-voltage electrical systems. The SOBDMC requests the DC/DC converter control module to turn ON through an enable message over HS-CAN. The PCM sends a charging voltage setpoint request over HS-CAN to DC/DC converter control module. Depending on the vehicle and environmental conditions, the DC/DC converter control module is capable of outputting as many as 145 amps to the 12-volt battery.

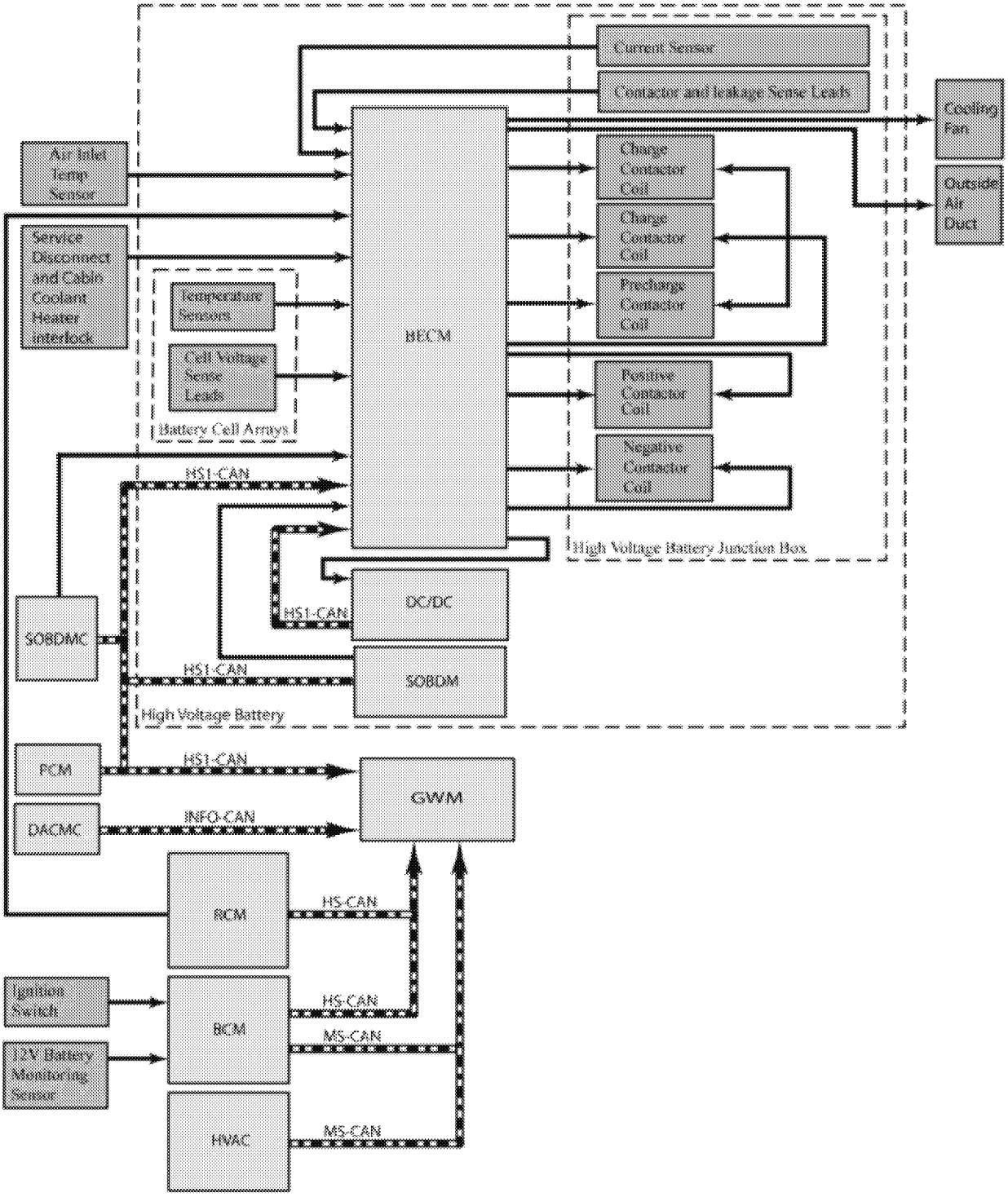
Current Sensor
Contactor and leakage Sense Leads
Cooling Fan
Outside Air Duct
Air Inlet Temp Sensor
Charge Contactor Coil
Charge Contactor Coil
Precharge Contactor Coil
Service Disconnect and Cable Coolant Heater Interlock
Temperature Sensors
Cell Voltage Sense Leads
Battery Cell Arrays
BECM
Positive Contactor Coil
Negative Contactor Coil
HS1-CAN
High Voltage Battery Junction Box
DC/DC
HS1-CAN
SOBDMC
HS1-CAN
SOBDM
High Voltage Battery
PCM
HS1-CAN
GWM
DACMC
INFO-CAN
RCM
HS-CAN
Ignition Switch
BCM
HS-CAN
MS-CAN
12V Battery Monitoring Sensor
HVAC
MS-CAN

E160358

Battery Energy Control Module (BECM)

The BECM manages the condition of the high voltage battery to control its charging and discharging. The BECM also manages the cooling of the high voltage battery by controlling a fan attached to the high voltage battery pack cooling outlet duct. The BECM monitors the individual cell voltages and temperature sensors internal to the battery arrays. The BECM also monitors the battery current using a sensor located in the high voltage battery junction box. This information is needed by the BECM to control the high voltage battery and determine its ability to receive and provide power to the vehicle. The BECM communicates with other vehicle modules on the High Speed Controller Area Network (HS-CAN).

The BECM receives the following hard-wired inputs:

- High voltage battery service disconnect interlock status
- Cabin Coolant heater interlock status (PHEV)
- Event notification status from the RCM
- High Speed Controller Area Network (HS-CAN)
- High voltage battery inlet air temperature sensor
- High voltage battery cooling fan feedback
- Outside air duct mode door actuator position (PHEV)

The BECM provides the following outputs:

- High voltage battery cooling fan PWM supply voltage
- Outside air duct mode door actuator (PHEV)
- High voltage battery junction box contactor control
- High Speed Controller Area Network (HS-CAN) information

Battery Energy Control Module Performance Check Operation:	
DTCs	U0300 - Internal Control Module Software Incompatibility U019B - Lost Communication With Battery Charger Control Module U3012 - Control Module Improper Wake-up Performance B11D5 - Restraints Event - Vehicle Disabled P0AA6 - Hybrid/EV Battery Voltage System Isolation Fault
Monitor execution	
Monitor Sequence	None
Sensors OK	
Monitoring Duration	< 1 sec

Battery Energy Control Module Performance malfunction thresholds:
U0300 - HW version and SW version not compatible
U019B - BCCM CAN message missing for 5 sec
U3012 - Power Sustain Relay Voltage <= 5.225 V or Contactor Open Request Not Received. Contactors are latched open due to LOW PSR but HPCM still requests contactors closed.
B11D5 - CAN signal from the Restraints Control Module indicates restraints event (crash) occurred.
P0AA6 - Leakage resistance < 195 kohm when charge contactors are closed.

ED_002078G_00001322-00424

Battery Pack Current Sensor Check Operation:	
DTCs	P0AC1 - Hybrid/EV Battery Pack Current Sensor "A" Circuit Low P0AC2 - Hybrid/EV Battery Pack Current Sensor "A" Circuit High P0AC0 - Hybrid/EV Battery Pack Current Sensor "A" Circuit Range/Performance P0AC3 - Hybrid/EV Battery Pack Current Sensor "A" Circuit Intermittent/Erratic
Monitor execution	P0AC0: At a power up before contactors are closed All others: continuous
Monitor Sequence	None
Sensors OK	
Monitoring Duration	< 1 sec

Battery Pack Current Sensor malfunction thresholds:
P0AC1 – Battery current <= 293.75 A
P0AC2 – Battery current => 293.75 A
P0AC0 – Battery current <= 3A or => 3A at power up before contactors are closed
P0AC3 – Battery current reference voltage > 5.5V or < 4.5 V

Battery Pack Sensor Check Operation:	
DTCs	P0AA7 - Hybrid/EV Battery Voltage Isolation Sensor Circuit P1A3A - Hybrid/EV Battery Pack Voltage Sense System - Multiple Sensor Correlation P1A39 - Hybrid/EV Battery Temperature Sensor System - Multiple Sensor Correlation
Monitor execution	
Monitor Sequence	None
Sensors OK	
Monitoring Duration	< 1 sec

Battery Pack Sensor malfunction thresholds:
P0AA7 - The estimated pack voltage derived from the sum of the positive and negative leakage voltage is not <= 22.3982 v of the actual measured pack voltage P1A3A - Pack voltage > 390 V, or < 1/2 of sum of cell voltages, and Half pack voltage < 35 V, or > 200V P1A39 - Multiple temperature sensor faults. Sensor fault can be either of the following: • Measurement > 95 deg C, or < -50 deg C. • | Any temp sensor - average of all temp sensors | > 25 deg C.

ED_002078G_00001322-00425

Battery Pack Performance Check Operation:	
DTCs	P0B24 - Hybrid/EV Battery ""A"" Voltage Unstable P0C30 - Hybrid/EV Battery Pack State of Charge High P0AFB - Hybrid/EV Battery System Voltage High P0B25 - Hybrid/EV Battery "A" Voltage Low P0D37 - Hybrid/EV Battery System Current High P0A7F - Hybrid/EV Battery Pack Deterioration
Monitor execution	
Monitor Sequence	None
Sensors OK	
Monitoring Duration	< 15 seconds

Battery Pack Performance malfunction thresholds:

P0B24 - Average cell voltage minus any cell voltage > 0.5 volts for 15 sec

P0C30 -

- State of charge => 100% when charge contactors are open (main contactors open or closed)
- Cell voltage > 4.5V when charge contactors are open (main contactors open or closed)
- State for charge => 101% when charge contactors are closed
- Cell voltage > 4.14 V when charge contactors are closed

P0AFB – Pack voltage > 362 V

P0B25 – State of change = 0% with main contactors open or closed

P0D37 – Battery current > 180 A for 200 sec, or > 250 A for 60 sec.

P0A7F – Battery pack power < 12 KW

ED_002078G_00001322-00426

Cell Balancing

Individual cells can deviate over the life of the high voltage battery. The purpose of cell balancing is to equalize the individual cell charges. By balancing the cells the high voltage battery maintains top efficiency. The BECM continuously monitors individual battery cell voltages and will perform balancing automatically only when required. When balancing is performed BECM discharges individual cells with the highest voltage to match the remaining cells.

Battery Pack Cell Balance Circuit Check Operation:	
DTCs	P0DAD - Hybrid/EV Battery Cell Balancing Circuit "A" Stuck On. P0DB1 - Hybrid/EV Battery Cell Balancing Circuit "B" Stuck On. P0DB5 - Hybrid/EV Battery Cell Balancing Circuit "C" Stuck On. P0DB9 - Hybrid/EV Battery Cell Balancing Circuit "D" Stuck On. P0DBD - Hybrid/EV Battery Cell Balancing Circuit "E" Stuck On. P0DC1 - Hybrid/EV Battery Cell Balancing Circuit "F" Stuck On. P0DC5 - Hybrid/EV Battery Cell Balancing Circuit "G" Stuck On. P0DC9 - Hybrid/EV Battery Cell Balancing Circuit "H" Stuck On. P0DCD - Hybrid/EV Battery Cell Balancing Circuit "I" Stuck On. P0DD1 - Hybrid/EV Battery Cell Balancing Circuit "J" Stuck On. P0DD5 - Hybrid/EV Battery Cell Balancing Circuit "K" Stuck On. P0DD9 - Hybrid/EV Battery Cell Balancing Circuit "L" Stuck On. P0DDD - Hybrid/EV Battery Cell Balancing Circuit "M" Stuck On. P0DE1 - Hybrid/EV Battery Cell Balancing Circuit "N" Stuck On. P0DAE - Hybrid/EV Battery Cell Balancing Circuit "A" Stuck Off. P0DB2 - Hybrid/EV Battery Cell Balancing Circuit "B" Stuck Off. P0DB6 - Hybrid/EV Battery Cell Balancing Circuit "C" Stuck Off. P0DBA. Hybrid/EV Battery Cell Balancing Circuit "D" Stuck Off. P0DBE. Hybrid/EV Battery Cell Balancing Circuit "E" Stuck Off. P0DC2 - Hybrid/EV Battery Cell Balancing Circuit "F" Stuck Off. P0DC6 - Hybrid/EV Battery Cell Balancing Circuit "G" Stuck Off. P0DCA - Hybrid/EV Battery Cell Balancing Circuit "H" Stuck Off. P0DCE. Hybrid/EV Battery Cell Balancing Circuit "I" Stuck Off. P0DD2 - Hybrid/EV Battery Cell Balancing Circuit "J" Stuck Off. P0DD6 - Hybrid/EV Battery Cell Balancing Circuit "K" Stuck Off. P0DDA - Hybrid/EV Battery Cell Balancing Circuit "L" Stuck Off. P0DDE - Hybrid/EV Battery Cell Balancing Circuit "M" Stuck Off. P0DE2 - Hybrid/EV Battery Cell Balancing Circuit "N" Stuck Off.
Monitor execution	At a power up before contactors are closed, and two consecutive power cycles
Monitor Sequence	None
Sensors OK	
Monitoring Duration	100 msec

ED_002078G_00001322-00427

Battery Pack Cell Balance Circuit Check malfunction thresholds:
For the 6 cells monitored by each circuit: Any individual cell voltage differs from the average cell voltage by > 75 mV

Battery Pack Contactor Check Operation:	
DTCs	P0AA4 - Hybrid/EV Battery Negative Contactor Circuit Stuck Closed P0AA5 - Hybrid/EV Battery Negative Contactor Circuit Stuck Open P0AA2 - Hybrid/EV Battery Positive Contactor Circuit Stuck Open P0B37 - High Voltage Service Disconnect Open
Monitor execution	
Monitor Sequence	None
Sensors OK	
Monitoring Duration	< 1 sec

Battery Pack Contactor malfunction thresholds:
P0AA4 - Negative contactor status remains closed. • Negative Contactor Measurement is > 90% Negative Half Pack voltage AND • Negative Contactor Measurement is < 110% Negative Half Pack voltage AND • Negative Contactor Measurement is > 30 volts. P0AA5 - Negative contactor is commanded closed AND there is power to the contactor AND the contactor state is determined open. Open is defined as NOT closed (i.e. mutually exclusive). Closed is defined above: P0AA2 - Positive contactor is commanded closed AND there is power to the contactor AND the contactor state is determined open. Open is defined as NOT closed (i.e. mutually exclusive). Closed is defined as: • Negative Contactor Measurement is > 90% Negative Half Pack voltage AND • Positive Contactor Measurement is < 110% Positive Half Pack voltage AND • Positive Contactor Measurement is > 30 volts P0B37 - The interlock and disconnect are mechanically interconnected such that removing the disconnect opens the interlock. Interlock status is reported open for the following criteria: PSR OR Charge wakeup is High, ACL latch is reported tripped by low level driver and interlock is reported open by low level driver. (ACL is anti-chatter latch).

ED_002078G_00001322-00428

Battery Pack Contactor Check Operation:	
DTCs	P0ADD - Hybrid/EV Battery Negative Contactor Control Circuit/Open P0AE0 - Hybrid/EV Battery Negative Contactor Control Circuit High P0AD9 - Hybrid/EV Battery Positive Contactor Control Circuit/Open P0ADC - Hybrid/EV Battery Positive Contactor Control Circuit High P0ADA - Hybrid/EV Battery Positive Contactor Control Circuit Range/Performance.
Monitor execution	
Monitor Sequence	None
Sensors OK	
Monitoring Duration	< 1 sec

Battery Pack Contactor malfunction thresholds:
P0ADD - battery interlock is normal AND PSR or Charge Wakeup is High AND Negative Contactor state is open AND one of the following is TRUE when negative contactor is closed: 1.) completed the power up sequence and contactors are commanded closed but no power 2.) pre-charge is NOT yet complete and contactors are commanded closed but no power. P0AE0 - Negative contactor low side driver in limited current mode. P0AD9 - battery interlock is normal AND PSR or Charge Wakeup is High AND Positive Contactor state is open AND one of the following is TRUE when positive contactor is closed: 1.) completed the power up sequence and contactors are commanded closed but no power 2.) pre-charge is NOT yet complete and contactors are commanded closed but no power. P0ADC - Positive contactor low side driver in limited current mode. P0ADA – Positive contactor high side driver in over current mode.

ED_002078G_00001322-00429

Battery Pack Precharge Contactor Check Operation:	
DTCs	P0AE1 - Hybrid/EV Battery Precharge Contactor Circuit P0AE7 - Hybrid/EV Battery Precharge Contactor Control Circuit High P0AE5 - Hybrid/EV Battery Precharge Contactor Control Circuit Range/Performance
Monitor execution	
Monitor Sequence	None
Sensors OK	
Monitoring Duration	< 1 sec

Battery Pack Precharge Contactor malfunction thresholds:
P0AE1 - Battery current < -10A or > -10A when precharge contactor is commanded closed P0AE7 - Precharge contactor lowside driver in limited current mode P0AE5 - | Pack voltage - sum of contactor voltages | > 20V when precharge contactor is commanded closed.

Battery Pack Cooling Fan Check Operation:	
DTCs	P0A81 - Hybrid/EV Battery Pack Cooling Fan 1 Control Circuit P0A82 - Hybrid/EV Battery Pack Cooling Fan 1 Performance/Stuck Off
Monitor execution	
Monitor Sequence	None
Sensors OK	
Monitoring Duration	< 45 sec

Battery Pack Cooling Fan malfunction thresholds:
P0A81 – Command fan PWM signal is reported out of range for 5 sec. P0A82 - Commanded fan speed > 699 RPM and feedback is less than 400 for 45 sec.

Transmission Overview

The Electronically Controlled Continuously Variable Transmission (eCVT) has the following internal components:

- Traction Motor
- Generator/Starter
- High voltage terminals
- Pump and filter assembly
- Transmission fluid auxiliary pump
- Transmission Range (TR) sensor
- Transmission Fluid Temperature (TFT) sensor
- Planetary carrier
- Differential carrier

When the transmission range is in the park position the park pawl locks the final drive to the transmission case and the vehicle cannot be moved. The vehicle can be turned on and the ready indicator light illuminates to indicate the selector lever can be moved out of park and the vehicle can be driven.

When the transmission range is in the reverse position, the TCM changes the polarity of the field coil which reverses the electric motor to move the vehicle in reverse.

When the transmission range is in the neutral position, the electric motor does not provide power to or hold the final drive and the final drive can spin freely.

When the transmission range is in the drive position, the TCM provides high voltage current to the electric motor to transfer torque to the final drive.

When the transmission range is in the low position, the transmission increases regenerative braking when the accelerator pedal is released to provide an engine braking feeling and increased battery charging.

The TFT sensor is a thermistor located on the internal transmission harness. It sends a voltage signal to the TCM. The voltage signal varies with TFT. The TFT sensor cannot be serviced in vehicle, the transmission must be removed and disassembled.

The TR sensor assembly is an internally mounted sensor that includes the detent bracket. The components of the TR sensor are factory adjusted and installed as a calibrated assembly. The TR sensor contains electronic circuitry that provides the PCM a fixed frequency duty cycle for each of the various positions of the manual lever (PARK, REVERSE, NEUTRAL, DRIVE and LOW). The TR sensor cannot be serviced in vehicle, the transmission must be removed and disassembled. The PCM uses the TR sensor signal for range selection, torque calculation and reverse lamp operation.

In electric mode, torque flows from the electric motor to the transfer shaft and to the final drive ring gear. When the engine is off, the planetary carrier is held and the planetary ring gear is driven by the transfer shaft. This action causes the sun gear and the generator/starter to rotate. Under certain conditions, the SOBDMC will command the generator/starter to produce electricity for the electric motor and to charge the batteries.

To start the engine, the final drive works as a holding element to the ring gear in the planetary assembly. The generator/starter turns the sun gear to start the engine.

To charge the batteries, the final drive works as a holding element to the ring gear in the planetary assembly. The engine turns the carrier. This action allows the generator/starter to produce current to charge the batteries and power the electric motor.

ED_002078G_00001322-00431

When additional torque is needed to propel the vehicle, the generator/starter works as a holding element to the planetary sun gear. The flow of torque from the transfer shaft to the planetary ring gear is reversed and torque from the engine combines with the electric motor torque at the transfer shaft.

The system diagram is shown below.

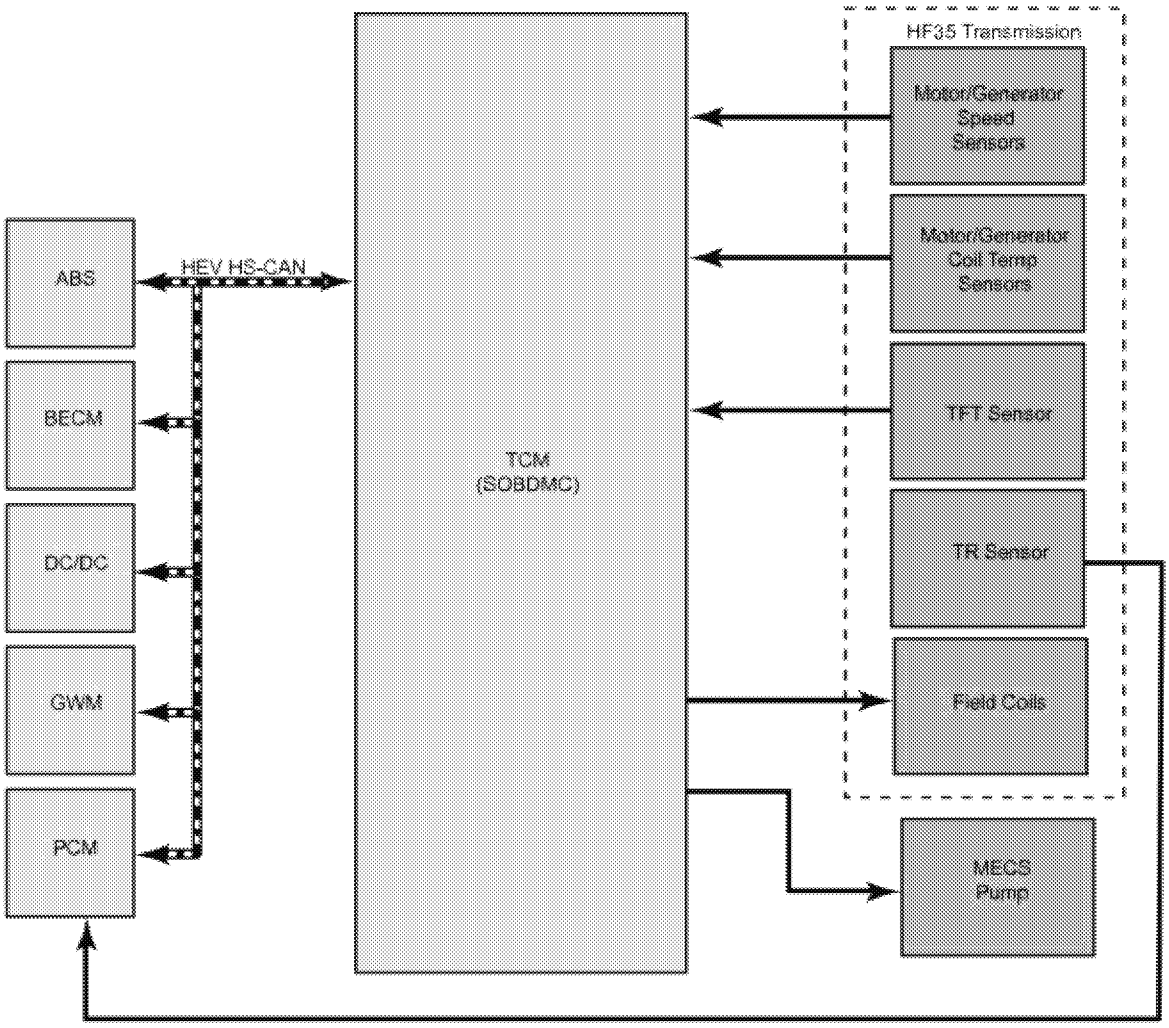

E159597

Transmission Control System Architecture

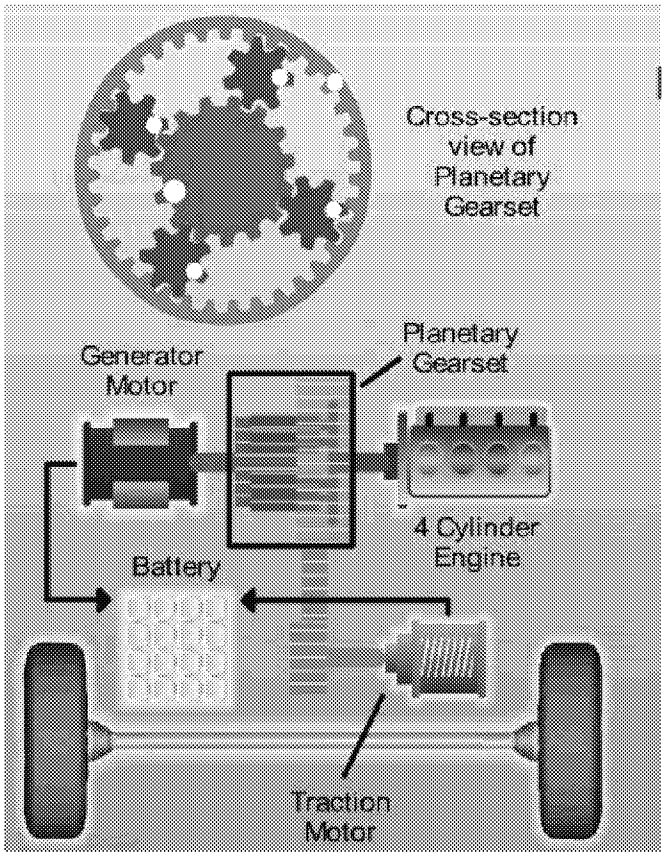

The primary function of the Powersplit transaxle is to manage torque between the electric motors, engine, and driveline. The planetary gear set provides series, parallel and split paths for power distribution from the battery and engine. The torque ratio between the series path and the parallel path is fixed by the geometry of the planetary gear set. The power split between the series path and the parallel path is determined by the relative speeds (all series if vehicle speed is zero and engine is on; all parallel if generator is stopped; split otherwise)

The system behavior is similar to a CVT with the effective gear ratio between the engine and the wheels is determined by the split.

The transaxle is controlled directly by the Hybrid Powertrain Control Module (HPCM). The HPCM communicates to the Engine Control Module (ECM), ABS Module, Battery Energy Control Module (BECM), and Body Control Module (BCM) using the high speed CAN communication link. The HPCM incorporates a standalone OBD-II system. The HPCM independently processes and stores fault codes, freeze frame, supports industry-standard PIDs as well as J1979 Mode 09 CALID and CVN. The HPCM does not directly illuminate the MIL, but requests the ECM to do so. The HPCM is located inside the Inverter System Controller (ISC) which also houses the motor and generator power electronics and the Variable Voltage Controller (VVC) hardware. It is not internally serviceable with the exception of reprogramming.

Transmission Inputs

Rotor Position Sensors

A Rotor position sensor (resolver) is located on both the electric Motor and Generator and is used to detect the angular position of the rotor. The analog waveform generated by the resolver is converted into a digital signal by the Resolver to Digital (R/D) converter. The digital signal is used to calculate speed and angular acceleration which is used to control the electric Motor and Generator. The speed information is also used to calculate vehicle speed and is broadcasted to other modules over CAN. If a resolver hardware or wiring fault is detected, or a failure with the R/D converter is detected, a P0A90-xx fault for the motor or a P0A92-xx fault for the generator will be stored. If the resolver was not properly configured (initialized) by the assembly plant or if the ISC is replaced, a P0A3F-55 will be stored for the motor, or P0A4B-55 will be stored for the generator.

Temperature Sensors

The Transmission Fluid Temperature Sensor (TFT) is monitored for open and short circuit faults and for in-range faults (P0710-xx) where Trans Fluid, Motor Coil and Generator Coil temperatures do not correlate properly.

The Motor and Generator Coil Temperature Sensors are monitored for open and short circuit faults and for in-range faults where Trans Fluid, Motor Coil and Generator Coil temperatures do not correlate properly. P0A2A-xx and P0A2B-xx are related to Motor Coil Sensor failure, P0A36-xx and P0A37-xx are related to Generator Coil Sensor failure. The Motor and Generator coils are also monitored for over-temperature (P0A2F-94).

ED_002078G_00001322-00433

The Motor and Generator Inverter Temperature Sensors are monitored for open and short circuit faults. P0A78-11 and P0A78-13 are related to Motor Inverter Sensor failure, P0A7A-11 and P0A78-13 are related to Generator Inverter Sensor failure. The Motor and Generator Inverters are also monitored for over-temperature (P0A3C-94).

HPCM Outputs

Inverter Control

Upon receiving the wheel torque demanded by the driver from the ECM over CAN communication, the HPCM calculates the required torque of the electric Motor and Generator to meet driver demand. The HPCM will then control the inverter over U, V, and W phase gate signals to regulate DC current into AC current that is fed into the stator.

The Motor and Generator gate signal lines are monitored for open circuits. A P0A78-1C and P0A78-11 faults are for the Motor and a P0A7A-1C and P0A78-11 are for the Generator. The inverter is also monitored for various faults such as over current, current sensor fault, current regulation fault, temperature sensor fault, etc. and will store a P0A78 fault for the Motor and a P0A7A fault for the Generator upon detection of a malfunction.

Hybrid Powertrain Control Module (HPCM)

The HPCM monitors itself by using various software monitoring functions. The flash ROM is checked using a checksum calculation, and will set P0605-00 if ROM errors are detected. The EEPROM is emulated in the flash ROM.

The Motor/Generator Control Unit (MGCU) use similar types of RAM/ROM tests. If a fault is detected, a the MGCU will request to store P0A1B-06, P0A1B-49, P060C-41, or P060C-43 and these will be reported by the HPCM.

CAN Communications error

The HPCM receives information from the ECM (and various other modules) via CAN. If the CAN link fails, the HPCM no longer has torque or engine speed information available. The HPCM will store a U0100-00 fault code if it doesn't receive any more CAN messages from the ECM.

The HPCM receives wheel speed and brake torque request information from the Antilock Brake System (ABS) module. The HPCM will store U0121-00 fault code if communication with the ABS module is lost. The HPCM also receives information from the Battery Energy Control Module (BECM) and a U0111-00 fault will be stored if the communication with the BECM is lost.

ED_002078G_00001322-00434

Hybrid Powertrain Control Module (HPCM) External Inputs

The HPCM monitors several hardwired inputs from the following sources:

High Voltage (HV) Interlock (HVIL) is a switched input that monitors access to the HV DC connectors. If opened, it will cause the HV circuit to be de-energized and the vehicle will be shut down.

Clean Tach Out (CTO) is a signal from the ECM, which is used to determine Engine Speed.

Electric Motor Position Sensors are used to measure the angular position of the rotor for the motor and generator.

Electric Drive Temperature Sensors are used to monitor hardware component temperatures that are critical to the electric drive system.

Electric Vehicle (EV) Mode is a driver-selectable switched input that determines the driver's request for one of the special EV driving modes (PHEV only).

High Voltage Interlock

The HV Interlock (HVIL) monitors access to the high voltage DC connectors. When the cover for the high voltage DC connectors at the ISC is removed, the HVIL circuit is opened, thus causing the HPCM to request the HV contactors to be opened and the vehicle to shutdown.

High Voltage Interlock Open Check Operation:	
DTCs	P0A0A (High Voltage System Interlock Circuit)
Monitor execution	Continuous
Monitor Sequence	None
Sensors OK	
Monitoring Duration	100 msec

High Voltage Interlock Open check entry conditions:		
Entry Conditions	Minimum	Maximum
Time after vehicle power up	500 msec	none
12V Battery voltage	8.0 V	-
Vehicle Speed	-	< 2 kph

High Voltage Interlock Open check malfunction thresholds:
HVIL input circuit is OPEN (0 v).

ED_002078G_00001322-00435

CTO (Clean Tach Out)

The CTO signal is sent from the ECM to the HPCM. The signal is sent at 10 degrees before Top Dead Center (TDC) for each cylinder. Thus, for a 4 cylinder engine, this translates into the HPCM seeing this signal every 180 degrees of engine rotation. This signal is used to calculate Engine Speed and engine rotational position.

CTO Signal Check Operation:	
DTCs	P0726 (Engine Speed Input Circuit Range/Performance Signal Compare Failure)
Monitor execution	Continuous
Monitor Sequence	None
Monitoring Duration	2000 msec

CTO Input Circuit Failure and Out- of- Range check entry conditions:		
Entry Conditions	Minimum	Maximum
Time after vehicle power up	500 msec	none
12V Battery voltage	6.0 V	19.0 V
Engine Speed	50 rad/s	200 rad/s

CTO Input Circuit Out-of-Range check malfunction thresholds:
| ECM Engine Speed (CAN signal) – ECM Engine Speed (based on CTO) | > 50 rad/s for more than 200 msec

Electric Motor Position Sensors

These are used to measure the angular position of the rotor for the motor and generator. They are used by low-level machine control algorithms to calculate current angle. Also, they are used by higher-level control strategies to determine motor and generator rotational speeds and accelerations.

Motor/Gen Rotor Position Check Operation:	
DTCs	P0C17 (Drive Motor Position Sensor Not Learned) P0C50 (Drive Motor "A" Position Sensor Circuit "A") P0A44 (Drive Motor Position Sensor Circuit Overspeed) P0DFC (Generator Position Sensor Circuit Not Learned) P0A50 (Generator Position Sensor Circuit) P0A78 (Drive Motor Inverter Performance -- Circuit Voltage Out of Range) P0A7A (Generator Inverter Performance -- Circuit Voltage Out of Range) P0C50 (Drive Motor "A" Position Sensor Circuit "A") P0A90 (Drive Motor Performance) P0A40 (Drive Motor "A" Position Sensor Circuit Range/Performance) P0C64 (Generator Position Sensor Circuit "A") P0A92 (Hybrid Generator Performance) P0A4C (Generator Position Sensor Circuit Range/Performance)
Monitor execution	Continuous
Monitor Sequence	None
Monitoring Duration	

Motor/Gen Rotor Position Circuit Voltage Out-of-Range check entry conditions:		
Entry Conditions	Minimum	Maximum
Time after vehicle power up	50 msec	none
12V Battery voltage	6.0 V	19.0 V
Internal Communication Fault Check	PASS	
Gate Drive Circuit Fault Check	PASS	

Motor/Gen Rotor Position Circuit Overspeed entry conditions: Motor/Gen Performance General Signal Failure entry conditions: Motor/Gen Rotor Position Sensor Not Configured entry conditions:		
Entry Conditions	Minimum	Maximum
Time after vehicle power up	700 msec	none
12V Battery voltage	6.0 V	19.0 V
Internal Communication Fault Check	PASS	

ED_002078G_00001322-00437

Motor/Gen Performance Circuit Voltage Below Threshold entry conditions		
Entry Conditions	Minimum	Maximum
Time after vehicle power up	50 msec	none
12V Battery voltage	6.0 V	19.0 V
Internal Communication Fault Check	PASS	
Internal Reference Voltages Fault Check	PASS	
Gate Drive Circuit Fault Check	PASS	

Motor/Gen Performance Invalid Serial Data entry conditions:		
Entry Conditions	Minimum	Maximum
Time after vehicle power up	50 msec	none
12V Battery voltage	6.0 V	19.0 V
Internal Communication Fault Check	PASS	
Mot/Gen Speed	> 0 RPM	
Mot/Gen Inverter Over Current Fault	FAIL	

Motor/Gen Rotor Position Sensor Not Configured malfunction thresholds:
Motor/Generator Resolver Position (stored in EEPROM) is not in acceptable range.

Motor/Gen Rotor Position Circuit Overspeed malfunction thresholds:
(Motor measured speed is greater than 1596 for greater than 10 msec OR Motor measured speed is greater than 1544 for greater than 100 msec.) (Generator measured speed is greater than 1596 for greater than 10 msec OR Generator measured speed is greater than 1544 for greater than 100 msec.)

Motor/Gen Rotor Position Circuit Voltage Out-of-Range malfunction thresholds:
Motor/Generator Gate Drive Power Supply > 15.08 V OR Motor/Generator Resolver Power Supply less than 4.7 V OR greater than 5.3 V

Motor/Gen Drive Motor Performance General Signal Failure malfunction thresholds:
Motor/Generator Resolver hardwired fault line indicates faulted high-> 10ms if RUNNING. OR > 600ms at powerup OR Motor/Generator Resolver hardwired fault line intermittent

Motor/Gen Performance Circuit Voltage Below Threshold malfunction thresholds:
Motor/Generator Resolver circuit power supply less than 15.6 V OR greater than 21.5 V

Motor/Gen Performance Invalid Serial Data malfunction thresholds:
Motor/Generator Resolver ABZ data differs from serial data by more than 3.6 deg for more than 20 msec.

Motor/Gen Performance
35A difference between command and feedback for 500ms continuously.

ED_002078G_00001322-00438

Electric Motor HV Current Sensors

These are used by the MGCU (Motor/Generator Control Unit) to measure the AC current for each phase of the motor and generator. They are used by low-level machine control algorithms to calculate current magnitude and angle. Also, they are used by to insure correct connection of the AC 3-phase circuits to the motor and generator.

Motor/Gen Current Sensor Check Operation:	
DTCs	P0A78 (Drive Motor Inverter Performance - Current Above Threshold) P0A7A (Generator Inverter Performance - Current Above Threshold) P0C00 Drive Motor "A" Current Low) P0C03 (Drive Motor "B" Current Low) P1A16 (Variable Voltage Controller Voltage Control Circuit - Current Above Threshold) P0D2D (Drive Motor "A" Inverter Voltage Sensor Circuit)
Monitor execution	Continuous
Monitor Sequence	None
Monitoring Duration	

Motor/Gen Inverter Performance Current Above Threshold entry conditions:		
Entry Conditions	Minimum	Maximum
Time after vehicle power up	50 msec	none
12V Battery voltage	6.0 V	19.0 V
Internal Reference Voltages Fault Check	PASS	
Internal Inverter Fault Check	PASS	

Motor/Gen Inverter Performance Current Out-Of Range entry conditions:		
Entry Conditions	Minimum	Maximum
Time after vehicle power up	50 msec	none
12V Battery voltage	6.0 V	19.0 V
Internal Reference Voltages Fault Check	PASS	
Mot/Gen Operating Mode	Any mode except Terminate	

Variable Voltage Controller Control Circuit Current Above Threshold entry conditions:		
Entry Conditions	Minimum	Maximum
Time after vehicle power up	50 msec	none
12V Battery voltage	6.0 V	19.0 V
Internal Reference Voltages Fault Check	PASS	
VVC Operating Mode	Boost Mode	

ED_002078G_00001322-00439

Motor/Gen Inverter Performance Current Above Threshold malfunction thresholds:
Motor/Gen current sensor over current declared by MGCU: Motor current magnitude > 600A for 400us OR > 30 A for 200ms at power up Generator current magnitude > 300A for 400us OR > 15 A for 200ms at powerup

Motor/Gen Inverter Performance Current Out-Of Range malfunction thresholds:
Motor/Gen phase circuit fault declared by MGCU - < 5 A for duration of test (100ms) at power up

Variable Voltage Controller Control Circuit Current Above Threshold malfunction thresholds:
Variable Voltage Controller current measured greater than 300 amps.

Inverter DC Voltage Sensor Circuit malfunction thresholds:
< 0.235V for 100ms at power up

ED_002078G_00001322-00440

Electric Drive Temperature Inputs

Motor/Generator Coil Temperature Sensors

These temperature sensors are located on the coil windings of the stators of the motor and the generator.

Motor/Generator Coil Temperature Sensor check Operation:	
DTCs	P0A2C (Drive Motor "A" Temperature Sensor Circuit Low) P0A2D (Drive Motor "A" Temperature Sensor Circuit High) P0A2B (Drive Motor "A" Temperature Sensor Circuit Range/Performance) P0A2F (Drive Motor "A" Over Temperature -- Unexpected Operation) P0A38 (Generator Temperature Sensor Circuit Low) P0A39 (Generator Temperature Sensor Circuit High) P0A37 (Generator Temperature Sensor Circuit Range/Performance)
Monitor execution	Continuous
Monitor Sequence	None
Sensors OK	
Monitoring Duration	200 msec

Motor/Generator Coil Temp Circuit Short/Open check entry conditions:		
Entry Conditions	Minimum	Maximum
Time after vehicle power up	2 seconds	none
12V Battery voltage	6.0 V	19.0 V
Internal Reference Voltages Fault Check	PASS	

Motor/Generator Coil Temp Over Temp check entry conditions:		
Entry Conditions	Minimum	Maximum
Time after vehicle power up	500 msec	none
12V Battery voltage	6.0V	19.0 V
Sensors OK	Motor Temp Sensor = OK Generator Temp Sensor = OK Oil Temp Sensor = OK	
Internal Reference Voltages Fault Check	PASS	

Motor/Generator Coil Temp In-Range/Performance entry conditions:		
Entry Conditions	Minimum	Maximum
Time after vehicle power up	2 seconds	10 seconds
12V Battery voltage	6.0V	19.0 V
Sensors OK	Motor Temp Sensor = OK Generator Temp Sensor = OK Oil Temp Sensor = OK	
Internal Reference Voltages Fault Check	PASS	
Key-off timer	200 minutes	

Motor/Generator Coil Temp Sensor Low check malfunction thresholds:
Motor/Generator Coil Temp input voltage < 0.1 V for more than 32 msec

Motor/Generator Coil Temp Sensor High check malfunction thresholds:
Motor/Generator Coil Temp input voltage > 4.8 V for more than 32 msec

Motor/Generator Coil Temp Sensor Range/Performance check malfunction thresholds:
Motor Coil Temp (P0A2B) | Transmission Fluid Temperature - Generator Coil Temp | < 10 deg C AND | Transmission Fluid Temperature - Motor Coil Temp | > 30 deg C AND | Motor Coil Temp - Generator Coil Temp | > 30 deg C **Generator Coil Temp (P0A37)** | Transmission Fluid Temperature - Generator Coil Temp | > 30 deg C AND | Transmission Fluid Temperature - Motor Coil Temp | < 10 deg C AND | Motor Coil Temp - Generator Coil Temp | > 30 deg C

Motor/Generator Coil Temp Over Temp check malfunction thresholds:
Motor/Generator Coil Temp over Temp Motor/Generator Coil Temp > 140 deg C OR Transmission Oil Temp > 115 deg C

Transmission Fluid (Oil) Temperature Sensor

The Transmission Fluid Temperature sensor measures the temperature of the transmission fluid.

Trans Fluid Temperature check Operation:	
DTCs	P0713 (Transmission Fluid Temp Sensor Circuit High) P0712 (Transmission Fluid Temp Sensor Circuit Low) P0711 (Transmission Fluid Temp Sensor Circuit Range/Performance
Monitor execution	Continuous
Monitor Sequence	None
Sensors OK	
Monitoring Duration	200 msec

Trans Fluid Temp Circuit Low/High check entry conditions:		
Entry Conditions	Minimum	Maximum
Time after vehicle power up	0.5 seconds	
12V Battery voltage	6.0V	19.0 V
Internal Reference Voltages Fault Check	PASS	

Trans Fluid Temp Signal Range/Performance entry conditions:		
Entry Conditions	Minimum	Maximum
Time after vehicle power up	2 seconds	30 seconds
12V Battery voltage	6.0V	19.0 V
Internal Reference Voltages Fault Check	PASS	
Sensors OK	Motor Temp Sensor = OK Generator Temp Sensor = OK Oil Temp Sensor = OK	
Key-off timer	200 minutes	

Trans Fluid Temp Sensor Circuit High malfunction thresholds:
Transmission Fluid Temp input voltage < 0.1 V for more than 32 msec

Trans Fluid Temp Sensor Circuit Low malfunction thresholds:
Motor Coil Temperature > 10 deg C AND Generator Coil Temperature > 10 deg C AND Transmission Fluid Temp input voltage > 4.86 V for more than 32 msec

Trans Fluid Temp Sensor Range/Performance failure check malfunction thresholds:
| Transmission Fluid Temperature - Generator Coil Temp | > 30 deg C AND | Transmission Fluid Temperature - Motor Coil Temp | > 30 deg C AND | Motor Coil Temp - Generator Coil Temp | < 10 deg C

ED_002078G_00001322-00443

Motor/Generator Inverter Temperature Sensors

These temperature sensors are located on the Motor and Generator Inverters.

Motor/Generator Inverter Temperature Check Operation:	
DTCs	P0AEF (Drive Motor Inverter Temperature Sensor "A" Circuit Low) P0AF0 (Drive Motor Inverter Temperature Sensor "A" Circuit High) P0AEE (Drive Motor Inverter Temperature Sensor "A" Circuit Range/Performance) P0A3C (Drive Motor "A" Inverter Over Temperature) P0BCE (Generator Inverter Temperature Sensor "A" Circuit Low) P0CF (Generator Inverter Temperature Sensor "A" Circuit High) P0BCD (Generator Inverter Temperature Sensor "A" Circuit Range/Performance)
Monitor execution	Continuous
Monitor Sequence	None
Sensors OK	
Monitoring Duration	Continuous

Motor/Generator Inverter Temp Sensor Circuit Short/Open check entry conditions:		
Entry Conditions	Minimum	Maximum
Time after vehicle power up	500 msec	none
12V Battery voltage	6.0V	19.0 V
Internal Reference Voltages Fault Check	PASS	

Motor/Generator Inverter Temp Sensor Circuit Short/Open check entry conditions:		
Entry Conditions	Minimum	Maximum
Time after vehicle power up	500 msec	none
12V Battery voltage	6.0V	19.0 V
Internal Reference Voltages Fault Check	PASS	
Sensors OK	Motor Inverter Temp sensor = OK Generator Inverter Temp sensor = OK VVC IGBT Temp Sensor = OK VVC Inductor Temp Sensor = OK	

Motor/Generator Inverter Temp Sensor Short check malfunction thresholds:
Motor Inverter Temp input voltage < 0.78 V

Motor/Generator Inverter Temp Sensor Open check malfunction thresholds:
Motor Inverter Temp input voltage > 4.56 V

Motor/Generator Inverter Temp Over Temp check malfunction thresholds:
Voltage Boost Converter (VVC) IGBT temperature > 139 deg C OR Voltage Boost Converter (VVC) Inductor temperature > 159 deg C OR Generator Inverter IGBT temperature > 123 deg C OR Motor Inverter IGBT temperature > 123 deg C

Motor/Generator Temp Sensor Range/Performance failure check malfunction thresholds:
| Motor Temperature – Engine Coolant Temp | > 30 deg C AND Engin Off Soak Time > 210 min

High Voltage DC/DC Converter

Inverter High Voltage Sensor Check Operation:	
DTCs	P1A07 - Inverter High Voltage Performance P0C79 - Drive Motor "A" Inverter Voltage Too High P0DA8 - Hybrid/EV Battery Voltage/Drive Motor "A" Inverter Voltage Correlation
Monitor execution	Continuous
Monitor Sequence	None
Sensors OK	U0111, P0D2D
Monitoring Duration	Continuous

Inverter High Voltage Sensor check entry conditions:		
Entry Conditions	Minimum	Maximum
Time after vehicle power up	500 msec	none
12V Battery voltage	6.0V	19.0 V

Inverter High Voltage Sensor check malfunction thresholds:
P1A07 - Battery voltage CAN signal < 150V for 100ms OR measured input voltage signal voltage < 150V for 100ms
P0C79 - DC bus voltage measurement voltage > 516V for 10ms.
P0DA8 - Difference between High Voltage Battery voltage sensor and inverter input voltage sensor > 60V OR difference between input/output inverter voltage sensors > 60V.

ED_002078G_00001322-00445

Inverter DC/DC Converter Check Operation:	
DTCs	P1A16 - Variable Voltage Controller Voltage Control Circuit P1A17 - Variable Voltage Controller Processor P0A94 - DC/DC Converter Performance
Monitor execution	Continuous
Monitor Sequence	None
Sensors OK	P0560, P0562, U0111, P1A07
Monitoring Duration	Continuous

Inverter DC/DC Converter check entry conditions:		
Entry Conditions	Minimum	Maximum
Time after vehicle power up	500 msec	none
12V Battery voltage	6.0V	19.0 V

Inverter DC/DC Converter check malfunction thresholds:
P1A16:
Input voltage sensor reading below < 0.235V for 10 msec. OR
Current sensor reading > 300 Amps for 1 sec. OR
Motor/generator torque de-rate for voltage protection > 50% for 1 sec. OR
Voltage difference across Variable Voltage Converter > 30 V for 100 msec. during self-test OR
Variable Voltage Controller upper switch hardware failure for >200 usec.
P1A17:
Variable Voltage Controller Gate Drive power supply > 15.3V, < 0.1V OR
Variable Voltage Controller upper switch temperature sensor fault > 4.55V , < 0.779V OR
Variable Voltage Controller lower switch temperature sensor fault > 4.55V , < 0.779V OR
Variable Voltage Controller lower switch hardware failure for >200 usec
Variable Voltage Controller inductor current sensor offset > 15A at power-up
Variable Voltage Controller inductor current sensor voltage < 4.5V or > 6.0V
P0A94:
Calculated Inductor current is > 50 A different from measured current in controlled operating conditions for > 4 sec.

Inverter Inductor Temperature Sensor Check Operation:	
DTCs	P1A18 - Variable Voltage Controller Inductor Temperature Sensor Circuit P1A19 - Variable Voltage Controller Driver Temperature Sensor Circuit
Monitor execution	Continuous
Monitor Sequence	None
Sensors OK	P0560, P2610
Monitoring Duration	Continuous

Inverter Inductor Temperature Sensor check entry conditions:		
Entry Conditions	Minimum	Maximum
Time after vehicle power up	500 msec	none
12V Battery voltage	6.0V	19.0 V

Inverter Inductor Temperature Sensor check malfunction thresholds:
P1A18:
Inductor temperature sensor voltage < 0.067V, > 4.86V OR
Inductor Overtemperature conditions > 165 deg C for 1 sec OR
Inductor temperature differs from ECT > 30 deg C after a 180 min engine off soak time.
P1A19:
Power Electronics temperature differs from ECT > 30 deg C after a 180 min engine off soak time.

EV Mode Input Switch (PHEV only)

Electric Vehicle (EV) Mode is driver-selectable switched input that determines the driver's request for one of the three EV driving modes: ***Auto*** – this is normal PHEV operation (charge depleting) which attempts to minimize use of internal combustion engine operation until PHEV battery is mostly depleted then reverts to conventional hybrid (charge sustaining) operation, ***EV Now*** – this mode forces the internal combustion engine off under all non-faulted driving conditions, and ***EV Later*** – this mode forces the vehicle into conventional hybrid (charge sustaining) to allow a reserve of battery energy to be used later once driver selects Auto mode again.

EV (transmission) Mode Check Operation:	
DTCs	P071A (Transmission Mode Switch "A" Circuit -- intermittent) P071B (Transmission Mode Switch "A" Circuit Low)
Monitor execution	Continuous
Monitor Sequence	None
Sensors OK	
Monitoring Duration	Continuous

EV (transmission) Mode Check Circuit check entry conditions:		
Entry Conditions	Minimum	Maximum
Time after vehicle power up	500 msec	none
12V Battery voltage	6.0V	19.0 V

EV (transmission) Mode Check Circuit intermittent check malfunction thresholds:
EV Switch transitions low to high more than 10 times in 300 msec.

EV (transmission) Mode Check Circuit Low malfunction thresholds:
EV Switch input remains low for more than 30 seconds.

Transmission Range Sensor Inputs

Transmission Range Sensor Check Operation:	
DTCs	P2800 – Transmission Range Sensor B Circuit (PRNDL input) P2806 – Transmission Range Sensor Alignment
Monitor execution	continuous
Monitor Sequence	None
Sensors OK	not applicable
Monitoring Duration	< 1 seconds to register a malfunction

Transmission range sensor check malfunction thresholds:					
TR Sensor	Park	Reverse	Neutral	Drive	Low
TR_A1 (VOLTS	3.84 - 4.77	2.58 - 3.31	1.82 - 2.56	0.97 - 1.79	0.20 - 0.92
TR_A2 (VOLTS	0.20 - 1.08	1.56 - 2.25	2.26 - 2.96	2.97 - 3.74	3.77 - 4.45

Transmission range sensor check malfunction thresholds:
P20800: INVALID gear position signal received over CAN from ECM.
P2806: Mechanical Parking Pawl failure. Motor rotates > 9 radians when parking pawl is expected to be engaged in transaxle.

ED_002078G_00001322-00449

Transmission Auxiliary Oil Pump

The transmission fluid pump is an internal pump bolted to the transmission case. The transmission fluid pump is turned by the input shaft and circulates transmission fluid through the transmission for lubrication and through an oil-to-air cooler mounted in the front of the radiator for transmission cooling. The transmission fluid pump only operates when the engine is running.

PHEVs also have an electric auxiliary transmission fluid pump to circulate the transmission fluid during extended drive times without engine charging. The auxiliary transmission fluid pump is controlled by the TCM.

Transmission Auxiliary Oil Pump Check Operation:	
DTCs	P175A - Transmission Fluid Over Temperature Condition - Electric Transmission Fluid Pump Disabled P0B0D - Electric/Auxiliary Transmission Fluid Pump Motor Control Module P0C27 - Electric/Auxiliary Transmission Fluid Pump "A" Motor Current Low P0C28 - Electric/Auxiliary Transmission Fluid Pump "A" Motor Current High P0C29 - Electric/Auxiliary Transmission Fluid Pump "A" Driver Circuit Performance P0C2A - Electric/Auxiliary Transmission Fluid Pump "A" Motor Stalled P0C2C - Electric Transmission Fluid Pump Control Module Feedback Signal Range/Performance P0C2D - Electric Transmission Fluid Pump Control Module Feedback Signal Low P0C2E - Electric Transmission Fluid Pump Control Module Feedback Signal High P2796 - Electric Transmission Fluid Pump Control Circuit
Monitor execution	continuous
Monitor Sequence	None
Sensors OK	not applicable
Monitoring Duration	< 1 seconds to register a malfunction

Transmission Auxiliary Oil Pump check entry conditions:		
Entry Conditions	Minimum	Maximum
Ambient Temperature	10 deg C	
12V Battery voltage	6.0V	19.0 V

ED_002078G_00001322-00450

Transmission Auxiliary Oil Pump check malfunction thresholds:
P175A: TAOP circuit board temperature > 130 deg C for 3 sec.
P0B0D: TAOP speed is > 105% or < 95% of commanded speed for 3 sec
P0C27: TAOP current is < 0.5 Amps at 1000rpm to <1.2 Amps at 4000rpm. For 3 sec
P0C28: TAOP current is > 12.5 Amps for 3 sec
P0C29: TAOP current and speed meet conditions for P0B0D and either P0C27 or P0C28 for 3 sec.
P0C2A: Pump speed =0 when commanded non-zero for 3 sec, OR circuit board temp > 135 deg C OR Over-current > 12.5 Amps for > 20 sec. OR Pump supplied voltage < 6.0 Volts or > 18.0 Volts for 325 ms.
P0C2C: Duty cycle of PWM signal measured by TAOP outside the 10 defined zones of operation > 3.0 sec.
P0C2D: Duty cycle of PWM signal measured from TAOP is < 9 % duty cycle for 3 seconds.
P0C2E: Duty cycle of PWM signal measured from TAOP is > 91 % duty cycle for 3 seconds.
P2796: PWM speed command signal on the separate control circuit < 80 Hz or > 120 Hz for 3 sec.

ED_002078G_00001322-00451

Motor Electronics Coolant Pump Control Circuit

Motor Electronics Coolant Pump Control Circuit Check Operation:	
DTCs	P0A06 (Motor Electronics Coolant Pump (MECP) Control Circuit Low) P0A07 (Motor Electronics Coolant Pump (MECP) Control Circuit High) P0C73 (Motor Electronics Coolant Pump "A" Control Performance)
Monitor execution	Continuous
Monitor Sequence	None
Sensors OK	
Monitoring Duration	5 sec

Motor Electronics Coolant Pump Control Circuit check entry conditions:		
Entry Conditions	Minimum	Maximum
Time after vehicle power up	500 msec	none
12V Battery voltage	6.0V	19.0 V

Motor Electronics Coolant Pump Control Circuit check malfunction thresholds:
P0A06 – MECP output driver faulted for > 5 sec
P0A07 - MECP output driver faulted (overcurrent) for > 0.25 sec
P0C73 – No communication received from pump > 9.25 sec OR communication received from pump that a confirmed fault exists > 1.25 sec OR communication received from pump outside of expected frequency/duty cycle > 1 sec.

ED_002078G_00001322-00452

General System Voltage Checks

General System Voltage Check Operation:	
DTCs	P0560 – System Voltage P0562 – System Voltage Low P0563 – System Voltage High P0A23 – Generator Torque Sensor Circuit Range/Performance P0A18 – Motor Torque Sensor Circuit Range/Performance P1633 - Keep Alive Power Voltage Too Low
Monitor execution	Continuous
Monitor Sequence	None
Sensors OK	
Monitoring Duration	< 1 sec

General System Voltage Check entry conditions:		
Entry Conditions	Minimum	Maximum
Time after vehicle power up	500 msec	none
12V Battery voltage	6.0V	19.0 V

General System Voltage check malfunction thresholds:

P0560:

- 5V power supply out of range (4.75V > x) OR (x > 5.25V)
- 3.3V power supply out of range (3.46V < x) OR (x < 3.13V)
- 1.5 V power supply out of range (1.57V < x) OR (x < 1.42V)

P0562:

- Battery voltage when vehicle is running and in a torque producing state < 8.2V
- KAPWR voltage out of range (x > 19.0V) OR (x < 5.95V)

P0563:

- Battery voltage too high> 19.0V

P0A23:

- Generator sensor reference voltage out of range > 6V or < 4.50V for 500ms.

P0A18:

- Motor current sensor reference voltage out of range > 6V or < 4.50V for 500ms.

P1633

- Voltage below 6.0V for 20 seconds, or 5 seconds during module self-test.

ED_002078G_00001322-00453

Internal ECU Checks

Internal ECU Check Operation:	
DTCs	P0600 – Serial Communication Link P0603 - Internal Control Module Keep Alive Memory (KAM) Error P0604 - Internal Control Module Random Access Memory (RAM) Error P0605 - Internal Control Module Read Only Memory (ROM) Error P0607 - Internal Control Module Read Only Memory (ROM) Error P060A – Internal Control Module Monitoring Processor P060B - Internal Control Module A/D Processing Performance P060C - Internal Control Module Main Processor Performance P0613 – TCM Processor P061A - Internal Control Module Torque Performance P06B8 - Internal Control Module Non-Volatile Random Access Memory (NVRAM) Error P0A1D - Hybrid/EV Powertrain Control Module "A" P1A08 - Generator Mode Signal
Monitor execution	Continuous
Monitor Sequence	None
Sensors OK	
Monitoring Duration	< 1 sec

Internal ECU Check malfunction thresholds:
P0600 – SPI message fault (checksum/header/timing/frame)
P0603 – KAM checksum error
P0604 – RAM checksum error
P0605 – ROM checksum error
P0607 - Error detected in CPU instruction test
P060A – Error detected in Motor Control Unit (RAM/ROM/Communications/Safety Monitor)
P060B – A/D redundant check error compared with main software A/D
P060C – CAN network data errors (torque/motor speed/pedal/gear/torque)
P0613 – Processor resets, micro software mismatch, torque validity
P061A – Excess torque detected
P06B8 – NVRAM read/write failure
P0A1D - Inter-processor Serial Communication failure
P1A08 - Generator mode command invalid for Neutral Gear operation when vehicle speed < 2 kph and gear position is NEUTRAL for < 1 sec.

ED_002078G_00001322-00454

General Hybrid System

General System Check Operation:	
DTCs	P0A1A - Generator Control Module P0A1B - Drive Motor “A” Control Module P1920 – Engine Speed Signal P1A13 - Hybrid Powertrain Control Module - Regenerative Braking Disabled P1A1B - Brake System Control Module - Forced Engine Running U0100 - Lost Communication With ECM / PCM "A" U0121 - Lost Communication With Anti-Lock Brake System (ABS) Control Module U0164 - Lost Communication With HVAC Control Module U0300 - Internal Control Module Software Incompatibility U0401 - Invalid Data Received from ECM/PCM "A" U0412 - Invalid Data Received from Battery Energy Control Module "A" U0418 - Invalid Data Received from Brake System Control Module "A"
Monitor execution	Continuous
Monitor Sequence	None
Sensors OK	P0A23, P0A92, P0A7A, P0C64 for P0A1A P1A18, P0A90, P0A78,P0C50 for P1A1B
Monitoring Duration	Continuous

General System Check malfunction thresholds:
P0A1A - Generator Torque estimate error, difference between Generator torque estimate and command > 40Nm for 550 ms or Total Torque estimate error, difference between Total torque command and Total torque > 800Nm more than demand for > 500ms.
P0A1B - Motor Torque Estimate Error, Difference between Motor torque estimate and command > 60Nm for 550 ms or Total Torque estimate error, Difference between Total torque command and Total torque estimate > 800Nm more than demand for > 500ms.
P1920 - Difference between engine speed CAN signal and internal engine speed calculation > 500 rpm for 500 ms OR > 550rpm for 1000 ms.
P1A13 - Regenerative Braking Disabled by request of Brake System Control Module due to regenerative braking system fault.
P1A1B – Forced Engine Running by request of Brake System Control Module due to regenerative braking system fault.
U0100 – Lost Communication with PCM > 1 sec.
U0121 – Lost Communication with ABS module > 1 sec.
U0164 - Lost Communication with HVAC module > 1 sec.
U0300 - Internal HPCM monitor software version mismatch.
U0401 - Invalid Data Received from ECM/PCM "A"
U0412 - Invalid Data Received from Battery Energy Control Module "A"
U0418 - Invalid Data Received from Brake System Control Module "A"

PCM On Board Diagnostic Executive

The On-Board Diagnostic (OBD) Executive is a portion of the PCM strategy that manages the diagnostic trouble codes and operating modes for all diagnostic tests. It is the "traffic cop" of the diagnostic system. The Diagnostic Executive performs the following functions:

- Sequence the OBD monitors such that when a test runs, each input that it relies upon has already been tested. For 2008 MY and beyond ISO 14229 programs, the OBD monitors are no longer sequenced by the diagnostic executive.
- Controls and co-ordinates the execution of the individual OBD system monitors: Catalyst, Misfire, EGR, O2, Fuel, AIR, EVAP and, Comprehensive Component Monitor (CCM). For 2008 MY and beyond ISO 14229 programs, the execution of the OBD monitors is no longer controlled and coordinated by the diagnostic executive.
- Stores freeze frame and "similar condition" data.
- Manages storage and erasure of Diagnostic Trouble Codes as well as MIL illumination.
- Controls and co-ordinates the execution of the On-Demand tests: Key On Engine Off (KOEO)Key On Engine Running (KOER), and the Output Test Mode (OTM). For 2008 MY and beyond ISO 14229 programs, the Output Test Mode is no longer supported by the diagnostic executive.
- Performs transitions between various states of the diagnostic and powertrain control system to minimize the effects on vehicle operation.
- Interfaces with the diagnostic test tools to provide diagnostic information (I/M readiness, various J1979 test modes) and responses to special diagnostic requests (J1979 Mode 08 and 09).
- Tracks and manages indication of the driving cycle which includes the time between two key on events that include an engine start and key off.

The diagnostic executive also controls several overall, global OBD entry conditions.

- The battery voltage must fall between 11.0 and 18.0 volts to initiate monitoring cycles.
- The engine must be started to initiate the engine started, engine running, and engine off monitoring cycles.
- The Diagnostic Executive suspends OBD monitoring when battery voltage falls below 11.0 volts.
- The Diagnostic Executive suspends monitoring of fuel-system related monitors (catalyst, misfire, evap, O2, AIR and fuel system) when fuel level falls below 15%. For 2005 MY and beyond, the execution of the fuel related OBD monitors is no longer suspended for fuel level by the diagnostic executive.

The diagnostic executive controls the setting and clearing of pending and confirmed DTCs.

- A pending DTC and freeze frame data is stored after a fault is confirmed on the first monitoring cycle. If the fault recurs on the next driving cycle, a confirmed DTC is stored, freeze frame data is updated, and the MIL is illuminated. If confirmed fault free on the next driving cycle, the pending DTC and freeze frame data is erased on the next power-up.
- For the 2005 MY and later, pending DTCs will be displayed as long as the fault is present. Note that OBD-II regulations required a complete fault-free monitoring cycle to occur before erasing a pending DTC. In practice, this means that a pending DTC is erased on the next power-up after a fault-free monitoring cycle.
- For clearing comprehensive component monitoring (CCM) pending DTCs, the specific monitor must determine that no fault is present, and a 2-hour engine off soak has occurred prior to starting the vehicle. The 2-hour soak criteria for clearing CCM confirmed and pending DTCs has been utilized since the 2000 MY. For 2008 MY and beyond ISO 14229 programs, the engine off soak is no longer used by the diagnostic executive.
- After a confirmed DTC is stored and the MIL has been illuminated, three consecutive confirmed fault-free monitoring cycles must occur before the MIL can be extinguished on the next (fourth) power-up. After 40 engine warm-ups, the DTC and freeze frame data is erased.

ED_002078G_00001322-00456

The diagnostic executive controls the setting and clearing of permanent DTCs.

- A permanent DTC is stored when a confirmed DTC is stored, the MIL has been illuminated, and there are not yet six permanent DTCs stored.
- After a permanent DTC is stored, three consecutive confirmed fault-free monitoring cycles must occur before the permanent DTC can be erased.
- After a permanent DTC is stored, one confirmed fault-free monitoring cycle must occur, following a DTC reset request, before the permanent DTC can be erased. For 2010MY and beyond ISO 14229 programs a driving cycle including the following criteria must also occur, following the DTC reset request, before a permanent DTC can be erased:
    - Cumulative time since engine start is greater than or equal to 600 seconds;
    - Cumulative vehicle operation at or above 25 miles per hour occurs for greater than or equal to 300 seconds (medium-duty vehicles with diesel engines certified on an engine dynamometer may use cumulative operation at or above 15% calculated load in lieu of at or above 25 miles per hour for purposes of this criteria); and
    - Continuous vehicle operation at idle (i.e., accelerator pedal released by driver and vehicle speed less than or equal to one mile per hour) for greater than or equal to 30 seconds.
- A permanent DTC can not be erased by a KAM clear (battery disconnect). Additionally, its confirmed DTC counterpart will be restored after completion of the KAM reset (battery reconnect).

ED_002078G_00001322-00457

Exponentially Weighted Moving Average

Exponentially Weighted Moving Averaging is a well-documented statistical data processing technique that is used to reduce the variability on an incoming stream of data. Use of EWMA does not affect the mean of the data, however, it does affect the distribution of the data. Use of EWMA serves to “filter out” data points that exhibit excessive and unusual variability and could otherwise erroneously light the MIL.

The simplified mathematical equation for EWMA implemented in software is as follows:

New Average = [New data point * “filter constant”] + [(1 - “filter constant”) * Old Average]

This equation produces an exponential response to a step-change in the input data. The "Filter Constant" determines the time constant of the response. A large filter constant (i.e. 0.90) means that 90% of the new data point is averaged in with 10% of the old average. This produces a very fast response to a step change. Conversely, a small filter constant (i.e. 0.10) means that only 10% of the new data point is averaged in with 90% of the old average. This produces a slower response to a step change.

When EWMA is applied to a monitor, the new data point is the result from the latest monitor evaluation. A new average is calculated each time the monitor is evaluated and stored in Keep Alive Memory (KAM). This normally occurs each driving cycle. The MIL is illuminated and a DTC is stored based on the New Average store in KAM.

In order to facilitate repair verification and DDV demonstration, 2 different filter constants are used. A “fast filter constant” is used after KAM is cleared or DTCs are erased and a “normal filter constant” is used for normal customer driving. The “fast filter” is used for 2 driving cycles after KAM is cleared/DTCs are erased, and then the “normal filter” is used. The “fast filter” allows for easy repair verification and monitor demonstration in 2 driving cycles, while the normal filter is used to allow up to 6 driving cycles, on average, to properly identify a malfunction and illuminate the MIL. This feature is called Fast Initial Response (FIR). The fast filter is always calibrated to 1.0 which means that the EWMA is effectively disabled because the new average is 100% of the new data point. Since the EWMA is effectively disabled, it takes twp driving cycles to set the MIL. The first driving cycle with a fault will set a pending DTC; the second driving cycle will set a confirmed code and illuminate the MIL.

The other unique feature used with EWMA is called Step Change Logic (SCL). This logic detects an abrupt change from a no-fault condition to a fault condition. This is done by comparing the new data point to the EWMA old average. If the two points differ by more than a calibrated amount (i.e. the new data point is outside the normal distribution), it means that a catastrophic failure has occurred. The fast filter is then used in the same manner as for the FIR feature above. Since the EWMA is effectively disabled, it takes twp driving cycles to set the MIL. The first driving cycle with a fault will set a pending DTC; the second driving cycle will set a confirmed code and illuminate the MIL. The SCL becomes active after the 4th "normal" monitoring cycle to give the EWMA a chance to stabilize.

During "normal" EWMA operation, a slower filter constant is used. The "normal filer" allows the MIL to be illuminated in 1 to 6 driving cycles. A confirmed code is set and the MIL is illuminated as soon as the EWMA crosses the malfunction threshold. There is no pending DTC because EWMA uses a 1-trip MIL.

In order to relate filter constants to driving cycles for MIL illumination, filter constants must be converted to time constants. The mathematical relationship is described below:

Time constant = [(1 / filter constant) - 1] * evaluation period

The evaluation period is a driving cycle. The time constant is the time it takes to achieve 68% of a step-change to an input. Two time constants achieve 95% of a step change input.

ED_002078G_00001322-00458

EWMA Examples

EWMA with FIR and SCL has been incorporated in the catalyst monitor, the Rear O2 response test and the EONV Evaporative system leak check monitor. There are 3 calibrateable parameters that determine the MIL illumination characteristics.

“Fast” filter constant (0.9999), used for 2 driving cycles after DTCs are cleared/KAM is reset (FIR) and for Step Change Logic (SCL)

“Normal” filter constant(typically 0.4),, used for all subsequent, “normal” customer driving

Number of driving cycles to use fast filter after KAM clear (normally set to 2 driving cycles)

Several examples for a typical catalyst monitor calibration are shown in the tables below. The first example does not show SCL in order to better illustrate the EWMA calculation and the 1-trip MIL.

Monitor evaluation (“new data”)	EWMA Filter Calculation, “normal” filter constant set to 0.4 Malfunction threshold = .75	Weighted Average (“new average”)	Driving cycle number	Action/Comment
0.15	.15 * (0.4) + .15 * (1 - 0.4)	0.15		normal 120K system
1.0	1.0 * (0.4) + .15 * (1 - 0.4)	0.49	1	large failure occurs
1.0	1.0 * (0.4) + .49 * (1 - 0.4)	0.69	2	
1.0	1.0 * (0.4) + .69 * (1 - 0.4)	0.82	3	exceeds threshold, MIL on
1.0	1.0 * (0.4) + .82 * (1 - 0.4)	0.89	4	MIL on
0.8	0.8 * (0.4) + .15 * (1 - 0.4)	0.41	1	1.5 * threshold failure
0.8	0.8 * (0.4) + .41 * (1 - 0.4)	0.57	2	
0.8	0.8 * (0.4) + .57 * (1 - 0.4)	0.66	3	
0.8	0.8 * (0.4) + .66 * (1 - 0.4)	0.72	4	
0.8	0.8 * (0.4) + .72 * (1 - 0.4)	0.75	5	equals threshold, MIL on
0.8	0.8 * (0.4) + .75 * (1 - 0.4)	0.77	6	MIL on
0.8	0.8 * (0.99) + 0* (1 - 0.99)	0.8	1	1.5 * threshold failure after code clear, pending DTC
0.8	0.8 * (0.99) + .8 * (1 - 0.99)	0.8	2	MIL on (I/M Readiness set to "ready"

ED_002078G_00001322-00459

I/M Readiness Code

The readiness function is implemented based on the J1979 format. A battery disconnection or clearing codes using a scan tool results in the various I/M readiness bits being set to a “not-ready” condition. As each non-continuous monitor completes a full diagnostic check, the I/M readiness bit associated with that monitor is set to a “ready” condition. This may take one or two driving cycles based on whether malfunctions are detected or not. The readiness bits for comprehensive component monitoring, misfire and fuel system monitoring are considered complete once all the non-continuous monitors have been evaluated. Because the evaporative system monitor requires ambient conditions between 40 and 100 °F and BARO > 22.5 " Hg (< 8,000 ft.) to run, special logic can “bypass” the running the evap monitor for purposes of clearing the evap system I/M readiness bit due to the continued presence of these extreme conditions.

Evap bypass logic:

If the evaporative system monitor conditions are met with the exception of the 40 to 100 °F ambient temperatures or BARO range, a timer is incremented. The timer value is representative of conditions where the Evap monitor could have run (all entry conditions met except IAT and BARO) but did not run due to the presence of those extreme conditions. If the timer continuously exceeds 30 seconds during a driving cycle in which all continuous and non-continuous monitors were evaluated, the evaporative system monitor is then considered complete. If the above conditions are repeated during a second driving cycle, the I/M readiness bit for the evaporative system is set to a “ready” condition.

ED_002078G_00001322-00460

Catalyst Temperature Model

A catalyst temperature model is currently used for entry into the catalyst and oxygen sensor monitors. The catalyst temperature model uses various PCM parameters to infer exhaust/catalyst temperature. For the 1998 MY, the catalyst temperature model has been enhanced and incorporated into the Type A misfire monitoring logic. The model has been enhanced to include a misfire-induced exotherm prediction. This allows the model to predict catalyst temperature in the presence of misfire.

The catalyst damage misfire logic (Type A) for MIL illumination has been modified to require that both the catalyst damage misfire rate and the catalyst damage temperature is being exceeded prior to MIL illumination. This change is intended to prevent the detection of unserviceable, unrepeatable, burst misfire during cold engine start-up while ensuring that the MIL is properly illuminated for misfires that truly damage the catalyst.

Beginning with the 2007 MY, the catalyst temperature model is also used to generate the primary inputs to the CSER Monitor as described in that section of this document.

Serial Data Link MIL Illumination

The instrument cluster on some vehicles uses the CAN data link to receive and display various types of information from the PCM. For example, the engine coolant temperature information displayed on the instrument cluster comes from the same ECT sensor used by the PCM for all its internal calculations.

These same vehicles use the CAN data link to illuminate the MIL rather than a circuit, hard-wired to the PCM. The PCM periodically sends the instrument cluster a message that tells it to turn on the MIL, turn off the MIL or blink the MIL. If the instrument cluster fails to receive a message within a 5-second timeout period, the instrument cluster itself illuminates the MIL. If communication is restored, the instrument cluster turns off the MIL after 5 seconds. Due to its limited capabilities, the instrument cluster does not generate or store Diagnostic Trouble Codes.

ED_002078G_00001322-00461

2014 MY OBD System Operation

Summary for 6.7L Diesel Engines

Table of Contents

2014 MY OBD System Operation 1

Introduction – OBD-II and HD OBD 6

OBD-II Systems 6

OBD-II system implementation and operation is described in the remainder of this document. 6

General Description 6.7L Diesel Engine 6

System Schematic 6.7L Chassis Certified 8

2014 MY 6.7L V8 Diesel Exhaust Features, Medium Duty, Chassis Cert 11

2014 MY 6.7L V8 Diesel Exhaust Features, Medium Duty, Dyno Cert 11

NON-METHANE HYDROCARBON (NMHC) CONVERTING CATALYST MONITOR 12

Diesel Oxidation Catalyst Efficiency Monitor 12

Diesel Oxidation Catalyst DPF Regeneration Assistance Monitor 13

Diesel Oxidation Catalyst SCR Assistance Monitor 13

OXIDES OF NITROGREN (NOx) CONVERTING CATALYST MONITORING 13

Selective Catalyst Reduction Catalyst Efficiency Monitor 13

Selective Catalyst Reduction Feedback Control Monitors 14

Exhaust Temperature Controller Monitor 15

Selective Catalyst Reduction Tank Level 16

MISFIRE MONITOR 18

Misfire System Overview 18

Misfire Algorithm Processing 18

FUEL SYSTEM MONITOR 20

Fuel System Overview 20

Fuel Rail Pressure Sensor Circuit Check 20

Fuel Rail Pressure Sensor Range Check: 21

Injector Code Missing/Invalid: 26

Fuel system pressure control: 26

Fuel Rail Pressure Monitors: 26

Injection Timing / Injection quantity 27

Zero Fuel Calibration: 27
Fuel Mass Observer: (Global Fuel Bias) 29
Global Fuel Timing: 30
Feedback control: 31
EXHAUST GAS SENSOR MONITOR 35
Air-Fuel Ratio Sensors: Feedgas NOx Sensor Control Module 35
Air-Fuel Ratio Sensors: Tailpipe NOx and O2 Sensor Control Module 42
EXHAUST GAS RECIRCULATION (EGR) SYSTEM MONITOR 50
EGR Rate System Monitor 50
EGR Cooler / EGR Cooler Bypass Monitor 52
EGR System Slow Response 57
EGR Control Limits Monitor 57
Mass Airflow Closed-loop Control Limits Monitor 58
BOOST PRESSURE CONTROL SYSTEM MONITORING 58
Intrusive Turbo Position and Response Monitoring 58
Intrusive Wastegate Monitoring 61
Functional Overboost Monitoring 62
Functional Underboost Monitoring 62
Threshold Underboost Monitoring 63
Threshold Overboost Monitoring 64
Charge Air Cooler Monitoring 67
PARTICULATE MATTER (PM) FILTER MONITORING 68
DPF Filter Efficiency Monitor 68
DPF Filter Missing Substrate Monitor 69
DPF Frequent Regeneration Monitor 70
DPF Incomplete Regeneration Monitor 71
DPF Feedback Control Monitors 72
DPF Restriction Monitor 73
ENGINE COOLING SYSTEM MONITORING 74
Thermostat Monitor 74
Primary Coolant Temp Dynamic Monitoring 77
Secondary Coolant Temp Dynamic Monitoring 78
COLD START EMISSION REDUCTION STRATEGY MONITORING 79
Cold Start Emission Reduction System Monitor (Only Chassis Cert. Applications) 79
Error if DTPost_DOC_model – DTPost_DOC_meas > Threshold 79
Cold Start Emission Reduction Component Monitor 80
Engine Sensors 83
Air Temperature Rationality Test 83
Figure : Air Temperature Plausibility Check Flow Chart 84

ED_002078G_00001322-00463

Ambient Air Temperature Physical Range Check 85
Ambient Air Temperature Plausibility Check 87
Barometric Pressure and Manifold Absolute Pressure 92
Turbine Upstream Pressure Sensor Plausibility Checks 94
Upstream Turbine Pressure Sensor Signal Range Check 95
EGR Valve Position Sensor 96
Throttle Position Sensor 96
EGR Downstream Temperature Sensor Dynamic Plausibility Check 97
Engine Coolant & Engine Oil Correlation 98
Cam and Crank Sensor: 102
Mass Air Meter 104
MAF Rationality Check 105
Air Path Leakage Check 107
DEF Pressure Sensor 112
DEF Pressure Sensor 112
Reductant Pressure Sensor Signal Range Check 113
Reductant Pressure Plausibility Check before Start-up 113
DEF Pressure Build-up Check at Start-up 114
DEF System Pressure Control 115
Reductant Tank Level Sensor 116
Reductant Tank Level Sensor: 116
Reductant Tank Level Sensor Circuit Tree: 116
Reductant Tank Level Sensor Circuit Checks 117
Reductant Tank Level Sensor Plausibility Check 118
Reductant Tank Temperature Sensor 118
Transfer Function 118
Plausibility Check 119
Exhaust Gas Temperature Sensor Rationality Test 120
Diesel Particulate Filter Pressure Sensor Rationality Test 123
Diesel Particulate Filter Pressure Offset Test 125
Diesel Particulate Filter Pressure Offset Test (DPS) 127
Engine Outputs 127
EGR Valve Actuator Signal Range Check 127
EGR Valve Actuator Jammed Detection 127
Throttle Valve Actuator Signal Range Check 128
Throttle Valve Actuator Jammed Detection 129
ECB Valve Actuator Signal Range Check 129
Urea System Pressure Control 130
Reductant Pump Motor 131

ED_002078G_00001322-00464

Reductant Pump Motor Circuit Checks 133
Reductant Pump Motor Functional Check 134
Reductant Dosing Valve (Injector) 134
Reductant Dosing Valve Circuit Checks 135
Reductant Dosing Valve Functional Check 137
Reverting Valve 138
Reverting Valve Circuit Checks 139
Reverting Valve Functional Check 139
Urea Heaters 140
Additional plausibility check for heater circuit #2: 142
Reductant tank heater performance check (heater circuit #1): 142
Lack of Communication Codes: 147
Glow Plugs 149
GPCM 149
Turbocharger Actuator Signal Range Check 154
Wastegate Vacuum Solenoid Signal Range Check 154
Miscellaneous ECU Errors: 155
Comprehensive Component Monitor - Transmission 155
General 155
Transmission Inputs 155
Transmission Outputs 158
Transmission Control Module (TCM) 163
6R140 (RWD) Transmission with external PCM or TCM 164
Transmission Range Sensor 164
TRID Block 166
If the system voltage at the TCM is outside of the specified 9 to 16 volt range, a fault will be stored (P0882, P0883). 167
On Board Diagnostic Executive 167
The diagnostic executive controls the setting and clearing of permanent DTCs 167
Exponentially Weighted Moving Average 168
Time constant = [(1 / filter constant) - 1] * evaluation period 168
I/M Readiness Code 169
Power Take Off Mode 169
Serial Data Link MIL Illumination 169
Calculated Load Value 170
I/M Readiness 170
Power Take Off Mode 171
In-Use Monitor Performance Ratio 171
Mode$06 Results 172

ED_002078G_00001322-00465

Introduction – OBD-II and HD OBD

OBD-II Systems

On Board Diagnostics II - Passenger Cars, Light-Duty Trucks, and Medium-Duty Vehicles and Engines certified under title 13, CCR section 1968.2

California OBD-II applies to all California and "CAA Sec. 177 States" for gasoline engine vehicles up to 14,000 lbs. Gross Vehicle Weight Rating (GVWR) starting in the 1996 MY and all diesel engine vehicles up to 14,000 lbs. GVWR starting in the 1997 MY.

"CAA Sec. 177 States" or "California States" are states that have adopted and placed into effect the California Air Resources Board (CARB) regulations for a vehicle class or classes in accordance with Section 177 of the Clean Air Act.. At this time, "CAA Sec. 177 States" are Massachusetts, New York, Vermont and Maine for 2004, Rhode Island, Connecticut, Pennsylvania for 2008, New Jersey, Washington, Oregon for 2009, Maryland for 2011, Delaware for 2014 and New Mexico for 2016. These States receive California-certified vehicles for passenger cars and light trucks, and medium-duty vehicles, up to 14,000 lbs. GVWR."

Federal OBD applies to all gasoline engine vehicles up to 8,500 lbs. GVWR starting in the 1996 MY and all diesel engine vehicles up to 8,500 lbs. GVWR starting in the 1997 MY. US Federal only OBD-certified vehicles may use the US Federal allowance to certify to California OBD II but then turn off/disable 0.020" evap leak detection).

Starting in the 2004 MY, Federal vehicle over 8,500 lbs. are required to phase in OBD-II. Starting in 2004 MY, gasoline-fueled Medium Duty Passenger Vehicles (MDPVs) are required to have OBD-II. By the 2006 MY, all Federal vehicles from 8,500 to 14,000 lbs. GVWR will have been phased into OBD-II.

Heavy Duty OBD Systems

Heavy Duty On-Board Diagnostics - Heavy-duty engines (>14,000 GVWR) certified to HD OBD under title 13, CCR section 1971.1(d)(7.1.1) or (7.2.2) (i.e., 2010 and beyond model year diesel and gasoline engines that are subject to full HD OBD)

Starting in the 2010 MY, California and Federal gasoline-fueled and diesel fueled on-road heavy duty engines used in vehicles over 14,000 lbs. GVWR are required to phase into HD OBD. The phase-in starts with certifying one engine family to HD OBD in the 2010 MY. (2010 MY 6.8L 3V Econoline) By the 2013 MY, all engine families must certify to the HD OBD requirements. Vehicles/engines that do not comply with HD OBD during the phase-in period must comply with EMD+.

OBD-II system implementation and operation is described in the remainder of this document.

General Description 6.7L Diesel Engine

The 6.7L is a V8 engine designed to meet customer expectations of high horsepower and torque with exceptional fuel economy and low NVH. It must do this while meeting the tough emissions standards set by the EPA and CARB.

Some of the technologies employed to meet these diverse criteria include a Variable Geometry Turbocharger (VGT), common rail fuel injection system, electronically controlled, cooled EGR, a diesel oxidation catalyst (DOC) , Selective Catalytic Reduction catalyst (SCR), Diesel Exhaust Fluid (DEF) injection system, and a diesel particulate filter (DPF).

The system schematic on the next page shows the path of the air as it is compressed by the turbocharger, cooled by the air-to-coolant intercooler, and mixed with the cooled EGR gases. The state of this compressed and heated air is sensed by the manifold absolute pressure (MAP) sensor just before it enters the cylinders and the two temperature sensors that represent Charge Air Cooler Outlet temperature (CACT1) and EGR Cooler outlet

ED_002078G_00001322-00467

temperature (EGRCOT). The exhaust gas pressure is measured by the exhaust backpressure (EP) sensor before it exits through the turbocharger. The exhaust after treatment system consists of a DOC, a SCR, a DPF and a muffler.

An electronic, proportional valve controls EGR rates with an integral position sensor (EGRP). Flows are determined by valve position and the amount that backpressure exceeds boost pressure. An EGR throttle (EGRTP) is used for regeneration control as well as to optimize the boost pressure vs. backpressure levels.

Fuel injection pressure is measured by the high-pressure fuel rail sensor (FRP). Injection pressure is controlled by the high pressure pump and two regulating valves, a Pressure Control Valve (PCV), and a Fuel Metering Unit (MeUn), formerly known as Volume Control Valve (VCV).

Engine speed (N) and crankshaft position are determined by the crankshaft position sensor (CKP) which senses a 60 minus 2 tooth target wheel. Camshaft position is determined by the camshaft position sensor (CMP), which senses the profile of a multiple lobed camshaft.

Atmospheric pressure is determined by the Barometric Pressure sensor (BARO) mounted internally in the Engine Control Module (ECM).

During engine operation, the ECM calculates engine speed from the crankshaft position sensor. The ECM controls engine operation by controlling the piezo injector opening and closing times as well as the pressure at which the fuel is injected, thereby controlling fuel quantity and timing. Simultaneously, airflow is modulated by controlling the turbocharger vane position.

Fuel quantity is controlled by injector “on time” (pulse width) and the fuel rail pressure. Desired engine speed is determined from the position of the accelerator pedal.

ED_002078G_00001322-00468

System Schematic 6.7L Chassis Certified

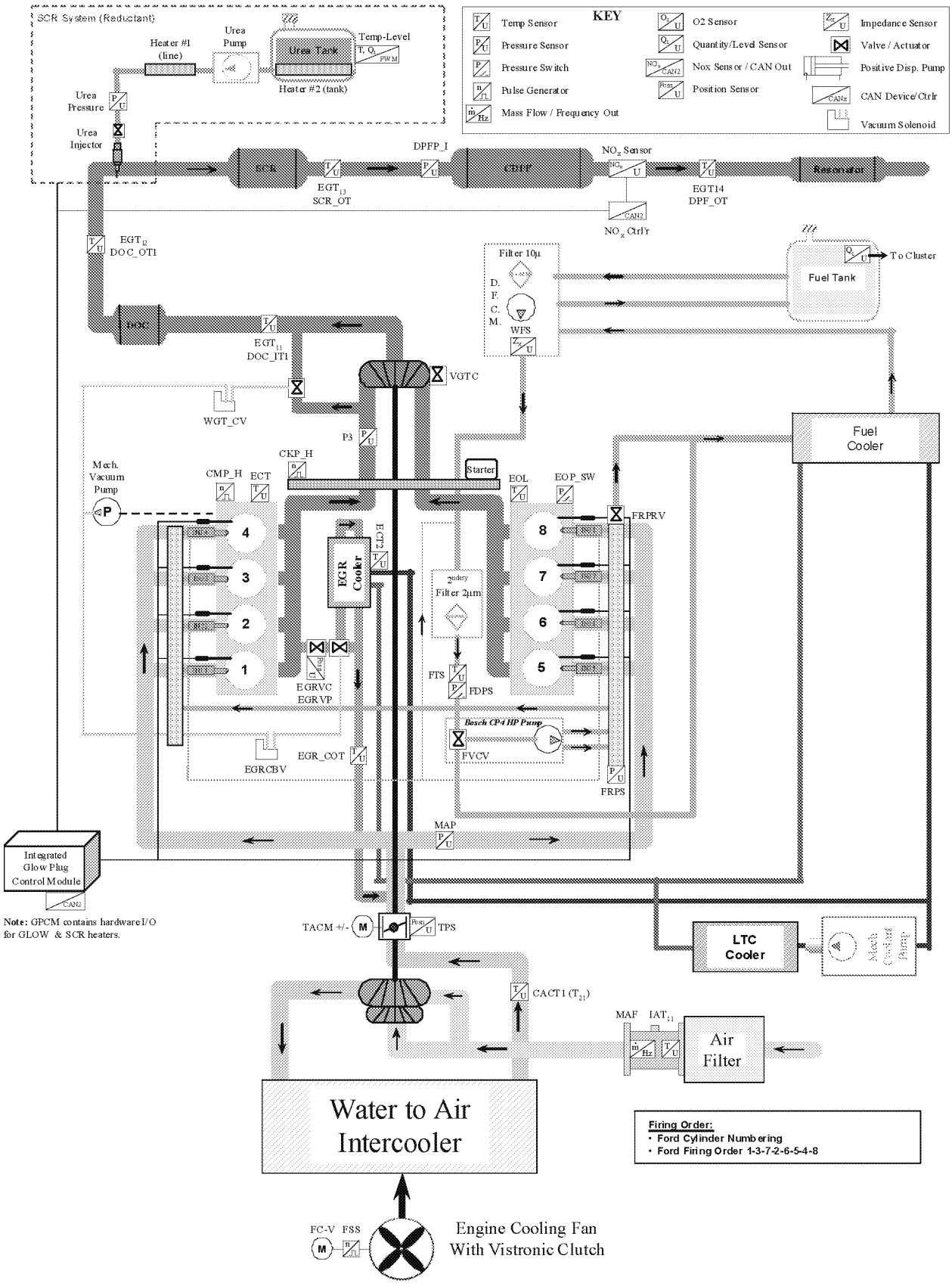

Actuators	Acronym	Sensors	Acronym
DEF (Reductant) System			
DEF Pump		DEF Temp-Level Combination Sensor	
DEF Tank Heater	Heater #1	DEF Pressure Sensor	
DEF Pump & Line Heater	Heater #2		
DEF Injector			
NOx Sensor System			
NOx Sensor Controller		NOx Sensor	
Boost System			
Variable Geometry Turbo Control	VGTC	Manifold Pressure Sensor	MAP
Turbocharger Wastegate Vacuum Control Solenoid	WGT_CV	Charge Air Cooler Temperature at Outlet	CACT1
		Mass Airflow Sensor	MAF
		Intake Air Temperature	IAT11
		Exhaust Back Pressure	EBP or P3
Exhaust Gas Recirculation System			
Exhaust Gas Recirculation Valve Control	EGRVC	Exhaust Gas Recirculation Valve Position	EGRVP
Exhaust Gas Recirculation Cooler Bypass Vacuum Control Solenoid	EGRCBV	Exhaust Gas Recirculation Cooler Gas Temperature at Outlet	EGR_COT
EGR Throttle Motor Control	TACM	EGR Throttle Position Sensor	TPS
Fuel System			
High Pressure Fuel Volume Control Valve	FVCV	High Pressure Fuel Rail Pressure Sensor	FRPS
High Pressure Fuel Pressure Relief Valve	FRPRV	Low Pressure Fuel Delivery Switch	FDPS
Fuel Injectors	INJ 1-8	Low Pressure Fuel Temperature Sensor	FTS
Low Pressure Fuel Pump and Filters	DFCM		
Water In Fuel Sensor	WFS		
Fuel Tank Level Sensor			
Glow Plug System			
Glow Plugs			
Glow Plug Controller	GPCM		
Exhaust System			
		Diesel Oxidation Inlet Temperature	DOC_IT or EGT11
		Diesel Oxidation Outlet Temperature	DOC_OT or EGT12
		Selective Catalytic Reduction Outlet Temperature	SCR_OT or EGT 13
		Upstream Catalyzed Diesel Particulate Filter Pressure	DPFP
		Downstream Diesel Particulate Filter Temperature	DPF_OT or EGT 14
Engine System			
Electric Clutch Fan Controller	FC-V	Cam Shaft Position Sensor	CMP
		Engine Coolant Temperature	ECT
		Crank Shaft Position Sensor	CKP
		Engine Oil Temperature	EOT
		Engine Oil Pressure Switch	EOP_SW
		Low Temperature Coolant Loop Temperature	ECT2
		Engine Fan Speed Sensor	FSS
		Environmental Temperature Sensor	ENV_T
		Barometric Pressure Sensor	BP

ED_002078G_00001322-00470

The dynamometer certified application of the 6.7L diesel engine has a similar layout to the chassis certified version. The main differences are the use of a single compressor stage on the boost system, lack of a wastegate, and a change in the order of the aftertreatment systems.

Dynamometer certified 6.7L exhaust system layout.

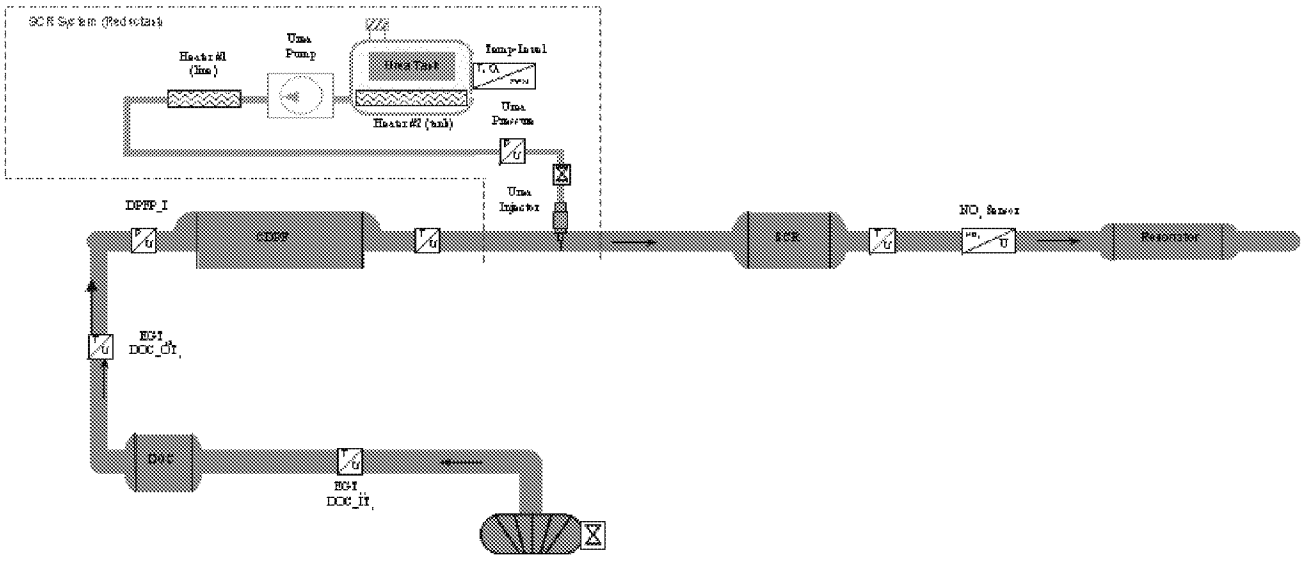

2014 MY 6.7L V8 Diesel Exhaust Features, Medium Duty, Chassis Cert

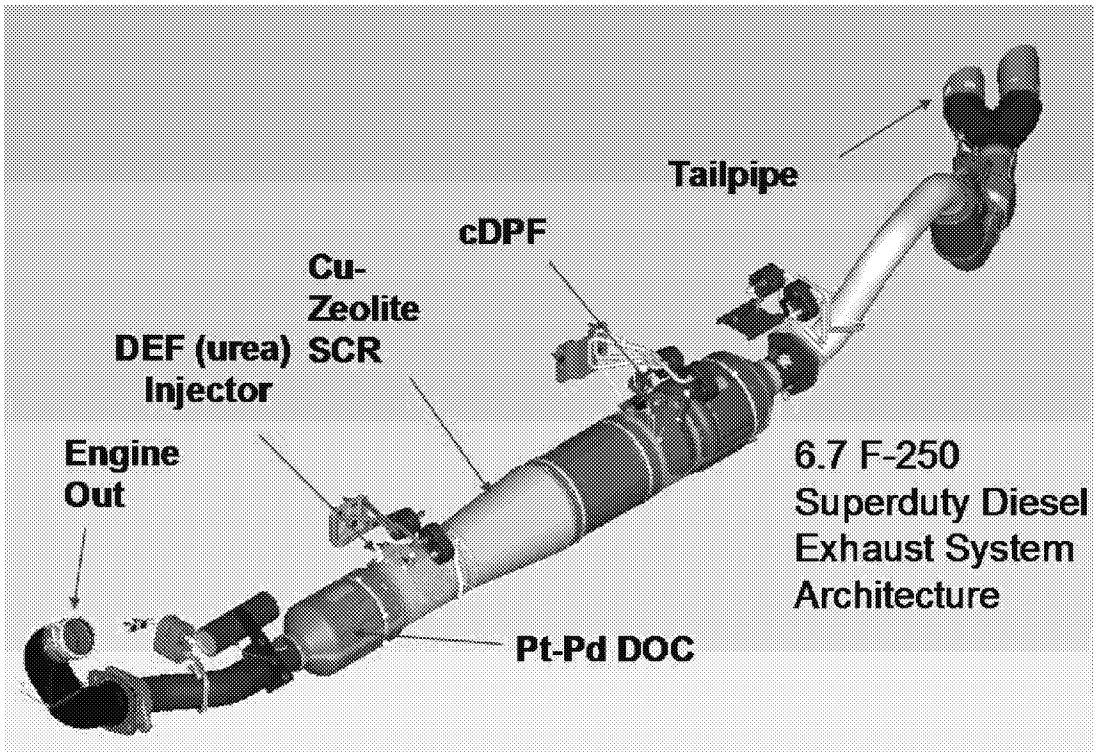

2014 MY 6.7L V8 Diesel Exhaust Features, Medium Duty, Dyno Cert

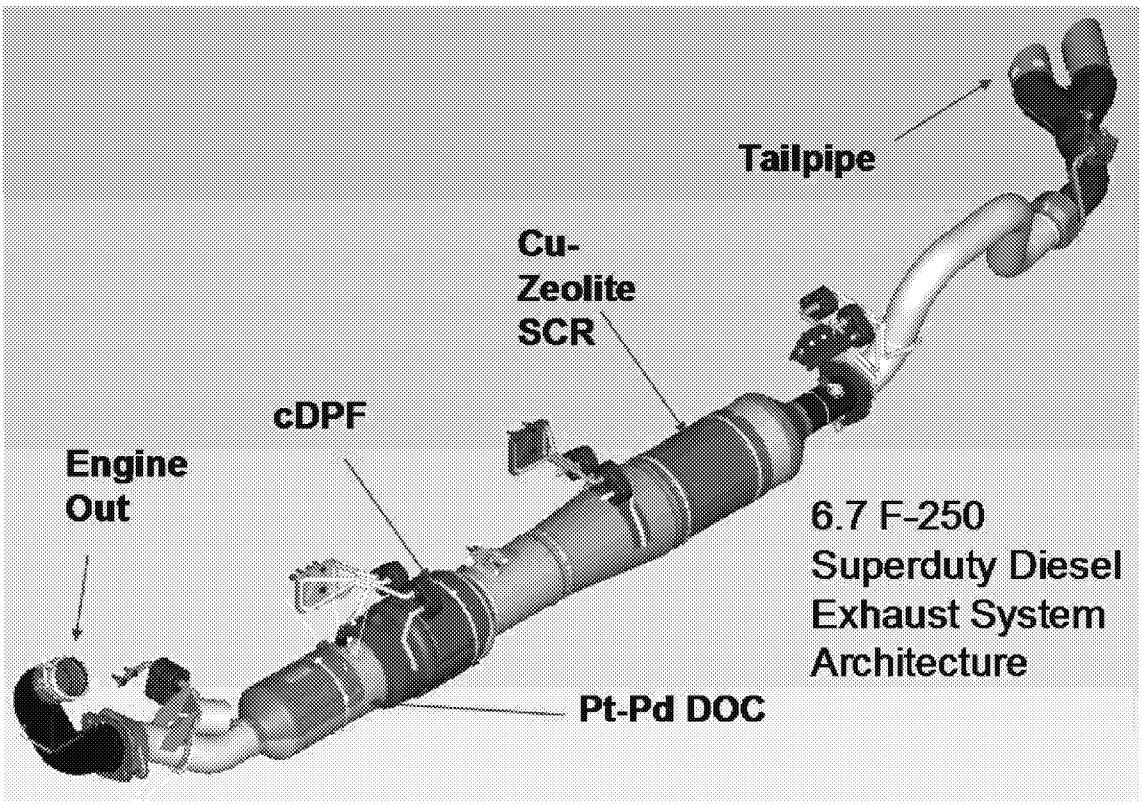

ED_002078G_00001322-00472

NON-METHANE HYDROCARBON (NMHC) CONVERTING CATALYST MONITOR

Diesel Oxidation Catalyst Efficiency Monitor

The Diesel Oxidation Catalyst (DOC) is monitored to ensure it is capable of converting hydrocarbons and carbon monoxide. The monitor is only run during aftertreatment regeneration events. After entering regen, there is a short delay to allow the DOC to achieve light-off temperature. Then the exotherm is monitored for a short period of time and normalized versus an expected exotherm (a function of post-injection fuel quantity and ambient air temp). The exotherm is defined as the DOC outlet temperature (EGT12) minus the DOC inlet temperature (EGT11). The normalized exotherm is filtered for a short period of time, and then compared to a threshold. If the normalized exotherm is below the threshold, a fault is indicated. No other preconditioning is required.

DOC Efficiency Monitor Summary:	
DTCs	P0420 – Catalyst System Efficiency Below Threshold
Monitor execution	Once per driving cycle during which an active DPF regeneration occurs
Monitor Sequence	None
Sensors OK	EGT11, EGT12, TCO, MAF, IAT
Monitoring Duration	4 minutes

Typical DOC Efficiency Monitor Entry Conditions:		
Entry condition	Minimum	Maximum
DPF regeneration event		
Engine speed	1000 rpm	3000 rpm
Torque set point	100 Nm	1000 Nm
Engine coolant temperature	70 deg C	
DOC inlet temperature	200 deg C	500 deg C
PTO inactive		

Typical DOC Efficiency Monitor Malfunction Threshold:
Normalized exotherm is less than 40% of the expected exotherm for 60 seconds

ED_002078G_00001322-00473

Diesel Oxidation Catalyst DPF Regeneration Assistance Monitor

The DOC is monitored to ensure it is capable of generating a sufficient exotherm to allow DPF regeneration events by burning the soot which is stored in the Diesel Particulate Filter (DPF). This is accomplished with the same diagnostic described above for the DOC Catalyst Efficiency Monitor.

Diesel Oxidation Catalyst SCR Assistance Monitor

The DOC in this system is not utilized to provide any changes in the feedgas constituency that would aid in the proper SCR operation.

OXIDES OF NITROGREN (NOx) CONVERTING CATALYST MONITORING

Selective Catalyst Reduction Catalyst Efficiency Monitor

The SCR catalyst is monitored to ensure it is capable of NOx conversion. The concentration of NOx upstream of the SCR is measured with a (feedgas) NOx sensor. NOx concentration downstream of the SCR is measured with a (tailpipe) NOx sensor. Using these concentrations, the cumulative efficiency of the SCR catalyst is calculated and compared to a threshold. If the cumulative efficiency is below this threshold at the end of the sample period (approx 1 minute), a fault will be indicated.

The reductant, Diesel Exhaust Fluid (DEF), which is used as part of the SCR catalyst reaction, is monitored to ensure the tank is not refilled with an improper reductant. After the SCR Catalyst Efficiency Monitor has completed and the SCR has been determined to be functional, the efficiency monitor continues to calculate the cumulative efficiency of the system, with a calibrated wait time between iterations of the monitor. Successive values for cumulative efficiency are included in two filtering routines, one for short term efficiency and the other for long term efficiency. If the difference between the two filtered efficiencies becomes greater than a threshold, a fault is indicated. The short term efficiency needs to be less than 0.45 and the delta between short and long term efficiency needs to be greater than 0.10.

Monitor Summary:	
DTCs	P20EE – SCR NOx Catalyst Efficiency Below Threshold P207F – Reductant Quality Performance
Monitor execution	P20EE - Once per driving cycle P207F – Continuously (while entry conditions are met)
Monitor Sequence	P20EE test followed by P207F test
Sensors OK	NOx, EGT12, EGT13, ECT, DEF injection system, MAF, BP, O2, DPFP, EGR system
Monitoring Duration	P20EE – 1 Minute, P207F – Dependent on driving conditions and DEF dilution

ED_002078G_00001322-00474

Typical Entry Conditions:		
Entry condition	Minimum	Maximum
SCR Feedback Control Enabled		
TP NOx sensor lit off and valid		
Regeneration Cycle Not Requested		
Engine coolant temperature	70 deg C	
Ambient air temperature	-6.7 degC	
Barometric Pressure	81.2 kPa	120 kPa
Engine Speed	1000 rpm	3000 rpm
Torque Transients	-30 N-m/s,	+10 N-m/s
Exhaust Space Velocity	5000 /hr	120,000 /hr
SCR Inlet and Outlet temperature	180 degC	320 degC
Filtered rate of change of SCR inlet temperature		30 seconds
Feedgas NOx	75	800
DEF storage	40% understored	10% overstored
Minimum NH3 storage	0.75 grams	
Delay between iterations of monitor (for DEF Quality monitor)	750 sec	
Short term efficiency (DEF Quality monitor)		0.45
Short term to long term efficiency delta (DEF Quality monitor)	0.1	

Typical Malfunction Thresholds:
P20EE: If the cumulative efficiency of the SCR Catalyst is less than 35% for approx 60 seconds., a fault is indicated. P207F: the short term Nox efficiency needs to be less than 0.45 and the delta between short and long term efficiency needs to be greater than 0.10. The fault will generally be detected within 1 hour under most conditions.

Selective Catalyst Reduction Feedback Control Monitors

The SCR system is monitored to ensure the proper closed loop control of the reductant injection. As part of the reductant injection control, a correction factor is adapted to account for long term drift of the system (injector, etc). This correction factor is monitored continuously. If the correction factor reaches a threshold in the positive or negative direction for a sufficient period of time, a fault will be indicated.

A SCR Time to Closed Loop monitor is implemented to ensure that SCR feedback occurs when expected. Once entry conditions are met, a timer is incremented. If the fraction of time in closed loop control is less than a threshold, a fault is indicated.

Additionally, the system has a temperature controller that increased the tailpipe temperatures under certain situations to improve the function of the SCR system. This controller is also monitored.

Monitor Summary:	
DTCs	P249D – SCR Feedback at Minimum Limit P249E – SCR Feedback at Maximum Limit P249C – SCR Time to Closed Loop
Monitor execution	Continuous
Monitor Sequence	None
Sensors OK	NOx, EGT12, EGT13,TCO, EGT11 EGT14, MAF, BP, IAT, DPFP, and EGR system
Monitoring Duration	5 minutes

Typical Entry Conditions:		
Entry condition	Minimum	Maximum
Low Temp Adaptation is enabled (Feedback monitor only)		
Engine speed	800 rpm	3000 rpm
Torque set point	0 Nm	1000 Nm
Barometric pressure	74.5 kPa	
Ambient temperature	-6.7 deg C	
Engine coolant temperature	70 deg C	
SCR temperature	160 deg C	550 deg C

Typical Malfunction Thresholds:
P249D: If the correction factor is clipped at its minimum value for 30 seconds then a fault is indicated. P249E: If the correction factor is clipped at its maximum value for 30 seconds then a fault is indicated. P249C: The error is set as soon as the fraction of closed loop operation vs expected is less than the threshold. The monitor needs to run for 300 seconds to call it complete.

Exhaust Temperature Controller Monitor

The monitoring of exhaust temperature is done by comparing the temperature deviation in between the setpoint temperature and the actual measured temperature with a maximum allowed deviation threshold.

Monitor Summary:	
DTCs	P22FF – SCR NOx Catalyst Inlet Temperature Too Low
Monitor execution	Continuous while entry conditions are meet
Monitor Sequence	None
Sensors OK	EGT12, ECT, BP, ENV_T, CKP, EGR system, Fuel injection system, PCV,
Monitoring Duration	300 seconds - Dependent on driving condtions

ED_002078G_00001322-00476

Typical Entry Conditions:		
Entry condition	Minimum	Maximum
Low Temp Adaptation is enabled (Feedback monitor only)		
Engine speed	0 rpm	5400 rpm
Torque set point	0 Nm	2700 Nm
Barometric pressure	80 kPa	
Ambient temperature	2.96 deg C	
Engine coolant temperature	17.46 deg C	

Typical Malfunction Thresholds:
P22FF: the error is set if the difference between scr temp calculated and measured is below 80 deg C for 300 seconds

Selective Catalyst Reduction Tank Level

The SCR system is monitored to ensure the level of DEF in the reductant tank is sufficient to achieve system performance. As part of the DEF level customer warning system, a fault will be recorded when the calculated mileage remaining of DEF is equal to 200 miles (The discrepancy between actual and reported mileage is due to expected tolerance of calculations). The calculated mileage remaining is derived from the three pin level sensor in the tank and the volume of DEF commanded to be injected over distance. This fault will be erased once the system senses a DEF refill event.

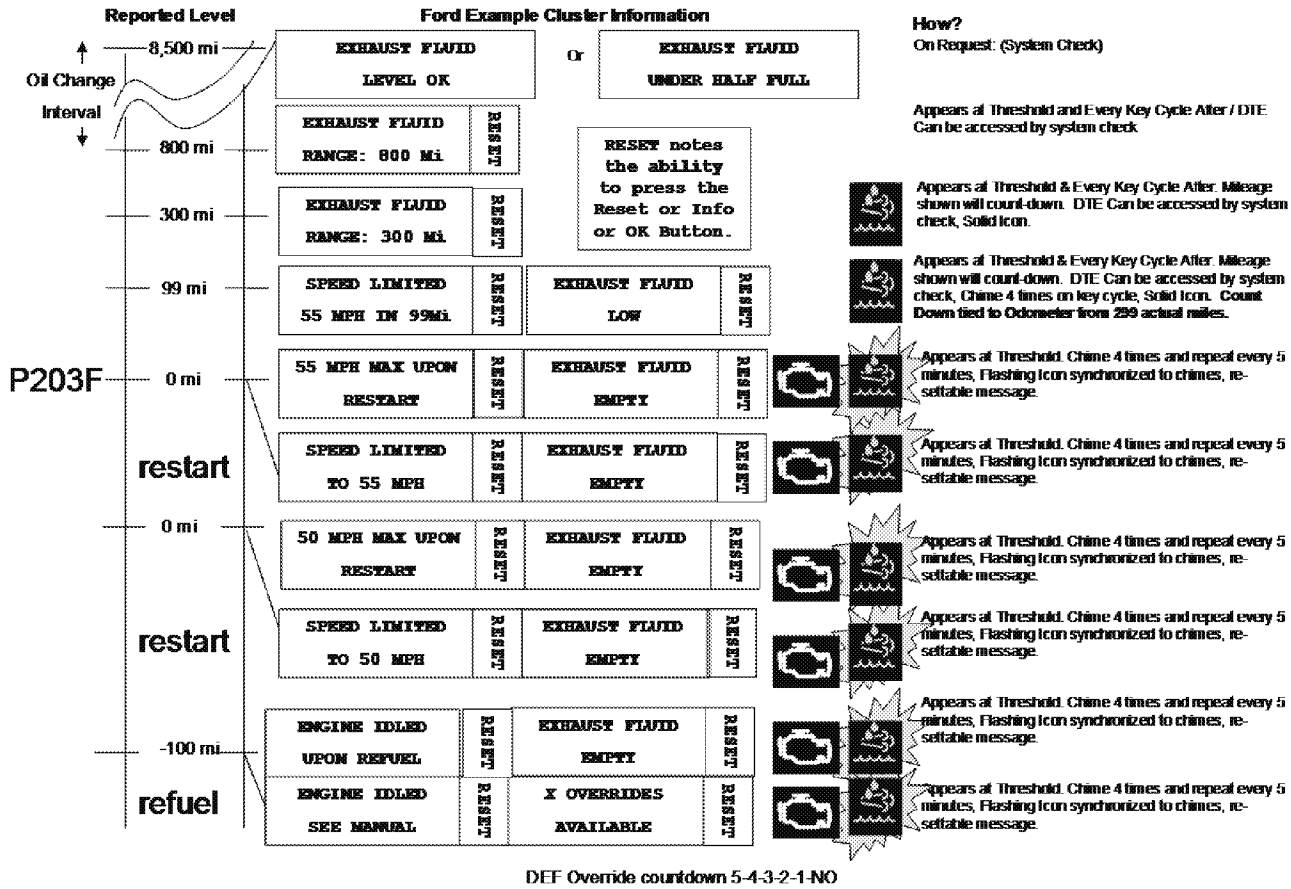

Monitor Summary:

ED_002078G_00001322-00477

DTCs	P203F - Reductant Level Too Low
Monitor execution	Continuous
Monitor Sequence	None
Sensors OK	DEF Temp-Level Combination Sensor

ED_002078G_00001322-00478

MISFIRE MONITOR

Misfire System Overview

The 6.7L Diesel engine utilizes a Hall Effect sensor (CKP) that processes the edges of a 60-2 tooth stamped target wheel mounted on the crankshaft. The software gets an edge every 3 degrees and these edges are used for fuel injection timing, fuel quantity control, and the calculation of engine speed. A software algorithm corrects for irregularities of the teeth of the target wheel to improve crankshaft signal resolution. A second Hall effect sensor is used to processes the edges of the three-lobed camshaft (CMP) target. The CMP signal and the window of 2 missing teeth on the crankshaft target wheel indicate proper camshaft to crankshaft position for correct cylinder timing.

Misfire Algorithm Processing

The Misfire Monitor divides two rotations of the crankshaft into 16 half-segments, each 45 degrees of crankshaft rotation. The crankshaft speed shows increases due to combustion of fuel in the cylinder followed by decreases due to friction and other forces between cylinder firing events. The location of the half-segments is chosen such that for each cylinder one half-segment contains the majority of the higher crankshaft speed values (the "high" half-segment) and the other half-segment the majority of the lower crankshaft speed values (the "low" half-segment). The range of crankshaft speed within each half-segment is averaged. The sum of the eight low half-segment speeds is subtracted from the sum of the eight high half-segment speeds and the result divided by eight to get an average increase in speed due to combustion. The Misfire Monitor then calculates the difference between the high and low half-segments for a specific cylinder combustion event and increments a misfire counter for the firing cylinder if this value is less than 20% of the average increase in speed due to combustion described above.

The Misfire Monitor collects blocks of data consisting of 20 crankshaft rotations. Upon achieving the correct entry conditions for the Misfire Monitor as described below, the first block of 20 rotations is discarded to ensure stable idle operation. All subsequent blocks of data are counted unless vehicle conditions change such that the entry conditions are no longer satisfied. In this case, any data in the current partial block are discarded, along with the data from the block immediately prior, as stable idle cannot be ensured for these data. The Misfire Monitor completes once 50 valid blocks (1000 crankshaft revolutions) have been collected, and a fault is reported if a cylinder shows 350 or more misfire events (out of 500 possible combustion events) in this time.

Certain engine operating parameters are monitored to ensure misfire operates in a region that yields accurate misfire results. The table below outlines the entry conditions required for executing the misfire monitor algorithm.

ED_002078G_00001322-00479

Misfire Monitor Operation:	
DTCs	P0300 – Random Misfire Detected P0301 – Cylinder 1 Misfire Detected P0302 – Cylinder 2 Misfire Detected P0303 – Cylinder 3 Misfire Detected P0304 – Cylinder 4 Misfire Detected P0305 – Cylinder 5 Misfire Detected P0306 – Cylinder 6 Misfire Detected P0307 – Cylinder 7 Misfire Detected P0308 – Cylinder 8 Misfire Detected
Monitor execution	Continuous, at idle
Monitor Sequence	None
Sensors OK	Engine Coolant Temperature (ECT), Vehicle Speed (VSS), Crankshaft Position Sensor (CKP) Injector Faults, Injector Bank Faults
Monitoring Duration	1000 revs

Typical Misfire Monitor Entry Conditions:		
Entry condition	Minimum	Maximum
Engine Speed (Idle)	500 rpm	1150 rpm
Engine Coolant Temperature (ECT)	-7 deg C	
Vehicle Speed (VSS)		<= 2 km/hr
Total fuel mass	2.0 mg/stroke	40.0 mg/stroke

Fuel System Overview

Fuel injection pressure is measured by the high-pressure fuel rail sensor (FRP). Injection pressure is controlled by the high pressure pump and two regulating valves, a Pressure Control Valve (PCV), and a Fuel Metering Unit (MeUn), formerly known as Volume Control Valve (VCV).

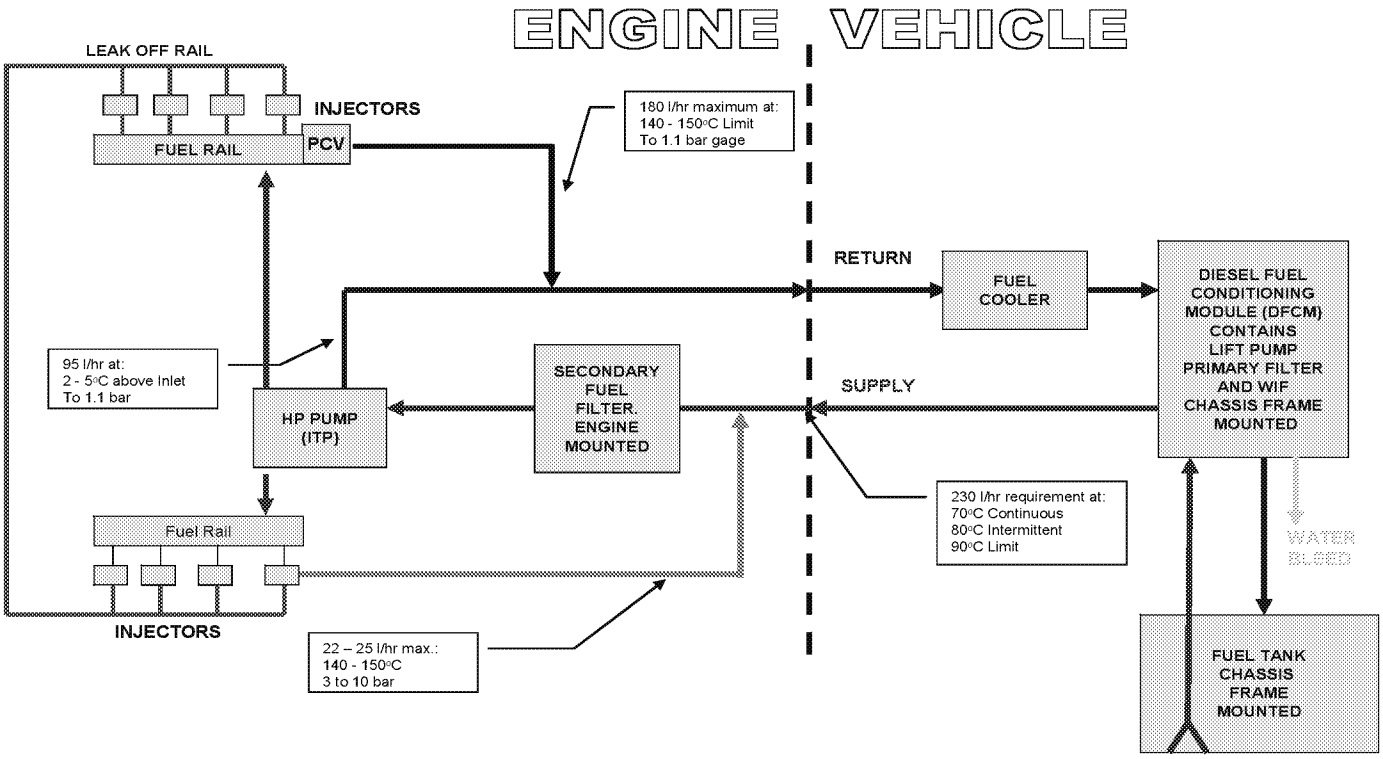

Fuel Rail Pressure Sensor Circuit Check

Fuel Rail Pressure (FRP) Sensor Circuit Check:	
DTCs	P0192 - Fuel Rail Pressure Sensor A Circuit Low Input P0193 - Fuel Rail Pressure Sensor A Circuit High Input
Monitor Execution	Continuous
Monitor Sequence	None
Sensors OK	Sensor Supply Voltage 1 OK (P06A6)
Typical Monitoring Duration	0.5 sec

Typical Fuel Rail Pressure Sensor Circuit Check Malfunction Thresholds:
FRP voltage < 0.13 V, or > 3.17 V

Fuel Rail Pressure (FRP) Rationality Check Operation:	
DTCs	P0191 - Fuel Rail Pressure Sensor "A" Circuit Range/Performance
Monitor Execution	Immediately Prior to Crank and After Key-off
Monitor Sequence	None
Sensors OK	Sensor Supply Voltage 1 OK (P06A6), FRP OK (P0192, P0193)
Typical Monitoring Duration	0.5 sec

Typical Fuel Rail Pressure Rationality Check Entry Conditions:		
Entry condition	Minimum	Maximum
Pre-crank: engine coolant temperature	-7 deg C	
Pre-crank: time engine off	600 sec	
After key-off: fuel temperature	-40 deg C	
After key-off: time since key off	12 sec	

Typical Fuel Rail Pressure Rationality Malfunction Thresholds:
FRP voltage < 0.251 V (-40 bar) or > 0.384 V (68 bar).

Fuel Rail Pressure Sensor Range Check:

When fuel rail pressure is controlled by the Pressure Control Valve, the Pressure Control Valve signal needed to maintain rail control is compared to an expected value. An adaptation factor for the Pressure Control Valve is calculated from the difference between observed and expected control values. Inaccuracy in the Rail Pressure Sensor Signal Slope is a potential cause of inaccuracy in the needed Pressure Control Valve signal along with physical errors in the PCV itself. If the adaptation factor required for the Pressure Control Valve exceeds a minimum or maximum control limit, then a code is set for rail pressure slope out of acceptable range.

Fuel Rail Pressure (FRP) Range Check Operation:	
DTCs	P016D - Excessive Time To Enter Closed Loop Fuel Pressure Control P228E - Fuel Pressure Regulator 1 Exceeded Learning Limits - Too Low P228F - Fuel Pressure Regulator 1 Exceeded Learning Limits - Too High
Monitor Execution	Continuous
Monitor Sequence	None
Sensors OK	Sensor Supply Voltage 1 (P06A6), FRP (P0192, P0193)
Typical Monitoring Duration	P016D – 30 sec, P228E, P228F - 10 sec

ED_002078G_00001322-00482

Typical Fuel Rail Pressure Range Check Entry Conditions:		
Entry condition	Minimum	Maximum
P016D:		
Requested rail pressure	500 bar	1200 bar
Change in requested rail pressure		30 sec
Fuel temperature		40 deg C
P228E, P228F:		
Rail pressure set point	500 bar	1200 bar
Fuel Temperature		40 deg C
Time since engine start		30 sec

Typical Fuel Rail Pressure Range Check Malfunction Thresholds:
P016D: If the system is within the adaptation operating conditions, but fails to learn a new adaptation factor after 30 seconds, this DTC is set. P228E, P228F: If the adaptation factor exceeds positive or negative thresholds which correspond to approximately a 20% deviation in the Rail Pressure Sensor slope, a DTC is set.

Fuel Temperature Sensor Circuit Check Operation:	
DTCs	P0181 – Fuel Temperature Sensor "A" Circuit Range/Performance P0182 – Fuel Temperature Sensor "A" Circuit Low P0183 – Fuel Temperature Sensor "A" Circuit High
Monitor Execution	Continuous
Monitor Sequence	None
Sensors OK	None
Typical Monitoring Duration	0.5 sec

Typical Fuel Temperature Sensor Circuit Check Entry Conditions:		
Entry condition	Minimum	Maximum
P0181:		
Engine Off Time	6 hours	

Typical Fuel Temperature Sensor Circuit Check Malfunction Thresholds:
P0181: If after an 6 hour engine off soak, the difference in temperature between the fuel temperature sensor and the charge air cooler outlet temperature sensor exceeds 40 deg C or if the difference in temperature between the fuel temperature sensor and the charge air cooler outlet temperature sensor exceeds 20 deg C and no active block heater is detected, a DTC is set FTS voltage < 0.0946 V (0.122.4 V = 150 deg C) or > 4.918 V (4.762 V = -40 deg C)

ED_002078G_00001322-00483

Volume Control Valve (VCV) Monitor Operation:	
DTCs	P0001 - Fuel Volume Regulator Control Circuit / Open P0002 - Fuel Volume Regulator Control Circuit Range/Performance P0003 - Fuel Volume Regulator Control Circuit Low P0004 - Fuel Volume Regulator Control Circuit High
Monitor Execution	Continuous
Monitor Sequence	None
Sensors OK	None
Typical Monitoring Duration	0.3 sec

Typical Volume Control Valve Monitor Malfunction Thresholds:
P0001 – If the volume control valve is not energized and the voltage from the volume control valve control chip is in the range 2.8 – 4.8 V (normal operation: 5V secondary voltage supply)
P0002 – Temperature of powerstage driver on ECM > 170 deg C
P0003 – If the volume control valve is not energized and the observed voltage from the volume control valve control chip is less than 2.8V (normal operation: 5V secondary voltage supply)
P0004 – If the volume control valve is energized and the current to the volume control valve exceeds 3.7A (normal operation: 2.2A maximum)

Fuel Pressure Control Valve (PCV) Monitor Operation:	
DTCs	P0089 - Fuel Pressure Regulator Performance P0090 - Fuel Pressure Regulator Control Circuit P0091 - Fuel Pressure Regulator Control Circuit Low P0092 - Fuel Pressure Regulator Control Circuit High
Monitor Execution	Continuous
Monitor Sequence	None
Sensors OK	None
Typical Monitoring Duration	0.3 sec

Typical Fuel Pressure Control Valve Monitor Malfunction Thresholds:
P0089 – Temperature of power stage driver on ECM is > 170 deg C
P0090 – The pressure control valve is not energized and the voltage from the pressure control valve control chip is in the range 2.8 – 4.8 V (normal operation: 5V secondary voltage supply)
P0091 – The pressure control valve is not energized and the voltage from the pressure control valve control chip is less than 2.8V (normal operation: 5V secondary voltage supply)
P0092 – The pressure control valve is energized and the observed current to the pressure control valve exceeds 5.1A (normal operation: 3.7A maximum)

Fuel Low Pressure Lift Pump Monitor Operation:	
DTCs	P0627 - Fuel Pump "A" Control Circuit / Open P0628 - Fuel Pump "A" Control Circuit Low P0629 - Fuel Pump "A" Control Circuit High P062A – Fuel Pump "A" Control Circuit Range/Performance
Monitor Execution	Continuous
Monitor Sequence	None
Sensors OK	None
Typical Monitoring Duration	P0627, P0628, P0629 - 0.2 sec P062A – 0.5 sec

Typical Fuel Low Pressure Lift Pump Monitor Malfunction Thresholds:
P0627 – Lift pump NOT energized and the voltage from the lift pump control chip is between 2.8 – 4.8V (normal operation: 5V secondary voltage supply)
P0628 – Lift pump NOT energized and the voltage from the lift pump control chip is less than 2.8V (normal operation: 5V secondary voltage supply)
P0629 – Lift pump energized and the current to the lift pump exceeds 3.7A (normal operation: 2.2A maximum)
P062A – If the airbag deployment module sends a deployment signal and the fuel pump shows as energized via the fuel pump monitor signal or the status of the energizing request to the fuel pump and the monitoring signal from the fuel pump does not match

Fuel Injector Driver Circuit Monitor Operation:	
DTCs	P062D - Fuel Injector Driver Circuit Performance Bank 1 P062E - Fuel Injector Driver Circuit Performance Bank 2 P1291 - Injector High Side Short To GND Or VBATT (Bank 1) P1292 - Injector High Side Short To GND Or VBATT (Bank 2)
Monitor Execution	Continuous
Monitor Sequence	None
Sensors OK	None
Typical Monitoring Duration	P062D, P062E – 0.5 seconds P1291, P1292 – 0.2 seconds

Typical Fuel Injector Driver Circuit Malfunction Thresholds:
P062D, P062E – Failure of injector driver of bank detected by IC Internal logic
P1291, P1292 – Short to ground or battery of bank detected by IC internal logic

ED_002078G_00001322-00485

Injection Circuits Monitor Operation:	
DTCs	P0201 - Injector Circuit / Open - Cylinder 1 P0202 - Injector Circuit / Open - Cylinder 2 P0203 - Injector Circuit / Open - Cylinder 3 P0204 - Injector Circuit / Open - Cylinder 4 P0205 - Injector Circuit / Open - Cylinder 5 P0206 - Injector Circuit / Open - Cylinder 6 P0207 - Injector Circuit / Open - Cylinder 7 P0208 - Injector Circuit / Open - Cylinder 8 P02EE – Cylinder 1 Injector Circuit Range/Performance P02EF – Cylinder 2 Injector Circuit Range/Performance P02F0 – Cylinder 3 Injector Circuit Range/Performance P02F1 – Cylinder 4 Injector Circuit Range/Performance P02F2 – Cylinder 5 Injector Circuit Range/Performance P02F3 – Cylinder 6 Injector Circuit Range/Performance P02F4 – Cylinder 7 Injector Circuit Range/Performance P02F5 – Cylinder 8 Injector Circuit Range/Performance P1201 – Cylinder #1 Injector Circuit Open/Shorted P1202 – Cylinder #2 Injector Circuit Open/Shorted P1203 – Cylinder #3 Injector Circuit Open/Shorted P1204 – Cylinder #4 Injector Circuit Open/Shorted P1205 – Cylinder #5 Injector Circuit Open/Shorted P1206 – Cylinder #6 Injector Circuit Open/Shorted P1207 – Cylinder #7 Injector Circuit Open/Shorted P1208 – Cylinder #8 Injector Circuit Open/Shorted P1261 – Cylinder #1 High To Low Side Short P1262 – Cylinder #2 High To Low Side Short P1263 – Cylinder #3 High To Low Side Short P1264 – Cylinder #4 High To Low Side Short P1265 – Cylinder #5 High To Low Side Short P1266 – Cylinder #6 High To Low Side Short P1267 – Cylinder #7 High To Low Side Short P1268 – Cylinder #8 High To Low Side Short
Monitor Execution	Continuous
Monitor Sequence	None
Sensors OK	None
Typical Monitoring Duration	P0201 – P0208 – 0.3 seconds. P02EE – P2F5 – 0.3 seconds. P1201 – P1208 – 0.3 seconds. P1261 – P1268 – 0.3 seconds.

Typical Injection Circuits Malfunction Thresholds:
P0201 – P0208 – Injector open circuit detected by IC internal logic P02EE – P02F5 – Implausible injector response detected by IC internal logic P1201 – P1208 – Injector short circuit detected by IC internal logic P1261 – P1268 – Injector high side to low side short circuit detected by IC internal logic

ED_002078G_00001322-00486

Injector Code Missing/Invalid:

Injector Code Monitor Operation:	
DTCs	P268C – Cylinder 1 Injector Data Incompatible P268D – Cylinder 2 Injector Data Incompatible P268E – Cylinder 3 Injector Data Incompatible P268F – Cylinder 4 Injector Data Incompatible P2690 – Cylinder 5 Injector Data Incompatible P2691 – Cylinder 6 Injector Data Incompatible P2692 – Cylinder 7 Injector Data Incompatible P2693 – Cylinder 8 Injector Data Incompatible
Monitor Execution	Continuous
Monitor Sequence	None
Sensors OK	None
Typical Monitoring Duration	0.5 seconds

Typical Injector Code Monitor Malfunction Thresholds:
P268C – P2693: Each injector has a code stored in EEPROM that provides information to the ECU about deviations of that injector from a theoretical average injector. If the injector code is missing or invalid, a DTC is set.

Fuel system pressure control:

Fuel Rail Pressure Monitors:

The pressure in the fuel rail is controlled by a closed-loop control strategy that is always active during vehicle operation. Two controllers may be used to control the rail pressure: the Pressure Control Valve and the Volume Control Valve. The Pressure Control Valve is used to control pressure at engine start and when fuel temperature is low. The Volume Control Valve is used to control fuel pressure under most other conditions. A third operation mode allows fuel rail pressure to be controlled by a combination of the Pressure Control Valve and Volume Control Valve; this mode is typically used to transition from control by one device to the other and in regimes where low fuel volume is required.

The fuel rail pressure is controlled either with the Pressure Control Valve, the Volume Control Valve, or both, depending upon engine operation condition. The high and low Fuel Rail Pressure Monitors detect when there is an excessive deviation from the desired fuel pressure when the controller has reached a control limit or when the minimum or maximum allowable rail pressures are exceeded.

ED_002078G_00001322-00487

Fuel Rail Pressure (FRP) Monitor Operation:	
DTCs	P0087 - Fuel Rail/System Pressure - Too Low P0088 - Fuel Rail/System Pressure – Too High P0093 – Fuel System Leak Detected – Large Leak
Monitor Execution	Continuous
Monitor Sequence	None
Sensors OK	FRP (P0191, P0192, P0193)
Typical Monitoring Duration	P0087, P0088 – 1.4 sec P0093 – 2 sec

Typical Fuel Rail Pressure Monitor Malfunction Thresholds:
P0087: If the commanded rail pressure exceeds the measured rail pressure by 250 bar for 1.4 sec or if the measured rail pressure drops below 140 bar for 0.3 sec
P0088: If the measured rail pressure exceeds the commanded rail pressure by 250 bar for 1.4 sec or if the measured rail pressure exceeds 2150 bar for 0.3 sec
P0093: If the set point needed for the volume control valve to maintain desired rail pressure exceeds 13,500 mm3/sec at idle or if the set point needed for the volume control valve to maintain desired rail pressure is 40% greater than the volume control valve set point as calculated from the requested injection quantity when not at idle

Injection Timing / Injection quantity

Zero Fuel Calibration:

Zero Fuel Calibration (ZFC) is an algorithm used to detect deviations in individual injector performance from nominal. In an overrun/decel fuel shut-off condition, fuel rail pressure is set to 300 bar and small injections are made from a single injector. The observed acceleration in crankshaft speed is detected and a regression line generated to predict the fueling required to achieve the expected acceleration. If the calculated fueling required to generate the expected acceleration in crankshaft speed falls outside the allowable control limits for the system, an addition routine is called to very precisely learn the adjustment to injector energizing time required to achieve expected acceleration. This information is then used to adjust all pilot injections on that injector to ensure correct fuel delivery. If the absolute energizing time observed for the test injection to yield the expected acceleration exceeds minimum or maximum limits, a code is set.

ED_002078G_00001322-00488

Zero Fuel Calibration (ZFC) Monitor Operation:	
DTCs	P02CC – Cylinder 1 Fuel Injector Offset Learning at Min Limit P02CD – Cylinder 1 Fuel Injector Offset Learning at Max Limit P02CE – Cylinder 2 Fuel Injector Offset Learning at Min Limit P02CF – Cylinder 2 Fuel Injector Offset Learning at Max Limit P02D0 – Cylinder 3 Fuel Injector Offset Learning at Min Limit P02D1 – Cylinder 3 Fuel Injector Offset Learning at Max Limit P02D2 – Cylinder 4 Fuel Injector Offset Learning at Min Limit P02D3 – Cylinder 4 Fuel Injector Offset Learning at Max Limit P02D4 – Cylinder 5 Fuel Injector Offset Learning at Min Limit P02D5 – Cylinder 5 Fuel Injector Offset Learning at Max Limit P02D6 – Cylinder 6 Fuel Injector Offset Learning at Min Limit P02D7 – Cylinder 6 Fuel Injector Offset Learning at Max Limit P02D8 – Cylinder 7 Fuel Injector Offset Learning at Min Limit P02D9 – Cylinder 7 Fuel Injector Offset Learning at Max Limit P02DA – Cylinder 8 Fuel Injector Offset Learning at Min Limit P02DB – Cylinder 8 Fuel Injector Offset Learning at Max Limit P262A – Fuel Injector – Pilot Injection Not Learned
Monitor Execution	Continuous
Monitor Sequence	None
Sensors OK	
Typical Monitoring Duration	P262A – 100 sec, all other DTCs 30 sec

Typical Zero Fuel Calibration (ZFC) Monitor Entry Conditions:		
Entry condition	Minimum	Maximum
P02CC, P02CD, P02CE, P02CF, P02D0, P02D1, P02D2, P02D3, P02D4, P02D5, P02D6, P02D7, P02D8, P02D9, P02DA, P02DB, P262A:		
Intake air temperature	0 deg C	
Fuel temperature	10 deg C	75 deg C
Engine coolant temperature	50 deg C	
System voltage	10 V	
Time in overrun/decel fuel shut-off		30 sec
Engine speed	890 rpm	1610 rpm
Boost pressure	750 mbar	
Accelerator pedal		2 %
Transmission gear (no gear change)	4 th	6 th
Torque converter locked		
Fuel Balance Control wheel learn complete		
Note: these are the entry conditions for the base function. The monitor runs whenever the base function runs.		

ED_002078G_00001322-00489

Typical Zero Fuel Calibration (ZFC) Monitor Malfunction Thresholds:
P02CC, P02CE, P02D0, P02D2, P02D4, P02D6, P02D8, P02DA: If the observed energizing time for the test injection is 156 us or more lower than the target 430 us energizing time for the given injector, the code is set. P02CD, P02CF, P02D1, P02D3, P02D5, P02D7, P02D9, P02DB: If the observed energizing time for the test injection is 254 us or more higher than the target 430 us energizing time for the given injector, the code is set. P262A: When the entry conditions described above are satisfied, if the system is unable to learn any data for pilot injection correction for 100 seconds, this code is set.

Fuel Mass Observer: (Global Fuel Bias)

Fuel Mass Observer (FMO) is an algorithm used to detect deviations in performance of all injectors from nominal. The oxygen percentage as measured by the tailpipe oxygen sensor is compared to a modeled oxygen percentage based upon current fuel, boost, and EGR settings. Deviation between the observed and modeled oxygen percentage is expressed in terms of the error in fueling required to explain the deviation. This calculated error in fueling is then divided by the current requested fueling level to generate a ratio of percentage error in fueling. This fueling ratio is then filtered over time. If the filtered error in fueling ratio exceeds minimum or maximum limits, then a code is set.

ED_002078G_00001322-00490

Fuel Mass Observer (FMO) Monitor Operation:	
DTCs	P016A - Excessive Time To Enter Closed Loop Air/Fuel Ratio Control P0170 – Fuel Trim (Bank 1)
Monitor Execution	Continuous
Monitor Sequence	None
Sensors OK	
Typical Monitoring Duration	P016A – 50 s; P0170 - 180 sec

Typical Fuel Mass Observer (FMO) Monitor Entry Conditions:		
Entry condition	Minimum	Maximum
Engine speed	1000 rpm	3000 rpm
Fuel injection quantity	20 mg/stroke	80 mg/stroke
Ambient pressure	700 hPa	
System voltage	9 V	
Ambient temperature	-5 C	
Tailpipe oxygen sensor status	Ready	
Post injection	Not occurring	

Typical Fuel Mass Observer (FMO) Monitor Malfunction Thresholds:
P016A – If above entry conditions are met and calculation of error in fueling due to difference between observed and modeled tailpipe oxygen concentration is not occurring, this fault is set P0170 : if the absolute value of the filtered ratio of error in fueling exceeds 0.19, this code is set.

Global Fuel Timing:

Errors in the control system that would result in a timing shift of the fuel injectors is diagnosed by looking at the cam to crank shaft alignment as discussed in the section for P0016.

Feedback control:

Fuel Balancing Control:

Fuel Balancing Control is an algorithm designed to reduce differences in injected fuel quantity from cylinder to cylinder. The increase in crankshaft speed due to individual cylinder combustion events is measured. The amount of fuel injected to each cylinder is then adjusted up or down to minimize the difference in increase in crankshaft speed from cylinder to cylinder. The total amount of fuel injected among all cylinders remains constant. The concept is shown in the graphic below.

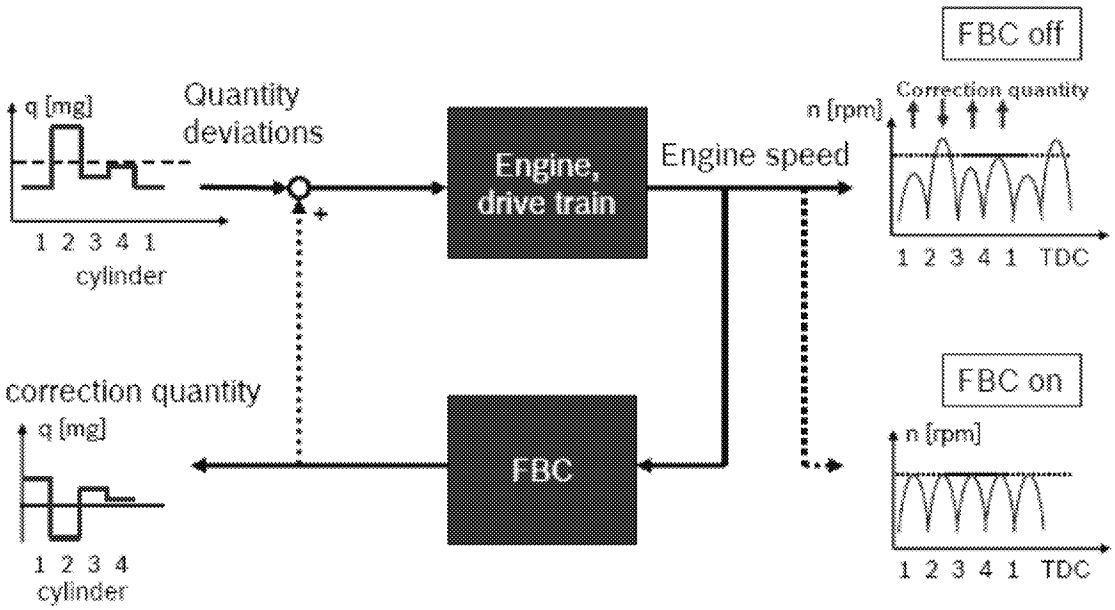

FBC operates in closed-loop control in an engine speed range of 500-3000 rpm, and a commanded injection quantity of 3.5 – 90 mg/stroke. The maximum allowed correction in fuel quantity for an individual cylinder is given by the following table.

ED_002078G_00001322-00492

Fuel Balancing Control (FBC) Control Limits:			
Injection quantity requested before FBC correction (mg/stroke)			
Maximum allowable FBC correction (mg/stroke):	3.5	7.5	15
	4	8	15

Fuel Balancing Control (FBC) Monitor Operation:	
DTCs	P0263 – Cylinder #1 Contribution/Balance P0266 – Cylinder #2 Contribution/Balance P0269 – Cylinder #3 Contribution/Balance P0272 – Cylinder #4 Contribution/Balance P0275 – Cylinder #5 Contribution/Balance P0278 – Cylinder #6 Contribution/Balance P0281 – Cylinder #7 Contribution/Balance P0284 – Cylinder #8 Contribution/Balance
Monitor Execution	continuous
Monitor Sequence	None
Sensors OK	CKP (P0335, P0336)
Typical Monitoring Duration	10 sec

Typical Fuel Balancing Control (FBC) Monitor Entry Conditions:		
Entry condition	Minimum	Maximum
P0263, P0266, P0269, P0272, P0275, P0278, P0281, P0284:		
Engine speed	500 rpm	3000 rpm
Injection quantity	3.5 mg/stroke	90 mg/stroke
Not In Regeneration		
FBC wheel learn complete		

Typical Fuel Balancing Control (FBC) Monitor Malfunction Thresholds:
If the current correction for the injector exceeds 90% of the allowable correction for current operation conditions, the code is set.

ED_002078G_00001322-00493

Nominal Voltage Calibration:

Nominal Voltage Calibration (NVC) is a series of closed-loop controllers on the charge/discharge profile of fuel injectors during an injection event. NVC is designed to compensate for changes due to aging of the piezo stack and hydraulic control elements within individual injectors and of the injector charging circuitry to maintain consistent operation of these components over the life of the injector. The injector charge/discharge profile is shown in the figure below.

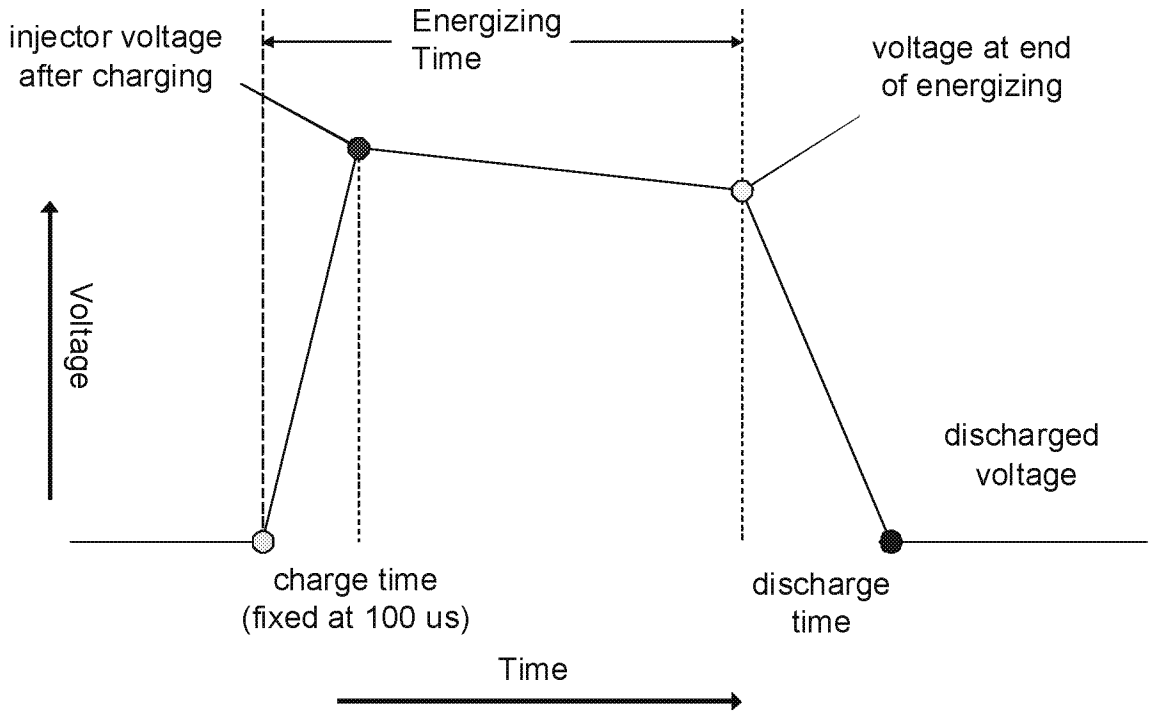

Nominal Voltage Calibration (NVC) Monitor Operation:	
DTCs	P1551 – Cylinder 1 Injector Circuit Range/Performance P1552 – Cylinder 2 Injector Circuit Range/Performance P1553 – Cylinder 3 Injector Circuit Range/Performance P1554 – Cylinder 4 Injector Circuit Range/Performance P1555 – Cylinder 5 Injector Circuit Range/Performance P1556 – Cylinder 6 Injector Circuit Range/Performance P1557 – Cylinder 7 Injector Circuit Range/Performance P1558 – Cylinder 8 Injector Circuit Range/Performance
Monitor Execution	continuous
Monitor Sequence	None
Sensors OK	Injector open circuit (P0201-0208), Injector performance (P02EE-02F5), Injector short circuit (P1201-1208), Injector high to low short (P1261-1268), ECT (P0117, P0118), RPS (P0191, P0192, P0193, P228E, P228F)
Typical Monitoring Duration	2 sec (set point voltage), 90 sec (other two tests)

ED_002078G_00001322-00494

Typical Nominal Voltage Calibration (NVC) Monitor Entry Conditions:		
Entry condition	Minimum	Maximum
Rail pressure	1200 bar	1600 bar
Engine coolant temperature	70 deg C	100 deg C
Injection duration	300 us	
Single pilot-main injection profile		

Typical Nominal Voltage Calibration (NVC) Monitor Malfunction Thresholds:
If the set point voltage at end of energizing (yellow dot in figure) exceeds the allowable voltage given in the chart below for the current rail pressure set point or if there exists a persistent deviation between set and measured discharge time (yellow dot to blue dot in figure) or if there exists a persistent deviation between the set and measured voltage at end of energizing (yellow dot in figure)

Maximum Allowable Voltage At End of Energizing :				
Rail pressure (bar)	300	800	1200	2000
Maximum allowed voltage (V)	89	91	93	108

ED_002078G_00001322-00495

Air-Fuel Ratio Sensors: Feedgas NOx Sensor Control Module

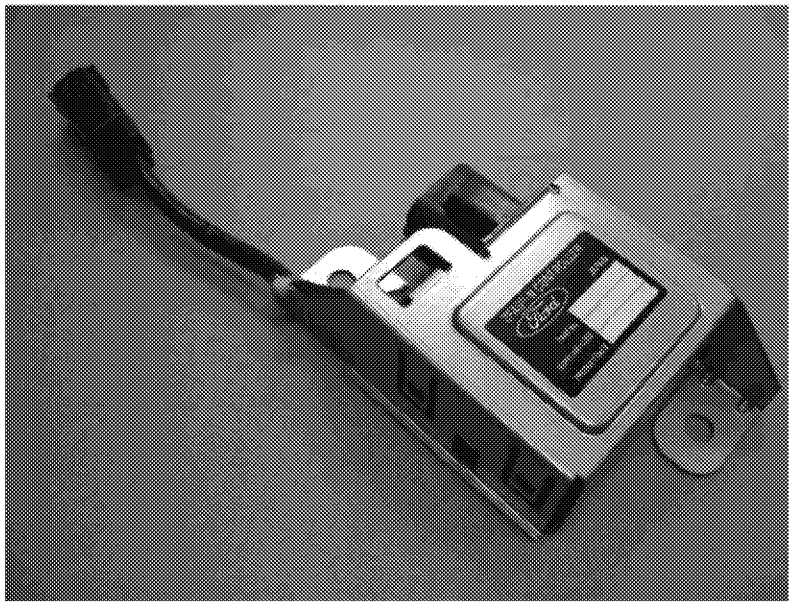

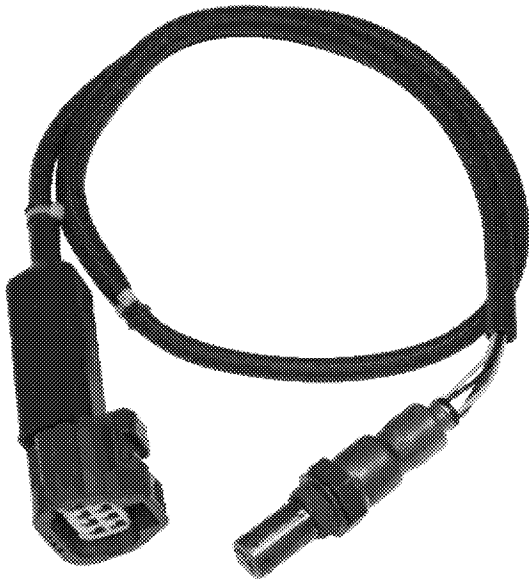

The NOx controller module is mounted to the vehicle frame under the body. It is used to control the feed gas NOx sensor mounted in diesel after-treatment exhaust system upstream of the SCR and DPF on a Chassis Certified Vehicle and upstream of the SCR only on a Dynamometer Certified Vehicle. It communicates to the ECU via HSCAN to report NOx concentrations or OBDII errors.

ED_002078G_00001322-00496

The controller module consists of RAM, ROM, EEPROM, Ip1 circuit, Ip2 circuit, Rpvs circuit, heater driver, microprocessor, and temperature sensor. The RAM temporarily stores information obtained from the sensing element during operation. The ROM and EEPROM store sensor and controller module calibration coefficients obtained during the manufacturing process. The Ip2 circuit adjusts the pumping current in the sensing element's Ip2 circuit for NOx detection. The Ip2 circuit consists of 2 bands: a wide range and a narrow range. The Rpvs circuit is a measurement of the resistance of the Vs cell of the sensor element. This measurement is used to estimate the temperature of the sensing element. The heater driver supplies a PWM voltage to the heater portion of the sensing element to maintain the element's target operational temperature. PID feedback from Rpvs is used to control and maintain the element temperature. The microprocessor processes all of the inputs from the sensing element and outputs to the CAN circuit. The temperature sensor in the controller module is used for compensating the temperature dependency of circuit components and for OBD rationality checks.

The NOx controller module interfaces with the vehicle via a power source, signal ground, power ground, CAN-H and CAN-L. The compensated NOx concentration; Rpvs, pressure compensation factors, sensor/module OBD (including monitor completion flags), module temperature, software ID, CALID, and CVN are communicated via HSCAN to the vehicle PCM.

NOx Controller Module Malfunctions	
DTCs	P06EA NOx Sensor Processor Performance (Bank 1 Sensor 1) U05A1 NOx Sensor "A" Received Invalid Data From ECM/PCM P225A NOx Sensor Calibration Memory (Bank 1 Sensor 1)
Monitor execution	Continuous
Monitor Sequence	Ip2-N and Ip2-W range rationality – 50ppm < [NOx] < 100ppm
Sensors OK	not applicable
Monitoring Duration	5 seconds to register a malfunction

Typical NOx Controller Malfunction Thresholds
P06EA RAM failure ROM CRC check error EEPROM CRC check error Ip1 out of range – Ip1(VIP2.1) < 1.8V, Ip1(VIP2.1) > 2.2V, Ip1(VIP2.2) < 0.2V, or Ip1(VIP2.2) > 0.6V Ip2-W out of range – Vs+ ≥ 5.35V and Ip2-W > 4.8V Ip2-N out of range – Vs+ ≥ 5.35V and Ip2-N < 0.2V Ip2-N and Ip2-W range rationality – Integral value of differential between Ip2-N & Ip2-W ≥ 250ppm Vp2 circuit failure – Vp2 < 250mV or Vp2 > 650mV Rpvs short to ground – Rpvs < 0.2V Temperature sensor short to battery – Temp > 4.5V Temperature sensor short to ground – Temp < 0.45V Temperature sensor open – 0.45V ≤ Temp < 0.48V NOx Module temperature within 40 deg. C of Exhaust Temperature Sensor on Cold Start
U05A1 Erroneous Signal (Dew point reached with ignition off, etc.) Timeout (>1 second before message received)
P225A Memory does not pass CRC check

ED_002078G_00001322-00497

The NOx sensor is primarily used to sense NOx concentrations in diesel exhaust gas. The sensor is mounted in a vehicle's exhaust pipe, perpendicular to exhaust gas flow. The sensor is typically mounted, in an aftertreatment-equipped diesel exhaust system, upstream of the SCR and DPF on a Chassis Certified Vehicle and upstream of the SCR only on a Dynamometer Certified Vehicle. The sensor interfaces to a NOx controller module that controls the sensor element's sense circuit and heater.

The Ip2 (NOx concentration) measurement takes place in a 2nd measurement chamber. Exhaust gas passes from the 1st measurement chamber through a 2nd diffusion barrier into the 2nd measurement chamber. The NOx present in the 2nd measurement chamber is dissociated into N2 and O2. The excess O2 is pumped out of the 2nd measurement chamber by the pumping current, Ip2. Ip2 is proportional to the NOx concentration in the measured gas.

The NOx sensor is equipped with a memory component which stores unique sensor characteristics used to compensate for part-to-part variation of the element during the manufacturing process. The memory stores Ip1 and Ip2 gains/offsets for each individual sensor.

The NOx sensor interfaces the NOx controller module with the following:

Ip2 – pumping current for pumping out dissociated O2 from 2nd chamber
COM – virtual ground for Vs, Ip1, and Ip2 circuits
Vs – Nernst cell voltage, 425mV from COM. Also carries current for pumped reference.
TM – Touch memory which stores Ip1 and Ip2 gain/offset.
TM GND – Ground for touch memory reading
H+ – Heater voltage (High-side driver) – Duty cycle ON/OFF to control sensor temperature.
H- – Heater ground side

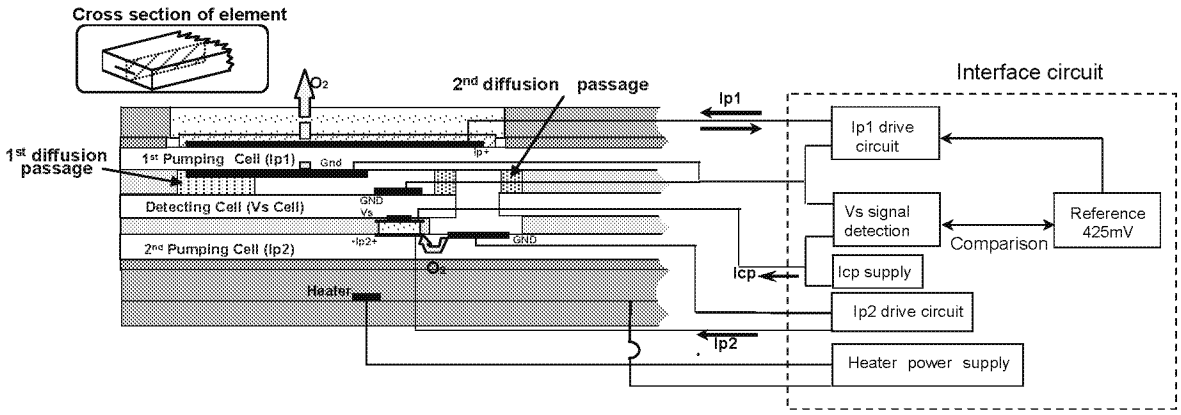

IP2 Open (FLO) OBD Algorithm

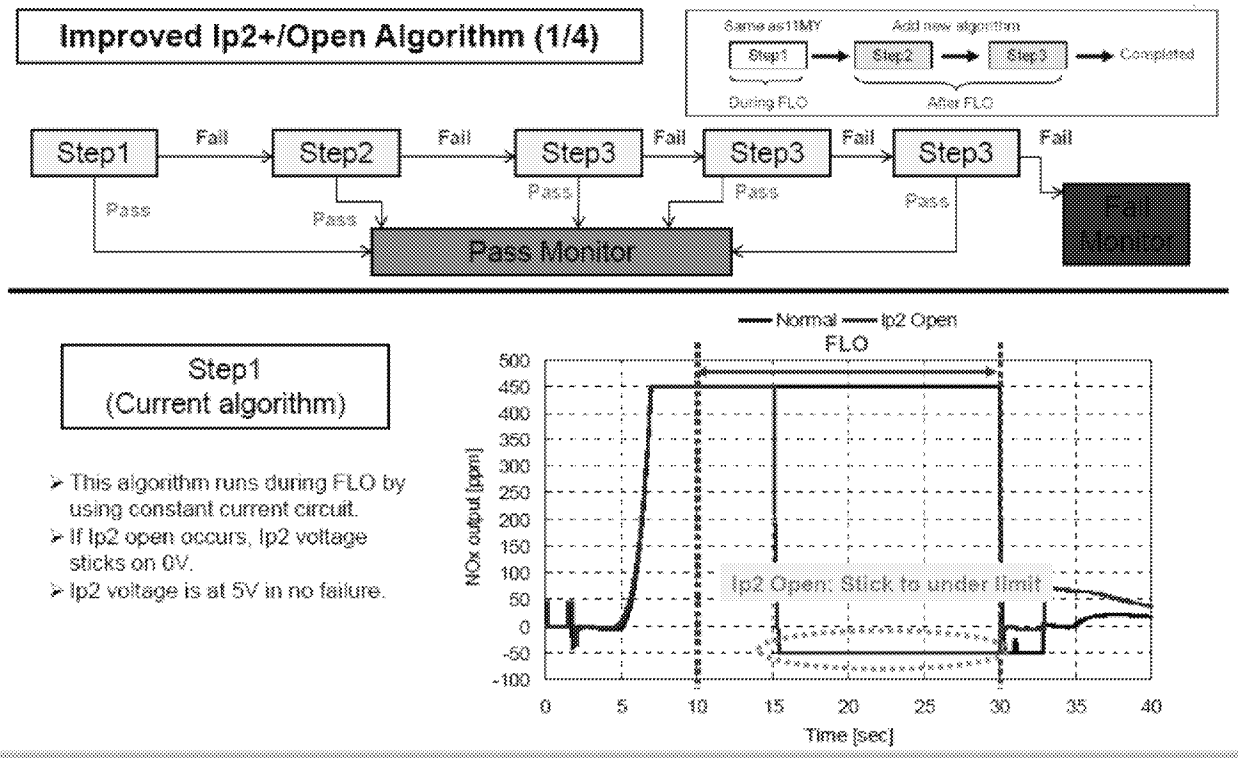

IP2 Open (FLO) OBD Algorithm

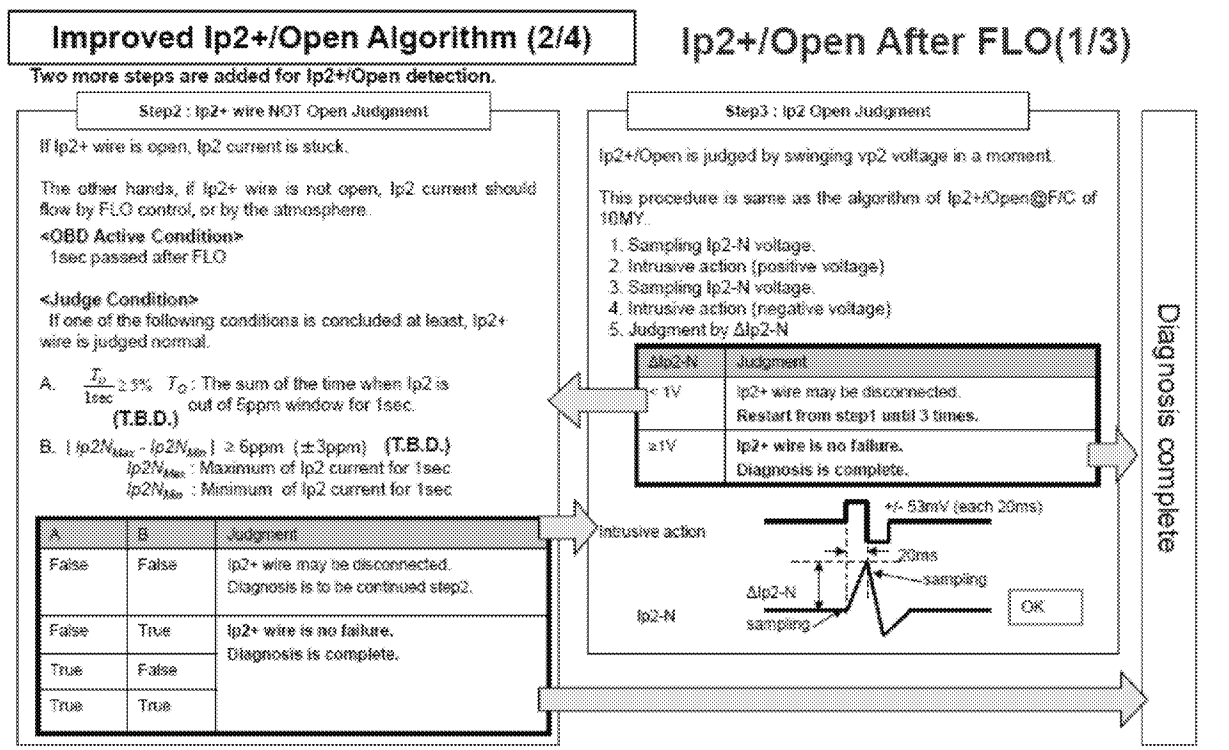

The Feed Gas Low NOx Plausibility Monitor runs once per drive cycle during an intrusive EGR shutoff, in which the calculated NOx value (using fuel quantity, temperature and ambient pressure) is then compared to the threshold.

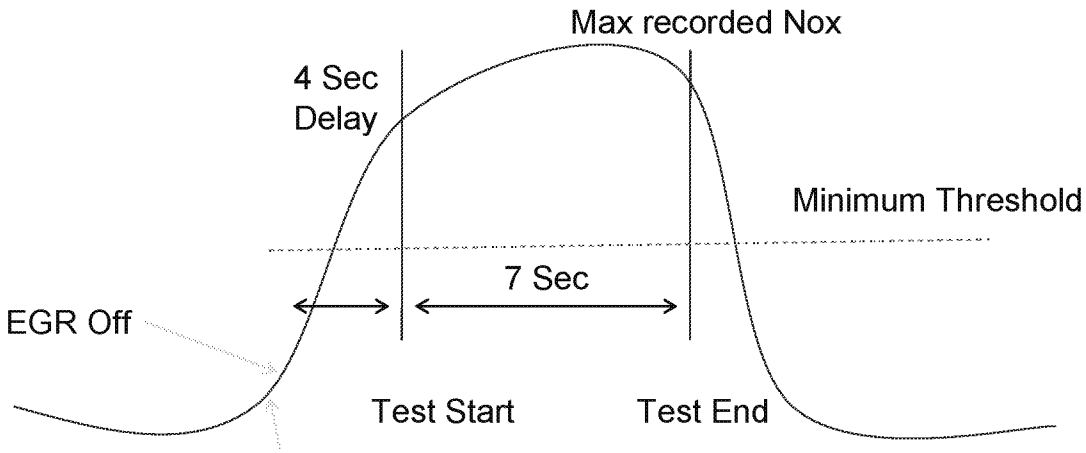

FG NOx Plausibility Monitor	
DTCs	P2201 - NOx Sensor Circuit Range/Performance (Bank 1 Sensor 1)
Monitor execution	Once a drive cycle
Monitor Sequence	When EGR is disabled at idle, for air mass adaptation, the monitor runs.
Sensors OK	Nox Sensor, EGR system
Monitoring Duration	11 seconds to register a malfunction

Typical Nominal FG Nox Plausibility Monitor Entry Conditions:		
Entry condition	Minimum	Maximum
Pedal Position		0%
Fuel	7 mg/stroke	15 mg/stroke
Engine Coolant	70C	
Fuel Cut Duration before test	1.5 sec.	

Typical NOx Controller Malfunction Thresholds
Measured maximum nox is less than 50% of expected.

ED_002078G_00001322-00500

NOx Sensor Malfunctions	
DTCs	P2200 NOx Sensor Circuit (Bank 1 Sensor 1) P2201 NOx Sensor Circuit Range/Performance (Bank 1 Sensor 1) P220E NOx Sensor Heater Control Circuit Range/Performance (Bank 1 Sensor 1) P2209 NOx Sensor Heater Sense Circuit Range/Performance (Bank 1 Sensor 1) P220A NOx Sensor Supply Voltage Circuit (Bank 1 Sensor 1)
Monitor execution	continuous
Monitor Sequence	Ip2 Open – O2 ≥ 5% or F/C > 3 seconds and O2 ≥ 19% Ip2 Crack – F/C > 5 seconds and O2 ≥ 19%
Sensors OK	not applicable

Typical NOx Sensor Malfunctions Thresholds

P2200 Vs, COM, Ip1 short to battery – ASIC Diag2=1 and Vs, COM, Ip1 ≥ 9V
Ip2 short to battery – Ip2 ≥ 4.8V
Vs, COM, Ip1 short to ground – ASIC Diag2=1 and Vs, COM, Ip1 < 9V
Ip2 short to ground – Ip2 ≤ 2V
Ip1 Open – Vs ≤ 225mV, Vs ≥ 625mV & -0.2mA ≤ Ip1 ≤ 0.2mA
Vs Open – Vs > 1.5V
COM Open – Rpvs > RpvsA (target Rpvs stored in sensor memory) or ASIC Diag1=1
Ip2 Open – Ip2-W ≤ 0.2V and Ip2-N ≤ 0.2V
Sensor Memory CRC check
Vs/Ip1 Cell Crack – Ip1 > 6.4mA
Ip2 Cell Crack – Ip2-W > 4.8V

P2201 NOx Sensor reading 50% Lower than expected (low threshold) during EGR Off
NOx Negative Offset – Nox Sensor greater than ~ - 20 ppm offset
NOx Positive Offset – Nox Sensor greater than ~50 ppm offset

P220E Heater control failure – Rpvs ≥ 0.2V and Rpvs < TRpvs - 30Ω or Rpvs > TRpvs + 30Ω
Heater Open – Heater current < 0.4A
Heater short to battery – Δ Heater Voltage > 0.2V
Heater short to ground – Δ Heater Voltage > 0.2V
Heater performance failure – Heater current ≥ 0.4A and Heater Resistance ≥ 11Ω

P2209 NOx Availability – > 1 PL (Healing mode) per cycle or > 9 sec of NOx not valid

P220A Battery failure – Battery > 17V or Battery < 10V

ED_002078G_00001322-00501

NOx Sensor Operation Modes

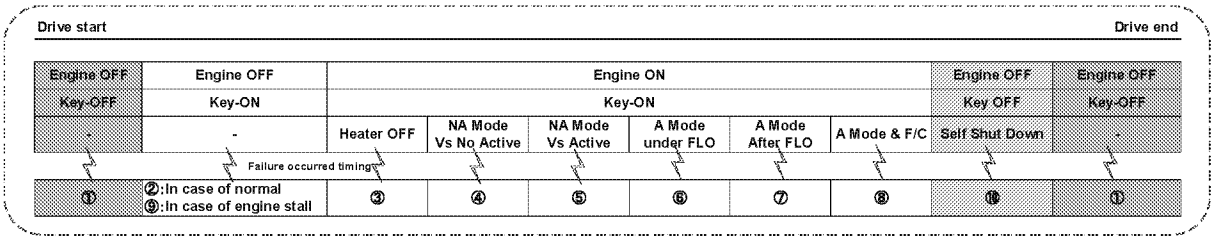

Mode 1 – No voltage supply to module or sensor. Non-operational.
Mode 2 – Voltage is supplied to module, yet voltage is not supplied to the sensor.
Mode 3 – Voltage is supplied to module, yet voltage is not supplied to the sensor. Dew-point waiting period.
Mode 4 – Voltage is supplied to the module and to the sensor. The Vs cell of the sensor is not active.
Mode 5 – Voltage is supplied to the module and to the sensor. The Vs cell of the sensor is active.
Mode 6 – Voltage is supplied to the module and to the sensor. Sensor is in fast light-off to quickly heat sensing element to operational temperature.
Mode 7 – Voltage is supplied to the module and to the sensor. The sensor has exited fast light-off and O2 and NOx will be available during this mode.
Mode 8 - Voltage is supplied to the module and to the sensor. The sensor has exited fast light-off and O2 and NOx will be available during this mode. During this mode a fuel cut condition is present, as communicated by the PCM.
Mode 9 - Voltage is supplied to module, yet voltage is not supplied to the sensor.
Mode 10 - No voltage supply to module or sensor. Non-operational.

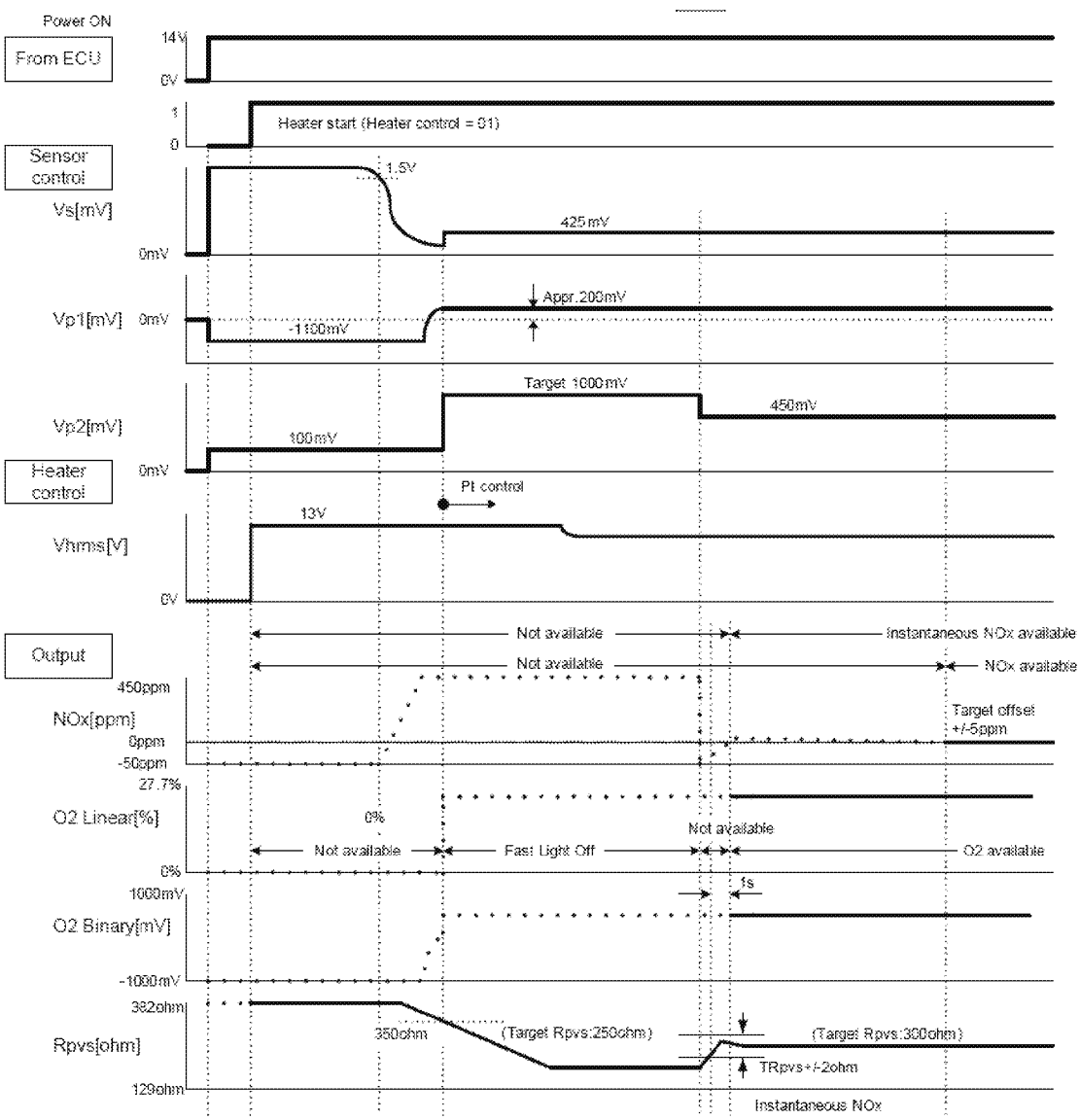

Air-Fuel Ratio Sensors: Tailpipe NOx and O2 Sensor Control Module

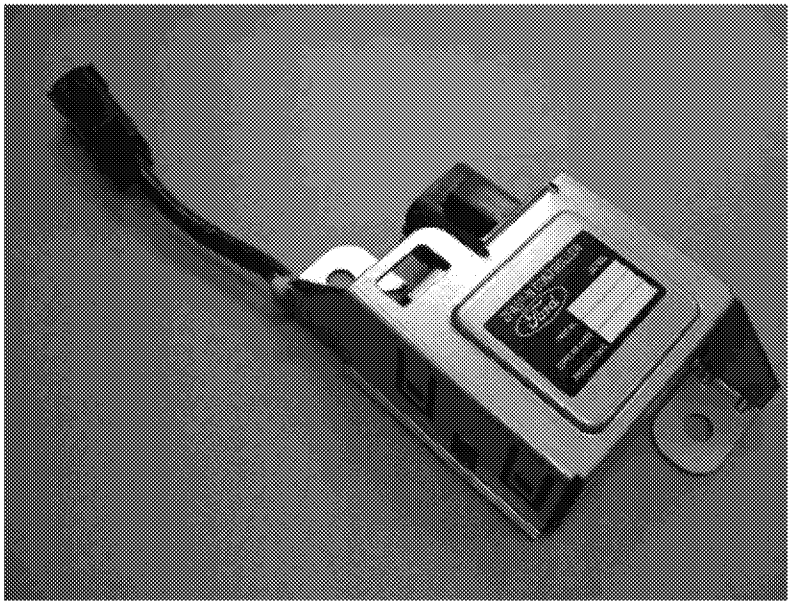

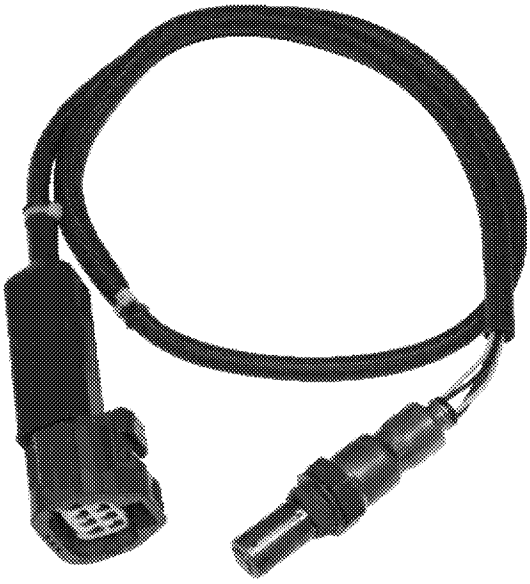

The NOx controller module is mounted to the vehicle frame under the body. It is used to control the combination tailpipe NOx and O2 sensor mounted in diesel after-treatment exhaust system downstream of the SCR and DPF. It communicates to the ECU via HSCAN to report NOx and O2 concentrations or OBDII errors.

ED_002078G_00001322-00503

The controller module consists of RAM, ROM, EEPROM, Ip1 circuit, Ip2 circuit, Rpvs circuit, heater driver, microprocessor, and temperature sensor. The RAM temporarily stores information obtained from the sensing element during operation. The ROM and EEPROM store sensor and controller module calibration coefficients obtained during the manufacturing process. The Ip1 circuit consists of an ASIC (like that of a UEGO ASIC) that adjusts pumping current in the sensing element's Ip1 circuit for O2 detection. The Ip2 circuit adjusts the pumping current in the sensing element's Ip2 circuit for NOx detection. The Ip2 circuit consists of 2 bands: a wide range and a narrow range. The Rpvs circuit is a measurement of the resistance of the Vs cell of the sensor element. This measurement is used to estimate the temperature of the sensing element. The heater driver supplies a PWM voltage to the heater portion of the sensing element to maintain the element's target operational temperature. PID feedback from Rpvs is used to control and maintain the element temperature. The microprocessor processes all of the inputs from the sensing element and outputs to the CAN circuit. The temperature sensor in the controller module is used for compensating the temperature dependency of circuit components and for OBD rationality checks.

The NOx controller module interfaces with the vehicle via a power source, signal ground, power ground, CAN-H and CAN-L. The compensated O2 concentration compensated NOx concentration; Rpvs, pressure compensation factors, sensor/module OBD (including monitor completion flags), module temperature, software ID, CALID, and CVN are communicated via HSCAN to the vehicle PCM.

NOx Controller Module Malfunctions	
DTCs	P06EB NOx Sensor Processor Performance (Bank 1 Sensor 2) U05A2 NOx Sensor "B" Received Invalid Data From ECM/PCM P225B NOx Sensor Calibration Memory (Bank 1 Sensor 2)
Monitor execution	Continuous
Monitor Sequence	Ip2-N and Ip2-W range rationality – 50ppm < [NOx] < 100ppm
Sensors OK	not applicable
Monitoring Duration	5 seconds to register a malfunction

Typical NOx Controller Malfunction Thresholds
P06EB RAM failure ROM CRC check error EEPROM CRC check error Ip1 out of range – Ip1(VIP2.1) < 1.8V, Ip1(VIP2.1) > 2.2V, Ip1(VIP2.2) < 0.2V, or Ip1(VIP2.2) > 0.6V Ip2-W out of range – Vs+ ≥ 5.35V and Ip2-W > 4.8V Ip2-N out of range – Vs+ ≥ 5.35V and Ip2-N < 0.2V Ip2-N and Ip2-W range rationality – Integral value of differential between Ip2-N & Ip2-W ≥ 250ppm Vp2 circuit failure – Vp2 < 250mV or Vp2 > 650mV Rpvs short to ground – Rpvs < 0.2V Temperature sensor short to battery – Temp > 4.5V Temperature sensor short to ground – Temp < 0.45V

ED_002078G_00001322-00504

	Temperature sensor open – 0.45V ≤ Temp < 0.48V
	NOx Module temperature within 40 deg. C of Exhaust Temperature Sensor on Cold Start
U05A2	Erroneous Signal (Dew point reached with ignition off, etc.) Timeout (>1 second before message received)
P225B	Memory does not pass CRC check

The NOx sensor is primarily used to sense O2 and NOx concentrations in diesel exhaust gas. The sensor is mounted in a vehicle's tailpipe, perpendicular to exhaust gas flow. The sensor is typically mounted downstream of an SCR and DPF in an aftertreatment-equipped diesel exhaust system. The sensor interfaces to a NOx controller module that controls the sensor element's sense circuit and heater.

The NOx Sensor operates similarly to a UEGO sensor for measuring Ip1 (O2 concentration). Exhaust gas enters through a diffusion barrier into the 1st measurement chamber. The sensor infers an air fuel ratio relative to the stoichiometric (chemically balanced) air fuel ratio by balancing the amount of oxygen pumped in or out of the 1st measurement chamber. As the exhaust gasses get richer or leaner, the amount of oxygen that must be pumped in or out to maintain a stoichiometric air fuel ratio in the 1st measurement chamber varies in proportion to the air fuel ratio. By measuring the current required to pump the oxygen in or out, the O2 concentration can be estimated.

The Ip2 (NOx concentration) measurement takes place in a 2nd measurement chamber. Exhaust gas passes from the 1st measurement chamber through a 2nd diffusion barrier into the 2nd measurement chamber. The NOx present in the 2nd measurement chamber is dissociated into N2 and O2. The excess O2 is pumped out of the 2nd measurement chamber by the pumping current, Ip2. Ip2 is proportional to the NOx concentration in the measured gas.

The NOx sensor is equipped with a memory component which stores unique sensor characteristics used to compensate for part-to-part variation of the element during the manufacturing process. The memory stores Ip1 and Ip2 gains/offsets for each individual sensor.

The NOx sensor interfaces the NOx controller module with the following:

Ip1 – pumping current for maintaining the A/F ratio in the 1st chamber
Ip2 – pumping current for pumping out dissociated O2 from 2nd chamber
COM – virtual ground for Vs, Ip1, and Ip2 circuits
Vs – Nernst cell voltage, 425mV from COM. Also carries current for pumped reference.
TM – Touch memory which stores Ip1 and Ip2 gain/offset.
TM GND – Ground for touch memory reading
H+ – Heater voltage (High-side driver) – Duty cycle ON/OFF to control sensor temperature.
H- – Heater ground side

ED_002078G_00001322-00505

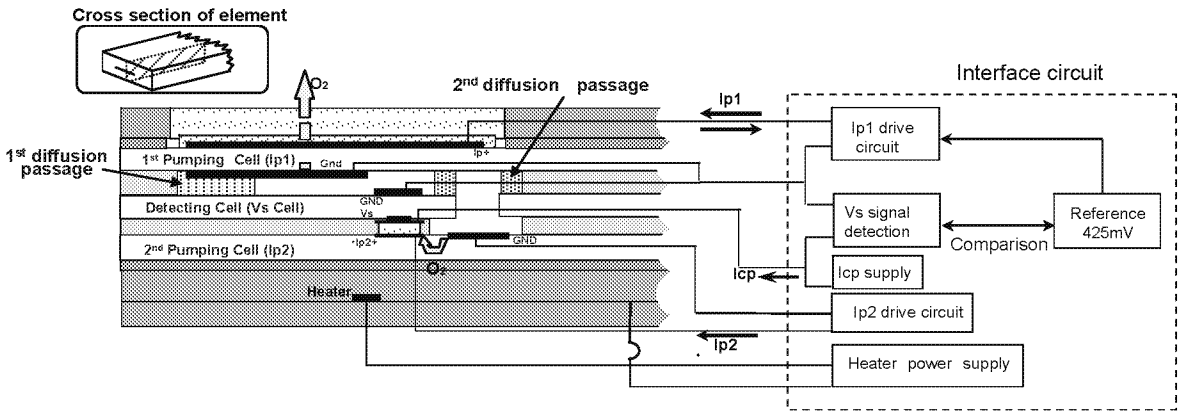

IP2 Open (FLO) OBD Algorithm

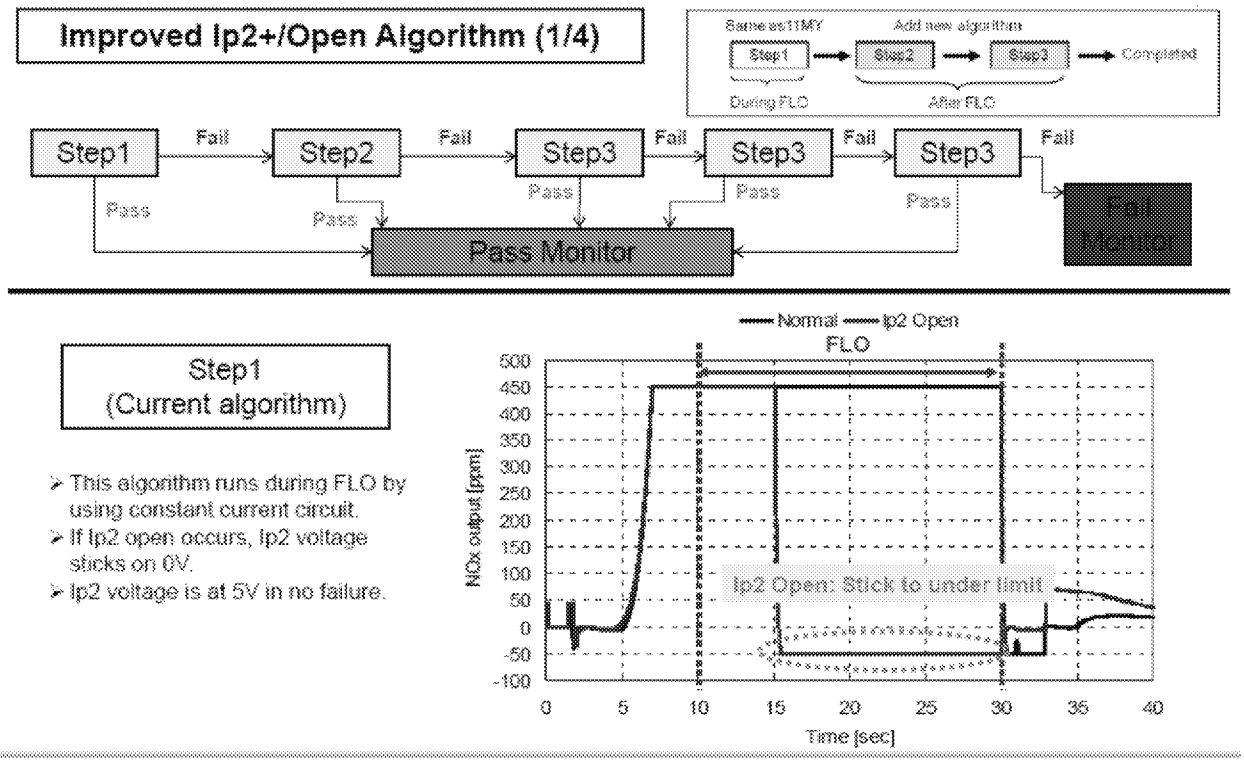

IP2 Open (FLO) OBD Algorithm

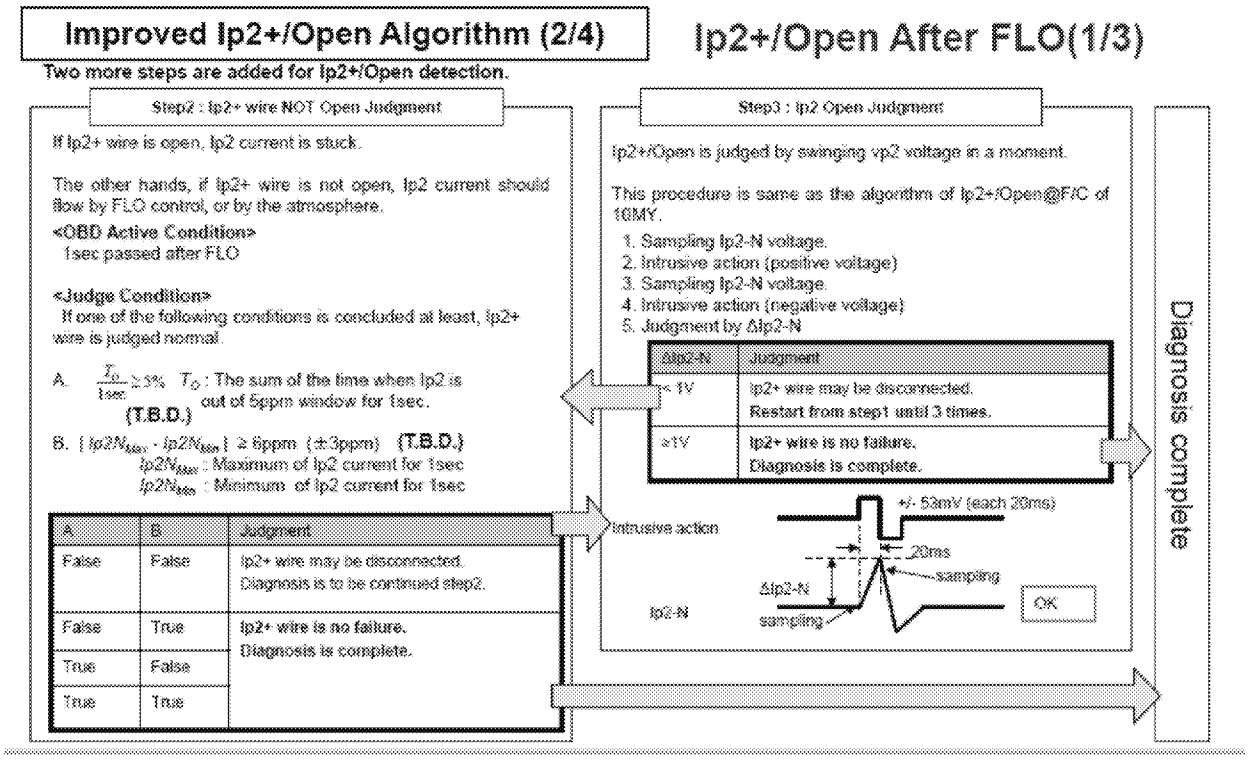

NOx – O2 Sensor Malfunctions	
DTCs	P0139 O2 Sensor Circuit Slow Response (Bank 1 Sensor 2) P0140 O2 Sensor Circuit No Activity Detected (Bank 1 Sensor 2) P2A01 O2 Sensor Circuit Range/Performance (Bank 1 Sensor 2) P229E NOx Sensor Circuit (Bank 1 Sensor 2) P229F NOx Sensor Circuit Range/Performance (Bank 1 Sensor 2) P220F NOx Sensor Heater Control Circuit Range/Performance (Bank 1 Sensor 2) P22A7 NOx Sensor Heater Sense Circuit Range/Performance (Bank 1 Sensor 2) P220B NOx Sensor Supply Voltage Circuit (Bank 1 Sensor 2)
Monitor execution	Continuous
Monitor Sequence	Ip2 Open – 02 ≥ 5% or F/C > 3 seconds and O2 ≥ 19% Ip2 Crack – F/C > 5 seconds and O2 ≥ 19%
Sensors OK	not applicable

Typical NOx – O2 Sensor Malfunctions Thresholds
P0139 As shown in figure below, during a transition from load to overrun/decel fuel shutoff, one of the following occurs: The time for the observed O2 percentage to increase from the value under load by 30% of (21%-O2 percentage under load) exceeds 6 seconds OR The time for the observed O2 percentage to increase from the value under load + 30% of the

difference to the value under load + 60% of the difference exceeds 5 seconds
OR

The time for the observed O2 percentage to increase from the value under load to the value under load + 60% of the difference exceeds 11 seconds. (Used to detect completely inert sensors.)

(monitor operates when the vehicle is not undergoing particulate filter regeneration)

P0140 If there is no available O2 signal at 300 seconds after the sensor has achieved operating temperature

P2A01 A calculated oxygen concentration is derived from fuel, boost, and EGR. Observed oxygen concentration is evaluated within two speed/load/air mass ranges. Code is set if observed oxygen concentration falls outside the range ((calculated O2 concentration – negative offset, calculated O2 concentration + positive offset). Ranges and allowable O2 concentration deviations are given in the table below.
OR

In an extended overrun/decel fuel shutoff condition, an adaption factor is calculated for the response of the O2 sensor to ensure that the sensor reads 20.95% O2 in air. Code is set if adaption factor is outside the range 0.95 – 1.22.

(monitor operates when the vehicle is not undergoing particulate filter regeneration)

P229E Vs, COM, Ip1 short to battery – ASIC Diag2=1 and Vs, COM, Ip1 ≥ 9V
Ip2 short to battery – Ip2 ≥ 4.8V
Vs, COM, Ip1 short to ground – ASIC Diag2=1 and Vs, COM, Ip1 < 9V
Ip2 short to ground – Ip2 ≤ 2V
Ip1 Open – Vs ≤ 225mV, Vs ≥ 625mV & -0.2mA ≤ Ip1 ≤ 0.2mA
Vs Open – Vs > 1.5V
COM Open – Rpvs > RpvsA (target Rpvs stored in sensor memory) or ASIC Diag1=1
Ip2 Open – Ip2-W ≤ 0.2V and Ip2-N ≤ 0.2V
Sensor Memory CRC check
Vs/Ip1 Cell Crack – Ip1 > 6.4mA
Ip2 Cell Crack – Ip2-W > 4.8V

P229F NOx Negative Offset – Nox Sensor greater than ~ - 10 ppm offset
NOx Positive Offset – Nox Sensor greater than ~20 ppm offset
Tip-in – Filtered tailpipe Nox on tip-in delta > 0 ppm

P220F Heater control failure – Rpvs ≥ 0.2V and Rpvs < TRpvs - 30Ω or Rpvs > TRpvs + 30Ω
Heater Open – Heater current < 0.4A
Heater short to battery – Δ Heater Voltage > 0.2V
Heater short to ground – Δ Heater Voltage > 0.2V
Heater performance failure – Heater current ≥ 0.4A and Heater Resistance ≥ 11Ω

P22A7 NOx/O2 Availability – > 1 PL (Healing mode) per cycle or > 9 sec of Nox/O2 not valid

P220B Battery failure – Battery > 17V or Battery < 10V

ED_002078G_00001322-00508

P0133 (O2 slow response) monitor operation

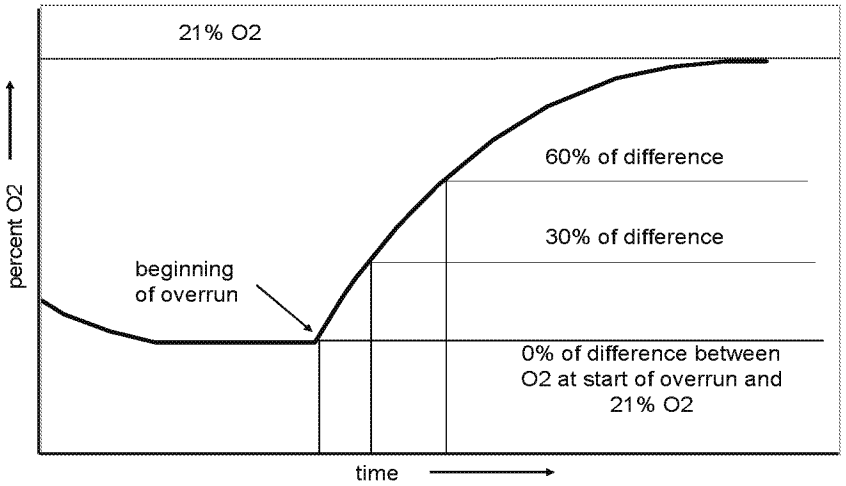

Oxygen Sensor Plausibility Measurement (P2A01) Evaluation Ranges and Allowable Deviations:

	Range 1		Overrun	
	Minimum	Maximum	Minimum	Maximum
Engine speed (rpm)	1100	2700	100	4000
Fuel injection quantity (mg/stroke)	15	38	0	0.5
Air mass (mg/stroke)	400	1000	100	1000
Allowable deviation (% O2)	-7.0	5.5	-5.0	4.6

NOx Sensor Operation Modes

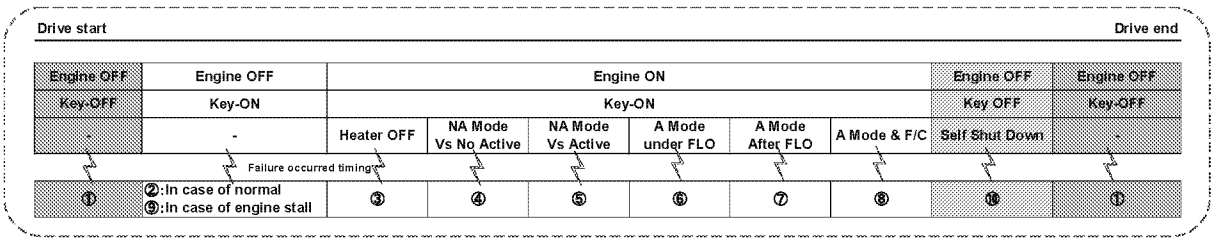

Mode 1 – No voltage supply to module or sensor. Non-operational.
Mode 2 – Voltage is supplied to module, yet voltage is not supplied to the sensor.
Mode 3 – Voltage is supplied to module, yet voltage is not supplied to the sensor. Dew-point waiting period.
Mode 4 – Voltage is supplied to the module and to the sensor. The Vs cell of the sensor is not active.
Mode 5 – Voltage is supplied to the module and to the sensor. The Vs cell of the sensor is active.
Mode 6 – Voltage is supplied to the module and to the sensor. Sensor is in fast light-off to quickly heat sensing element to operational temperature.
Mode 7 – Voltage is supplied to the module and to the sensor. The sensor has exited fast light-off and O2 and NOx will be available during this mode.
Mode 8 - Voltage is supplied to the module and to the sensor. The sensor has exited fast light-off and O2 and NOx will be available during this mode. During this mode a fuel cut condition is present, as communicated by the PCM.
Mode 9 - Voltage is supplied to module, yet voltage is not supplied to the sensor.
Mode 10 - No voltage supply to module or sensor. Non-operational.

ED_002078G_00001322-00509

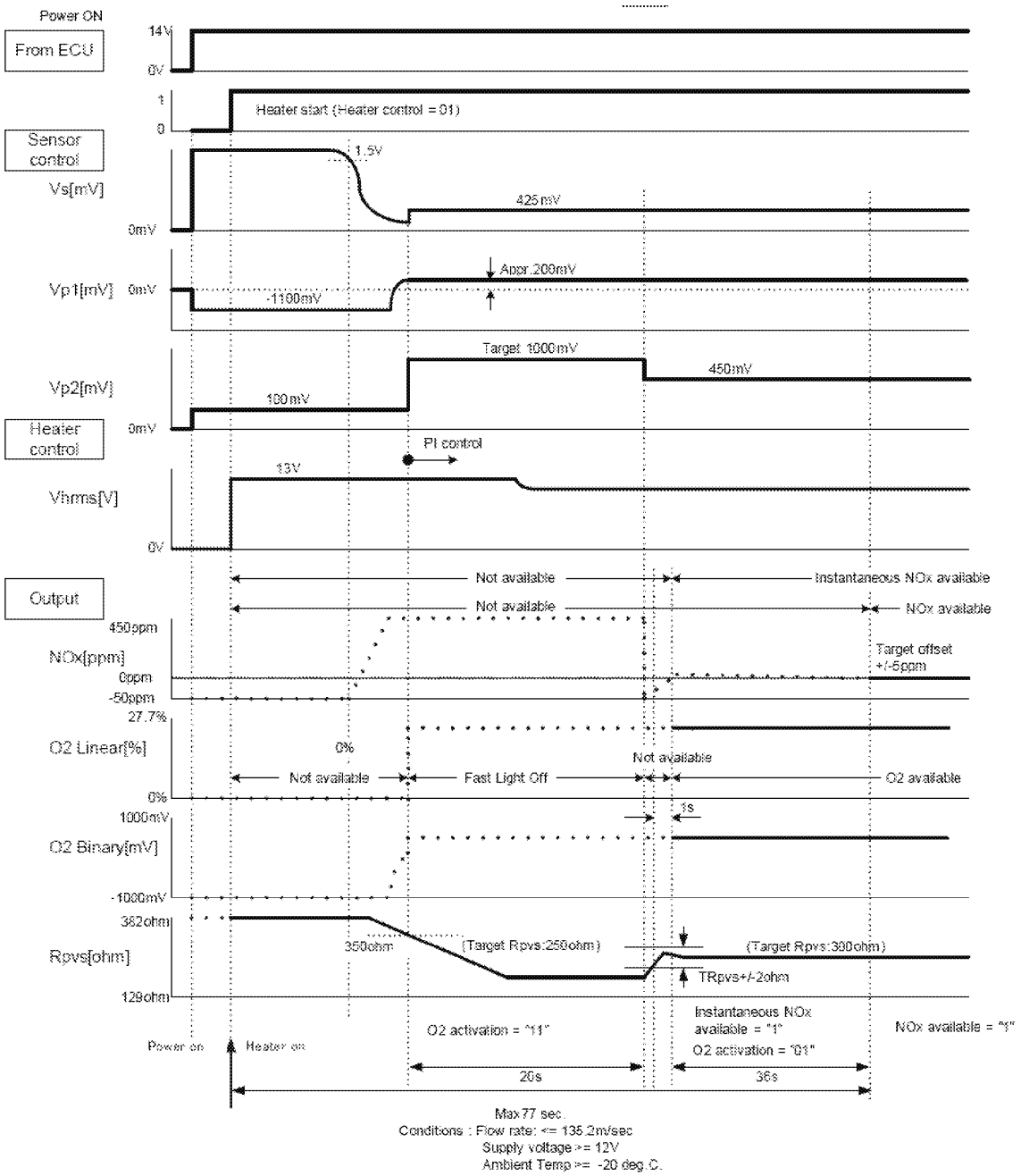
Power ON
From ECU
14V
0V
1
0
Heater start (Heater control = 01)
Sensor control
1.5V
Vs[mV]
425mV
0mV
Appr.200mV
Vp1[mV]
0mV
-1100mV
Target 1000mV
450mV
Vp2[mV]
100mV
Heater control
0mV
PI control
13V
Vhrms[V]
0V
Output
Not available
Instantaneous NOx available
Not available
NOx available
450ppm
NOx[ppm]
Target offset +/-5ppm
0ppm
-50ppm
27.7%
O2 Linear[%]
0%
Not available
Fast Light Off
Not available
O2 available
0%
1000mV
1s
O2 Binary[mV]
-1000mV
382ohm
Rpvs[ohm]
350ohm
(Target Rpvs:250ohm)
(Target Rpvs:300ohm)
TRpvs+/-2ohm
129ohm
Power on
Heater on
O2 activation = "11"
Instantaneous NOx available = "1"
O2 activation = "01"
NOx available = "1"
20s
36s
Max 77 sec.
Conditions : Flow rate: <= 135.2m/sec
Supply voltage >= 12V
Ambient Temp >= -20 deg.C.

EGR Rate System Monitor

The EGR system is a closed loop control system that controls percent of EGR in the cylinder using the EGR valve and Throttle. The percent of EGR is calculated using two different methods and the difference between these two calculations is used to determine if the system is operating corrected. First, the expected amount of EGR in the cylinder is calculated using a model that is based on the commanded EGR and Throttle position. Second, the EGR in the cylinder is measured by subtracting the mass air sensor (MAF) reading from a speed-density model of the air charge into the cylinder. The speed-density model accounts for both fresh air and EGR and is based on the volumetric efficiency of the engine. High or excessive EGR flow is detected when the measured amount of EGR is greater than the expected amount of EGR. Low or insufficient EGR flow is detected when the measured amount of EGR is less than the expected amount of EGR. A slow EGR system is detected using the excessive EGR flow system monitor.

The monitor compares the two calculations, when a set of entry conditions are met, and determines if the system is operating correctly. The entry conditions are selected to ensure robust fault/non-fault detection. A summary of the entry conditions is shown in the tables below. The fault must be detected for a minimum amount of time before being reported. A timer counts up when the entry conditions are met and the fault is present. The timer counts down when the entry conditions are met, the fault is not present, and the current count is greater than 0. When this timer exceeds the time required detect a malfunction, the malfunction is reported.

EGR Flow Check Operation:	
DTCs	P0401 – Insufficient EGR Flow P0402 – Excessive EGR Flow
Monitor Execution	Continuous
Monitor Sequence	None
Monitoring Duration High Flow	4 seconds required to detect a malfunction
Monitoring Duration Low Flow	8 seconds required to detect a malfunction

Typical EGR Flow Check Entry Conditions (High Flow Detection):		
Entry Condition	**Minimum**	**Maximum**
Engine Torque	Monitor is released in a speed/load region as shown in the following figure.	
Engine RPM		
Engine Coolant Temperature	70 deg C	100 deg C
EGR Valve Position	0%	6%
Desired EGR Ratio	0%	15%
Ambient Pressure	74.5 kPa	
EGR System in Closed Loop Control		

ED_002078G_00001322-00511

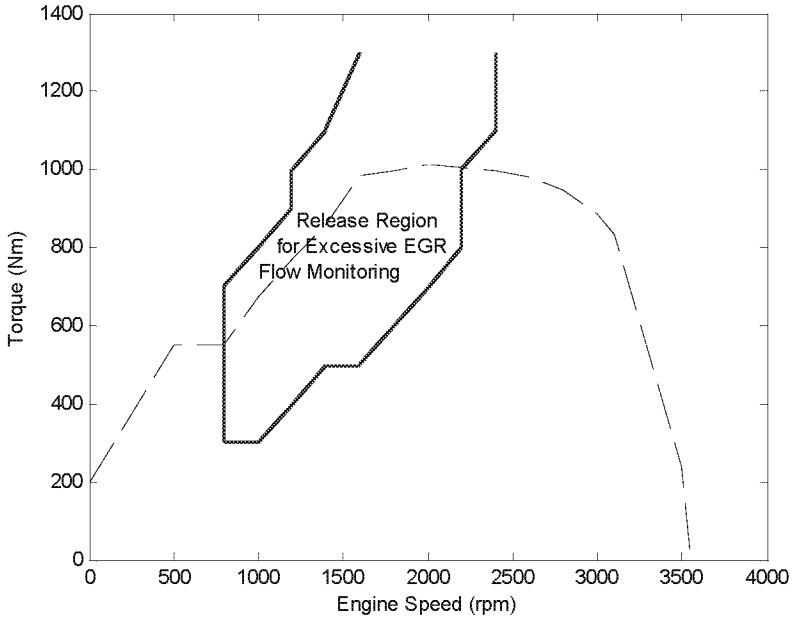

Typical EGR High Flow Rate Malfunction Thresholds:
Expected EGR Ratio – Measured EGR Ratio < -15 (function of engine speed / torque)

ED_002078G_00001322-00512

Typical EGR Flow Check Entry Conditions (Low Flow Detection):		
Entry Condition	**Minimum**	**Maximum**
Engine Torque	Monitor is released in a speed/load region as shown in the following figure.	
Engine RPM		
Engine Coolant Temperature	70 deg C	100 deg C
EGR Valve Position	40%	60%
Desired EGR Ratio	0%	100%
Ambient Pressure	74.5 kPa	
EGR System in Closed Loop Control		

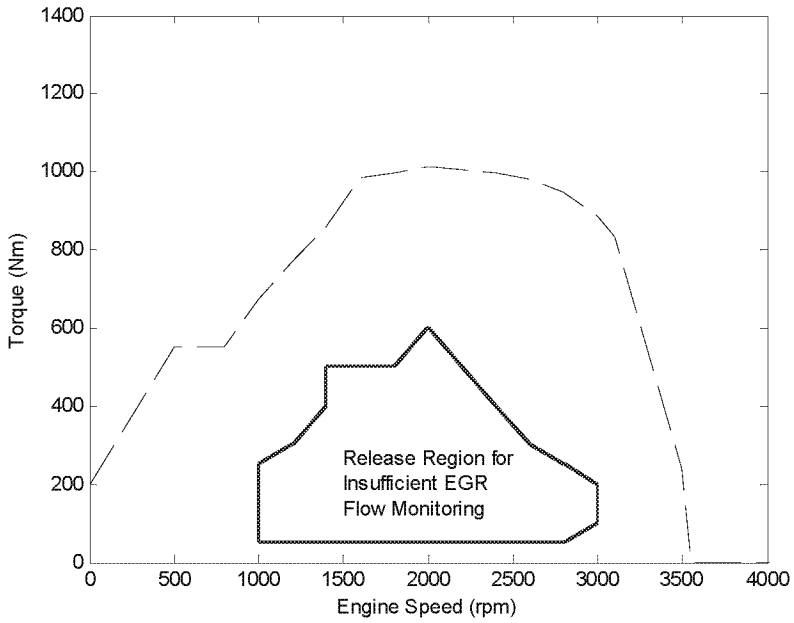

Typical EGR Low Flow Rate Malfunction Thresholds:
Expected EGR Ratio – Measured EGR Ratio > 10 (function of engine speed / torque)

EGR Cooler / EGR Cooler Bypass Monitor

The following describes the method of monitoring the EGR cooling system on chassis certified applications. A second monitoring method is used on dynamometer certified applications and is described later in this section. The functionality of the EGR cooler system, including the bypass valve and temperature sensor, is monitored by means of comparing measured EGR gas temperature downstream of the EGR cooler assembly with measured coolant temperature in the main coolant loop when certain engine operating conditions exist. The operating conditions in which this detection can occur are the monitor entry conditions. Following changes in engine operating conditions, there is a delay before the changes are reflected in the EGR system temperatures. Because of this delay the entry conditions include a number of timers which must complete before the monitor is released. When a condition feeding a timer is no longer met, the timer resets. Two malfunction conditions, EGR overcooling and EGR undercooling can be detected using the EGR cooler monitors.

ED_002078G_00001322-00513

Monitor Entry Condition Timer Locations

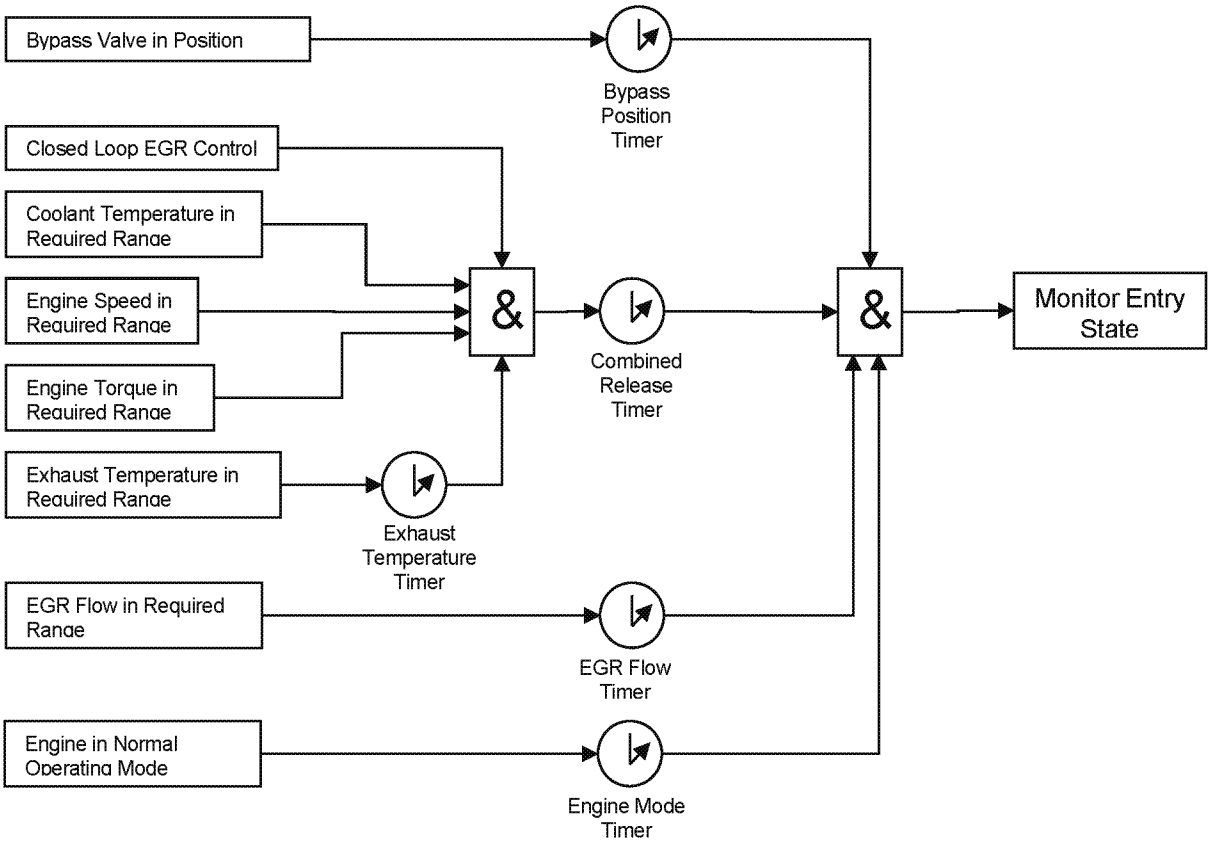

The undercooling monitor can detect when EGR is not being cooled sufficiently, for example, when the EGR cooler bypass is stuck in the bypass position. The entry conditions for EGR undercooling monitoring must be met for monitoring to take place. Once the entry conditions are met and while they continue to be met, the measured EGR temperature downstream of the EGR cooler assembly is compared to a threshold which is determined based on measured coolant temperature. A typical value for this threshold is 70 deg C above engine coolant temperature. If the measured EGR temperature downstream of the EGR cooler assembly is greater than the threshold, for a predetermined amount of time, a fault is detected.

EGR Cooler (Undercooling) Monitor:	
DTCs	P2457 – EGR Cooler Performance
Monitor execution	Once per driving cycle , once entry conditions are met
Monitor Sequence	None
Monitoring Duration	12 seconds to detected a malfunction

EGR Cooler/ECB Entry Conditions (Undercooling):		
Entry Condition	**Minimum**	**Maximum**
EGR Cooler Bypass Valve Command	Cooling Position	
EGR System in Closed-Loop Control		
Engine Coolant Temperature	70 deg C	130 deg C

ED_002078G_00001322-00514

Engine Speed	1100 rpm	3500 rpm
Engine Torque	200 Nm	1400 Nm
Exhaust Temperature	0 deg C	800 deg C
EGR Flow	0 g/s	42 g/s
Engine Operating Mode	Normal	

EGR Cooler/ECB Entry Timers (Undercooling):	
Timer	**Minimum Time**
Bypass Position Timer	5 sec
Combined Release Timer	1 sec
Exhaust Temperature Timer	5 sec
EGR Flow Timer	5 sec
Engine Mode Timer	100 sec

Typical Undercooling Malfunction Thresholds:
Measured EGR temperature downstream of the EGR cooler assembly > Coolant Temperature + 70

ED_002078G_00001322-00515

The overcooling monitor can detect when EGR is being overcooled, for example, when the EGR cooler bypass is stuck in the cooling position. The entry conditions for EGR overcooling monitoring must be met for monitoring to take place. Once the entry conditions are met and while they continue to be met, the measured EGR temperature downstream of the EGR cooler assembly is compared to a threshold which is determined based on measured coolant temperature. A typical value for this threshold is 16 deg C below engine coolant temperature. If the measured EGR temperature downstream of the EGR cooler assembly is less than the threshold, for a predetermined amount of time, a fault is detected.

EGR Cooler (Overcooling) Monitor:	
DTCs	P24A5 – Exhaust Gas Recirculation Cooler Bypass Control Stuck (Bank 1)
Monitor execution	Once per driving cycle , once entry conditions are met
Monitor Sequence	None
Monitoring Duration	12 seconds to detected a malfunction

EGR Cooler/ECB Entry Conditions (Overcooling):		
Entry Condition	**Minimum**	**Maximum**
EGR Cooler Bypass Valve Command	Cooling Position	
EGR System in Closed-Loop Control		
Engine Coolant Temperature	70 deg C	130 deg C
Engine Speed	575 rpm	900 rpm
Engine Torque	70 Nm	300 Nm
Exhaust Temperature	0 deg C	800 deg C
EGR Flow	6 g/s	42 g/s
Engine Operating Mode	Normal	

EGR Cooler/ECB Entry Timers (Overcooling):	
Timer	**Minimum Time**
Bypass Position Timer	5 sec
Combined Release Timer	5 sec
Exhaust Temperature Timer	5 sec
EGR Flow Timer	5 sec
Engine Mode Timer	100 sec

Typical Overcooling Malfunction Thresholds:
Measured EGR temperature downstream of the EGR cooler assembly < Coolant Temperature -16

On dynamometer certified applications, the EGR cooling system is monitored by intrusively moving the bypass door from the cooling position to the bypass position and looking at the response of the temperature out of the EGR cooler. The gradient (slope) of the temperature is compared to a threshold, if the gradient is less than the threshold for the entire monitoring duration, a fault is detected. In contrast, on a non-fault system, once the

ED_002078G_00001322-00516

gradient exceeds the threshold, the monitor pass is latched. Once the monitor pass is latched, the bypass door returns to the cooling position to protect the engine hardware from overheating. Even though, the bypass door returns to the cooling position before the monitor is complete but the monitor continues to be released as long as the entry conditions are met. The monitor only completes once the monitor is released for the full monitoring duration, consecutively.

Monitoring is done during somewhat steady state operation at medium to high speed-load conditions with sufficient EGR flow. Entry are selected so the monitor is released to run when the conditions are correct. The entry conditions required to release the monitor are listed EGR Cooler (Intrusive) Entry Conditions table below. The bypass door must be in the cooling position for a minimum calibrated time for the monitor to be released. The rest of the entry conditions must be met for a different minimum calibrated time before the monitor is released.

To protect the hardware, the monitor is not allowed to re-release immediately if the release is lost because one of more of the entry condition are no longer met.

EGR Cooler (Intrusive) Monitor:	
DTCs	P245A – Exhaust Gas Recirculation (EGT) Cooler Bypass Control Circuit (bank 1)
Monitor execution	Once per driving cycle , once entry conditions are met
Monitor Sequence	None
Monitoring Duration	3 seconds to detected a malfunction

EGR Cooler (Intrusive) Entry Conditions:		
Entry Condition	**Minimum**	**Maximum**
EGR Cooler Bypass Valve Command (only evaluated during monitor pre-release)	Cooling Position	
EGR System in Closed-Loop Control		
Engine Coolant Temperature	70 deg C	140 deg C
Engine Speed	575 rpm	900 rpm
Filtered Absolute Value of the Gradient of Engine Speed		150 rpm/s
Engine Torque	70 Nm	300 Nm
Filtered Absolute Value of the Gradient of Engine Torque		150 Nm/s
Exhaust Temperature	300 deg C	700 deg C
Filtered Absolute Value of the Gradient of Exhaust Temperature		8 deg C / s
Fuel Injection Quantity	0.1 g/rev	0.4 g/rev
Filtered Absolute Value of the Gradient of Fuel Injection Quantity		0.05 g/rev/s
EGR Flow	22 g/s	112 g/s
Filtered Absolute Value of the Gradient of EGR Flow		22 g/s/s
Modeled Intake Manifold Temperature		140 deg C
Engine Operating Mode	Normal	

ED_002078G_00001322-00517

Typical Malfunction Thresholds:
Measured Gradient of EGR Downstream Temperature < 8 deg C / s

EGR System Slow Response

Slow responding EGR systems are detected through the EGR rate system monitor.

EGR Control Limits Monitor

The control limit monitor functions continuously during normal (non-regen) closed-loop operation. The control limits monitor compares the desired percent of EGR with the measured percent of EGR. If the error between these is greater than the threshold for the required duration of time, a fault is set. Specifically, a timer counts up when the entry conditions are met and the fault is present. The timer counts down when the entry conditions are met, the fault is not present, and the current count is greater than 0. When this timer exceeds the time required detect a malfunction, the malfunction is reported.

EGR Closed-loop Control Limits Check Operation:	
DTCs	P04DA (Closed Loop EGR Control At Limit - Flow Too High) P04D9 (Closed Loop EGR Control At Limit - Flow Too Low)
Monitor Execution	Continuous
Monitor Sequence	None
Monitoring Duration	20 seconds to detect a malfunction

Typical EGR Closed-loop Control Limits Check Entry Conditions:
No Air System Faults
EGR system in closed loop EGR control

Typical EGR Control Limits Malfunction Thresholds:
Desired EGR Ratio – Measured EGR Ratio < -60 (function of Engine Speed / Torque) or Desired EGR Ratio – Measured EGR Ratio > 45 (function of Engine Speed / Torque)

Mass Airflow Closed-loop Control Limits Monitor

During DPF regeneration the engine control system controls the mass of fresh air into the cylinder using the EGR valve and throttle valve. In this operating mode, the desired mass of fresh air in the cylinder is compared to the actual mass of air entering the cylinder. If the error is greater than the threshold for the required duration, a fault is set. The monitor is released when the system is in closed loop control. Specifically, a timer counts up when the entry conditions are met and the fault is present. The timer counts down when the entry conditions are met, the fault is not present, and the current count is greater than 0. When this timer exceeds the time required detect a malfunction, the malfunction is reported.

Mass Airflow Closed-loop Control Limits Check Operation:	
DTCs	P02EC - Diesel Intake Air Flow Control System - High Air Flow Detected P02ED - Diesel Intake Air Flow Control System - Low Air Flow Detected
Monitor Execution	Continuous
Monitor Sequence	None
Monitoring Duration	20 seconds required to detect a malfunction

Typical Mass Air Flow Closed-loop Control Limits Check Entry Conditions:
No Air System Faults
EGR System in closed loop air mass control

Typical Air Mass Control Limits Malfunction Thresholds:
Desired Air Mass – Measure Air Mass > 400 (function of Engine Speed / Torque) or Desired Air Mass – Measure Air Mass < -400 (function of Engine Speed / Torque)

BOOST PRESSURE CONTROL SYSTEM MONITORING

Intrusive Turbo Position and Response Monitoring

The 6.7L engine is equipped with an oil pressure actuated, variable vane turbocharger. Additionally, chassis cert applications have a wastegate for bypassing exhaust gas to assist with controlling boost while in heavy load situations. Neither the variable geometry turbo (VGT) nor the wastegate have position sensors, so turbo and wastegate position is inferred using a duty cycle to position transfer function. To verify actual position based on the nominal transfer function, an intrusive monitor sweep is performed. When entry conditions are met, the intrusive monitor for VGT closes the EGR valve, closes the wastegate, and then commands an inferred turbo position of 85%, then 25% within a calibratable time. The minimum and maximum MAP values are saved and compared to a threshold. If the desired separation in MAP pressure isn't achieved, a fault is detected. If the desired separation in MAP is achieved, the test is considered a pass.

ED_002078G_00001322-00519

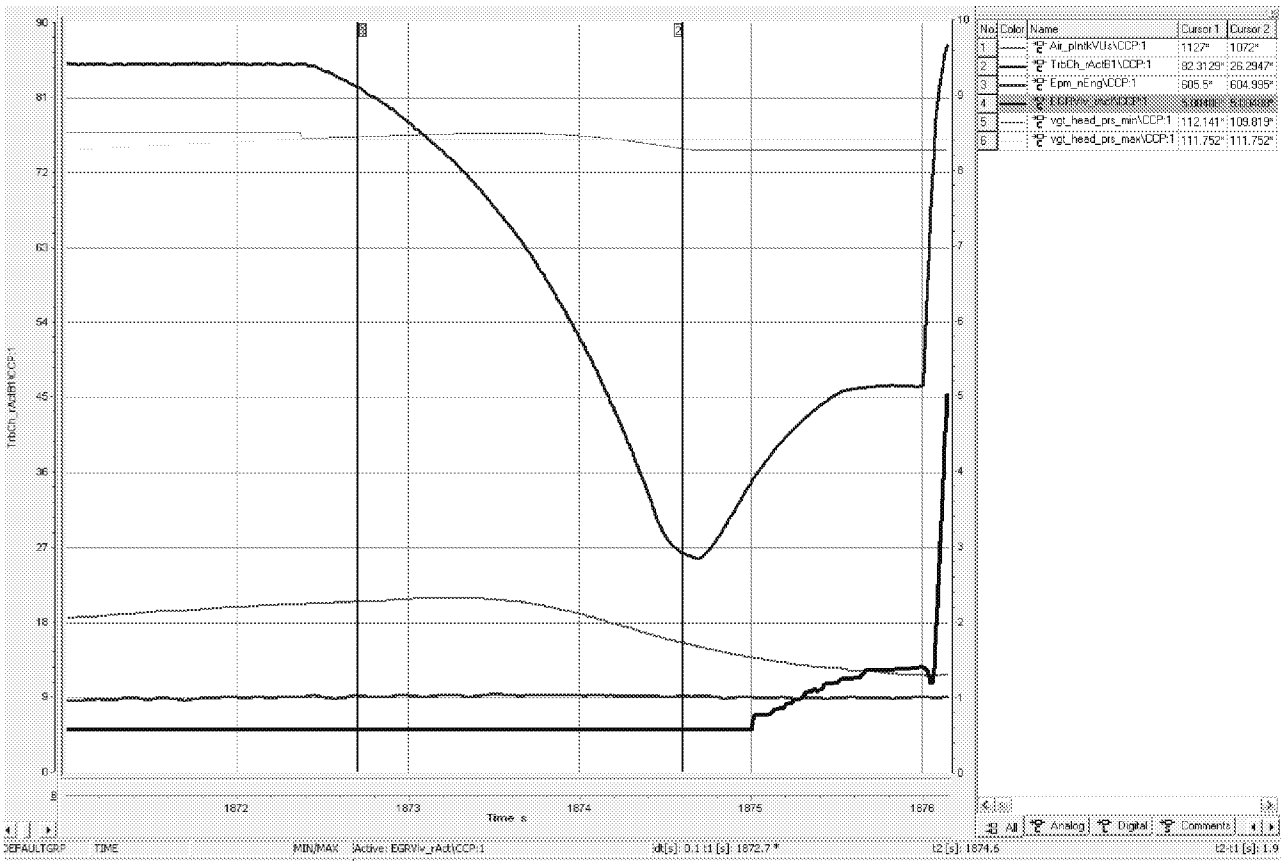

In the example above, at 1871 seconds, the EGR valve is commanded closed, after 3 seconds with EGR off and turbocharger at 85% position, the turbocharger is opened up to. 25% position. The 25% position is held for 4 seconds. If desired separation of 2kpa at sea level is achieved the test is considered a pass. If desired separation isn't achieved the test is completed and failed.

Note: this monitor also serves to monitor for a slowly responding boost pressure system due to the time component of the threshold.

VGT Monitor:	
DTCs	P132B - Turbocharger/Supercharger Boost Control "A" Performance
Monitor Execution	Once per driving cycle
Monitor Sequence	VGT, then wastegate
Sensors OK	ECT, MAP, VS
Typical Monitoring Duration	7 seconds for full VGT monitoring cycle if pressure abort threshold hasn't been reached

Typical VGT Monitor Entry Conditions:		
Entry Condition	Minimum	Maximum
Engine speed for learning	500 rpm	760 rpm
Pedal position allowed for learning		0.5 %
Engine coolant temperature for learning	70 deg C	124 deg C
Fuel quantity allowed for learning		20 mg/stoke
Vehicle speed for learning		3 mph
Loop counts after brake cycle		800 counts
Barometric Pressure	67 kPa	102 kPa
Time after engine start	120 seconds	

Typical VGT Monitor Malfunction Thresholds:
Response from 25% VGT position to 85% VGT position in 4 seconds results in a change in manifold pressure of 2 kPa or greater at sea level or 1.25 kPa at 8000 feet.

ED_002078G_00001322-00521

Intrusive Wastegate Monitoring

The intrusive wastegate monitor operates on the same principles and has the same entry conditions as the intrusive VGT monitor. It runs once the VGT monitor completes, using the same commanded VGT position (85%) and an EGR valve position up to 10%). The wastegate is commanded to 5% open for 2 seconds, then 95% open for 2 seconds. The minimum and maximum EBP values are saved and compared to a threshold. If the desired separation in EBP pressure isn't achieved, a fault is detected.

Wastegate Monitor:	
DTCs	P1249- Wastegate Control Valve Performance
Monitor Execution	Once per driving cycle
Monitor Sequence	VGT, then wastegate
Sensors OK	ECT, MAP, VS
Typical Monitoring Duration	4 seconds for full wastegate monitoring

Typical Wastegate Monitor Entry Conditions:		
Entry Condition	Minimum	Maximum
Engine speed for learning	500 rpm	760 rpm
Pedal position allowed for learning		0.5 %
Engine coolant temperature for learning	70 deg C	124 deg C
Fuel quantity allowed for learning		20 mg/stoke
Vehicle speed for learning		3 mph
Loop counts after brake cycle		800 counts
Barometric Pressure	67 kPa	102 kPa
Time since start	120 seconds	

Typical Wastegate Monitor Malfunction Thresholds:
Response from 5% wastegate position to 95% wastegate position in 2 seconds results in a change in exhaust backpressure of 2.0 kPa or greater at sea level or 1.25 kPa at 8000 feet.

ED_002078G_00001322-00522

Functional Overboost Monitoring

The 6.7L engine utilizes a closed loop boost pressure controller to maintain desired boost pressure set point under all temperature ranges and engine operating modes. The overboost monitor compares the desired vs. actual measured boost pressure while in a specific range of closed loop boost pressure operation. If the boost pressure governor deviation is greater than the calibrated threshold for 7 seconds, a fault is detected and the P-code is set. The closed loop monitoring window is defined as any inner torque above 50 nm, and any engine speed above 1000 rpm. Torque window and threshold slightly different for dyno cert due to different turbocharger configuration, calibration, and air path response.

This diagnostic will detect a turbo slowly responding or stuck in the primarily closed condition.

Overboost Monitor:	
DTCs	P0234 - Turbocharger/Supercharger "A" Overboost Condition
Monitor Execution	Continuous
Monitor Sequence	None
Sensors OK	ECT, MAP, MAF,
Typical Monitoring Duration	7 seconds for fault detection

Typical Overboost Monitor Entry Conditions:		
Entry condition	Minimum	Maximum
Engine Torque	50 Nm	
Engine Speed	1000	4000

Typical Overboost Monitor Malfunction Thresholds:
If desired boost pressure – actual boost pressure < -15.0 kPa for 7 seconds, a fault is detected.

Functional Underboost Monitoring

The underboost monitor works in a similar fashion to the overboost monitor by comparing the desired vs. actual measured boost pressure while in a specific range of closed loop boost pressure operation. If the boost pressure governor deviation is greater than the calibrated threshold for 7 seconds, a fault is detected and the P-code is set. The closed loop monitoring window is defined as any inner torque above 50 nm, and any engine speed above 1500 rpm. The threshold limit is wider for the underbooost monitor due to transient boost system response, compensation for boost pressure lag, and short term (1-2 second) momentary torque truncation when air path torque is kept high, but fueling is limited for component protection.

This diagnostic will detect a gross air path leak such as the turbo discharge or CAC discharge tube being blown off, major pre-turbo exhaust leaks, or a turbo slowly responding or stuck in the open VGT position.

Overboost Monitor:	
DTCs	P1247 - Turbocharger Boost Pressure Low
Monitor Execution	Continuous
Monitor Sequence	None
Sensors OK	ECT, MAP, MAF,
Typical Monitoring Duration	7 sec

Typical Overboost Monitor Entry Conditions:		
Entry condition	Minimum	Maximum
Engine Torque	50 Nm	
Engine Speed	1000 rpm	4000 rpm

Typical Overboost Monitor Malfunction Thresholds:
If desired boost pressure – actual boost pressure > 15 kPa for 7 seconds, a fault is detected.

Threshold Underboost Monitoring

The pressure-based underboost diagnostic is adequate for detecting gross air system leaks; however, the emissions threshold leak to exceed the HC standard is approximately a one quarter inch NPT hole. With a leak of that magnitude, the closed loop boost pressure governor is capable of maintaining the desired boost pressure. The functional underboost monitor is not able to detect a leak of such size, so an additional boost system diagnostic is utilized since desired pressure is maintained in the system.

The closed loop boost pressure controller controls boost based predicted control targets and anticipated turbocharger position. The output value, in percentage, indicates the "control effort" required to maintain the desired boost pressure. With a boost system leak, the control effort increases. There is a temperature entry condition, torque entry conditions, a steady state requirement on manifold pressure, an exhaust temperature entry condition, an exhaust lambda entry condition, and a threshold map. If the threshold is exceeded for 4 seconds, a fault is detected. This diagnostic will also detect a turbocharger VGT mechanism stuck in the open position.

Threshold Underboost Monitor:	
DTCs	P0299 - Turbocharger/Supercharger "A" Underboost Condition
Monitor Execution	Continuous
Monitor Sequence	None
Sensors OK	ECT, MAP, MAF
Typical Monitoring Duration	7 sec

ED_002078G_00001322-00524

Threshold Underboost Entry Conditions:		
Entry condition	Minimum	Maximum
Engine Torque	200 Nm	700 Nm
Engine coolant temperature	-7 deg C	
Ambient air temperature	-7 deg C	
Barometric Pressure	75 kPa	110 kPa
MAP steady state pressure		100 kPa
TOxiCatUs Temperature	99 deg C	
Mass Air Flow		1300 kg/h
Not in Cold Start Warm-up Mode		
Regeneration Status	None	

Typical Threshold Underboost Monitor Malfunction Thresholds:
If control effort percent is > threshold map for 4 seconds and Exhaust Lambda is less than 1.33, a fault is detected.

Typical Threshold Underboost monitor (P0299) Threshold Map												
RPM/TRQ	**600**	**750**	**1000**	**1200**	**1600**	**2000**	**2250**	**2500**	**2750**	**3000**	**3250**	**3500**
0	50	50	50	50	50	50	50	50	50	50	50	50
100	50	50	50	50	50	50	50	50	50	50	50	50
150	50	50	50	50	50	50	50	50	50	50	50	50
200	50	50	20	12	12	12	12	12	12	25.5	25.5	25.5
250	50	50	20	12	12	12	12	12	12	27.5	27.5	25.5
300	50	50	20	12	12	12	12	12	12	27.5	27.5	25.5
350	50	50	20	12	12	12	12	12	12	27.5	27.5	25.5
400	50	50	20	12	12	12	12	15	15	25.5	25.5	25.5
450	50	50	20	12	12	12	12	15	16	25.5	25.5	25.5
500	50	50	20	12	12	12	12	18.5	18.5	25.5	25.5	25.5
600	50	50	20	12	12	12	12	18.5	22.5	25.5	25.5	25.5
700	50	50	20	12	12	12	12	18.5	22.5	25.5	25.5	25.5

Threshold Overboost Monitoring

The pressure-based overboost diagnostic is adequate for detecting a turbo stuck in the closed position on the dyno cert application, however with a stuck turbocharger on the chassis cert application the pressure deviation is not significant because of wastegate operation. With a wastegate in place, the closed loop boost pressure governor is capable of maintaining the desired boost pressure with the turbocharger stuck in a closed position. The functional overboost monitor is not able to detect this, so an additional boost system diagnostic is utilized since desired pressure is maintained in the system.

The closed loop boost pressure controller controls boost based predicted control targets and anticipated turbocharger position. The output value, in percentage, indicates the "control effort" required to maintain the desired boost pressure. With a turbocharger stuck in the closed position, the control effort decreases. There is a temperature entry condition, torque entry conditions, a steady state requirement on manifold pressure, an exhaust temperature entry condition, and a threshold map. If the threshold is exceeded for 4 seconds, a fault is detected.

Threshold Overboost Monitor:	
DTCs	P0234 - Turbocharger/Supercharger "A" Overboost Condition
Monitor Execution	Continuous
Monitor Sequence	None
Sensors OK	ECT, MAP, MAF
Typical Monitoring Duration	4 sec

Typical Threshold Overboost Entry Conditions:		
Entry condition	Minimum	Maximum
Engine Torque	200 Nm	700 Nm
Engine coolant temperature	-7 deg C	
Ambient air temperature	-7 deg C	
Barometric Pressure	75 kPa	110 kPa
MAP steady state pressure		100 kPa
TOxiCatUs Temperature	99 deg C	
Mass Air Flow		1300 kg/h
Not in Cold Start Warm-up Mode		
Regeneration Status	None	

Typical Threshold Overboost Monitor Malfunction Thresholds:
If control effort percent is < threshold map for 4 seconds a fault is detected.

Typical Threshold Overboost monitor (P0234) Threshold Map												
RPM/TRQ	**600**	**750**	**1000**	**1200**	**1600**	**2000**	**2250**	**2500**	**2750**	**3000**	**3250**	**3500**
0	-43	-43	-43	-43	-43	-43	-43	-43	-43	-43	-43	-43
100	-43	-43	-43	-43	-43	-43	-43	-43	-43	-43	-43	-43
150	-43	-43	-43	-43	-43	-43	-43	-43	-43	-43	-43	-43
200	-43	-43	-43	-43	-43	-43	-43	-43	-43	-43	-43	-43
250	-43	-43	-43	-43	-43	-43	-43	-43	-43	-43	-43	-43
300	-43	-43	-43	-43	-43	-43	-43	-43	-43	-43	-43	-43
350	-43	-43	-43	-43	-43	-43	-43	-43	-43	-43	-43	-43
400	-43	-43	-43	-43	-43	-43	-43	-43	-43	-43	-43	-43
450	-43	-43	-43	-43	-43	-43	-43	-43	-43	-43	-43	-43

ED_002078G_00001322-00526

500	-43	-43	-43	-43	-43	-43	-43	-43	-43	-43	-43	-43
600	-43	-43	-43	-43	-43	-43	-43	-43	-43	-43	-43	-43
700	-43	-43	-43	-43	-43	-43	-43	-43	-43	-43	-43	-43

ED_002078G_00001322-00527

Charge Air Cooler Monitoring

The 6.7L engine is equipped with an air to water charge air intercooler. The CAC is on a secondary coolant loop, independent from the main engine coolant system. The temperature at the outlet of the cooler is measured as TCACDs, however the temperature going into the cooler is modeled.

To detect a CAC under cooling situation, the efficiency of the cooler is modeled at various speeds and airflows via a 3d speed/airflow multiplier table, providing a modeled cooler out temperature. Cooler efficiency * compressor out temperature = modeled cooler out temp. This modeled cooler out temp is then compared to the measured coolant out temp, if the difference is less than a threshold curve or greater than a threshold, a fault is detected and a p-code is set.

Charge Air Cooler Monitor:	
DTCs	P026A - Charge Air Cooler Efficiency Below Threshold P007E - Charge Air Cooler Temperature Sensor Intermittent/Erratic (Bank 1)
Monitor Execution	Continuous
Monitor Sequence	None
Sensors OK	ECT, MAP, MAF
Typical Monitoring Duration	4 seconds for fault detection

Typical Charge Air Cooler Monitor Entry Conditions:		
Entry condition	Minimum	Maximum
Engine speed	1100 rpm	3350 rpm
Engine coolant temperature	70 deg C	
Ambient air temperature	-7 deg C	
Barometric Pressure	74.5 kPa	110 kPa
Manifold absolute pressure	120 kPa	
Intake air temperature	-7 deg C	
Injection quantity	20mg/stk	85mg/stk

Typical Charge Air Cooler Monitor Malfunction Thresholds:
P026A - If the difference of measured temperature and modeled temperature is less than -15 deg C at 0 deg C compressor out temp, or less than -10 deg C at 250 deg C compressor out temp, a fault is set. P007E – If the difference of measured temperature and modeled temperature is greater than 35 deg C a fault is set.

ED_002078G_00001322-00528

DPF Filter Efficiency Monitor

The DPF is monitored to ensure no leaks have developed in the substrate. The monitor runs after a regeneration event where sufficient time was spent above a temperature threshold (in order to insure a proper regen).

The DPF Filter Efficiency monitor compares the calculated restriction (from a sensor measuring delta pressure across the DPF) to the expected restriction calculated from a soot model (using various engine sensors as inputs). After a successful regeneration event, the monitor waits for DPF temperatures to fall below a threshold (400 degC, to allow for an accurate soot estimate)and for a small quantity of soot to build up in the DPF (approx 3 grams). At this point, the monitor performs a filtering routine on the calculated restriction (from deltaP sensor) and locks in the initial restriction. Once sufficient soot has built up in the DPF (based on integrated soot from the soot model), the monitor will repeat the filtering routine on the calculated restriction (from deltaP sensor) and from the estimated soot in the DPF (from soot model). The ratio of restrictions (actual vs soot estimate) is compared to a threshold. If the ratio is less than a threshold, an error flag is set. The monitor allows for multiple monitoring sessions in order to provide debouncing before declaring the monitor as a pass or fail. When a sufficient number of sessions have been completed, the monitor is declared complete. The number of sessions with a failed result is compared to a threshold. If the number of failed sessions is greater than a threshold, the monitor is declared as failed and the code is set.

Monitor Summary:

DTCs	P2002 – Diesel Particulate Filter Efficiency Below Threshold
Monitor execution	P2002: Once per trip after a DPF regeneration

Monitor Sequence	None
Sensors OK	EGT, DPFP, CKP, ECT (P0117, P0118), EGT13 EGT14, MAF, IAT, DPFdP
Monitoring Duration	Once between regeneration events

Typical Entry Conditions:

Entry condition	Minimum	Maximum
DPF temperature during regen (average of DPF inlet/outlet)	550 degC	
Time above temp threshold in regen	300 sec	
DPF temperature (post-regen, to trigger monitor)		400 degC
Estimated soot load in DPF		38.5 grams
Estimated soot consumed due to passive regen		10 grams
DPF temperature (inlet or outlet)		500 degC
No codes for sensors used as inputs to the monitor		
Not currently in a regeneration event		
Exhaust volumetric flow	300 m3/hour	1800 m3/hour
Ambient air temperature	-6.7 decC	

ED_002078G_00001322-00529

Ambient pressure	74.5 kPa	
DPF restriction not being calculated from open loop soot estimation		
Percentage of integrated soot under conditions where soot model is not accurate		32%

Typical Malfunction Thresholds:
DPF Efficiency Test: (P2002) Ratio of restriction from delta pressure sensor vs soot model is below a threshold for a sufficient number of monitoring sessions. Typical values for thresholds: Ratio of restrictions: 0.70 (unitless) Debounce counter for number of failed sessions: 3 Counter for number of sessions to declare the monitor complete: 3

DPF Filter Missing Substrate Monitor

The DPF is monitored to ensure that the filter has not been removed.

The DPF Missing Substrate monitor compares the measured pressure upstream of the DPF to a threshold (function of volumetric exhaust flow). A debounce counter will increment when the pressure is below the threshold and decrement if the pressure is above the threshold (clipped to a minimum of 0). When the debounce counter exceeds a threshold, a fault is indicated.

Monitor Summary:	
DTCs	P244A – Diesel Particulate Filter Differential Pressure Too Low
Monitor execution	P244A: Continuous while meeting entry conditions
Monitor Sequence	None
Sensors OK	EGT, DPFP, CKP, ECT (P0117, P0118), EGT13 EGT14, MAF, IAT
Monitoring Duration	90 sec

Typical Entry Conditions:		
Entry condition	Minimum	Maximum
Exhaust volumetric flow	300 m3/hr	2400 m3/hr
Not a regeneration event		
Intake air temperature	-20 deg C	
Engine coolant temperature	70 deg C	127 deg C
Time after regeneration	300 sec	
Ambient Air Temperature	-30 deg C	
PTO inactive		

ED_002078G_00001322-00530

Engine Indicated Torque	50 N-m	
DPF inlet temperature	150 deg C	

Typical Malfunction Thresholds:
DPF Differential Pressure Test: (P244A) Measured DPF inlet pressure is below a threshold (function of engine exhaust volumetric flow) for 90 seconds. Typical values for threshold:

Flow (m^3/sec)	300	600	900	1200	1500	1800	2100	2500
Pressure (kPa)	7.99	15.02	27.94	47.13	72.80	104.94	143.45	204.61

DPF Frequent Regeneration Monitor

The DPF Frequent Regeneration monitor calculates the distance between aftertreatment regeneration events. The distance between successive regeneration events is calculated and the average distance is calculated for the two most recent regeneration events. If the distance between regen events is below a threshold, a fault is indicated.

Monitor Summary:	
DTC	P2459 – Diesel Particulate Filter Regeneration Frequency
Monitor execution	During each completed regeneration event
Monitor Sequence	None
Sensors OK	DPFP

Typical Entry Conditions:		
Entry condition	Minimum	Maximum
Regeneration runs to completion (not aborted by customer input or drive cycle)		
Not in “degraded regen” mode due to DPF pressure sensor error		
Fraction of time spent in speed/load conditions where monitor is reliable	0.20	

Typical Malfunction Thresholds:
A fault is stored when the average distance between regeneration events is below a threshold. Typical threshold is 42 km.

ED_002078G_00001322-00531

DPF Incomplete Regeneration Monitor

The DPF Incomplete Regeneration monitor is used to detect an event where the DPF is not fully regenerated. If a regeneration event is aborted due to duration and the restriction of the DPF is still above a threshold, a fault is indicated. Upon the first occurrence of an incomplete regen, the system is put into a "degraded" regen mode. Another regen will be forced in approximately 150 miles unless a normal regen is triggered by the soot load first.

Monitor Summary:	
DTC	P24A2 – Diesel Particulate Filter Regeneration Incomplete
Monitor execution	During each DPF regeneration cycle
Monitor Sequence	None
Sensors OK	EGT11, EGT12,EGT13, EGT14, DPFP, INJ
Monitoring Duration	20 minutes (maximum)

Typical Entry Conditions:		
Entry condition	Minimum	Maximum
Monitor is activated during Aftertreatment regeneration events		
Ambient air temperature	-6.7 degC	
Ambient pressure	74.5 kPa	
Engine speed	1000 rpm	3500 rpm
Engine Indicated Torque	150 N-m	1500 N-m
Engine Coolant Temperature	70 degC	
Minimum time with valid entry conditions (function of regen duration)		

Typical Malfunction Thresholds:
If the restriction is above a threshold, a fault is indicated.

ED_002078G_00001322-00532

DPF Feedback Control Monitors

The system is monitored to ensure that closed loop control of the regeneration event is initiated within a reasonable period of time. The monitor runs during a regeneration event and compares the time in closed loop control to the total time in regen. If the time in closed loop control is less than a threshold (a function of total time in regen), then a fault is indicated.

If the closed loop controller is saturated at its limits and the temperature is not within the desired limit, a timer will increment. If control is regained, the timer will decrement. At the end of the regeneration event, if this timer exceeds a threshold (a function of total time in regen), a fault is indicated

Note: Ford Motor Company 2011 diesel programs are using in-cylinder post injection to achieve regeneration, not external exhaust injection. The Post injection is monitored during this feedback monitor; there is no additional monitor for "active / intrusive injection"

Monitor Summary:	
DTC	P24A0 – DPF Temperature Control P249F – Excessive Time To Enter Closed Loop DPF Regeneration Control
Monitor execution	During an active regeneration event
Monitor Sequence	None
Sensors OK	TIA, TCO, AMP, EGT11, EGT12, EGT13, EGT14
Monitoring Duration	Once per regeneration event

Typical Entry Conditions:		
Entry condition	Minimum	Maximum
Engine Speed	1200 rpm	3500 rpm
Indicated Torque Setpoint	200 Nm	1500 Nm
Ambient Temperature	-6.7 deg C	
Coolant Temperature	70 deg C	
Barometric Pressure	74.5 kPa	

Typical Malfunction Thresholds:
P249F - If the time in closed loop operation is less than a threshold (function of total time in regen), a fault is indicated. P24A0 - If the difference between desired and actual temperature is greater than a threshold for a sufficient period of time, a fault is indicated.

ED_002078G_00001322-00533

DPF Restriction Monitor

The DPF is monitored for conditions where it may be overloaded. The monitor compares the calculated restriction of the DPF to two thresholds. By exceeding the first threshold for a sufficient period of time, a wrench light will be illuminated. By exceeding the second threshold for a sufficient period of time, a wrench light and a MIL will be illuminated and engine output will be limited and EGR is disabled.

Monitor Summary:	
DTCs	P2463 – Diesel Particulate Filter Restriction – Soot Accumulation P246C - Diesel Particulate Filter Restriction – Forced Limited Power
Monitor execution	Continuous while meeting entry conditions
Monitor Sequence	None
Sensors OK	DPFP
Monitoring Duration	300 seconds

Typical Entry Conditions:		
Entry condition	Minimum	Maximum
Engine Speed	625 rpm	

Typical Malfunction Thresholds:
Diesel Particulate Filter Restriction – Soot Accumulation (P2463) (Wrench Light) Calculated normalized restriction is 1.5 times the normal value for soot load. Diesel Particulate Filter Restriction – Forced Limited Power (P246C) (Immediate MIL and Wrench Light) Calculated normalized restriction is 2.0 times the normal value for soot load.

ED_002078G_00001322-00534

Thermostat Monitor

The Thermostat Monitor checks that the thermostat is operating properly by modeling Engine Coolant Temperature (ECT) based on engine fueling, engine speed, vehicle speed, and the ambient temperature. There are increment and decrement portions to the model; the increment is based on engine speed and fuel quantity, while the decrement is derived from calculated radiator efficiency based on coolant delta temp to ambient and vehicle speed. The model is delayed by 60 seconds after engine start to negate potential errors due to block heater use. It is also suspended while in catalyst warm-up mode due to errors in fuel quantity heat being contributed to the coolant.

Once that estimation reaches the thermostat start-to-open temperature, if the actual measured ECT has not reached a minimum warm-up temperature and the driver has not spent too much time in part fuel cut off (over 30%), too low load (over 70%), too high vehicle speed (over 70%), or too low vehicle speed (over 70%) - then the thermostat is determined to be stuck open.

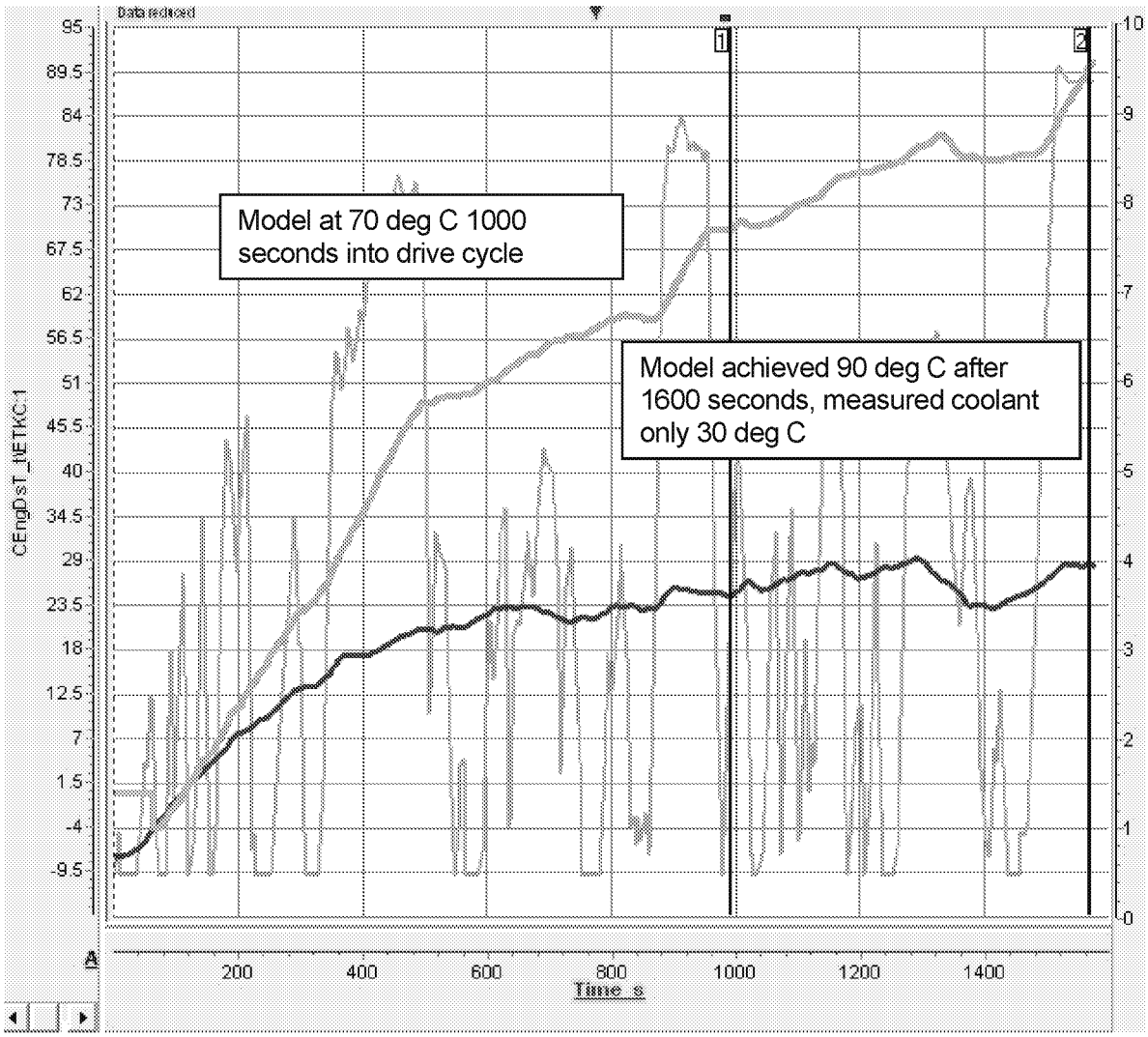

Warmup at -7 deg C on Unified Drive Cycle, DTC set when modeled temp reaches 90 deg C. Measured coolant temperature was only at 30 deg C.

ED_002078G_00001322-00535

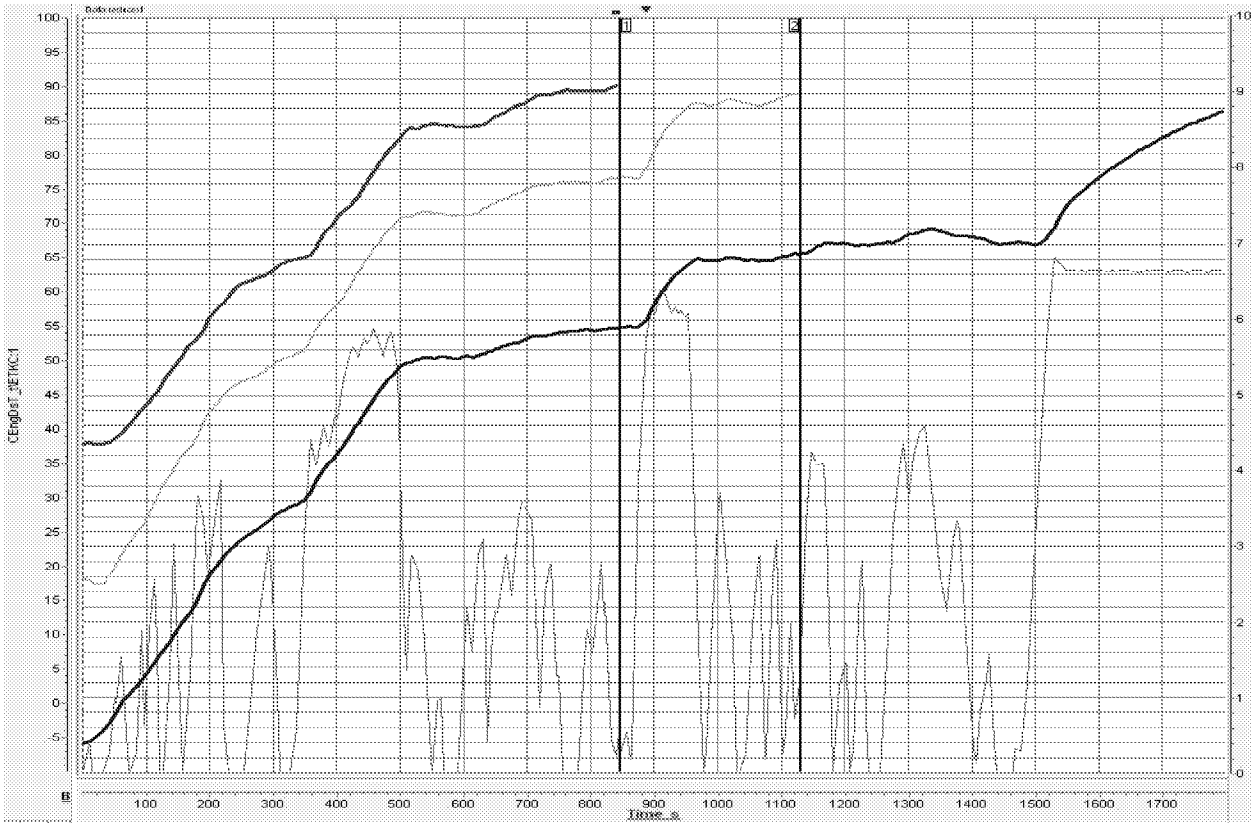

Warm-up profiles with nominal thermostat on Unified Drive Cycle at -7, 21 and 38 deg C ambient start temperatures.

Thermostat Monitor:			
DTCs	P0128 –Coolant Temp Below Thermostat Regulating Temperature		
Monitor Execution	Continuous		
Monitor Sequence	None		
Sensors OK	Engine Coolant Temperature (ECT), Intake Air Temperature (IAT), Vehicle Speed (VS)		
Typical Monitoring Duration	Nominal time it takes for engine to warm up to thermostat "Start-To–Open" temperature – see approximate times below. (Note: Unified Drive Cycle is 23.9 minutes long)		
	Ambient Temperature	Drive Cycle	Completion Time
	-7 deg C	Unified Drive Cycle + 70 mph cruise	33 min
	21 deg C	Unified Drive Cycle	19 min
	38 deg C	Unified Drive Cycle	14 min

ED_002078G_00001322-00536

Typical Thermostat Monitor Entry Conditions:		
Entry condition	Minimum	Maximum
Modeled engine coolant temperature	90 deg C	
Engine coolant temperature at start	-7 deg C	54 deg C
Intake air temperature at start	-7 deg C	
Ratio of time that the vehicle speed is above, 85 km/hr, to the total monitoring time		70%
Ratio of time that the engine fueling is below 20 mg/str to the total monitoring time		30%
Ratio of time that the engine torque is below 60 n/m to the total monitoring time		70%
Ratio of time that the vehicle speed is below 45 km/hr to the total monitoring time		70%

Typical Thermostat Monitor Malfunction Thresholds:
Measured Engine Coolant Temperature < 70 deg C when modeled coolant temp > 90 deg C

ED_002078G_00001322-00537

Primary Coolant Temp Dynamic Monitoring

To ensure the primary ECT sensor has not stuck below normal operating range, a simple dynamic check to verify a minimum rise in coolant temperature over a calibratable time has been implemented. If coolant temperature at start is greater than -35 deg C and less than 54 deg C, the monitor is enabled. At -35 deg C, the coolant is expected to rise up to -7 deg C in 291 seconds or less. If -7 deg C coolant temp. is not achieved in the required 291 second timeframe, a fault is detected. At a -7 deg C start temp, the coolant is expected to rise to 40 deg C in 5450 seconds- assuming worst case with EGR off, vehicle idling in neutral with heater on. Again, if the minimum temperature is not achieved in the required time, a fault is detected. This diagnostic is used in conjunction with the oil vs. coolant plausibility check, thermostat model, and SRC checks to verify proper ECT operation and engine warm-up.

ECT Dynamic Monitor:	
DTCs	P0116 - Engine Coolant Temperature Sensor 1 Circuit Range/Performance
Monitor Execution	Once per trip
Monitor Sequence	None
Sensors OK	ECT
Typical Monitoring Duration	291 seconds at -35 deg C start temp. idle only 5150 seconds at -7 deg C start temp, idle only

Typical ECT Dynamic Monitor Entry Conditions:		
Entry condition	Minimum	Maximum
Engine coolant temperature	-35 deg C	54 deg C
Engine speed	400 rpm	

Typical ECT Dynamic Monitor Malfunction Thresholds:
291 seconds at -35 deg C start temp to rise to -7 deg C 5150 seconds at -7 deg C start temp to rise to 40 deg C

ED_002078G_00001322-00538

Secondary Coolant Temp Dynamic Monitoring

The 6.7L engine has a secondary coolant loop with two thermostats, a 20C thermostat for the charge air cooler and fuel cooler, and a 45C thermostat for the EGR cooler and trans cooler. System schematic below:

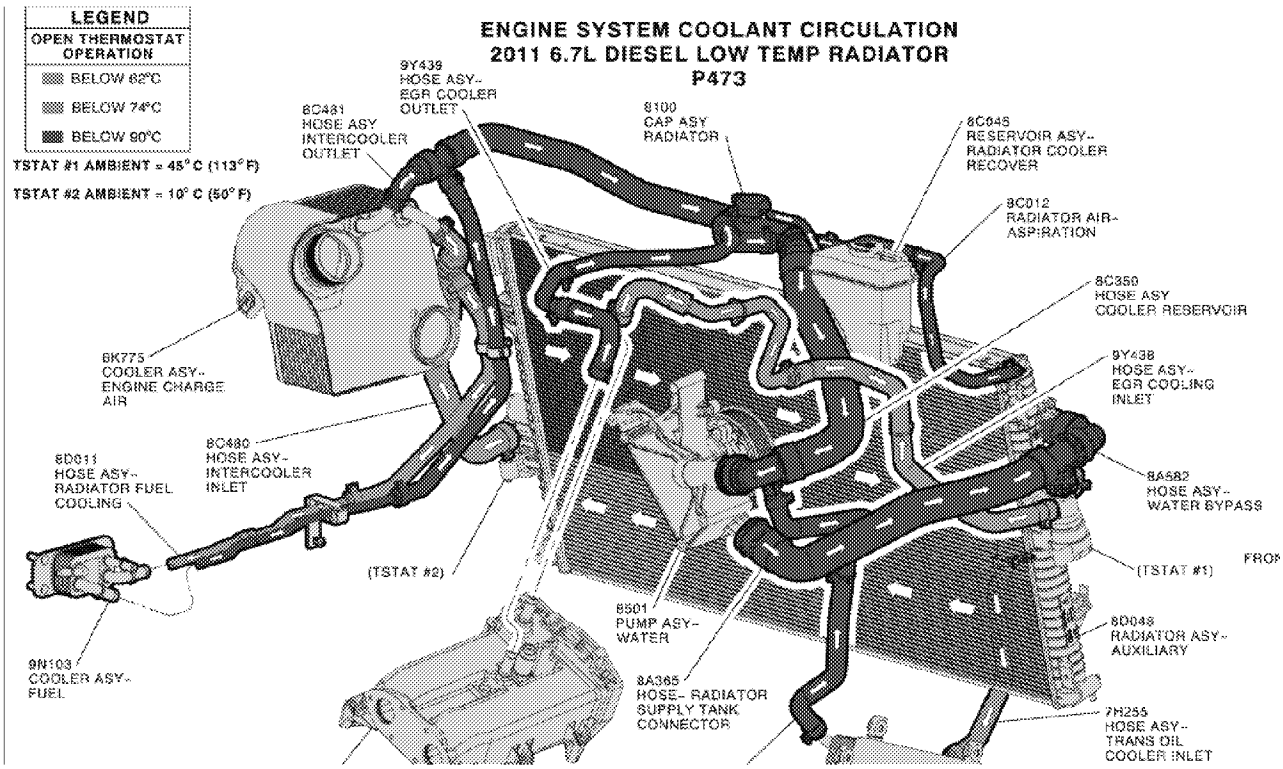

The dynamic check to detect a stuck ECT2 sensor is identical in function to the dynamic check used for the primary coolant loop. A minimum rise is expected over a calibratable amount of time,

ECT2 Dynamic Monitor:	
DTCs	P2183 - Engine Coolant Temperature Sensor 2 Circuit Range/Performance
Monitor Execution	Once per trip
Monitor Sequence	None
Sensors OK	ECT2
Typical Monitoring Duration	5750 sec at -35C, 200 at 25C

Typical ECT2 Dynamic Monitor Entry Conditions:		
Entry condition	Minimum	Maximum
ECT2	-35 deg C	45 deg C
Engine Speed	400 rpm	

Typical ECT2 Dynamic Monitor Malfunction Thresholds:
within the time duration, must reach 25C

ED_002078G_00001322-00539

Cold Start Emission Reduction System Monitor (Only Chassis Cert. Applications)

Note: This monitor only applies to Chassis Certified applications.

The Post DOC temperature is monitored during a cold start for the CSER System Monitor. The modeled Post DOC temperature rise is compared to the measured Post DOC temperature rise. Specifically, the monitor compares the maximum temperature rises. An error is detected if the difference between the modeled and measured Post DOC maximum temperature rise is above a threshold.

Error if DTPost_DOC_model – DTPost_DOC_meas > Threshold

- DTPost_DOC_model = MAX(TPost_DOC_model) – INIT(TPost_DOC_model)
- MAX(TPost_DOC_model) = maximum of TPost_DOC_model during EOM3 ON and calibratable time after EOM3 switched to OFF
- INIT(TPost_DOC_model) = TPost_DOC_model when EOM3 ON
- Same method is used to calculate DTPost_DOC_meas

An error will also be detected if the modeled vs. measured post DOC maximum temperature rise is above a threshold.

CSER System Check Operation:	
DTCs	P050E – Cold Start Engine Exhaust Temperatures Too Low
Monitor execution	During EOM3 Operation, once per drive cycle
Monitor Sequence	None
Sensors OK	TIA, EGT1, EGT2, MAF, MAP, P3
Monitoring Duration	300 seconds

Typical CSER System entry conditions:		
Entry condition	Minimum	Maximum
Engine in EOM3 Mode		
Ambient Temperature	0 deg C	
Ambient Pressure	75 kPa	
Engine Coolant Temperature		50 deg C
Engine Soak Time	6 hr	
Engine Speed	750 rpm	2300 rpm
Engine Load (Torque)	50 Nm	700 Nm
Percentage of time with speed/torque conditions met	50%	
No Sensor Errors		
No Error in Air Path, EGR, Boost, Fuel Path, Fuel Quantity, Timing and Pressure Monitors		

ED_002078G_00001322-00540

Typical CSER System malfunction thresholds:
Modeled vs. Measured Post DOC Temperature Rise > 45 deg C.

Cold Start Emission Reduction Component Monitor

For all 2010 and subsequent model year vehicles that incorporate a specific engine control strategy to reduce cold start emissions, the OBD II system must monitor the components to ensure proper functioning. The monitor works by validating the operation of the components required to achieve the cold start emission reduction strategy, namely intake throttle and fuel balancing control.

Cold Throttle Valve Actuator Jammed Detection

Duplicate fault storage of throttle valve jammed detection exists, which can only set/clear in EOM3.

Cold Throttle Actuator Jammed Valve Check Operation:	
DTCs	P02E1 – Diesel Intake Air Flow Control Performance,
Monitor execution	Continuous
Monitor Sequence	None
Monitoring Duration	5 seconds to register a malfunction

Typical Cold Throttle Actuator Jammed Valve Entry Conditions:

See Throttle Valve Actuator Jammed Detection

Engine Operating mode is EOM3

Typical Cold Throttle Jammed Valve Check (P02E1) Malfunction Thresholds:
A P02E1 is set in EOM3.

Cold EGR Valve Actuator Jammed Detection

Duplicate fault storage of EGR valve jammed detection exists, which can only set/clear in EOM3.

EGR Valve Jammed Check Operation:	
DTCs	P042E – Exhaust Gas Recirculation "A" Control Stuck Open
Monitor execution	Continuous
Monitor Sequence	None
Monitoring Duration	5 seconds to register a malfunction

Typical Actuator Jammed Valve Entry Conditions:
See EGR Valve Actuator Jammed Detection
Engine Operating mode is EOM3

Typical EGR Valve Jammed Check (P042E) Malfunction Thresholds:
A P042E is set in EOM3.

ED_002078G_00001322-00541

Cold FBC (Only Chassis Cert Applications)

Fuel Balancing Control is an algorithm designed to reduce differences in injected fuel quantity from cylinder to cylinder. The increase in crankshaft speed due to individual cylinder combustion events is measured. The amount of fuel injected to each cylinder is then adjusted up or down to minimize the difference in increase in crankshaft speed from cylinder to cylinder. The total amount of fuel injected among all cylinders remains constant. The Cold FBC runs exactly the same as the normal FBC monitor, only difference is that it will run during EOM3 instead of EOM0. The concept is shown in the graphic below.

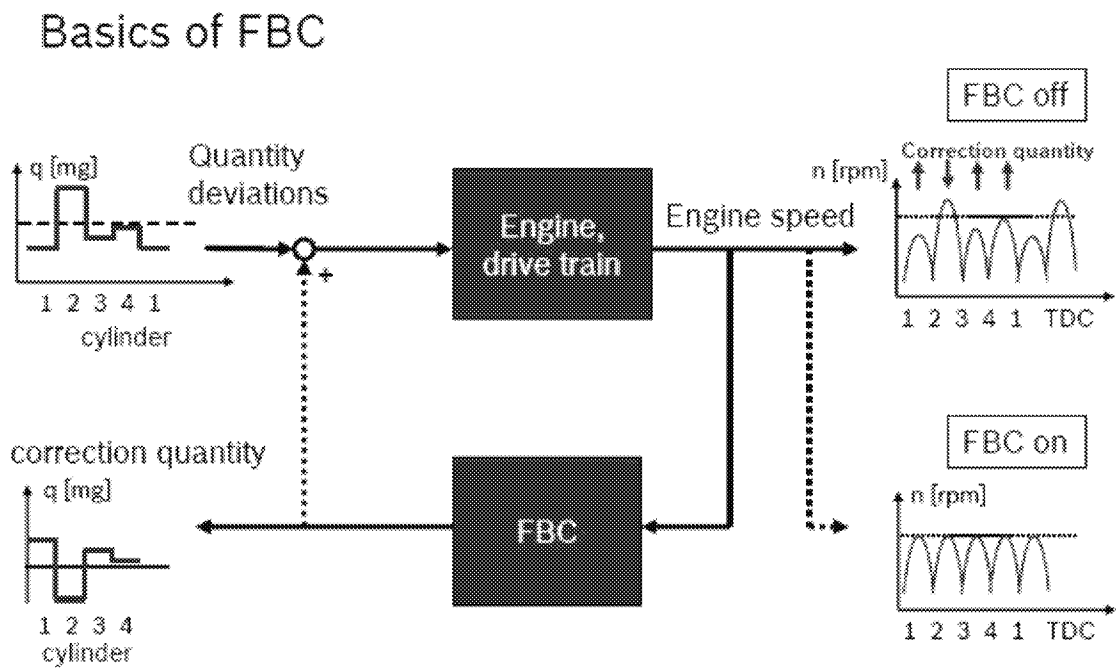

FBC operates in closed-loop control in an engine speed range of 500-3000 RPM, and a commanded injection quantity of 3.5 – 90 mg/stroke. The maximum allowed correction in fuel quantity for an individual cylinder is given by the following table.

ED_002078G_00001322-00542

CSER Component Monitor: Cold FBC Control Limits:			
	Injection quantity requested before FBC correction (mg/stroke)		
	3.5	7.5	15
Maximum allowable FBC correction (mg/stroke):	4	8	15

When the current correction for a given cylinder exceeds 90% of the allowable correction for the current conditions, a code is set.

CSER Component Monitor: Cold FBC Monitor Operation:	
DTCs	P0263 – Cylinder #1 Contribution/Balance P0266 – Cylinder #2 Contribution/Balance P0269 – Cylinder #3 Contribution/Balance P0272 – Cylinder #4 Contribution/Balance P0275 – Cylinder #5 Contribution/Balance P0278 – Cylinder #6 Contribution/Balance P0281 – Cylinder #7 Contribution/Balance P0284 – Cylinder #8 Contribution/Balance
Monitor Execution	P0263 – During EOM3 after a cold start P0266 – During EOM3 after a cold start P0269 – During EOM3 after a cold start P0272 – During EOM3 after a cold start P0275 – During EOM3 after a cold start P0278 – During EOM3 after a cold start P0281 – During EOM3 after a cold start P0284 – During EOM3 after a cold start
Monitor Sequence	None
Sensors OK	Crankshaft Position Sensor "A" Circuit (P0335) Crankshaft Position Sensor "A" Circuit Range/Performance (P0336)
Typical Monitoring Duration	10 sec

Typical CSER Component Monitor: Cold FBC Monitor Entry Conditions:		
Entry condition	Minimum	Maximum
EOM3 Active		
Engine speed	500 rpm	3000 rpm
Injection quantity	3.5 mg/stroke	90 mg/stroke
Engine Temperature		
Barometric Pressure		
FBC wheel learn complete		

Typical CSER Component Monitor: Cold FBC Monitor Malfunction Thresholds:
If the current correction for the injector exceeds 90% of the allowable correction for current operation conditions, the code is set.

ED_002078G_00001322-00543

Air Temperature Rationality Test

An air temperature rationality test is performed once every drive cycle, after a long soak of 6 hours or greater. At key on, a temperature sample is taken of each of the following sensors: Ambient Air (AAT), Intake Air (IAT), Charge Air Cooler outlet (CACT1), EGR Cooler outlet (EGT COT), and Secondary Coolant Temperature (ECT2). Once a cold start has been confirmed, the temperature samples are compared against each other, and the temperature differences compared against a threshold. One sensor must fail plausibility with all four other sensors to set a fault for the sensor in question. If one or more sensors fail plausibility with three or fewer sensors, a general temperature plausibility fault is set. If a block heater has been detected, or if any sensor has been flagged for a pending signal range malfunction, the plausibility check is not performed.

ED_002078G_00001322-00544

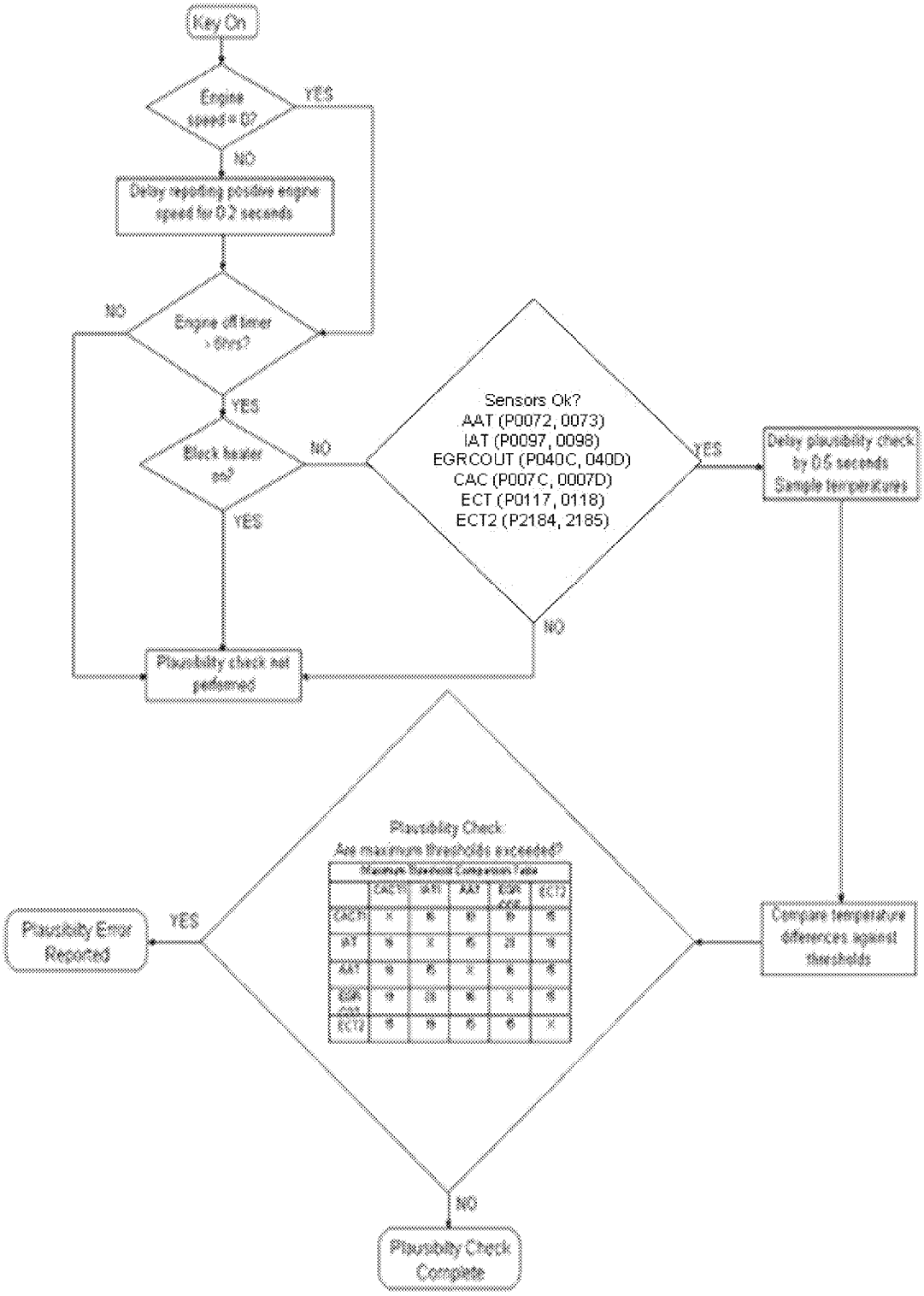

Figure : Air Temperature Plausibility Check Flow Chart

ED_002078G_00001322-00545

Ambient Air Temperature (AAT) Sensor Circuit Check:	
DTCs	P0072 – Ambient Air Temperature Circuit Low P0073 – Ambient Air Temperature Sensor Circuit High
Monitor Execution	Continuous
Monitor Sequence	None
Sensors OK	Not applicable
Typical Monitoring Duration	2 sec.

Typical Ambient Air Temperature Sensor Circuit Check Entry Conditions:		
Entry Condition	Minimum	Maximum
Battery Voltage	9 V	16.25 V
Key On		

Typical Ambient Air Temperature Sensor Circuit Check Malfunction Thresholds:
Voltage < 0.10 V (-40 deg C) or voltage > 4.99 V (108 deg C)

Ambient Air Temperature Physical Range Check

A physical range check of ambient air temperature is performed on each drive cycle. It compares the measured value of ambient air temperature to a threshold of 72 deg C, if the threshold is exceeded a fault is detected.

Ambient Air Temperature (AAT) Sensor Physical Range Check:	
DTCs	P0070 - Ambient Air Temperature Circuit
Monitor Execution	Continuous
Monitor Sequence	None
Sensors OK	AAT (P0072, P0073),
Typical Monitoring Duration	4 seconds

Typical Ambient Air Temperature Sensor Plausibility Check Entry Conditions:		
Entry Condition	Minimum	Maximum
Battery Voltage	9 V	16.25 V
Key On		

Typical Ambient Air Temperature Sensor Plausibility Check Malfunction Thresholds:
If AAT > 72 deg C for 4 seconds a fault is detected and the code is set.

ED_002078G_00001322-00546

Ambient Air Temperature Rationality Check	
DTCs	P0071 – Ambient Air Temperature Sensor Range/Performance
Monitor Execution	Once per driving cycle. The check is disabled if a block heater is in use.
Monitor Sequence	None
Sensors OK	AAT (P0072, P0073), IAT1 (P0112, P0113), EGT11 (P0548, P0549), EGRCOT (P040D, P040C), ECT (P0117, P0118), EOT (P0197, P0198), CACT1 (P007C, P007D)
Typical Monitoring Duration	0.5 sec

Typical Ambient Air Temperature Rationality Check Entry Conditions:		
Entry Condition	Minimum	Maximum
Engine Off Time	6 hrs	N/A
Engine coolant temperature	-35 deg C	121 deg C

Typical Ambient Air Temperature Rationality Check Thresholds:	
AAT Rationality is confirmed against 4 other sensors (absolute temperature difference thresholds):	
CACT1	10 deg C
IAT1	15 deg C
EGRCOT	16 deg C
ECT2	20 deg C

ED_002078G_00001322-00547

Ambient Air Temperature Plausibility Check

An air temperature vs. environmental temp plausibility check is performed on each drive cycle. It compares the absolute difference of IAT1 and AAT, if the difference is greater than 55C for 5 minutes and vehicle speed is above 80.5 km/h when coolant temp is less than 100 deg C, a fault is detected.

Ambient Air Temperature (AAT) Sensor Plausibility Check:	
DTCs	P009A - Intake Air Temperature /Ambient Air Temperature Correlation
Monitor Execution	Continuous
Monitor Sequence	None
Sensors OK	Not applicable
Typical Monitoring Duration	5 minutes

Typical Ambient Air Temperature Sensor Plausibility Check Entry Conditions:		
Entry Condition	Minimum	Maximum
Battery Voltage	9 V	16.25 V
Vehicle Speed	80.5 km/h	
IAT1 Temp	-40 deg C	121 deg C
Coolant Temp	-40 deg C	100 deg C
Environmental Temp	-40 deg C	80 deg C
Key On		

Typical Ambient Air Temperature Sensor Plausibility Check Malfunction Thresholds:
If IAT1 – AAT > 55 deg C for 5 minutes, a fault is detected and the code is set.

Charge Air Cooler (CACT1) Sensor Circuit Check:	
DTCs	P007C – Charge Air Cooler Temperature Sensor Circuit Low P007D – Charge Air Cooler Temperature Sensor Circuit High
Monitor execution	Continuous
Monitor Sequence	None
Sensors OK	Not applicable
Typical Monitoring Duration	4 sec

Typical Charge Air Cooler Temperature Sensor Circuit Check Malfunction Thresholds:
Voltage < 0.092 V (161 deg C) or voltage > 4.90 V (-43 deg C)

Charge Air Cooler Temperature (CACT1) Rationality Check:	
DTCs	P007B - Charge Air Cooler Temperature Sensor Circuit Range/Performance
Monitor Execution	Once per drive cycle. The check is disabled if a block heater is in use.
Monitor Sequence	None
Sensors OK	AAT (P0072, P0073), IAT1 (P0112, P0113), EGT11 (P0548, P0549), EGRCOT (P040D, P040C), ECT (P0117, P0118), EOT (P0197, P0198), CACT1 (P007C, P007D)
Typical Monitoring Duration	0.5 sec

Typical Charge Air Cooler Temperature Rationality Check Entry Conditions:		
Entry Condition	Minimum	Maximum
Engine Off Time	6 hrs	
Coolant Temp	-35 deg C	121 deg C

Typical Charge Air Cooler Temperature Functional Thresholds:	
CACT1 Rationality is confirmed against 4 other sensors (absolute temperature difference thresholds):	
AAT	10 deg C
IAT1	16 deg C
EGRCOT	19 deg C
ECT2	20 deg C

Intake Air Temperature (IAT) Sensor Circuit Check:	
DTCs	P0112 - Intake Air Temperature Sensor Circuit Low P0113 - Intake Air Temperature Sensor Circuit High
Monitor Execution	Continuous
Monitor Sequence	None
Sensors OK	Not applicable
Typical Monitoring Duration	4 sec.

Typical Intake Air Temperature Sensor Circuit Check Malfunction Thresholds:
Voltage < 0.10 volts (137 deg C) or voltage > 4.91 volts (-25 deg C)

Intake Air Temperature Rationality Check	
DTCs	P0111 – Temperature Sensor Circuit Range/Performance
Monitor Execution	Once per drive cycle. The check is disabled if a block heater is in use.
Monitor Sequence	None
Sensors OK	AAT (P0072, P0073), IAT1 (P0112, P0113), EGT11 (P0548, P0549), EGRCOT (P040D, P040C), ECT (P0117, P0118), EOT (P0197, P0198), CACT1 (P007C, P007D)
Typical Monitoring Duration	0.5 sec

Typical Intake Air Temperature Rationality Check Entry Conditions:		
Entry Condition	Minimum	Maximum
Engine Off Time	6 hrs	
Coolant Temp	-35 deg C	121 deg C

Typical Intake Air Temperature Functional Thresholds:	
IAT Rationality is confirmed against 4 other sensors (absolute temperature difference thresholds):	
AAT	15 deg C
CACT1	16 deg C
EGTCOT	20 deg C
ECT2	20 deg C

EGR Cooler Downstream Temperature (EGR COT) Sensor Circuit Check:	
DTCs	P040C – Exhaust Gas Recirculation Temperature Sensor Circuit Low P040D – Exhaust Gas Recirculation Temperature Sensor Circuit High
Monitor execution	Continuous
Monitor Sequence	None
Sensors OK	Not applicable
Typical Monitoring Duration	3 sec.

Typical EGR Cooler Downstream Temperature Sensor Circuit Check Malfunction Thresholds:
Voltage < 0.10 volts (961 deg C) or voltage > 4.90 volts (-46 deg C)

ED_002078G_00001322-00550

EGR Cooler Downstream Temperature Rationality Check	
DTCs	P040B – Exhaust Gas Recirculation Temperature Sensor Circuit Range/Performance
Monitor Execution	Once per drive cycle. The check is disabled if a block heater is in use.
Monitor Sequence	None
Sensors OK	AAT (P0072, P0073), IAT1 (P0112, P0113), EGT11 (P0548, P0549), EGRCOT (P040D, P040C), ECT (P0117, P0118), EOT (P0197, P0198), CACT1 (P007C, P007D)
Typical Monitoring Duration	0.5 sec

Typical EGR Cooler Downstream Temperature Rationality Check Entry Conditions:		
Entry Condition	Minimum	Maximum
Engine Off Time	6 hrs	
Coolant Temp	-35 deg C	121 deg C

Typical EGR Cooler Downstream Temperature Functional Thresholds:	
EGRCOT Rationality is confirmed against 4 other sensors (absolute temperature difference thresholds):	
AAT	16 deg C
CACT1	19 deg C
IAT1	20 deg C
ECT2	20 deg C

Secondary Engine Coolant Temperature (ECT2) Sensor Circuit Check:	
DTCs	P2184 - Engine Coolant Temperature Sensor 2 Circuit Low P2185 - Engine Coolant Temperature Sensor 2 Circuit High
Monitor execution	Continuous
Monitor Sequence	None
Sensors OK	Not Applicable
Typical Monitoring Duration	2 sec.

Typical Secondary Engine Coolant Temperature Sensor Circuit Check Entry Conditions:		
Entry condition	Minimum	Maximum
Key On		
Battery Voltage	9 V	16.25 V

Typical Secondary Engine Coolant Temperature Sensor Circuit Check Malfunction Thresholds:
Voltage < 0.10 (163 deg C) volts or voltage > 4.91 volts (-44 deg C)

ED_002078G_00001322-00551

Secondary Engine Coolant Temperature Rationality Check	
DTCs	P2182 – Engine Coolant Temperature Sensor 2 Circuit
Monitor Execution	Once per drive cycle. The check is disabled if a block heater is in use.
Monitor Sequence	None
Sensors OK	AAT (P0072, P0073), IAT1 (P0112, P0113), EGT11 (P0548, P0549), EGRCOT (P040D, P040C), ECT (P0117, P0118), EOT (P0197, P0198), CACT1 (P007C, P007D)
Typical Monitoring Duration	0.5 sec

Typical Secondary Engine Coolant Temperature Rationality Check Entry Conditions:		
Entry Condition	Minimum	Maximum
Engine Off Time	6 hrs	
Coolant Temp	-35 deg C	121 deg C

Typical Secondary Engine Coolant Temperature Functional Thresholds:	
ECT2 Rationality is confirmed against 4 other sensors (absolute temperature difference thresholds):	
AAT	20 deg C
CACT1	20 deg C
IAT1	20 deg C
EGRCOT	20 deg C

ED_002078G_00001322-00552

Barometric Pressure and Manifold Absolute Pressure

Barometric Pressure (BP) Sensor Circuit Check:	
DTCs	P2227 – Barometric Pressure Sensor "A" Circuit Range/Performance P2228 – Barometric Pressure Circuit Low Input P2229 – Barometric Pressure Circuit High Input
Monitor Execution	Continuous
Monitor Sequence	None
Sensors OK	Not applicable
Typical Monitoring Duration	P2227 – 1 sec P2228, P2229 –.5 sec.

Typical Barometric Pressure Sensor Circuit Check Entry Conditions:		
Entry condition	Minimum	Maximum
Battery voltage (IVPWR)	9 V	16.25 V

Typical Barometric Pressure Sensor Circuit Check Malfunction Thresholds:
P2227 – Observed pressure less than 50 kPa
P2228 - Voltage less than 0.25 V. (6.3 kPa)
P2229 - Voltage greater than 4.85 V. (115 kPa)

Manifold Absolute Pressure (MAP) Sensor Circuit Check:	
DTCs	P0107 - Manifold Absolute Pressure/BARO Sensor Low Input P0108 - Manifold Absolute Pressure/BARO Sensor High Input
Monitor Execution	Continuous
Monitor Sequence	None
Sensors OK	Not applicable
Typical Monitoring Duration	P0107, P0108 - 2 sec.

Typical Manifold Absolute Pressure Sensor Circuit Check Entry Conditions:		
Entry condition	Minimum	Maximum
Key-on		
Battery voltage (IVPWR)	9 V	16.25 V

Typical Manifold Absolute Pressure Sensor Circuit Check Malfunction Thresholds:
P0107 – Voltage less than .1 V (50 kPa)
P0108 – Voltage greater than 4.745 V (390 kPa)

Manifold Absolute Pressure (MAP) / Barometric Pressure (BP) Rationality Check:	
DTCs	P0069 – MAP/BARO Correlation
Monitor Execution	Once per trip
Monitor Sequence	None
Sensors OK	BARO (P2228, P2229), MAP (P0107, P0108)
Typical Monitoring Duration	1.5 sec.

Typical MAP / BP Rationality Check Entry Conditions:		
Entry condition	Minimum	Maximum
P0069 - MAP / BARO Correlation:		
Key-on		
Battery voltage (IVPWR)	9 V	16.25 V
Engine Speed (N)	0 rpm	437.5 rpm

Typical MAP / BP Rationality Check Malfunction Thresholds:
P0069 - The difference between MAP and BARO is greater than 4.5 kPa, or less than -8 kPa.

ED_002078G_00001322-00554

Turbine Upstream Pressure Sensor Plausibility Checks

The turbine upstream pressure sensor has two plausibility checks to determine if the sensor is operating correctly. The first check looks for an offset in the turbine upstream pressure sensor when the engine is not running. This check compares the absolute value of the difference between the measured turbine upstream pressure and the measured environmental pressure under specific entry conditions. If the pressure difference exceeds the threshold, for a predetermined amount of time while the entry conditions are met, a fault is set.

Turbine Upstream Pressure Sensor Offset Plausibility Check Operation:	
DTCs	P0471– Exhaust Pressure Sensor "A" Circuit Range / Performance
Monitor execution	Continuous in with engine off.
Monitor Sequence	None
Monitoring Duration for stuck midrange	1.0 seconds to register a malfunction once entry conditions are met.

Turbine Upstream Pressure Sensor Offset Entry Conditions		
Entry Condition:	**Minimum**	**Maximum**
Turbine Upstream Pressure Sensor is not Frozen		
Ambient Pressure	74.5 kPa	
Ambient Air Temperature	5 deg C	
Coolant Temperature	5 deg C	
Engine Speed		0 rpm
Engine Off Time		10 sec.
No Turbine Upstream Pressure Sensor		

Typical Upstream Turbine Pressure Sensor Plausibility Check Malfunction Thresholds:
| Turbine Pressure Sensor – Ambient Pressure Sensor | > 7.5 kPa

The second check compares the measured pressure upstream of the turbine to a model of the pressure upstream of the turbine under specific entry conditions. If the difference between the measured and modeled pressure is greater than a threshold, for a predetermined amount of time while the entry conditions are met, a fault is set.

Turbine Upstream Pressure Sensor -Model Plausibility Check Operation:	
DTCs	P0474– Exhaust Pressure Sensor "A" Circuit Intermittent / Erratic
Monitor execution	Continuous when entry conditions are met.
Monitor Sequence	None
Monitoring Duration for stuck midrange	2.0 seconds to register a malfunction once entry conditions are met.

ED_002078G_00001322-00555

Turbine Upstream Pressure Sensor Offset Entry Conditions		
Entry Condition:	**Minimum**	**Maximum**
Turbine Upstream Pressure Sensor is not Frozen		
Coolant Temperature	50 deg C	
Engine Speed	1300 rpm	2400 rpm
Engine Torque	500 Nm	1400 Nm
Ambient Air Temperature	5 deg C	
Ambient Pressure	74.5 kPa	
Modeled Exhaust Pressure	147.5 kPa	620.0 kPa
Air Flow Gradient		140 g/s/step

Typical Upstream Turbine Pressure Sensor Plausibility Check Malfunction Thresholds:
(Turbine Pressure Model – Turbine Pressure Sensor) > 90.0 kPa

Upstream Turbine Pressure Sensor Signal Range Check

Reductant Pressure Sensor Open/Short Check Operation:	
DTCs	P0472 - Exhaust Pressure Sensor "A" Circuit Low P0473 - Exhaust Pressure Sensor "A" Circuit High
Monitor execution	Continuous
Monitor Sequence	none
Sensors OK	none
Monitoring Duration	2 seconds to register a malfunction

Typical Reductant Pressure Sensor Check Malfunction Thresholds:
Pressure sensor voltage < 0.100 volts or Pressure sensor voltage > 4.8 volts

ED_002078G_00001322-00556

EGR Valve Position Sensor

Analog inputs checked for opens or shorts by monitoring the analog -to-digital (A/D) input voltage.

EGR Valve Position Sensor Check Operation:	
DTCs	P0405 (EGR Sensor "A" Circuit Low) P0406 (EGR Sensor "A" Circuit High)
Monitor execution	continuous
Monitor Sequence	none
Sensors OK	not applicable
Monitoring Duration	3 seconds to register a malfunction

Typical EGR Valve position sensor check malfunction thresholds (P0405,P0406):
Voltage < 0.30 volts or Voltage > 4.70 volts

Throttle Position Sensor

Analog inputs checked for opens or shorts by monitoring the analog -to-digital (A/D) input voltage.

Throttle Position Sensor Check Operation:	
DTCs	P02E9 (Diesel Intake Air Flow Position Circuit High), P02E8 (Diesel Intake Air Flow Position Circuit Low).
Monitor execution	continuous
Monitor Sequence	none
Sensors OK	not applicable
Monitoring Duration	3 seconds to register a malfunction

Typical TP sensor check malfunction thresholds (P02E8,P02E9):
Voltage < 0.08 volts or Voltage > 4.92 volts

EGR Downstream Temperature Sensor Dynamic Plausibility Check

Dynamic plausibility of the EGR downstream temperature sensor is checked using the EGR cooler monitor.

ED_002078G_00001322-00558

Engine Coolant & Engine Oil Correlation

The engine coolant temperature sensor reading and engine oil temperature sensor readings are tested for plausibility once per drive cycle after a long soak (6hrs or more). The values of the coolant and oil temperature sensor readings are recorded at start up. Once it has been determined that the enable conditions have been achieved, upper and lower thresholds are determined based on the engine-off time. The difference of the initial oil and coolant temperatures are compared to this threshold. If the lower threshold is not achieved, a fault is reported. If the lower threshold is met, but the upper threshold is not achieved and a block heater is not in use, a fault is reported. If a block heater is detected and the diference is greater than 40C, a fault is reported.

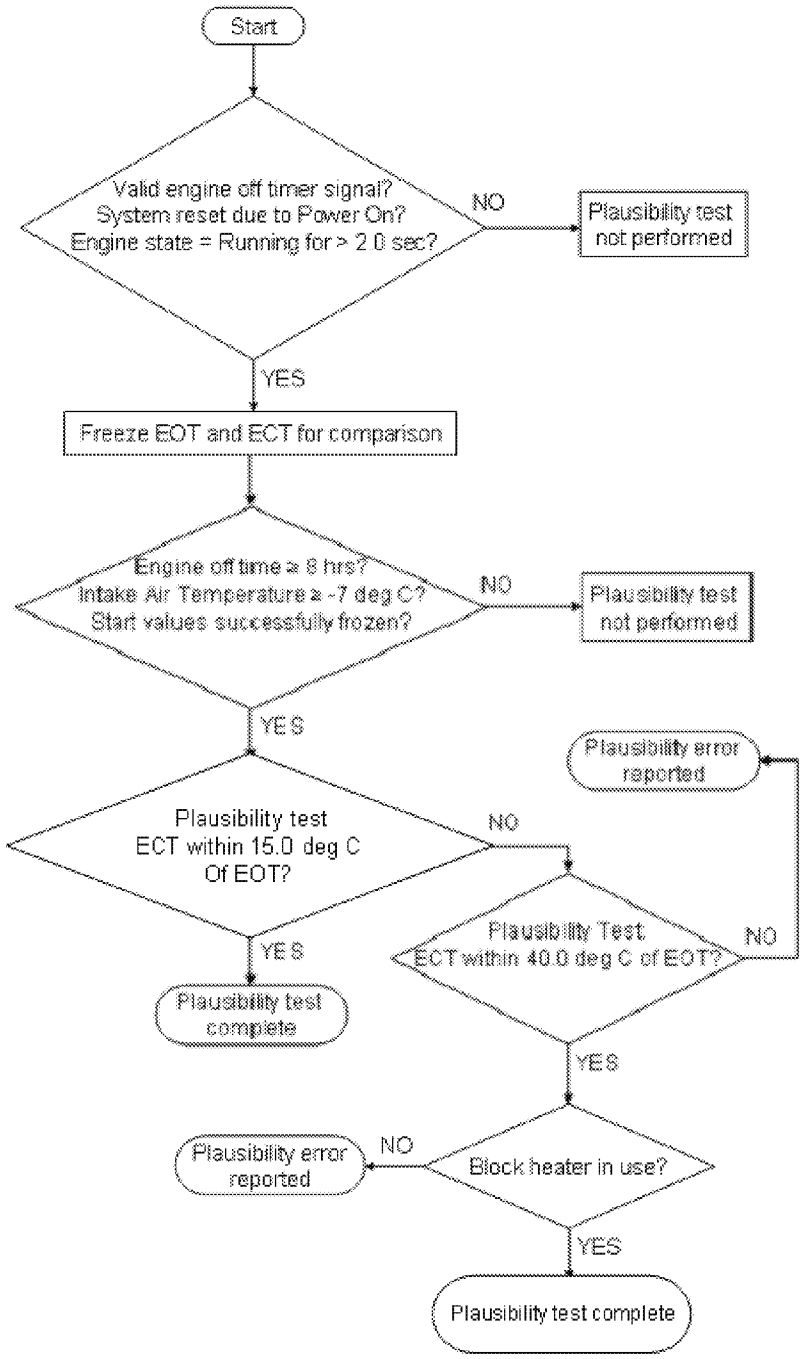

Figure #: ECT/EOT Plausibility Correlation Test Flow Chart

ED_002078G_00001322-00559

Engine Coolant Temperature (ECT) Sensor Circuit Check:	
DTCs	P0117 - Engine Coolant Temperature Sensor Circuit Low P0118 - Engine Coolant Temperature Sensor Circuit High
Monitor execution	Continuous
Monitor Sequence	None
Sensors OK	Not Applicable
Typical Monitoring Duration	2 sec.

Typical Engine Coolant Temperature Sensor Circuit Check Entry Conditions:		
Entry condition	Minimum	Maximum
Key On		
Battery Voltage	9 V	16.25 V

Typical Engine Coolant Temperature Sensor Circuit Check Malfunction Thresholds:
Voltage < 0.10 (163 deg C) volts or voltage > 4.91 volts (-44 deg C)

Engine Coolant Temperature Rationality Check	
DTCs	P012F – Engine Coolant Temperature / Engine Oil Temperature Correlation
Monitor Execution	Once per drive cycle.
Monitor Sequence	None
Sensors OK	AAT (P0072, P0073), IAT1 (P0112, P0113), ECT (P0117, P0118), EOT (P0197, P0198)
Typical Monitoring Duration	Immediate when conditions exist

Typical Engine Coolant Temperature Rationality Check Entry Conditions:		
Entry Condition	Minimum	Maximum
Engine Off Time	6 hrs	
Intake Air Temp	-7 deg C	
Engine “Running” Time	2 sec	

Typical Engine Coolant Temperature Functional Thresholds:	
ECT Rationality is confirmed against EOT:	
Absolute Temperature Difference	15 deg C

ED_002078G_00001322-00560

Engine Coolant Temperature in range Rationality Check	
DTCs	P0196 –Engine Oil Temperature Sensor Range/Performance
Monitor Execution	Once per drive cycle.
Monitor Sequence	None
Sensors OK	ECT (P0117, P0118), EOT (P0197, P0198)
Typical Monitoring Duration	Immediate when conditions exist

Typical Engine Coolant Temperature Rationality Check Entry Conditions:		
Entry Condition	Minimum	Maximum
Engine Off Time	6 hrs	
Engine Coolant Temp	70C	

Typical Engine Coolant Temperature Functional Thresholds:	
ECT Rationality is confirmed against EOT:	
Absolute Temperature Difference	35 deg C

Engine Oil Temperature (EOT) Sensor Circuit Check:	
DTCs	P0197 - Engine Oil Temperature Sensor Circuit Low P0198 - Engine Oil Temperature Sensor Circuit High
Monitor execution	Continuous
Monitor Sequence	None
Sensors OK	Not Applicable
Typical Monitoring Duration	2 sec.

Typical Engine Oil Temperature Sensor Circuit Check Entry Conditions:		
Entry condition	Minimum	Maximum
Key On		
Battery Voltage	9 V	16.25 V

Typical Engine Oil Temperature Sensor Circuit Check Malfunction Thresholds:
Voltage < 0.10 (163 deg C) volts or voltage > 4.91 volts (-44 deg C)

Engine Coolant System Leak Check:	
DTCs	P2560 - Engine Oil Temperature Sensor Circuit Low
Monitor execution	Continuous
Monitor Sequence	None
Sensors OK	ECT and OIL temp.

Typical Monitoring Duration	5 sec.

Typical Engine Oil Temperature Sensor Circuit Check Entry Conditions:		
Entry condition	Minimum	Maximum
Engine Oil Temp	70C	

Typical Engine Oil Temperature Sensor Circuit Check Malfunction Thresholds:
Oil Temperature is greater then coolant temperature by 50C

ED_002078G_00001322-00562

Cam and Crank Sensor:

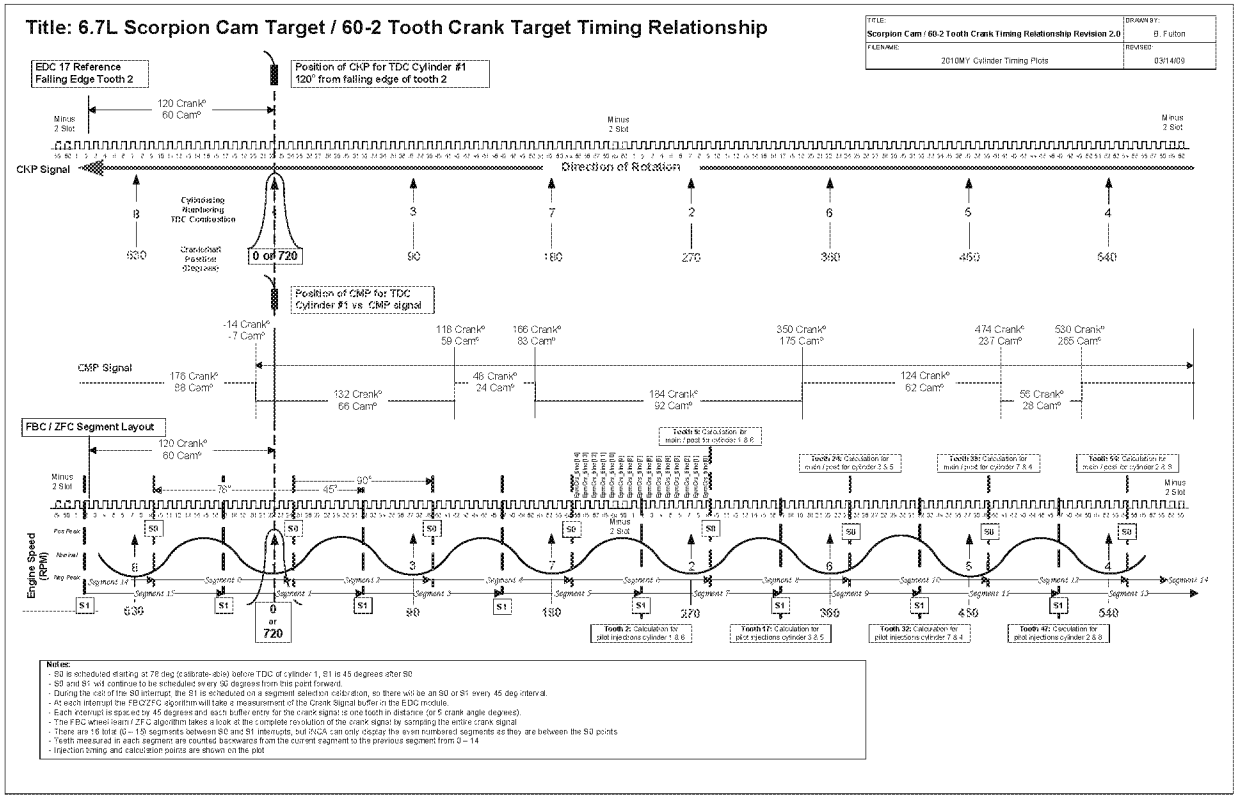

Camshaft and Crankshaft Sensor Monitor Operation:	
DTCs	P0016 – Crankshaft Position - Camshaft Position Correlation (Bank 1 Sensor A) P0315 – Crankshaft Position System Variation Not Learned P0335 – Crankshaft Position Sensor "A" Circuit P0336 – Crankshaft Position Sensor "A" Circuit Range/Performance P0340 – Camshaft Position Sensor "A" Circuit (Bank 1 or single sensor) P0341 – Camshaft Position Sensor "A" Circuit Range/Performance (Bank 1 or single sensor)
Monitor Execution	P0016 – Continuous P0315 – Continuous P0335 – Continuous P0336 – Continuous P0340 – Continuous P0341 – Continuous
Monitor Sequence	None
Sensors OK	P0016 – Sensor Supply Voltage 1 (P06A6), Sensor Supply Voltage 2 (P06A7) P0315 – Sensor Supply Voltage 1 (P06A6), Crankshaft Sensor (P0335, P0336) P0335 – Sensor Supply Voltage 1 (P06A6) P0336 – Sensor Supply Voltage 1 (P06A6) P0340 – Sensor Supply Voltage 2 (P06A7) P0341 – Sensor Supply Voltage 2 (P06A7)
Typical Monitoring Duration	P0016 – 3.6 sec ,P0315 – 5000 sec of overrun/decel fuel shut-off P0335 – 1.8 sec, P0336 – 1.8 sec, P0340 – 3 sec, P0341 – 1.2 sec

Typical Camshaft and Crankshaft Sensor Monitor Entry Conditions:

Entry condition	Minimum	Maximum
P0016 – Engine running or cranking		
P0315 – Overrun/decel fuel shut-off		
P0335 – Engine running or cranking		
P0336 – Engine running or cranking		
P0340 – Engine running or cranking		
P0341 – Engine running or cranking		

Typical Camshaft Sensor Monitor Malfunction Thresholds:
P0016 – If the location of the gap on the crankshaft sensor wheel occurs at a location on the camshaft sensor wheel that is more than 6 degrees from the expected location for two detection attempts, the code is set
P0315 – If after 5000 total seconds of overrun/decel fuel shut-off, the system has been unable to learn crankshaft wheel deviation corrections, the code is set
P0335 – If no signal is detected from the crankshaft sensor, the code is set
P0336 – If the gap in the 60-2 tooth wheel is not detected for three revolutions, the code is set
P0340 – If no signal is detected from the camshaft sensor, the code is set
P0341 – If the segment profile detected does not match the segment profile shown in the figure above, the code is set

ED_002078G_00001322-00564

Mass Air Meter

The 6.7L engine utilizes a frequency-based hot film air meter. The digital output varies its period to indicate a change in mass air flow. If the period is outside of a specified range, a fault is detected and the appropriate P-code is set.

MAF Sensor Circuit Check:	
DTCs	P0100 – Mass or Volume Air Flow "A" Circuit P0102 – Mass or Volume Air Flow "A" Circuit Low P0103 – Mass or Volume Air Flow "A" Circuit High
Monitor Execution	Continuous
Monitor Sequence	None
Sensors OK	Not applicable
Typical Monitoring Duration	P0100 – 1.5 sec P0102 – 2 sec P0103 – 2 sec

MAF Sensor Circuit Check Entry Conditions:		
Entry condition	Minimum	Maximum
Battery voltage	9 V	16.25 V
Key on		

MAF Sensor Circuit Check Malfunction Thresholds:
P0100 – hard coded, not visible in software
P0102 – period less than 62 us
P0103 – period greater than 4000 us

ED_002078G_00001322-00565

MAF Rationality Check

A rationality check of the mass air flow sensor is performed each time an air mass adaption (AMA) executes. AMA adapts at two points- one at idle, the other at a specific speed/load. The ratio between the mass air flow and the reference mass air flow is calculated with the EGR valve commanded to the closed position. The release of this plausibility check occurs under strict engine operating and environmental conditions to minimize the affect of outside influences on mass air flow. At each AMA event, the corrected value is stored for each point. These stored values are compared to a threshold, if the stored values are greater than a threshold a fault is detected, as the air meter has drifted outside of its nominal operating range.

In addition to the stored values, the corrected airflow is compared to directly to the modeled airflow during AMA. If the ratio of the corrected airflow and the modeled airflow is less than the threshold, a fault is detected.

The following figure outlines the strategy for the rationality checks.

ED_002078G_00001322-00566

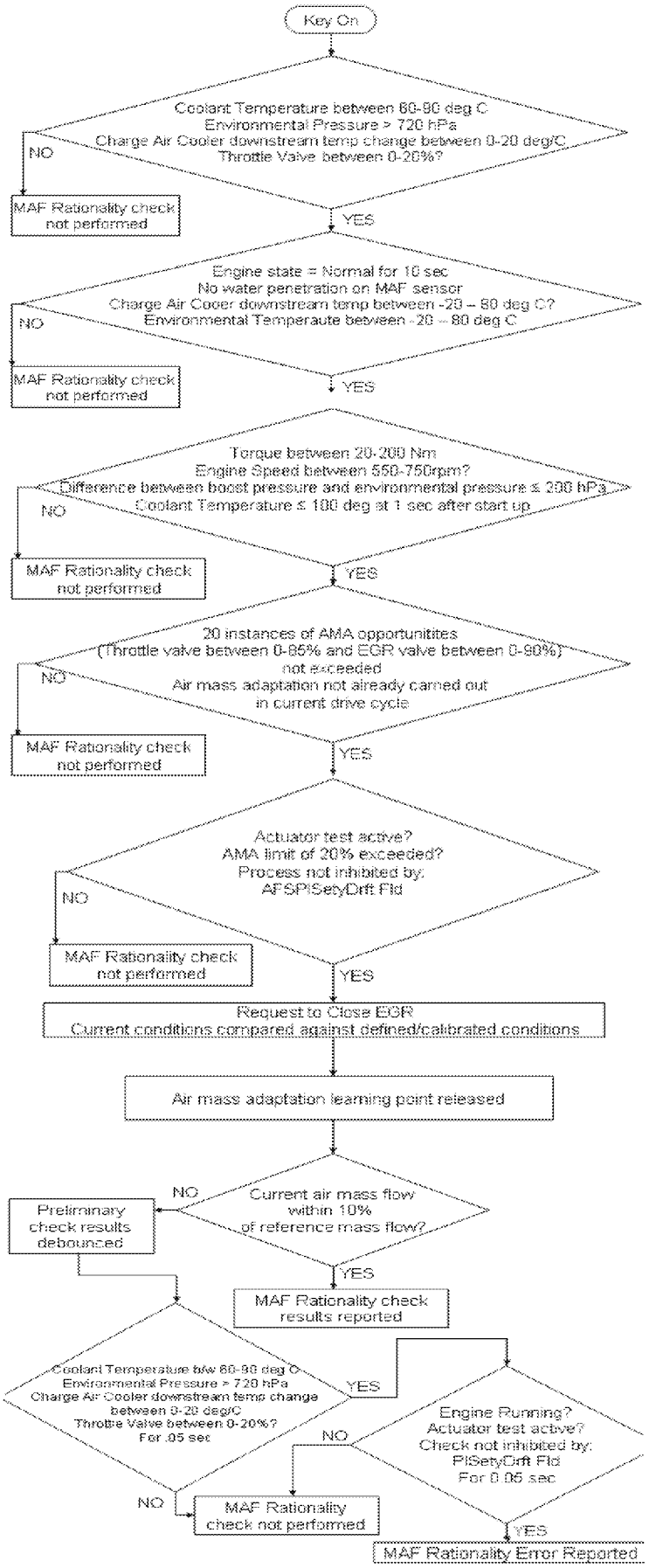
Key On
Coolant Temperature between 60-90 deg C
Environmental Pressure > 720 hPa
Charge Air Cooler downstream temp change between 0-20 deg/C
Throttle Valve between 0-20%?
NO
MAF Rationality check not performed
YES
Engine state = Normal for 10 sec
No water penetration on MAF sensor
Charge Air Cooler downstream temp between -20 – 80 deg C?
Environmental Temperaute between -20 – 80 deg C
NO
MAF Rationality check not performed
YES
Torque between 20-200 Nm
Engine Speed between 550-750rpm?
Difference between boost pressure and environmental pressure ≤ 200 hPa
Coolant Temperature ≤ 100 deg at 1 sec after start up
NO
MAF Rationality check not performed
YES
20 instances of AMA opportunitites
(Throttle valve between 0-85% and EGR valve between 0-90%)
not exceeded
Air mass adaptation not already carried out
in current drive cycle
NO
MAF Rationality check not performed
YES
Actuator test active?
AMA limit of 20% exceeded?
Process not inhibited by:
AFSPISetyOrft Fld
NO
MAF Rationality check not performed
YES
Request to Close EGR
Current conditions compared against defined/calibrated conditions
Air mass adaptation learning point released
Current air mass flow
within 10%
of reference mass flow?
NO
Preliminary check results debounced
YES
MAF Rationality check results reported
Coolant Temperature b/w 60-90 deg C
Environmental Pressure > 720 hPa
Charge Air Cooler downstream temp change
between 0-20 deg/C
Throttle Valve between 0-20%?
For .05 sec
YES
NO
Engine Running?
Actuator test active?
Check not inhibited by:
PISetyOrft Fld
For 0.05 sec
NO
MAF Rationality check not performed
YES
MAF Rationality Error Reported

Mass Air Flow Sensor Functional Check Operation:	
DTCs	P2073 – Manifold Absolute Pressure/Mass Air Flow - Throttle Position Correlation at Idle P2074 – Manifold Absolute Pressure/Mass Air Flow - Throttle Position Correlation at Higher Load P00BC – Mass or Volume (MAF/VAF) Air Flow "A" Circuit Range/Performance – Air Flow Too Low P2074 – (AMA maturity)
Monitor Execution	Once per drive cycle
Monitor Sequence	None.
Sensors OK	MAF (P0100, P0101, P0102), BP (P2228, P2229), EGRP (P0405, P0406, P0404, P0042E, P042F, P1335),
Typical Monitoring Duration	5 Seconds

Typical Mass Air Flow Sensor Functional Check Entry Conditions:		
Entry condition	Minimum	Maximum
Barometric Pressure	74.5 kPa	110 kPa
Engine Coolant Temperature	70 deg C	112 deg C
Throttle Valve	0%	20%
CAC Downstream Temperature	-20 deg C	80 deg C
Ambient Air Temperature	-20 deg C	80 deg C
Time engine running Normal	10 seconds	
No Water Penetration Detected in Sensor		
Engine Coolant Temperature at 1 second after key on		100 deg C
Difference in Barometric Pressure versus Pressure in Induction Volume		20 kPa
Engine Torque	20 Nm	200 Nm
Engine Speed	500 rpm	760 rpm

Typical Mass Air Flow Sensor Functional Check Malfunction Thresholds:
P2073, P2074 - If the final AMA stored value in either the idle or higher load cell is greater than 20% or less than -20%, a fault is detected and the appropriate P-code is set. P00BC - Corrected measured airflow / Modeled airflow < 0.7 P2074 – If the algorithm cannot learn a stable value for AMA within 10 learning events, this code is set.

Air Path Leakage Check

Similar to the mass air flow sensor functional check diagnostics, a rationality check of the mass air flow sensor is performed each time an air mass adaption (AMA) executes which is used to detect instantaneous problems with the air path. At idle, the ratio between the mass air flow and the reference mass air flow is calculated with the EGR valve in the closed position. This ratio is compared against a threshold once AMA has been released. The release of this plausibility check occurs under strict engine operating and environmental conditions to minimize the affect of outside influences on mass air flow. The ratio has an upper and lower limit, and the monitor runs once per drive cycle. A ratio too high indicates a post-turbocharger compressor air path leak, while a ratio too low indicates an EGR valve that is no longer sealing effectively.

Air Path Leakage Check Operation:	
DTCs	P00BC – Mass or Volume (MAF/VAF) Air Flow A Circuit Range/Performance – Air Flow Too Low P00BD - Mass or Volume (MAF/VAF) Air Flow A Circuit Range/Performance – Air Flow Too High
Monitor Execution	Once per drive cycle
Monitor Sequence	None.
Sensors OK	MAF (P0100, P0101, P0102), BP (P2228, P2229), EGRP (P0405, P0406, P0404, P0042E, P042F, P1335),
Typical Monitoring Duration	3 seconds

Typical Air Path Leakage Check Entry Conditions:		
Entry condition	Minimum	Maximum
Barometric Pressure	74.5 kPa	110 kPa
Engine Coolant Temperature	70 deg C	111 deg C
Throttle Valve	0%	20%
CAC Downstream Temperature	-20 deg C	80 deg C
Ambient Air Temperature	-20 deg C	80 deg C
Time engine running Normal	10 seconds	
No Water Penetration Detected in Sensor		
Engine Coolant Temperature at 1 second after key on		111 deg C
Difference in Barometric Pressure versus Pressure in Induction Volume		20 kPa
Engine Torque	20 Nm	200 Nm
Engine Speed	500 rpm	760 rpm
Turbocharger Position	75%	
EGR Valve Position		5.1%

ED_002078G_00001322-00569

Typical Air Path Leakage Check Malfunction Thresholds:
If the ratio between modeled airflow and measured uncorrected airflow is greater than 1.18 or less than .76 a fault is detected and the appropriate P-code is set.

ED_002078G_00001322-00570

Mass Air Flow Sensor Plausibility Check Operation:	
DTCs	P1102 – Mass Air Flow Sensor In Range But Lower Than Expected P1103 – Mass Air Flow Sensor In Range But Higher Than Expected
Monitor Execution	Continuous
Monitor Sequence	None.
Sensors OK	MAF (P0100, P0101, P0102), BP (P2228, P2229), EGRP (P0405, P0406, P0404, P0042E, P042F, P1335),
Typical Monitoring Duration	10 seconds

Typical Mass Air Flow Sensor Plausibility Check Entry Conditions:		
Entry condition	Minimum	Maximum
Barometric Pressure	75 kPa	110 kPa
Engine Coolant Temperature	70 deg C	121 deg C
Ambient Air Temperature	-20 deg C	80 deg C
Time engine running Normal	5 seconds	
Key On		

Typical Mass Air Flow Sensor Plausibility Check Malfunction Thresholds:
If Mass Air Flow is greater than the maximum AFS threshold map,, or less than the minimum AFS threshold map for 10 seconds, a fault is detected and a P-code is set.

Minimum AFS Threshold Map								
RPM	**400**	**600**	**1000**	**1500**	**2000**	**2500**	**3000**	**3500**
Airflow	**0**	**25**	**100**	**130**	**130**	**150**	**180**	**210**

Maximum AFS Threshold Map								
RPM	**600**	**750**	**1000**	**1500**	**2000**	**2500**	**3000**	**3500**
Airflow	**300**	**400**	**540**	**850**	**1100**	**1350**	**1550**	**1550**

Crankcase Ventilation Monitor

The 6.7L diesel engine has a crankcase ventilation separator mounted on the driver side rocker cover, with a tube connecting the separator to the fresh air inlet of the turbocharger. The tube on the separator side has a tamper proof collar installed and is plastic welded to the separator. On the fresh air inlet side, a hall effect sensor is present, to detect connection to the inlet casting assembly. The tube cannot be disconnected on the separator side, and if it is disconnected from the inlet casting, a P04DB code is set, as sensor output drops below a

ED_002078G_00001322-00571

calibrated threshold. There are also circuit range checks, P04E2 and P04E3 to detect shorts to ground, or short to battery/disconnected sensor, respectively.

Crankcase Ventilation Monitor	
DTCs	P04DB – Crankcase Ventilation System Disconnected P04E2 – Crankcase Ventilation Hose Connection Sensor Circuit Low P04E3 – Crankcase Ventilation Hose Connection Sensor Circuit High
Monitor Execution	Once per driving cycle – P04DB Continuous – P04E2, P04E3
Monitor Sequence	None
Sensors OK	P04DB - CVM (P04E2, P04E3)
Typical Monitoring Duration	2 sec

Typical Crankcase Ventilation Monitor Entry Conditions:		
Entry Condition	Minimum	Maximum
Coolant Temperature	70C	112 deg C
Ambient Temperature	-40C	70 deg C
Battery Voltage	9V	16.25V
Key is on		

Crankcase Ventilation Monitor Disconnection Check Malfunction Thresholds:
P04DB – voltage below 2500 mv for 2 seconds (all other entry conditions met, heals if voltage rises above 3000mv)

Crankcase Ventilation Monitor Circuit Check Malfunction Thresholds:
No minimum coolant, ambient temp entry conditions, continuous monitor: P04E2 – voltage less than 1000 mv for 2 seconds P01E3 – voltage greater than 4900 mv for 2 seconds

ED_002078G_00001322-00572

DEF Pressure Sensor

The DEF pressure control system uses the measured DEF pressure in a feedback control loop to achieve the desired DEF pressure. The DEF injection algorithm uses actual DEF pressure in its computation of DEF injector pulse width.

The DEF sensor is a gauge sensor. Its atmospheric reference hole is near the electrical connector. The DEF pressure sensor has a nominal range of 0 to 0.8 MPa (0 to 8 bar, 0 to 116 psi). This pressure range is above the maximum intended operating pressure of 0.5 MPa. The sensor voltage saturates at slightly above 0.5 and slightly below 4.5 volts.

DEF Pressure Sensor

DEF pressure is often a vacuum when the system purges after running. Vacuums cannot be measured by the DEF pressure gauge sensor as voltages will not be lower than 0.5 Volts.

DEF Pressure Sensor Transfer Function		
DEF Pump Pressure (PSI) = 29 * Voltage - 14.5		
Volts	**Pressure, MPa (gauge)**	**Pressure, psi (gauge)**
5.00	0.8	116
4.50	0.8	116
3.50	0.6	87
2.50	0.4	58
1.00	0.1	14
0.500	0.0	0
0.250	0.0	0

ED_002078G_00001322-00573

Reductant Pressure Sensor Signal Range Check

Reductant Pressure Sensor Open/Short Check Operation:	
DTCs	P204C - Reductant Pressure Sensor Circuit Low P204D - Reductant Pressure Sensor Circuit High
Monitor execution	Continuous
Monitor Sequence	none
Sensors OK	none
Monitoring Duration	0.4 seconds to register a malfunction

Typical Reductant Pressure Sensor Check Malfunction Thresholds:
Pressure sensor voltage < 0.20 volts or Pressure sensor voltage > 4.8 volts

A reductant Pressure Sensor that is substantially in error results in a DEF system fault (over or under injection). If actual DEF pressure exceeds measured pressure, more DEF than that which would be expected is injected and vice versa. This error would show up in the long term adaption trim (DEF LTA).

Reductant Pressure Plausibility Check before Start-up

If the hydraulic circuit of the DEF system (pump, pressure line, & injector) is completely empty, i.e. purge cycle was successfully completed during previous drive cycle, the DEF pressure is expected to read 0 kPa. Based on sensor tolerances the deviation from zero is limited to 30 kPa.

Reductant Pressure Plausibility Check Operation:	
DTCs	P204B (SRC error for Reductant Pressure Sensor)
Monitor execution	Continuous, prior to pressure build-up
Monitor Sequence	P204B is inhibited by active P204C or P204D codes
Sensors/Actuators OK	none
Monitoring Duration	0.6 seconds to register a malfunction

Typical Reductant Pressure Plausibility Check Entry Conditions:		
Entry Condition	Minimum	Maximum
DEF pump and line not primed		0
DEF system not pressurized		
DEF tank and pump not frozen	True	

Typical Reductant Pressure Plausibility Check Malfunction Thresholds:
P204B: > 30 kPa for 0.6 sec

ED_002078G_00001322-00574

DEF Pressure Build-up Check at Start-up

After the fill cycle is completed, the injector is closed and the system pressure is expected to rise.

Reductant Pressure Functional Check:	
DTCs	P20E8 – Reductant Pressure too Low
Monitor execution	Once during pressure build-up
Monitor Sequence	P20E8 is inhibited by active P204B, P204C or P204D codes
Sensors/Actuators OK	Reductant pressure sensor, Reductant pump motor, injector
Monitoring Duration	1 event (3 times 15 seconds)

Typical Reductant Pressure Plausibility Check Entry Conditions:		
Entry Condition	Minimum	Maximum
DEF pump and line not primed		0
DEF system not pressurized		
DEF tank not frozen	True	

Typical Reductant Pressure Plausibility Check Malfunction Thresholds:
P204B: pressure does not exceed 350 kPa after 45 sec with spinning pump

ED_002078G_00001322-00575

DEF System Pressure Control

DEF pressure is maintained via:

- Feedback knowledge of sensed pressure.

A set point pressure is determined by engine operating conditions (500 kPa over exhaust backpressure). If a pressure increase is desired, the urea pump motor speed is increased by increasing the PWM output. Pressure decreases are analogous; as the system has a backflow throttle, pressure will decrease to 0 unless the pump motor in run continuously.

Reductant Pressure Control (Normal) Functional Check Operation:	
DTCs	P20E8 - Reductant Pressure Too Low P20E9 - Reductant Pressure Too High
Monitor execution	Continuous
Monitor Sequence	P20E8 & P20E9 are inhibited by active P204b, P204C or P204D codes
Sensors/Actuators OK	reductant pump pressure sensor, reductant pump motor, reductant injector
Monitoring Duration	> 10 sec (resp. > 60 sec, see below)

Typical Reductant Pressure Control (Normal) Functional Check Entry Conditions:		
Entry Condition	Minimum	Maximum
DEF system pressure in closed loop control previously	True	

Typical Reductant Pressure Control (Normal) Functional Check Malfunction Thresholds:
P20E8: < 400 kPa for 60 sec respectively < 300 kPa for 10 sec P20E9: > 650 kPa for 10 sec respectively > 790 kPa for 1 sec

ED_002078G_00001322-00576

Reductant Tank Level Sensor

The task of the discrete level sensor is to measure the tank level at 3 different heights. The determination of a reductant level is limited to liquid reductant. Frozen reductant cannot be detected. The measured level will be used to update the calculation of remaining quantity in the reductant tank.

The level sensor consists of four high-grade stainless steel pins. The length of each pin defines the tank level (height) which is to be checked. Only three pins can be used for level evaluation. The fourth pin is used as ground pin. Due to the electrical conductivity of Urea the level sensor will determine whether the tank level is above or below the respective level sensor position. This information will be directly evaluated by the ECU.

Reductant Tank Level Sensor:

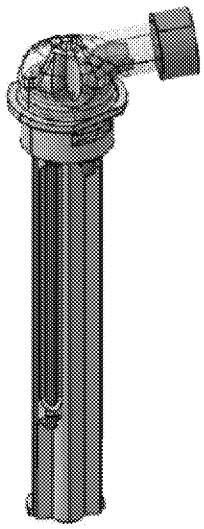

Reductant Tank Level Sensor Circuit Tree:

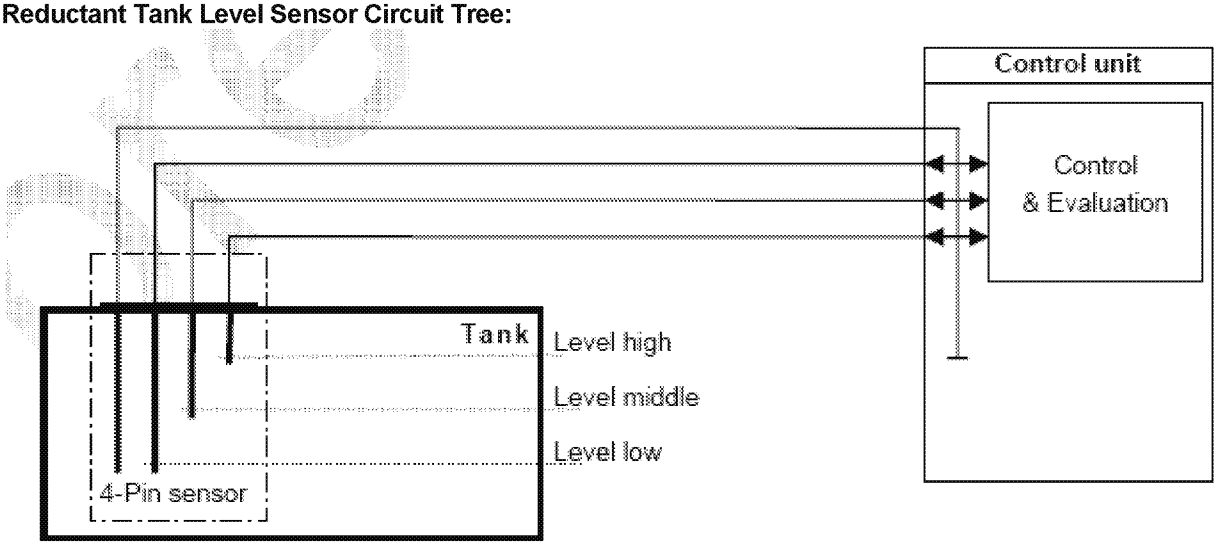

ED_002078G_00001322-00577

Reductant Tank Level Sensor Circuit Checks

Reductant Tank Level Sensor Open/Short Check Operation:	
DTCs	P203D - Reductant Level Sensor "A" Circuit High (SRC max – pin 1 & SCB) P21AB - Reductant Level Sensor "B" Circuit High (SRC max – pin 2) P21B0 - Reductant Level Sensor "C" Circuit High (SRC max – pin 3) P203A - Reductant Level Sensor Circuit (OL) P203C - Reductant Level Sensor Circuit Low (SCG)
Monitor execution	Continuous, every 4 seconds (3x 1 sec to read from each individual pin, 1 sec for diagnosis)
Monitor Sequence	None
Sensors OK	None
Monitoring Duration	0.5 seconds to register a malfunction within diagnostic mode

Typical Tank Level Sensor Open/Short Check Malfunction Thresholds:
P203D, P21AB & P21B0: voltage > 3.24 Volts (Signal range check max. for pin 1, 2 & 3)
P203D: no calibration thresholds available, SCB fault information is sent directly from power stage
P203C: no calibration thresholds available, SCG fault information is sent directly from power stage
P203A: no calibration thresholds available, OL fault information is sent directly from power stage

The Reductant Tank Level Sensor and the Reductant Tank Temperature Sensor share the same ground wire. Therefore an open load or short circuit to battery on the ground wire (reference pin) will set codes for both sensors.

ED_002078G_00001322-00578

Reductant Tank Level Sensor Plausibility Check

If a certain level pin is covered by liquid all pins below this level should be covered as well and send the same information. If this is not the case, an error flag will be set.

Reductant Tank Level Sensor Plausibility Check Operation:	
DTCs	P203B – Reductant Level Sensor Circuit Range/Performance
Monitor execution	Continuous
Monitor Sequence	none
Sensors/Actuators OK	Reductant Level sensor signal range checks
Monitoring Duration	60 seconds to register a malfunction

Typical Reductant Tank Level Sensor Plausibility Check Malfunction Thresholds:
no calibration thresholds available

Reductant Tank Temperature Sensor

The Reductant Tank Temperature sensor is mounted internal to the Reductant Tank Level Sensor. It is used to control the activation of the Reductant Tank Heater as well as an enabler to the Level Sensor (which cannot read level when the reductant is frozen).

Transfer Function

Temperature Deg C	Resistance (Ohms)
-40	336
-30	177
-20	97
-10	55
0	32
10	20
20	12
30	8
40	5.3
50	3.6
60	2.5
70	1.8
80	1.2

ED_002078G_00001322-00579

Reductant Tank Temperature Circuit Range Check	
DTCs	P205C Reductant Tank Temperature Sensor Circuit Low P205D Reductant Tank Temperature Sensor Circuit High
Monitor execution	continuous
Monitor Sequence	none
Sensors OK	not applicable
Monitoring Duration	0.4 seconds to register a malfunction

Typical Intake Reductant Tank Temperature Circuit Range Check Malfunction Thresholds
P205C: voltage < 0.097 Volts P205D: voltage > 3.201 Volts

Plausibility Check

On every cold start of the vehicle (min. soak time > 6 hours) the value of the tank temperature sensor is expected to be close to the environmental temperature.

Reductant Tank Temperature Plausibility Check	
DTCs	P2043 Reductant Temperature Sensor Circuit Range/Performance
Monitor execution	At cold start conditions / extended soak time
Monitor Sequence	P2043 is inhibited by active P205C or P205D codes
Sensors OK	Ambient temp sensor, exhaust gas temp. sensor upstream SCR catalyst, engine coolant temperature sensor (downstream)
Monitoring Duration	counts intermittent events per trip

Typical Reductant Tank Temperature Plausibility Check Entry Conditions:		
Entry Condition	Minimum	Maximum
Engine off timer	6 hours	
Reductant Tank Fluid level	10 %	100 %
Max (ambient temp, SCR catalyst temp., engine coolant temp.) - Min (ambient temp., SCR catalyst temp., engine coolant temp.)		10 deg C

Typical Reductant Tank Temperature Plausibility Check Malfunction Thresholds
Reductant tank temperature – ambient temperature > 20 deg C or < -20 deg C

ED_002078G_00001322-00580

Exhaust Gas Temperature Sensor Rationality Test

Each EGT Sensor is checked continuously for proper circuit continuity and out of range high values. In addition, a rationality test is performed once every drive cycle, after a soak of 6 hours or greater. The rationality test consists of two components, the first being a comparison against modeled values, and the second being a key-on 4-way temperature sensor comparison. At key-on, a temperature sample is taken of each of the following sensors: Exhaust Gas Temperature (EGT11), Exhaust Gas Temperature (EGT12), Exhaust Gas Temperature (EGT13), and Exhaust Gas Temperature (EGT14). Once the engine starts and a cold start has been confirmed, the model comparison tests begin. The model comparison tests ensure that each sensor correlates with an expected modeled value, and a fault is set if the difference is significant (greater than upper threshold or less than lower threshold) and persistent. In the second rationality test, the temperature samples from 4 EGTs at key-on are compared against each other, and the temperature differences are compared against a threshold. One sensor must fail key-on plausibility with three other sensors to set a fault. If two or more sensors fail plausibility with the remaining sensors,, then appropriate faults pointing to the faulty EGTs are set. The first (model versus sensor) rationality tests rely on entry conditions that include engine on time, minimum modeled temperature, minimum engine coolant temperature, and minimum engine torque. Once the entry conditions have been met, the model comparisons continue for several minutes to ensure a robust detection. The modeled value for EGT11 is based on Modeled Turbo Temperatures. The modeled value for EGT12 is based on EGT11. The modeled value for EGT13 is based on EGT12. The modeled value for EGT14 is based on EGT13. In addition, both plausibility tests depend on minimum engine soak time of 6 hours or more.

Exhaust Gas Temperature (EGT) Sensor Circuit Check:	
DTCs	P0545 – Exhaust Gas Temperature Circuit Low (Sensor 1) P0546 – Exhaust Gas Temperature Sensor Circuit High (Sensor 1) P2478 – Exhaust Gas Temperature Out Of Range (Sensor 1) P2032 – Exhaust Gas Temperature Circuit Low (Sensor 2) P2033 – Exhaust Gas Temperature Sensor Circuit High (Sensor 2) P2479 – Exhaust Gas Temperature Out Of Range (Sensor 2) P242C – Exhaust Gas Temperature Circuit Low (Sensor 3) P242D – Exhaust Gas Temperature Sensor Circuit High (Sensor 3) P247A – Exhaust Gas Temperature Out Of Range (Sensor 3) P2470 – Exhaust Gas Temperature Circuit Low (Sensor 4) P2471 – Exhaust Gas Temperature Sensor Circuit High (Sensor 4) P247B – Exhaust Gas Temperature Out Of Range (Sensor 4)
Monitor Execution	Continuous
Monitor Sequence	None
Sensors OK	Not applicable
Typical Monitoring Duration	2 sec.

Typical Exhaust Gas Temperature Sensor Circuit Check Entry Conditions:		
Entry Condition	Minimum	Maximum
Battery Voltage	9 V	16.25 V
Key On		

ED_002078G_00001322-00581

Typical Exhaust Gas Temperature Sensor Circuit Check Malfunction Thresholds:
Voltage < 0.10 volts or voltage > 4.90 volts Out Of Range test is based on Engineering Units and is high-side only. The Out Of Range Threshold is typically set to 1150 deg C. Transfer function of the sensors does not allow for unique circuit range and engineering range thresholds on the low-side.

The Exhaust Gas Temperature Sensor is a PTC Thermistor that provides an analog output voltage proportional to the exhaust gas temperature. This EGT sensor is capable of being used anywhere in the exhaust gas stream. Some possible applications are listed below:

EGT	Exhaust Gas Temp
EGR_CIT	EGR Cooler Inlet Exhaust Gas Temp
EGR_COT	EGR Cooler Outlet Exhaust Gas Temp
DPF_IN	Diesel Particualte Filter Inlet Exhaust Gas Temp
DPF_OUT	Diesel Particulate Filter Outlet Exhaust Gas Temp
SCR_IN	SCR Inlet Exhaust Gas Temp
SCR_OUT	SCR Outlet Exhaust Gas Temp

EGT Sensor Transfer Function

Vout = (Vref * R sensor) / (1K + R sensor)

Response Time: 1 time constant = 15 sec for 300 deg C step @ 10m/sec gas flow

Volts	A/D Counts in PCM	Ohms	Temperature, deg C
0.10		short circuit	n/a
0.71		171	-40
0.82		202	0
1.06		277	100
1.27		350	200
1.45		421	300
1.61		490	400
1.75		556	500
1.88		619	600
1.99		691	700
2.09		740	800
2.14		768	850
2.34			1100
4.90		open circuit	n/a

ED_002078G_00001322-00582

Exhaust Gas Temperature Rationality Check	
DTCs	**Sensor vs. Model Plausibility** P0544 – Exhaust Gas Temperature Sensor Circuit (Sensor 1) P2031 – Exhaust Gas Temperature Sensor Circuit (Sensor 2) P242A – Exhaust Gas Temperature Sensor Circuit (Sensor 3) P246E – Exhaust Gas Temperature Sensor Circuit (Sensor 4) **Sensor to Sensor Plausibility** P2080 - Exhaust Gas Temperature Sensor Circuit Range/Performance (Bank 1, Sensor 1) P2084 - Exhaust Gas Temperature Sensor Circuit Range/Performance (Bank 1, Sensor 2) P242B - Exhaust Gas Temperature Sensor Circuit Range/Performance (Bank 1, Sensor 3) P246F - Exhaust Gas Temperature Sensor Circuit Range/Performance (Bank 1, Sensor 4)
Monitor Execution	Once per driving cycle.
Monitor Sequence	Correlation Test completes after the Model Comparison Tests once the cold start is detected.
Sensors OK	
Typical Monitoring Duration	Model Comparison Test Monitor Duration is 200 to 400 seconds.

Typical Exhaust Gas Temperature Rationality Check Entry Conditions:		
Entry Condition	Minimum	Maximum
Engine Off Time	6 hrs	N/A
Coolant Temp	68 deg C	N/A
Engine Run Time	120 seconds	
Modeled Sensor Temp	120 deg C for EGT11 100 deg C for EGT12 95 deg C for EGT13 90 deg C for EGT14	
Engine Torque	100 Nm	

Typical Exhaust Gas Temperature Rationality Check Thresholds:	
Each EGT Rationality is confirmed against 3 other sensors (absolute temperature difference thresholds):	
Key-On Comparison Threshold	50 deg C
Modeled Comparison Threshold	75 and -180 deg C for EGT11, ±80 deg C for EGT12, ±60 deg C for EGT13, ±60 deg C for EGT14
Modeled Comparison Duration	Comparison Test will run for 200 to 400 seconds. Fault must persist

ED_002078G_00001322-00583

	for 20 seconds for robust detection.

Diesel Particulate Filter Over Temperature Check:	
DTCs	P200C– Diesel Particulate Filter Over Temperature (Bank1) P200E – Catalyst System Over Temperature (Bank 1)
Monitor Execution	Continuous
Monitor Sequence	None
Sensors OK	Not applicable
Typical Monitoring Duration	3 sec.
Thresholds	P200C – Pre DPF > 830C or Post DPF > 950C or Post DPF Temp Sensor Circuit failure P200E - The conditions for P200C have been met for 3 seconds and vehicle speed is less than 1 km/hr

Diesel Particulate Filter Pressure Sensor Rationality Test

For 2013 P473 program, a delta pressure sensor (DPS) is added at the pre DPF location, and it continuously monitors the pressure drop across the DPF for both chassis cert and dyno cert vehicles. Both the DPFP Sensor and DPS are checked continuously for proper circuit continuity, stuck sensor and pressure sensor plausibility. The rationality test compares the measured pressure by the DPFP (gauge pressure) and the inferred pressure from the delta pressure sensor (which is the measured pressure drop across DPF plus the modeled pressure drop after the DPF up to the cold end). The fault is set when this difference is above or below the calibrated thresholds.

Diesel Particulate Filter Pressure (DPFP) Sensor Circuit Check:	
DTCs	P2454 – DPFP Sensor Circuit Low P2455 – DPFP Sensor Circuit High
Monitor Execution	Continuous
Monitor Sequence	None
Sensors OK	Not applicable
Typical Monitoring Duration	2 sec.

Typical Diesel Particulate Filter Pressure Sensor Circuit Check Entry Conditions:		
Entry Condition	Minimum	Maximum
Battery Voltage	9 V	16.25 V
Key On		

Typical Diesel Particulate Filter Pressure Sensor Circuit Check Malfunction Thresholds:
Voltage < 0.10 volts or voltage > 4.90 volts

The DPFP sensor is a single port gauge sensor that provides an analog output voltage that is proportional to pressure and is typically used before and after a DPF (Diesel Particulate Filter) to monitor the differential pressure.

DPFP Sensor Transfer Function		
DPFP volts = 0.082 * kPaG Delta Pressure) + 0.45		
Volts	A/D Counts in PCM	Delta Pressure, kPa Gauge
0.10	20	-4.3
0.45	92	0
1.27	260	10
2.09	428	20
2.91	595	30
3.73	763	40
4.55	931	50
4.90	1003	54.3

Diesel Particulate Filter Pressure Sensor Rationality Check	
DTCs	P246D – Particulate Filter Pressure Sensor "A"/"B" Correlation
Monitor Execution	Continuous.
Monitor Sequence	None.
Sensors OK	
Typical Monitoring Duration	2 seconds.

Typical Diesel Particulate Filter Pressure Sensor Rationality Check Entry Conditions:		
Entry Condition	Minimum	Maximum
Environmental Pressure	745 hPa	
Environmental Temperature	-40 Deg C	
Coolant Temperature	70 Deg C	
Pre DPF Temperature	125 Deg C	425 Deg C
Exhaust Flow	200 kg/hr	600 kg/hr

Typical Diesel Particulate Filter Pressure Sensor Rationality Check Thresholds:
Absolute difference of greater than 1.5 kPa

ED_002078G_00001322-00585

Diesel Particulate Filter Pressure Offset Test

The DPFP Sensor is checked during after-run conditions (period where the key is turned off, however the ECU is still powered), to verify that the sensor has not drifted from the ambient with no exhaust flow. This test is performed by comparing the sensed pressure to a threshold (due the gauge sensor, this value should be 0)

Diesel Particulate Filter Pressure Sensor Offset Check	
DTCs	P2452 – DPFP Sensor Circuit "A"
Monitor Execution	Afterrun
Monitor Sequence	None.
Sensors OK	DPFP Sensor
Typical Monitoring Duration	1 second.

Typical Diesel Particulate Filter Pressure Sensor Offset Check Thresholds:
Exhaust Pressure Sensor value > 1 kPa

The DPS is a dual port delta pressure sensor that provides an analog output voltage that is proportional to pressure drop and is typically used before and after a DPF (Diesel Particulate Filter) to monitor the differential pressure.

Diesel Particulate Filter Delta Pressure (DPS) Sensor Circuit Check:	
DTCs	P2460 – DPS Sensor Circuit Low P2461 – DPS Sensor Circuit High
Monitor Execution	Continuous
Monitor Sequence	None
Sensors OK	Not applicable
Typical Monitoring Duration	2 sec.

Typical Diesel Particulate Filter Delta Pressure Sensor Circuit Check Entry Conditions:		
Entry Condition	Minimum	Maximum
Battery Voltage	9 V	16.25 V
Key On		

Typical Diesel Particulate Filter Delta Pressure Sensor Circuit Check Malfunction Thresholds:
Voltage < .10 volts or voltage > 4.90 volts

ED_002078G_00001322-00586

DPS Sensor Transfer Function		
DPFP volts = 0.082 * kPaG Delta Pressure) + 0.45		
Volts	A/D Counts in PCM	Delta Pressure, kPa Gauge
0.5	20	0.0
1.0	92	4.4
1.6	260	9.6
2.0	428	13.1
2.6	595	18.4
3.0	763	21.9
3.6	931	27.1
4.0	1003	30.6
4.6		35.9
4.8		37.6

ED_002078G_00001322-00587

Diesel Particulate Filter Pressure Offset Test (DPS)

The DPS is checked during after-run conditions (period where the key is turned off, however the ECU is still powered), to verify that the sensor has not drifted from the ambient with no exhaust flow. This test is performed by comparing the sensed pressure to a threshold (due the delta pressure across DPF should be 0)

Diesel Particulate Filter Delta Pressure Sensor Offset Check	
DTCs	P245E – DPS Sensor Circuit "B"
Monitor Execution	Afterrun
Monitor Sequence	None.
Sensors OK	DPS Sensor
Typical Monitoring Duration	1 second.

Typical Diesel Particulate Filter Delta Pressure Sensor Offset Check Thresholds:
Exhaust Pressure Sensor value > 1 kPa

Engine Outputs

EGR Valve Actuator Signal Range Check

The diagnostics for the circuit range check on the pwm signal to the EGR valve are internal to the h-bridge PWM power-stage. Open load, short-circuit to ground, and short-circuit to battery are detected on both the positive and negative control lines to the actuator.

EGR Valve Actuator Open Load (P0403) Check Operation:	
DTCs	P0403 – Exhaust Gas Recirculation "A" Control Circuit
Monitor execution	At start; when Power-stage is OFF.
Monitor Sequence	None
Monitoring Duration	0.35 seconds to register a malfunction

EGR Valve Actuator Short Circuit (P0489/P0490) Check Operation:	
DTCs	P0489 – EGR "A Control Circuit Low, P0490 – EGR "A" Control Circuit High
Monitor execution	Continuous; when Power-stage ON
Monitor Sequence	None
Monitoring Duration	0.35 seconds to register a malfunction

EGR Valve Actuator Jammed Detection

The EGR valve has a component level diagnostic to make sure that the valve is not stuck or sticking in a manner such that it cannot reach the desired position. The monitor runs if a jammed valve is not already detected, position control is in closed-loop control, and adaptive learning is not active. A minimum engine speed is used as an entry condition.

ED_002078G_00001322-00588

If the position governor deviation is above a maximum calibrated threshold then counter starts to count up for the detection of a permanent positive control fault. If the counter reaches a calibrated threshold then a jammed valve malfunction is detected. Similarly, if the position governor deviation is below a minimum calibrated threshold then a second counter starts to count up for the detection of permanent negative control deviation fault. If the counter reaches a calibration threshold then a jammed valve is detected.

EGR Valve Jammed Check Operation:	
DTCs	P042E – Exhaust Gas Recirculation "A" Control Stuck Open
Monitor execution	Continuous
Monitor Sequence	None
Monitoring Duration	5 seconds to register a malfunction

Typical Actuator Jammed Valve Entry Conditions:		
Entry Condition	**Minimum**	**Maximum**
Governor Active (closed-loop position control)		
Adaptive Learning Not Active		
Jammed Valve Fault Not Present on Actuator		
RPM	700 rpm	

Typical EGR Valve Jammed Check (P042E) Malfunction Thresholds:
EGRVlv_rGovDvt > 8.60 or EGRVlv_rGovDvt < -8.60

Throttle Valve Actuator Signal Range Check

The diagnostics for the circuit range check on the pwm signal to the throttle valve are internal to the h-bridge PWM power-stage. Open load, short-circuit to ground, and short-circuit to battery are detected on both the positive and negative control lines to the actuator.

Throttle Valve Actuator Open-Load (P02E0) Check Operation:	
DTCs	P02E0 – Diesel Intake Air Flow Control Circuit / Open
Monitor execution	At start; when Power-stage is OFF.
Monitor Sequence	None
Monitoring Duration	0.2 seconds to register a malfunction

Throttle Valve Actuator Short Circuit (P02E2/P02E3) Check Operation:	
DTCs	P02E2- Diesel Intake Air Flow Control Circuit Low; P02E3- Diesel Intake Air Flow Control Circuit High
Monitor execution	Continuous; when power stage ON
Monitor Sequence	None
Monitoring Duration	0.2 seconds to register a malfunction.

ED_002078G_00001322-00589

Throttle Valve Actuator Jammed Detection

The throttle valve has a component level diagnostic to make sure that the valve is not stuck or sticking in a manner such that it cannot reach the desired position. The monitor runs if a jammed valve is not already detected, position control is in closed-loop control, and adaptive learning is not active.

If the position governor deviation is above a maximum calibrated threshold then counter starts to count up for the detection of a permanent positive control fault. . If the counter reaches a calibrated threshold then a jammed valve malfunction is detected. Similarly, if the position governor deviation is below a minimum calibrated threshold then a second counter starts to count up for the detection of permanent negative control deviation fault. If the counter reaches a calibration threshold then a jammed valve is detected.

A special case exists if the throttle is jammed in the closed position during crank. When the throttle is jammed in the closed position the engine is unable to start. The counter counts up more quickly to allow for the fault to be detected before the crank ends.

Actuator Jammed Valve Check Operation:	
DTCs	P02E1 – Diesel Intake Air Flow Control Performance,
Monitor execution	Continuous
Monitor Sequence	None
Monitoring Duration	5 seconds to register a fault during normal operation. 1 second to register a malfunction during crank.

Typical Actuator Jammed Valve Entry Conditions:
Entry Condition
Governor Active (closed-loop position control)
Adaptive Learning Not Active
Jammed Valve Fault Not Present on Actuator

Typical Throttle Jammed Valve Check (P02E1) Malfunction Thresholds:
Position Governor Deviation > 12.5% or <-12.5 %

ECB Valve Actuator Signal Range Check

ECB Actuator Open-Load Check Operation:	
DTCs	P2425 - Exhaust Gas Recirculation Cooling Valve Control Circuit Open Load
Monitor execution	Continuous;
Monitor Sequence	None
Monitoring Duration	2 seconds to register a malfunction

ECB Actuator Short-Circuit (P2426/P2427) Check Operation:	
DTCs	P2426- Exhaust Gas Recirculation Cooling Valve Control Circuit Low,

ED_002078G_00001322-00590

	P2427- Exhaust Gas Recirculation Cooling Valve Control Circuit High
Monitor execution	Continuous;
Monitor Sequence	None
Monitoring Duration	2 seconds to register a malfunction.

Urea System Pressure Control

Urea pressure is maintained via:

- Feedback knowledge of sensed pressure.

A set point pressure is determined by engine operating conditions (500 kPa over exhaust backpressure). If a pressure increase is desired, the urea pump motor speed is increased by increasing the PWM output. Pressure decreases are analogous; as the system has a backflow throttle, pressure will decrease to 0 unless the pump motor in run continuously.

Urea Pump Pressure Control (Normal) Functional Check Operation:	
DTCs	P20E8 (Reductant Pressure Too Low) P20E9 (Reductant Pressure Too High)
Monitor execution	continuous
Monitor Sequence	P204C and P204D must complete before setting P20E8 or P20E9
Sensors/Actuators OK	Urea pump pressure sensor, Urea pump motor, Urea injector
Monitoring Duration	> 60 sec

Typical Urea Pump Pressure Control (Normal) Functional Check Entry Conditions:		
Entry Condition	Minimum	Maximum
Reductant system pressurized and ready to inject		

Typical Urea Pump Pressure Control (Normal) Functional Check Malfunction Thresholds:
P20E8: < 350 kPa P20E9: > 700 kPa

ED_002078G_00001322-00591

Reductant Pump Motor

The Reductant Pump is driven by a brushless DC electric 12 volt motor. The pump is a positive displacement diaphragm design connected to the motor by a connecting rod and an eccentric on the motor shaft.

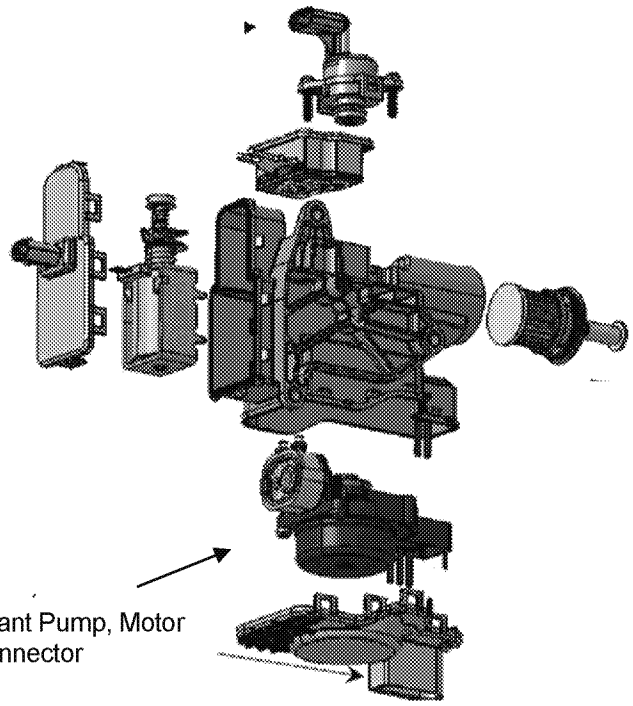

ED_002078G_00001322-00592

Reductant Pump Motor speed is controlled by a PWM driver in the engine ECU. Increasing the duty cycle of the PWM increases the Pump Motor speed. PWM duty cycles between 87 and 95 are reserved for diagnostics.

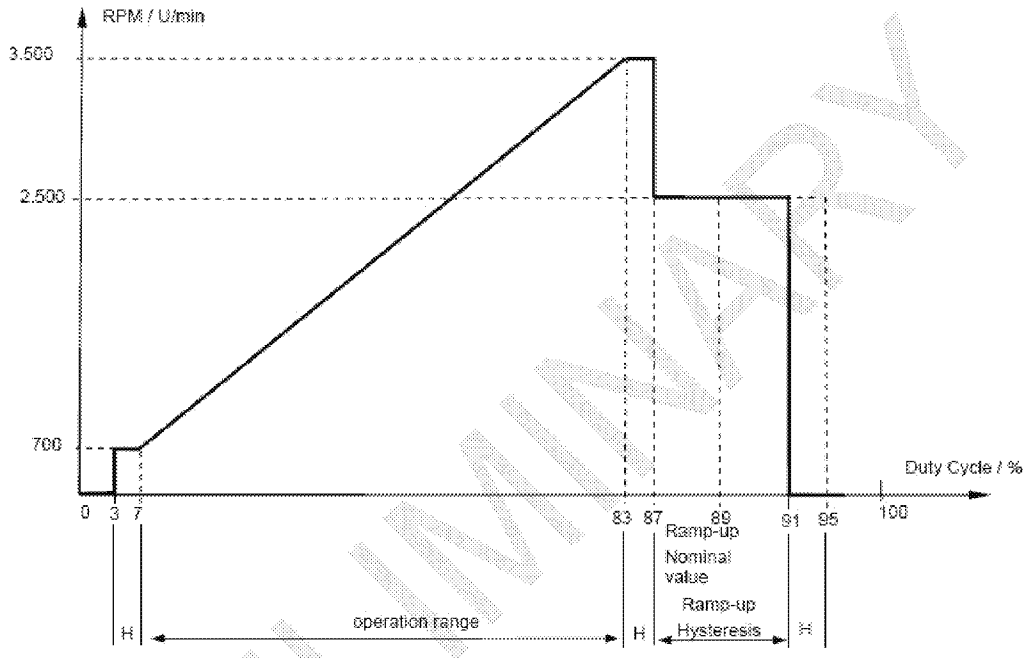

PWM-Duty Cycle – rpm set-point characteristic

H = Hysteresis-range

PRELIMINARY

Reductant Pump Motor Circuit Checks

Reductant Pump Motor Open/Short Check Operation:	
DTCs	P208A – Reductant Pump Control Circuit Open P208C – Reductant Pump Control Circuit Low P208D – Reductant Pump Control Circuit High
Monitor execution	Continuous – Open and Low with driver off / High with driver on
Monitor Sequence	none
Sensors OK	none
Monitoring Duration	Circuit Open / Low: 8 seconds to register a malfunction Circuit High: 2 seconds to register a malfunction

Typical Reductant Motor Check Malfunction Thresholds:
No calibration thresholds available, fault information is sent directly from power stage.
P208A - Reductant Pump Control Open Circuit > 5.80 volts
P208C - Reductant Pump Control Circuit Low < 3.50 volts
P208D - Reductant Pump Control Circuit High > 2.2 amps

ED_002078G_00001322-00594

Reductant Pump Motor Functional Check

The functional check monitors the Pump Motor Speed Deviation. This test is run if the commanded pump speed is within normal operating range, i.e. duty cycle 6.5 to 80 %. In this test if the internal RPM measurement of the Reductant Pump Motor speed is not matching the commanded speed within a certain percentage, a fault is detected and the system is shut down for this key cycle.

Reductant Pump Motor Control (Normal) Functional Check Operation:	
DTCs	P208B – Reductant Pump Control Range/Performance
Monitor execution	continuous
Monitor Sequence	P208A , P208C, P208D must complete
Sensors/Actuators OK	Reductant pump pressure sensor, Reductant injector
Monitoring Duration	5 sec for fault detection

Typical Reductant Pump Motor Control (Normal) Functional Check Malfunction Thresholds:
P208B: > 300 RPM error

Reductant Dosing Valve (Injector)

The reductant dosing valve is used to meter and atomize the reductant liquid before it is mixed with the exhaust gas. Normal operating frequency is between 3 Hz and .3 Hz. The cooling body contains heat sink fins to keep the injector and reductant below the boiling point. If the sensed temperature is nearing the maximum temperature threshold, reductant spray will be increased in quantity to actively cool the valve.

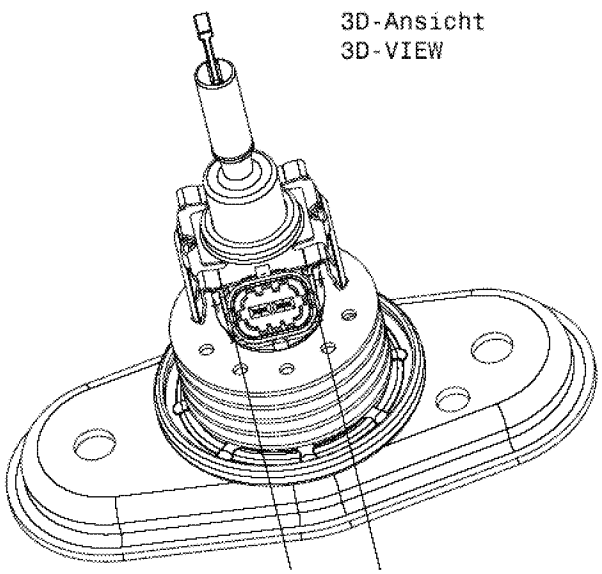

ED_002078G_00001322-00595

Reductant Dosing Valve Circuit Checks

Reductant Dosing Valve Circuit Check Operation:	
DTCs	P2047 – Reductant Injection Valve Circuit / Open (Bank 1 Unit 1) P2048 – Reductant Injection Valve Circuit Low (Bank 1 Unit 1) P2049 – Reductant Injection Valve Circuit High (Bank 1 Unit 1)
Monitor execution	Continuous
Monitor Sequence	none
Sensors OK	none
Monitoring Duration	2 seconds to register a malfunction

Typical Reductant Dosing Valve Circuit Check Malfunction Thresholds:
No calibration thresholds available, fault information is sent directly from power stage
P2047 – Reductant Injection Valve Circuit / Open (Bank 1 Unit 1) - >5.80 volts
P2048 – Reductant Injection Valve Circuit Low (Bank 1 Unit 1) - < 3.2 volts HS, < 3.5 volts LS
P2049 – Reductant Injection Valve Circuit High (Bank 1 Unit 1) - > .4 volts HS, >2.2 amps LS

Plausibility Check for Pump Motor Duty Cycle (Leakage / Clogging)

The Pump Motor Duty Cycle is monitored depending on Urea dosing request.

Plausibility Check for Reductant Flow:	
DTCs	P202D - Reductant Leakage P218F - Reductant System Performance
Monitor execution	continuous
Monitor Sequence	P208A , P208C, P208D must complete
Sensors/Actuators OK	Urea pump pressure sensor, Urea injector
Monitoring Duration	2 sec for fault detection – 3 events per drive cycle

ED_002078G_00001322-00596

Typical Plausibility Check for Pump Motor Duty Cycle Entry Conditions:		
Entry Condition	Minimum	Maximum
CoSCR_stSub	Metering control	Metering control

Typical Plausibility Check for Pump Motor Duty Cycle Malfunction Thresholds:
P202D (Reductant Leakage): - no dosing: pump duty cycle > 50 % - dosing: pump duty cycle increase > 50 % P218F (Reductant no flow): - no dosing: pump duty cycle < 6.75 % - dosing: pump duty cycle increase < 5 % (dosing rate > 200 mg/sec)

ED_002078G_00001322-00597

Reductant Dosing Valve Functional Check

The functional check monitors the movement of the injector needle. When the injector needle reaches its upper position (injector open, begin of injection period) a discontinuity in the slope of the dosing valve current occurs.

This functional check monitors the presence of this discontinuity. If it does not occur the injector is either stuck open or stuck closed. In both case the system cannot be operated and will be shut down.

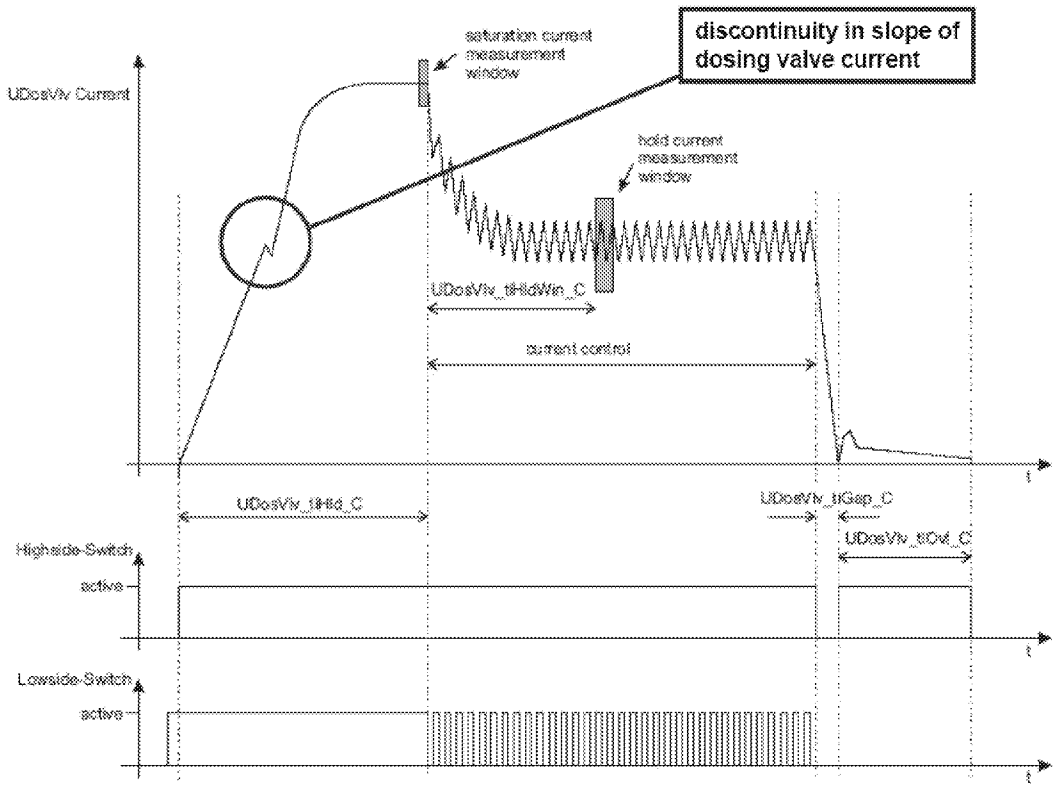

Reductant Injection Functional Check Operation:	
DTCs	P208E - Reductant Injection Valve Stuck Closed (Bank 1 Unit 1)
Monitor execution	Once per injection stroke
Monitor Sequence	P208E is inhibited by active P2047, P2048 or P2049
Sensors/Actuators OK	Reductant pump motor, Reductant pressure sensor
Monitoring Duration	50 injection strokes for fault detection

Typical Reductant Injection Functional Check Malfunction Thresholds:
No calibration thresholds available, fault information is sent directly from power stage

ED_002078G_00001322-00598

Reverting Valve

In order to reverse the Reductant flow direction (for line purge) a 4-2-way valve (reverting valve) needs to be switched. The valve is switched by a solenoid.

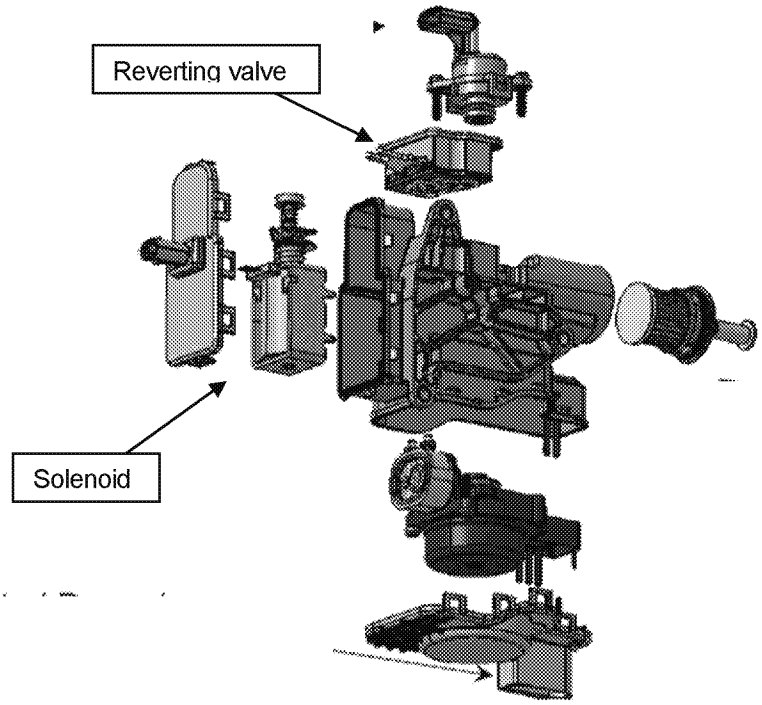

ED_002078G_00001322-00599

Reverting Valve Circuit Checks

Reverting Valve Circuit Check Operation:	
DTCs	P20A0 – Reductant Purge Control Valve Circuit / Open P20A3 – Reductant Purge Control Valve Circuit High P20A2 – Reductant Purge Control Valve Circuit Low
Monitor execution	Continuous – Open and Low with driver off / High with driver on
Monitor Sequence	none
Sensors OK	none
Monitoring Duration	2 seconds to register a malfunction

Typical Reverting Valve Circuit Check Malfunction Thresholds:
No calibration thresholds available, fault information is sent directly from power stage

Reverting Valve Functional Check

The functional check monitors the pressure for no increase when the purge cycle is started. To run this test the vehicle ignition is turned off, then a calibrated delay time (7 sec) is used. Once the delay expires, the pump and reverting valve are accuated. For a successful test result, the pressure must not increase by another threshold (50.0 kPa) within the given purge time – Typically purge is 5 seconds.

If the test is not successfully passed the purge cycle will be terminated immediately because of the risk of uncontrolled injection of reductant into the exhaust pipe.

Reverting Valve Functional Check Operation:	
DTCs	P20A1 - Reductant Purge Control Valve Performance
Monitor execution	continuous
Monitor Sequence	P20A1 is inhibited by active P20A0 , P20A3 or P20A2
Sensors/Actuators OK	reductant pump pressure sensor, reductant injector, reductant pump motor
Monitoring Duration	7 secs after key off with no monitoring. Then 5 seconds of monitoring with pump on reverting valve actuated (purge)

Typical Reverting Valve Functional Check Malfunction Thresholds:
P20A1 Max. pressure increase >50.0 kPa error during purge (reverse flow expected) - 1 event > 50.0 kPa during the monitoring window.

ED_002078G_00001322-00600

Urea Heaters

Aqueous urea water solution (Diesel Exhaust Fluid) freezes at -11°C (12 deg. F). In order to keep the fluid liquid at low ambient temperatures, the system includes 3 heaters:

- tank heater (PTC heater element – self regulating)
- pump heater (PTC heater element – self regulating)
- pressure line heater (Resistance heater)

The heater power stages are located in the glow plug control module (GPCM). The tank heater is connected to heater power stage #1. The pressure line & pump heater are connected in parallel to heater power stage #2.

All SCR-heater related circuit checks are performed inside the GCU. The information is sent via CAN to the engine control module (ECM).

Additionally the GCU sends the supply voltage and the actual heater current for each circuit to the ECM.

Based on this information the heater plausibility checks are performed on the ECM.

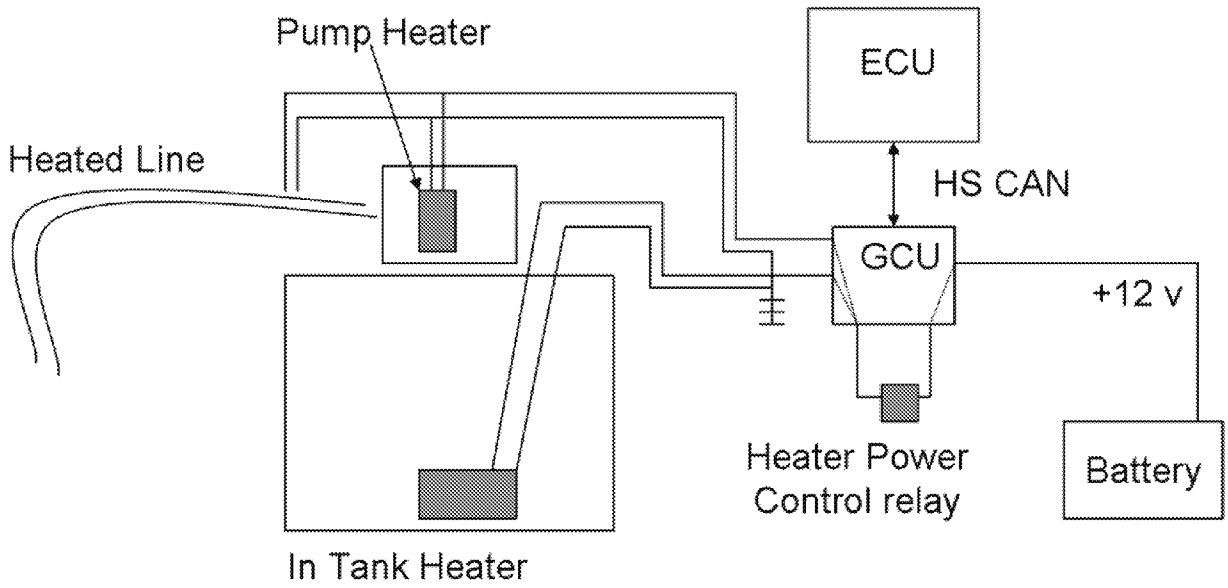

ED_002078G_00001322-00601

Reductant Heater Plausibility Checks

Based on the information of heater voltage and heater current, the actual conductance at peak power is calculated for each heater circuit. This value is checked against the nominal value including tolerances.

Typical characteristic of PTC heater conductance:

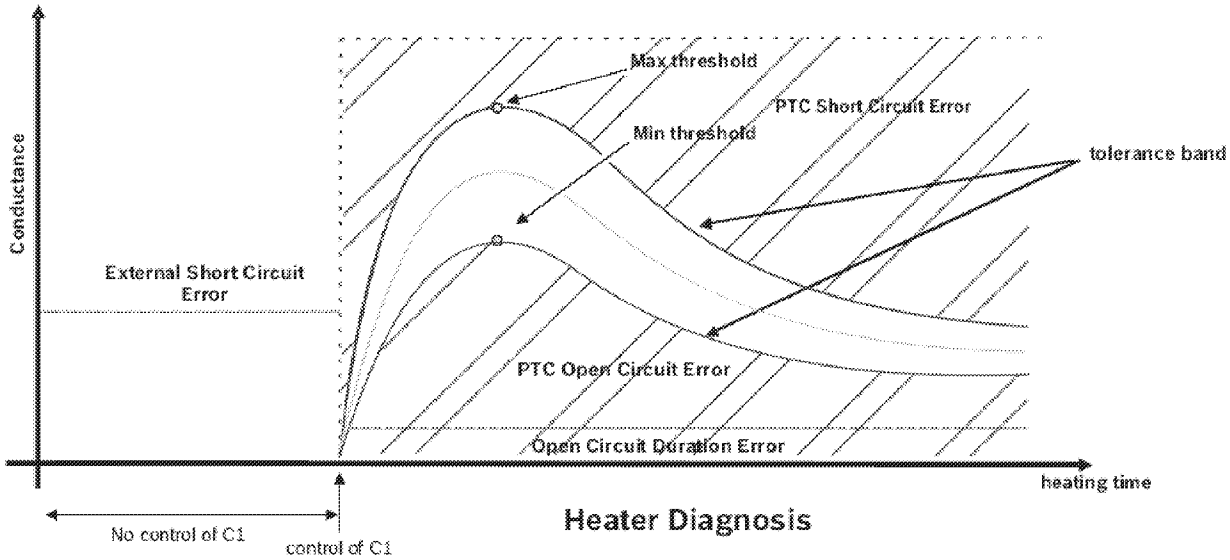

Reductant Heater Plausibility Check Operation:	
DTCs	P20BA – Reductant Heater "A" Control Performance P20BE – Reductant Heater "B" Control Performance P263D – Reductant Heater Driver Performance
Monitor execution	Once per drive cycle (at peak heater power)
Monitor Sequence	P20B9, P20BB, P20BC must complete for P20BA P20BD, P20BF, P20C0 must complete for P20BE
Sensors/Actuators OK	none
Monitoring Duration	1 event for fault detection

Typical Reductant Heater Plausibility Check Malfunction Thresholds:
P20BA: > nominal conductance of heater circuit #1 + max. tolerance or < nominal conductance of heater circuit #1 – max. tolerance
P20BE: > nominal conductance of heater circuit #2 + max. tolerance or < nominal conductance of heater circuit #2 – max. tolerance
P263D: Driver circuit temperatures > 125C

ED_002078G_00001322-00602

Additional plausibility check for heater circuit #2:

Pump heater & pressure line heater are connected in parallel to heater power stage #2. In order to be able to detect a failure of just one of both heaters, the conductance of heater circuit #2 is continuously checked against a minimum threshold. E.g. if the pressure line heater gets disconnected after peak conductance occurred, neither the plausibility check nor the circuit checks inside the GCU can detect this error. Therefore this continuous check becomes necessary.

Reductant Heater Plausibility Check Operation (Heater Circuit #2):	
DTCs	P20BE – Reductant Heater "B" Control Performance
Monitor execution	Continuously, if heater “B” is activated
Monitor Sequence	P20BD, P20BF, P20C0 must complete for P20BE
Sensors/Actuators OK	Pressure line heater
Monitoring Duration	2200 ms for fault detection

Typical Reductant Heater Plausibility Check Malfunction Thresholds (Heater Circuit #2):
P20BE: conductance of heater circuit #2 < 0.3 Ω^{-1}

Reductant tank heater performance check (heater circuit #1):

The tank heater is located in close proximity to the tank temperature sensor. Therefore the tank temperature sensor can be used to monitor the tank heater performance.

When the tank heater is activated, the tank temperature is expected to rise. If this is not the case a fault will be set. If the vehicle is operated for several consecutive short drive cycles, the test may require more than one drive cycle to complete.

Reductant Heater Performance Check Operation (Heater Circuit #1):	
DTCs	P209F – Reductant Tank Heater Control Performance
Monitor execution	Once per heat cycle (after cold start)
Monitor Sequence	P20B9, P20BB, P20BC must complete for P209F
Sensors/Actuators OK	tank temperature sensor, tank heater
Monitoring Duration	2200 ms for fault detection

Typical Reductant Heater Performance Check Malfunction Thresholds (Heater Circuit #1):
P209F: temperature increase < 0.5°C

ED_002078G_00001322-00603

Engine Control Unit (ECU) Monitor Operation:	
DTCs	P0600 - Serial Communication Link P0601 - Internal Control Module Memory Checksum Error P0603 – Internal Control Module Keep Alive Memory (KAM) Error P0606 - Control Module Processor P060A - Internal Control Module Monitoring Processor Performance P060B - Internal Control Module A/D Processing Performance P060D - Internal Control Module Accelerator Pedal Position Performance P0611 – Fuel Injector Control Module Performance P061A - Internal Control Module Torque Performance P061B - Internal Control Module Torque Calculation Performance P061C - Internal Control Module Engine RPM Performance P062B - Internal Control Module Fuel Injector Control Performance P062F - Internal Control Module EEPROM Error P06A6 - Sensor Reference Voltage "A" Circuit Range/Performance P06A7 - Sensor Reference Voltage "B" Circuit Range/Performance P06A8 - Sensor Reference Voltage "C" Circuit Range/Performance P167F - Non-OEM Calibration Detected P2507 - ECM / PCM Power Input Signal Low P2508 - ECM / PCM Power Input Signal High P2610 – ECM / PCM Engine Off Timer Performance

Monitor Execution	P0600, P0603, P0606, P060A, P060B, P060D, P0611, P061A, P061B, P061C, P062B, P062F, P06A6, P06A7, P06A8, P167F, P2507, P2508, P2610, – Continuous P0601 – Postdrive
Monitor Sequence	None
Sensors OK	None
Typical Monitoring Duration	P0600, P0601, P0603, P0606, P060A, P060B, P060D, P061B, P061C, P062B, P062F, P06A6, P06A7, P06A8, P167F, P2507, P2508, P0611 – 5 sec P061A – 0.1 sec , P2610 – 8 sec

ED_002078G_00001322-00604

Typical Engine Control Unit (ECU) Monitor Entry Conditions:		
Entry condition	Minimum	Maximum
P0600, P0603, P0606, P060A, P060B, P060D, P061A, P061B, P061C, P062B, P062F, P06A6, P06A7, P06A8, P167F, P2507, P2508, P2610: ECU energized (key-on, engine running, or post-drive before ECU shutdown)		
P0601: Post-drive		
P0611: Engine running or cranking		

ED_002078G_00001322-00605

Typical Engine Control Unit (ECU) Monitor Malfunction Thresholds:
P0600 – – A data transfer between chips in the ECU either is not possible or has invalid check bytes OR Communication is interrupted between the CPU and the monitoring module P0601 – An error is detected in the post-drive ROM test P0603 – Voltage on the separate power supply for the ECU engine off timer chip (power supply used when the main ECU is shut down) is < 0.25V (normal operation: battery voltage ~12V) P0606 – A communications error exists between the powerstage controller chip and the CPU OR an internal chip error has been detected within the voltage generation/monitoring system for the ECU OR voltage at 5V supply in ECU is <4.7V or > 5.3V P060A – An irreversible error occurs with an operating system function call OR An irreversible error occurs in the test of the monitoring module P060B – Failure on power-up calibration done for the A/D conversion module and A/D conversion time performed on ECU start OR >249 mV reading in the cycle following grounding of a specific voltage OR Cyclical conversion of a predetermined voltage results in <4727 mV or >4830 mV reading. P060D – If either pedal voltage 1 or pedal voltage 2 < 742 mV and (pedal voltage 1) – 2 * (pedal voltage 2) > 547 mV OR If pedal voltage 1 and pedal voltage 2 >= 742 mV and (pedal voltage 1) – 2 * (pedal voltage 2) > 1055 mV P0611 – If the raw voltage detected by an internal ECU voltage measurement for fuel system Nominal Voltage Calibration falls below 0 mV or above 3300 mV for the monitoring duration P061A – Commanded inner torque > permissible inner torque at current engine operating condition P061B – The energizing time for Zero Fuel Calibration is <10 ms or > 850 ms (beyond limits for P02CC-P02DA) OR The difference between programmed energizing time and actual energizing time exceeds 127.2 us or The requested time for start of energizing of a given fuel injection is outside the crank angle regime permitted for that injection OR The correction in requested fuel injection quantity due to transient pressure effects within the fuel injector as calculated by the control software and as calculated by the monitor exceeds 5 mg for an injection P061C – The engine speed calculated by the control software and the engine speed calculated by the monitor deviate by more than 400 RPM P062B – If an error is detected in a requested post injection OR If requested energizing time exceeds 200 us when the controller is operating in overrun/decel fuel shut-off mode P062F – An error is detected in an EEPROM read, write, or erase operation P06A6 – Voltage output of sensor supply 1 is <4.7 V or >5.3 V P06A7 – Voltage output of sensor supply 2 is <4.7 V or >5.3 V P06A8 – Voltage output of sensor supply 3 <4.7 V or >5.3 V P167F – a non-OEM calibration has been detected P2507 – The 5V internal ECU supply is <4.2 V P2508 – The 5V internal ECU supply is > 5.5 V P2610 – If, during a key off event, engine coolant temperature decreases by 30 degrees and the engine off timer has not incremented at least 1200 seconds OR If, while running for 1200 seconds as measured by ECU timer, the timer used for engine off time and the time as determined by the secondary timer differ by at least 100 seconds OR In afterrun, if a requested 8 second stop timer measurement is <7.52 seconds or >8.48 seconds

ED_002078G_00001322-00606

Idle Speed and Fuel Monitor Operation:	
DTCs	P0506 - Idle Control System - RPM Lower Than Expected P0507 - Idle Control System - RPM Higher Than Expected P054E - Idle Control System - Fuel Quantity Lower Than Expected P054F - Idle Control System - Fuel Quantity Higher Than Expected
Monitor Execution	P0506, P0507, P054E, P054F - Continuous
Monitor Sequence	None
Sensors OK	P0506 - Engine Coolant Temperature (P0116, P0117, P0118, P0128, Crankshaft Sensor (P0335, P0336), P0507 - Engine Coolant Temperature (P0116, P0117, P0118, P0128, Crankshaft Sensor (P0335, P0336), P054E - Engine Coolant Temperature (P0116, P0117, P0118, P0128, Crankshaft Sensor (P0335, P0336), P054F - Engine Coolant Temperature (P0116, P0117, P0118, P0128, , Crankshaft Sensor (P0335, P0336),
Typical Monitoring Duration	P0506 – 5 sec P0507 – 5 sec P054E – 5 sec P054F – 5 sec

Typical Idle Speed and Fuel Monitor Entry Conditions:		
Entry condition	Minimum	Maximum
P0506, P0507:		
Engine idle speed governor active		
Engine Coolant Temperature (°C)	0	120
Vehicle Speed (kph)		1
Engine RPM	300 (stall speed)	1500 (300 rpm above max requestable idle speed)
P054E, P054F:		
Engine running		

Typical Idle Speed and Fuel Monitor Malfunction Thresholds:
P0506 – If observed idle speed is 100 or more RPM below requested idle speed
P0507 – If observed idle speed is 160 or more RPM above requested idle speed
P054E – If calculated torque required for idle is 30+% below the minimum threshold of 10 Nm
P054F – If calculated torque required for idle is 30+% above the maximum of threshold of 120 Nm

ED_002078G_00001322-00607

Lack of Communication Codes:

CAN Communications Error

The TCM receives information from the ECM via the high speed CAN network. If the CAN link or network fails, the TCM no longer has torque or engine speed information available. The TCM will store a U0073 fault code and will illuminate the MIL immediately (missing engine speed) if the CAN Bus is off. The TCM will store a U0100 fault code and will illuminate the MIL immediately (missing engine speed) if it stops receiving CAN messages from the ECM.

ECU CAN Communication Malfunctions	
DTCs	U0073 - Control Module Communication Bus "A" Off U0074 - Control Module Communication Bus "B" Off U0101 - Lost Communication with TCM U0102 - Lost Communication with Transfer Case Control Module U0121 - Lost Communication With Anti-Lock Brake System (ABS) Control Module U0151 - Lost Communication With Restraints Control Module U0212 - Lost Communication With Steering Column Control Module U029D - Lost Communication With NOx Sensor "A" U029E - Lost Communication With NOx Sensor "B" U0307 - Software Incompatibility with Glow Plug Control Module U0407 - Invalid Data Received from Glow Control Module U059E - Invalid Data Received from NOx Sensor "A" U059F - Invalid Data Received from NOx Sensor "B"
Monitor execution	continuous
Monitor Sequence	None
Sensors OK	not applicable
Monitoring Duration	continuous

Typical Malfunction Thresholds
U0073 CAN Chip Driver detect CAN line short or open > 10 ms
U0074 CAN Chip Driver detect CAN line short or open > 10 ms
U0101 TCM master message not received for 1 sec
U0102 TCCM master message not received for 5 sec
U0121 ABS master message not received for 5 sec
U0151 RCM master message not received for 10 sec
U0212 SCCM master message not received for 5 sec
U029D Nox sensor master message not received for .75 sec
U029E Nox sensor master message not received for .75 sec
U0307 – Glow module reporting "safe glow" mode

ED_002078G_00001322-00608

U0407 - Calibration Verification Number not received by ECU U059E - Calibration Verification Number not received by ECU

Vehicle speed is received by the ECU over CAN from the ABS system or (if the ABS system is faulted on all 4 wheel speed sensors) the TCU through Output Shaft Speed calculation to wheel speed

VS Communication Plausibility Malfunctions	
DTCs	P0500 Vehicle Speed Sensor "A"
Monitor execution	continuous
Monitor Sequence	None
Sensors OK	not applicable
Monitoring Duration	continuous

Typical Malfunction Thresholds
VS signal is missing from the CAN system for 0.5 Seconds.

ED_002078G_00001322-00609

Glow Plugs

The diesel engine uses glow plugs to assist with cold weather starting and combustion until the cylinder is warm enough to operate normally. The glow plugs are duty cycle controlled and will overheat if constant 12V is applied.

The glow plugs are operated by the Glow Plug Control Module (GPCM). It contains 8 high current smart MOSFET drivers, one for each glow plug. Glow time and intensity are calculated on the basis of CAN signals (rpm, torque, engine coolant temp, air temp and BP.) The module also contains 3 drivers for the DEF (NOx reductant) heating and thawing system.

GPCM

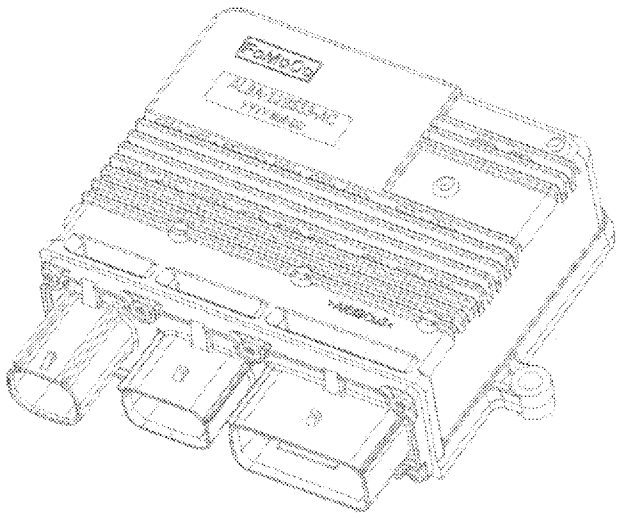

The GPCM is connected to the ECU via Diesel high speed CAN. All data and diagnostics pass over this non-public communication bus. The standard operating voltages for the GPCM are 6.5 volts to 16 volts. Limited operation between 5.5v and 6.5v on the lower range and no operation below 5.5v. Glow function is disabled below 6.5v and above 16.5v.

ED_002078G_00001322-00610

Glow Plug Module Operational Checks:	
DTCs	U0106 – Lost Communication with GPCM P0381 – Glow Plug/Heater Indicator Circuit P064C – Glow Plug Control Module P06DF – Glow Plug Module Memory Checksum Error P138B – Glow Plug Module System Voltage P20C2 – Reductant Heater "C" Control Performance P26C3 - Glow Plug Driver Performance P06E5 - Glow Plug Control Module 1 Performance P263E - Glow Plug Control Module 1 Over Temperature
Monitor execution	P06DF, P0381 at power up, otherwise continuous
Monitor Sequence	none
Sensors OK	none
Monitoring Duration	~1 second to register a malfunction

Glow Plug Module: Malfunction Thresholds:
Communication lost for > 5 seconds
Cluster detects wait to start lamp in wrong state (off when commanded on)
Any internal driver circuits detect fault (not switching or over temp) > 1 sec (glow plugs, urea heaters or relay)
RAM checksums do not match expected
GPCM main power feed voltage too low / too high / open circuit (< 6.5 volts or > 16 volts)
Low voltage detected on the Reductant Heater Circuit "C" < 5 volts

ED_002078G_00001322-00611

Glow Plug Circuit Open Load Check Operation:	
DTCs	P0671 – Cylinder 1 Glow Plug Circuit / Open P0672 – Cylinder 2 Glow Plug Circuit / Open P0673 – Cylinder 3 Glow Plug Circuit / Open P0674 – Cylinder 4 Glow Plug Circuit / Open P0675 – Cylinder 5 Glow Plug Circuit / Open P0676 – Cylinder 6 Glow Plug Circuit / Open P0677 – Cylinder 7 Glow Plug Circuit / Open P0678 – Cylinder 8 Glow Plug Circuit / Open P20B9 – Reductant Heater "A" Control Circuit / Open P20BD – Reductant Heater "B" Control Circuit / Open P20C1 – Reductant Heater "C" Control Circuit / Open
Monitor execution	Glow plugs in heating mode. Heaters operational
Monitor Sequence	none
Sensors OK	none
Monitoring Duration	~1 second to register a malfunction

Glow Plug Circuit Open Load: Malfunction Thresholds:
Individual glow plug circuit current < 1 A, Individual reductant heater circuit current < .2 A

Glow Plug Circuit Short to Battery Check Operation:	
DTCs	P066B – Cylinder 1 Glow Plug Circuit High P066D – Cylinder 2 Glow Plug Circuit High P066F – Cylinder 3 Glow Plug Circuit High P067B – Cylinder 4 Glow Plug Circuit High P067D – Cylinder 5 Glow Plug Circuit High P067F – Cylinder 6 Glow Plug Circuit High P068D – Cylinder 7 Glow Plug Circuit High P068F – Cylinder 8 Glow Plug Circuit High P20BC – Reductant Heater "A" Control Circuit High P20C0 – Reductant Heater "B" Control Circuit High P20C4 – Reductant Heater "C" Control Circuit High
Monitor execution	Glow plugs in heating mode. Heaters operational
Monitor Sequence	none
Sensors OK	none
Monitoring Duration	~1 second to register a malfunction for glow plugs 250 ms to register a malfunction for the reductant heaters

ED_002078G_00001322-00612

Glow Plug Circuit Short to Battery: Malfunction Thresholds:
Individual glow plug circuit = 0 Amps current, Individual reductant heater circuit = 0 Amps current

Glow Plug Circuit Short to Ground Check Operation:	
DTCs	P066A – Cylinder 1 Glow Plug Circuit Low P066C – Cylinder 2 Glow Plug Circuit Low P066E – Cylinder 3 Glow Plug Circuit Low P067A – Cylinder 4 Glow Plug Circuit Low P067C – Cylinder 5 Glow Plug Circuit Low P067E – Cylinder 6 Glow Plug Circuit Low P068C – Cylinder 7 Glow Plug Circuit Low P068E – Cylinder 8 Glow Plug Circuit Low P20BB – Reductant Heater "A" Control Circuit Low P20BF – Reductant Heater "B" Control Circuit Low P20C3 – Reductant Heater "C" Control Circuit Low
Monitor execution	Glow plugs in heating mode. Heaters operational.
Monitor Sequence	none
Sensors OK	none
Monitoring Duration	~3 second to register a malfunction for glow plugs 250 ms to register a malfunction for the reductant heaters

Glow Plug Circuit Short to Battery: Malfunction Thresholds:
Individual glow plug circuit > 20 Amps current > 1 second
Individual glow plug circuit > 70 Amps current for > .2 ms
Reductant heater relay (circuit "A" & "B") > 15 Amps current > 250 ms
Reductant heater relay (circuit "C") > 6 Amps current > 250 ms

ED_002078G_00001322-00613

Glow Plug Circuit Resistance Out of Range Check:	
DTCs	P06B9 – Cylinder 1 Glow Plug Circuit Range / Performance P06BA – Cylinder 2 Glow Plug Circuit Range / Performance P06BB – Cylinder 3 Glow Plug Circuit Range / Performance P06BC – Cylinder 4 Glow Plug Circuit Range / Performance P06BD – Cylinder 5 Glow Plug Circuit Range / Performance P06BE – Cylinder 6 Glow Plug Circuit Range / Performance P06BF – Cylinder 7 Glow Plug Circuit Range / Performance P06C0 – Cylinder 8 Glow Plug Circuit Range / Performance
Monitor execution	Glow plugs in heating mode.
Monitor Sequence	After Open circuit, short to battery and short to ground testing
Sensors OK	none
Monitoring Duration	~3 second to register a malfunction

Glow Plug Circuit Short to Battery: Malfunction Thresholds:
Individual circuit > 2 ohms resistance

ED_002078G_00001322-00614

Turbocharger Actuator Signal Range Check

The diagnostics for the circuit range check on the pwm signal to the turbocharger VGT actuator are internal to the PWM power-stage. Open load, short-circuit to ground, and short-circuit to battery are detected on the single control line to the actuator.

Turbocharger Control Circuit Open Load/Short to Ground/Short to Power:	
DTCs	P132A - Turbocharger/Supercharger Boost Control "A" Electrical
Monitor execution	Continuous
Monitor Sequence	None
Monitoring Duration	2 seconds to register a malfunction

Wastegate Vacuum Solenoid Signal Range Check

The 6.7L chassis cert engine is equipped with a vacuum actuated wastegate. Vacuum is supplied at all times to the wastegate vacuum regulating valve, which is controlled via PWM signal. When a PWM signal is applied to the vacuum regulating valve, the valve opens and vacuum is applied to the wastegate, and the wastegate opens. There is an intrusive monitor to verify wastegate movement, and in addition there are open load/short circuit to ground/battery diagnostics on the vacuum regulating valve.

The diagnostics for the circuit range check on the pwm signal to the wastegate vacuum control solenoid are internal to the PWM power-stage. Open load, short-circuit to ground, and short-circuit to battery are detected on the single control line to the solenoid.

Wastegate Open Load Operation:	
DTCs	P0243 - Turbocharger/Supercharger Wastegate Solenoid "A"
Monitor execution	Continuous
Monitor Sequence	None
Monitoring Duration	2 seconds to register a malfunction

Wastegate Short Circuit Check Operation:	
DTCs	P0245 – Turbocharger/Supercharger Wastegate Solenoid "A" Low P0246 – Turbocharger/Supercharger Wastegate Solenoid "A" High
Monitor execution	Continuous
Monitor Sequence	None
Monitoring Duration	2 seconds to register a malfunction.

ED_002078G_00001322-00615

Miscellaneous ECU Errors:

Vehicle Configuration Information Errors

Vehicle specific information is stored in two locations: the VID block within the ECU and within the body control module (BCM). The following fault codes are immediate malfunction lamp codes (1 drive cycle) and reflect that the vehicle configuration information has been improperly configured.

VID Block Configuration	
DTCs	P0602 - Internal Control Module Keep Alive Memory (KAM) Error P0610 - Control Module Vehicle Options Error P0630 - VIN Not Programmed or Incompatible - ECM/PCM P1639 - Vehicle ID Block Corrupted, Not Programmed P264F - Engine Serial Number Not Programmed or Incompatible

ECU Main Relay	
DTCs	P0685 - ECM/PCM Power Relay Control Circuit/Open P068A – ECM/PCM Power Relay De-Energized Too Early
Monitor execution	Continuous
Monitor Sequence	None
Monitoring Duration	0.5 seconds to register a malfunction.

Comprehensive Component Monitor - Transmission

General

The MIL is illuminated for all emissions related electrical component malfunctions. For malfunctions attributable to a mechanical component (such as a clutch, gear, band, valve, etc.), some transmissions are capable of not commanding the mechanically failed component and providing the remaining maximum functionality (functionality is reassessed on each power up)- in such case a non-MIL Diagnostic Trouble Code (DTC) will be stored and, if so equipped, the Wrench" Light will flash.

Transmission Inputs

Transmission Range Sensor Check Operation:	
DTCs	P0706 - Out of range signal frequency for PWM TRS P0707, P0708 - Low /High duty cycle for PWM TRS
Monitor execution	Continuous
Monitor Sequence	None

ED_002078G_00001322-00616

Sensors OK	
Monitoring Duration	5 seconds of signal out of range

Typical TRS check entry conditions:		
Auto Transmission Entry Conditions	Minimum	Maximum
battery voltage	7v	18v

Typical TRS malfunction thresholds:
PWM TRS: Frequency > 175 Hz or < 75 Hz, Duty Cycle > 90% or < 10%

Output Shaft Speed Sensor Functional Check Operation:	
DTCs	P0720 – OSS circuit P0722 – OSS no signal
Monitor execution	Continuous
Monitor Sequence	None
Sensors OK	TSS, Wheel Speed
Monitoring Duration	30 seconds

Typical OSS functional check entry conditions:		
Auto Transmission Entry Conditions	Minimum	Maximum
Gear selector position	drive	
Engine rpm (above converter stall speed) OR	3000 rpm	
Turbine shaft rpm (if available) OR	1500 rpm	
Output shaft rpm	300 - 650 rpm	
Vehicle speed (if available)	12.5 - 15 mph	

Typical OSS functional check malfunction thresholds:
Circuit/no signal - vehicle is inferred to be moving with positive driving torque and OSS < 100 to 200 rpm for 5 to 30 seconds

Turbine Shaft Speed Sensor Functional Check Operation:	
DTCs	P0715 – TSS circuit P0717 – TSS no signal
Monitor execution	Continuous
Monitor Sequence	None
Sensors OK	OSS, Wheel Speed
Monitoring Duration	30 seconds

Typical TSS functional check entry conditions:		
Auto Transmission Entry Conditions	Minimum	Maximum
Gear selector position	Forward range	
Engine rpm (above converter stall speed) OR	3000 rpm	
Output shaft rpm OR	600 - 650 rpm	
Vehicle speed (if available)	12.5 - 15 mph	

Typical TSS functional check malfunction thresholds:
Circuit/no signal - vehicle is inferred to be moving with positive driving torque and TSS < 200 rpm for 5 – 30 seconds

System voltage:	
DTCs	P0882 – voltage out of range low P0883 – voltage out of range high
Monitoring execution	electrical - continuous

Transmission Fluid Temperature Sensor Functional Check Operation:	
DTCs (non-MIL)	P0712, P0713 or P0710 - Opens/shorts P1711 – in range failures P1783 – Transmission overtemperature (non-MIL fault, TFT > 275 deg F for 5 seconds)
Monitor execution	continuous
Monitor Sequence	none
Sensors OK	ECT substituted if TFT has malfunction
Monitoring Duration	5 seconds for electrical, 600 seconds for functional check

Typical TFT Stuck Low/High check entry conditions:		
Auto Transmission Entry Conditions	Minimum	Maximum
Engine Coolant Temp (hot or cold, not midrange)	> 100 °F	< 20 °F
Time in run mode	500 – 600 sec	
Time in gear, vehicle moving, positive torque	150 sec	
Vehicle Speed	15 mph	
Time with engine off (cold start) OR	420 min	
Engine Coolant Temp AND Trans Fluid Temp (inferred cold start)		122 °F

Typical TFT malfunction thresholds:
Opens/shorts: TFT voltage <0.05 or > 4.6 volts for 5 – 12 seconds TFT Stuck low/high, i.e. TFT stuck at high temperature or stuck at low temperature):

ED_002078G_00001322-00618

Stores a fault code if TFT stabilizes (stops increasing if temperature < 70 deg F, stops decreasing if temperature > 225 deg F) before reaching the temperature region where all MIL tests are enabled (70 to 225 deg F). If TFT remains constant (+/- 2 deg F) for approximately 2.5 minutes of vehicle driving outside the 70 to 225 deg F zone a P0711 fault code will be stored. Old logic used to indicate a "pass" for a single delta, and not test until the normal operating region (70-225 deg F) was reached.

CAN:	
DTCs	U0073 – CAN bus off U0100 – Lost communication with ECM
Monitoring execution	Continuous
Monitoring sequence	none

Transmission Outputs

Transmission Solenoid Power Control (TSPC – provides power to all transmission solenoids:	
DTCs	P0657 – TSPC1 fault, impacts SSA, SSC, SSE P2669 – TSPC2 fault, impacts SSB, SSD, TCC and LPC
Monitoring execution	electrical - continuous
Monitor sequence	Disables individual solenoid circuit fault detection if either above DTC sets and power is removed from all solenoids (one relay, removes power from both TSPC1 and TSPC2 wires)

ED_002078G_00001322-00619

Shift Solenoid Check Operation:	
DTCs	SS A - Electrical: P0750 (Open), P0973 (short to ground), P0974 (short to power) Functional: P0751 (stuck off), P0752 (stuck on) SS B - Electrical: P0755 (Open), P0976 (short to ground), P0977 (short to power) Functional: P0756 (stuck off), P0757 (stuck on) SS C - Electrical: P0760 (Open), P0979 (short to ground), P0980 (short to power) Functional: P0761 (stuck off), P0762 (stuck on) SS D - Electrical: P0765 (Open), P0982 (short to ground), P0983 (short to power) Functional: P0766 (stuck off), P0767 (stuck on) SS E - Electrical: P0770 (Open), P0985 (short to ground), P0986 (short to power) Functional: P0771 (stuck off), P0772 (stuck on)
Monitor execution	electrical - continuous, functional - continuous
Monitor Sequence	None
Sensors OK	TRS, TSS and OSS ok for functional diagnostics
Monitoring Duration	0.5 to 5 seconds for electrical checks, 3 clutch failed to apply (stuck off) or release (stuck on) events for functional check

Typical Shift Solenoid mechanical functional check entry conditions:		
Entry Conditions (with turbine speed)	Minimum	Maximum
Gear ratio calculated	each gear	
Throttle position	positive drive torque	

ED_002078G_00001322-00620

Typical Shift Solenoid mechanical functional check entry conditions:		
Entry Conditions (without turbine speed)	Minimum	Maximum
Rpm drop is obtained	each shift	
Throttle position	positive drive torque	

Typical Shift Solenoid malfunction thresholds:
Electrical circuit check: Output driver feedback indicates an open, short to ground or open circuit for 0.5 – 5.0 seconds

Gear Ratio Check Operation:	
DTCs	P0731 - incorrect gear 1 ratio P0732 - incorrect gear 2 ratio P0733 - incorrect gear 3 ratio P0734 - incorrect gear 4 ratio P0735 - incorrect gear 5 ratio P0729 - incorrect gear 6 ratio P0736 - incorrect reverse ratio 6
Monitor execution	Continuous, in each gear
Monitor Sequence	None
Sensors OK	TSS, OSS, wheel speed
Monitoring Duration	12 seconds

Typical Forward Gear Ratio check entry conditions:		
Entry Conditions	Minimum	Maximum
Gear selector position	forward range, > 8 seconds	
Engine Torque	100 NM	
Throttle position	10%	
Not shifting	> 0.5 seconds	
Engine/input Speed	550 rpm	
Output Shaft Speed	250 rpm	1350 rpm

ED_002078G_00001322-00621

Typical Neutral Gear Ratio check entry conditions:		
Entry Conditions	Minimum	Maximum
Gear selector position	forward range, > 1 second	
Absolute value of Engine rpm – Turbine rpm		150 rpm
Output Shaft Speed		500 rpm

Typical Gear Ratio malfunction thresholds:
Forward gear check: > 20% error in commanded ratio for > 12 seconds

Typical Shift Completion check entry conditions:		
Entry Conditions	Minimum	Maximum
Gear selector position	forward range	
Transmission Fluid Temp	50 °F	
Engine/input Speed	1200 rpm	
Output Shaft Speed	256 rpm	

Typical Shift Completion malfunction thresholds:	
Up-shift rpm check:	rpm does not drop by > 30 rpm
Down-shift rpm check:	rpm does not increase by > 30 rpm
Up-shift rpm check:	rpm increases (flares) by > 300 rpm

ED_002078G_00001322-00622

Torque Converter Clutch Check Operation:	
DTCs	Electrical: P0740 (open), P0742 (short to ground), P0744 (short to power) Functional: P0741 (stuck off), P2758 (stuck on) Note: P2758 is non-MIL, all other TCC DTC's are MIL
Monitor execution	electrical - continuous, mechanical - TCC fails to apply 3 times (stuck off) or fails to release 3 times (stuck on)
Monitor Sequence	None
Sensors OK	TSS, OSS
Monitoring Duration	Electrical – 5 seconds, Functional - 3 lock-up or release events

Typical TCC mechanical functional check stuck off entry conditions:		
Entry Conditions	Minimum	Maximum
Throttle Position	steady	
Engine Torque	positive drive torque	
Transmission Fluid Temp	70 °F	225 °F
Commanded TCC pressure (0 rpm slip)	55 psi	none
Not shifting		

Typical TCC malfunction thresholds:
Electrical circuit check: Output driver feedback circuit does not match commanded driver state for 0.5 – 5.0 seconds Mechanical check, stuck off: Slip across torque converter > 100 for 3 seconds after each of 3 lock events Mechanical check, stuck on: Slip across torque converter < 20 rpm with converter commanded off in at least 3 different gears

ED_002078G_00001322-00623

Pressure Control Solenoid Check Operation:	
DTCs	P0960, P0962, P0963 - PC A opens/shorts P0961 - PC A current range
Monitor execution	Continuous
Monitor Sequence	none
Sensors OK	
Monitoring Duration	Electrical: 5 seconds,

Typical Pressure Control Solenoid mechanical functional check entry conditions:		
Entry Conditions	Minimum	Maximum
Gear ratio calculated	each gear	
Transmission Fluid Temperature	70 °F	225 °F
Throttle Position	positive drive torque	

Typical Pressure Control Solenoid malfunction thresholds:
Electrical circuit check: Output driver feedback circuit does not match commanded driver state for 0.5 – 5.0 seconds Electrical current check: Feedback current out of range for 0.5 seconds

Transmission Control Module (TCM)

TCM	
DTCs	P0604 – RAM fault present P0605 – ROM fault present P0607 – CPU reset fault P06B8 – NVRAM error
Monitoring execution	Once per driving cycle at start-up except reset monitoring which is continuous
Monitor sequence	non

ADLER (chip that controls the transmission solenoids):	
DTCs	P1636 – lost communication (over internal SPI network) with ADLER chip
Monitoring execution	electrical - continuous
Monitor sequence	Transmission enters mechanical limp home (get P, R, N and 5M with open TCC and max line) if the main micro cannot communicate with the ADLER chip

ED_002078G_00001322-00624

Transmission ID (TRID) block (contains solenoid characterization data	
DTCs	P163E – programming error (checksum fault) P163F – TRID data not programmed
Monitoring execution	Start-up – TRID is a portion of flash memory, either it is present at start-up or not
Monitor sequence	Transmission solenoid data missing, enters limited operating mode (P, R, N and 3rd gear with open TCC).

6R140 (RWD) Transmission with external PCM or TCM

Transmission Control System Architecture

Starting in 2011 MY 6R140 replaces 5R110W in Super Duty truck applications.

The 6R140 is a 6-speed, step ratio transmission that is controlled by an external PCM (gas engine applications) or TCM (Diesel engine applications). For Diesel the TCM communicates to the Engine Control Module (ECM), ABS Module, Instrument Cluster and Transfer Case Control Module using the high speed CAN communication link. The TCM incorporates a standalone OBD-II system. The TCM independently processes and stores fault codes, freeze frame, supports industry-standard PIDs as well as J1979 Mode 09 CALID and CVN. The TCM does not directly illuminate the MIL, but requests the ECM to do so. The TCM is located outside the transmission assembly. It is not serviceable with the exception of reprogramming.

Transmission Inputs

Transmission Range Sensor

6R140 uses a Non-contacting Pulse Width Modulated Transmission Range Sensor (TRS) that provides a duty cycle signal for each position. This signal is transmitted at a frequency of 125 Hz. The PCM / TCM decode the duty cycle to determine the driver-selected gear position (Park, Rev, Neutral, OD, 3, 2, 1). This input device is checked for frequency out of range (P0706), duty cycle out of range low (P0707) and duty cycle out of range high (P0708)

Speed Sensors

The Turbine Shaft Speed (TSS) sensor and Output Shaft Speed (OSS) sensor are Hall effect sensors.

The Turbine Shaft Speed sensor is monitored by a rationality test, if engine speed and output shaft speed are high and a gear is engaged, it can be inferred that the vehicle is moving. If there is insufficient output from the TSS sensor a fault is stored (P0715).

The Output Shaft Speed sensor is monitored by a rationality test. If engine speed and turbine speed are high and a gear is engaged, it can be inferred that the vehicle is moving. If there is insufficient output from the OSS sensor a fault is stored (P0720).

Transmission Fluid Temperature

The Transmission Fluid Temperature Sensor is checked for out of range low (P0712), out of range high (P0713), and in-range failures (P0711). P1783 sets if TFT exceeds 275 deg F for 5 seconds, indicating transmission overtemperature (non-MIL failure).

ED_002078G_00001322-00625

Transmission Outputs

Shift Solenoids (SS)

6R140 has 5 shift solenoids:

- SSA – a Variable Force Solenoid (VFS) that controls CB1234 (a brake clutch, grounds an element to the case, that is on in 1st, 2nd, 3rd and 4th gear)
- SSB – a VFS that controls C35R (a rotating clutch on in 3rd, 5th and Reverse)
- SSC – a VFS that controls CB26 (a brake clutch on in 2nd and 6th gear)
- SSD – a VFS that controls CBLR (a brake clutch on in 1st gear with engine braking and Reverse)
- SSE – a VFS that controls C456 (a rotating clutch on in 4th, 5th and 6th gear)

Output circuits are checked for opens, short to ground and short to power faults (codes listed in that order) by the "smart driver" (see ADLER below) that controls the solenoids (SSA P0750, P0973, P0974; SSB P0755, P0976, P0977; SSC P0760, P0979, P0980; SSD P0765, P0982, P0983; SSE P0770, P0985, P0986).

The shift solenoids are also functional tested for stuck on and stuck off failures. This is determined by vehicle inputs such as gear command, and achieved gear (based on turbine and output speed). In general the shift solenoid malfunction codes actually cover the entire clutch system (solenoid, valves, seals and the clutch itself since using ratio there is no way to isolate the solenoid from the rest of the clutch system)

For SSA thru SSE Diagnostics will isolate the fault into clutch functionally (non-electrical) failed off (SSA P0751, SSB P0756, SSC P0761, SSD P0766. SSE P0771) and clutch functionally failed on (SSA: P0752, SSB: P0757, SSC: P0762, SSD: P0767, SSE: P0772).

Gear ratio errors:

If ratio errors are detected that do not match an expected pattern for a failed solenoid then gear ratio error fault codes (1st gear – P0731, 2nd gear – P0732, 3rd gear – P0733, 4th gear – P0734, 5th gear – P0735 or 6th gear – P0729) will be stored.

Torque Converter Clutch

The Torque Converter Clutch (TCC) solenoid is a Variable Force Solenoid. TCC solenoid circuit is checked electrically for open, short to ground and short to power circuit faults internally by the "smart driver" that controls the solenoids (P0740, P0742, P0744).

The TCC solenoid is checked functionally for stuck off faults by evaluating torque converter slip under steady state conditions when the torque converter is fully applied. If the slip exceeds the malfunction thresholds when the TCC is commanded on, a TCC malfunction is indicated (P0741).

The TCC solenoid is monitored functionally for stuck on faults (P2758) by monitoring for lack of clutch slip when the TCC is commanded off, but this code is non-MIL because while a stuck on TCC solenoid may cause driveability complaints and/or cause engine stalls it does not impact emissions or fuel economy.

Electronic Pressure Control (EPC)

The EPC solenoid is a variable force solenoid that controls line pressure in the transmission. The EPC solenoid is monitored for open, short to ground or short to power faults by the "smart driver" that controls the solenoid. If a short to ground (low pressure) is detected, a high side switch will be opened. This switch removes power from all 7 VFSs, providing Park, Reverse, Neutral, and 5M (in all forward ranges) with maximum line pressure based on manual lever position. This solenoid is tested for open (P0960), short to ground (P0962), and short to power (P0963) malfunctions.

ED_002078G_00001322-00626

Transmission Solenoid Power Controll (TSPC)

6F140 PCM or TCM has a internal high side switch called TSPC that can be used to remove power from all 7 solenoids simultaneously. If the high side switch is opened, all 7 solenoids will be electrically off, providing Park, Reverse, Neutral, and 5M (in all forward ranges) with maximum line pressure based on manual lever position.

Due to current limitations TSPC is split into 2 pins / wires at the PCM / TCM. TSPC A provides power to SSA, SSC and SSE. TSPC B provides power to SSB, SSD, TCC and LPC. Each wire can be tested independently; P0657 sets for an issue with TSPC-A, P2669 sets for an issue with TPSC-B.

Although there are 2 pins and wires between the PCM / TCM and the transmission bulkhead connector the PCM / TCM contains only one TSPC internally – so the FMEM for either wire being failed is to open TSCP inside the PCM / TCM, which removes power from all 7 solenoids, providing P, R, N and 5th gear with open TCC and max line as FMEM for any TPSC faults.

ADLER (chip that controls all 7 solenoids) diagnostics:

The solenoids are controlled by an ADLER chip. The main micro sends commanded solenoid states to the ADLER, and receives back solenoid circuit fault information.

If communication with the ADLER is lost a P1636 fault code will be stored. If this failure is detected the states of the solenoids are unknown, so the control system will open the high side switch (removes power from all the solenoids), providing P, R, N and 5M with open TCC and max line pressure.

TRID Block

The TRID block is a portion of flash memory that contains solenoid characterization data tailored to the specific transmission to improve pressure accuracy.

The TRID block is monitored for two failures:

- TRID block checksum error / incorrect version of the TRID (P163E)
- TRID block not programmed (P163F)

If the TRID block is unavailable FMEM action limits operation to P, R, N and 3rd gear based on manual lever position until the issue is correct.

Transmission Control Module (TCM – Diesel only)

The TCM has the same module diagnostics as a PCM:

P0604 - Powertrain Control Module Random Access Memory (RAM) Error indicates the Random Access Memory read/write test failed.

P0605 - Powertrain Control Module Read Only Memory (ROM) Error indicates a Read Only Memory check sum test failed.

P0607 - Powertrain Control Module Performance indicates incorrect CPU instruction set operation, or excessive CPU resets.

P06B8 - Internal Control Module Non-Volatile Random Access Memory (NVRAM) Error indicates Permanent DTC check sum test failed

ED_002078G_00001322-00627

.

CAN Communications Error

The TCM receives information from the ECM via the high speed CAN network. If the CAN link or network fails, the TCM no longer has torque or engine speed information available. The TCM will store a U0073 fault code and will illuminate the MIL immediately (missing engine speed) if the CAN Bus is off. The TCM will store a U0100 fault code and will illuminate the MIL immediately (missing engine speed) if it stops receiving CAN messages from the ECM. A U0401 fault codes will be stored if the ECM sends invalid/faulted information for the following CAN message items: engine torque, pedal position.

TCM voltage

If the system voltage at the TCM is outside of the specified 9 to 16 volt range, a fault will be stored (P0882, P0883).

On Board Diagnostic Executive

The On-Board Diagnostic (OBD) Executive is a portion of the PCM strategy that manages the diagnostic trouble codes and operating modes for all diagnostic tests. It is the "traffic cop" of the diagnostic system. The Diagnostic Executive performs the following functions:

- Stores freeze frame and "similar condition" data.
- Manages storage and erasure of Diagnostic Trouble Codes as well as MIL illumination.
- Controls and co-ordinates the execution of the On-Demand tests: Key On Engine Off (KOEO) and Key On Engine Running (KOER).
- Performs transitions between various states of the diagnostic and powertrain control system to minimize the effects on vehicle operation.
- Interfaces with the diagnostic test tools to provide diagnostic information (I/M readiness, various J1979 test modes) and responses to special diagnostic requests (J1979 Mode 08 and 09).
- Tracks and manages indication of the driving cycle which includes the time between two key on events that include an engine start and key off.

The diagnostic executive also controls several overall, global OBD entry conditions.

- The battery voltage must fall between 9.0 and 16.25 volts to initiate monitoring cycles.
- The engine must be started to initiate the engine started, engine running, and engine off monitoring cycles.
- The Diagnostic Executive suspends OBD monitoring when battery voltage falls below 11.0 volts.

The diagnostic executive controls the setting and clearing of pending and confirmed DTCs.

- A pending DTC and freeze frame data is stored after a fault is confirmed on the first monitoring cycle. If the fault recurs on the next driving cycle, a confirmed DTC is stored, freeze frame data is updated, and the MIL is illuminated. If confirmed fault free on the next driving cycle, the pending DTC and freeze frame data is erased on the next power-up.
- Pending DTCs will be displayed as long as the fault is present. Note that OBD-II regulations required a complete fault-free monitoring cycle to occur before erasing a pending DTC. In practice, this means that a pending DTC is erased on the next power-up after a fault-free monitoring cycle.
- After a confirmed DTC is stored and the MIL has been illuminated, three consecutive confirmed fault-free monitoring cycles must occur before the MIL can be extinguished on the next (fourth) power-up. After 40 engine warm-ups, the DTC and freeze frame data is erased.

The diagnostic executive controls the setting and clearing of permanent DTCs.

- A permanent DTC is stored when a confirmed DTC is stored, the MIL has been illuminated, and there are not yet six permanent DTCs stored.

ED_002078G_00001322-00628

- After a permanent DTC is stored, three consecutive confirmed fault-free monitoring cycles must occur before the permanent DTC can be erased.
- After a permanent DTC is stored, one confirmed fault-free monitoring cycle must occur, following a DTC reset request, before the permanent DTC can be erased. For 2010MY and beyond ISO 14229 programs a driving cycle including the following criteria must also occur, following the DTC reset request, before a permanent DTC can be erased:
    - Cumulative time since engine start is greater than or equal to 600 seconds;
    - Cumulative vehicle operation at or above 25 miles per hour occurs for greater than or equal to 300 seconds (medium-duty vehicles with diesel engines certified on an engine dynamometer may use cumulative operation at or above 15% calculated load in lieu of at or above 25 miles per hour for purposes of this criteria); and
    - Continuous vehicle operation at idle (i.e., accelerator pedal released by driver and vehicle speed less than or equal to one mile per hour) for greater than or equal to 30 seconds.
- A permanent DTC can not be erased by a KAM clear (battery disconnect). Additionally, its confirmed DTC counterpart will be restored after completion of the KAM reset (battery reconnect).

Exponentially Weighted Moving Average

Exponentially Weighted Moving Averaging is a well-documented statistical data processing technique that is used to reduce the variability on an incoming stream of data. Use of EWMA does not affect the mean of the data; however, it does affect the distribution of the data. Use of EWMA serves to “filter out” data points that exhibit excessive and unusual variability and could otherwise erroneously light the MIL.

The simplified mathematical equation for EWMA implemented in software is as follows:

New Average = [New data point * “filter constant”] + [(1 - “filter constant”) * Old Average]

This equation produces an exponential response to a step-change in the input data. The "Filter Constant" determines the time constant of the response. A large filter constant (i.e. 0.90) means that 90% of the new data point is averaged in with 10% of the old average. This produces a very fast response to a step change. Conversely, a small filter constant (i.e. 0.10) means that only 10% of the new data point is averaged in with 90% of the old average. This produces a slower response to a step change.

When EWMA is applied to a monitor, the new data point is the result from the latest monitor evaluation. A new average is calculated each time the monitor is evaluated and stored in Keep Alive Memory (KAM). This normally occurs each driving cycle. The MIL is illuminated and a DTC is stored based on the New Average store in KAM.

In order to facilitate repair verification and DDV demonstration, 2 different filter constants are used. A “fast filter constant” is used after KAM is cleared/DTCs are erased and a “normal filter constant” is used for normal customer driving. The “fast filter” is used for 2 driving cycles after KAM is cleared/DTCs are erased, and then the “normal filter” is used. The “fast filter” allows for easy repair verification and monitor demonstration in 2 driving cycles, while the normal filter is used to allow up to 6 driving cycles, on average, to properly identify a malfunction and illuminate the MIL.

In order to relate filter constants to driving cycles for MIL illumination, filter constants must be converted to time constants. The mathematical relationship is described below:

Time constant = [(1 / filter constant) - 1] * evaluation period

The evaluation period is a driving cycle. The time constant is the time it takes to achieve 68% of a step-change to an input. Two time constants achieve 95% of a step change input.

ED_002078G_00001322-00629

I/M Readiness Code

The readiness function is implemented based on the J1979 format. Clearing codes using a scan tool results in the various I/M readiness bits being set to a “not-ready” condition. As each non-continuous monitor completes a full diagnostic check, the I/M readiness bit associated with that monitor is set to a “ready” condition. This may take one or two driving cycles based on whether malfunctions are detected or not.

Power Take Off Mode

While PTO mode is engaged, the I/M readiness bits are set to a “not-ready” condition. When PTO mode is disengaged, the I/M readiness bits are restored to their previous states prior to PTO engagement. During PTO mode, only CCM circuit checks continue to be performed.

Serial Data Link MIL Illumination

The OBD-II diagnostic communication messages utilize an industry standard 500 kbps CAN communication link.

The instrument cluster on some vehicles uses the same CAN data link to receive and display various types of information from the PCM. For example, the engine coolant temperature information displayed on the instrument cluster comes from the same ECT sensor used by the PCM for all its internal calculations.

These same vehicles use the CAN data link to illuminate the MIL rather than a circuit, hard-wired to the PCM. The PCM periodically sends the instrument cluster a message that tells it to turn on the MIL, turn off the MIL or blink the MIL. If the instrument cluster fails to receive a message within a 5-second timeout period, the instrument cluster itself illuminates the MIL. If communication is restored, the instrument cluster turns off the MIL after 5 seconds. Due to its limited capabilities, the instrument cluster does not generate or store Diagnostic Trouble Codes.

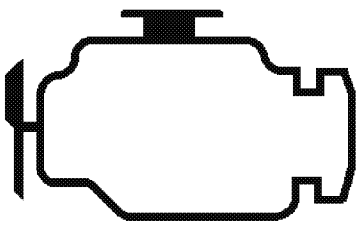

Calculated Load Value

$$\text{LOAD_PCT (PID \$04)} = \frac{\text{Current Calculated Torque}}{\text{Maximum Engine Torque at conditions}}$$

Where:

- Current Calculation of torque is derived from the injected quantity of torque producing fuel and engine speed.
- Maximum Engine Torque is derived from the maximum curve.

I/M Readiness

The readiness function is implemented based on the SAE J1979/ISO 15031-5 format. Clearing codes using a scan tool results in the various I/M readiness bits being set to a "not-ready" condition. As each non-continuous monitor completes a full diagnostic check, the I/M readiness bit associated with that monitor is set to a "ready" condition. This may take one or two driving cycles based on whether malfunctions are detected or not. The readiness bit for comprehensive component monitoring is immediately considered complete since they are continuous monitors. The table below shows which monitors must complete for I/M readiness.

I/M Readiness bit	Controlling Monitor
Boost Pressure	P0234 P0299 P026A P132B P1249
CCM	Always Ready
EGR	P0401 P0402 P2457 P24A5
Exhaust Gas Sensors	P0139 C3994 P229F P06EB P229E
Fuel System	P0088 P0093 P0088 C2414 P02CC P02D0 P02D8 P02CE P02D6 P02D4 P02D2 P02DA
HC Catalyst	P0420
Misfire	P0301 P0303 P0307 P0302 P0306 P0305 P0304 P0308 P0300
Nox Catalyst	P20EE P249C
PM Catalyst	P244A P249F P2002 P2459

ED_002078G_00001322-00631

Power Take Off Mode

A Power Take-Off (PTO) unit refers to an engine driven output provision for the purposes of powering auxiliary equipment (e.g., a dump-truck bed, aerial bucket, or tow-truck winch). The OBD-II regulations have historically accommodated PTO by requiring the software to set all I/M readiness bits to "not complete" when PTO was engaged and reset them to their previous state when PTO was disengaged.

The 2013 MY OBD-II regulations have changed the requirement for PTO mode. This is in reaction industry request to accommodate PTO while the vehicle is stationary (stationary PTO) or while the vehicle is moving (mobile PTO). In mobile PTO, some OBD monitors may not run or may run at reduced frequency. The changes to the OBD-II regulations accommodate vehicles being I/M tested while PTO is engaged.

For the 2013 MY, the OBD II system is required to track the cumulative engine runtime with PTO active and set all the OBD II I/M readiness bits to “not complete” if 750 minutes of cumulative engine runtime with PTO active has occurred and all OBD monitors have not yet completed. The PTO timer pauses whenever PTO changes from active to not active and resumes counting when PTO is re-activated. The PTO timer is reset to zero after all the affected monitors have completed. If an OBD monitor is completely disabled by PTO mode, the affected IUMPR numerator and denominator must also be disabled.

This new requirement provides a 750 minute allowance to run all OBD monitors before all the I/M readiness bits are set to “not complete” in order to better accommodate vehicles that have monitors that run with reduced frequency in PTO mode or have monitors that don’t run at all.

In-Use Monitor Performance Ratio

Manufacturers are required to implement software algorithms that track in-use performance for each of the following components:

The table below shows which monitors must complete to increment each IUMPR numerator.

IUMPR Counter Numerator	Controlling Monitor
NMHCCatalyst (500 Mile Denominator)	P0420
NOxCatalyst	P20EE
PMFilter	P2459 P24A2 P24A0 P2457 P244A P2002
EGSensor	P0139 P2201 P2A01
EGR System Monitoring (No VCT currently on Ford Diesel Products)	P2457 P24A5
Boost Pressure	P0299 P1247 P0234 P1249 P132B
Fuel System	P02DA P02CC P02D0 P02D8 P02CE P02D6 P02D4 P02D2

ED_002078G_00001322-00632

Mode$06 Results

Mode$06 results are included for:

Mode$06 Test Result	Controlling Monitor
HEGO 11	P2201 P0139 P2A01 P229F
Cat Bank 1	P0420
Diesel EGR	P0401 P0402 P2457 P24A5
Fuel System	P02CD P02D1 P02D9 P02CF P0170 P02D7 P02D5 P02D3P02DB
Boost Pressure Control	P026A P132B P0234 P0299 P1249 P00BC P00BD
Nox Catalyst	P20EE P207F
Misfire	P0308 P0301 P0303 P0307 P0302 P0306 P0305 P0304
PM Catalyst	P2459 P2002 P24A2

ED_002078G_00001322-00633

OBD Connector Locations

Ford Motor Company's 2014 MY products comply with the location and means of access practices set forth in SAE J1962 and are in compliance with the location and means of access requirements of 40 CFR 86.094 and the California OBD II regulations.

Ford Motor Company
Preliminary 2014 MY OBD Group Summary

OBD II or HD OBD Group	Strategy Path	Test Group	Vehicle Line(s) (market & exh. emissions std. for reference only)	ARB Selection Category	Job #1 Def. Status
Small Vehicle FWD Port Fuel Injection (PFI)	BMC	**EFMXV01.6VDC**	**1.6L Fiesta TiVCT [50S-T2B4/ULEV2q]**	Rep. Cal., PVE	None
	JZD	EFMXT02.52ET	2.5L Escape iVCT [50S-T2B5/ULEV2]		A/F Cylinder Imbalance Monitor
	CDF	EFMXV02.5VEX	2.5L Fusion iVCT [50S-T2B5/ULEV2]		A/F Cylinder Imbalance Monitor
	VNB	EFMXT02.52D8	2.5L Transit Connect iVCT [50S-T2B5/ULEV2]		A/F Cylinder Imbalance Monitor

Ford Motor Company
Preliminary 2014 MY OBD Group Summary

OBD II or HD OBD Group	Strategy Path	Test Group	Vehicle Line(s) (market & exh. emissions std. for reference only)	ARB Selection Category	Job #1 Def. Status
Small Vehicle FWD Direct Injection (DI)	BXM	**EFMXV01.0VD1**	**1.0L Fiesta TiVCT GTDI [50S-T2B4/ULEV2q]**	Rep. Cal, DDV, PVE	
	GDF	**EFMXV02.0VE7**	**2.0L Taurus / MKT Livery TiVCT GTDI [50S-T2B5/ULEV2]**	Interim Cal.	PCV Monitoring, Purge Monitoring
	BST	EFMXV01.6VDD	1.6L Fiesta ST TiVCT GTDI [50S-T2B4/ULEV2q]		PCV Monitoring, Purge Monitoring
	GHB	EFMXT01.62E9	1.6L Escape TiVCT GTDI [50S-T2B5/ULEV2]		PCV Monitoring, Purge Monitoring, Catalyst Monitor Freeze Frame Data
	GKB	EFMXV01.5VZ1	1.5L Fusion TiVCT GTDI A/T [50S-T2B3/SULEV2]		PCV Monitoring, Purge Monitoring
	GKB	EFMXV01.5VDG	1.5L Fusion TiVCT GTDI A/T [50S-T2B5/LEV2]		PCV Monitoring, Purge Monitoring
	GHF / GHM (Auto / Man)	EFMXV01.6VDF	1.6L Fusion TiVCT GTDI M/T [50S-T2B5/ULEV2]		PCV Monitoring, Purge Monitoring, Catalyst Monitor Freeze Frame Data
	GHB	EFMXT01.62D7	1.6L Transit Connect TiVCT GTDI [50S-T2B5/ULEV2]		PCV Monitoring, Purge Monitoring, Catalyst Monitor Freeze Frame Data
	HJB / HFC	EFMXT02.02EX	2.0L Explorer / Edge TiVCT GTDI [50S-T2B5/ULEV2]		PCV Monitoring, Purge Monitoring
	GFB	EFMXT02.02E1	2.0L Escape TiVCT GTDI [50S-T2B5/ULEV2]		PCV Monitoring, Purge Monitoring, Catalyst Monitor Freeze Frame Data
	GFB	EFMXT02.02EM	2.0L Escape TiVCT GTDI [50S-T2B5/ULEV2]		PCV Monitoring, Purge Monitoring, Catalyst Monitor Freeze Frame Data
	HFC	EFMXV02.0VZ2	2.0L Focus DI-TiVCT [50S-T2B3/SULEV2]		Catalyst Monitor Freeze Frame Data
	HFC	EFMXV02.0VE3	2.0L Focus DI-TiVCT FFV [Fed-T2B5]		Catalyst Monitor Freeze Frame Data
	GMB	EFMXV02.0VER	2.0L Focus ST GTDI [50S-T2B5/ULEV2]		PCV Monitoring, Purge Monitoring, Catalyst Monitor Freeze Frame Data, Misfire Monitor - Capability
	HFC	EFMXV02.0VD2	2.0L Focus DI-TiVCT FFV [50S-T2B4/ULEV2q]		Catalyst Monitor Freeze Frame Data
	GTF / GSW (Fusion/ MKZ)	EFMXV02.0VEM	2.0L Fusion / MKZ TiVCT GTDI [50S-T2B5/ULEV2] MCR		PCV Monitoring, Purge Monitoring, Catalyst Monitor Freeze Frame Data (GTF only)

Ford Motor Company
Preliminary 2014 MY OBD Group Summary

OBD II or HD OBD Group	Strategy Path	Test Group	Vehicle Line(s) (market & exh. emissions std. for reference only)	ARB Selection Category	Job #1 Def. Status
Large Vehicle / Crossover Utility Vehicle (CUV) FWD PFI	FVD	**EFMXT03.76BF**	**3.7L Transit TiVCT FFV <10K [50S-T2B8/ULEV2q]**	Rep. Cal., DDV, PVE	
		EFMXT03.76BU	3.7L Transit TiVCT Gas-only <10K [50S-chHDGasFIN/ULEV2]		
		EFMXT03.77BU	3.7L Transit TiVCT Gas-only >10K [50S-chHDGasFIN/ULEV2]		
	KHC (non-MKZ) / CHF (MKZ only)	**EFMXV03.7VE8**	**3.5L Taurus / Flex / Police Interceptor Sedan & 3.7L MKZ / MKS / MKT / MKT Livery / Police Interceptor Sedan TiVCT [50S-T2B5/ULEV2]**	Interim Cal.	Rear O2 Response Monitoring (KHC only), Catalyst Monitor Freeze Frame Data, A/F Cylinder Imbalance Monitor
	KNC	EFMXT03.72EE	3.5 & 3.7L Edge & 3.7L MKX TiVCT [50S-T2B5/ULEV2]		Rear O2 Response Monitoring, Catalyst Monitor Freeze Frame Data, A/F Cylinder Imbalance Monitor
	FVD	EFMXT03.75HF	3.7L Transit TiVCT FFV MDPV [50S-T2B8/ULEV2q]		Rear O2 Response Monitoring
	KMD	EFMXT03.73E8	3.5L Explorer & 3.7L Police Interceptor Utility TiVCT [50S-T2B5/ULEV2]		Rear O2 Response Monitoring, Catalyst Monitor Freeze Frame Data, A/F Cylinder Imbalance Monitor
		EFMXT03.73DM	3.5L Explorer FFV & 3.7L Police Interceptor Utility TiVCT FFV [Fed-T2B5]		Rear O2 Response Monitoring, Catalyst Monitor Freeze Frame Data, A/F Cylinder Imbalance Monitor
	KHC	EFMXV03.7VEA	3.5L Taurus / Police Interceptor Sedan & 3.7L Police Interceptor Sedan TiVCT FFV [Fed-T2B5]		Rear O2 Response Monitoring, Catalyst Monitor Freeze Frame Data, A/F Cylinder Imbalance Monitor
	KRC	EFMXV03.7VHJ	3.7L MKT Limo / Hearse TiVCT [50S-T2B8/LEV2]		Rear O2 Response Monitoring, Catalyst Monitor Freeze Frame Data, A/F Cylinder Imbalance Monitor
Large Vehicle / CUV FWD DI	KHD (Non-Explorer) / KJD (Explorer)	**EFMXV03.5VEP**	**3.5L Taurus / Police Interceptor Sedan / MKS / Flex / MKT / Explorer iVCT GTDI [50S-T2B5/ULEV2]**	Rep. Cal.	PCV Monitoring, Catalyst Monitor Freeze Frame (Flex / MKT only)
Large Car RWD	FNF, FMF	**EFMXV03.7VDT**	**3.7L Mustang TiVCT [50S-T2B4/ULEV2q]**	Rep. Cal.	Catalyst Monitor Freeze Frame Data
	FSF / FPF	EFMXV05.0VD5	5.0L Mustang TiVCT [50S-T2B4/ULEV2q]		Auto - Catalyst Monitor Freeze Frame Data & Fuel Pump Monitoring Manual - Fuel Pump Monitoring
	FGF	EFMXV05.8VE2	5.8L Mustang [50S-T2B5/LEV2]		Manual - Misfire Monitoring, Catalyst Monitor Freeze Frame Data, & Fuel Pump Monitoring

Ford Motor Company
Preliminary 2014 MY OBD Group Summary

OBD II or HD OBD Group	Strategy Path	Test Group	Vehicle Line(s) (market & exh. emissions std. for reference only)	ARB Selection Category	Job #1 Def. Status
Hybrid Electric / Plug-In Hybrid Electric Vehicle	HPG (Fusion) / HGX (C-Max)	**EFMXV02.0VZP**	**2.0L Fusion / C-Max PHEV [50S-T2B3/SULEV2]**	Rep. Cal.	Fault Code Assignments for Comprehensive Components, Regenrative Braking Disablement, Battery Pack Current Sensors, Battery Pack Cooling Fan Monitoring
	HGR (Fusion/MKZ) / HGS (C-Max)	EFMXV02.0VZL	2.0L Fusion / MKZ / C-Max FHEV [50S-T2B3/ULEV2q]		None
		EFMXV02.0VZN	2.0L Fusion / MKZ / C-Max FHEV [50S-T2B3/ULEV2q]		None
		EFMXV02.0VZS	2.0L Fusion / MKZ / C-Max FHEV [50S-T2B3/SULEV2]		None
Large Truck Port Fuel Injection	KPC	**EFMXT03.73DP**	**3.7L F-150 TiVCT FFV [50S-T2B4/ULEV2q]**	Rep. Cal., PVE	Catalyst Monitor Freeze Frame Data, Rear O2 Response Monitoring
	BRB	EFMXT06.27HL	6.2L F-series Super Duty FFV [50S-T2B8/ULEV2q]		Fuel Pump Monitoring, Catalyst Monitor Freeze Frame Data
	KTC	EFMXT05.03D7	5.0L F-150 TiVCT FFV [50S-T2B4/ULEV2q]		Catalyst Monitor Freeze Frame Data
	BBH	EFMXT06.24D2	6.2L F-150 SVT Raptor / Harley [50S-T2B4/ULEV2q]		None
	RXH	EFMXT05.44BC	5.4L Expedition / Navigator / Exp. Max / Nav. L 3V FFV [50S-T2B4/ULEV2q]		Fuel Pump Monitoring, Catalyst Monitor Freeze Frame Data
		EFMXT05.44HY	5.4L Expedition / Navigator / Exp. Max / Nav. L 3V FFV [Fed-T2B8]		Fuel Pump Monitoring, Catalyst Monitor Freeze Frame Data
		EFMXT05.45BR	5.4L Exp. Max / Nav. L Limo 3V FFV [50S-T2B8/ULEV2q]		Fuel Pump Monitoring, Catalyst Monitor Freeze Frame Data
	TXA	EFMXT04.65H9	4.6L E-series MDPV and non-MDPV FFV [50S-T2B8/ULEV2q]		Catalyst Monitor Freeze Frame Data, Fuel Pump Monitoring, Rear O2 Response Monitoring
		EFMXT05.45HK	5.4L E-series MDPV and non-MDPV FFV [50S-T2B8/ULEV2q]		Catalyst Monitor Freeze Frame Data, Fuel Pump Monitoring, Rear O2 Response Monitoring
		EFMXT05.45HL	5.4L E-series MDPV and non-MDPV Ambulance [50S-T2B8/ULEV2q]		Catalyst Monitor Freeze Frame Data, Fuel Pump Monitoring, Rear O2 Response Monitoring
	TSA	EFMXE05.4AFD	5.4L E-series FFV <14K [50S-edHDGasFIN/edULEV]		Catalyst Monitor Freeze Frame Data, Fuel Pump Monitoring, Rear O2 Response Monitoring
		EFMXE05.4AFF	5.4L E-series Ambulance <14K [50S-edHDGasFIN/edULEV]		Catalyst Monitor Freeze Frame Data, Fuel Pump Monitoring, Rear O2 Response Monitoring
	TFC	EFMXT06.85HT	6.8L E-series MDPV and non-MDPV [50S-T2B8/ULEV2q]		Fuel Pump Monitoring
		EFMXE06.8AFA	6.8L E-series <14K [50S-edHDGasFIN/edULEV]		Fuel Pump Monitoring

Ford Motor Company
Preliminary 2014 MY OBD Group Summary

OBD II or HD OBD Group	Strategy Path	Test Group	Vehicle Line(s) (market & exh. emissions std. for reference only)	ARB Selection Category	Job #1 Def. Status
Large Truck Direct Injection	KVD	**EFMXT03.56BT**	**3.5L Transit TiVCT GTDI <10K [50S-chHDGasFIN/ULEV2]**	Rep. Cal, Backup PVE	
	KGC	**EFMXT03.54DX**	**3.5L F-150 TiVCT GTDI [50S-T2B5/LEV2]**	Interim Cal.	
	KVD	EFMXT03.55HV	3.5L Transit TiVCT GTDI MDPV [50S-T2B8/ULEV2q]		
	KVD	EFMXT03.57BT	3.5L Transit TiVCT GTDI >10K [50S-chHDGasFIN/ULEV2]		
Diesel OBD II (Bosch controls)	DDC	**EFMXD06.761A**	**6.7L F-series Super Duty Diesel Comp. <10K [50S-chHDDsFIN/ULEV2]**	Rep. Cal.	Particulate Matter Filter Monitor, NMHC Converting Catalyst Monitor, Global Fuel System Injection Quantity and Timing Control, Thermostat Diagnostic (P2610)
		EFMXD06.771C	6.7L F-series Super Duty Diesel Comp. >10K [50S-chHDDsFIN/ULEV2]		Particulate Matter Filter Monitor, Global Fuel System Injection Quantity and Timing Control, Thermostat Diagnostic (P2610)
		EFMXH06.7A24	6.7L F-series Super Duty Diesel Incomp. <14K [50S-edHDDsFIN/edULEV2]		Particulate Matter Filter Monitor, SCR Catalyst Monitor, Thermostat Diagnostic (P2610), Upstream NOx Sensor Diagnostic
Diesel OBD II (Bosch / Continental controls)	DDE	**EFMXD03.26BV**	**3.2L Transit DI Diesel Comp. <10K [50S-chHDDsFIN/ULEV2]**	Rep. Cal., DDV, PVE	
		EFMXD03.27BV	3.2L Transit DI Diesel Comp. >10K [50S-chHDDsFIN/ULEV2]		
HD OBD Diesel	DDC	**EFMXH06.7B23**	**6.7L F-series Super Duty Diesel Incomp. >14K [50S-edHDDsFIN/edHDDsFIN]**	Rep. Cal.	SCR Catalyst Monitor, Thermostat Diagnostic (P2610), Upstream NOx Sensor Diagnostic
HD OBD Gasoline	TEZ (F-Series)	**EFMXE06.8BW5**	**6.8L F-series Super Duty / Motorhome / Step Van 3V Inc. >14K [50S-edHDGasFIN/edHDGasFIN]**	Rep. Cal., DDE, PVE	None
	TFZ (F53/F59)			(Official HD DDE)	
	TFC	EFMXE06.8BWX	6.8L E-series >14K [50S-edHDGasFIN/edHDGasFIN]		None

NOTES:

Rep. Cal.: Representative Calibration
DDE: Durability Demonstration Test Engine
DDV: Durability Demonstration Test Vehicle
PVE: Production Evaluation Vehicle

Rear Wheel Drive :RWD
Front Wheel Drive :FWD
Heavy Duty: HD

Index for Single Roll Settings 2014 Model Year Car

Carline	Program Code
Fiesta Auto	B299N Auto
Fiesta Auto SFE	B299N Auto SFE
Fiesta Manual	B299N Manual
Fiesta ST Manual	B299N ST Manual
Focus A/T AGS	C346N AGS Auto
Focus SFE A/T AGS	C346N SFE AGS Auto
Focus M/T AGS	C346N AGS Man
Focus ST M/T AGS	C346N ST AGS Man
Focus BEV	C346N BEV
Fusion FWD AGS	CD391 FWD AGS
Fusion FWD AGS S/S	CD391 FWD AGS S/S
Fusion FWD No AGS	CD391 FWD No AGS
MKZ FWD AGS	CD533 FWD AGS
MKZ FWD No AGS	CD533 FWD No AGS
Fusion AWD AGS	CD391 AWD AGS
Fusion AWD No AGS	CD391 AWD No AGS
MKZ AWD AGS	CD533 AWD AGS
MKZ AWD No AGS	CD533 AWD No AGS
C-MAX P-HEV FWD	C344 P-HEV FWD
C-MAX F-HEV FWD	C344 F-HEV FWD
Fusion P-HEV FWD	CD391 P-HEV FWD
Fusion F-HEV FWD	CD391 F-HEV FWD
MKZ F-HEV FWD	CD533 F-HEV
Taurus FWD	D258 FWD
Taurus AWD	D258 AWD
Taurus SHO AWD	D258 SHO AWD
Special Service Police FWD	D258 SSV FWD
Police Interceptor Sedan FWD / AWD	D258 Police FWD / AWD
MKS FWD / AWD	D385 FWD / AWD
Mustang Auto	S197 Auto
Mustang Manual	S197 Manual
Mustang GT Auto	S197 GT Auto
Mustang GT Manual	S197 GT Manual
Mustang California Special Auto	S197 California Special Auto
Mustang California Special Manual	S197 California Special Manual
Mustang Shelby GT500	S197 Shelby GT500

ED_002078G_00001322-00640

ROADLOAD CERTIFICATION SPECIFICATIONS *2014 B299 Auto*

Vehicle Description							Track Coefficients			
								3 Term coefs		
Body	Eng	Trans	Drive	Tire	ETW	HP@50	55-45 CDT	f0	f1	f2
4DR	1.6	DPS6	FWD	P 185 60R 15	2750	9.6	17.68	13.64	0.3546	0.01635
					2875	9.7	18.27	14.36	0.3570	0.01635
					3000	9.9	18.84	15.09	0.3594	0.01635
					3125	10.0	19.40	15.82	0.3618	0.01635
					3250	10.1	19.94	16.56	0.3642	0.01635
				P 195 50R 16	2750	9.9	17.19	16.19	0.3460	0.01631
					2875	10.0	17.75	17.00	0.3478	0.01631
					3000	10.1	18.31	17.81	0.3495	0.01631
					3125	10.3	18.85	18.63	0.3512	0.01630
					3250	10.4	19.37	19.44	0.3530	0.01630
5DR	1.6	DPS6	FWD	P 185 60R 15	2750	9.8	17.34	13.60	0.3577	0.01686
					2875	9.9	17.93	14.32	0.3601	0.01685
					3000	10.0	18.50	15.05	0.3625	0.01685
					3125	10.2	19.05	15.78	0.3649	0.01685
					3250	10.3	19.59	16.51	0.3673	0.01685
				P 195 50R 16	2750	10.1	16.87	16.15	0.3491	0.01682
					2875	10.2	17.44	16.96	0.3509	0.01681
					3000	10.3	17.98	17.77	0.3526	0.01681
					3125	10.4	18.52	18.59	0.3543	0.01681
					3250	10.6	19.04	19.40	0.3561	0.01681

ROADLOAD CERTIFICATION SPECIFICATIONS *2014 B299 Auto SFE*

Vehicle Description								3 Term coefs		
Body	Eng	Trans	Drive	Tire	ETW	HP@50	55-45 CDT	f0	f1	f2
4 DR	1.6	Auto	FWD	P 185 60R 15	2750	9.1	18.68	12.44	0.3452	0.01546
SFE					2875	9.2	19.31	13.10	0.3474	0.01546
					3000	9.3	19.93	13.76	0.3495	0.01546
					3125	9.4	20.53	14.42	0.3517	0.01546
					3250	9.5	21.12	15.09	0.3539	0.01546
5 DR	1.6	Auto	FWD	P 185 60R 15	2750	9.4	18.16	12.39	0.3497	0.01619
SFE					2875	9.5	18.78	13.04	0.3519	0.01619
					3000	9.6	19.39	13.70	0.3540	0.01618
					3125	9.7	19.98	14.36	0.3562	0.01618
					3250	9.8	20.56	15.03	0.3584	0.01618

ROADLOAD CERTIFICATION SPECIFICATIONS ***2014 B299 Manual Non ST***

Vehicle Description							Track Coefficients		3 Term coefs		
Body	Eng	Trans	Drive	Tire	ETW	HP@50	55-45 CDT	f0	f1	f2
4 DR	1.6	IB5	FWD	P 185 60R 15	2750	9.7	17.50	14.08	0.3316	0.01693
					2875	9.8	18.08	14.80	0.3340	0.01693
					3000	10.0	18.66	15.52	0.3364	0.01693
					3125	10.1	19.22	16.25	0.3388	0.01692
					3250	10.2	19.76	16.99	0.3412	0.01692
				P 195 50R 16	2750	10.0	17.02	16.63	0.3230	0.01689
					2875	10.1	17.58	17.44	0.3247	0.01689
					3000	10.2	18.13	18.25	0.3264	0.01689
					3125	10.4	18.66	19.07	0.3282	0.01689
					3250	10.5	19.19	19.88	0.3299	0.01688
5 DR	1.6	IB5	FWD	P 185 60R 15	2750	9.9	17.18	14.04	0.3348	0.01743
					2875	10.0	17.76	14.76	0.3371	0.01743
					3000	10.1	18.32	15.48	0.3395	0.01743
					3125	10.3	18.87	16.21	0.3419	0.01743
					3250	10.4	19.41	16.95	0.3443	0.01743
				P 195 50R 16	2750	10.2	16.71	16.59	0.3261	0.01740
					2875	10.3	17.27	17.40	0.3278	0.01739
					3000	10.4	17.81	18.21	0.3296	0.01739
					3125	10.5	18.34	19.03	0.3313	0.01739
					3250	10.7	18.86	19.84	0.3330	0.01739
4 DR	1.0	Man	FWD	P 185 60R 15	2750	8.8	19.27	13.03	0.3156	0.01498
					2875	8.9	19.92	13.69	0.3177	0.01497
					3000	9.0	20.55	14.34	0.3199	0.01497
					3125	9.1	21.16	15.01	0.3221	0.01497
					3250	9.2	21.77	15.67	0.3242	0.01497
				P 195 50R 16	2750	9.3	18.31	16.79	0.3109	0.01494
					2875	9.4	18.90	17.60	0.3126	0.01494
					3000	9.5	19.48	18.41	0.3143	0.01493
					3125	9.6	20.04	19.22	0.3161	0.01493
					3250	9.8	20.58	20.04	0.3178	0.01493
5 DR	1.0	Man	FWD	P 185 60R 15	2750	9.2	18.51	12.95	0.3218	0.01598
					2875	9.3	19.14	13.60	0.3240	0.01598
					3000	9.4	19.75	14.26	0.3261	0.01598
					3125	9.5	20.35	14.93	0.3283	0.01598
					3250	9.6	20.94	15.59	0.3305	0.01598
				P 195 50R 16	2750	9.7	17.63	16.71	0.3171	0.01594
					2875	9.8	18.20	17.52	0.3188	0.01594
					3000	9.9	18.76	18.33	0.3206	0.01594
					3125	10.0	19.31	19.14	0.3223	0.01594
					3250	10.1	19.84	19.96	0.3240	0.01593

ROADLOAD CERTIFICATION SPECIFICATIONS ***2014 B299 Manual ST***

Vehicle Description							Track Coefficients			
								3 Term coefs		
Body	Eng	Trans	Drive	Tire	ETW	HP@50	55-45 CDT	f0	f1	f2
5DR	1.6	B6	FWD	P 205 40R 17	2750	10.9	15.58	23.57	0.3086	0.01716
					2875	11.1	16.05	24.73	0.3093	0.01716
					3000	11.2	16.51	25.89	0.3100	0.01716
					3125	11.4	16.95	27.06	0.3108	0.01716
					3250	11.6	17.38	28.23	0.3115	0.01716

ROADLOAD CERTIFICATION SPECIFICATIONS *2014 Focus*

Vehicle Description								Track Coefficients		
Body	Eng	Trans	Drive	Tire	ETW	HP@50	55-45 CDT	f0	f1	f2
AGS 4DR	All	Dps6	FWD	195 65R 15	2875	10.0	17.87	18.00	0.3542	0.01558
					3000	10.1	18.44	18.77	0.3552	0.01558
					3250	10.3	19.55	20.30	0.3573	0.01558
					3375	10.4	20.09	21.06	0.3584	0.01558
					3500	10.5	20.62	21.83	0.3594	0.01558
				215 55R 16	2875	10.0	17.76	18.55	0.3357	0.01591
					3000	10.1	18.34	19.29	0.3361	0.01593
					3250	10.3	19.46	20.76	0.3370	0.01595
					3375	10.4	20.01	21.49	0.3374	0.01596
					3500	10.5	20.54	22.22	0.3378	0.01597
				215 50R 17	2875	10.1	17.57	18.89	0.3444	0.01592
					3000	10.2	18.13	19.69	0.3453	0.01593
					3250	10.5	19.20	21.29	0.3473	0.01595
					3375	10.6	19.71	22.10	0.3482	0.01596
					3500	10.7	20.22	22.90	0.3492	0.01597
				235 40R 18	2875	10.2	17.40	20.43	0.3432	0.01563
					3000	10.4	17.92	21.38	0.3441	0.01563
					3250	10.6	18.92	23.30	0.3460	0.01563
					3375	10.8	19.40	24.27	0.3470	0.01562
					3500	10.9	19.87	25.23	0.3480	0.01562
AGS 5DR	All	Dps6	FWD	195 65R 15	2875	10.3	17.20	17.91	0.3608	0.01666
					3000	10.5	17.75	18.68	0.3619	0.01666
					3250	10.7	18.84	20.21	0.3640	0.01666
					3375	10.8	19.36	20.98	0.3650	0.01666
					3500	10.9	19.88	21.74	0.3661	0.01666
				215 55R 16	2875	10.4	17.09	18.46	0.3424	0.01699
					3000	10.5	17.66	19.20	0.3428	0.01700
					3250	10.7	18.76	20.67	0.3437	0.01702
					3375	10.8	19.29	21.40	0.3441	0.01703
					3500	10.9	19.81	22.13	0.3445	0.01704
				215 50R 17	2875	10.5	16.92	18.80	0.3510	0.01700
					3000	10.6	17.46	19.60	0.3520	0.01701
					3250	10.9	18.51	21.21	0.3539	0.01703
					3375	11.0	19.01	22.01	0.3549	0.01704
					3500	11.1	19.51	22.81	0.3559	0.01705
				235 40R 18	2875	10.6	16.76	20.34	0.3498	0.01671
					3000	10.7	17.27	21.30	0.3508	0.01671
					3250	11.0	18.25	23.21	0.3527	0.01670
					3375	11.1	18.72	24.18	0.3537	0.01670
					3500	11.3	19.18	25.15	0.3546	0.01670
SFE AGS	All	Auto	FWD	215 55R 16 LR	2875	9.3	19.07	14.09	0.3389	0.01558
					3000	9.4	19.72	14.66	0.3396	0.01559
					3250	9.6	20.99	15.81	0.3410	0.01561
					3375	9.7	21.59	16.39	0.3417	0.01563
					3500	9.8	22.20	16.96	0.3424	0.01564

ED_002078G_00001322-00645

ROADLOAD CERTIFICATION SPECIFICATIONS *2014 Focus*

AGS 4DR	All	Man	FWD	195 65R 15	2875	10.1	17.60	20.41	0.3137	0.01588
					3000	10.2	18.16	21.18	0.3148	0.01588
					3250	10.4	19.26	22.71	0.3169	0.01588
					3375	10.5	19.79	23.48	0.3179	0.01588
					3500	10.7	20.31	24.25	0.3190	0.01588
				215 55R 16	2875	10.2	17.49	20.94	0.2962	0.01621
					3000	10.3	18.06	21.68	0.2967	0.01622
					3250	10.5	19.17	23.14	0.2975	0.01624
					3375	10.6	19.72	23.87	0.2980	0.01625
					3500	10.7	20.25	24.60	0.2984	0.01626
				215 50R 17	2875	10.3	17.31	21.26	0.3053	0.01621
					3000	10.4	17.86	22.06	0.3063	0.01622
					3250	10.6	18.92	23.67	0.3082	0.01624
					3375	10.7	19.43	24.47	0.3092	0.01625
					3500	10.9	19.93	25.27	0.3102	0.01626
				235 40R 18	2875	10.4	17.14	22.80	0.3040	0.01592
					3000	10.5	17.66	23.76	0.3049	0.01592
					3250	10.8	18.65	25.68	0.3068	0.01592
					3375	10.9	19.13	26.64	0.3078	0.01591
					3500	11.0	19.59	27.61	0.3088	0.01591
AGS 5DR	All	Man	FWD	195 65R 15	2875	10.5	16.94	20.33	0.3204	0.01696
					3000	10.6	17.49	21.10	0.3215	0.01696
					3250	10.8	18.57	22.63	0.3236	0.01696
					3375	10.9	19.09	23.39	0.3246	0.01696
					3500	11.0	19.60	24.16	0.3257	0.01696
				215 55R 16	2875	10.6	16.85	20.85	0.3029	0.01728
					3000	10.7	17.40	21.59	0.3033	0.01729
					3250	10.9	18.48	23.06	0.3042	0.01732
					3375	11.0	19.01	23.79	0.3046	0.01733
					3500	11.1	19.53	24.52	0.3051	0.01734
				215 50R 17	2875	10.7	16.68	21.17	0.3120	0.01728
					3000	10.8	17.21	21.98	0.3130	0.01729
					3250	11.0	18.25	23.58	0.3149	0.01732
					3375	11.1	18.75	24.38	0.3159	0.01733
					3500	11.2	19.24	25.18	0.3168	0.01734
				235 40R 18	2875	10.8	16.52	22.72	0.3106	0.01700
					3000	10.9	17.02	23.67	0.3116	0.01700
					3250	11.2	18.00	25.59	0.3135	0.01699
					3375	11.3	18.46	26.56	0.3145	0.01699
					3500	11.4	18.92	27.52	0.3154	0.01699
ST AGS 5DR	All	Man	FWD	235 40R 18	2875	11.2	15.83	24.09	0.3190	0.01769
					3000	11.4	16.32	25.04	0.3201	0.01769
					3250	11.6	17.27	26.93	0.3222	0.01769
					3375	11.8	17.73	27.88	0.3233	0.01769
					3500	11.9	18.19	28.82	0.3244	0.01768

ROADLOAD CERTIFICATION SPECIFICATIONS *2014 Focus BEV*

Vehicle Description								Track Coefficients 3 Term coefs		
Body	Eng	Trans	Drive	Tire	ETW	HP@50	55-45 CDT	f0	f1	f2
BEV	NA	BEV	FWD	P 225 50R 17	3875	11.8	20.26	23.05	0.3647	0.01897
					4000	11.9	20.71	23.78	0.3686	0.01896
					4250	12.2	21.55	25.25	0.3765	0.01896

ROADLOAD CERTIFICATION SPECIFICATIONS *2014 CD4 FWD*

Vehicle Description					Single Roll Settings				
					3-Term		3 Term coefs		
Body	Trans	Drive	Tire	ETW	HP@50	55-45 CDT	f0	f1	f2
CD391 AGS 1.6	B6	FWD	P 215 60R 16 GY	3625	9.8	22.86	20.95	0.2529	0.01598
				3750	9.9	23.41	21.64	0.2545	0.01598
				3875	10.0	23.94	22.33	0.2560	0.01598
				4000	10.1	24.47	23.01	0.2575	0.01598
			P 235 50R 17 Mi	3625	9.4	23.76	19.17	0.2341	0.01597
				3750	9.5	24.32	19.86	0.2351	0.01597
				3875	9.6	24.87	20.56	0.2361	0.01597
				4000	9.7	25.41	21.26	0.2371	0.01596
			P 235 45R 18 GY	3625	10.0	22.32	22.96	0.2412	0.01612
				3750	10.2	22.82	23.79	0.2425	0.01613
				3875	10.3	23.30	24.62	0.2438	0.01613
				4000	10.4	23.77	25.45	0.2451	0.01613
			P 235 40R 19 Co	3625	10.1	22.14	23.61	0.2363	0.01620
				3750	10.2	22.65	24.39	0.2373	0.01621
				3875	10.3	23.15	25.17	0.2383	0.01621
				4000	10.5	23.64	25.95	0.2393	0.01622
CD391 AGS 1.5	6F35	FWD	P 215 60R 16 GY	3625	10.8	20.81	20.44	0.5432	0.01328
				3750	10.9	21.32	21.13	0.5447	0.01327
				3875	11.0	21.83	21.81	0.5463	0.01327
				4000	11.1	22.33	22.50	0.5478	0.01327
			P 235 50R 17 Mi	3625	10.4	21.55	18.65	0.5223	0.01330
				3750	10.5	22.09	19.35	0.5233	0.01329
				3875	10.6	22.61	20.04	0.5243	0.01329
				4000	10.7	23.12	20.74	0.5253	0.01329
			P 235 45R 18 GY	3625	11.0	20.37	22.44	0.5279	0.01347
				3750	11.1	20.85	23.27	0.5291	0.01347
				3875	11.2	21.31	24.10	0.5304	0.01347
				4000	11.4	21.76	24.94	0.5317	0.01348
			P 235 40R 19 Co	3625	11.1	20.23	23.10	0.5214	0.01357
				3750	11.2	20.71	23.88	0.5224	0.01358
				3875	11.3	21.19	24.65	0.5234	0.01358
				4000	11.4	21.66	25.43	0.5244	0.01358
			P 235 45R 18 S/M	3625	11.4	19.65	25.82	0.5295	0.01328
				3750	11.5	20.13	26.63	0.5307	0.01328
				3875	11.6	20.59	27.43	0.5318	0.01328
				4000	11.7	21.05	28.23	0.5329	0.01327
	6F35 New Case	FWD	P 215 60R 16 GY	3625	10.4	21.61	20.93	0.3284	0.01619
				3750	10.5	22.13	21.62	0.3300	0.01619
				3875	10.6	22.66	22.30	0.3315	0.01618
				4000	10.7	23.17	22.99	0.3330	0.01618
			P 235 50R 17 Mi	3625	10.0	22.42	19.14	0.3090	0.01618
				3750	10.1	22.97	19.84	0.3100	0.01617
				3875	10.2	23.50	20.53	0.3110	0.01617
				4000	10.3	24.02	21.23	0.3120	0.01617
			P 235 45R 18 GY	3625	10.6	21.14	22.93	0.3157	0.01633
				3750	10.7	21.62	23.76	0.3170	0.01633
				3875	10.8	22.10	24.59	0.3183	0.01633
				4000	11.0	22.56	25.43	0.3196	0.01633
			P 235 40R 19 Conti	3625	10.7	20.99	23.59	0.3104	0.01640
				3750	10.8	21.48	24.37	0.3114	0.01641
				3875	10.9	21.97	25.14	0.3124	0.01641
				4000	11.0	22.44	25.92	0.3134	0.01642
			P 235 45R 18 S/M	3625	11.0	20.37	26.31	0.3174	0.01614
				3750	11.1	20.85	27.11	0.3185	0.01614
				3875	11.2	21.33	27.92	0.3197	0.01613
				4000	11.3	21.80	28.71	0.3208	0.01613
CD391 AGS 1.5 S/S	6F35	FWD	P 235 50R 17 Mi	3625	9.8	22.87	18.22	0.3065	0.01600
			36 psi	3750	9.9	23.44	18.88	0.3075	0.01599
				3875	10.0	23.99	19.54	0.3084	0.01599
				4000	10.1	24.53	20.20	0.3094	0.01599
			P 225 50R 17 Mi	3625	9.7	23.10	16.62	0.3177	0.01614
			HEV tire	3750	9.8	23.68	17.20	0.3188	0.01614
			36 psi	3875	9.9	24.25	17.79	0.3200	0.01615
				4000	10.0	24.81	18.38	0.3211	0.01615

ED_002078G_00001322-00648

ROADLOAD CERTIFICATION SPECIFICATIONS

2014 CD4 FWD

Vehicle Description					Single Roll Settings				
					3-Term		3 Term coefs		
Body	Trans	Drive	Tire	ETW	HP@50	55-45 CDT	f0	f1	f2
CD391 AGS 2.0 / 2.5	6F35	FWD	P 215 60R 16 GY	3625	10.9	20.51	20.40	0.5459	0.01371
				3750	11.0	21.02	21.09	0.5474	0.01371
				3875	11.1	21.52	21.78	0.5490	0.01371
				4000	11.2	22.01	22.47	0.5505	0.01370
			P 235 50R 17 Mi	3625	10.5	21.31	18.37	0.5246	0.01373
			2.5 only	3750	10.6	21.84	19.05	0.5256	0.01373
			33psi	3875	10.7	22.36	19.74	0.5266	0.01372
				4000	10.8	22.87	20.43	0.5276	0.01372
			P 235 45R 18 GY	3625	11.2	20.09	22.41	0.5305	0.01390
				3750	11.3	20.56	23.24	0.5318	0.01390
				3875	11.4	21.02	24.07	0.5331	0.01391
				4000	11.5	21.46	24.90	0.5344	0.01391
			P 235 40R 19 Co	3625	11.2	19.95	23.06	0.5241	0.01400
				3750	11.3	20.43	23.84	0.5251	0.01401
				3875	11.5	20.90	24.62	0.5261	0.01401
				4000	11.6	21.36	25.40	0.5271	0.01402
CD391 1.6 NO AGS	B6	FWD	P 215 60R 16 GY	3625	10.6	21.21	20.78	0.2660	0.01809
				3750	10.7	21.74	21.47	0.2675	0.01809
				3875	10.8	22.25	22.16	0.2690	0.01808
				4000	10.9	22.75	22.85	0.2706	0.01808
			P 235 50R 17 Mi	3625	10.2	21.98	19.00	0.2471	0.01808
				3750	10.3	22.52	19.69	0.2481	0.01807
				3875	10.4	23.05	20.39	0.2491	0.01807
				4000	10.5	23.57	21.09	0.2501	0.01807
			P 235 45R 18 GY	3625	10.8	20.75	22.79	0.2543	0.01823
				3750	10.9	21.22	23.62	0.2555	0.01823
				3875	11.0	21.69	24.45	0.2568	0.01823
				4000	11.2	22.15	25.28	0.2581	0.01824
			P 235 40R 19 Co	3625	10.9	20.59	23.44	0.2493	0.01831
				3750	11.0	21.08	24.22	0.2504	0.01831
				3875	11.1	21.56	25.00	0.2514	0.01832
				4000	11.2	22.03	25.78	0.2524	0.01832
			P 235 45R 18 S/D	3625	11.2	20.00	26.17	0.2559	0.01804
				3750	11.3	20.48	26.97	0.2571	0.01804
				3875	11.4	20.95	27.77	0.2582	0.01804
				4000	11.5	21.41	28.57	0.2593	0.01803

ROADLOAD CERTIFICATION SPECIFICATIONS

2014 CD4 FWD

Vehicle Description						Single Roll Settings				
						3-Term		3 Term coefs		
Body	Trans	Drive	Tire	ETW	HP@50	55-45 CDT	f0	f1	f2
CD391 1.5 NO AGS	6F35	FWD	P 215 60R 16 GY	3625	11.5	19.43	20.27	0.5562	0.01538
				3750	11.6	19.93	20.96	0.5578	0.01538
				3875	11.7	20.41	21.65	0.5593	0.01538
				4000	11.8	20.89	22.33	0.5608	0.01538
			P 235 50R 17 Mi	3625	11.2	20.08	18.48	0.5354	0.01540
				3750	11.3	20.59	19.18	0.5364	0.01540
				3875	11.4	21.09	19.87	0.5374	0.01540
				4000	11.5	21.58	20.57	0.5384	0.01539
			P 235 45R 18 GY	3625	11.8	19.05	22.27	0.5409	0.01557
				3750	11.9	19.51	23.10	0.5422	0.01558
				3875	12.0	19.95	23.93	0.5435	0.01558
				4000	12.1	20.39	24.77	0.5448	0.01558
			P 235 40R 19 Co	3625	11.8	18.92	22.93	0.5344	0.01568
				3750	12.0	19.39	23.71	0.5354	0.01568
				3875	12.1	19.85	24.48	0.5364	0.01569
				4000	12.2	20.30	25.26	0.5375	0.01569
			P 235 45R 18 S/D	3625	12.2	18.42	25.65	0.5426	0.01539
				3750	12.3	18.88	26.46	0.5437	0.01539
				3875	12.4	19.33	27.26	0.5448	0.01538
				4000	12.5	19.77	28.06	0.5459	0.01538
CD391 1.5 NO AGS	6F35 New Case	FWD	P 215 60R 16 GY	3625	11.1	20.13	20.76	0.3415	0.01830
				3750	11.2	20.64	21.45	0.3430	0.01829
				3875	11.3	21.13	22.13	0.3446	0.01829
				4000	11.4	21.62	22.82	0.3461	0.01829
			P 235 50R 17 Mi	3625	10.8	20.83	18.97	0.3221	0.01828
				3750	10.9	21.35	19.67	0.3231	0.01828
				3875	11.0	21.86	20.36	0.3241	0.01828
				4000	11.1	22.37	21.06	0.3251	0.01827
			P 235 45R 18 GY	3625	11.4	19.72	22.76	0.3288	0.01843
				3750	11.5	20.19	23.59	0.3301	0.01843
				3875	11.6	20.64	24.42	0.3313	0.01844
				4000	11.7	21.09	25.26	0.3326	0.01844
			P 235 40R 19 Conti	3625	11.4	19.59	23.42	0.3234	0.01851
				3750	11.6	20.07	24.20	0.3245	0.01851
				3875	11.7	20.53	24.97	0.3255	0.01852
				4000	11.8	20.99	25.75	0.3265	0.01852
			P 235 45R 18 S/M	3625	11.8	19.04	26.14	0.3305	0.01825
				3750	11.9	19.51	26.95	0.3316	0.01824
				3875	12.0	19.97	27.75	0.3327	0.01824
				4000	12.1	20.42	28.55	0.3338	0.01824

ROADLOAD CERTIFICATION SPECIFICATIONS

2014 CD4 FWD

Vehicle Description						Single Roll Settings				
						3-Term		3 Term coefs		
Body	Trans	Drive	Tire	ETW	HP@50	55-45 CDT	f0	f1	f2
CD391 2.0 NO AGS	6F35	FWD	P 215 60R 16 GY	3625	11.7	19.21	20.24	0.5585	0.01575
				3750	11.8	19.70	20.93	0.5601	0.01575
				3875	11.9	20.18	21.62	0.5616	0.01575
				4000	12.0	20.65	22.30	0.5632	0.01575
			P 235 50R 17 Mi	3625	11.3	19.84	18.45	0.5377	0.01577
				3750	11.4	20.35	19.15	0.5387	0.01577
				3875	11.5	20.85	19.84	0.5397	0.01577
				4000	11.6	21.33	20.54	0.5407	0.01576
			P 235 45R 18 GY	3625	11.9	18.84	22.24	0.5432	0.01595
				3750	12.0	19.29	23.07	0.5445	0.01595
				3875	12.1	19.73	23.90	0.5458	0.01595
				4000	12.3	20.17	24.74	0.5471	0.01595
			P 235 40R 19 Co	3625	12.0	18.71	22.90	0.5367	0.01605
				3750	12.1	19.18	23.68	0.5377	0.01605
				4000	12.3	20.08	25.23	0.5398	0.01606
			P 235 45R 18 S/D	3625	12.3	18.22	25.62	0.5449	0.01576
				3750	12.4	18.67	26.43	0.5460	0.01576
				3875	12.5	19.12	27.23	0.5471	0.01575
				4000	12.6	19.56	28.03	0.5482	0.01575

ED_002078G_00001322-00651

ROADLOAD CERTIFICATION SPECIFICATIONS

2014 CD4 FWD

Vehicle Description						Single Roll Settings				
						3-Term		3 Term coefs		
Body	Trans	Drive	Tire	ETW	HP@50	55-45 CDT	f0	f1	f2
CD391 2.5 NO AGS	6F35	FWD	P 215 60R 16 GY	3625	11.4	19.70	20.31	0.5536	0.01495
				3750	11.5	20.20	20.99	0.5551	0.01495
				3875	11.6	20.69	21.68	0.5566	0.01495
				4000	11.7	21.17	22.37	0.5582	0.01494
			P 235 50R 17 Mi	3625	11.0	20.37	18.52	0.5327	0.01497
				3750	11.1	20.88	19.21	0.5337	0.01496
				3875	11.2	21.39	19.91	0.5347	0.01496
				4000	11.3	21.88	20.61	0.5357	0.01496
			P 235 45R 18 GY	3625	11.6	19.31	22.31	0.5382	0.01514
				3750	11.7	19.77	23.14	0.5395	0.01514
				3875	11.8	20.22	23.97	0.5408	0.01515
				4000	12.0	20.66	24.80	0.5421	0.01515
			P 235 45R 18 S/M	3625	12.0	18.66	25.69	0.5399	0.01496
				3750	12.1	19.12	26.49	0.5410	0.01495
				3875	12.2	19.57	27.29	0.5421	0.01495
				4000	12.3	20.02	28.09	0.5433	0.01495

ED_002078G_00001322-00652

ROADLOAD CERTIFICATION SPECIFICATIONS *2014 CD4 FWD*

Vehicle Description					Single Roll Settings				
					3-Term		3 Term coefs		
Body	Trans	Drive	Tire	ETW	HP@50	55-45 CDT	f0	f1	f2
CD533_2.0 NO AGS	6F35	FWD	P 245 45R 18 A/S	3875	11.7	20.40	26.35	0.4935	0.01481
				4000	11.9	20.83	27.29	0.4936	0.01481
				4250	12.1	21.66	29.18	0.4938	0.01482
				4500	12.4	22.46	31.08	0.4939	0.01484
			P 245 40R 19 A/S	3875	11.5	20.85	24.49	0.4936	0.01480
				4000	11.6	21.31	25.35	0.4937	0.01480
				4250	11.8	22.19	27.06	0.4939	0.01481
				4500	12.1	23.04	28.78	0.4941	0.01482
			P 245 40R 18 S/D	3875	12.2	19.56	28.55	0.5336	0.01464
				4000	12.4	19.98	29.44	0.5350	0.01464
				4250	12.6	20.79	31.24	0.5377	0.01464
				4500	12.9	21.58	33.03	0.5404	0.01464
			P 245 40R 19 S/D	3875	11.8	20.36	27.19	0.4733	0.01495
				4000	11.9	20.79	28.14	0.4727	0.01496
				4250	12.1	21.63	30.05	0.4714	0.01498
				4500	12.4	22.43	31.96	0.4701	0.01500
			P 245 40ZR 19 PIRELLI	3875	12.0	19.89	27.76	0.5193	0.01464
				4000	12.2	20.32	28.65	0.5202	0.01463
				4250	12.4	21.16	30.42	0.5221	0.01463
				4500	12.7	21.96	32.18	0.5240	0.01463
CD533_3.7 AGS	6F50	FWD	P 245 45R 18 A/S	3875	11.4	20.94	31.65	0.2415	0.01681
				4000	11.6	21.38	32.59	0.2416	0.01682
				4250	11.8	22.22	34.48	0.2417	0.01683
				4500	12.1	23.02	36.39	0.2419	0.01684
			P 245 40R 19 A/S	3875	11.2	21.41	29.79	0.2422	0.01679
				4000	11.3	21.88	30.65	0.2423	0.01680
				4250	11.5	22.77	32.36	0.2425	0.01681
				4500	11.8	23.63	34.08	0.2427	0.01682
			P 245 40R 18 S/D	3875	11.9	20.05	33.85	0.2816	0.01665
				4000	12.1	20.48	34.75	0.2830	0.01665
				4250	12.3	21.30	36.54	0.2857	0.01665
				4500	12.6	22.09	38.33	0.2884	0.01664
			P 245 40R 19 S/D	3875	11.5	20.89	32.49	0.2219	0.01695
				4000	11.6	21.33	33.44	0.2213	0.01696
				4250	11.8	22.18	35.35	0.2200	0.01698
				4500	12.1	22.99	37.26	0.2187	0.01700

ED_002078G_00001322-00653

ROADLOAD CERTIFICATION SPECIFICATIONS

2014 CD4 AWD

Vehicle Description							Single Roll Settings				
							3-Term		3 Term coefs		
Body	Eng	Trans	Drive	Tire	ETW	HP@50	55-45 CDT	f0	f1	f2
CD391 AGS	2.0 GTDI	6F35	AWD	P 215 60R 16 GY	3625	11.9	18.77	22.27	0.5911	0.01510
					3750	12.0	19.25	22.97	0.5927	0.01510
					3875	12.1	19.72	23.66	0.5943	0.01510
					4000	12.3	20.19	24.36	0.5959	0.01509
				P 235 50R 17 Mi	3625	11.6	19.39	20.46	0.5696	0.01510
					3750	11.7	19.89	21.16	0.5707	0.01510
					3875	11.8	20.38	21.87	0.5717	0.01510
					4000	11.9	20.86	22.57	0.5728	0.01510
				P 235 45R 18 GY	3625	12.2	18.43	24.29	0.5751	0.01527
					3750	12.3	18.87	25.13	0.5764	0.01527
					3875	12.4	19.31	25.97	0.5778	0.01527
					4000	12.5	19.74	26.81	0.5791	0.01528
				P 235 40R 19 Conti	3625	12.2	18.32	24.95	0.5683	0.01536
					3750	12.3	18.77	25.73	0.5694	0.01537
					3875	12.5	19.22	26.52	0.5704	0.01537
					4000	12.6	19.66	27.31	0.5714	0.01538
CD391 NO AGS	2.0 GTDI	6F35	AWD	P 215 60R 16 GY	3625	12.7	17.66	22.11	0.6038	0.01716
					3750	12.8	18.13	22.80	0.6054	0.01716
					3875	12.9	18.58	23.50	0.6070	0.01716
					4000	13.0	19.03	24.19	0.6085	0.01715
				P 235 50R 17 Mi	3625	12.3	18.22	20.30	0.5823	0.01717
					3750	12.4	18.69	21.00	0.5833	0.01716
					3875	12.5	19.16	21.70	0.5844	0.01716
					4000	12.6	19.62	22.41	0.5854	0.01716
				P 235 45R 18 GY	3625	12.9	17.36	24.12	0.5878	0.01733
					3750	13.0	17.79	24.96	0.5891	0.01733
					3875	13.2	18.21	25.80	0.5904	0.01734
					4000	13.3	18.63	26.65	0.5917	0.01734
				P 235 40R 19 Conti	3625	13.0	17.26	24.78	0.5810	0.01742
					3750	13.1	17.70	25.57	0.5820	0.01743
					3875	13.2	18.14	26.36	0.5831	0.01743
					4000	13.3	18.56	27.14	0.5841	0.01744
				P 235 45R 18 S/M	3625	13.3	16.83	27.54	0.5896	0.01714
					3750	13.4	17.26	28.35	0.5907	0.01714
					3875	13.5	17.68	29.16	0.5919	0.01714
					4000	13.7	18.10	29.97	0.5931	0.01713
CD533 AGS	3.7	6F50	AWD	P 245 45R 18 A/S Mi	3875	12.9	18.50	27.65	0.7692	0.01238
					4000	13.1	18.91	28.60	0.7693	0.01239
					4250	13.3	19.70	30.52	0.7695	0.01240
					4500	13.6	20.45	32.44	0.7697	0.01241
				P 245 40R 19 A/S Mi	3875	12.7	18.79	26.04	0.7741	0.01234
					4000	12.9	19.21	26.91	0.7745	0.01234
					4250	13.1	20.04	28.68	0.7752	0.01235
					4500	13.4	20.83	30.45	0.7758	0.01235
				P 245 40R 18 S/D	3875	13.6	17.62	30.05	0.8552	0.01164
					4000	13.7	18.02	30.96	0.8564	0.01164
					4250	14.0	18.78	32.79	0.8590	0.01164
					4500	14.2	19.52	34.61	0.8615	0.01164
				P 245 40R 19 S/D	3875	13.5	17.72	31.13	0.7918	0.01225
					4000	13.6	18.12	32.05	0.7926	0.01225
					4250	13.9	18.89	33.89	0.7943	0.01225
					4500	14.2	19.64	35.72	0.7960	0.01225
				P 245 40ZR 19 PIRELLI	3875	13.2	18.08	29.08	0.7946	0.01221
					4000	13.4	18.48	29.98	0.7956	0.01221
					4250	13.6	19.28	31.76	0.7975	0.01221
					4500	13.9	20.04	33.55	0.7995	0.01221
CD533 NO AGS	2.0L	6f35	AWD	P 245 45R 18 A/S Mi	3875	12.6	18.97	28.18	0.5220	0.01616
					4000	12.8	19.39	29.14	0.5221	0.01616
					4250	13.0	20.18	31.05	0.5223	0.01618
					4500	13.3	20.95	32.97	0.5225	0.01619
				P 245 40R 19 A/S Mi	3875	12.4	19.28	26.57	0.5276	0.01611
					4000	12.5	19.71	27.45	0.5280	0.01611
					4250	12.8	20.54	29.21	0.5286	0.01611
					4500	13.0	21.34	30.99	0.5293	0.01612
				P 245 40R 18 S/D	3875	13.3	18.05	30.57	0.5896	0.01578
					4000	13.4	18.45	31.49	0.5909	0.01578
					4250	13.7	19.23	33.31	0.5935	0.01578
					4500	13.9	19.98	35.13	0.5960	0.01578
				P 245 40R 19 S/D	3875	13.2	18.15	31.66	0.5453	0.01602
					4000	13.3	18.55	32.58	0.5461	0.01602
					4250	13.6	19.34	34.42	0.5478	0.01602
					4500	13.8	20.09	36.26	0.5495	0.01602
				P 245 40ZR 19 PIRELLI	3875	12.9	18.53	29.61	0.5481	0.01598
					4000	13.1	18.94	30.51	0.5491	0.01598
					4250	13.3	19.74	32.30	0.5510	0.01597
					4500	13.6	20.51	34.08	0.5530	0.01597

ROADLOAD CERTIFICATION SPECIFICATIONS *2014 HEV CD4X*

Vehicle Description						Single Roll Settings				
						3-Term		3 Term coefs		
Body	Eng	Trans	Drive	Tire	ETW	HP@50	55-45 CDT	f0	f1	f2
CD391 P-HEV	2.0	HF35 2.91	FWD	P 225 50R 17	4000	10.4	23.89	22.71	0.3646	0.01468
					4250	10.5	24.95	23.9	0.367	0.01469
					4500	10.7	25.98	25.1	0.3693	0.01470
				P 235 45R 18 AS	4000	11.2	21.99	29.48	0.3599	0.01473
					4250	11.5	22.88	31.15	0.3624	0.01473
					4500	11.7	23.71	32.83	0.365	0.01474
CD391 F-HEV	2.0	HF35 2.57	FWD	P 225 50R 17	4000	10.1	24.50	22.68	0.3402	0.01441
					4250	10.3	25.57	23.88	0.3426	0.01442
					4500	10.4	26.62	25.08	0.3449	0.01442
				P 235 45R 18 AS	4000	11.0	22.49	29.46	0.3364	0.01446
					4250	11.2	23.38	31.13	0.3389	0.01447
					4500	11.5	24.22	32.81	0.3415	0.01448
C344 P-HEV	2.0	HF35 2.91	FWD	P 225 50R 17	4000	11.7	21.09	21.78	0.3885	0.01873
					4250	11.9	22.08	22.93	0.3908	0.01874
					4500	12.1	23.04	24.09	0.3931	0.01874
C344 F-HEV	2.0	HF35 2.57	FWD	P 225 50R 17	4000	11.5	21.46	21.75	0.365	0.01859
					4250	11.7	22.48	22.9	0.3672	0.01859
					4500	11.9	23.45	24.05	0.3695	0.01860
CD533 F-HEV	2.0	HF35 2.57	FWD	P 245 45R 18 AS	4000	11.4	21.70	31.78	0.3011	0.01543
					4250	11.6	22.55	33.67	0.3013	0.01544
					4500	11.9	23.36	35.57	0.3014	0.01545
				P 245 40R 19 AS	4000	11.1	22.22	29.84	0.3017	0.01541
					4250	11.4	23.12	31.55	0.3019	0.01542
					4500	11.6	23.98	33.26	0.3021	0.01543
				P 245 45R 18 SD	4000	11.9	20.81	33.96	0.3384	0.01527
					4250	12.1	21.64	35.76	0.3409	0.01527
					4500	12.4	22.44	37.56	0.3434	0.01527
				P 245 40R 19 SD	4000	12.0	20.67	35.2	0.3253	0.01528
					4250	12.2	21.50	37.02	0.3269	0.01528
					4500	12.5	22.30	38.84	0.3285	0.01528
	2.0	HF35 2.91	FWD	P 245 45R 18 AS	4000	11.6	21.26	31.8	0.324	0.01568
					4250	11.9	22.10	33.69	0.3242	0.01569
					4500	12.1	22.90	35.59	0.3243	0.01570
				P 245 40R 19 AS	4000	11.4	21.75	29.86	0.3245	0.01566
					4250	11.6	22.64	31.57	0.3247	0.01567
					4500	11.8	23.50	33.29	0.3249	0.01568

ED_002078G_00001322-00655

ROADLOAD CERTIFICATION SPECIFICATIONS *2014 D258*

Vehicle Description								Track Coefficients		
Body	Eng	Trans	Drive	Tire	ETW	HP@50	55-45 CDT	f0	f1	f2
Base D258	All	6F	FWD	P 235 60R 17	4000	12.1	20.45	17.31	0.4692	0.02001
					4250	12.4	21.25	18.96	0.4742	0.02006
					4500	12.6	22.02	20.60	0.4791	0.02011
					4750	12.9	22.75	22.25	0.4841	0.02016
					5000	13.2	23.46	23.89	0.4890	0.02021
				P 235 55R 18	4000	12.4	19.94	20.75	0.4848	0.01923
					4250	12.7	20.67	22.75	0.4913	0.01923
					4500	13.0	21.36	24.77	0.4979	0.01922
					4750	13.3	22.01	26.80	0.5045	0.01922
					5000	13.6	22.63	28.84	0.5112	0.01921
				255 45R 19	4000	12.6	19.70	22.11	0.4674	0.01948
					4250	12.9	20.42	24.16	0.4724	0.01950
					4500	13.2	21.11	26.23	0.4773	0.01951
					4750	13.5	21.76	28.30	0.4823	0.01953
					5000	13.8	22.38	30.38	0.4873	0.01954
				245 45R 20 Mi	4000	12.4	19.92	21.98	0.4420	0.01964
					4250	12.7	20.65	23.99	0.4462	0.01966
					4500	13.0	21.36	26.00	0.4503	0.01967
					4750	13.3	22.03	28.02	0.4545	0.01969
					5000	13.6	22.68	30.04	0.4587	0.01970
				245 45R 20 Gdy	4000	13.8	17.93	26.94	0.5663	0.01927
					4250	14.2	18.54	29.22	0.5786	0.01926
					4500	14.6	19.11	31.51	0.5909	0.01925
					4750	14.9	19.65	33.80	0.6032	0.01924
					5000	15.3	20.16	36.09	0.6155	0.01923

ED_002078G_00001322-00656

ROADLOAD CERTIFICATION SPECIFICATIONS

2014 D258

Vehicle Description								Track Coefficients		
Body	Eng	Trans	Drive	Tire	ETW	HP@50	55-45 CDT	f0	f1	f2
Base D258	All	6F	AWD	P 235 60R 17	4000	13.2	18.76	21.25	0.6133	0.01879
					4250	13.4	19.54	22.90	0.6182	0.01884
					4500	13.7	20.28	24.54	0.6232	0.01888
					4750	14.0	20.99	26.19	0.6281	0.01893
					5000	14.2	21.68	27.83	0.6331	0.01898
				P 235 55R 18	4000	13.5	18.35	24.69	0.6274	0.01802
					4250	13.8	19.06	26.69	0.6340	0.01801
					4500	14.1	19.73	28.71	0.6405	0.01801
					4750	14.4	20.36	30.74	0.6472	0.01801
					5000	14.7	20.98	32.77	0.6538	0.01800
				255 45R 19	4000	13.6	18.13	26.05	0.6127	0.01824
					4250	13.9	18.84	28.10	0.6177	0.01825
					4500	14.3	19.50	30.17	0.6227	0.01827
					4750	14.6	20.14	32.24	0.6277	0.01828
					5000	14.9	20.74	34.32	0.6327	0.01830
				245 45R 20 Mi	4000	13.5	18.36	25.89	0.5753	0.01854
					4250	13.8	19.08	27.90	0.5794	0.01856
					4500	14.1	19.77	29.91	0.5836	0.01857
					4750	14.4	20.43	31.93	0.5878	0.01859
					5000	14.7	21.05	33.96	0.5920	0.01861
				245 45R 20 Gdy	4000	14.8	16.67	30.85	0.6995	0.01817
					4250	15.2	17.26	33.14	0.7118	0.01816
					4500	15.6	17.82	35.42	0.7241	0.01815
					4750	16.0	18.36	37.71	0.7365	0.01814
					5000	16.4	18.87	40.00	0.7488	0.01813
D258 GTDI AWD SHO	All	6F	AWD	P 235 60R 17	4000	13.5	18.31	28.68	0.3087	0.02289
					4250	13.8	19.07	30.32	0.3137	0.02294
					4500	14.0	19.81	31.96	0.3186	0.02299
					4750	14.3	20.51	33.61	0.3236	0.02304
					5000	14.6	21.19	35.26	0.3286	0.02309
				P 235 55R 18 Mi	4000	13.8	17.91	32.09	0.3245	0.02210
					4250	14.1	18.61	34.10	0.3311	0.02209
					4500	14.4	19.28	36.11	0.3377	0.02209
					4750	14.7	19.91	38.14	0.3443	0.02209
					5000	15.0	20.52	40.18	0.3509	0.02208
				255 45R 19	4000	14.0	17.70	33.49	0.3068	0.02237
					4250	14.3	18.39	35.55	0.3117	0.02239
					4500	14.6	19.06	37.61	0.3167	0.02240
					4750	14.9	19.69	39.68	0.3217	0.02242
					5000	15.2	20.29	41.76	0.3267	0.02244
				245 45R 20 Mi	4000	13.7	18.02	32.92	0.2906	0.02219
					4250	14.0	18.77	34.77	0.2950	0.02219
					4500	14.3	19.48	36.62	0.2993	0.02219
					4750	14.5	20.18	38.46	0.3037	0.02219
					5000	14.8	20.84	40.31	0.3080	0.02219
				245 45R 20 Gdy	4000	15.2	16.31	38.13	0.4072	0.02286
					4250	15.5	16.90	40.41	0.4195	0.02285
					4500	15.9	17.46	42.70	0.4318	0.02284
					4750	16.3	18.00	44.99	0.4441	0.02283
					5000	16.7	18.51	47.28	0.4564	0.02282

ROADLOAD CERTIFICATION SPECIFICATIONS *2014 D258*

Vehicle Description								Track Coefficients		
Body	Eng	Trans	Drive	Tire	ETW	HP@50	55-45 CDT	f0	f1	f2
D258 Non SSV	2.0L GTDI	6F	FWD	P 235 60R 17	4000	12.1	20.52	21.04	0.4022	0.01973
					4250	12.3	21.32	22.68	0.4071	0.01978
					4500	12.6	22.09	24.33	0.4121	0.01983
					4750	12.9	22.83	25.97	0.4170	0.01987
					5000	13.1	23.54	27.62	0.4220	0.01992
				P 235 55R 18	4000	12.2	20.33	23.25	0.4138	0.01894
					4250	12.5	21.08	25.17	0.4201	0.01894
					4500	12.8	21.79	27.10	0.4264	0.01894
					4750	13.1	22.47	29.04	0.4327	0.01893
					5000	13.4	23.12	30.99	0.4391	0.01893
				255 45R 19	4000	12.5	19.77	25.83	0.4003	0.01919
					4250	12.8	20.49	27.89	0.4053	0.01921
					4500	13.1	21.17	29.95	0.4103	0.01923
					4750	13.4	21.83	32.02	0.4153	0.01924
					5000	13.8	22.44	34.10	0.4203	0.01926
				245 45R 20 Mi	4000	12.4	19.98	25.71	0.3754	0.01935
					4250	12.7	20.72	27.72	0.3796	0.01936
					4500	13.0	21.42	29.74	0.3838	0.01938
					4750	13.3	22.10	31.75	0.3879	0.01940
					5000	13.6	22.74	33.78	0.3921	0.01941
				245 45R 20 Gdy	4000	13.7	17.98	30.67	0.4997	0.01898
					4250	14.1	18.59	32.96	0.5120	0.01897
					4500	14.5	19.16	35.24	0.5243	0.01896
					4750	14.9	19.70	37.53	0.5366	0.01895
					5000	15.3	20.21	39.82	0.5489	0.01894

ROADLOAD CERTIFICATION SPECIFICATIONS *2014 D258 SSV*

Vehicle Description								Track Coefficients		
Body	Eng	Trans	Drive	Tire	ETW	HP@50	55-45 CDT	f0	f1	f2
D258 SSV	2.0L GTDI	6F	FWD	P 235 60R 17	4000	12.4	19.97	21.04	0.4022	0.02072
					4250	12.7	20.77	22.68	0.4071	0.02077
					4500	12.9	21.53	24.33	0.4121	0.02082
					4750	13.2	22.26	25.97	0.4170	0.02087
					5000	13.5	22.96	27.62	0.4220	0.02092
				P 235 55R 18	4000	12.5	19.79	23.25	0.4138	0.01994
					4250	12.8	20.53	25.17	0.4201	0.01994
					4500	13.1	21.24	27.10	0.4264	0.01993
					4750	13.4	21.92	29.04	0.4327	0.01993
					5000	13.7	22.56	30.99	0.4391	0.01992
				255 45R 19	4000	12.8	19.26	25.83	0.4003	0.02019
					4250	13.2	19.98	27.89	0.4053	0.02020
					4500	13.5	20.66	29.95	0.4103	0.02022
					4750	13.8	21.30	32.02	0.4153	0.02024
					5000	14.1	21.92	34.10	0.4203	0.02025
				245 45R 20 Mi	4000	12.7	19.46	25.71	0.3754	0.02034
					4250	13.0	20.19	27.72	0.3796	0.02036
					4500	13.3	20.90	29.74	0.3838	0.02037
					4750	13.6	21.56	31.75	0.3879	0.02039
					5000	13.9	22.20	33.78	0.3921	0.02041
				245 45R 20 Gdy	4000	14.1	17.56	30.67	0.4997	0.01997
					4250	14.5	18.16	32.96	0.5120	0.01996
					4500	14.8	18.73	35.24	0.5243	0.01995
					4750	15.2	19.27	37.53	0.5366	0.01994
					5000	15.6	19.79	39.82	0.5489	0.01993

ROADLOAD CERTIFICATION SPECIFICATIONS *2014 D258 Police*

Vehicle Description								Track Coefficients		
Body	Eng	Trans	Drive	Tire	ETW	HP@50	55-45 CDT	f0	f1	f2
D258	All	6F	FWD	245 55R 18	4000	14.1	17.55	29.30	0.4050	0.02247
	Except 2.0L				4250	14.5	18.14	31.79	0.4127	0.02248
	GTDI				4500	14.9	18.71	34.28	0.4203	0.02249
					4750	15.3	19.24	36.77	0.4280	0.02250
					5000	15.6	19.75	39.27	0.4357	0.02251

ROADLOAD CERTIFICATION SPECIFICATIONS *2014 D258 Police*

Vehicle Description								Track Coefficients		
Body	Eng	Trans	Drive	Tire	ETW	HP@50	55-45 CDT	f0	f1	f2
D258 AWD	**All**	**6F**	**AWD**	**245 55R 18**	**4000**	**15.6**	**15.88**	31.30	0.6998	0.02018
					4250	**16.0**	**16.47**	33.78	0.7074	0.02019
					4500	**16.3**	**17.02**	36.27	0.7151	0.02020
					4750	**16.7**	**17.55**	38.77	0.7228	0.02021
					5000	**17.1**	**18.05**	41.26	0.7304	0.02022
D258 GTDI	**All**	**6F**	**AWD**	**245 55R 18**	**4000**	**15.7**	**15.70**	38.59	0.4060	0.02369
					4250	**16.1**	**16.28**	41.08	0.4137	0.02370
					4500	**16.5**	**16.83**	43.57	0.4213	0.02371
					4750	**16.9**	**17.36**	46.06	0.4290	0.02372
					5000	**17.3**	**17.86**	48.55	0.4366	0.02373

ROADLOAD CERTIFICATION SPECIFICATIONS *2014 MKS*

Vehicle Description								Track Coefficients		
Body	Eng	Trans	Drive	Tire	ETW	HP@50	55-45 CDT	f0	f1	f2
MKS	3.7L	Auto	FWD	255 45R 19	4000	12.4	19.94	21.43	0.4417	0.01984
					4250	12.7	20.70	23.27	0.4473	0.01986
					4500	13.0	21.42	25.13	0.4530	0.01987
					4750	13.3	22.11	27.00	0.4587	0.01989
				245 45R 20	4000	12.8	19.34	25.48	0.4122	0.01994
					4250	13.1	20.07	27.49	0.4164	0.01996
					4500	13.4	20.78	29.50	0.4206	0.01997
					4750	13.7	21.44	31.52	0.4248	0.01999

ED_002078G_00001322-00662

ROADLOAD CERTIFICATION SPECIFICATIONS *2014 MKS*

Vehicle Description								Track Coefficients 3 Term		
Body	Eng	Trans	Drive	Tire	ETW	HP@50	55-45 CDT	f0	f1	f2
MKS AWD	3.7L	Auto	AWD	255 45R 19	4500	13.7	20.34	24.42	0.7026	0.01721
					4750	14.0	21.02	26.29	0.7083	0.01723
					5000	14.3	21.66	28.17	0.7140	0.01725
				245 45R 20	4500	14.0	19.81	28.81	0.6528	0.01755
					4750	14.3	20.46	30.83	0.6570	0.01757
					5000	14.6	21.09	32.85	0.6612	0.01758
MKS	3.5L_GTDI	Auto	AWD	255 45R 19	4500	14.1	19.68	29.30	0.4534	0.02163
					4750	14.4	20.35	31.17	0.4591	0.02165
					5000	14.7	20.99	33.05	0.4648	0.02167
				245 45R 20	4500	14.5	19.18	33.58	0.4147	0.02178
					4750	14.8	19.83	35.60	0.4189	0.02180
					5000	15.1	20.45	37.62	0.4231	0.02182

ED_002078G_00001322-00663

ROADLOAD CERTIFICATION SPECIFICATIONS

2014 Mustang

Vehicle Description						Single Roll Settings				
						3-Term		3 Term coefs		
Body	Eng	Trans	Drive	Tire	ETW	HP@50	55-45 CDT	f0	f1	f2
V6 Coupe	3.7	Manual	RWD	P 215 65R 17 Mi	3750	10.7	21.72	15.51	0.3930	0.01800
					3875	10.8	22.16	16.38	0.3951	0.01801
					4000	11.0	22.60	17.24	0.3972	0.01802
					4250	11.2	23.44	18.97	0.4015	0.01804
				P 225 60R 17 BF	3750	11.9	19.44	23.72	0.4117	0.01807
					3875	12.1	19.79	24.88	0.4143	0.01808
					4000	12.3	20.13	26.04	0.4169	0.01810
					4250	12.6	20.79	28.36	0.4221	0.01813
				P 235 50R 18 Pi	3750	12.3	18.80	28.46	0.3851	0.01790
					3875	12.5	19.12	29.86	0.3866	0.01791
					4000	12.7	19.42	31.26	0.3881	0.01793
					4250	13.1	20.00	34.06	0.3911	0.01795
				P 255 40ZR 19 Pi	3750	12.7	18.18	31.46	0.4388	0.01687
				3.31 axle only	3875	12.9	18.51	32.81	0.4418	0.01685
					4000	13.1	18.82	34.15	0.4447	0.01683
					4250	13.5	19.43	36.84	0.4507	0.01679
V6 Coupe	3.7	Automatic	RWD	P 215 65R 17 Mi	3750	10.8	21.57	20.49	0.1739	0.02061
					3875	10.9	22.01	21.35	0.1760	0.02062
					4000	11.0	22.44	22.21	0.1781	0.02064
					4250	11.3	23.28	23.94	0.1824	0.02066
				P 225 60R 17 BF	3750	12.0	19.31	28.76	0.1867	0.02079
					3875	12.2	19.66	29.92	0.1893	0.02081
					4000	12.4	20.00	31.08	0.1919	0.02082
					4250	12.7	20.65	33.40	0.1970	0.02086
				P 235 50R 18 Pi	3750	12.4	18.67	33.58	0.1538	0.02074
					3875	12.6	18.98	34.97	0.1553	0.02075
					4000	12.8	19.29	36.37	0.1567	0.02076
					4250	13.2	19.87	39.17	0.1597	0.02079
				P 255 40ZR 19 P	3750	12.8	18.06	36.61	0.2036	0.01978
				3.31 axle only	3875	13.0	18.38	37.96	0.2066	0.01975
					4000	13.2	18.70	39.30	0.2096	0.01973
					4250	13.6	19.30	41.99	0.2156	0.01969
V6 convt.	3.7	Manual	RWD	P 215 65R 17 Mi	3750	11.0	21.03	15.51	0.3930	0.01906
					3875	11.2	21.46	16.38	0.3951	0.01907
					4000	11.3	21.90	17.24	0.3972	0.01908
					4250	11.6	22.72	18.97	0.4015	0.01911
				P 225 60R 17 BF	3750	12.3	18.88	23.72	0.4117	0.01913
					3875	12.5	19.23	24.88	0.4143	0.01915
					4000	12.6	19.57	26.04	0.4169	0.01916
					4250	13.0	20.22	28.36	0.4221	0.01920
				P 235 50R 18 Pi	3750	12.7	18.28	28.46	0.3851	0.01896
					3875	12.9	18.59	29.86	0.3866	0.01897
					4000	13.1	18.89	31.26	0.3881	0.01899
					4250	13.5	19.47	34.06	0.3911	0.01902
V6 convt.	3.7	Automatic	RWD	P 215 65R 17 Mi	3750	11.1	20.88	20.49	0.1739	0.02167
					3875	11.2	21.32	21.35	0.1760	0.02169
					4000	11.4	21.75	22.21	0.1781	0.02170
					4250	11.6	22.58	23.94	0.1824	0.02172
				P 225 60R 17 BF	3750	12.4	18.76	28.76	0.1867	0.02185
					3875	12.5	19.11	29.92	0.1893	0.02187
					4000	12.7	19.44	31.08	0.1919	0.02189
					4250	13.1	20.10	33.40	0.1970	0.02192
				P 235 50R 18 Pi	3750	12.8	18.15	33.58	0.1538	0.02180
					3875	13.0	18.47	34.97	0.1553	0.02181
					4000	13.2	18.77	36.37	0.1567	0.02182
					4250	13.6	19.35	39.17	0.1597	0.02185

ROADLOAD CERTIFICATION SPECIFICATIONS

2014 Mustang

Vehicle Description						Single Roll Settings 3-Term		3 Term coefs		
Body	Eng	Trans	Drive	Tire	ETW	HP@50	55-45 CDT	f0	f1	f2
V8 Coupe	5.0	Manual	RWD	P 235 50R 18 Pi	3750	12.6	18.36	27.60	0.4239	0.01837
					3875	12.8	18.67	28.99	0.4254	0.01839
					4000	13.0	18.97	30.39	0.4269	0.01840
					4250	13.4	19.55	33.19	0.4299	0.01843
				P 245 45R 19 Pi	3750	13.1	17.75	31.54	0.3856	0.01884
					3875	13.3	18.04	33.08	0.3860	0.01887
					4000	13.5	18.32	34.63	0.3864	0.01889
					4250	13.9	18.85	37.74	0.3872	0.01895
				P 255 40ZR 19 Pi	3750	13.0	17.77	30.59	0.4782	0.01733
				Track pack option	3875	13.2	18.09	31.93	0.4812	0.01731
					4000	13.4	18.40	33.28	0.4842	0.01729
					4250	13.8	19.01	35.97	0.4902	0.01725
V8 Coupe	5.0	Automatic	RWD	P 235 50R 18 Pi	3750	12.8	18.18	33.80	0.1497	0.02174
					3875	13.0	18.49	35.20	0.1512	0.02175
					4000	13.2	18.79	36.59	0.1527	0.02177
					4250	13.6	19.37	39.40	0.1557	0.02180
				P 245 45R 19 Pi	3750	13.2	17.60	37.65	0.1199	0.02205
					3875	13.4	17.88	39.19	0.1203	0.02208
					4000	13.6	18.16	40.74	0.1207	0.02211
					4250	14.0	18.70	43.84	0.1214	0.02216
				P 255 40R 19 Go	3750	12.6	18.37	30.28	0.2260	0.02123
				Shelby Brake option	3875	12.8	18.73	31.40	0.2298	0.02122
					4000	13.0	19.07	32.53	0.2337	0.02122
					4250	13.3	19.73	34.77	0.2414	0.02120
V8 Convt.	5.0	Manual	RWD	P 235 50R 18 Pi	3750	13.0	17.80	27.60	0.4239	0.01955
					3875	13.2	18.11	28.99	0.4254	0.01957
					4000	13.4	18.42	30.39	0.4269	0.01958
					4250	13.8	18.99	33.19	0.4299	0.01961
				P 245 45R 19 Pi	3750	13.4	17.23	31.54	0.3856	0.02002
					3875	13.7	17.52	33.08	0.3860	0.02005
					4000	13.9	17.80	34.63	0.3864	0.02007
					4250	14.3	18.33	37.74	0.3872	0.02013
				P 255 40R 19 Go	3750	12.9	17.99	24.03	0.5047	0.01896
				Shelby Brake option	3875	13.1	18.35	25.15	0.5085	0.01895
					4000	13.2	18.68	26.28	0.5124	0.01895
					4250	13.6	19.35	28.52	0.5201	0.01893
V8 Convt.	5.0	Automatic	RWD	P 235 50R 18 Pi	3750	13.1	17.64	33.80	0.1497	0.02292
					3875	13.3	17.95	35.20	0.1512	0.02293
					4000	13.5	18.25	36.59	0.1527	0.02295
					4250	13.9	18.83	39.40	0.1557	0.02297
				P 245 45R 19 Pi	3750	13.6	17.09	37.65	0.1199	0.02323
					3875	13.8	17.38	39.19	0.1203	0.02326
					4000	14.0	17.65	40.74	0.1207	0.02329
					4250	14.4	18.19	43.84	0.1214	0.02334
				P 255 40R 19 Go	3750	13.0	17.82	30.28	0.2260	0.02241
				Shelby Brake option	3875	13.2	18.17	31.40	0.2298	0.02240
					4000	13.4	18.51	32.53	0.2337	0.02240
					4250	13.7	19.17	34.77	0.2414	0.02238
Cal.-Special Coupe	5.0	Manual	RWD	P 245 45R 19 Pi	3750	13.5	17.16	31.54	0.3856	0.02019
					3875	13.7	17.45	33.08	0.3860	0.02022
					4000	13.9	17.73	34.63	0.3864	0.02025
					4250	14.4	18.26	37.74	0.3872	0.02031
Cal.-Special Coupe	5.0	Automatic	RWD	P 245 45R 19 Pi	3750	13.6	17.01	37.65	0.1199	0.02341
					3875	13.8	17.31	39.19	0.1203	0.02343
					4000	14.1	17.58	40.74	0.1207	0.02346
					4250	14.5	18.11	43.84	0.1214	0.02352
Cal.-Special Convt.	5.0	Manual	RWD	P 245 45R 19 Pi	3750	13.9	16.68	31.54	0.3856	0.02137
					3875	14.1	16.97	33.08	0.3860	0.02140
					4000	14.3	17.24	34.63	0.3864	0.02143
					4250	14.8	17.78	37.74	0.3872	0.02148
Cal.-Special Convt.	5.0	Automatic	RWD	P 245 45R 19 Pi	3750	14.0	16.54	37.65	0.1199	0.02459
					3875	14.2	16.83	39.19	0.1203	0.02461
					4000	14.4	17.11	40.74	0.1207	0.02464
					4250	14.9	17.64	43.84	0.1214	0.02470

ROADLOAD CERTIFICATION SPECIFICATIONS *2014 Shelby GT500*

Vehicle Description						Single Roll Settings				
						3-Term		3 Term coefs		
Body	Eng	Trans	Drive	Tire	ETW	HP@50	55-45 CDT	f0	f1	f2
Base / Optional Coupe	5.8SC	T6060	RWD	P 265 40ZR 19 FR	4000	15.0	16.44	34.80	0.4441	0.0223
				P 285 35ZR 20 RR	4250	15.4	17.01	37.46	0.4532	0.0223
					4500	15.9	17.54	40.12	0.4624	0.0223
Cooling pkg Coupe	5.8SC	T6060	RWD	P 265 40ZR 19 FR	4000	15.1	16.36	34.80	0.4441	0.0225
				P 285 35ZR 20 RR	4250	15.5	16.92	37.46	0.4532	0.0225
					4500	15.9	17.46	40.12	0.4624	0.0225
Base / Optional Convertible	5.8SC	T6060	RWD	P 265 40ZR 19 FR	4000	15.2	16.28	34.80	0.4441	0.0228
				P 285 35ZR 20 RR	4250	15.6	16.84	37.46	0.4532	0.0227
					4500	16.0	17.37	40.12	0.4624	0.0227

Index for Single Roll Settings 2014 Model Year Truck

Carline	Program Code
Econoline	VN127
Econoline Incomplete	VN127 Incomplete
Edge FWD AWD	U38X FWD AWD
Edge Sport FWD AWD	U38X FWD AWD
MKX FWD AWD	U38X FWD AWD
Escape FWD / AWD	C520 FWD / AWD
Expedition 4x4 4x2	U222 4x4 4x2
Explorer 2.0L GTDI FWD	U502 2.0L GTDI FWD
Explorer 3.5L FWD / AWD	U502 3.5L FWD / AWD
Explorer Sport 3.5L GTDI AWD	U502 Sport 3.5L GTDI AWD
Police Interceptor Utility	U502 Police
F150 3.5L V6 GTDI	P415 3.5L V6 GTDI
F150 3.7L V6	P415 3.7L V6
F150 5.0L/6.2L V8	P415 5.0L/6.2L V8
F150 SVT Raptor	P415 SVT Raptor
F-250/350 4x2 4x4	P473 4x2 4x4
F-250/350/450 4x2 4x4 Incomplete	P473 4x2 4x4 Incomplete
Navigator 4x4 4x2	U228 4x2 4x4
Transit	V363N
Transit Connect	V408

ROADLOAD CERTIFICATION SPECIFICATIONS

2014 Econoline

Vehicle Description						Track Coefficients				
						3-Term		3 Term coefs		
Body	Eng	Trans	Drive	Tire	ETW	HP@50	55-45 CDT	f0	f1	f2
E150	All	All	RWD	LT 225 75R 16 AS	5250	22.1	14.67	39.16	0.8164	0.03441
					5500	22.5	15.14	40.79	0.8339	0.03441
					6000	23.1	16.04	44.04	0.8689	0.03441
					6500	23.8	16.89	47.29	0.9039	0.03441
					7000	24.5	17.69	50.54	0.9389	0.03441
					7500	25.1	18.45	53.78	0.9738	0.03441
				LT 245 75R 16 AS	5250	21.9	14.86	38.30	0.7502	0.03525
					5500	22.2	15.35	39.77	0.7661	0.03525
					6000	22.8	16.31	42.69	0.7975	0.03525
					6500	23.3	17.22	45.55	0.8283	0.03525
					7000	23.9	18.09	48.37	0.8587	0.03525
					7500	24.5	18.93	51.14	0.8885	0.03525
E250	All	All	RWD	LT 225 75R 16 AS	5250	22.9	14.19	39.16	0.8164	0.03667
					5500	23.2	14.65	40.79	0.8339	0.03667
					6000	23.9	15.53	44.04	0.8689	0.03667
					6500	24.6	16.37	47.29	0.9039	0.03667
					7000	25.2	17.16	50.54	0.9389	0.03667
					7500	25.9	17.91	53.78	0.9738	0.03667
				LT 245 75R 16 AS	5250	22.6	14.36	38.30	0.7502	0.03752
					5500	22.9	14.85	39.77	0.7661	0.03752
					6000	23.5	15.78	42.69	0.7975	0.03752
					6500	24.1	16.68	45.55	0.8283	0.03752
					7000	24.7	17.54	48.37	0.8587	0.03752
					7500	25.2	18.37	51.14	0.8885	0.03752
E350	5.4L	All	RWD	LT 225 75R 16 AS	5500	23.5	14.50	40.79	0.8339	0.03739
					6000	24.1	15.38	44.04	0.8689	0.03739
					6500	24.8	16.21	47.29	0.9039	0.03739
					7000	25.5	17.00	50.54	0.9389	0.03739
					7500	26.1	17.75	53.78	0.9738	0.03739
					8000	26.8	18.46	57.01	1.0086	0.03739
				LT 245 75R 16 AS	5500	23.2	14.69	39.77	0.7661	0.03824
					6000	23.8	15.62	42.69	0.7975	0.03824
					6500	24.3	16.52	45.55	0.8283	0.03824
					7000	24.9	17.37	48.37	0.8587	0.03824
					7500	25.5	18.19	51.14	0.8885	0.03824
					8000	26.0	18.99	53.86	0.9178	0.03824
E350	6.8L	All	RWD	LT 225 75R 16 AS	5500	23.8	14.27	44.08	0.8806	0.03626
					6000	24.5	15.14	47.33	0.9157	0.03626
					6500	25.2	15.97	50.58	0.9507	0.03626
					7000	25.8	16.75	53.82	0.9856	0.03626
					7500	26.5	17.50	57.06	1.0205	0.03626
					8000	27.2	18.20	60.30	1.0553	0.03626
				LT 245 75R 16 AS	5500	23.5	14.46	42.93	0.8093	0.03723
					6000	24.1	15.38	45.85	0.8407	0.03723
					6500	24.7	16.26	48.71	0.8715	0.03723
					7000	25.3	17.11	51.53	0.9019	0.03723
					7500	25.9	17.93	54.30	0.9317	0.03723
					8000	26.4	18.72	57.02	0.9610	0.03723

ROADLOAD CERTIFICATION SPECIFICATIONS

2014 Econoline Incomplete

Vehicle Description						Single Roll Settings				
						3-Term		f0	f1	f2
Body	Eng	Trans	Drive	Tire	ETW	HP@50	55-45 CDT	lbf	lbf/mph	lbf/mph^2
E450 C/A	All	All	RWD	All	7500	37.7	12.32	79.89	0.7912	0.06520
56.0 ft^2					8000	38.3	12.91	83.07	0.8254	0.06520
					8500	39.0	13.49	86.25	0.8596	0.06520
					9000	39.6	14.05	89.41	0.8937	0.06520
					9500	40.3	14.59	92.58	0.9278	0.06520
					10000	40.9	15.11	95.73	0.9618	0.06520
					10500	41.6	15.62	98.89	0.9957	0.06520
					11000	42.2	16.11	102.03	1.0296	0.06520
					11500	42.8	16.59	105.18	1.0635	0.06520
					12000	43.5	17.05	108.31	1.0972	0.06520
E450 w/box	All	All	RWD	All	7500	58.4	7.94	116.89	0.7912	0.11274
72.0 ft^2					8000	59.1	8.37	120.06	0.8254	0.11274
					8500	59.7	8.80	123.24	0.8596	0.11274
					9000	60.4	9.22	126.41	0.8937	0.11274
					9500	61.0	9.63	129.57	0.9278	0.11274
					10000	61.7	10.03	132.73	0.9618	0.11274
					10500	62.3	10.42	135.88	0.9957	0.11274
					11000	63.0	10.80	139.03	1.0296	0.11274
					11500	63.6	11.18	142.17	1.0635	0.11274
					12000	64.3	11.55	145.31	1.0972	0.11274
E350 Strip Chassis	All	All	RWD	All	7500	35.6	13.02	79.89	0.7912	0.05907
49.0 ft^2					8000	36.3	13.64	83.07	0.8254	0.05907
					8500	36.9	14.23	86.25	0.8596	0.05907
					9000	37.6	14.81	89.41	0.8937	0.05907
					9500	38.2	15.36	92.58	0.9278	0.05907
					10000	38.9	15.90	95.73	0.9618	0.05907
					10500	39.5	16.42	98.89	0.9957	0.05907
					11000	40.2	16.93	102.03	1.0296	0.05907
					11500	40.8	17.42	105.18	1.0635	0.05907
					12000	41.4	17.89	108.31	1.0972	0.05907
E350 C/A w/Box SRW	All	All	RWD	All	7000	46.0	9.43	75.07	0.6802	0.09442
60.0 ft^2					7500	46.6	9.97	77.78	0.7094	0.09442
					8000	47.1	10.51	80.49	0.7386	0.09442
					8500	47.7	11.04	83.15	0.7672	0.09442
					9000	48.2	11.55	85.76	0.7953	0.09442
					9500	48.7	12.06	88.33	0.8230	0.09442
					10000	49.3	12.56	90.85	0.8501	0.09442
					10500	49.8	13.06	93.32	0.8767	0.09442
					11000	50.3	13.54	95.74	0.9028	0.09442
					11500	50.7	14.02	98.11	0.9283	0.09442
					12000	51.2	14.50	100.44	0.9534	0.09442
E-350 C/A DRW	All	All	RWD	All	7500	39.9	11.65	73.55	1.1770	0.06673
50.0 ft^2					8000	40.6	12.18	78.48	1.1880	0.06673
					8500	41.3	12.73	82.66	1.1989	0.06673
					9000	42.1	13.17	87.12	1.2422	0.06673
					9500	43.2	13.66	92.33	1.2899	0.06673
					10000	44.0	14.25	96.87	1.3226	0.06673

ROADLOAD CERTIFICATION SPECIFICATIONS

2014 Edge/MKX

Vehicle Description						Track Coefficients				
						3-Term		f0	f1	f2
Body	Eng	Trans	Drive	Tire	ETW	HP@50	55-45 CDT	lbf	lbf/mph	lbf/mph^2
Edge	2.0L	Auto	FWD	P 235 65R 17	4250	14.3	18.43	30.09	0.3629	0.02348
					4500	14.6	19.07	32.23	0.3690	0.02351
					4750	14.9	19.67	34.37	0.3750	0.02354
				P 245 60R 18	4250	12.8	20.54	19.97	0.3483	0.02348
					4500	13.1	21.31	21.58	0.3541	0.02350
					4750	13.3	22.04	23.19	0.3600	0.02353
				P 245 50R 20	4250	14.9	17.69	35.22	0.3651	0.02317
					4500	15.2	18.29	37.57	0.3714	0.02317
					4750	15.6	18.86	39.92	0.3776	0.02317
Edge	3.5L/3.7L	Auto	FWD	P 235 65R 17	4250	15.3	17.19	34.76	0.2997	0.02597
					4500	15.6	17.81	36.90	0.3057	0.02600
					4750	16.0	18.40	39.05	0.3118	0.02602
				P 245 60R 18	4250	13.8	19.03	24.55	0.2874	0.02591
					4500	14.1	19.77	26.16	0.2932	0.02593
					4750	14.4	20.48	27.78	0.2990	0.02596
				P 245 50R 20	4250	15.9	16.56	39.79	0.3044	0.02559
					4500	16.2	17.14	42.15	0.3107	0.02559
					4750	16.6	17.70	44.49	0.3170	0.02560
Edge Sport	3.7L	Auto	FWD	P 265 40R 22	4250	16.3	16.14	39.12	0.2719	0.02776
					4500	16.7	16.70	41.67	0.2770	0.02776
					4750	17.0	17.24	44.22	0.2821	0.02776
MKX	3.7L	Auto	FWD	P 245 60R 18	4250	14.0	18.77	24.55	0.2874	0.02647
					4500	14.3	19.51	26.16	0.2932	0.02649
					4750	14.5	20.22	27.78	0.2990	0.02652
				P 245 50R 20	4250	16.1	16.37	39.79	0.3044	0.02615
					4500	16.4	16.95	42.15	0.3107	0.02615
					4750	16.8	17.51	44.49	0.3170	0.02616
				P 265 40R 22	4250	15.7	16.71	39.12	0.2719	0.02607
					4500	16.1	17.28	41.67	0.2770	0.02607
					4750	16.5	17.83	44.22	0.2821	0.02607
Edge	3.5L/3.7L	Auto	AWD	P 235 65R 17	4500	17.7	15.74	42.60	0.2995	0.03000
					4750	18.0	16.30	44.75	0.3055	0.03003
					5000	18.3	16.85	46.89	0.3116	0.03005
				P 245 60R 18	4500	16.1	17.31	31.84	0.2783	0.02996
					4750	16.4	17.97	33.46	0.2841	0.02999
					5000	16.6	18.62	35.08	0.2899	0.03001
				P 245 50R 20	4500	18.2	15.27	47.83	0.2947	0.02963
					4750	18.6	15.80	50.17	0.3010	0.02963
					5000	18.9	16.32	52.52	0.3073	0.02963
Edge Sport	3.7L	Auto	AWD	P 265 40R 22	4500	18.5	15.02	47.32	0.2507	0.03160
					4750	18.9	15.54	49.88	0.2558	0.03160
					5000	19.3	16.04	52.44	0.2609	0.03160
MKX	3.7L	Auto	AWD	P 245 60R 18	4500	16.2	17.19	31.84	0.2783	0.03030
					4750	16.5	17.85	33.46	0.2841	0.03033
					5000	16.7	18.49	35.08	0.2899	0.03035
				P 245 50R 20	4500	18.3	15.17	47.83	0.2947	0.02997
					4750	18.7	15.71	50.17	0.3010	0.02997
					5000	19.0	16.23	52.52	0.3073	0.02997
				P 265 40R 22	4500	18.0	15.49	47.32	0.2507	0.02991
					4750	18.3	16.02	49.88	0.2558	0.02991
					5000	18.7	16.52	52.44	0.2609	0.02991

ROADLOAD CERTIFICATION SPECIFICATIONS

2014 C520 TRLHP

Vehicle Description						Single Roll Settings				
						3-Term		3 Term coefs		
Body	Eng	Trans	Drive	Tire	ETW	HP@50	55-45 CDT	f0	f1	f2
C520 1.6	All	Auto	FWD	P235/55R17	3750	13.1	17.72	21.41	0.5334	0.02006
					3875	13.2	18.17	22.11	0.5339	0.02007
					4000	13.3	18.61	22.80	0.5344	0.02008
					4250	13.5	19.48	24.20	0.5353	0.02010
				P235/50R18	3750	13.2	17.52	21.76	0.5477	0.02007
					3875	13.3	17.96	22.47	0.5487	0.02008
					4000	13.5	18.40	23.17	0.5498	0.02009
					4250	13.7	19.25	24.58	0.5518	0.02011
				P235/45R19	3750	13.2	17.59	21.83	0.5340	0.02016
					3875	13.3	18.03	22.56	0.5347	0.02017
					4000	13.4	18.47	23.30	0.5353	0.02018
					4250	13.6	19.31	24.77	0.5366	0.02021
C520 1.6	All	Auto	AWD	P235/55R17	3750	13.7	17.00	23.60	0.4078	0.02336
					3875	13.8	17.44	24.31	0.4083	0.02337
					4000	13.9	17.87	25.02	0.4088	0.02338
					4250	14.1	18.71	26.45	0.4098	0.02340
				P235/50R18	3750	13.8	16.87	23.67	0.4228	0.02334
					3875	13.9	17.30	24.39	0.4238	0.02335
					4000	14.0	17.72	25.10	0.4249	0.02336
					4250	14.2	18.55	26.52	0.4270	0.02338
				P235/45R19	3750	13.7	16.95	23.74	0.4096	0.02340
					3875	13.8	17.37	24.48	0.4103	0.02342
					4000	13.9	17.79	25.22	0.4110	0.02343
					4250	14.1	18.61	26.71	0.4124	0.02345
C520 FWD 2.5	All	Auto	FWD	P235/55R17	3750	12.9	17.97	21.73	0.5298	0.01944
					3875	13.0	18.43	22.44	0.5303	0.01945
					4000	13.1	18.87	23.15	0.5307	0.01946
					4250	13.3	19.75	24.56	0.5317	0.01948
				P235/50R18	3750	13.0	17.83	21.81	0.5438	0.01945
					3875	13.1	18.27	22.52	0.5449	0.01946
					4000	13.2	18.71	23.22	0.5459	0.01947
					4250	13.4	19.57	24.63	0.5480	0.01949
				P235/45R19	3750	13.0	17.90	21.88	0.5301	0.01954
					3875	13.1	18.34	22.61	0.5308	0.01955
					4000	13.2	18.78	23.35	0.5315	0.01956
					4250	13.4	19.64	24.82	0.5328	0.01958
C520 2.0	All	Auto	FWD	P235/55R17	3750	13.4	17.37	21.63	0.5375	0.02069
					3875	13.5	17.81	22.34	0.5379	0.02070
					4000	13.6	18.24	23.05	0.5384	0.02071
					4250	13.8	19.10	24.46	0.5394	0.02073
				P235/50R18	3750	13.5	17.23	21.71	0.5515	0.02069
					3875	13.6	17.67	22.42	0.5526	0.02070
					4000	13.7	18.10	23.12	0.5536	0.02071
					4250	13.9	18.94	24.53	0.5557	0.02073
				P235/45R19	3750	13.4	17.30	21.78	0.5378	0.02078
					3875	13.5	17.73	22.51	0.5385	0.02079
					4000	13.6	18.16	23.25	0.5392	0.02080
					4250	13.8	18.99	24.72	0.5405	0.02083
C520 2.0	All	Auto	AWD	P235/55R17	3750	14.1	16.51	23.51	0.4147	0.02448
					3875	14.2	16.94	24.22	0.4152	0.02449
					4000	14.3	17.36	24.93	0.4157	0.02450
					4250	14.5	18.18	26.36	0.4168	0.02453
				P235/50R18	3750	14.2	16.39	23.58	0.4297	0.02447
					3875	14.3	16.81	24.30	0.4308	0.02448
					4000	14.4	17.22	25.01	0.4318	0.02449
					4250	14.6	18.03	26.43	0.4340	0.02451
				P235/45R19	3750	14.1	16.46	23.65	0.4165	0.02453
					3875	14.2	16.88	24.39	0.4172	0.02454
					4000	14.3	17.29	25.13	0.4179	0.02455
					4250	14.5	18.09	26.62	0.4193	0.02458

ED_002078G_00001322-00671

ROADLOAD CERTIFICATION SPECIFICATIONS

2014 Expedition

Vehicle Description						Track Coefficients				
						3-Term		f0	f1	f2
Body	Eng	Trans	Drive	Tire	ETW	HP@50	55-45 CDT	lbf	lbf/mph	lbf/mph^2
Expedition	5.4L	Auto	4x2	P 265 70R 17 AS	6000	20.2	18.40	40.86	0.4609	0.03496
					6500	20.7	19.41	44.09	0.4792	0.03491
					7000	21.2	20.37	47.32	0.4975	0.03486
				P 265 70R 17 AT	6000	20.2	18.40	40.86	0.4609	0.03496
					6500	20.7	19.41	44.09	0.4792	0.03491
					7000	21.2	20.37	47.32	0.4975	0.03486
				P 255 70R 18	6000	21.5	17.25	52.60	0.3696	0.03606
					6500	22.1	18.17	56.57	0.3799	0.03610
					7000	22.7	19.04	60.53	0.3901	0.03614
				P 275 65R 18	6000	19.9	18.61	41.49	0.3533	0.03618
					6500	20.5	19.59	45.09	0.3638	0.03624
					7000	21.1	20.53	48.72	0.3744	0.03629
				P 275 55R 20 BSW	6000	21.2	17.54	50.25	0.3719	0.03593
					6500	21.8	18.40	54.64	0.3838	0.03597
					7000	22.5	19.21	59.07	0.3958	0.03601
				P 275 55R 20 OWL	6000	20.9	17.79	50.13	0.3184	0.03615
					6500	21.5	18.72	54.28	0.3249	0.03620
					7000	22.1	19.59	58.44	0.3314	0.03626
Expedition Long	5.4L	Auto	4x2	P 265 70R 17 AS	6000	20.6	17.99	40.86	0.4609	0.03635
					6500	21.2	18.99	44.09	0.4792	0.03630
					7000	21.7	19.94	47.32	0.4975	0.03625
				P 265 70R 17 AT	6000	20.6	17.99	40.86	0.4609	0.03635
					6500	21.2	18.99	44.09	0.4792	0.03630
					7000	21.7	19.94	47.32	0.4975	0.03625
				P 255 70R 18	6000	22.0	16.89	52.60	0.3696	0.03746
					6500	22.6	17.80	56.57	0.3799	0.03750
					7000	23.2	18.66	60.53	0.3901	0.03753
				P 275 65R 18	6000	20.4	18.19	41.49	0.3533	0.03757
					6500	21.0	19.16	45.09	0.3638	0.03763
					7000	21.6	20.08	48.72	0.3744	0.03769
				P 275 55R 20 BSW	6000	21.6	17.16	50.25	0.3719	0.03733
					6500	22.3	18.02	54.64	0.3838	0.03736
					7000	23.0	18.83	59.07	0.3958	0.03740
				P 275 55R 20 OWL	6000	21.3	17.40	50.13	0.3184	0.03754
					6500	21.9	18.32	54.28	0.3249	0.03760
					7000	22.6	19.19	58.44	0.3314	0.03765
Expedition Limo	5.4L	Auto	4x2	P 255 70R 18	8500	24.9	21.12	71.45	0.4183	0.03764
					9000	25.5	21.84	75.31	0.4282	0.03768
					9500	26.0	22.53	79.16	0.4382	0.03772
				P 275 65R 18	8500	23.3	22.55	59.80	0.4067	0.03786
					9000	23.9	23.28	63.54	0.4177	0.03792
					9500	24.5	23.97	67.31	0.4287	0.03798
				XL 285 60R 18	8500	24.1	21.81	68.87	0.3923	0.03683
					9000	24.6	22.58	72.61	0.4002	0.03682
					9500	25.2	23.31	76.35	0.4082	0.03682
Expedition	5.4L	Auto	4x4	P 265 70R 17 AS	6000	22.3	16.61	48.21	0.8775	0.03013
					6500	22.9	17.58	51.43	0.8959	0.03008
					7000	23.4	18.49	54.66	0.9142	0.03004
				P 265 70R 17 AT	6000	22.3	16.61	48.21	0.8775	0.03013
					6500	22.9	17.58	51.43	0.8959	0.03008
					7000	23.4	18.49	54.66	0.9142	0.03004
				P 255 70R 18	6000	23.6	15.69	59.93	0.7830	0.03126
					6500	24.2	16.56	63.90	0.7932	0.03130
					7000	24.9	17.40	67.86	0.8035	0.03134
				P 275 65R 18	6000	22.1	16.80	48.82	0.7665	0.03138
					6500	22.6	17.74	52.42	0.7770	0.03144
					7000	23.2	18.63	56.05	0.7876	0.03150
				P 275 55R 20 BSW	6000	23.3	15.91	57.59	0.7863	0.03113
					6500	24.0	16.75	61.98	0.7982	0.03116
					7000	24.7	17.54	66.41	0.8102	0.03120
				P 275 55R 20 OWL	6000	23.0	16.12	57.46	0.7328	0.03134
					6500	23.6	17.01	61.61	0.7393	0.03140
					7000	24.2	17.85	65.78	0.7458	0.03145

ROADLOAD CERTIFICATION SPECIFICATIONS

2014 Expedition

Vehicle Description						Track Coefficients				
						3-Term		f0	f1	f2
Body	Eng	Trans	Drive	Tire	ETW	HP@50	55-45 CDT	lbf	lbf/mph	lbf/mph^2
Expedition Long	5.4L	Auto	4x4	P 265 70R 17 AS	6000	22.5	16.46	48.21	0.8775	0.03075
					6500	23.1	17.42	51.43	0.8959	0.03071
					7000	23.6	18.33	54.66	0.9142	0.03066
				P 265 70R 17 AT	6000	22.5	16.46	48.21	0.8775	0.03075
					6500	23.1	17.42	51.43	0.8959	0.03071
					7000	23.6	18.33	54.66	0.9142	0.03066
				P 255 70R 18	6000	23.8	15.55	59.93	0.7830	0.03189
					6500	24.5	16.42	63.90	0.7932	0.03193
					7000	25.1	17.25	67.86	0.8035	0.03197
				P 275 65R 18	6000	22.3	16.64	48.82	0.7665	0.03200
					6500	22.9	17.58	52.42	0.7770	0.03206
					7000	23.4	18.46	56.05	0.7876	0.03212
				P 275 55R 20 BSW	6000	23.5	15.77	57.59	0.7863	0.03175
					6500	24.2	16.61	61.98	0.7982	0.03179
					7000	24.9	17.39	66.41	0.8102	0.03182
				P 275 55R 20 OWL	6000	23.2	15.98	57.46	0.7328	0.03197
					6500	23.8	16.86	61.61	0.7393	0.03202
					7000	24.4	17.70	65.78	0.7458	0.03207

ROADLOAD CERTIFICATION SPECIFICATIONS *2014 U502*

Vehicle Description								Track Coefficients		
									3 - Term	
Body	Eng	Trans	Drive	Tire	ETW	HP@50	55-45 CDT	f0	f1	f2
U502 FWD	3.5L	Auto	FWD	P 245 65R 17	4500	15.3	18.16	31.72	0.3507	0.02627
					4750	15.6	18.78	33.70	0.3583	0.02628
					5000	16.0	19.37	35.70	0.3660	0.02629
					5250	16.3	19.94	37.69	0.3736	0.02629
					5500	16.6	20.48	39.69	0.3812	0.02630
				P 245 60R 18	4500	15.1	18.42	30.08	0.3279	0.02676
					4750	15.4	19.03	32.07	0.3345	0.02680
					5000	15.8	19.62	34.06	0.3411	0.02684
					5250	16.1	20.18	36.07	0.3478	0.02688
					5500	16.4	20.72	38.09	0.3545	0.02692
				P 255 50R 20	4500	15.4	18.11	31.98	0.3937	0.02543
					4750	15.7	18.73	33.94	0.4040	0.02538
					5000	16.0	19.33	35.89	0.4144	0.02533
					5250	16.3	19.90	37.84	0.4248	0.02529
					5500	16.6	20.45	39.80	0.4351	0.02524
U502 GTDI	2.0L	Auto	FWD	P 245 65R 17	4500	15.1	18.47	29.64	0.2894	0.02758
					4750	15.4	19.09	31.63	0.2970	0.02759
					5000	15.7	19.68	33.62	0.3047	0.02760
					5250	16.0	20.25	35.62	0.3123	0.02760
					5500	16.4	20.80	37.62	0.3199	0.02761
				P 245 60R 18	4500	14.1	19.70	23.45	0.2595	0.02787
					4750	14.4	20.40	25.08	0.2654	0.02790
					5000	14.7	21.08	26.72	0.2713	0.02792
					5250	14.9	21.74	28.37	0.2773	0.02795
					5500	15.2	22.37	30.02	0.2832	0.02797
				P 245 50R 20	4500	16.2	17.20	38.49	0.2836	0.02745
					4750	16.5	17.77	40.81	0.2904	0.02745
					5000	16.9	18.31	43.11	0.2971	0.02745
					5250	17.2	18.83	45.42	0.3038	0.02744
					5500	17.6	19.33	47.72	0.3105	0.02744
				P 255 50R 20	4500	15.1	18.41	29.97	0.3313	0.02674
					4750	15.4	19.04	31.93	0.3416	0.02669
					5000	15.7	19.64	33.88	0.3520	0.02665
					5250	16.1	20.21	35.84	0.3623	0.02660
					5500	16.4	20.77	37.79	0.3727	0.02655

ED_002078G_00001322-00674

ROADLOAD CERTIFICATION SPECIFICATIONS *2014 U502*

Vehicle Description								Track Coefficients 3 - Term		
Body	Eng	Trans	Drive	Tire	ETW	HP@50	55-45 CDT	f0	f1	f2
U502 AWD	3.5L	Auto	AWD	P 245 65R 17	4500	17.3	16.09	31.98	0.7882	0.02332
					4750	17.6	16.67	33.97	0.7958	0.02333
					5000	17.9	17.24	35.96	0.8035	0.02334
					5250	18.2	17.78	37.96	0.8111	0.02334
					5500	18.6	18.31	39.96	0.8187	0.02335
				P 245 60R 18	4500	17.1	16.29	30.35	0.7648	0.02382
					4750	17.4	16.87	32.33	0.7713	0.02386
					5000	17.7	17.43	34.33	0.7780	0.02390
					5250	18.1	17.97	36.34	0.7846	0.02394
					5500	18.4	18.49	38.35	0.7913	0.02398
				P 255 50R 20	4500	17.3	16.06	32.28	0.8218	0.02262
					4750	17.6	16.65	34.23	0.8321	0.02258
					5000	18.0	17.22	36.19	0.8425	0.02253
					5250	18.3	17.77	38.14	0.8529	0.02248
					5500	18.6	18.29	40.10	0.8632	0.02244

ED_002078G_00001322-00675

ROADLOAD CERTIFICATION SPECIFICATIONS *2014 U502*

Vehicle Description						3-Term		Track Coefficients 3 Term coefs		
Body	Eng	Trans	Drive	Tire	ETW	HP@50	55-45 CDT	f0	f1	f2
U502 AWD GTDI SPORT	3.5L	Auto	AWD	P 245 65R 17	4500	17.5	15.92	31.98	0.7879	0.02389
					4750	17.8	16.50	33.97	0.7955	0.02390
					5000	18.1	17.06	35.96	0.8031	0.02390
					5250	18.4	17.60	37.96	0.8108	0.02391
					5500	18.8	18.12	39.96	0.8184	0.02392
				P 245 60R 18	4500	17.3	16.11	30.34	0.7648	0.02438
					4750	17.6	16.70	32.33	0.7713	0.02442
					5000	17.9	17.25	34.33	0.7779	0.02446
					5250	18.2	17.79	36.33	0.7846	0.02450
					5500	18.6	18.31	38.35	0.7913	0.02454
				P 255 50R 20	4500	17.5	15.90	32.27	0.8261	0.02305
				(Non Sport Tire)	4750	17.8	16.49	34.22	0.8364	0.02300
					5000	18.1	17.05	36.18	0.8468	0.02296
					5250	18.4	17.60	38.13	0.8571	0.02291
					5500	18.7	18.13	40.09	0.8675	0.02286
				265 45ZR 20	4500	18.1	15.41	37.39	0.7740	0.02372
				(Summer Tire)	4750	18.4	15.97	39.58	0.7801	0.02372
					5000	18.7	16.51	41.77	0.7863	0.02371
					5250	19.0	17.03	43.96	0.7925	0.02371
					5500	19.4	17.53	46.15	0.7987	0.02371

ED_002078G_00001322-00676

ROADLOAD CERTIFICATION SPECIFICATIONS *2014 U502 Police*

Vehicle Description								Track Coefficients		
Body	Eng	Trans	Drive	Tire	ETW	HP@50	55-45 CDT	f0	f1	f2
U502	All Except GTDI	Auto	FWD	245 55R 18	4500	17.8	15.64	40.01	0.4566	0.02822
					4750	18.2	16.16	42.50	0.4643	0.02823
					5000	18.6	16.65	44.99	0.4719	0.02824
					5250	18.9	17.13	47.49	0.4796	0.02825
					5500	19.3	17.58	49.98	0.4873	0.02826
U502	All Except GTDI	Auto	AWD	245 55R 18	4500	19.2	14.48	46.49	0.6804	0.02539
					4750	19.6	14.98	48.98	0.6881	0.02540
					5000	20.0	15.47	51.48	0.6957	0.02541
					5250	20.4	15.93	53.97	0.7034	0.02542
					5500	20.7	16.37	56.47	0.7111	0.02543
U502	3.5L GTDI	Auto	AWD	245 55R 18	4500	19.3	14.37	47.40	0.5320	0.02844
					4750	19.7	14.87	49.89	0.5397	0.02845
					5000	20.1	15.35	52.38	0.5474	0.02846
					5250	20.5	15.82	54.88	0.5550	0.02847
					5500	20.9	16.26	57.37	0.5627	0.02848

ROADLOAD CERTIFICATION SPECIFICATIONS

2014 F150 GTDi

Vehicle Description						Track Coefficients				
						3-Term		f0	f1	f2
Body	Eng	Trans	Drive	Tire	ETW	HP@50	55-45 CDT	lbf	lbf/mph	lbf/mph^2
F150 RCL & Tremor	3.5L GTDI	Auto	4x2	P 235 75R 17	5000	19.1	16.23	30.03	0.2722	0.03977
					5250	19.3	16.84	31.41	0.2776	0.03980
					5500	19.5	17.43	32.79	0.2830	0.03983
					6000	20.0	18.58	35.54	0.2938	0.03989
					6500	20.5	19.67	38.30	0.3046	0.03995
				P 255 65R 17	5000	20.1	15.38	36.71	0.2885	0.03990
					5250	20.4	15.93	38.43	0.2944	0.03995
					5500	20.7	16.46	40.14	0.3002	0.03999
					6000	21.2	17.47	43.57	0.3118	0.04007
					6500	21.8	18.44	47.01	0.3235	0.04016
				LT 275 65R 18	5000	22.1	14.00	51.69	0.2526	0.04055
					5250	22.5	14.46	54.05	0.2572	0.04061
					5500	22.8	14.90	56.41	0.2619	0.04068
					6000	23.6	15.75	61.11	0.2710	0.04080
					6500	24.3	16.55	65.78	0.2802	0.04092
				LT 245 75R 17	5000	20.7	14.96	43.04	0.2506	0.03979
					5250	21.0	15.49	44.99	0.2549	0.03982
					5500	21.3	16.00	46.94	0.2592	0.03985
					6000	21.9	16.97	50.82	0.2677	0.03990
					6500	22.4	17.90	54.68	0.2763	0.03995
				P 265 60R 18	5000	19.6	15.82	33.39	0.2983	0.03937
					5250	19.8	16.39	35.05	0.3053	0.03938
					5500	20.1	16.93	36.71	0.3123	0.03939
					6000	20.7	17.98	40.04	0.3265	0.03941
					6500	21.2	18.96	43.41	0.3408	0.03944
				P 275 55R 20 OWL & Bridgestone BSW	5000	20.2	15.30	41.27	0.2186	0.03978
					5250	20.5	15.83	43.33	0.2218	0.03981
					5500	20.8	16.34	45.39	0.2250	0.03983
					6000	21.4	17.31	49.52	0.2314	0.03989
					6500	22.1	18.22	53.68	0.2379	0.03994
				P 275 55R 20 BSW	5000	20.5	15.09	41.62	0.2631	0.03961
					5250	20.8	15.58	43.81	0.2691	0.03962
					5500	21.2	16.06	46.01	0.2750	0.03964
					6000	21.9	16.97	50.44	0.2870	0.03968
					6500	22.6	17.82	54.91	0.2992	0.03972
				P 265 70R 17	5000	20.1	15.37	37.03	0.2760	0.04009
					5250	20.4	15.91	38.79	0.2820	0.04013
					5500	20.7	16.43	40.55	0.2880	0.04017
					6000	21.3	17.43	44.08	0.2999	0.04026
					6500	21.9	18.38	47.62	0.3119	0.04035
				P 275 45R 22	5000	21.8	14.16	48.48	0.3312	0.03950
					5250	22.2	14.65	50.50	0.3388	0.03951
					5500	22.5	15.13	52.51	0.3464	0.03952
					6000	23.1	16.04	56.50	0.3615	0.03954
					6500	23.8	16.91	60.44	0.3764	0.03956
				P 275 65R 18	5000	19.4	15.99	33.45	0.2461	0.03979
					5250	19.6	16.55	35.19	0.2512	0.03982
					5500	19.9	17.10	36.94	0.2563	0.03984
					6000	20.5	18.14	40.47	0.2667	0.03990
					6500	21.0	19.12	44.03	0.2771	0.03996
F150 All SC except 163" WB	3.5L GTDI	Auto	4x2	P 235 75R 17	5250	18.9	17.21	31.41	0.2776	0.03857
					5500	19.1	17.81	32.79	0.2830	0.03860
					6000	19.6	18.97	35.54	0.2938	0.03866
					6500	20.0	20.07	38.30	0.3046	0.03872
					7000	20.5	21.12	41.07	0.3154	0.03878
				P 255 65R 17	5250	20.0	16.25	38.43	0.2944	0.03872
					5500	20.3	16.79	40.14	0.3002	0.03876
					6000	20.8	17.81	43.57	0.3118	0.03885
					6500	21.4	18.79	47.01	0.3235	0.03893
					7000	22.0	19.71	50.45	0.3352	0.03902
				LT 275 65R 18	5250	22.1	14.72	54.05	0.2572	0.03939
					5500	22.4	15.17	56.41	0.2619	0.03945
					6000	23.1	16.02	61.11	0.2710	0.03957
					6500	23.9	16.83	65.78	0.2802	0.03969
					7000	24.6	17.59	70.44	0.2893	0.03981

ROADLOAD CERTIFICATION SPECIFICATIONS

2014 F150 GTDi

				LT 245 75R 17	5250	20.6	15.79	44.99	0.2549	0.03860
					5500	20.9	16.31	46.94	0.2592	0.03862
					6000	21.5	17.29	50.82	0.2677	0.03868
					6500	22.0	18.23	54.68	0.2763	0.03873
					7000	22.6	19.12	58.53	0.2848	0.03878
				P 265 60R 18	5250	19.4	16.73	35.05	0.3053	0.03815
					5500	19.7	17.28	36.71	0.3123	0.03816
					6000	20.2	18.34	40.04	0.3265	0.03819
					6500	20.8	19.34	43.41	0.3408	0.03821
					7000	21.4	20.28	46.79	0.3552	0.03824
				P 275 55R 20 OWL & Bridgestone BSW	5250	20.1	16.15	43.33	0.2218	0.03858
					5500	20.4	16.66	45.39	0.2250	0.03861
					6000	21.0	17.64	49.52	0.2314	0.03866
					6500	21.6	18.56	53.68	0.2379	0.03872
					7000	22.3	19.44	57.85	0.2444	0.03877
				P 275 55R 20 BSW	5250	20.4	15.89	43.81	0.2691	0.03840
					5500	20.8	16.38	46.01	0.2750	0.03842
					6000	21.5	17.29	50.44	0.2870	0.03845
					6500	22.1	18.15	54.91	0.2992	0.03849
					7000	22.8	18.94	59.42	0.3114	0.03853
				P 265 70R 17	5250	20.0	16.23	38.79	0.2820	0.03890
					5500	20.3	16.76	40.55	0.2880	0.03895
					6000	20.9	17.77	44.08	0.2999	0.03903
					6500	21.5	18.73	47.62	0.3119	0.03912
					7000	22.1	19.63	51.16	0.3239	0.03921
				P 275 45R 22	5250	21.8	14.92	50.50	0.3388	0.03828
					5500	22.1	15.41	52.51	0.3464	0.03829
					6000	22.7	16.33	56.50	0.3615	0.03831
					6500	23.3	17.21	60.44	0.3764	0.03833
					7000	24.0	18.05	64.35	0.3911	0.03835
				P 275 65R 18	5250	19.2	16.90	35.19	0.2512	0.03859
					5500	19.5	17.45	36.94	0.2563	0.03862
					6000	20.1	18.51	40.47	0.2667	0.03867
					6500	20.6	19.49	44.03	0.2771	0.03873
					7000	21.2	20.43	47.63	0.2876	0.03879
F150 SC w/163" WB	3.5L GTDI	Auto	4x2	P 235 75R 17	5250	19.2	16.97	31.41	0.2776	0.03936
					5500	19.4	17.56	32.79	0.2830	0.03939
					6000	19.8	18.71	35.54	0.2938	0.03945
					6500	20.3	19.81	38.30	0.3046	0.03951
					7000	20.8	20.86	41.07	0.3154	0.03957
				P 255 65R 17	5250	20.3	16.04	38.43	0.2944	0.03951
					5500	20.5	16.57	40.14	0.3002	0.03955
					6000	21.1	17.60	43.57	0.3118	0.03963
					6500	21.7	18.56	47.01	0.3235	0.03972
					7000	22.2	19.48	50.45	0.3352	0.03980
				LT 275 65R 18	5250	22.3	14.55	54.05	0.2572	0.04018
					5500	22.7	14.99	56.41	0.2619	0.04024
					6000	23.4	15.84	61.11	0.2710	0.04036
					6500	24.1	16.65	65.78	0.2802	0.04048
					7000	24.9	17.40	70.44	0.2893	0.04060
				LT 245 75R 17	5250	20.8	15.60	44.99	0.2549	0.03938
					5500	21.1	16.11	46.94	0.2592	0.03941
					6000	21.7	17.09	50.82	0.2677	0.03946
					6500	22.3	18.02	54.68	0.2763	0.03952
					7000	22.9	18.90	58.53	0.2848	0.03957
				P 265 60R 18	5250	19.7	16.51	35.05	0.3053	0.03894
					5500	20.0	17.06	36.71	0.3123	0.03895
					6000	20.5	18.10	40.04	0.3265	0.03898
					6500	21.1	19.10	43.41	0.3408	0.03900
					7000	21.6	20.03	46.79	0.3552	0.03903
				P 275 55R 20 OWL & Bridgestone BSW	5250	20.4	15.94	43.33	0.2218	0.03937
					5500	20.7	16.45	45.39	0.2250	0.03940
					6000	21.3	17.43	49.52	0.2314	0.03945
					6500	21.9	18.34	53.68	0.2379	0.03950
					7000	22.5	19.21	57.85	0.2444	0.03956
				P 275 55R 20 BSW	5250	20.7	15.69	43.81	0.2691	0.03919
					5500	21.0	16.17	46.01	0.2750	0.03920
					6000	21.7	17.09	50.44	0.2870	0.03924
					6500	22.4	17.93	54.91	0.2992	0.03928
					7000	23.1	18.73	59.42	0.3114	0.03931

ED_002078G_00001322-00679

ROADLOAD CERTIFICATION SPECIFICATIONS

2014 F150 GTDi

				P 265 70R 17	5250	20.3	16.02	38.79	0.2820	0.03969
					5500	20.6	16.54	40.55	0.2880	0.03974
					6000	21.2	17.55	44.08	0.2999	0.03982
					6500	21.7	18.50	47.62	0.3119	0.03991
					7000	22.3	19.40	51.16	0.3239	0.04000
				P 275 45R 22	5250	22.0	14.75	50.50	0.3388	0.03907
					5500	22.3	15.22	52.51	0.3464	0.03908
					6000	23.0	16.14	56.50	0.3615	0.03910
					6500	23.6	17.02	60.44	0.3764	0.03912
					7000	24.2	17.85	64.35	0.3911	0.03914
				P 275 65R 18	5250	19.5	16.67	35.19	0.2512	0.03938
					5500	19.8	17.22	36.94	0.2563	0.03941
					6000	20.3	18.27	40.47	0.2667	0.03946
					6500	20.9	19.25	44.03	0.2771	0.03952
					7000	21.5	20.18	47.63	0.2876	0.03958
F150 CC-Short	3.5L GTDI	Auto	4x2	P 235 75R 17	5500	18.8	18.07	32.79	0.2830	0.03776
					6000	19.3	19.24	35.54	0.2938	0.03782
					6500	19.8	20.35	38.30	0.3046	0.03788
				P 255 65R 17	5500	20.0	17.02	40.14	0.3002	0.03792
					6000	20.6	18.06	43.57	0.3118	0.03801
					6500	21.1	19.03	47.01	0.3235	0.03809
				LT 275 65R 18	5500	22.1	15.36	56.41	0.2619	0.03861
					6000	22.9	16.22	61.11	0.2710	0.03873
					6500	23.6	17.03	65.78	0.2802	0.03885
				LT 245 75R 17	5500	20.6	16.53	46.94	0.2592	0.03778
					6000	21.2	17.52	50.82	0.2677	0.03784
					6500	21.8	18.47	54.68	0.2763	0.03789
				P 265 60R 18	5500	19.4	17.53	36.71	0.3123	0.03733
					6000	20.0	18.60	40.04	0.3265	0.03735
					6500	20.5	19.60	43.41	0.3408	0.03737
				P 275 55R 20 OWL & Bridgestone BSW	5500	20.1	16.89	45.39	0.2250	0.03777
					6000	20.8	17.88	49.52	0.2314	0.03782
					6500	21.4	18.81	53.68	0.2379	0.03788
				P 275 55R 20 BSW	5500	20.5	16.60	46.01	0.2750	0.03758
					6000	21.2	17.52	50.44	0.2870	0.03761
					6500	21.9	18.38	54.91	0.2992	0.03765
				P 265 70R 17	5500	20.0	16.99	40.55	0.2880	0.03811
					6000	20.6	18.01	44.08	0.2999	0.03819
					6500	21.2	18.97	47.62	0.3119	0.03828
				P 275 45R 22	5500	21.8	15.60	52.51	0.3464	0.03745
					6000	22.4	16.53	56.50	0.3615	0.03747
					6500	23.1	17.42	60.44	0.3764	0.03749
				P 275 65R 18	5500	19.2	17.70	36.94	0.2563	0.03778
					6000	19.8	18.77	40.47	0.2667	0.03783
					6500	20.3	19.76	44.03	0.2771	0.03789
F150 CC-Long	3.5L GTDI	Auto	4x2	P 235 75R 17	5500	19.0	17.93	32.79	0.2830	0.03820
					6000	19.5	19.10	35.54	0.2938	0.03826
					6500	19.9	20.20	38.30	0.3046	0.03832
				P 255 65R 17	5500	20.1	16.90	40.14	0.3002	0.03836
					6000	20.7	17.93	43.57	0.3118	0.03845
					6500	21.3	18.90	47.01	0.3235	0.03853
				LT 275 65R 18	5500	22.3	15.26	56.41	0.2619	0.03905
					6000	23.0	16.12	61.11	0.2710	0.03917
					6500	23.7	16.92	65.78	0.2802	0.03929
				LT 245 75R 17	5500	20.7	16.41	46.94	0.2592	0.03822
					6000	21.3	17.40	50.82	0.2677	0.03828
					6500	21.9	18.34	54.68	0.2763	0.03833
				P 265 60R 18	5500	19.6	17.40	36.71	0.3123	0.03777
					6000	20.1	18.46	40.04	0.3265	0.03779
					6500	20.7	19.46	43.41	0.3408	0.03781
				P 275 55R 20 OWL & Bridgestone BSW	5500	20.3	16.77	45.39	0.2250	0.03821
					6000	20.9	17.76	49.52	0.2314	0.03826
					6500	21.5	18.68	53.68	0.2379	0.03832
				P 275 55R 20 BSW	5500	20.6	16.48	46.01	0.2750	0.03802
					6000	21.3	17.40	50.44	0.2870	0.03805
					6500	22.0	18.26	54.91	0.2992	0.03809
				P 265 70R 17	5500	20.2	16.87	40.55	0.2880	0.03855
					6000	20.8	17.89	44.08	0.2999	0.03863
					6500	21.3	18.84	47.62	0.3119	0.03872
				P 275 45R 22	5500	21.9	15.50	52.51	0.3464	0.03790

ED_002078G_00001322-00680

ROADLOAD CERTIFICATION SPECIFICATIONS

2014 F150 GTDi

					6000	22.6	16.43	56.50	0.3615	0.03791
					6500	23.2	17.31	60.44	0.3764	0.03793
				P 275 65R 18	5500	19.4	17.57	36.94	0.2563	0.03822
					6000	19.9	18.63	40.47	0.2667	0.03827
					6500	20.5	19.62	44.03	0.2771	0.03833
F150 RCL & Tremor	3.5L GTDI	Auto	4x4	P 235 75R 17	5250	20.5	15.83	32.25	0.3946	0.04081
					5500	20.8	16.40	33.62	0.4000	0.04084
					6000	21.2	17.50	36.38	0.4108	0.04090
					6500	21.7	18.55	39.14	0.4216	0.04096
					7000	22.1	19.56	41.90	0.4324	0.04102
				P 265 70R 17	5250	21.6	15.03	39.62	0.3952	0.04111
					5500	21.9	15.54	41.38	0.4012	0.04115
					6000	22.5	16.51	44.91	0.4131	0.04124
					6500	23.1	17.43	48.44	0.4251	0.04132
					7000	23.6	18.31	51.98	0.4371	0.04141
				LT 245 75R 17	5250	22.2	14.65	45.82	0.3688	0.04080
					5500	22.5	15.14	47.76	0.3731	0.04083
					6000	23.1	16.09	51.64	0.3816	0.04088
					6500	23.6	17.00	55.51	0.3902	0.04094
					7000	24.2	17.86	59.36	0.3986	0.04099
				P 275 65R 18	5250	20.8	15.62	36.01	0.3621	0.04077
					5500	21.1	16.15	37.76	0.3672	0.04080
					6000	21.6	17.16	41.29	0.3775	0.04086
					6500	22.2	18.11	44.85	0.3879	0.04091
					7000	22.8	19.01	48.45	0.3985	0.04097
				LT 275 65R 18	5250	23.6	13.74	54.87	0.3681	0.04157
					5500	24.0	14.17	57.23	0.3727	0.04163
					6000	24.7	15.00	61.92	0.3819	0.04175
					6500	25.4	15.79	66.60	0.3910	0.04187
					7000	26.2	16.53	71.25	0.4002	0.04199
				P 275 55R 20 OWL & Bridgestone BSW	5250	21.7	14.97	44.15	0.3334	0.04077
					5500	22.0	15.46	46.21	0.3366	0.04080
					6000	22.6	16.41	50.34	0.3431	0.04085
					6500	23.2	17.30	54.50	0.3496	0.04091
					7000	23.8	18.15	58.67	0.3561	0.04096
				P 275 55R 20 AT	5250	23.5	13.82	55.65	0.3719	0.04078
					5500	23.9	14.24	58.24	0.3769	0.04080
					6000	24.7	15.04	63.44	0.3871	0.04086
					6500	25.4	15.79	68.65	0.3973	0.04091
					7000	26.2	16.50	73.87	0.4075	0.04096
				P 275 55R 20 BSW	5250	22.0	14.75	44.63	0.3807	0.04059
					5500	22.4	15.22	46.83	0.3867	0.04061
					6000	23.0	16.11	51.26	0.3987	0.04064
					6500	23.7	16.94	55.73	0.4108	0.04068
					7000	24.4	17.72	60.24	0.4231	0.04072
				P 275 45R 22	5250	23.3	13.91	51.32	0.4513	0.04048
					5500	23.7	14.37	53.33	0.4589	0.04049
					6000	24.3	15.26	57.32	0.4740	0.04051
					6500	24.9	16.11	61.26	0.4889	0.04053
					7000	25.6	16.92	65.17	0.5036	0.04055
				P 255 65R 17	5250	21.7	14.99	39.27	0.4161	0.04100
					5500	22.0	15.50	40.99	0.4219	0.04104
					6000	22.5	16.48	44.42	0.4335	0.04112
					6500	23.1	17.42	47.86	0.4452	0.04121
					7000	23.6	18.31	51.30	0.4569	0.04129
F150 All SC except 163" WB	3.5L GTDI	Auto	4x4	P 235 75R 17	5500	20.6	16.55	33.62	0.4000	0.04028
					6000	21.0	17.66	36.38	0.4108	0.04034
					6500	21.5	18.71	39.14	0.4216	0.04040
					7000	22.0	19.73	41.90	0.4324	0.04046
					7500	22.4	20.70	44.67	0.4432	0.04052
				P 265 70R 17	5500	21.7	15.67	41.38	0.4012	0.04060
					6000	22.3	16.64	44.91	0.4131	0.04068
					6500	22.9	17.57	48.44	0.4251	0.04077
					7000	23.5	18.45	51.98	0.4371	0.04085
					7500	24.0	19.29	55.53	0.4491	0.04094
				LT 245 75R 17	5500	22.3	15.27	47.76	0.3731	0.04028
					6000	22.9	16.22	51.64	0.3816	0.04033
					6500	23.5	17.13	55.51	0.3902	0.04038
					7000	24.1	17.99	59.36	0.3986	0.04044

ED_002078G_00001322-00681

ROADLOAD CERTIFICATION SPECIFICATIONS

2014 F150 GTDi

					7500	24.6	18.82	63.20	0.4071	0.04049
				P 275 65R 18	5500	20.9	16.29	37.76	0.3672	0.04025
					6000	21.5	17.31	41.29	0.3775	0.04030
					6500	22.0	18.26	44.85	0.3879	0.04036
					7000	22.6	19.17	48.45	0.3985	0.04042
					7500	23.2	20.03	52.07	0.4091	0.04047
				LT 275 65R 18	5500	23.8	14.28	57.23	0.3727	0.04108
					6000	24.5	15.12	61.92	0.3819	0.04120
					6500	25.3	15.90	66.60	0.3910	0.04132
					7000	26.0	16.65	71.25	0.4002	0.04144
					7500	26.7	17.36	75.89	0.4092	0.04156
				P 275 55R 20 OWL & Bridgestone BSW	5500	21.8	15.59	46.21	0.3366	0.04024
					6000	22.4	16.54	50.34	0.3431	0.04030
					6500	23.0	17.44	54.50	0.3496	0.04035
					7000	23.7	18.29	58.67	0.3561	0.04040
					7500	24.3	19.09	62.85	0.3626	0.04046
				P 275 55R 20 AT	5500	23.7	14.35	58.24	0.3769	0.04025
					6000	24.5	15.15	63.44	0.3871	0.04030
					6500	25.3	15.91	68.65	0.3973	0.04035
					7000	26.0	16.61	73.87	0.4075	0.04041
					7500	26.8	17.28	79.10	0.4178	0.04046
				P 275 55R 20 BSW	5500	22.2	15.34	46.83	0.3867	0.04005
					6000	22.9	16.23	51.26	0.3987	0.04009
					6500	23.5	17.07	55.73	0.4108	0.04012
					7000	24.2	17.85	60.24	0.4231	0.04016
					7500	24.9	18.59	64.78	0.4354	0.04020
				P 275 45R 22	5500	23.5	14.48	53.33	0.4589	0.03994
					6000	24.1	15.38	57.32	0.4740	0.03996
					6500	24.8	16.23	61.26	0.4889	0.03998
					7000	25.4	17.05	65.17	0.5036	0.03999
					7500	26.0	17.83	69.04	0.5182	0.04001
				P 255 65R 17	5500	21.8	15.63	40.99	0.4219	0.04048
					6000	22.3	16.62	44.42	0.4335	0.04057
					6500	22.9	17.56	47.86	0.4452	0.04065
					7000	23.5	18.45	51.30	0.4569	0.04074
					7500	24.0	19.30	54.74	0.4685	0.04082
F150 SC w/163" WB	3.5L GTDI	Auto	4x4	P 235 75R 17	5500	20.9	16.31	33.62	0.4000	0.04118
					6000	21.3	17.41	36.38	0.4108	0.04124
					6500	21.8	18.46	39.14	0.4216	0.04130
					7000	22.3	19.46	41.90	0.4324	0.04136
					7500	22.7	20.43	44.67	0.4432	0.04142
				P 265 70R 17	5500	22.0	15.46	41.38	0.4012	0.04149
					6000	22.6	16.42	44.91	0.4131	0.04158
					6500	23.2	17.35	48.44	0.4251	0.04166
					7000	23.8	18.22	51.98	0.4371	0.04175
					7500	24.3	19.05	55.53	0.4491	0.04184
				LT 245 75R 17	5500	22.6	15.07	47.76	0.3731	0.04117
					6000	23.2	16.02	51.64	0.3816	0.04122
					6500	23.8	16.91	55.51	0.3902	0.04128
					7000	24.3	17.77	59.36	0.3986	0.04133
					7500	24.9	18.59	63.20	0.4071	0.04138
				P 275 65R 18	5500	21.2	16.06	37.76	0.3672	0.04114
					6000	21.8	17.07	41.29	0.3775	0.04120
					6500	22.3	18.02	44.85	0.3879	0.04125
					7000	22.9	18.92	48.45	0.3985	0.04131
					7500	23.5	19.77	52.07	0.4091	0.04137
				LT 275 65R 18	5500	24.1	14.11	57.23	0.3727	0.04197
					6000	24.8	14.94	61.92	0.3819	0.04209
					6500	25.6	15.72	66.60	0.3910	0.04221
					7000	26.3	16.46	71.25	0.4002	0.04233
					7500	27.0	17.17	75.89	0.4092	0.04245
				P 275 55R 20 OWL & Bridgestone BSW	5500	22.1	15.38	46.21	0.3366	0.04114
					6000	22.7	16.33	50.34	0.3431	0.04119
					6500	23.3	17.22	54.50	0.3496	0.04124
					7000	24.0	18.06	58.67	0.3561	0.04130
					7500	24.6	18.86	62.85	0.3626	0.04135
				P 275 55R 20 AT	5500	24.0	14.17	58.24	0.3769	0.04114
					6000	24.8	14.97	63.44	0.3871	0.04119
					6500	25.6	15.72	68.65	0.3973	0.04125
					7000	26.3	16.42	73.87	0.4075	0.04130

ROADLOAD CERTIFICATION SPECIFICATIONS

					2014 F150 GTDi					
					7500	27.1	17.09	79.10	0.4178	0.04135
				P 275 55R 20 BSW	5500	22.5	15.14	46.83	0.3867	0.04095
					6000	23.2	16.03	51.26	0.3987	0.04098
					6500	23.8	16.86	55.73	0.4108	0.04102
					7000	24.5	17.63	60.24	0.4231	0.04106
					7500	25.2	18.37	64.78	0.4354	0.04109
				P 275 45R 22	5500	23.8	14.30	53.33	0.4589	0.04083
					6000	24.4	15.19	57.32	0.4740	0.04085
					6500	25.1	16.04	61.26	0.4889	0.04087
					7000	25.7	16.85	65.17	0.5036	0.04089
					7500	26.3	17.63	69.04	0.5182	0.04091
				P 255 65R 17	5500	22.1	15.42	40.99	0.4219	0.04138
					6000	22.6	16.40	44.42	0.4335	0.04146
					6500	23.2	17.33	47.86	0.4452	0.04155
					7000	23.8	18.22	51.30	0.4569	0.04163
					7500	24.3	19.06	54.74	0.4685	0.04172
F150 All CC	3.5L GTDI	Auto	4x4	P 235 75R 17	5500	20.4	16.67	33.62	0.4000	0.03983
					6000	20.9	17.78	36.38	0.4108	0.03989
					6500	21.3	18.85	39.14	0.4216	0.03995
					7000	21.8	19.86	41.90	0.4324	0.04001
				P 265 70R 17	5500	21.6	15.77	41.38	0.4012	0.04015
					6000	22.2	16.76	44.91	0.4131	0.04023
					6500	22.7	17.69	48.44	0.4251	0.04032
					7000	23.3	18.57	51.98	0.4371	0.04041
				LT 245 75R 17	5500	22.1	15.37	47.76	0.3731	0.03983
					6000	22.7	16.33	51.64	0.3816	0.03988
					6500	23.3	17.24	55.51	0.3902	0.03994
					7000	23.9	18.10	59.36	0.3986	0.03999
				P 275 65R 18	5500	20.7	16.41	37.76	0.3672	0.03980
					6000	21.3	17.42	41.29	0.3775	0.03986
					6500	21.9	18.39	44.85	0.3879	0.03991
					7000	22.4	19.30	48.45	0.3985	0.03997
				LT 275 65R 18	5500	23.7	14.37	57.23	0.3727	0.04063
					6000	24.4	15.21	61.92	0.3819	0.04075
					6500	25.1	16.00	66.60	0.3910	0.04087
					7000	25.8	16.75	71.25	0.4002	0.04099
				P 275 55R 20 OWL & Bridgestone BSW	5500	21.7	15.70	46.21	0.3366	0.03980
					6000	22.3	16.65	50.34	0.3431	0.03985
					6500	22.9	17.55	54.50	0.3496	0.03990
					7000	23.5	18.40	58.67	0.3561	0.03996
				P 275 55R 20 AT	5500	23.5	14.44	58.24	0.3769	0.03980
					6000	24.3	15.25	63.44	0.3871	0.03985
					6500	25.1	16.00	68.65	0.3973	0.03991
					7000	25.9	16.71	73.87	0.4075	0.03996
				P 275 55R 20 BSW	5500	22.0	15.45	46.83	0.3867	0.03960
					6000	22.7	16.34	51.26	0.3987	0.03964
					6500	23.4	17.18	55.73	0.4108	0.03968
					7000	24.1	17.96	60.24	0.4231	0.03971
				P 275 45R 22	5500	23.3	14.57	53.33	0.4589	0.03949
					6000	24.0	15.47	57.32	0.4740	0.03951
					6500	24.6	16.33	61.26	0.4889	0.03953
					7000	25.2	17.15	65.17	0.5036	0.03955
				P 255 65R 17	5500	21.6	15.74	40.99	0.4219	0.04004
					6000	22.2	16.73	44.42	0.4335	0.04012
					6500	22.8	17.67	47.86	0.4452	0.04021
					7000	23.3	18.57	51.30	0.4569	0.04029

ED_002078G_00001322-00683

ROADLOAD CERTIFICATION SPECIFICATIONS

2014 F150 3.7L

Vehicle Description						Track Coefficients				
						3-Term		f0	f1	f2
Body	Eng	Trans	Drive	Tire	ETW	HP@50	55-45 CDT	lbf	lbf/mph	lbf/mph^2
F150 RCS	3.7L	Auto	4x2	P 235 75R 17	5000	17.9	17.25	17.79	0.8314	0.03010
					5250	18.2	17.88	19.17	0.8368	0.03013
					5500	18.4	18.50	20.54	0.8422	0.03016
					6000	18.9	19.69	23.30	0.8530	0.03022
					6500	19.3	20.82	26.06	0.8638	0.03028
				P 255 65R 17	5000	19.0	16.33	24.13	0.8790	0.02962
					5250	19.2	16.89	25.85	0.8848	0.02966
					5500	19.5	17.44	27.56	0.8906	0.02970
					6000	20.1	18.49	30.99	0.9023	0.02979
					6500	20.6	19.48	34.43	0.9139	0.02987
				LT 275 65R 18	5000	21.0	14.71	39.90	0.7709	0.03168
					5250	21.4	15.18	42.27	0.7755	0.03174
					5500	21.8	15.63	44.62	0.7802	0.03180
					6000	22.5	16.50	49.32	0.7893	0.03192
					6500	23.2	17.31	54.00	0.7985	0.03204
				LT 245 75R 17	5000	19.6	15.80	31.03	0.7891	0.03053
					5250	19.9	16.34	32.98	0.7934	0.03056
					5500	20.2	16.87	34.92	0.7977	0.03059
					6000	20.8	17.87	38.80	0.8062	0.03064
					6500	21.4	18.82	42.67	0.8147	0.03069
				P 265 60R 18	5000	18.4	16.81	21.01	0.8707	0.02944
					5250	18.7	17.39	22.66	0.8778	0.02945
					5500	19.0	17.95	24.32	0.8848	0.02946
					6000	19.5	19.03	27.66	0.8990	0.02949
					6500	20.1	20.04	31.02	0.9133	0.02951
				P 275 55R 20 AS	5000	19.1	16.17	29.43	0.7422	0.03080
					5250	19.4	16.71	31.48	0.7454	0.03083
					5500	19.7	17.23	33.54	0.7487	0.03085
					6000	20.4	18.23	37.68	0.7551	0.03091
					6500	21.0	19.16	41.83	0.7616	0.03096
				P 265 70R 17	5000	19.0	16.25	25.07	0.8098	0.03091
					5250	19.3	16.80	26.83	0.8158	0.03096
					5500	19.6	17.34	28.59	0.8218	0.03100
					6000	20.2	18.37	32.12	0.8337	0.03109
					6500	20.8	19.35	35.66	0.8457	0.03117
				P 275 65R 18	5000	18.3	16.93	21.66	0.7644	0.03091
					5250	18.6	17.51	23.40	0.7695	0.03094
					5500	18.8	18.07	25.15	0.7746	0.03096
					6000	19.4	19.14	28.68	0.7850	0.03102
					6500	20.0	20.15	32.25	0.7954	0.03108
F150 RCL	3.7L	Auto	4x2	P 235 75R 17	5000	18.2	17.03	17.79	0.8314	0.03080
					5250	18.4	17.66	19.17	0.8368	0.03083
					5500	18.6	18.27	20.54	0.8422	0.03086
					6000	19.1	19.45	23.30	0.8530	0.03092
					6500	19.6	20.57	26.06	0.8638	0.03098
				P 255 65R 17	5000	19.2	16.13	24.13	0.8790	0.03032
					5250	19.5	16.69	25.85	0.8848	0.03036
					5500	19.7	17.24	27.56	0.8906	0.03040
					6000	20.3	18.28	30.99	0.9023	0.03049
					6500	20.9	19.26	34.43	0.9139	0.03057
				LT 275 65R 18	5000	21.3	14.55	39.90	0.7709	0.03238
					5250	21.6	15.02	42.27	0.7755	0.03244
					5500	22.0	15.47	44.62	0.7802	0.03250
					6000	22.7	16.33	49.32	0.7893	0.03262
					6500	23.4	17.14	54.00	0.7985	0.03274
				LT 245 75R 17	5000	19.8	15.62	31.03	0.7891	0.03123
					5250	20.1	16.15	32.98	0.7934	0.03126
					5500	20.4	16.67	34.92	0.7977	0.03129
					6000	21.0	17.67	38.80	0.8062	0.03134
					6500	21.6	18.62	42.67	0.8147	0.03139
				P 265 60R 18	5000	18.7	16.60	21.01	0.8707	0.03014
					5250	18.9	17.17	22.66	0.8778	0.03015
					5500	19.2	17.73	24.32	0.8848	0.03017
					6000	19.7	18.80	27.66	0.8990	0.03019
					6500	20.3	19.82	31.02	0.9133	0.03021
				P 275 55R 20 AS	5000	19.4	15.97	29.43	0.7422	0.03150

ED_002078G_00001322-00684

ROADLOAD CERTIFICATION SPECIFICATIONS

2014 F150 3.7L

						Track Coefficients			
					5250	19.7	16.51	31.48	0.7454	0.03153
					5500	20.0	17.03	33.54	0.7487	0.03155
					6000	20.6	18.02	37.68	0.7551	0.03161
					6500	21.2	18.95	41.83	0.7616	0.03166
				P 265 70R 17	5000	19.3	16.05	25.07	0.8098	0.03161
					5250	19.6	16.60	26.83	0.8158	0.03166
					5500	19.9	17.14	28.59	0.8218	0.03170
					6000	20.4	18.16	32.12	0.8337	0.03179
					6500	21.0	19.13	35.66	0.8457	0.03187
				P 275 65R 18	5000	18.5	16.72	21.66	0.7644	0.03161
					5250	18.8	17.29	23.40	0.7695	0.03164
					5500	19.1	17.85	25.15	0.7746	0.03167
					6000	19.6	18.92	28.68	0.7850	0.03172
					6500	20.2	19.91	32.25	0.7954	0.03178
F150 All SC except 163" WB	3.7L	Auto	4x2	P 235 75R 17	5250	18.1	18.00	19.17	0.8368	0.02978
					5500	18.3	18.62	20.54	0.8422	0.02981
					6000	18.8	19.81	23.30	0.8530	0.02987
					6500	19.2	20.94	26.06	0.8638	0.02993
					7000	19.7	22.02	28.82	0.8746	0.02999
				P 255 65R 17	5250	19.1	17.00	25.85	0.8848	0.02931
					5500	19.4	17.55	27.56	0.8906	0.02935
					6000	20.0	18.60	30.99	0.9023	0.02944
					6500	20.5	19.59	34.43	0.9139	0.02952
					7000	21.1	20.53	37.87	0.9256	0.02961
				LT 275 65R 18	5250	21.3	15.26	42.27	0.7755	0.03139
					5500	21.6	15.72	44.62	0.7802	0.03145
					6000	22.4	16.59	49.32	0.7893	0.03157
					6500	23.1	17.40	54.00	0.7985	0.03169
					7000	23.8	18.17	58.65	0.8076	0.03181
				LT 245 75R 17	5250	19.8	16.44	32.98	0.7934	0.03021
					5500	20.1	16.96	34.92	0.7977	0.03024
					6000	20.6	17.97	38.80	0.8062	0.03029
					6500	21.2	18.93	42.67	0.8147	0.03034
					7000	21.8	19.83	46.52	0.8232	0.03039
				P 265 60R 18	5250	18.6	17.50	22.66	0.8778	0.02910
					5500	18.8	18.06	24.32	0.8848	0.02911
					6000	19.4	19.14	27.66	0.8990	0.02914
					6500	19.9	20.16	31.02	0.9133	0.02916
					7000	20.5	21.12	34.40	0.9277	0.02919
				P 275 55R 20 AS	5250	19.3	16.81	31.48	0.7454	0.03048
					5500	19.6	17.33	33.54	0.7487	0.03050
					6000	20.2	18.33	37.68	0.7551	0.03056
					6500	20.9	19.27	41.83	0.7616	0.03061
					7000	21.5	20.15	46.00	0.7681	0.03066
				P 265 70R 17	5250	19.2	16.91	26.83	0.8158	0.03061
					5500	19.5	17.45	28.59	0.8218	0.03065
					6000	20.1	18.48	32.12	0.8337	0.03074
					6500	20.7	19.45	35.66	0.8457	0.03082
					7000	21.2	20.37	39.20	0.8577	0.03091
				P 275 65R 18	5250	18.4	17.62	23.40	0.7695	0.03059
					5500	18.7	18.19	25.15	0.7746	0.03061
					6000	19.3	19.26	28.68	0.7850	0.03067
					6500	19.8	20.26	32.25	0.7954	0.03073
					7000	20.4	21.21	35.84	0.8059	0.03078
F150 SC w/163" WB	3.7L	Auto	4x2	P 235 75R 17	5250	18.3	17.74	19.17	0.8368	0.03057
					5500	18.6	18.36	20.54	0.8422	0.03060
					6000	19.0	19.54	23.30	0.8530	0.03066
					6500	19.5	20.66	26.06	0.8638	0.03072
					7000	19.9	21.73	28.82	0.8746	0.03078
				P 255 65R 17	5250	19.4	16.77	25.85	0.8848	0.03010
					5500	19.7	17.31	27.56	0.8906	0.03014
					6000	20.2	18.35	30.99	0.9023	0.03023
					6500	20.8	19.34	34.43	0.9139	0.03031
					7000	21.4	20.28	37.87	0.9256	0.03039
				LT 275 65R 18	5250	21.5	15.08	42.27	0.7755	0.03217
					5500	21.9	15.53	44.62	0.7802	0.03224
					6000	22.6	16.39	49.32	0.7893	0.03236
					6500	23.4	17.20	54.00	0.7985	0.03248
					7000	24.1	17.97	58.65	0.8076	0.03260

ROADLOAD CERTIFICATION SPECIFICATIONS

2014 F150 3.7L

						Track Coefficients				
				LT 245 75R 17	5250	20.0	16.22	32.98	0.7934	0.03100
					5500	20.3	16.75	34.92	0.7977	0.03102
					6000	20.9	17.75	38.80	0.8062	0.03108
					6500	21.5	18.70	42.67	0.8147	0.03113
					7000	22.1	19.60	46.52	0.8232	0.03118
				P 265 60R 18	5250	18.8	17.25	22.66	0.8778	0.02989
					5500	19.1	17.82	24.32	0.8848	0.02990
					6000	19.7	18.89	27.66	0.8990	0.02993
					6500	20.2	19.90	31.02	0.9133	0.02995
					7000	20.8	20.86	34.40	0.9277	0.02997
				P 275 55R 20 AS	5250	19.6	16.58	31.48	0.7454	0.03127
					5500	19.9	17.10	33.54	0.7487	0.03129
					6000	20.5	18.10	37.68	0.7551	0.03135
					6500	21.1	19.03	41.83	0.7616	0.03140
					7000	21.7	19.91	46.00	0.7681	0.03145
				P 265 70R 17	5250	19.5	16.68	26.83	0.8158	0.03140
					5500	19.8	17.22	28.59	0.8218	0.03144
					6000	20.3	18.24	32.12	0.8337	0.03152
					6500	20.9	19.21	35.66	0.8457	0.03161
					7000	21.5	20.13	39.20	0.8577	0.03170
				P 275 65R 18	5250	18.7	17.37	23.40	0.7695	0.03137
					5500	19.0	17.93	25.15	0.7746	0.03140
					6000	19.5	19.00	28.68	0.7850	0.03146
					6500	20.1	20.00	32.25	0.7954	0.03152
					7000	20.7	20.94	35.84	0.8059	0.03157
F150 All CC	3.7L	Auto	4x2	P 235 75R 17	5500	18.1	18.82	20.54	0.8422	0.02923
					6000	18.6	20.01	23.30	0.8530	0.02929
					6500	19.0	21.15	26.06	0.8638	0.02935
				P 255 65R 17	5500	19.2	17.72	27.56	0.8906	0.02877
					6000	19.8	18.78	30.99	0.9023	0.02885
					6500	20.3	19.78	34.43	0.9139	0.02894
				LT 275 65R 18	5500	21.4	15.86	44.62	0.7802	0.03086
					6000	22.2	16.73	49.32	0.7893	0.03098
					6500	22.9	17.55	54.00	0.7985	0.03110
				LT 245 75R 17	5500	19.9	17.13	34.92	0.7977	0.02965
					6000	20.4	18.14	38.80	0.8062	0.02970
					6500	21.0	19.10	42.67	0.8147	0.02976
				P 265 60R 18	5500	18.7	18.25	24.32	0.8848	0.02853
					6000	19.2	19.34	27.66	0.8990	0.02855
					6500	19.8	20.36	31.02	0.9133	0.02858
				P 275 55R 20 AS	5500	19.4	17.50	33.54	0.7487	0.02992
					6000	20.0	18.51	37.68	0.7551	0.02997
					6500	20.7	19.45	41.83	0.7616	0.03003
				P 265 70R 17	5500	19.3	17.62	28.59	0.8218	0.03007
					6000	19.9	18.66	32.12	0.8337	0.03015
					6500	20.5	19.64	35.66	0.8457	0.03024
				P 275 65R 18	5500	18.5	18.37	25.15	0.7746	0.03003
					6000	19.1	19.45	28.68	0.7850	0.03009
					6500	19.6	20.47	32.25	0.7954	0.03014
F150 RCS	3.7L	Auto	4x4	P 235 75R 17	5250	19.4	16.73	27.83	0.6323	0.03449
					5500	19.7	17.32	29.21	0.6377	0.03452
					6000	20.1	18.46	31.96	0.6485	0.03458
					6500	20.6	19.55	34.72	0.6593	0.03464
					7000	21.0	20.59	37.49	0.6701	0.03470
				P 265 70R 17	5250	20.5	15.81	35.30	0.6220	0.03508
					5500	20.8	16.33	37.06	0.6280	0.03513
					6000	21.4	17.33	40.60	0.6400	0.03521
					6500	22.0	18.27	44.13	0.6520	0.03530
					7000	22.6	19.17	47.67	0.6640	0.03539
				LT 245 75R 17	5250	21.1	15.40	41.48	0.5977	0.03473
					5500	21.4	15.90	43.43	0.6019	0.03475
					6000	22.0	16.88	47.31	0.6105	0.03481
					6500	22.6	17.80	51.18	0.6190	0.03486
					7000	23.2	18.68	55.03	0.6275	0.03491
				P 275 65R 18	5250	19.8	16.44	31.76	0.5824	0.03493
					5500	20.0	16.99	33.51	0.5875	0.03495
					6000	20.6	18.03	37.04	0.5978	0.03501
					6500	21.2	19.00	40.60	0.6082	0.03507

ED_002078G_00001322-00686

ROADLOAD CERTIFICATION SPECIFICATIONS

2014 F150 3.7L

						Track Coefficients				
					7000	21.7	19.93	44.20	0.6188	0.03512
				LT 275 65R 18	5250	22.6	14.37	50.62	0.5884	0.03573
					5500	22.9	14.82	52.97	0.5930	0.03579
					6000	23.7	15.66	57.67	0.6022	0.03591
					6500	24.4	16.46	62.35	0.6113	0.03603
					7000	25.1	17.22	67.00	0.6205	0.03615
				P 275 55R 20 AS	5250	20.6	15.73	39.88	0.5560	0.03487
					5500	21.0	16.24	41.94	0.5592	0.03489
					6000	21.6	17.21	46.07	0.5657	0.03494
					6500	22.2	18.12	50.22	0.5721	0.03500
					7000	22.8	18.98	54.39	0.5787	0.03505
				P 275 55R 20 AT	5250	22.4	14.46	51.38	0.5944	0.03487
					5500	22.8	14.89	53.97	0.5995	0.03490
					6000	23.6	15.71	59.17	0.6097	0.03495
					6500	24.4	16.47	64.38	0.6199	0.03500
					7000	25.2	17.18	69.60	0.6301	0.03505
				P 255 65R 17	5250	20.5	15.83	34.74	0.6670	0.03431
					5500	20.8	16.36	36.45	0.6728	0.03435
					6000	21.4	17.37	39.88	0.6845	0.03444
					6500	21.9	18.34	43.32	0.6961	0.03452
					7000	22.5	19.25	46.76	0.7078	0.03460
F150 RCL	3.7L	Auto	4x4	P 235 75R 17	5250	19.6	16.56	27.83	0.6323	0.03511
					5500	19.9	17.14	29.21	0.6377	0.03514
					6000	20.3	18.28	31.96	0.6485	0.03520
					6500	20.8	19.36	34.72	0.6593	0.03526
					7000	21.2	20.39	37.49	0.6701	0.03532
				P 265 70R 17	5250	20.8	15.65	35.30	0.6220	0.03570
					5500	21.0	16.17	37.06	0.6280	0.03575
					6000	21.6	17.16	40.60	0.6400	0.03583
					6500	22.2	18.11	44.13	0.6520	0.03592
					7000	22.8	19.00	47.67	0.6640	0.03601
				LT 245 75R 17	5250	21.3	15.25	41.48	0.5977	0.03535
					5500	21.6	15.75	43.43	0.6019	0.03538
					6000	22.2	16.72	47.31	0.6105	0.03543
					6500	22.8	17.64	51.18	0.6190	0.03548
					7000	23.4	18.52	55.03	0.6275	0.03553
				P 275 65R 18	5250	20.0	16.27	31.76	0.5824	0.03555
					5500	20.2	16.82	33.51	0.5875	0.03557
					6000	20.8	17.85	37.04	0.5978	0.03563
					6500	21.4	18.82	40.60	0.6082	0.03569
					7000	21.9	19.74	44.20	0.6188	0.03574
				LT 275 65R 18	5250	22.8	14.24	50.62	0.5884	0.03635
					5500	23.2	14.69	52.97	0.5930	0.03641
					6000	23.9	15.53	57.67	0.6022	0.03653
					6500	24.6	16.33	62.35	0.6113	0.03665
					7000	25.3	17.08	67.00	0.6205	0.03677
				P 275 55R 20 AS	5250	20.9	15.57	39.88	0.5560	0.03549
					5500	21.2	16.08	41.94	0.5592	0.03551
					6000	21.8	17.04	46.07	0.5657	0.03557
					6500	22.4	17.95	50.22	0.5721	0.03562
					7000	23.0	18.81	54.39	0.5787	0.03567
				P 275 55R 20 AT	5250	22.6	14.33	51.38	0.5944	0.03549
					5500	23.0	14.76	53.97	0.5995	0.03552
					6000	23.8	15.57	59.17	0.6097	0.03557
					6500	24.6	16.33	64.38	0.6199	0.03562
					7000	25.4	17.05	69.60	0.6301	0.03567
				P 255 65R 17	5250	20.7	15.68	34.74	0.6670	0.03493
					5500	21.0	16.20	36.45	0.6728	0.03497
					6000	21.6	17.21	39.88	0.6845	0.03506
					6500	22.1	18.17	43.32	0.6961	0.03514
					7000	22.7	19.07	46.76	0.7078	0.03522
F150 All SC except 163" WB	3.7L	Auto	4x4	P 235 75R 17	5500	19.6	17.36	29.21	0.6377	0.03439
					6000	20.1	18.50	31.96	0.6485	0.03445
					6500	20.5	19.59	34.72	0.6593	0.03451
					7000	21.0	20.63	37.49	0.6701	0.03457
					7500	21.4	21.63	40.25	0.6809	0.03463
				P 265 70R 17	5500	20.8	16.36	37.06	0.6280	0.03500
					6000	21.4	17.36	40.60	0.6400	0.03509
					6500	22.0	18.31	44.13	0.6520	0.03518

ED_002078G_00001322-00687

ROADLOAD CERTIFICATION SPECIFICATIONS

2014 F150 3.7L

				Track Coefficients		
	7000	22.5	19.21	47.67	0.6640	0.03526
	7500	23.1	20.06	51.22	0.6760	0.03535
LT 245 75R 17	5500	21.3	15.93	43.43	0.6019	0.03463
	6000	21.9	16.91	47.31	0.6105	0.03468
	6500	22.5	17.84	51.18	0.6190	0.03474
	7000	23.1	18.72	55.03	0.6275	0.03479
	7500	23.7	19.56	58.87	0.6360	0.03484
P 275 65R 18	5500	20.0	17.02	33.51	0.5875	0.03483
	6000	20.6	18.06	37.04	0.5978	0.03489
	6500	21.1	19.04	40.60	0.6082	0.03494
	7000	21.7	19.96	44.20	0.6188	0.03500
	7500	22.3	20.84	47.82	0.6294	0.03506
LT 275 65R 18	5500	22.9	14.84	52.97	0.5930	0.03566
	6000	23.6	15.69	57.67	0.6022	0.03578
	6500	24.4	16.49	62.35	0.6113	0.03590
	7000	25.1	17.25	67.00	0.6205	0.03602
	7500	25.8	17.96	71.64	0.6295	0.03614
P 275 55R 20 AS	5500	20.9	16.27	41.94	0.5592	0.03477
	6000	21.5	17.24	46.07	0.5657	0.03482
	6500	22.1	18.16	50.22	0.5721	0.03487
	7000	22.8	19.02	54.39	0.5787	0.03493
	7500	23.4	19.83	58.58	0.5852	0.03498
P 275 55R 20 AT	5500	22.8	14.92	53.97	0.5995	0.03477
	6000	23.6	15.74	59.17	0.6097	0.03482
	6500	24.3	16.50	64.38	0.6199	0.03488
	7000	25.1	17.21	69.60	0.6301	0.03493
	7500	25.9	17.88	74.83	0.6403	0.03498
P 255 65R 17	5500	20.8	16.39	36.45	0.6728	0.03423
	6000	21.3	17.41	39.88	0.6845	0.03431
	6500	21.9	18.37	43.32	0.6961	0.03439
	7000	22.4	19.28	46.76	0.7078	0.03448
	7500	23.0	20.15	50.21	0.7195	0.03456

ED_002078G_00001322-00688

ROADLOAD CERTIFICATION SPECIFICATIONS

2014 F150 5.0L/6.2L

Vehicle Description						Track Coefficients				
						3-Term		f0	f1	f2
Body	Eng	Trans	Drive	Tire	ETW	HP@50	55-45 CDT	lbf	lbf/mph	lbf/mph^2
F150 RCS	5.0L	Auto	4x2	P 235 75R 17	5000	18.3	16.93	30.03	0.2722	0.03740
					5250	18.5	17.56	31.41	0.2776	0.03743
					5500	18.7	18.17	32.79	0.2830	0.03746
					6000	19.2	19.34	35.54	0.2938	0.03752
					6500	19.7	20.46	38.30	0.3046	0.03758
				P 255 65R 17	5000	19.3	16.01	36.71	0.2885	0.03754
					5250	19.6	16.56	38.43	0.2944	0.03758
					5500	19.9	17.11	40.14	0.3002	0.03762
					6000	20.5	18.14	43.57	0.3118	0.03771
					6500	21.0	19.13	47.01	0.3235	0.03779
				LT 275 65R 18	5000	21.3	14.51	51.69	0.2526	0.03819
					5250	21.7	14.98	54.05	0.2572	0.03825
					5500	22.0	15.43	56.41	0.2619	0.03831
					6000	22.8	16.29	61.11	0.2710	0.03843
					6500	23.5	17.10	65.78	0.2802	0.03855
				LT 245 75R 17	5000	19.9	15.55	43.04	0.2506	0.03743
					5250	20.2	16.09	44.99	0.2549	0.03746
					5500	20.5	16.61	46.94	0.2592	0.03748
					6000	21.1	17.61	50.82	0.2677	0.03754
					6500	21.7	18.55	54.68	0.2763	0.03759
				P 265 60R 18	5000	18.8	16.49	33.39	0.2983	0.03700
					5250	19.0	17.06	35.05	0.3053	0.03701
					5500	19.3	17.62	36.71	0.3123	0.03703
					6000	19.9	18.69	40.04	0.3265	0.03705
					6500	20.4	19.69	43.41	0.3408	0.03707
				P 275 55R 20 OWL & Bridgestone BSW	5000	19.4	15.92	41.27	0.2186	0.03742
					5250	19.7	16.46	43.33	0.2218	0.03744
					5500	20.0	16.97	45.39	0.2250	0.03747
					6000	20.7	17.97	49.52	0.2314	0.03752
					6500	21.3	18.89	53.68	0.2379	0.03758
				P 275 55R 20 BSW	5000	19.7	15.69	41.62	0.2631	0.03724
					5250	20.1	16.19	43.81	0.2691	0.03726
					5500	20.4	16.68	46.01	0.2750	0.03728
					6000	21.1	17.60	50.44	0.2870	0.03731
					6500	21.8	18.46	54.91	0.2992	0.03735
				P 265 70R 17	5000	19.4	15.99	37.03	0.2760	0.03772
					5250	19.6	16.54	38.79	0.2820	0.03777
					5500	19.9	17.08	40.55	0.2880	0.03781
					6000	20.5	18.10	44.08	0.2999	0.03790
					6500	21.1	19.06	47.62	0.3119	0.03798
				P 275 45R 22	5000	21.1	14.69	48.48	0.3312	0.03714
					5250	21.4	15.19	50.50	0.3388	0.03715
					5500	21.7	15.67	52.51	0.3464	0.03716
					6000	22.3	16.60	56.50	0.3615	0.03718
					6500	23.0	17.49	60.44	0.3764	0.03720
				P 275 65R 18	5000	18.6	16.67	33.45	0.2461	0.03742
					5250	18.8	17.24	35.19	0.2512	0.03745
					5500	19.1	17.80	36.94	0.2563	0.03748
					6000	19.7	18.86	40.47	0.2667	0.03754
					6500	20.2	19.86	44.03	0.2771	0.03759
F150 RCL	5.0L	Auto	4x2	P 235 75R 17	5000	18.5	16.72	30.03	0.2722	0.03810
					5250	18.7	17.34	31.41	0.2776	0.03813
					5500	19.0	17.94	32.79	0.2830	0.03816
					6000	19.4	19.11	35.54	0.2938	0.03822
					6500	19.9	20.22	38.30	0.3046	0.03828
				P 255 65R 17	5000	19.6	15.82	36.71	0.2885	0.03824
					5250	19.8	16.37	38.43	0.2944	0.03828
					5500	20.1	16.91	40.14	0.3002	0.03832
					6000	20.7	17.94	43.57	0.3118	0.03841
					6500	21.3	18.92	47.01	0.3235	0.03849
				LT 275 65R 18	5000	21.5	14.35	51.69	0.2526	0.03889
					5250	21.9	14.82	54.05	0.2572	0.03895
					5500	22.3	15.27	56.41	0.2619	0.03901
					6000	23.0	16.13	61.11	0.2710	0.03913
					6500	23.7	16.93	65.78	0.2802	0.03925
				LT 245 75R 17	5000	20.1	15.37	43.04	0.2506	0.03813

ROADLOAD CERTIFICATION SPECIFICATIONS

2014 F150 5.0L/6.2L

Vehicle Description						Track Coefficients				
						3-Term		f0	f1	f2
Body	Eng	Trans	Drive	Tire	ETW	HP@50	55-45 CDT	lbf	lbf/mph	lbf/mph^2
					5250	20.4	15.91	44.99	0.2549	0.03816
					5500	20.7	16.42	46.94	0.2592	0.03818
					6000	21.3	17.41	50.82	0.2677	0.03824
					6500	21.9	18.35	54.68	0.2763	0.03829
				P 265 60R 18	5000	19.0	16.28	33.39	0.2983	0.03770
					5250	19.3	16.85	35.05	0.3053	0.03772
					5500	19.6	17.41	36.71	0.3123	0.03773
					6000	20.1	18.47	40.04	0.3265	0.03775
					6500	20.7	19.47	43.41	0.3408	0.03778
				P 275 55R 20 OWL & Bridgestone BSW	5000	19.7	15.73	41.27	0.2186	0.03812
					5250	20.0	16.26	43.33	0.2218	0.03814
					5500	20.3	16.78	45.39	0.2250	0.03817
					6000	20.9	17.77	49.52	0.2314	0.03822
					6500	21.5	18.69	53.68	0.2379	0.03828
				P 275 55R 20 BSW	5000	20.0	15.51	41.62	0.2631	0.03794
					5250	20.3	16.01	43.81	0.2691	0.03796
					5500	20.6	16.49	46.01	0.2750	0.03798
					6000	21.3	17.41	50.44	0.2870	0.03802
					6500	22.0	18.27	54.91	0.2992	0.03805
				P 265 70R 17	5000	19.6	15.80	37.03	0.2760	0.03842
					5250	19.9	16.35	38.79	0.2820	0.03847
					5500	20.2	16.88	40.55	0.2880	0.03851
					6000	20.7	17.89	44.08	0.2999	0.03860
					6500	21.3	18.86	47.62	0.3119	0.03868
				P 275 45R 22	5000	21.3	14.53	48.48	0.3312	0.03784
					5250	21.6	15.02	50.50	0.3388	0.03785
					5500	21.9	15.51	52.51	0.3464	0.03786
					6000	22.6	16.43	56.50	0.3615	0.03788
					6500	23.2	17.32	60.44	0.3764	0.03790
				P 275 65R 18	5000	18.8	16.46	33.45	0.2461	0.03812
					5250	19.1	17.03	35.19	0.2512	0.03815
					5500	19.4	17.58	36.94	0.2563	0.03818
					6000	19.9	18.64	40.47	0.2667	0.03824
					6500	20.5	19.63	44.03	0.2771	0.03829
F150 All SC except 163" WB	5.0L/6.2L	Auto	4x2	P 235 75R 17	5250	18.4	17.67	31.41	0.2776	0.03708
					5500	18.6	18.28	32.79	0.2830	0.03711
					6000	19.1	19.46	35.54	0.2938	0.03717
					6500	19.5	20.58	38.30	0.3046	0.03723
					7000	20.0	21.65	41.07	0.3154	0.03729
				P 255 65R 17	5250	19.5	16.66	38.43	0.2944	0.03723
					5500	19.8	17.21	40.14	0.3002	0.03727
					6000	20.3	18.25	43.57	0.3118	0.03736
					6500	20.9	19.23	47.01	0.3235	0.03744
					7000	21.5	20.16	50.45	0.3352	0.03753
				LT 275 65R 18	5250	21.6	15.06	54.05	0.2572	0.03790
					5500	21.9	15.51	56.41	0.2619	0.03796
					6000	22.6	16.37	61.11	0.2710	0.03808
					6500	23.4	17.19	65.78	0.2802	0.03820
					7000	24.1	17.95	70.44	0.2893	0.03832
				LT 245 75R 17	5250	20.1	16.18	44.99	0.2549	0.03711
					5500	20.4	16.70	46.94	0.2592	0.03713
					6000	21.0	17.70	50.82	0.2677	0.03719
					6500	21.5	18.65	54.68	0.2763	0.03724
					7000	22.1	19.55	58.53	0.2848	0.03729
				P 265 60R 18	5250	18.9	17.17	35.05	0.3053	0.03666
					5500	19.2	17.72	36.71	0.3123	0.03668
					6000	19.7	18.80	40.04	0.3265	0.03670
					6500	20.3	19.81	43.41	0.3408	0.03672
					7000	20.9	20.76	46.79	0.3552	0.03675
				P 275 55R 20 OWL & Bridgestone BSW	5250	19.6	16.55	43.33	0.2218	0.03709
					5500	19.9	17.07	45.39	0.2250	0.03712
					6000	20.5	18.07	49.52	0.2314	0.03717
					6500	21.2	19.00	53.68	0.2379	0.03723
					7000	21.8	19.88	57.85	0.2444	0.03728
				P 275 55R 20 BSW	5250	19.9	16.29	43.81	0.2691	0.03691
					5500	20.3	16.78	46.01	0.2750	0.03693

ROADLOAD CERTIFICATION SPECIFICATIONS

2014 F150 5.0L/6.2L

Vehicle Description						Track Coefficients				
						3-Term		f0	f1	f2
Body	Eng	Trans	Drive	Tire	ETW	HP@50	55-45 CDT	lbf	lbf/mph	lbf/mph^2
					6000	21.0	17.70	50.44	0.2870	0.03696
					6500	21.6	18.56	54.91	0.2992	0.03700
					7000	22.3	19.36	59.42	0.3114	0.03704
				P 265 70R 17	5250	19.5	16.64	38.79	0.2820	0.03742
					5500	19.8	17.18	40.55	0.2880	0.03746
					6000	20.4	18.20	44.08	0.2999	0.03755
					6500	21.0	19.17	47.62	0.3119	0.03763
					7000	21.6	20.08	51.16	0.3239	0.03772
				P 275 45R 22	5250	21.3	15.27	50.50	0.3388	0.03680
					5500	21.6	15.76	52.51	0.3464	0.03681
					6000	22.2	16.69	56.50	0.3615	0.03683
					6500	22.9	17.58	60.44	0.3764	0.03685
					7000	23.5	18.43	64.35	0.3911	0.03686
				P 275 65R 18	5250	18.7	17.35	35.19	0.2512	0.03710
					5500	19.0	17.91	36.94	0.2563	0.03713
					6000	19.6	18.97	40.47	0.2667	0.03719
					6500	20.1	19.97	44.03	0.2771	0.03724
					7000	20.7	20.91	47.63	0.2876	0.03730
F150 SC w/163" WB	5.0L/6.2L	Auto	4x2	P 235 75R 17	5250	18.7	17.42	31.41	0.2776	0.03787
					5500	18.9	18.02	32.79	0.2830	0.03790
					6000	19.4	19.19	35.54	0.2938	0.03796
					6500	19.8	20.31	38.30	0.3046	0.03802
					7000	20.3	21.37	41.07	0.3154	0.03808
				P 255 65R 17	5250	19.8	16.44	38.43	0.2944	0.03802
					5500	20.0	16.98	40.14	0.3002	0.03806
					6000	20.6	18.01	43.57	0.3118	0.03815
					6500	21.2	18.99	47.01	0.3235	0.03823
					7000	21.7	19.92	50.45	0.3352	0.03832
				LT 275 65R 18	5250	21.8	14.88	54.05	0.2572	0.03869
					5500	22.2	15.33	56.41	0.2619	0.03875
					6000	22.9	16.19	61.11	0.2710	0.03887
					6500	23.6	16.99	65.78	0.2802	0.03899
					7000	24.4	17.76	70.44	0.2893	0.03911
				LT 245 75R 17	5250	20.3	15.98	44.99	0.2549	0.03789
					5500	20.6	16.49	46.94	0.2592	0.03792
					6000	21.2	17.48	50.82	0.2677	0.03798
					6500	21.8	18.43	54.68	0.2763	0.03803
					7000	22.4	19.32	58.53	0.2848	0.03808
				P 265 60R 18	5250	19.2	16.93	35.05	0.3053	0.03745
					5500	19.5	17.49	36.71	0.3123	0.03746
					6000	20.0	18.55	40.04	0.3265	0.03749
					6500	20.6	19.55	43.41	0.3408	0.03751
					7000	21.1	20.50	46.79	0.3552	0.03754
				P 275 55R 20 OWL & Bridgestone BSW	5250	19.9	16.34	43.33	0.2218	0.03788
					5500	20.2	16.85	45.39	0.2250	0.03791
					6000	20.8	17.84	49.52	0.2314	0.03796
					6500	21.4	18.77	53.68	0.2379	0.03802
					7000	22.0	19.64	57.85	0.2444	0.03807
				P 275 55R 20 BSW	5250	20.2	16.08	43.81	0.2691	0.03770
					5500	20.5	16.56	46.01	0.2750	0.03772
					6000	21.2	17.48	50.44	0.2870	0.03775
					6500	21.9	18.34	54.91	0.2992	0.03779
					7000	22.6	19.14	59.42	0.3114	0.03783
				P 265 70R 17	5250	19.8	16.42	38.79	0.2820	0.03820
					5500	20.1	16.95	40.55	0.2880	0.03825
					6000	20.7	17.97	44.08	0.2999	0.03833
					6500	21.2	18.93	47.62	0.3119	0.03842
					7000	21.8	19.84	51.16	0.3239	0.03851
				P 275 45R 22	5250	21.5	15.09	50.50	0.3388	0.03758
					5500	21.8	15.57	52.51	0.3464	0.03759
					6000	22.5	16.50	56.50	0.3615	0.03761
					6500	23.1	17.38	60.44	0.3764	0.03763
					7000	23.7	18.22	64.35	0.3911	0.03765
				P 275 65R 18	5250	19.0	17.11	35.19	0.2512	0.03789
					5500	19.3	17.66	36.94	0.2563	0.03792
					6000	19.8	18.72	40.47	0.2667	0.03797

ROADLOAD CERTIFICATION SPECIFICATIONS

2014 F150 5.0L/6.2L

Vehicle Description						Track Coefficients				
						3-Term		f0	f1	f2
Body	Eng	Trans	Drive	Tire	ETW	HP@50	55-45 CDT	lbf	lbf/mph	lbf/mph^2
					6500	20.4	19.72	44.03	0.2771	0.03803
					7000	21.0	20.65	47.63	0.2876	0.03809
F150 All CC	5.0L/6.2L	Auto	4x2	P 235 75R 17	5500	18.4	18.47	32.79	0.2830	0.03653
					6000	18.9	19.66	35.54	0.2938	0.03659
					6500	19.4	20.78	38.30	0.3046	0.03665
				P 255 65R 17	5500	19.6	17.38	40.14	0.3002	0.03669
					6000	20.1	18.42	43.57	0.3118	0.03677
					6500	20.7	19.41	47.01	0.3235	0.03686
				LT 275 65R 18	5500	21.7	15.65	56.41	0.2619	0.03738
					6000	22.5	16.51	61.11	0.2710	0.03750
					6500	23.2	17.33	65.78	0.2802	0.03762
				LT 245 75R 17	5500	20.2	16.86	46.94	0.2592	0.03655
					6000	20.8	17.87	50.82	0.2677	0.03660
					6500	21.4	18.82	54.68	0.2763	0.03666
				P 265 60R 18	5500	19.0	17.91	36.71	0.3123	0.03609
					6000	19.6	18.98	40.04	0.3265	0.03612
					6500	20.1	20.00	43.41	0.3408	0.03614
				P 275 55R 20 OWL & Bridgestone BSW	5500	19.7	17.24	45.39	0.2250	0.03654
					6000	20.3	18.24	49.52	0.2314	0.03659
					6500	21.0	19.18	53.68	0.2379	0.03664
				P 275 55R 20 BSW	5500	20.1	16.94	46.01	0.2750	0.03634
					6000	20.8	17.87	50.44	0.2870	0.03638
					6500	21.5	18.73	54.91	0.2992	0.03642
				P 265 70R 17	5500	19.6	17.35	40.55	0.2880	0.03687
					6000	20.2	18.38	44.08	0.2999	0.03696
					6500	20.8	19.35	47.62	0.3119	0.03705
				P 275 45R 22	5500	21.4	15.90	52.51	0.3464	0.03622
					6000	22.0	16.84	56.50	0.3615	0.03624
					6500	22.7	17.73	60.44	0.3764	0.03626
				P 275 65R 18	5500	18.8	18.09	36.94	0.2563	0.03654
					6000	19.4	19.16	40.47	0.2667	0.03660
					6500	19.9	20.17	44.03	0.2771	0.03666
F150 RCS	5.0L	Auto	4x4	P 235 75R 17	5250	19.9	16.35	32.25	0.3946	0.03886
					5500	20.1	16.93	33.62	0.4000	0.03889
					6000	20.6	18.05	36.38	0.4108	0.03895
					6500	21.0	19.13	39.14	0.4216	0.03901
					7000	21.5	20.15	41.90	0.4324	0.03907
				P 265 70R 17	5250	21.0	15.49	39.62	0.3952	0.03916
					5500	21.3	16.01	41.38	0.4012	0.03920
					6000	21.8	17.00	44.91	0.4131	0.03929
					6500	22.4	17.94	48.44	0.4251	0.03937
					7000	23.0	18.82	51.98	0.4371	0.03946
				LT 245 75R 17	5250	21.5	15.09	45.82	0.3688	0.03885
					5500	21.8	15.59	47.76	0.3731	0.03888
					6000	22.4	16.56	51.64	0.3816	0.03894
					6500	23.0	17.47	55.51	0.3902	0.03899
					7000	23.6	18.35	59.36	0.3986	0.03904
				P 275 65R 18	5250	20.2	16.12	36.01	0.3621	0.03882
					5500	20.4	16.66	37.76	0.3672	0.03885
					6000	21.0	17.69	41.29	0.3775	0.03891
					6500	21.6	18.66	44.85	0.3879	0.03896
					7000	22.1	19.57	48.45	0.3985	0.03902
				LT 275 65R 18	5250	23.0	14.13	54.87	0.3681	0.03962
					5500	23.3	14.57	57.23	0.3727	0.03968
					6000	24.1	15.41	61.92	0.3819	0.03981
					6500	24.8	16.20	66.60	0.3910	0.03993
					7000	25.5	16.95	71.25	0.4002	0.04005
				P 275 55R 20 OWL & Bridgestone BSW	5250	21.0	15.43	44.15	0.3334	0.03882
					5500	21.4	15.93	46.21	0.3366	0.03885
					6000	22.0	16.89	50.34	0.3431	0.03890
					6500	22.6	17.80	54.50	0.3496	0.03896
					7000	23.2	18.65	58.67	0.3561	0.03901
				P 275 55R 20 AT	5250	22.8	14.21	55.65	0.3719	0.03883
					5500	23.2	14.64	58.24	0.3769	0.03885
					6000	24.0	15.44	63.44	0.3871	0.03891

ROADLOAD CERTIFICATION SPECIFICATIONS

2014 F150 5.0L/6.2L

Vehicle Description						Track Coefficients				
						3-Term		f0	f1	f2
Body	Eng	Trans	Drive	Tire	ETW	HP@50	55-45 CDT	lbf	lbf/mph	lbf/mph^2
					6500	24.8	16.20	68.65	0.3973	0.03896
					7000	25.6	16.91	73.87	0.4075	0.03901
				P 275 55R 20 BSW	5250	21.4	15.20	44.63	0.3807	0.03864
					5500	21.7	15.67	46.83	0.3867	0.03866
					6000	22.4	16.57	51.26	0.3987	0.03869
					6500	23.1	17.41	55.73	0.4108	0.03873
					7000	23.8	18.20	60.24	0.4231	0.03877
				P 275 45R 22	5250	22.7	14.30	51.32	0.4513	0.03853
					5500	23.0	14.77	53.33	0.4589	0.03854
					6000	23.7	15.68	57.32	0.4740	0.03856
					6500	24.3	16.54	61.26	0.4889	0.03858
					7000	24.9	17.36	65.17	0.5036	0.03860
				P 255 65R 17	5250	21.0	15.45	39.27	0.4161	0.03905
					5500	21.3	15.97	40.99	0.4219	0.03909
					6000	21.9	16.97	44.42	0.4335	0.03917
					6500	22.4	17.92	47.86	0.4452	0.03926
					7000	23.0	18.82	51.30	0.4569	0.03934
F150 RCL	5.0L	Auto	4x4	P 235 75R 17	5250	20.1	16.18	32.25	0.3946	0.03948
					5500	20.3	16.76	33.62	0.4000	0.03951
					6000	20.8	17.87	36.38	0.4108	0.03957
					6500	21.2	18.94	39.14	0.4216	0.03963
					7000	21.7	19.96	41.90	0.4324	0.03969
				P 265 70R 17	5250	21.2	15.34	39.62	0.3952	0.03978
					5500	21.5	15.85	41.38	0.4012	0.03982
					6000	22.0	16.84	44.91	0.4131	0.03991
					6500	22.6	17.77	48.44	0.4251	0.03999
					7000	23.2	18.66	51.98	0.4371	0.04008
				LT 245 75R 17	5250	21.7	14.95	45.82	0.3688	0.03948
					5500	22.0	15.45	47.76	0.3731	0.03950
					6000	22.6	16.41	51.64	0.3816	0.03956
					6500	23.2	17.32	55.51	0.3902	0.03961
					7000	23.8	18.19	59.36	0.3986	0.03966
				P 275 65R 18	5250	20.4	15.96	36.01	0.3621	0.03944
					5500	20.6	16.49	37.76	0.3672	0.03947
					6000	21.2	17.51	41.29	0.3775	0.03953
					6500	21.8	18.48	44.85	0.3879	0.03958
					7000	22.3	19.39	48.45	0.3985	0.03964
				LT 275 65R 18	5250	23.2	14.00	54.87	0.3681	0.04024
					5500	23.5	14.44	57.23	0.3727	0.04030
					6000	24.3	15.28	61.92	0.3819	0.04043
					6500	25.0	16.07	66.60	0.3910	0.04055
					7000	25.7	16.81	71.25	0.4002	0.04067
				P 275 55R 20 OWL & Bridgestone BSW	5250	21.3	15.28	44.15	0.3334	0.03944
					5500	21.6	15.78	46.21	0.3366	0.03947
					6000	22.2	16.74	50.34	0.3431	0.03952
					6500	22.8	17.63	54.50	0.3496	0.03958
					7000	23.4	18.49	58.67	0.3561	0.03963
				P 275 55R 20 AT	5250	23.0	14.08	55.65	0.3719	0.03945
					5500	23.4	14.51	58.24	0.3769	0.03947
					6000	24.2	15.31	63.44	0.3871	0.03953
					6500	25.0	16.07	68.65	0.3973	0.03958
					7000	25.8	16.78	73.87	0.4075	0.03963
				P 275 55R 20 BSW	5250	21.6	15.05	44.63	0.3807	0.03926
					5500	21.9	15.52	46.83	0.3867	0.03928
					6000	22.6	16.42	51.26	0.3987	0.03931
					6500	23.3	17.26	55.73	0.4108	0.03935
					7000	24.0	18.04	60.24	0.4231	0.03939
				P 275 45R 22	5250	22.9	14.18	51.32	0.4513	0.03915
					5500	23.2	14.64	53.33	0.4589	0.03916
					6000	23.9	15.54	57.32	0.4740	0.03918
					6500	24.5	16.40	61.26	0.4889	0.03920
					7000	25.1	17.22	65.17	0.5036	0.03922
				P 255 65R 17	5250	21.2	15.30	39.27	0.4161	0.03967
					5500	21.5	15.82	40.99	0.4219	0.03971
					6000	22.1	16.81	44.42	0.4335	0.03979
					6500	22.6	17.76	47.86	0.4452	0.03988

ROADLOAD CERTIFICATION SPECIFICATIONS

2014 F150 5.0L/6.2L

Vehicle Description						Track Coefficients				
						3-Term		f0	f1	f2
Body	Eng	Trans	Drive	Tire	ETW	HP@50	55-45 CDT	lbf	lbf/mph	lbf/mph^2
					7000	23.2	18.66	51.30	0.4569	0.03996
F150 All SC except 163" WB	5.0L/6.2L	Auto	4x4	P 235 75R 17	5500	20.3	16.74	33.62	0.4000	0.03957
					6000	20.8	17.86	36.38	0.4108	0.03963
					6500	21.3	18.92	39.14	0.4216	0.03969
					7000	21.7	19.94	41.90	0.4324	0.03975
					7500	22.2	20.92	44.67	0.4432	0.03981
				P 265 70R 17	5500	21.5	15.84	41.38	0.4012	0.03988
					6000	22.1	16.82	44.91	0.4131	0.03997
					6500	22.6	17.76	48.44	0.4251	0.04005
					7000	23.2	18.64	51.98	0.4371	0.04014
					7500	23.8	19.48	55.53	0.4491	0.04023
				LT 245 75R 17	5500	22.0	15.43	47.76	0.3731	0.03956
					6000	22.6	16.39	51.64	0.3816	0.03961
					6500	23.2	17.30	55.51	0.3902	0.03967
					7000	23.8	18.17	59.36	0.3986	0.03972
					7500	24.4	19.00	63.20	0.4071	0.03977
				P 275 65R 18	5500	20.7	16.48	37.76	0.3672	0.03953
					6000	21.2	17.50	41.29	0.3775	0.03959
					6500	21.8	18.46	44.85	0.3879	0.03964
					7000	22.4	19.37	48.45	0.3985	0.03970
					7500	22.9	20.23	52.07	0.4091	0.03976
				LT 275 65R 18	5500	23.6	14.43	57.23	0.3727	0.04036
					6000	24.3	15.27	61.92	0.3819	0.04048
					6500	25.0	16.06	66.60	0.3910	0.04060
					7000	25.7	16.80	71.25	0.4002	0.04072
					7500	26.5	17.51	75.89	0.4092	0.04084
				P 275 55R 20 OWL & Bridgestone BSW	5500	21.6	15.76	46.21	0.3366	0.03953
					6000	22.2	16.72	50.34	0.3431	0.03958
					6500	22.8	17.62	54.50	0.3496	0.03964
					7000	23.4	18.47	58.67	0.3561	0.03969
					7500	24.0	19.28	62.85	0.3626	0.03974
				P 275 55R 20 AT	5500	23.5	14.50	58.24	0.3769	0.03953
					6000	24.2	15.30	63.44	0.3871	0.03959
					6500	25.0	16.06	68.65	0.3973	0.03964
					7000	25.8	16.77	73.87	0.4075	0.03969
					7500	26.6	17.43	79.10	0.4178	0.03974
				P 275 55R 20 BSW	5500	21.9	15.51	46.83	0.3867	0.03934
					6000	22.6	16.41	51.26	0.3987	0.03937
					6500	23.3	17.24	55.73	0.4108	0.03941
					7000	24.0	18.03	60.24	0.4231	0.03945
					7500	24.7	18.77	64.78	0.4354	0.03948
				P 275 45R 22	5500	23.2	14.63	53.33	0.4589	0.03922
					6000	23.9	15.53	57.32	0.4740	0.03924
					6500	24.5	16.39	61.26	0.4889	0.03926
					7000	25.1	17.21	65.17	0.5036	0.03928
					7500	25.8	17.99	69.04	0.5182	0.03930
				P 255 65R 17	5500	21.5	15.80	40.99	0.4219	0.03977
					6000	22.1	16.80	44.42	0.4335	0.03985
					6500	22.7	17.74	47.86	0.4452	0.03994
					7000	23.2	18.64	51.30	0.4569	0.04002
					7500	23.8	19.49	54.74	0.4685	0.04011
F150 SC w/163" WB	5.0L/6.2L	Auto	4x4	P 235 75R 17	5500	20.6	16.50	33.62	0.4000	0.04046
					6000	21.1	17.61	36.38	0.4108	0.04052
					6500	21.6	18.66	39.14	0.4216	0.04058
					7000	22.0	19.68	41.90	0.4324	0.04064
					7500	22.5	20.64	44.67	0.4432	0.04070
				P 265 70R 17	5500	21.8	15.63	41.38	0.4012	0.04077
					6000	22.4	16.60	44.91	0.4131	0.04086
					6500	22.9	17.53	48.44	0.4251	0.04095
					7000	23.5	18.41	51.98	0.4371	0.04103
					7500	24.1	19.24	55.53	0.4491	0.04112
				LT 245 75R 17	5500	22.3	15.23	47.76	0.3731	0.04045
					6000	22.9	16.18	51.64	0.3816	0.04051
					6500	23.5	17.09	55.51	0.3902	0.04056
					7000	24.1	17.95	59.36	0.3986	0.04061
					7500	24.7	18.77	63.20	0.4071	0.04067

ROADLOAD CERTIFICATION SPECIFICATIONS

2014 F150 5.0L/6.2L

Vehicle Description						Track Coefficients				
						3-Term		f0	f1	f2
Body	Eng	Trans	Drive	Tire	ETW	HP@50	55-45 CDT	lbf	lbf/mph	lbf/mph^2
				P 275 65R 18	5500	21.0	16.24	37.76	0.3672	0.04042
					6000	21.5	17.26	41.29	0.3775	0.04048
					6500	22.1	18.21	44.85	0.3879	0.04054
					7000	22.6	19.12	48.45	0.3985	0.04059
					7500	23.2	19.98	52.07	0.4091	0.04065
				LT 275 65R 18	5500	23.9	14.25	57.23	0.3727	0.04126
					6000	24.6	15.08	61.92	0.3819	0.04138
					6500	25.3	15.87	66.60	0.3910	0.04150
					7000	26.0	16.61	71.25	0.4002	0.04162
					7500	26.8	17.32	75.89	0.4092	0.04174
				P 275 55R 20 OWL & Bridgestone BSW	5500	21.9	15.55	46.21	0.3366	0.04042
					6000	22.5	16.50	50.34	0.3431	0.04048
					6500	23.1	17.39	54.50	0.3496	0.04053
					7000	23.7	18.24	58.67	0.3561	0.04058
					7500	24.3	19.04	62.85	0.3626	0.04064
				P 275 55R 20 AT	5500	23.8	14.31	58.24	0.3769	0.04043
					6000	24.5	15.12	63.44	0.3871	0.04048
					6500	25.3	15.87	68.65	0.3973	0.04053
					7000	26.1	16.58	73.87	0.4075	0.04058
					7500	26.9	17.24	79.10	0.4178	0.04064
				P 275 55R 20 BSW	5500	22.2	15.30	46.83	0.3867	0.04023
					6000	22.9	16.19	51.26	0.3987	0.04027
					6500	23.6	17.03	55.73	0.4108	0.04030
					7000	24.3	17.81	60.24	0.4231	0.04034
					7500	25.0	18.54	64.78	0.4354	0.04038
				P 275 45R 22	5500	23.5	14.45	53.33	0.4589	0.04011
					6000	24.2	15.34	57.32	0.4740	0.04013
					6500	24.8	16.19	61.26	0.4889	0.04015
					7000	25.4	17.01	65.17	0.5036	0.04017
					7500	26.1	17.79	69.04	0.5182	0.04019
				P 255 65R 17	5500	21.8	15.59	40.99	0.4219	0.04066
					6000	22.4	16.58	44.42	0.4335	0.04075
					6500	23.0	17.51	47.86	0.4452	0.04083
					7000	23.5	18.40	51.30	0.4569	0.04092
					7500	24.1	19.25	54.74	0.4685	0.04100
F150 All CC	5.0L/6.2L	Auto	4x4	P 235 75R 17	5500	20.0	16.99	33.62	0.4000	0.03867
					6000	20.5	18.12	36.38	0.4108	0.03873
					6500	21.0	19.19	39.14	0.4216	0.03879
					7000	21.4	20.22	41.90	0.4324	0.03885
					7500	21.9	21.21	44.67	0.4432	0.03891
				P 265 70R 17	5500	21.2	16.06	41.38	0.4012	0.03899
					6000	21.8	17.05	44.91	0.4131	0.03907
					6500	22.3	17.99	48.44	0.4251	0.03916
					7000	22.9	18.88	51.98	0.4371	0.03925
					7500	23.5	19.73	55.53	0.4491	0.03933
				LT 245 75R 17	5500	21.7	15.64	47.76	0.3731	0.03867
					6000	22.3	16.61	51.64	0.3816	0.03872
					6500	22.9	17.53	55.51	0.3902	0.03877
					7000	23.5	18.40	59.36	0.3986	0.03883
					7500	24.1	19.23	63.20	0.4071	0.03888
				P 275 65R 18	5500	20.4	16.72	37.76	0.3672	0.03864
					6000	20.9	17.75	41.29	0.3775	0.03869
					6500	21.5	18.72	44.85	0.3879	0.03875
					7000	22.1	19.63	48.45	0.3985	0.03881
					7500	22.6	20.50	52.07	0.4091	0.03887
				LT 275 65R 18	5500	23.3	14.61	57.23	0.3727	0.03947
					6000	24.0	15.45	61.92	0.3819	0.03959
					6500	24.7	16.25	66.60	0.3910	0.03971
					7000	25.4	17.00	71.25	0.4002	0.03983
					7500	26.2	17.71	75.89	0.4092	0.03995
				P 275 55R 20 OWL & Bridgestone BSW	5500	21.3	15.99	46.21	0.3366	0.03863
					6000	21.9	16.95	50.34	0.3431	0.03869
					6500	22.5	17.85	54.50	0.3496	0.03874
					7000	23.1	18.71	58.67	0.3561	0.03880
					7500	23.7	19.52	62.85	0.3626	0.03885
				P 275 55R 20 AT	5500	23.2	14.68	58.24	0.3769	0.03864

ROADLOAD CERTIFICATION SPECIFICATIONS

2014 F150 5.0L/6.2L

Vehicle Description						Track Coefficients				
						3-Term		f0	f1	f2
Body	Eng	Trans	Drive	Tire	ETW	HP@50	55-45 CDT	lbf	lbf/mph	lbf/mph^2
					6000	23.9	15.49	63.44	0.3871	0.03869
					6500	24.7	16.25	68.65	0.3973	0.03874
					7000	25.5	16.96	73.87	0.4075	0.03880
					7500	26.3	17.63	79.10	0.4178	0.03885
				P 275 55R 20 BSW	5500	21.6	15.72	46.83	0.3867	0.03844
					6000	22.3	16.62	51.26	0.3987	0.03848
					6500	23.0	17.46	55.73	0.4108	0.03852
					7000	23.7	18.25	60.24	0.4231	0.03855
					7500	24.4	18.99	64.78	0.4354	0.03859
				P 275 45R 22	5500	22.9	14.82	53.33	0.4589	0.03833
					6000	23.6	15.73	57.32	0.4740	0.03835
					6500	24.2	16.59	61.26	0.4889	0.03837
					7000	24.8	17.41	65.17	0.5036	0.03839
					7500	25.5	18.20	69.04	0.5182	0.03840
				P 255 65R 17	5500	21.2	16.02	40.99	0.4219	0.03888
					6000	21.8	17.03	44.42	0.4335	0.03896
					6500	22.4	17.98	47.86	0.4452	0.03904
					7000	22.9	18.88	51.30	0.4569	0.03913
					7500	23.5	19.74	54.74	0.4685	0.03921

ROADLOAD CERTIFICATION SPECIFICATIONS

2014 F150 Raptor

Vehicle Description						Track Coefficients				
						3-Term		f0	f1	f2
Body	Eng	Trans	Drive	Tire	ETW	HP@50	55-45 CDT	lbf	lbf/mph	lbf/mph^2
F150 Raptor	6.2L	All	4x4	LT 315 70R 17	6000	25.5	14.54	44.69	0.6198	0.04633
					6500	26.2	15.32	48.80	0.6430	0.04637
					7000	27.0	16.06	52.91	0.6662	0.04641

ED_002078G_00001322-00697

Vehicle Description						Track Coefficients				
						3-Term		f0	f1	f2
Body	Eng	Trans	Drive	Tire	ETW	HP@50	55-45 CDT	lbf	lbf/mph	lbf/mph^2
All F250/F350 SRW	6.2L	Auto	4x2	LT 245 75R 17 AS	6000	23.4	15.85	31.82	0.8687	0.04022
40.5 sq. ft.					6500	23.9	16.80	35.04	0.8791	0.04023
					7000	24.4	17.72	38.24	0.8894	0.04024
					7500	24.9	18.61	41.42	0.8997	0.04025
					8000	25.4	19.46	44.57	0.9099	0.04026
					8500	25.9	20.29	47.71	0.9200	0.04027
					9000	26.4	21.08	50.83	0.9300	0.04028
					9500	26.9	21.85	53.93	0.9400	0.04029
					10000	27.4	22.59	57.02	0.9500	0.04031
					10500	27.9	23.31	60.09	0.9599	0.04032
					11000	28.3	24.00	63.15	0.9697	0.04033
					11500	28.8	24.68	66.19	0.9795	0.04034
				LT 245 75R 17 AT	6000	23.9	15.54	34.79	0.8781	0.04023
					6500	24.4	16.46	38.25	0.8892	0.04024
					7000	25.0	17.34	41.67	0.9003	0.04025
					7500	25.5	18.19	45.08	0.9112	0.04026
					8000	26.0	19.01	48.46	0.9221	0.04027
					8500	26.6	19.79	51.82	0.9329	0.04029
					9000	27.1	20.55	55.16	0.9436	0.04030
					9500	27.6	21.28	58.48	0.9543	0.04031
					10000	28.1	21.99	61.79	0.9650	0.04032
					10500	28.6	22.67	65.08	0.9756	0.04033
					11000	29.1	23.33	68.36	0.9861	0.04035
					11500	29.6	23.97	71.62	0.9966	0.04036
				LT 265 70R 17 AT	6000	23.9	15.53	36.45	0.8177	0.04082
					6500	24.5	16.43	40.12	0.8246	0.04088
					7000	25.0	17.31	43.76	0.8316	0.04094
					7500	25.6	18.14	47.39	0.8384	0.04100
					8000	26.1	18.94	50.99	0.8453	0.04106
					8500	26.7	19.71	54.58	0.8521	0.04112
					9000	27.2	20.45	58.16	0.8589	0.04118
					9500	27.7	21.17	61.71	0.8656	0.04124
					10000	28.3	21.85	65.26	0.8724	0.04130
					10500	28.8	22.52	68.79	0.8791	0.04136
					11000	29.4	23.16	72.30	0.8857	0.04142
					11500	29.9	23.78	75.81	0.8924	0.04147
				LT 275 65R 18 AS	6000	24.3	15.30	41.83	0.7570	0.04094
					6500	24.8	16.18	45.82	0.7603	0.04101
					7000	25.4	17.03	49.79	0.7635	0.04108
					7500	26.0	17.84	53.72	0.7667	0.04115
					8000	26.6	18.62	57.64	0.7699	0.04122
					8500	27.1	19.38	61.52	0.7730	0.04129
					9000	27.7	20.10	65.39	0.7762	0.04136
					9500	28.2	20.79	69.24	0.7793	0.04143
					10000	28.8	21.46	73.06	0.7824	0.04150
					10500	29.3	22.11	76.87	0.7855	0.04157
					11000	29.9	22.74	80.66	0.7886	0.04163
					11500	30.4	23.34	84.43	0.7916	0.04170
F250 CC SRW Only	6.7L Diesel	Auto	4x2	LT 245 75R 17 AS	6000	23.0	16.16	32.80	0.8687	0.03844
40.5 sq. ft.					6500	23.5	17.13	36.02	0.8791	0.03845
					7000	24.0	18.06	39.22	0.8894	0.03846
					7500	24.5	18.95	42.40	0.8997	0.03848
					8000	25.0	19.82	45.56	0.9099	0.03849
					8500	25.5	20.65	48.70	0.9200	0.03850
					9000	25.9	21.45	51.82	0.9300	0.03851
					9500	26.4	22.22	54.92	0.9400	0.03852
					10000	26.9	22.97	58.01	0.9500	0.03853
					10500	27.4	23.70	61.08	0.9599	0.03854
					11000	27.9	24.40	64.14	0.9697	0.03855
					11500	28.3	25.08	67.18	0.9795	0.03856
				LT 245 75R 17 AT	6000	23.4	15.84	35.78	0.8781	0.03845
					6500	24.0	16.77	39.23	0.8892	0.03846
					7000	24.5	17.66	42.66	0.9003	0.03848
					7500	25.0	18.52	46.06	0.9112	0.03849
					8000	25.6	19.35	49.45	0.9221	0.03850
					8500	26.1	20.14	52.81	0.9329	0.03851
					9000	26.6	20.90	56.15	0.9436	0.03852
					9500	27.1	21.64	59.47	0.9543	0.03854
					10000	27.7	22.35	62.78	0.9650	0.03855
					10500	28.2	23.04	66.07	0.9756	0.03856
					11000	28.7	23.71	69.34	0.9861	0.03857
					11500	29.2	24.35	72.60	0.9966	0.03858
				LT 265 70R 17 AT	6000	23.5	15.83	37.43	0.8177	0.03905
					6500	24.0	16.75	41.10	0.8246	0.03911
					7000	24.6	17.63	44.74	0.8316	0.03917
					7500	25.1	18.47	48.37	0.8384	0.03923

Vehicle Description						Track Coefficients				
						3-Term		f0	f1	f2
Body	Eng	Trans	Drive	Tire	ETW	HP@50	55-45 CDT	lbf	lbf/mph	lbf/mph^2
					8000	25.7	19.28	51.98	0.8453	0.03929
					8500	26.2	20.06	55.56	0.8521	0.03935
					9000	26.7	20.80	59.14	0.8589	0.03941
					9500	27.3	21.52	62.70	0.8656	0.03947
					10000	27.8	22.21	66.24	0.8724	0.03953
					10500	28.4	22.88	69.77	0.8791	0.03958
					11000	28.9	23.53	73.29	0.8857	0.03964
					11500	29.4	24.15	76.79	0.8924	0.03970
				LT 275 65R 18 AS	6000	23.8	15.59	42.79	0.7570	0.03916
					6500	24.4	16.49	46.79	0.7603	0.03924
					7000	25.0	17.34	50.75	0.7635	0.03931
					7500	25.5	18.16	54.69	0.7667	0.03938
					8000	26.1	18.95	58.60	0.7699	0.03945
					8500	26.7	19.71	62.49	0.7730	0.03952
					9000	27.2	20.44	66.36	0.7762	0.03959
					9500	27.8	21.14	70.20	0.7793	0.03966
					10000	28.3	21.81	74.03	0.7824	0.03972
					10500	28.9	22.46	77.83	0.7855	0.03979
					11000	29.4	23.09	81.62	0.7886	0.03986
					11500	30.0	23.70	85.40	0.7916	0.03993
All F250/F350 SRW exc CC 40.5 sq. ft.	6.7L Diesel	Auto	4x2	LT 245 75R 17 AS	6000	23.4	15.87	32.80	0.8687	0.03972
					6500	23.9	16.83	36.02	0.8791	0.03973
					7000	24.4	17.75	39.22	0.8894	0.03975
					7500	24.9	18.63	42.40	0.8997	0.03976
					8000	25.4	19.48	45.56	0.9099	0.03977
					8500	25.9	20.31	48.70	0.9200	0.03978
					9000	26.4	21.10	51.82	0.9300	0.03979
					9500	26.9	21.87	54.92	0.9400	0.03980
					10000	27.3	22.62	58.01	0.9500	0.03981
					10500	27.8	23.34	61.08	0.9599	0.03982
					11000	28.3	24.03	64.14	0.9697	0.03983
					11500	28.8	24.71	67.18	0.9795	0.03985
				LT 245 75R 17 AT	6000	23.9	15.56	35.78	0.8781	0.03973
					6500	24.4	16.48	39.23	0.8892	0.03975
					7000	24.9	17.36	42.66	0.9003	0.03976
					7500	25.5	18.21	46.06	0.9112	0.03977
					8000	26.0	19.03	49.45	0.9221	0.03978
					8500	26.5	19.82	52.81	0.9329	0.03979
					9000	27.0	20.57	56.15	0.9436	0.03981
					9500	27.6	21.31	59.47	0.9543	0.03982
					10000	28.1	22.01	62.78	0.9650	0.03983
					10500	28.6	22.70	66.07	0.9756	0.03984
					11000	29.1	23.36	69.34	0.9861	0.03985
					11500	29.6	24.00	72.60	0.9966	0.03986
				LT 265 70R 17 AT	6000	23.9	15.55	37.43	0.8177	0.04033
					6500	24.4	16.46	41.10	0.8246	0.04039
					7000	25.0	17.33	44.74	0.8316	0.04045
					7500	25.5	18.16	48.37	0.8384	0.04051
					8000	26.1	18.96	51.98	0.8453	0.04057
					8500	26.6	19.74	55.56	0.8521	0.04063
					9000	27.2	20.48	59.14	0.8589	0.04069
					9500	27.7	21.19	62.70	0.8656	0.04075
					10000	28.3	21.88	66.24	0.8724	0.04081
					10500	28.8	22.54	69.77	0.8791	0.04087
					11000	29.3	23.19	73.29	0.8857	0.04092
					11500	29.8	23.81	76.79	0.8924	0.04098
				LT 275 65R 18 AS	6000	24.2	15.32	42.79	0.7570	0.04045
					6500	24.8	16.20	46.79	0.7603	0.04052
					7000	25.4	17.05	50.75	0.7635	0.04059
					7500	26.0	17.87	54.69	0.7667	0.04066
					8000	26.5	18.65	58.60	0.7699	0.04073
					8500	27.1	19.40	62.49	0.7730	0.04080
					9000	27.6	20.12	66.36	0.7762	0.04087
					9500	28.2	20.82	70.20	0.7793	0.04094
					10000	28.8	21.49	74.03	0.7824	0.04101
					10500	29.3	22.14	77.83	0.7855	0.04107
					11000	29.9	22.76	81.62	0.7886	0.04114
					11500	30.4	23.37	85.40	0.7916	0.04121
All F250/F350 SRW exc CC 51 sq.ft.	6.7L Diesel	Auto	4x2	LT 245 75R 17 AS	6000	26.9	13.79	32.80	0.8687	0.05033
					6500	27.4	14.66	36.02	0.8791	0.05035
					7000	27.9	15.51	39.22	0.8894	0.05036
					7500	28.4	16.32	42.40	0.8997	0.05037
					8000	28.9	17.11	45.56	0.9099	0.05038
					8500	29.4	17.88	48.70	0.9200	0.05039
					9000	29.9	18.62	51.82	0.9300	0.05040
					9500	30.4	19.34	54.92	0.9400	0.05041

Vehicle Description						Track Coefficients				
						3-Term		f0	f1	f2
Body	Eng	Trans	Drive	Tire	ETW	HP@50	55-45 CDT	lbf	lbf/mph	lbf/mph^2
					10000	30.9	20.04	58.01	0.9500	0.05042
					10500	31.4	20.71	61.08	0.9599	0.05044
					11000	31.8	21.37	64.14	0.9697	0.05045
					11500	32.3	22.01	67.18	0.9795	0.05046
				LT 245 75R 17 AT	6000	27.4	13.56	35.78	0.8781	0.05034
					6500	27.9	14.40	39.23	0.8892	0.05036
					7000	28.5	15.21	42.66	0.9003	0.05037
					7500	29.0	16.00	46.06	0.9112	0.05038
					8000	29.5	16.76	49.45	0.9221	0.05039
					8500	30.1	17.49	52.81	0.9329	0.05041
					9000	30.6	18.20	56.15	0.9436	0.05042
					9500	31.1	18.89	59.47	0.9543	0.05043
					10000	31.6	19.56	62.78	0.9650	0.05044
					10500	32.1	20.21	66.07	0.9756	0.05045
					11000	32.6	20.84	69.34	0.9861	0.05046
					11500	33.2	21.45	72.60	0.9966	0.05048
				LT 265 70R 17 AT	6000	27.4	13.55	37.43	0.8177	0.05094
					6500	28.0	14.38	41.10	0.8246	0.05100
					7000	28.5	15.19	44.74	0.8316	0.05106
					7500	29.1	15.96	48.37	0.8384	0.05112
					8000	29.6	16.71	51.98	0.8453	0.05118
					8500	30.2	17.43	55.56	0.8521	0.05124
					9000	30.7	18.13	59.14	0.8589	0.05130
					9500	31.3	18.80	62.70	0.8656	0.05136
					10000	31.8	19.45	66.24	0.8724	0.05142
					10500	32.3	20.09	69.77	0.8791	0.05148
					11000	32.9	20.70	73.29	0.8857	0.05154
					11500	33.4	21.30	76.79	0.8924	0.05159
				LT 275 65R 18 AS	6000	27.8	13.37	42.79	0.7570	0.05106
					6500	28.4	14.19	46.79	0.7603	0.05113
					7000	28.9	14.98	50.75	0.7635	0.05120
					7500	29.5	15.73	54.69	0.7667	0.05127
					8000	30.1	16.46	58.60	0.7699	0.05134
					8500	30.6	17.17	62.49	0.7730	0.05141
					9000	31.2	17.85	66.36	0.7762	0.05148
					9500	31.7	18.51	70.20	0.7793	0.05155
					10000	32.3	19.15	74.03	0.7824	0.05162
					10500	32.8	19.76	77.83	0.7855	0.05169
					11000	33.4	20.36	81.62	0.7886	0.05175
					11500	33.9	20.94	85.40	0.7916	0.05182
All F350 DRW	6.2L	Auto	4x2	LT 245 75R 17 AS	6000	24.7	15.02	33.91	0.8723	0.04318
40.5 sq. ft.					6500	25.2	15.94	37.22	0.8830	0.04319
					7000	25.8	16.82	40.50	0.8936	0.04320
					7500	26.3	17.67	43.77	0.9041	0.04321
					8000	26.8	18.49	47.01	0.9145	0.04322
					8500	27.3	19.28	50.23	0.9249	0.04323
					9000	27.8	20.04	53.43	0.9352	0.04325
					9500	28.3	20.78	56.61	0.9455	0.04326
					10000	28.8	21.50	59.78	0.9557	0.04327
					10500	29.3	22.19	62.94	0.9658	0.04328
					11000	29.7	22.86	66.08	0.9760	0.04329
					11500	30.2	23.51	69.20	0.9860	0.04330
All F350 DRW	6.7L Diesel	Auto	4x2	LT 245 75R 17 AS	6000	25.0	14.84	34.90	0.8723	0.04367
40.5 sq. ft.					6500	25.5	15.75	38.21	0.8830	0.04368
					7000	26.1	16.63	41.49	0.8936	0.04369
					7500	26.6	17.47	44.75	0.9041	0.04370
					8000	27.1	18.28	47.99	0.9145	0.04372
					8500	27.6	19.07	51.21	0.9249	0.04373
					9000	28.1	19.83	54.42	0.9352	0.04374
					9500	28.6	20.57	57.60	0.9455	0.04375
					10000	29.1	21.28	60.77	0.9557	0.04376
					10500	29.6	21.97	63.92	0.9658	0.04377
					11000	30.0	22.64	67.06	0.9760	0.04378
					11500	30.5	23.28	70.19	0.9860	0.04380
All F350 DRW	6.7L Diesel	Auto	4x2	LT 245 75R 17 AS	7500	30.4	15.25	44.75	0.9041	0.05534
51 sq.ft.					8000	30.9	16.00	47.99	0.9145	0.05535
					8500	31.4	16.73	51.21	0.9249	0.05536
					9000	32.0	17.43	54.42	0.9352	0.05538
					9500	32.4	18.12	57.60	0.9455	0.05539
					10000	32.9	18.78	60.77	0.9557	0.05540
					10500	33.4	19.43	63.92	0.9658	0.05541
					11000	33.9	20.06	67.06	0.9760	0.05542
					11500	34.4	20.67	70.19	0.9860	0.05543
					12000	34.9	21.27	73.30	0.9960	0.05544
					12500	35.4	21.85	76.40	1.0060	0.05545
					13000	35.9	22.41	79.48	1.0160	0.05547

Vehicle Description						Track Coefficients				
						3-Term		f0	f1	f2
Body	Eng	Trans	Drive	Tire	ETW	HP@50	55-45 CDT	lbf	lbf/mph	lbf/mph^2
All F250/F350 SRW 40.5 sq. ft.	6.2L	Auto	4x4	LT 245 75R 17 AS	6500	26.0	15.46	23.75	1.7783	0.03299
					7000	26.5	16.34	26.88	1.7884	0.03300
					7500	27.0	17.19	29.98	1.7984	0.03301
					8000	27.5	18.01	33.07	1.8084	0.03302
					8500	28.0	18.81	36.14	1.8183	0.03303
					9000	28.4	19.58	39.19	1.8281	0.03304
					9500	28.9	20.33	42.22	1.8379	0.03305
					10000	29.4	21.05	45.24	1.8476	0.03306
					10500	29.8	21.76	48.25	1.8573	0.03307
					11000	30.3	22.44	51.24	1.8669	0.03309
					11500	30.8	23.10	54.21	1.8765	0.03310
					12000	31.2	23.75	57.18	1.8860	0.03311
				LT 245 75R 17 AT	6500	26.5	15.17	26.88	1.7882	0.03300
					7000	27.0	16.02	30.24	1.7990	0.03301
					7500	27.5	16.84	33.56	1.8097	0.03302
					8000	28.1	17.63	36.87	1.8203	0.03303
					8500	28.6	18.39	40.16	1.8309	0.03305
					9000	29.1	19.13	43.42	1.8414	0.03306
					9500	29.6	19.85	46.67	1.8519	0.03307
					10000	30.1	20.54	49.91	1.8623	0.03308
					10500	30.6	21.21	53.13	1.8726	0.03309
					11000	31.1	21.86	56.33	1.8829	0.03310
					11500	31.6	22.50	59.52	1.8932	0.03311
					12000	32.1	23.11	62.69	1.9034	0.03313
				LT 265 70R 17 AT	6500	26.5	15.16	28.64	1.7158	0.03379
					7000	27.1	16.00	32.20	1.7225	0.03385
					7500	27.6	16.81	35.74	1.7292	0.03391
					8000	28.1	17.59	39.26	1.7359	0.03397
					8500	28.7	18.34	42.76	1.7426	0.03402
					9000	29.2	19.07	46.25	1.7492	0.03408
					9500	29.7	19.77	49.72	1.7558	0.03414
					10000	30.2	20.44	53.18	1.7623	0.03420
					10500	30.8	21.10	56.62	1.7689	0.03425
					11000	31.3	21.73	60.06	1.7754	0.03431
					11500	31.8	22.35	63.48	1.7819	0.03437
					12000	32.3	22.95	66.89	1.7884	0.03442
				LT 275 65R 18 AS	6500	27.0	14.88	35.23	1.6237	0.03447
					7000	27.6	15.70	39.16	1.6269	0.03454
					7500	28.1	16.48	43.07	1.6300	0.03461
					8000	28.7	17.23	46.95	1.6332	0.03468
					8500	29.3	17.96	50.81	1.6363	0.03474
					9000	29.8	18.66	54.65	1.6394	0.03481
					9500	30.4	19.33	58.46	1.6425	0.03488
					10000	30.9	19.99	62.26	1.6456	0.03495
					10500	31.5	20.62	66.03	1.6487	0.03502
					11000	32.0	21.23	69.79	1.6518	0.03508
					11500	32.6	21.83	73.53	1.6548	0.03515
					12000	33.1	22.40	77.26	1.6578	0.03522
				LT 275 70R 18 AT	6500	27.9	14.39	37.86	1.6963	0.03475
					7000	28.6	15.14	41.97	1.7114	0.03476
					7500	29.2	15.86	46.06	1.7264	0.03478
					8000	29.9	16.55	50.12	1.7413	0.03480
					8500	30.5	17.21	54.16	1.7562	0.03481
					9000	31.2	17.85	58.17	1.7709	0.03483
					9500	31.8	18.46	62.17	1.7856	0.03485
					10000	32.4	19.05	66.14	1.8002	0.03486
					10500	33.1	19.62	70.09	1.8147	0.03488
					11000	33.7	20.17	74.03	1.8292	0.03490
					11500	34.3	20.70	77.95	1.8436	0.03491
					12000	34.9	21.21	81.85	1.8579	0.03493
				LT 275 65R 20 AT	6500	27.5	14.59	38.55	1.5029	0.03717
					7000	28.2	15.34	42.85	1.5097	0.03731
					7500	28.9	16.06	47.13	1.5165	0.03745
					8000	29.5	16.75	51.39	1.5233	0.03759
					8500	30.2	17.40	55.63	1.5301	0.03773
					9000	30.9	18.03	59.86	1.5369	0.03787
					9500	31.5	18.64	64.07	1.5436	0.03800
					10000	32.2	19.22	68.27	1.5503	0.03814
					10500	32.8	19.78	72.45	1.5569	0.03827
					11000	33.4	20.32	76.63	1.5636	0.03841
					11500	34.1	20.84	80.78	1.5702	0.03854
					12000	34.7	21.35	84.93	1.5768	0.03868
All F250/F350 SRW 40.5 sq. ft.	6.7L Diesel	Auto	4x4	LT 245 75R 17 AS	6500	25.9	15.54	24.73	1.7783	0.03220
					7000	26.4	16.42	27.86	1.7884	0.03221
					7500	26.9	17.27	30.97	1.7984	0.03222

Vehicle Description						Track Coefficients				
						3-Term		f0	f1	f2
Body	Eng	Trans	Drive	Tire	ETW	HP@50	55-45 CDT	lbf	lbf/mph	lbf/mph^2
					8000	27.3	18.10	34.06	1.8084	0.03223
					8500	27.8	18.90	37.12	1.8183	0.03224
					9000	28.3	19.67	40.17	1.8281	0.03225
					9500	28.8	20.42	43.21	1.8379	0.03226
					10000	29.2	21.14	46.23	1.8476	0.03228
					10500	29.7	21.85	49.23	1.8573	0.03229
					11000	30.2	22.53	52.22	1.8669	0.03230
					11500	30.6	23.20	55.20	1.8765	0.03231
					12000	31.1	23.85	58.16	1.8860	0.03232
				LT 245 75R 17 AT	6500	26.4	15.25	27.87	1.7882	0.03221
					7000	26.9	16.10	31.22	1.7990	0.03222
					7500	27.4	16.92	34.55	1.8097	0.03223
					8000	27.9	17.71	37.86	1.8203	0.03225
					8500	28.4	18.48	41.14	1.8309	0.03226
					9000	29.0	19.22	44.41	1.8414	0.03227
					9500	29.5	19.94	47.66	1.8519	0.03228
					10000	30.0	20.63	50.89	1.8623	0.03229
					10500	30.5	21.30	54.11	1.8726	0.03230
					11000	31.0	21.96	57.31	1.8829	0.03231
					11500	31.5	22.59	60.50	1.8932	0.03233
					12000	32.0	23.20	63.68	1.9034	0.03234
				LT 265 70R 17 AT	6500	26.4	15.24	29.63	1.7158	0.03300
					7000	26.9	16.08	33.18	1.7225	0.03306
					7500	27.5	16.89	36.72	1.7292	0.03312
					8000	28.0	17.67	40.24	1.7359	0.03318
					8500	28.5	18.42	43.74	1.7426	0.03324
					9000	29.1	19.15	47.23	1.7492	0.03329
					9500	29.6	19.85	50.70	1.7558	0.03335
					10000	30.1	20.53	54.16	1.7623	0.03341
					10500	30.6	21.19	57.61	1.7689	0.03347
					11000	31.1	21.83	61.04	1.7754	0.03352
					11500	31.7	22.44	64.46	1.7819	0.03358
					12000	32.2	23.04	67.87	1.7884	0.03364
				LT 275 65R 18 AS	6500	26.9	14.96	36.20	1.6237	0.03368
					7000	27.4	15.77	40.13	1.6269	0.03375
					7500	28.0	16.56	44.04	1.6300	0.03382
					8000	28.6	17.31	47.92	1.6332	0.03389
					8500	29.1	18.04	51.78	1.6363	0.03396
					9000	29.7	18.74	55.61	1.6394	0.03402
					9500	30.2	19.42	59.43	1.6425	0.03409
					10000	30.8	20.07	63.22	1.6456	0.03416
					10500	31.3	20.71	67.00	1.6487	0.03423
					11000	31.9	21.32	70.76	1.6518	0.03430
					11500	32.4	21.92	74.50	1.6548	0.03436
					12000	33.0	22.49	78.23	1.6578	0.03443
				LT 275 70R 18 AT	6500	27.8	14.46	38.79	1.6963	0.03396
					7000	28.5	15.21	42.91	1.7114	0.03397
					7500	29.1	15.93	47.00	1.7264	0.03399
					8000	29.8	16.62	51.06	1.7413	0.03401
					8500	30.4	17.28	55.10	1.7562	0.03403
					9000	31.0	17.92	59.11	1.7709	0.03404
					9500	31.7	18.54	63.10	1.7856	0.03406
					10000	32.3	19.13	67.08	1.8002	0.03408
					10500	32.9	19.70	71.03	1.8147	0.03409
					11000	33.6	20.25	74.96	1.8292	0.03411
					11500	34.2	20.78	78.88	1.8436	0.03413
					12000	34.8	21.30	82.79	1.8579	0.03414
				LT 275 65R 20 AT	6500	27.4	14.67	39.46	1.5029	0.03639
					7000	28.1	15.42	43.76	1.5097	0.03653
					7500	28.7	16.14	48.04	1.5165	0.03666
					8000	29.4	16.83	52.30	1.5233	0.03680
					8500	30.1	17.48	56.54	1.5301	0.03694
					9000	30.7	18.11	60.77	1.5369	0.03708
					9500	31.4	18.72	64.98	1.5436	0.03721
					10000	32.0	19.31	69.18	1.5503	0.03735
					10500	32.7	19.87	73.37	1.5569	0.03749
					11000	33.3	20.41	77.54	1.5636	0.03762
					11500	33.9	20.93	81.70	1.5702	0.03776
					12000	34.6	21.43	85.84	1.5768	0.03789
All F250/F350 SRW	6.7L Diesel	Auto	4x4	LT 245 75R 17 AS	6500	29.6	13.61	24.73	1.7783	0.04325
51 sq. ft.					7000	30.1	14.42	27.86	1.7884	0.04326
					7500	30.5	15.20	30.97	1.7984	0.04327
					8000	31.0	15.96	34.06	1.8084	0.04328
					8500	31.5	16.70	37.12	1.8183	0.04329
					9000	32.0	17.41	40.17	1.8281	0.04330
					9500	32.5	18.11	43.21	1.8379	0.04331

Vehicle Description						Track Coefficients				
						3-Term		f0	f1	f2
Body	Eng	Trans	Drive	Tire	ETW	HP@50	55-45 CDT	lbf	lbf/mph	lbf/mph^2
					10000	32.9	18.79	46.23	1.8476	0.04332
					10500	33.4	19.45	49.23	1.8573	0.04333
					11000	33.9	20.09	52.22	1.8669	0.04334
					11500	34.3	20.72	55.20	1.8765	0.04336
					12000	34.8	21.33	58.16	1.8860	0.04337
				LT 245 75R 17 AT	6500	30.1	13.39	27.87	1.7882	0.04326
					7000	30.6	14.17	31.22	1.7990	0.04327
					7500	31.1	14.92	34.55	1.8097	0.04328
					8000	31.6	15.66	37.86	1.8203	0.04329
					8500	32.1	16.37	41.14	1.8309	0.04330
					9000	32.6	17.06	44.41	1.8414	0.04332
					9500	33.1	17.73	47.66	1.8519	0.04333
					10000	33.6	18.38	50.89	1.8623	0.04334
					10500	34.1	19.02	54.11	1.8726	0.04335
					11000	34.6	19.63	57.31	1.8829	0.04336
					11500	35.1	20.23	60.50	1.8932	0.04337
					12000	35.6	20.81	63.68	1.9034	0.04339
				LT 265 70R 17 AT	6500	30.1	13.38	29.63	1.7158	0.04405
					7000	30.6	14.15	33.18	1.7225	0.04411
					7500	31.1	14.90	36.72	1.7292	0.04417
					8000	31.7	15.62	40.24	1.7359	0.04423
					8500	32.2	16.33	43.74	1.7426	0.04428
					9000	32.7	17.01	47.23	1.7492	0.04434
					9500	33.3	17.66	50.70	1.7558	0.04440
					10000	33.8	18.30	54.16	1.7623	0.04446
					10500	34.3	18.92	57.61	1.7689	0.04451
					11000	34.8	19.53	61.04	1.7754	0.04457
					11500	35.4	20.11	64.46	1.7819	0.04463
					12000	35.9	20.68	67.87	1.7884	0.04468
				LT 275 65R 18 AS	6500	30.6	13.16	36.20	1.6237	0.04472
					7000	31.1	13.91	40.13	1.6269	0.04479
					7500	31.7	14.64	44.04	1.6300	0.04486
					8000	32.3	15.34	47.92	1.6332	0.04493
					8500	32.8	16.02	51.78	1.6363	0.04500
					9000	33.4	16.68	55.61	1.6394	0.04507
					9500	33.9	17.32	59.43	1.6425	0.04514
					10000	34.5	17.94	63.22	1.6456	0.04521
					10500	35.0	18.54	67.00	1.6487	0.04528
					11000	35.6	19.12	70.76	1.6518	0.04534
					11500	36.1	19.69	74.50	1.6548	0.04541
					12000	36.6	20.24	78.23	1.6578	0.04548
				LT 275 70R 18 AT	6500	31.5	12.77	38.79	1.6963	0.04501
					7000	32.1	13.48	42.91	1.7114	0.04502
					7500	32.8	14.15	47.00	1.7264	0.04504
					8000	33.4	14.80	51.06	1.7413	0.04506
					8500	34.1	15.42	55.10	1.7562	0.04507
					9000	34.7	16.03	59.11	1.7709	0.04509
					9500	35.4	16.61	63.10	1.7856	0.04511
					10000	36.0	17.18	67.08	1.8002	0.04512
					10500	36.6	17.73	71.03	1.8147	0.04514
					11000	37.2	18.26	74.96	1.8292	0.04516
					11500	37.9	18.77	78.88	1.8436	0.04517
					12000	38.5	19.27	82.79	1.8579	0.04519
				LT 275 65R 20 AT	6500	31.1	12.94	39.46	1.5029	0.04743
					7000	31.8	13.64	43.76	1.5097	0.04757
					7500	32.4	14.31	48.04	1.5165	0.04771
					8000	33.1	14.96	52.30	1.5233	0.04785
					8500	33.7	15.58	56.54	1.5301	0.04799
					9000	34.4	16.18	60.77	1.5369	0.04813
					9500	35.0	16.76	64.98	1.5436	0.04826
					10000	35.7	17.32	69.18	1.5503	0.04840
					10500	36.3	17.86	73.37	1.5569	0.04853
					11000	37.0	18.38	77.54	1.5636	0.04867
					11500	37.6	18.89	81.70	1.5702	0.04880
					12000	38.3	19.38	85.84	1.5768	0.04894
All F350 DRW	6.2L	Auto	4x4	LT 245 75R 17 AS	6500	27.3	14.72	25.93	1.7822	0.03595
40.5 sq. ft.					7000	27.8	15.57	29.14	1.7925	0.03596
					7500	28.3	16.39	32.33	1.8028	0.03597
					8000	28.8	17.18	35.50	1.8130	0.03598
					8500	29.3	17.94	38.65	1.8232	0.03599
					9000	29.8	18.68	41.79	1.8333	0.03600
					9500	30.3	19.40	44.90	1.8433	0.03602
					10000	30.8	20.10	48.00	1.8533	0.03603
					10500	31.2	20.78	51.09	1.8633	0.03604
					11000	31.7	21.44	54.16	1.8732	0.03605
					11500	32.2	22.08	57.22	1.8830	0.03606

Vehicle Description						Track Coefficients				
						3-Term		f0	f1	f2
Body	Eng	Trans	Drive	Tire	ETW	HP@50	55-45 CDT	lbf	lbf/mph	lbf/mph^2
					12000	32.7	22.70	60.26	1.8928	0.03607
				LT 245 75R 17 AT	6500	27.8	14.46	29.15	1.7923	0.03596
					7000	28.4	15.27	32.59	1.8034	0.03597
					7500	28.9	16.06	36.01	1.8144	0.03598
					8000	29.4	16.82	39.41	1.8253	0.03600
					8500	29.9	17.55	42.78	1.8362	0.03601
					9000	30.5	18.26	46.14	1.8470	0.03602
					9500	31.0	18.95	49.48	1.8577	0.03603
					10000	31.5	19.62	52.80	1.8684	0.03604
					10500	32.0	20.27	56.10	1.8790	0.03606
					11000	32.5	20.90	59.39	1.8896	0.03607
					11500	33.1	21.51	62.67	1.9002	0.03608
					12000	33.6	22.10	65.93	1.9106	0.03609
All F350/450 DRW 40.5 sq. ft.	6.7L Diesel	Auto	4x4	LT 245 75R 17 AS	7000	28.1	15.40	30.13	1.7925	0.03645
					7500	28.6	16.22	33.32	1.8028	0.03646
					8000	29.1	17.00	36.49	1.8130	0.03647
					8500	29.6	17.76	39.64	1.8232	0.03649
					9000	30.1	18.50	42.77	1.8333	0.03650
					9500	30.6	19.21	45.89	1.8433	0.03651
					10000	31.1	19.91	48.99	1.8533	0.03652
					10500	31.5	20.58	52.08	1.8633	0.03653
					11000	32.0	21.24	55.15	1.8732	0.03654
					11500	32.5	21.88	58.21	1.8830	0.03655
					12000	33.0	22.50	61.25	1.8928	0.03656
					12500	33.4	23.10	64.28	1.9026	0.03657
				LT 245 75R 17 AT	7000	28.7	15.11	33.58	1.8034	0.03646
					7500	29.2	15.89	37.00	1.8144	0.03648
					8000	29.7	16.65	40.39	1.8253	0.03649
					8500	30.2	17.38	43.77	1.8362	0.03650
					9000	30.8	18.09	47.12	1.8470	0.03651
					9500	31.3	18.77	50.46	1.8577	0.03652
					10000	31.8	19.44	53.78	1.8684	0.03654
					10500	32.3	20.08	57.09	1.8790	0.03655
					11000	32.8	20.71	60.38	1.8896	0.03656
					11500	33.3	21.32	63.65	1.9002	0.03657
					12000	33.9	21.91	66.91	1.9106	0.03658
					12500	34.4	22.48	70.16	1.9211	0.03660
All F350/450 DRW 51 sq. ft.	6.7L Diesel	Auto	4x4	LT 245 75R 17 AS	7000	32.2	13.47	30.13	1.7925	0.04860
					7500	32.7	14.21	33.32	1.8028	0.04861
					8000	33.2	14.93	36.49	1.8130	0.04862
					8500	33.7	15.63	39.64	1.8232	0.04864
					9000	34.1	16.31	42.77	1.8333	0.04865
					9500	34.6	16.97	45.89	1.8433	0.04866
					10000	35.1	17.62	48.99	1.8533	0.04867
					10500	35.6	18.25	52.08	1.8633	0.04868
					11000	36.1	18.86	55.15	1.8732	0.04869
					11500	36.5	19.46	58.21	1.8830	0.04870
					12000	37.0	20.05	61.25	1.8928	0.04871
					12500	37.5	20.62	64.28	1.9026	0.04872
				LT 245 75R 17 AT	7000	32.7	13.25	33.58	1.8034	0.04861
					7500	33.2	13.96	37.00	1.8144	0.04863
					8000	33.8	14.66	40.39	1.8253	0.04864
					8500	34.3	15.34	43.77	1.8362	0.04865
					9000	34.8	15.99	47.12	1.8470	0.04866
					9500	35.3	16.63	50.46	1.8577	0.04867
					10000	35.9	17.25	53.78	1.8684	0.04869
					10500	36.4	17.85	57.09	1.8790	0.04870
					11000	36.9	18.44	60.38	1.8896	0.04871
					11500	37.4	19.02	63.65	1.9002	0.04872
					12000	37.9	19.58	66.91	1.9106	0.04873
					12500	38.4	20.12	70.16	1.9211	0.04875

Vehicle Description						Track Coefficients				
						3-Term		f0	f1	f2
Body	Eng	Trans	Drive	Tire	ETW	HP@50	55-45 CDT	lbf	lbf/mph	lbf/mph^2
F250/F350 SRW	6.2L	Auto	4x2	LT 245 75R 17 AS	8000	50.2	9.88	44.57	0.9099	0.11468
Incomplete					8500	50.7	10.39	47.71	0.9200	0.11469
72 sq. ft.					9000	51.2	10.90	50.83	0.9300	0.11470
					9500	51.7	11.39	53.93	0.9400	0.11471
					10000	52.2	11.88	57.02	0.9500	0.11473
					10500	52.7	12.36	60.09	0.9599	0.11474
					11000	53.1	12.83	63.15	0.9697	0.11475
					11500	53.6	13.29	66.19	0.9795	0.11476
					12000	54.1	13.75	69.23	0.9893	0.11477
					12500	54.6	14.20	72.24	0.9990	0.11478
					13000	55.0	14.64	75.25	1.0087	0.11479
					13500	55.5	15.07	78.25	1.0183	0.11480
				LT 265 70R 17 AT	8000	50.9	9.74	50.99	0.8453	0.11548
					8500	51.5	10.24	54.58	0.8521	0.11554
					9000	52.0	10.73	58.16	0.8589	0.11560
					9500	52.6	11.20	61.71	0.8656	0.11566
					10000	53.1	11.67	65.26	0.8724	0.11572
					10500	53.6	12.13	68.79	0.8791	0.11578
					11000	54.2	12.58	72.30	0.8857	0.11584
					11500	54.7	13.03	75.81	0.8924	0.11589
					12000	55.2	13.46	79.30	0.8990	0.11595
					12500	55.7	13.89	82.79	0.9056	0.11601
					13000	56.3	14.31	86.26	0.9122	0.11607
					13500	56.8	14.72	89.72	0.9188	0.11613
				LT 275 65R 18 AS	8000	51.4	9.65	57.64	0.7699	0.11564
					8500	51.9	10.15	61.52	0.7730	0.11571
					9000	52.5	10.63	65.39	0.7762	0.11578
					9500	53.0	11.10	69.24	0.7793	0.11585
					10000	53.6	11.56	73.06	0.7824	0.11592
					10500	54.1	12.01	76.87	0.7855	0.11599
					11000	54.7	12.46	80.66	0.7886	0.11605
					11500	55.2	12.89	84.43	0.7916	0.11612
					12000	55.8	13.32	88.18	0.7947	0.11619
					12500	56.3	13.74	91.92	0.7977	0.11626
					13000	56.9	14.16	95.65	0.8008	0.11632
					13500	57.4	14.56	99.36	0.8038	0.11639
F250/F350 SRW	6.7L Diesel	Auto	4x2	LT 245 75R 17 AS	8000	50.4	9.85	45.56	0.9099	0.11468
Incomplete					8500	50.9	10.36	48.70	0.9200	0.11469
72 sq. ft.					9000	51.3	10.87	51.82	0.9300	0.11470
					9500	51.8	11.36	54.92	0.9400	0.11471
					10000	52.3	11.85	58.01	0.9500	0.11473
					10500	52.8	12.33	61.08	0.9599	0.11474
					11000	53.3	12.80	64.14	0.9697	0.11475
					11500	53.7	13.26	67.18	0.9795	0.11476
					12000	54.2	13.71	70.21	0.9893	0.11477
					12500	54.7	14.16	73.23	0.9990	0.11478
					13000	55.2	14.60	76.24	1.0087	0.11479
					13500	55.6	15.03	79.23	1.0183	0.11480
				LT 265 70R 17 AT	8000	51.1	9.71	51.98	0.8453	0.11548
					8500	51.6	10.21	55.56	0.8521	0.11554
					9000	52.1	10.70	59.14	0.8589	0.11560
					9500	52.7	11.18	62.70	0.8656	0.11566
					10000	53.2	11.64	66.24	0.8724	0.11572
					10500	53.8	12.10	69.77	0.8791	0.11578
					11000	54.3	12.55	73.29	0.8857	0.11584
					11500	54.8	13.00	76.79	0.8924	0.11589
					12000	55.3	13.43	80.28	0.8990	0.11595
					12500	55.9	13.86	83.77	0.9056	0.11601
					13000	56.4	14.27	87.24	0.9122	0.11607
					13500	56.9	14.68	90.70	0.9188	0.11613
				LT 275 65R 18 AS	8000	51.5	9.63	58.60	0.7699	0.11564
					8500	52.1	10.12	62.49	0.7730	0.11571
					9000	52.6	10.60	66.36	0.7762	0.11578
					9500	53.2	11.07	70.20	0.7793	0.11585
					10000	53.7	11.53	74.03	0.7824	0.11592
					10500	54.3	11.98	77.83	0.7855	0.11599
					11000	54.8	12.43	81.62	0.7886	0.11605
					11500	55.4	12.86	85.40	0.7916	0.11612
					12000	55.9	13.29	89.15	0.7947	0.11619
					12500	56.5	13.71	92.89	0.7977	0.11626

Vehicle Description						Track Coefficients				
						3-Term		f0	f1	f2
Body	Eng	Trans	Drive	Tire	ETW	HP@50	55-45 CDT	lbf	lbf/mph	lbf/mph^2
					13000	57.0	14.12	96.62	0.8008	0.11632
					13500	57.5	14.53	100.33	0.8038	0.11639
F350 DRW	6.2L	Auto	4x2	LT 245 75R 17 AS	8000	50.6	9.80	47.01	0.9145	0.11469
Incomplete					8500	51.1	10.31	50.23	0.9249	0.11470
72 sq. ft.					9000	51.6	10.81	53.43	0.9352	0.11471
					9500	52.1	11.30	56.61	0.9455	0.11472
					10000	52.6	11.79	59.78	0.9557	0.11473
					10500	53.1	12.26	62.94	0.9658	0.11474
					11000	53.6	12.72	66.08	0.9760	0.11475
					11500	54.1	13.18	69.20	0.9860	0.11477
					12000	54.5	13.63	72.31	0.9960	0.11478
					12500	55.0	14.07	75.41	1.0060	0.11479
					13000	55.5	14.51	78.50	1.0160	0.11480
					13500	56.0	14.94	81.57	1.0259	0.11481
F350/F450 DRW	6.7L Diesel	Auto	4x2	LT 245 75R 17 AS	8000	50.9	9.75	48.98	0.9145	0.11469
Incomplete					8500	51.4	10.26	52.20	0.9249	0.11470
72 sq. ft.					9000	51.9	10.76	55.40	0.9352	0.11471
					9500	52.4	11.25	58.59	0.9455	0.11472
					10000	52.8	11.73	61.75	0.9557	0.11473
					10500	53.3	12.20	64.91	0.9658	0.11474
					11000	53.8	12.66	68.05	0.9760	0.11475
					11500	54.3	13.12	71.17	0.9860	0.11477
					12000	54.8	13.56	74.28	0.9960	0.11478
					12500	55.3	14.01	77.38	1.0060	0.11479
					13000	55.8	14.44	80.47	1.0160	0.11480
					13500	56.2	14.86	83.55	1.0259	0.11481
F250/F350 SRW	6.2L	Auto	4x4	LT 245 75R 17 AS	8000	51.6	9.61	33.07	1.8084	0.10547
Incomplete					8500	52.1	10.11	36.14	1.8183	0.10548
72 sq. ft.					9000	52.6	10.61	39.19	1.8281	0.10549
					9500	53.0	11.10	42.22	1.8379	0.10550
					10000	53.5	11.58	45.24	1.8476	0.10551
					10500	54.0	12.05	48.25	1.8573	0.10552
					11000	54.5	12.52	51.24	1.8669	0.10553
					11500	54.9	12.97	54.21	1.8765	0.10555
					12000	55.4	13.42	57.18	1.8860	0.10556
					12500	55.8	13.87	60.13	1.8956	0.10557
					13000	56.3	14.30	63.07	1.9050	0.10558
					13500	56.8	14.73	66.00	1.9145	0.10559
				LT 265 70R 17 AT	8000	52.3	9.48	39.26	1.7359	0.10642
					8500	52.8	9.98	42.76	1.7426	0.10647
					9000	53.3	10.46	46.25	1.7492	0.10653
					9500	53.9	10.93	49.72	1.7558	0.10659
					10000	54.4	11.39	53.18	1.7623	0.10665
					10500	54.9	11.85	56.62	1.7689	0.10670
					11000	55.4	12.29	60.06	1.7754	0.10676
					11500	56.0	12.73	63.48	1.7819	0.10682
					12000	56.5	13.16	66.89	1.7884	0.10687
					12500	57.0	13.59	70.28	1.7948	0.10693
					13000	57.5	14.00	73.67	1.8012	0.10699
					13500	58.0	14.41	77.05	1.8076	0.10704
				LT 275 70R 18 AT	8000	54.0	9.17	50.12	1.7413	0.10725
					8500	54.7	9.63	54.16	1.7562	0.10726
					9000	55.3	10.08	58.17	1.7709	0.10728
					9500	56.0	10.52	62.17	1.7856	0.10730
					10000	56.6	10.94	66.14	1.8002	0.10731
					10500	57.2	11.36	70.09	1.8147	0.10733
					11000	57.8	11.77	74.03	1.8292	0.10735
					11500	58.5	12.18	77.95	1.8436	0.10736
					12000	59.1	12.57	81.85	1.8579	0.10738
					12500	59.7	12.96	85.74	1.8722	0.10740
					13000	60.3	13.34	89.61	1.8864	0.10741
					13500	60.9	13.71	93.47	1.9006	0.10743
				LT 275 65R 20 AT	8000	53.7	9.23	51.39	1.5233	0.11004
					8500	54.3	9.69	55.63	1.5301	0.11018
					9000	55.0	10.14	59.86	1.5369	0.11032
					9500	55.6	10.57	64.07	1.5436	0.11045
					10000	56.3	11.00	68.27	1.5503	0.11059
					10500	56.9	11.42	72.45	1.5569	0.11072
					11000	57.6	11.83	76.63	1.5636	0.11086

Vehicle Description						Track Coefficients				
						3-Term		f0	f1	f2
Body	Eng	Trans	Drive	Tire	ETW	HP@50	55-45 CDT	lbf	lbf/mph	lbf/mph^2
					11500	58.2	12.23	80.78	1.5702	0.11099
					12000	58.9	12.62	84.93	1.5768	0.11113
					12500	59.5	13.00	89.07	1.5834	0.11126
					13000	60.2	13.38	93.19	1.5900	0.11140
					13500	60.8	13.74	97.31	1.5966	0.11153
F250/F350 SRW	6.7L Diesel	Auto	4x4	LT 245 75R 17 AS	8000	51.8	9.58	34.06	1.8084	0.10547
Incomplete					8500	52.2	10.09	37.12	1.8183	0.10548
72 sq. ft.					9000	52.7	10.58	40.17	1.8281	0.10549
					9500	53.2	11.07	43.21	1.8379	0.10550
					10000	53.7	11.55	46.23	1.8476	0.10551
					10500	54.1	12.02	49.23	1.8573	0.10552
					11000	54.6	12.49	52.22	1.8669	0.10553
					11500	55.1	12.94	55.20	1.8765	0.10555
					12000	55.5	13.39	58.16	1.8860	0.10556
					12500	56.0	13.83	61.12	1.8956	0.10557
					13000	56.4	14.27	64.06	1.9050	0.10558
					13500	56.9	14.70	66.99	1.9145	0.10559
				LT 265 70R 17 AT	8000	52.4	9.46	40.24	1.7359	0.10642
					8500	52.9	9.95	43.74	1.7426	0.10647
					9000	53.5	10.43	47.23	1.7492	0.10653
					9500	54.0	10.90	50.70	1.7558	0.10659
					10000	54.5	11.36	54.16	1.7623	0.10665
					10500	55.0	11.82	57.61	1.7689	0.10670
					11000	55.6	12.26	61.04	1.7754	0.10676
					11500	56.1	12.70	64.46	1.7819	0.10682
					12000	56.6	13.13	67.87	1.7884	0.10687
					12500	57.1	13.55	71.27	1.7948	0.10693
					13000	57.6	13.97	74.65	1.8012	0.10699
					13500	58.1	14.38	78.03	1.8076	0.10704
				LT 275 70R 18 AT	8000	54.2	9.15	51.06	1.7413	0.10725
					8500	54.8	9.61	55.10	1.7562	0.10726
					9000	55.4	10.05	59.11	1.7709	0.10728
					9500	56.1	10.49	63.10	1.7856	0.10730
					10000	56.7	10.92	67.08	1.8002	0.10731
					10500	57.3	11.34	71.03	1.8147	0.10733
					11000	58.0	11.75	74.96	1.8292	0.10735
					11500	58.6	12.15	78.88	1.8436	0.10736
					12000	59.2	12.55	82.79	1.8579	0.10738
					12500	59.8	12.93	86.67	1.8722	0.10740
					13000	60.5	13.31	90.54	1.8864	0.10741
					13500	61.1	13.68	94.40	1.9006	0.10743
				LT 275 65R 20 AT	8000	53.8	9.21	52.30	1.5233	0.11004
					8500	54.5	9.67	56.54	1.5301	0.11018
					9000	55.1	10.12	60.77	1.5369	0.11032
					9500	55.8	10.55	64.98	1.5436	0.11045
					10000	56.4	10.98	69.18	1.5503	0.11059
					10500	57.1	11.39	73.37	1.5569	0.11072
					11000	57.7	11.80	77.54	1.5636	0.11086
					11500	58.4	12.20	81.70	1.5702	0.11099
					12000	59.0	12.59	85.84	1.5768	0.11113
					12500	59.6	12.98	89.98	1.5834	0.11126
					13000	60.3	13.35	94.10	1.5900	0.11140
					13500	60.9	13.72	98.22	1.5966	0.11153
F350 DRW	6.2L	Auto	4x4	LT 245 75R 17	8000	52.3	9.48	37.45	1.8191	0.10548
Incomplete					8500	52.8	9.98	40.72	1.8296	0.10549
72 sq. ft.					9000	53.3	10.47	43.96	1.8401	0.10550
					9500	53.8	10.94	47.19	1.8505	0.10552
					10000	54.3	11.41	50.40	1.8608	0.10553
					10500	54.8	11.87	53.60	1.8711	0.10554
					11000	55.3	12.32	56.78	1.8813	0.10555
					11500	55.8	12.77	59.94	1.8915	0.10556
					12000	56.3	13.21	63.10	1.9016	0.10557
					12500	56.8	13.64	66.24	1.9118	0.10558
					13000	57.3	14.06	69.37	1.9218	0.10560
					13500	57.7	14.48	72.48	1.9318	0.10561
F350/F450 DRW	6.7L Diesel	Auto	4x4	LT 245 75R 17	8000	52.5	9.44	39.43	1.8191	0.10548
Incomplete					8500	53.1	9.93	42.69	1.8296	0.10549
72 sq. ft.					9000	53.6	10.41	45.93	1.8401	0.10550
					9500	54.1	10.89	49.16	1.8505	0.10552
					10000	54.6	11.35	52.37	1.8608	0.10553

ROADLOAD CERTIFICATION SPECIFICATIONS

2014 F250/350/450 Incompletes

Vehicle Description						Track Coefficients				
						3-Term		f0	f1	f2
Body	Eng	Trans	Drive	Tire	ETW	HP@50	55-45 CDT	lbf	lbf/mph	lbf/mph^2
					10500	55.1	11.81	55.57	1.8711	0.10554
					11000	55.6	12.26	58.75	1.8813	0.10555
					11500	56.1	12.71	61.92	1.8915	0.10556
					12000	56.5	13.14	65.07	1.9016	0.10557
					12500	57.0	13.57	68.21	1.9118	0.10558
					13000	57.5	13.99	71.34	1.9218	0.10560
					13500	58.0	14.41	74.45	1.9318	0.10561

ED_002078G_00001322-00708

ROADLOAD CERTIFICATION SPECIFICATIONS

2014 Navigator

Vehicle Description						Track Coefficients				
						3-Term		f0	f1	f2
Body	Eng	Trans	Drive	Tire	ETW	HP@50	55-45 CDT	lbf	lbf/mph	lbf/mph^2
Navigator	5.4L	Auto	4x2	P 255 70R 18 AS	6000	21.5	17.23	47.64	0.5185	0.03517
					6500	22.2	18.12	51.88	0.5302	0.03519
					7000	22.8	18.95	56.14	0.5419	0.03521
				P 275 55R 20 AS	6000	21.5	17.24	47.21	0.5184	0.03530
					6500	22.2	18.10	51.60	0.5304	0.03534
					7000	22.9	18.91	56.04	0.5424	0.03538
				P 285 45R 22	6000	22.0	16.84	50.47	0.5195	0.03551
					6500	22.7	17.70	54.78	0.5308	0.03556
					7000	23.4	18.52	59.08	0.5421	0.03561
Navigator Long	5.4L	Auto	4x2	P 255 70R 18 AS	6000	21.8	17.02	47.64	0.5185	0.03597
					6500	22.4	17.90	51.88	0.5302	0.03599
					7000	23.1	18.73	56.14	0.5419	0.03600
				P 275 55R 20 AS	6000	21.8	17.03	47.21	0.5184	0.03610
					6500	22.5	17.89	51.60	0.5304	0.03614
					7000	23.1	18.70	56.04	0.5424	0.03617
				P 285 45R 22	6000	22.3	16.64	50.47	0.5195	0.03631
					6500	23.0	17.50	54.78	0.5308	0.03636
					7000	23.6	18.31	59.08	0.5421	0.03641
Navigator Limo	5.4L	Auto	4x2	P 255 70R 18 AS	8500	25.1	20.94	69.03	0.5774	0.03606
					9000	25.7	21.60	73.36	0.5893	0.03608
					9500	26.4	22.23	77.70	0.6012	0.03610
				XL 285 60R 18	8500	24.2	21.66	65.85	0.5405	0.03558
					9000	24.8	22.42	69.59	0.5485	0.03558
					9500	25.3	23.15	73.33	0.5565	0.03558
Navigator	5.4L	Auto	4x4	P 255 70R 18 AS	6000	23.7	15.62	56.56	0.9263	0.03006
					6500	24.4	16.47	60.80	0.9380	0.03008
					7000	25.0	17.27	65.06	0.9497	0.03010
				P 275 55R 20 AS	6000	23.7	15.63	56.13	0.9279	0.03017
					6500	24.4	16.45	60.52	0.9398	0.03021
					7000	25.1	17.23	64.96	0.9518	0.03025
				P 285 45R 22	6000	24.2	15.30	59.39	0.9268	0.03041
					6500	24.9	16.13	63.69	0.9381	0.03046
					7000	25.6	16.91	68.00	0.9495	0.03051
Navigator Long	5.4L	Auto	4x4	P 255 70R 18 AS	6000	23.9	15.53	56.56	0.9263	0.03046
					6500	24.5	16.38	60.80	0.9380	0.03048
					7000	25.2	17.18	65.06	0.9497	0.03050
				P 275 55R 20 AS	6000	23.9	15.54	56.13	0.9279	0.03057
					6500	24.5	16.37	60.52	0.9398	0.03061
					7000	25.2	17.15	64.96	0.9518	0.03064
				P 285 45R 22	6000	24.4	15.21	59.39	0.9268	0.03081
					6500	25.0	16.04	63.69	0.9381	0.03086
					7000	25.7	16.83	68.00	0.9495	0.03090

ROADLOAD CERTIFICATION SPECIFICATIONS

2014 Transit NA

Vehicle Description						Track Coefficients				
						3-Term		f0	f1	f2
Body	Eng	Trans	Drive	Tire	ETW	HP@50	55-45 CDT	lbf	lbf/mph	lbf/mph^2
All Transit Low Roof	All	Auto	4x2	235 65R 16	5250	21.6	15.05	46.27	0.5123	0.03597
					5500	21.9	15.54	48.32	0.5174	0.03599
					6000	22.5	16.48	52.43	0.5277	0.03602
					6500	23.1	17.37	56.53	0.5380	0.03605
					7000	23.8	18.21	60.63	0.5483	0.03608
					7500	24.4	19.00	64.74	0.5586	0.03611
					8000	25.0	19.76	68.84	0.5689	0.03614
					8500	25.6	20.48	72.94	0.5792	0.03617
					9000	26.3	21.17	77.05	0.5895	0.03620
					9500	26.9	21.82	81.15	0.5997	0.03623
					10000	27.5	22.44	85.25	0.6100	0.03626
					11000	28.8	23.61	93.46	0.6306	0.03632
All Transit Medium Roof	All	Auto	4x2	235 65R 16	5250	24.0	13.52	46.27	0.5123	0.04337
					5500	24.4	13.97	48.32	0.5174	0.04339
					6000	25.0	14.86	52.43	0.5277	0.04342
					6500	25.6	15.70	56.53	0.5380	0.04345
					7000	26.2	16.50	60.63	0.5483	0.04348
					7500	26.9	17.27	64.74	0.5586	0.04351
					8000	27.5	18.00	68.84	0.5689	0.04354
					8500	28.1	18.69	72.94	0.5792	0.04357
					9000	28.7	19.36	77.05	0.5895	0.04360
					9500	29.4	20.00	81.15	0.5997	0.04363
					10000	30.0	20.61	85.25	0.6100	0.04366
					11000	31.2	21.75	93.46	0.6306	0.04373
All Transit High Roof	All	Auto	4x2	All	5250	25.1	12.94	46.27	0.5123	0.04661
					5500	25.4	13.39	48.32	0.5174	0.04662
					6000	26.1	14.25	52.43	0.5277	0.04665
					6500	26.7	15.07	56.53	0.5380	0.04668
					7000	27.3	15.85	60.63	0.5483	0.04672
					7500	27.9	16.60	64.74	0.5586	0.04675
					8000	28.6	17.32	68.84	0.5689	0.04678
					8500	29.2	18.00	72.94	0.5792	0.04681
					9000	29.8	18.66	77.05	0.5895	0.04684
					9500	30.4	19.29	81.15	0.5997	0.04687
					10000	31.1	19.89	85.25	0.6100	0.04690
					11000	32.3	21.03	93.46	0.6306	0.04696
All Transit Incomp.	Diesel Only	Auto	4x2	195 75R 16	6000	42.9	8.67	51.76	0.5671	0.09663
72 sq.ft. .56 Cd					6500	43.5	9.27	55.46	0.5786	0.09663
					7000	44.0	9.86	59.15	0.5900	0.09663
					7500	44.6	10.42	62.82	0.6013	0.09664
					8000	45.2	10.98	66.46	0.6125	0.09664
					8500	45.7	11.52	70.09	0.6238	0.09664
					9000	46.3	12.05	73.71	0.6349	0.09664
					9500	46.8	12.57	77.31	0.6460	0.09665
					10000	47.4	13.07	80.89	0.6571	0.09665
					11000	48.5	14.05	88.02	0.6791	0.09665
					12000	49.6	14.99	95.09	0.7010	0.09666
66 sq.ft. .5 Cd	All	Auto	4x2	195 75R 16	6000	37.0	10.06	51.76	0.5671	0.07881
					6500	37.5	10.73	55.46	0.5786	0.07881
					7000	38.1	11.39	59.15	0.5900	0.07881
					7500	38.7	12.02	62.82	0.6013	0.07881
					8000	39.2	12.63	66.46	0.6125	0.07881
					8500	39.8	13.23	70.09	0.6238	0.07882
					9000	40.3	13.82	73.71	0.6349	0.07882
					9500	40.9	14.38	77.31	0.6460	0.07882
					10000	41.4	14.94	80.89	0.6571	0.07882
					11000	42.5	16.00	88.02	0.6791	0.07883
					12000	43.6	17.02	95.09	0.7010	0.07883
60 sq.ft. .5 Cd	All	Auto	4x2	195 75R 16	6000	34.5	10.77	51.76	0.5671	0.07150
					6500	35.1	11.48	55.46	0.5786	0.07150
					7000	35.7	12.16	59.15	0.5900	0.07150
					7500	36.2	12.82	62.82	0.6013	0.07151
					8000	36.8	13.47	66.46	0.6125	0.07151
					8500	37.3	14.09	70.09	0.6238	0.07151
					9000	37.9	14.70	73.71	0.6349	0.07151
					9500	38.5	15.29	77.31	0.6460	0.07152

ROADLOAD CERTIFICATION SPECIFICATIONS

2014 Transit NA

Vehicle Description						Track Coefficients				
						3-Term		f0	f1	f2
Body	Eng	Trans	Drive	Tire	ETW	HP@50	55-45 CDT	lbf	lbf/mph	lbf/mph^2
					10000	39.0	15.87	80.89	0.6571	0.07152
					11000	40.1	16.97	88.02	0.6791	0.07152
					12000	41.2	18.02	95.09	0.7010	0.07153
72 sq.ft. .56 Cd	Diesel Only	Auto	4x2	235 65R 16	6000	42.7	8.70	51.61	0.5257	0.09709
					6500	43.4	9.29	55.65	0.5358	0.09712
					7000	44.0	9.87	59.68	0.5459	0.09715
					7500	44.6	10.42	63.72	0.5560	0.09718
					8000	45.2	10.97	67.75	0.5661	0.09721
					8500	45.8	11.49	71.79	0.5763	0.09724
					9000	46.4	12.01	75.82	0.5864	0.09727
					9500	47.1	12.50	79.86	0.5965	0.09730
					10000	47.7	12.99	83.89	0.6066	0.09733
					11000	48.9	13.93	91.96	0.6268	0.09739
					12000	50.1	14.82	100.03	0.6471	0.09745
60 sq.ft. .5 Cd	All	Auto	4x2	235 65R 16	6000	34.4	10.82	51.61	0.5257	0.07196
					6500	35.0	11.51	55.65	0.5358	0.07199
					7000	35.6	12.18	59.68	0.5459	0.07202
					7500	36.2	12.82	63.72	0.5560	0.07205
					8000	36.8	13.45	67.75	0.5661	0.07208
					8500	37.5	14.05	71.79	0.5763	0.07211
					9000	38.1	14.63	75.82	0.5864	0.07214
					9500	38.7	15.20	79.86	0.5965	0.07217
					10000	39.3	15.75	83.89	0.6066	0.07220
					11000	40.5	16.79	91.96	0.6268	0.07226
					12000	41.8	17.77	100.03	0.6471	0.07232
55 sq.ft. .5 Cd	All	Auto	4x2	235 65R 16	6000	32.3	11.49	51.61	0.5257	0.06587
					6500	33.0	12.21	55.65	0.5358	0.06590
					7000	33.6	12.91	59.68	0.5459	0.06593
					7500	34.2	13.58	63.72	0.5560	0.06596
					8000	34.8	14.23	67.75	0.5661	0.06599
					8500	35.4	14.85	71.79	0.5763	0.06602
					9000	36.0	15.46	75.82	0.5864	0.06605
					9500	36.7	16.04	79.86	0.5965	0.06608
					10000	37.3	16.60	83.89	0.6066	0.06611
					11000	38.5	17.67	91.96	0.6268	0.06617
					12000	39.7	18.68	100.03	0.6471	0.06623

ROADLOAD CERTIFICATION SPECIFICATIONS *V408*

ehicle Description								Track Coefficients 3 Term		
Body	Eng	Trans	Drive	Tire	ETW	HP@50	5-45 CD	f0	f1	f2
V408 Van SWB	1.6L	Auto	FWD	215 55R 16	3750	13.8	16.87	22.84	0.4065	0.02401
					3875	13.9	17.31	23.52	0.4074	0.02401
					4000	14.0	17.75	24.20	0.4083	0.02401
V408 Van LWB	1.6L	Auto	FWD	215 55R 16	3750	13.7	16.98	22.86	0.4050	0.02378
					3875	13.8	17.42	23.54	0.4060	0.02378
					4000	13.9	17.85	24.22	0.4069	0.02378

ROADLOAD CERTIFICATION SPECIFICATIONS *V408*

Vehicle Description								Track Coefficients 3 Term		
Body	Eng	Trans	Drive	Tire	ETW	HP@50	55-45 CDT	f0	f1	f2
V408 Wagon SWB	1.6L	Auto	FWD	215 55R 16	3875	14.0	17.13	23.94	0.4094	0.02424
					4000	14.1	17.56	24.63	0.4104	0.02423
					4250	14.3	18.40	26.01	0.4122	0.02423
					4500	14.5	19.22	27.38	0.4141	0.02422
				215 50R 17	3875	14.2	16.87	26.45	0.3722	0.02462
					4000	14.3	17.26	27.35	0.3721	0.02463
					4250	14.6	18.03	29.14	0.3719	0.02466
					4500	14.8	18.77	30.93	0.3716	0.02468
V408 Wagon LWB	1.6L	Auto	FWD	215 55R 16	3875	13.8	17.37	23.98	0.4061	0.02370
(2 Row & 3 Row)					4000	13.9	17.81	24.67	0.4071	0.02370
					4250	14.1	18.66	26.05	0.4089	0.02369
					4500	14.3	19.48	27.42	0.4108	0.02369
				215 50R 17	3875	14.0	17.10	26.50	0.3689	0.02409
					4000	14.1	17.50	27.39	0.3688	0.02410
					4250	14.4	18.28	29.18	0.3686	0.02412
					4500	14.6	19.03	30.97	0.3683	0.02414

ROADLOAD CERTIFICATION SPECIFICATIONS *V408*

Vehicle Description								Track Coefficients 3 Term		
Body	Eng	Trans	Drive	Tire	ETW	HP@50	55-45 CDT	f0	f1	f2
V408 Van SWB	2.5L	Auto	FWD	215 55R 16	3750	14.2	16.38	22.75	0.4135	0.02515
					3875	14.3	16.81	23.43	0.4145	0.02515
					4000	14.4	17.23	24.11	0.4154	0.02515
V408 Van LWB	2.5L	Auto	FWD	215 55R 16	3750	14.1	16.47	22.77	0.4121	0.02493
					3875	14.2	16.91	23.45	0.4131	0.02492
					4000	14.3	17.33	24.13	0.4140	0.02492

ROADLOAD CERTIFICATION SPECIFICATIONS *V408*

Vehicle Description						3-Term		Track Coefficients 3 Term		
Body	Eng	Trans	Drive	Tire	ETW	HP@50	55-45 CDT	f0	f1	f2
V408 Wagon SWB	2.5L	Auto	FWD	215 55R 16	3875	14.4	16.64	23.85	0.4165	0.02538
					4000	14.5	17.06	24.54	0.4174	0.02538
					4250	14.7	17.88	25.92	0.4193	0.02537
					4500	14.9	18.69	27.29	0.4212	0.02536
				215 50R 17	3875	14.6	16.39	26.36	0.3793	0.02577
					4000	14.8	16.78	27.25	0.3792	0.02578
					4250	15.0	17.53	29.04	0.3790	0.02580
					4500	15.2	18.27	30.84	0.3787	0.02582
V408 Wagon LWB	2.5L	Auto	FWD	215 55R 16	3875	14.2	16.86	23.89	0.4132	0.02485
(2 Row & 3 Row)					4000	14.3	17.29	24.58	0.4141	0.02484
					4250	14.5	18.12	25.96	0.4160	0.02484
					4500	14.7	18.94	27.33	0.4179	0.02483
				215 50R 17	3875	14.4	16.61	26.40	0.3760	0.02523
					4000	14.6	17.00	27.30	0.3759	0.02524
					4250	14.8	17.76	29.09	0.3757	0.02526
					4500	15.0	18.50	30.88	0.3754	0.02528

Coastdown Calculation Summary

Track Testing

Ford conducts its track coastdown testing in accordance with SAE procedure J2263, *Roadload Measurement Using Onboard Anemometry and Coastdown Techniques*.

Single-Roll Electric Dynamometer Applications

Deceleration data are fitted as follows: $-M\frac{dV}{dt} = F_o + F_1V + F_2V^2$.

Dynamometer Testing

Single-Roll Electric Dynamometer Applications

Ford conducts its single-roll dynamometer testing in accordance with SAE procedure J2264, *Chassis Dynamometer Simulation of Roadload Using Coastdown Techniques*. Dynamometer force is adjusted such that

$A + BV + CV^2 = (F_o - a) + (F_1 - b)V + (F_2 - c)V^2$, where ABC's are dynamometer coefficients, F-terms are target (track) coefficients, and abc's are vehicle loss coefficients.

Roadload Determination using Analytical Methods

Ford uses analytical methods to establish many roadload parameters, as described in the letter mentioned above. In general, the method is performed as follows:

1. Perform actual coastdown/DPA test with a baseline vehicle.
2. Determine roadload impact of updated hardware using laboratory testing. Examples are listed below:
   - Tire change: Drums and twin-roll rolling resistance rigs are used to measure the new tire's rolling resistance. The change in rolling resistance may result in a change in total roadload.
   - Body change: A wind tunnel is used to measure the body change's effect on aerodynamic drag. The change in drag may result in a change in total roadload and DPA.
   - Transmission or driveline change: A single-roll dynamometer and wheel-mounted torque meters are used to determine the new hardware's effect on parasitic losses. The change in losses may result in a change in total roadload and/or DPA.
3. Using the data generated in steps 1 and 2, predict roadload parameters for a vehicle equipped with the new hardware.
4. Determine correlation between certification test site and bench test site.
5. Adjust numbers generated in step 3 using correlation data generated in step 4.
6. Routinely conduct audits to verify predicted parameters by performing coastdown/DPA testing on vehicle with correct hardware.

ED_002078G_00001322-00716

Certification Dynamometer / Road Load Horsepower Procedures

Ford maintains the following roadload determination procedures, available upon request. The procedures have been based on SAE J2263 and J2264

12.01.05.01 & 12.01.05.02 – Procedure for Determining the Road Load Horsepower for 48 in. 'Single' Roll Electric Dynamometers.
• CETP: 00.00-L-908

12.01.06.00 – Certification Coast down Procedure for Determining Road Load Horsepower.
• CETP: 00.00-R-901

ED_002078G_00001322-00717

1.0 INTRODUCTION

This Corporate Engineering Test Procedure defines the method for determining the Power Exchange Unit (PEU) Road Load Horsepower Determination for 48 inch single roll electric dynamometers. This Procedure incorporates the requirements of the Code of Federal Regulations (CFR), Title 40, and the California Code of Regulations (CCR), Title 13. It also clarifies regulations and provides additional Ford/government policies to ensure quality data. In the event that differences exist, Corporate policies supersede regulations based on Agency approval and/or more stringent Ford tolerances. Referenced information may be obtained from Vehicle Environmental Engineering (VEE) upon request.

1.1 COMMONALITY. This is a CONTROL TEST and can be used to qualify vehicles or components throughout the world. The test may be conducted at any location having the necessary equipment and facilities. Proposed revisions to this procedure must be submitted per FAP03-179.

1.2 In the event that requirements are exceeded during testing, continue with testing and contact the customer for further direction.

2.0 INSTRUMENTATION

2.1 All test measurement equipment must be calibrated and maintained per FAP03-015, Control, Calibration, and Maintenance of Measurement and Test Equipment.

2.2 All applicable safety guidelines and procedures must be followed.

3.0 EQUIPMENT AND FACILITIES

3.1 Approved Ford emissions test facility in compliance with 40 CFR 86.106, "Equipment required, overview."

3.2 Equivalent equipment may be used if approved by the responsible management and VEE before the test is conducted. Note: VEE approval is not required for development methodalogies.

3.3 Smoking is allowed in designated smoking areas only.

3.4 Test vehicles cannot be exposed at any time during the test sequence to temperatures outside the 68° - 86°F range, unless determination is performed at another specified temperature.

3.5 Soak area requirements:

3.5.1 Soak area temperature must be monitored at constant intervals not more than one minute apart and be maintained at 72° ± 82°F. Temporary excursions within 68°- 86°F are allowed. For development and in-use testing, soak area must be maintained between 68°- 86°F. Soak area temperature may change based on temperature in which the determinaton is performed.

3.5.2 There must be no solar load or condensation on vehicles in soak areas.

3.6 Test site requirements:

3.6.1 Test site must be verified by the appropriate responsible activities as being applicable and ready for the type of test being performed.

3.6.2 Test site temperature control system must be set to maintain an average temperature of 75 ± 3°F measured continuously at the inlet to the cooling fan. Excursions are permitted (and would not result in a void test) provided they are temporary in nature and do not exceed 68°- 86°F. For development and in-use testing, the ambient temperature must be within 68°- 86°F throughout the entire test. Test site temperature may change based on temperature in which the determinaton is performed.

3.6.3 There must be no solar load on vehicles and equipment in the test site.

3.6.4 Test site should provide sufficient air circulation such that the dilution air inlet is within 68°-86°F.

3.6.5 Ensure that the dynamometer is sufficiently warmed prior to the beginning of each shift that the dynamometer is used.

3.6.6 Cooling fan must be positioned vertically, squarely, and within 12 inches of the front bumper of the vehicle.

3.6.7 Additional cooling is not permitted without prior VEE approval, except for development testing. Request for additional cooling must be specified on the test request.

3.6.8 Cooling fan vehicle restraints, if used, must be positioned as close to the front bumper of the vehicle as possible without making contact.

3.6.9 The vehicle must be restrained to minimize horizontal movement. The restraints should place no more than a minimal vertical load (zero is preferred) on the drive wheels.

4.0 VEHICLE PREPARATION

4.1 Test vehicles must be configured, instrumented, inspected and approved as being ready for the applicable test by the appropriate responsible activities.

4.2 Prepare vehicle in compliance with 40 CFR 86.131, "Vehicle preparation" for certification testing.

4.3 Vehicle set-up criteria as applicable:

VEHICLE SET-UP	DEVELOP	CERT	END-OF-LINE	IN-USE
Traction assist off/disconnected	x	x	x	x
Four wheel and all wheel drive disconnected	x	x	o	x

All accessories turned off (unless otherwise noted)	x	x	x	x
Remove fuel tank shields for heat build	o	o	o	o
Vehicle ID label front/rear window	x	x	o	x

VEHICLE SET-UP	DEVELOP	CERT	END-OF-LINE	IN-USE
Marmon flange	x	x	o	
Environmental Altitude Test Chamber (EATC) (covered battery terminals, ignition interlock)	x			
OBD port	o	o	o	o
A/C disabled unless otherwise specified	x	x	x	
Point source probes	o			
Daytime running lamps disabled	o	sp[1]		
Fuel tank drains	o	x		x
Fuel tank thermocouples	o	x		x
Exhaust pipe and silencer(s) weep holes plugged	x	x		
Exhaust/catalyst sampling probes	o	sp[2]		
Engine coolant temperature (ECT) thermocouple	o	o		
Canister access	o	o		
Air/Fuel meter probe with rubber cap	o			
EGR sampling probe with rubber cap	o			
Forced cool-down option allowed	o			
Soak canister	o		o	o
Canister purge and load adapters	o	o		o
Oil sump thermocouple	o			
For HEVs, ensure that the 12V battery is fully charged	x	x	x	x
Thermocouples installed in other locations	o			

Note: **x** = required; **o** = optional; **blank** = not applicable; **sp** = special permission

4.4 Other criteria:

4.4.1 Cold tire pressure of drive wheels must be set to automotive manufacturer's recommended tire pressure. Cold tire pressure of non-drive wheels must be set at or between manufacturer's recommended tire pressure and 45 psi . If the manufacturer's recommended tire pressure is greater than 45 psi then the manufacturer's pressure must be used.

[1] Authorization provided under regulations 40 CFR 86.090-27
[2] Special approval from Certification Engineering prior to installation

4.4.2 Vehicles with manual transmissions must follow shift schedule supplied by the test requester. The manual shift schedule must be consistent with other shift schedules for exhaust and evaporative emissions test sequences.

4.4.3 Test vehicle must be approximately level during the PEU determination.

5.0 OPERATION

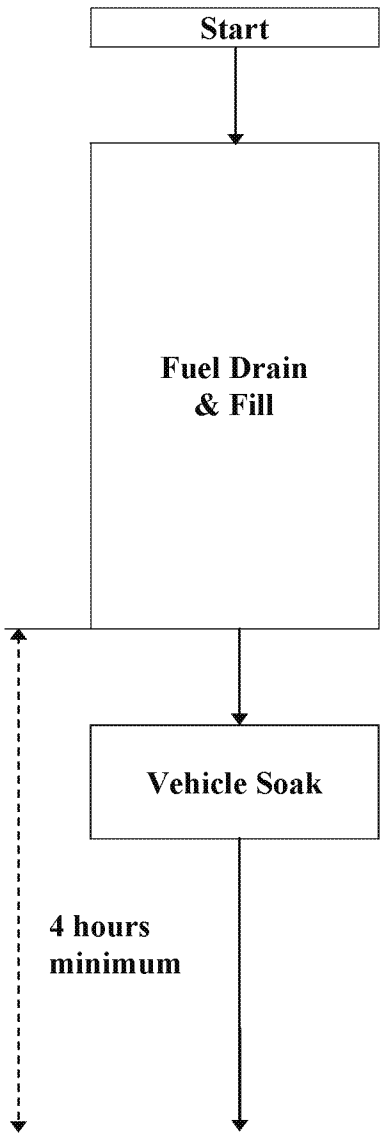

Windows are closed.
Fill within 20 minutes of draining.[3]
Fuel delivery temperature 45°-80°F.
Fuel fill to 40% of usable/advertised fuel capacity (Usable/advertised fuel capacity is defined by Ford Trustmark Standards (WCR): System Design Specification (FU-1050) and determined by the volumetric difference between the Reported Actual Liquid Capacity (FU-1047) and the Reported Unusable Fuel Amount (FU-1049)[4]. For in-use testing use the Certification Application to determine 40% usable fuel capacity.
Fill and record to nearest 0.1 gallon. Fuel type specified on test request.
The fuel cap must be installed within one minute after fueling.
If the vehicle has more than one fuel tank, ensure each is filled. After fueling, fuel tank selector switch must be in primary tank position.

Vehicle hood is closed and latched[5]. Ignition key in "off" position.
At the beginning of soak, set the drive wheel tire pressure to 5 psi above manufacturer's recommended tire pressure, unless otherwise requested.

[3] For end-of-line testing, this time limit does not apply.
[4] The fuel tank capacity design specification for usable capacity may be used for development testing if actual capacity is not available.
[5] When possible, for development only.

Preconditioning Drive	Set tire pressure of drive wheels back to specification. Center vehicle on the dynamometer with drive wheels perpendicular to dynamometer roll axis. Vehicle hood open. Enter in track coefficients. Set the dynamometer with the vehicle equivalent test weight (ETW) and road load coefficients estimated from the following[6]: $Dyno_{set}$ A_s = 0.5 x track coefficients, f_0 $Dyno_{set}$ B_s = 0.2 x track coefficients, f_1 $Dyno_{set}$ C_s = 1.0 x track coefficients, f_2 Conduct two back-to-back HwFET cycles. Roll count distance per cycle within 2.0% of theoretical: 10.3 miles.

30 seconds maximm

PEU Road Load Horsepower Determination	Driver must remain in the vehicle. Shift the vehicle into neutral. Turn ignition key to off position. Open and close driver's door. Dynamometer will accelerate the vehicle at 2 mph/sec to 75[7] mph and perform a coastdown from 75.0 to 9.0 ± 1.0 mph. Measure time in 10 mph increments from 70.0 to 10.0 mph to the nearest 0.01 second. Compare the $Dyno_{track}$ curve with the $Dyno_{measured}$ curve. - If the curves are within ± 2.0 lbs. at all points, perform two more coastdowns for verification. All three must be within ± 2.0 lbs. - If greater than ± 2.0 lbs. at any point, then reset the $Dyno_{set}$ coefficients by subtracting the $Dyno_{measured}$ coefficients of the previous coastdown from the $Dyno_{track}$ coefficients and adding the difference to their respective $dynamometer_{set}$ coefficients. Repeat up to 10 coastdowns, and evaluate runs until the ± 2.0 lbs. is met for three runs. After 10 attempts, resoak the vehicle before making additional attempts.[8] If the second verification run and the $Dyno_{set}$ curve is negative in the usable speed range, notify test requester, check for possible causes, document all actions taken, and proceed as follows: - If a vehicle problem is discovered, notify requester. - If a vehicle problem is not determined or if a negative load persists after

[6] Obtain values from Certification Engineering, except for development testing.
[7] The speed range for determination may be modified based on the capacity of the vehicle.
[8] The estimated coefficient values should be rechecked before the next attempt.

the second road load derivation, then either this or an approved alternative road load derivation process may be used to attempt new coefficients.[9]

End

Perform all applicable calculations in Section 5.1 to 5.3.
After the dynamometer has adjusted the $Dyno_{set}$ coefficients to satisfy the difference criteria, calculate the vehicle drivetrain parasitic friction coefficients ($Dyno_{vehicle}$) by subtracting the $Dyno_{set}$ coefficients from the $Dyno_{measured}$ coefficients.

5.1 The "average" deceleration force through each speed interval is computed using the inertia weight and coastdown times recorded by the dynamometer computer.

$$F_{Avg} = \frac{M\,(lb_m) \times \Delta V\,(mi\,/\,hr)}{CDT_{Actual}\,(s)} \times \frac{5280\ ft}{mi} \times \frac{1hr}{3600\ \sec} \times \frac{1lb_f}{32.174\ lb_m\,ft\,/\,s^2}$$

5.1.1 Simplified:

$$F_{Avg} = \frac{M \times \Delta V}{21.937 \times CDT_{Actual}}$$

(M = highway inertia, $F_{Measured}$ = average force calculated from time and speed measurements, CDT_{Actual} = measured coast down time over speed interval, ΔV = speed interval)

5.2 Perform the first error correction to account for the assumption of constant deceleration rate through a coastdown interval. This is done by first determining the interval coastdown time using the $Dyno_{set}$ coefficients.

$$CDT_{Expected} = \frac{M}{21.937} \times \int_{V_1}^{V_2} \frac{dV}{A + BV + CV^2}$$

5.2.1 Simplified:

$$CDT_{Expected} = \left[2\,(M\,/\,21.937)/\left(4AC - B^2\right)^{1/2}\right] \times \left[\arctan\left\{(2CV_2 + B)/\left(4AC - B^2\right)^{1/2}\right\} - \arctan\left\{(2CV_1 + B)/\left(4AC - B^2\right)^{1/2}\right\}\right]$$

[9] Negative loads may occur on new vehicles tested with coefficients determined from broken-in vehicles (typically 4000 mile vehicles). In such cases, negative loads are acceptable if a vehicle problem does not exist. Negative loads occur when $F=A_{set}+B_{set}V+C_{set}V^2 < 0$

(M = highway inertia, V_2 = speed at the beginning of the coastdown interval, V_1 = speed at the end of the coastdown interval)

5.2.2 Determine the expected average force over the interval.

$$F_{Exp,Avg} = \frac{M \times \Delta V}{21.937 \times CDT_{Expected}}$$

5.2.3 Determine the expected mid-point force using $Dyno_{set}$ coefficients and the mid-point velocity of each interval.

$$F_{Exp,Mid} = A + BV + CV^2$$

5.2.4 Calculate the partially corrected "approximate" force for each interval as follows:

$$F_{App} = F_{Avg} + (F_{Exp,Mid} - F_{Exp,Avg})$$

5.2.5 Calculate a quadratic regression on these approximate force values to give approximate coefficients A_{app}, B_{app}, & C_{app}.

5.3 Perform the second error correction by repeating the same calculation process as in the first error correction. However, set the $Dyno_{set}$ coefficients equal to the approximate coefficients and calculate the "actual" force using the same equations used to calculate the "approximate" force.

$$CDT_{Expected} = \frac{M}{21.937} \times \int_{V_1}^{V_2} \frac{dV}{A + BV + CV^2}$$

5.3.1 Simplified:

$$CDT_{Expected} = \left[2(M/21.937)/(4AC - B^2)^{1/2}\right] \times \left[\arctan\left\{(2CV_2 + B)/(4AC - B^2)^{1/2}\right\} - \arctan\left\{(2CV_1 + B)/(4AC - B^2)^{1/2}\right\}\right]$$

5.3.2 Then determine the expected average force over the interval.

$$F_{Exp,Avg} = \frac{M \times \Delta V}{21.937 \times CDT_{Expected}}$$

5.3.3 Now the expected mid-point force is determined using $Dyno_{App}$ coefficients and the mid-point velocity of each interval.

$$F_{exp} = A + BV + CV^2$$

5.3.4 Calculate the actual force for each interval as follows:

$$F_{Act} = F_{Avg} + (F_{Exp,Mid} - F_{Exp,Avg})$$

5.3.5 Run a quadratic regression on the actual forces to get the final $Dyno_{measured}$ coefficients.

6.0 GENERAL INSTRUCTIONS

6.1 Instructions to deviate from this CETP must be documented on the test request or by an approved change request.

6.2 This CETP does not apply to twin-roll dynamometers.

6.3 Coefficients determined at 68°- 86°F shall be used for testing at all laboratory temperatures unless otherwise requested. Ford reserves the right to derive coefficients at 20°F and 50°F.

6.4 During soak, the position of automatic windows can only be changed when the ignition key is in "accessory" mode.

6.5 Unless specifically stated the vehicle windows may be in any position.

7.0 PRESENTATION OF DATA

7.1 Provide data to requester as required per this CETP and applicable test request.

8.0 REFERENCES

8.1 FAP03-015, Control, Calibration, and Maintenance of Measurement and Test Equipment

8.2 FAP03-179, Developing Corporate Engineering Test Procedures

8.3 40 CFR Part 86, Subpart B; paragraphs 86.106-108, 113, 116, 118, 129, 131, 135, 142; Appendix I

8.4 40 CFR Part 600, Subpart B; paragraphs 600.107, 109-111

8.5 CCR, Title 13, Division 3, Chapter 1, 3

8.6 Applicable VEE Emission Laboratory Requirements (ELRs), including Vehicle Starting/Driving Criteria (ELR07P-105), Single Roll Electric Chassis Dynamometer Ready State Check (ELR07P-348).

8.7 Ford Trustmark Standards (WCR): System Design Specification (FU-1050), Reported Actual Liquid Capacity (FU-1047), and Reported Actual Unusable Fuel Amount (FU-1049).

8.8 Letter, "Ambient Coefficients Used for Cold CO Tests," February 28, 2000, from T. Fagerman to R. Sherby, et. al.

8.9 Letter, "Meeting Minutes – EPA/Ford Discussion about Single Roll Dynamometer and Quick Check," February 1, 2000, from E. Kulik to B. Bisaro, et. al.

8.10 EPA Dear Manufacturer Letter VPCD-98-16, "Single Roll Dynamometer Adjustment and Road Force Determination", December 21, 1998.

8.11 Letter, "Ford's New Procedures for the Determination and Application of Dynamometer Road Load Coefficients for Certification Testing," December 10, 1996, D. Kulp to T. Ball (EPA).

8.12 Letter, "Approval of Ford's New Procedures for the Determination and Application of Dynamometer Road Load Coefficients for Certification Testing", December 23, 1996, T. Ball (EPA) to D. Kulp.

8.13 SAE paper J2264, "Chassis Dynamometer Simulation of Road Load Using Coastdown Techniques," April 1995.

8.14 Letter, "Testing Vehicles Equipped with Daytime Running Lights," R. Maxwell (EPA), published February 9, 1994.

8.15 Letter, "Theoretical Distances for EPA-75 and HwFETs," November 30, 1993 from E. Smith (E&SE).

9.0 RECORD OF REVISIONS

See metadata field "Previous Review Notes".

Title: Certification Procedure for Determining on the Electric 48" Roll Diameter Dynamometer, Road Load Settings at Less than Ambient Cell Temperature	
Number: ESA08P- 3339	
Department: Certification Engineering Department, E&SE	**Revision Number: 05**
Effective Date: 11-01-1996	**Revision Date: 03-21-2002**
Approved By: D. Kulp	

1.0 Purpose:

This procedure describes the method of obtaining electric dynamometer (48" or larger roll diameter) load settings from 70 - 10 mph, for use when conducting 20 °F Cold CO or 50 °F NMOG emissions testing. These coefficients define the shape of the load curve and the required loading level for the test vehicle. In general 20 °F Cold CO and 50 °F NMOG emissions testing should use dynamometer coefficients derived at ambient temperature (60-86 °F) conditions. However, this procedure may be used if:

- Ambient (68-86 °F) coefficients are not available or
- Cold CO quick check failures occur.

2.0 Affected Activities:

- Research & Vehicle Technologies/Emissions Laboratories Department (RVT/ELD)
- Vehicle Environmental Engineering/Certification Engineering Department (VEE/CED)

3.0 Forms Used:

4.0 Related References/Documents:

- RVT/ELD Procedure, T690-T-010104, "Setting Derivation for the 48" Horiba Dynamometer (for Lightweight vehicles at Ambient)"
- RVT/ELD Procedure, T690-T-010102, "Dynamometer Setting Derivation for Less than 50 ° F Testing".
- RVT/ELD Procedure, T690-0-071106 "Vehicle Set-up for the 48" Dynamometer".
- Emissions Laboratory Guideline CETP 00.00-L-908 "Power Exchange Unit (PEU) Road Load Horsepower Determination".
- VEE Procedure, ESA08P-3337, "Certification Coastdown Procedure for Determining Alternate Twin-Roll Dynamometer Road Load Horsepower Setting".
- VEE Procedure, ESA08P-3338, "Certification Procedure for Determining on the Electric 48" Roll Diameter Dynamometer, Road Load Settings".
- Corporate Engineering Test Procedure, CETP 00.00-R-901, "Certification Coastdown Procedure for Determining Road Load Horsepower".

5.0 Definitions:

None

6.0 Exclusions:

None

7.0 Procedure:

1. VEE/CED will:

   a. Verify that the test vehicle matches the specifications for the required test configuration.

   b. Adjust the vehicle weight.
      i) 20 °F Cold CO: Adjust the vehicle weight such that the weight of the test vehicle (LVW or ALVW, as appropriate), including instrumentation, sufficient fuel to complete the test, and any on-board observing personnel, but excluding the driver, is within ±100 lbs. (45.4 kg) of vehicle design curb weight (at 40% fuel tank fill) defined in the vehicle specifications. In addition, drive axle load must be within ±50 lbs. (22.7 kg) of the design drive axle load of the vehicle.
      ii) 50 °F NMOG: Adjust the vehicle weight such that the weight of the test vehicle, including instrumentation, sufficient fuel to complete the test, and any on-board observing personnel, but excluding the driver, is within ±100 lbs. (45.4 kg) of vehicle design curb weight (at 40% fuel tank fill) defined in the vehicle specifications. In addition, drive axle load must be within ±50 lbs. (22.7 kg) of the design drive axle load of the vehicle. ALVW vehicles will have their weight adjusted, including the driver, to match the specified ALVW.

   c. Prior to delivery of the test vehicle to RVT/ELD, provide to RVT/ELD test engineers for input into their coefficient worksheet the following test parameters.

      - Vehicle Number
      - Vehicle Type
      - Required Tire Pressure
      - Total Vehicle Weight and Drive Axle Weight
      - ETW for the given test condition

   d. Supply to the RVT/ELD test engineer the following dynamometer coefficient information required for conducting testing on the 48" electric dynamometer.

      i) Dynamometer coefficients that were derived at ambient temperature (68 – 86 °F) conditions, if available. These coefficients will be expressed in the following terms:

         - A : lbs
         - B : lbs/mph
         - C : lbs/mph^2

ii) It is preferred to derive the dynamometer coefficients at ambient temperature (68-86 °F) conditions. However, if there is insufficient time or a lack of facilities, then a dynamometer road load derivation will be conducted at 20 °F or 50 °F for use on the Cold CO or NMOG test, respectively. These coefficients will be expressed in the following terms:

- F0 : lbs
- F1 : lbs/mph
- F2 : lbs/mph^2

e. Deliver the test vehicle to RVT/ELD for testing.

2. Conducting Dynamometer Tests

RVT/ELD is responsible for conducting the dynamometer tests and forwarding all data to VEE/CED. Vehicle preparation and dynamometer testing is conducted per Procedure T690-T-010102 (for 20°F) or T690-T-010104 (for 50°F).

3. VEE/CED will include final dynamometer settings in the DPA charts.

8.0 Attachments:

None

9.0 General Rules:

1. 20 °F Cold CO test: Vehicles that fail the quick check (CDT < 90% of target CDT, or CDT > 107% of target CDT) portion of a test should have new coefficients derived via this procedure. Please note that the target coastdown time (CDT) should be multiplied by 0.9, by VEE/CED, to factor in the increased lower temperature loading, as prescribed by EPA for the test.
2. 50 °F NMOG test: Vehicles that fail the quick check (CDT < 90% of target CDT, or CDT > 107% of target CDT) portion of a test should have new coefficients derived via this procedure.

10.0 Quality Records:

All required records are maintained per the Corporate Record Management guidelines

- Track Coastdown Test Results
- Dynamometer Test Results
- DPA Chart

11.0 Record of Revisions:

Date	Description	Pages Affected	Authorized By
4/26/1999	Changed quick check failure criteria from CDT ≥ 110% to CDT < 90% or CDT > 107%	3	D. Kulp
06/17/1999	Update Reference procedures. Updated Affected Activities. Eliminate ESA08P-33340 and combine 20 oF and 50 oF procedures into this procedure. Change title to "Less than Ambient…". Eliminate discussion about converting coefficients to Horsepower. Update purpose. Update General Rules.	1-3	T. Fagerman
08/10/2001	Changed Purpose to clarify applicability of ambient-derived coefficients. Clarified language in weight adjustment segment. Changed subsection enumerations to represent more clearly section hierarchies in document. Clarified QC failure criteria. Eliminated adjustment to track coefficients to account for additional loading at 20 °F (note: accounted for by adjusting target coastdown time).	1-3	N. Whitbeck
12/04/2001	Corrected referenced procedure numbers.	1	N. Whitbeck
03/21/2002	Added and corrected referenced procedure numbers.	1 and 3	N. Whitbeck

ED_002078G_00001322-00730

1.0 INTRODUCTION

This procedure describes the method of obtaining the Coastdown time, the track road load coefficients (F0,F1,F2) and the 50 mph total road load horsepower for a vehicle to be used for determining alternate dynamometer road load horsepower settings (PAU) and electric 48" roll diameter dynamometer road load coefficients (A,B,C), as applicable, for Certification testing.

The results obtained by the use of this procedure may be analytically adjusted, as required, using good engineering judgment, and based upon relevant product/component attributes to support demonstration of compliance with CFR 40, Part 86 and Environmental Protection Agency (EPA) Advisory Circular 55C Dated 5.12.1986.

Proposed revisions to this procedure must be submitted per FAP03-179.

2.0 INSTRUMENTATION

Equivalent instrumentation may be used if approved by test responsible management before the test is run.

2.1 Fifth Wheel Assembly or non contact radar unit. The vehicle speed versus time instrumentation shall have an accuracy of at least 0.32 km/hr (0.20 mi/hr) and a resolution of 0.2 km/hr (0.1 mi/hr). The timing error shall be less than 0.1%. The speed device mounted on the rear of the vehicle must not interfere with the vehicle aerodynamics.

2.2 Data Acquisition System with a minimum parallel sampling rate of 5 samples per second per channel and a sample time accuracy of 1 msec. Anemometer Based Coastdown and Drive Method (ABCD Analysis Software).

Note: The vehicle speed, relative airspeed, and yaw angle signals are to be filtered with identical low-pass filters that produce a minimum 60 dB/decade attenuation above a minimum corner frequency of 0.7 Hz and provide a minimum 20 dB attenuation at a frequency equal to one-half the data sampling rate.

2.3 Weight scale, capable of measuring up to 4500 ± 5 kg (10,000 ± 10 lbs),

2.4 Weather Data

2.4.1 Relative Air Speed shall be recorded with a resolution of 0.04 kph (0.03 mph).

2.4.2 Yaw Angle shall be recorded with a resolution of 0.01 deg.

Note: Relative wind speed and yaw angle is measured with a vehicle mounted anemometer. The anemometer may be mounted on a boom located in front of the vehicle, or mounted on the roof, 12 inches behind the windshield molding.

2.4.3 Thermometer, capable of measuring 38 °C (100 °F). The temperature instrument shall have an accuracy of ±1 °C (±2 °F) and be located within 1.6 km (1 mile) of the test track or road, preferably as close as possible. The temperature instrument should measure air temperature and hence be shielded from the sun or other radiant energy sources.

2.4.4 Aneroid barometer, capable of measuring 105 kPa (31 in-Hg). The pressure instrument shall have an accuracy of at least ±0.3 kPa (±0.2 in Hg) and the measured barometric pressure shall be station pressure, not corrected to sea level. It is preferable to have the instrumentation within 1.6 km (1 mile) of the test road or track.

2.5 Tire pressure gage, capable of measuring up to 550 ± 3 kPa (80 ± 0.5 psi.)

2.6 All test measurement equipment must be calibrated and maintained per FAP03-015, Control, Calibration, and Maintenance of Measurement and Test Equipment.

2.7 All applicable safety guidelines and procedures must be followed.

3.0 EQUIPMENT AND FACILITIES

3.1 Track or road surface that is straight, flat and level for a minimum road or track length of 2.4 to 3.2 km (1.5 to 2 miles). The road or test track surface shall be hard, smooth, dry, and obstacle free with minimal interference from other vehicles during data collection. The surface texture and composition should be similar to road surfaces commonly in use. Grade shall not exceed 0.5% and road crown should be minimal. The grade must be constant, ± 0.1%, throughout the test section.

Note: The absence of intermittent wind barriers near the road or track surface is preferred, to reduce positional wind variations.

4.0 SAMPLE PREPARATION

4.1 Receive vehicle and vehicle specifications from the appropriate requesting activity.

4.1.1 The tires used on the vehicle must be broken in for at least 3218 km (2000 miles) or using an equivalent laboratory aging technique. The break-in should be done at the requester recommended tire pressure and specified wheel alignment. The break-in should be done on the test vehicle, or on a similar vehicle. The vehicle tires must have at least 50% of the original tire tread depth remaining.

4.1.2 Inspection. Inspect the vehicle in accordance with CETP 00.00-R-606 , Vehicle Inspection Standards except for weighing and wheel reaction determinations which are performed per this procedure (Section 4.8).

4.1.3 Preliminary Tune-up. Check engine oil level, transmission oil level, coolant level, and power steering fluid level. Vehicle must have 2000 miles accumulated mileage obtained from track or customer usage.

4.1.4 Powertrain Break-in. Any powertrain component must have at least 3218 km (2000 miles) of break-in before the test.

4.2 Install test tires.

4.3 Perform wheel alignment. Optional, may be waived if wheel alignment was set during preview testing. Check wheel alignment prior to test to ensure it is within requester specifications as outlined in the vehicle specifications (ensure that alignment is performed at the proper vehicle design curb weight). If wheel alignment is out of specification, adjust to the mean level and record data.

4.4 Ensure vehicle exterior is clean.

4.5 Install the following vehicle test instrumentation:

4.5.1 Mount vehicle speed sensor on rear license plate bracket.

4.5.2 Option 1: Install anemometer on the 8' boom on the front of vehicle's underbody. Ensure that the aerodynamic flow of the vehicle underbody is undisturbed. Set the anemometer height at the geometric center of the vehicle.

Option2: Install roof mounting baseplate with bracket stem located on the roof centerline 12" behind the windshield molding. The anemometer must be horizontal to the ground.

4.5.3 Place the data acquisition system inside the vehicle on the passenger seat and secure with the seat belt. Connect the speed sensor and anemometer wiring to the system. Connect the system to 12 volts DC to ensure proper operation.

NOTE: Instrumentation wires and tape must be kept out of the air stream as much as possible.

4.6 Adjust tires to a minimum of 34 kPa (5 psi) over the specified pressure, and soak the tires for a minimum of four hours at the test ambient temperature shielded from the sun or other radiant energy sources.

4.7 Adjust tire pressure to the "minimum recommended" values as specified in the vehicle sign-off sheets after tire soak.

4.8 Adjust the vehicle weight such that the weight of the test vehicle, including instrumentation, sufficient fuel to complete the test, and any on-board observing personnel, but excluding the driver, is within ± 45 kg. (100 lbs) of vehicle design curb weight (at 40% fuel tank fill) defined in the vehicle specifications. In addition, drive axle load must be within ± 23 kg (50 lbs) of the design drive axle load of the vehicle. Record weights.

NOTE: All weighing must be done with all four tires on the same plane.

4.9 Record vehicle suspension heights and attitude.

4.10 Requestor must indicate if the test vehicle has special software required to achieve "true neutral" specific for the coastdown test only. This feature may require special procedural steps to engage entry into the mode. All test vehicles must have PCM and TCM filenames recorded prior to the test by recording from the OBDII slot using a CARDAQ or similar system.

4.11 Ensure that the transfer case on 4 x 4 vehicles is shifted into two-wheel drive and front hubs are set in the "unlock" position.

4.12 Forward a copy of the vehicle specifications including all vehicle sign-off records to the Coastdown/FTTP/Special Programs Section, VEE -CED. Forward a copy of the appropriate new PAU vehicle sign-off sheets to the Certification Engineering Department for approval.

5.0 OPERATION

5.1 Operating conditions.

5.1.1 Wind Speed. Steady winds must be less than 32km/hr (20 mi/hr) and peak wind speed shall not exceed 48 km/hr(30 mi/hr). The data analysis corrects for wind speed in the direction traveled and crosswinds.

5.1.2 Temperature. The ambient temperature at the test time shall be in the range 10 – 30 °C (50 - 90 °F).

5.1.3 Barometric Pressure. The barometric pressure shall be in the range 104 kPa (31.0 in Hg) to 91 kPa (27.0 in Hg).

5.2 Record a 180° swing of the anemometer on the E-Prom of the data acquisition system.

5.3 Vehicle warm up.

5.3.1 Turn on vehicle instrumentation.

5.3.2 Conduct a 30 minute warm-up at a steady speed of 50 mph (80.5 km/hr) if on an oval test track. If on a straightaway, the warm up consists of 30 minutes on the straightaway at a steady speed of 50 mph (80.5 km/hr), after a moderate acceleration from the turn around at each end of the straightway.

NOTE: A maximum five minute engine idling period is allowed between warm-up and coastdown runs. Record pre-run data.

5.4 After warm-up, close all vehicle windows and vents. Check all instrumentation for proper operation. Turn off heating/air conditioning/ventilating system.

5.5 Record the following data during coastdowns.

5.5.1 Relative air speed and yaw angle - once per second.

5.5.2 Ambient dry bulb and wet bulb temperature – middle of test

5.5.3 Barometric pressure – middle of test

5.5.4 Relative humidity- middle of test

NOTE: The standard speed for adjusting the dynamometer power absorber has been chosen as 50 mph (80.5 km/hr). The speed-time coastdown data must include this speed if it can be attained by the vehicle.

5.6 Accelerate the vehicle to 75 mph (120.7 km/hr) and allow to stabilize for several seconds. Shift the transmission into neutral and start recording data. Collect the speed versus time data for the freely decelerating vehicle. Collect data from 70 - 10 mph (112.6 - 16.1 kph) speed range. For manual transmission vehicles, the clutch pedal must be released after the shift to neutral. The driver's foot must remain off the clutch, brake and accelerator pedals during the coastdown. Coastdown until the vehicle decelerates to 9 mph (14.5 km/hr) ensuring that the data is recorded. Stop recording data.

NOTE: The coastdowns are conducted from 70 - 10 mph (112.6 - 16.1 kph). Analysis of the 70 -10 mph data will be used to determine f_0, f_1 and f_2 coefficients for 48" single-roll testing. Analysis of 60 - 20 mph data will be used to determine f 0 and f_2 used to calculate the 55 - 45 mph coastdown time for twin-roll testing. The 60 - 20 mph data is to be used for certification testing on the twin roll hydrokinetic dynamometer, while the 70 - 10 mph data will be used for certification testing on the single 48" roll electric dynamometer.

5.7 Repeat the coastdown process, in alternated directions, for a minimum of 10 sequential runs, 5 sets of paired runs. (Use all valid paired data recorded.)

NOTE: Drive additional paired runs immediately if on site observation indicates invalid test runs, such as application of brakes during coast down or high wind conditions. All invalid test runs must be retained with the test records along with the reason for the void.

5.8 Weigh and record the weight of the vehicle including the driver, the test instrumentation, any ballast and any observers carried at the time of the coastdown testing immediately after completion of the coastdown tests.

5.9 Record the total and drive axle weights of the vehicle.

NOTE: This total vehicle weight (gravitational mass) measurement represents a part of the total effective test mass of the vehicle as described in paragraph 6.2.

5.10 Split Run and Coastdown Tests (conduct ONLY if straightaway length is insufficient)

5.10.1 Conduct practice runs to establish a break speed that provides a 10 mph (16.1 km/hr) overlap for two passes. Ensure that data is obtained down to 9 mph (14.5 km/hr).

5.10.2 Proceed to either runway and accelerate vehicle to 75 mph (120.7 km/hr) allowing several seconds to stabilize during the turn. Start recording data, shift the transmission into neutral while entering the straight-away. Collect the speed versus time data for the freely decelerating vehicle. For manual transmission vehicles the clutch pedal must be released after the shift to neutral. The driver's foot must remain off the clutch, brake and accelerator pedals during the coastdown. Coastdown until the vehicle decelerates to the break speed. Stop recording data.

5.10.3 Repeat paragraph 5.10.2 on the same runway in the opposite direction.

5.10.4 Proceed on the same runway in the opposite direction. Accelerate the vehicle to a speed 15 mph (24.1km/hr) higher than the brake speed during the turn. Start recording data. Shift the transmission to neutral while enter the straightway. Collect the speed versus time data for the freely decelerating vehicle. For manual transmission vehicles the clutch pedal must be released after the shift into neutral. The driver's foot must remain off the clutch, brake and accelerator pedals during the coastdown. Coast down until the vehicle decelerates to 9 mph (14.5 km/hr). Stop recording data.

5.10.5 Repeat paragraph 5.10.4 on the same runway in the opposite direction.

5.10.6 Repeat paragraph 5.10.2 through 5.10.5 until a total of at least 10 complete sequential runs have been completed (5 pairs).

5.11 Weigh and record the weight of the vehicle including the driver, the test instrumentation, any ballast and any observers carried at the time of the coastdown testing immediately after completion of the coastdown tests.

5.12 Record the total and drive axle weights of the vehicle.

6.0 GENERAL INSTRUCTIONS

6.1 Standard Ambient Conditions. Since the ambient conditions will affect the vehicle road load, test ambient conditions must be corrected to standard ambient conditions for consistent results. The standard ambient conditions are:

- Wind . . . . . Still air, zero wind speed
- Temperature . . . . . 68 °F (20 °C)
- Barometric Pressure . . 29.0 in Hg at 60 °F (98 kPa at 15.5 °C)

6.2 **Total Effective Test Mass Calculations.** The total vehicle inertia is represented by the total effective test mass of the vehicle which is defined as the sum of the gravitational mass of the vehicle [as measured per paragraph 5.8] and the effective equivalent mass of the rotating components of the vehicle as described below:

The equivalent effective mass of the vehicle rotating assemblies must be determined. If the rotational inertia is experimentally measured or calculated from the rotational inertias of the components, the equivalent effective mass of the assembly is given by:

$$Me = I/(RR)^2 \qquad (1)$$

$$Me = Mr + Mf$$

Where:

$$Mr = \frac{(IDS + IPI)(AR)^2 + IAA + 2I_{DB} + 2I(T/W)}{(RR)^2}$$

$$Mf = \frac{2I(T/W) + 2I_{NB}}{(RR)2}$$

and

AR = the axle ratio

Me = the equivalent effective mass of the assembly

Mf = the equivalent effective mass of the non-driven wheels

Mr = the equivalent effective mass of the driven wheels

I = the rotational inertia of the:

AA, axle assembly (ring gear axle, differential)

DB, driven wheel brake

DS, drive shaft

NB, non-driven wheel brake

PI, pinion

T/W, tire-wheel assembly

RR = the rolling radius of the tire (ft.)

The total effective test mass of the vehicle is then given by:

$$M = Mg + Me \quad (2)$$

Where:

M = the total effective test mass of the vehicle

Mg = the gravitational mass of the vehicle as tested (measured in paragraph 5.11)

Me = the effective equivalent mass of the rotating components of the vehicle

Alternatively, if the rotational inertia of the tire wheel assemblies is not known, the effective mass of the four wheel-tire assemblies and drive train components may be estimated as 3.0 percent of the vehicle test mass. In this case, the total effective mass of the vehicle system is:

$$M = 1.030Mg \quad (3)$$

6.3 **Road Force Data Reduction**.

6.3.1 The vehicle road load process supports methodology that EPA has approved to support electric dynamometer based certification efforts. The first step involves the fit of the measured data to the expected form of the more general road load model that EPA endorses for use in the determination of the aerodynamic and mechanical drag characteristics of the vehicle under the ambient pressure and temperature conditions in the test and under wind-free conditions. In the second step, the aerodynamic and mechanical characteristics analyzed in the first step are utilized in the prediction of the speed versus time history that would have been measured had the vehicle been coasted under the test ambient pressure and temperature and in a wind-free environment. In the third step the "data" predicted in the second step are analyzed with the current EPA road load model to determine the road load and chassis dynamometer coastdown time that must be achieved in order to duplicate the EPA-modeled road load on the dynamometer. The described process is totally implemented within one of the analysis options provided by the Anemometer Based Coastdown and Drive Method (ABCD Analysis Software).

6.3.2 The equation of motion that is utilized in the first step of the analysis process can be written as,

$$M(dV/dt) = D_{MECH} + D_{AERO} + D_{GRAV} \quad (1)$$

where:

D_{MECH} - the mechanical drag force acting on the vehicle which is the sum of the tire rolling resistance and the losses due to friction inboard of the hubs at the front and rear axles.

D_{AERO} - the aerodynamic drag acting on the vehicle

D_{GRAV} - the drag due to gravitational effects - $W(dh/ds)$

h - local elevation of test course

s - distance traveled along test course

M - the total effective test mass of the vehicle

W - the gravitational weight of the test vehicle

V - vehicle speed

t - time

The mechanical and aerodynamic drag forces appearing in Equation (1) are modeled in the following manner:

$D_{MECH} = F_0 + F_1V + F_2V^2$

$D_{AERO} = 1/2\rho C_d(\Psi)A_fV_r^2$ where $C_d(\Psi)=\Sigma\alpha_i\Psi^i$ for i = 0 to 4

where:

F_0,F_1, and F_2 - coefficients in mechanical drag model

Ψ = yaw angle

A_f = aerodynamic drag reference area

$C_d(\Psi)$ = vehicle drag coefficient at yaw angle Ψ

ρ = air density

V_r = relative airspeed

α_i = coefficients in drag coefficient variation with yaw angle model

Combining the various terms identified above with Equation (1), the final form of the equation of motion utilized in the first step of the analysis process becomes,

$$M(dV/dt) = F_0 + F_1V + F_2V^2 + 1/2\rho A_f\Sigma\alpha_i(\psi^i V_r^2) + W(dh/ds)|_s \quad (2)$$

for i from 0 to 4

6.3.3 The implementation of the gravitational drag model in Equation (2) requires that the elevation profile of the test track be known. In situations where the grades do not exceed the limitations imposed by the current EPA procedure and the analysis utilizes data measured in pairs of coasts run in opposite directions, the analysis can be carried out as though the track surface had a constant elevation.

6.3.4 The fundamental data utilized in the solution for the three mechanical drag coefficients F_0, F_1 and F_2 and the five aerodynamic drag coefficients α_i are the time histories of the vehicle speed, the relative air speed, and the yaw angle experienced by the vehicle during the test. These histories are recorded in the form of sets of parallel observations which are simultaneously sampled at equal time intervals during the period of each coastdown test.

Integrating Equation (2) over a single such time interval and rearranging obtains,

$$M(\Delta V/\Delta t) = F_0 + \overline{F_1 V} + \overline{F_2 V}^{\,2} + 1/2\rho A_f \overline{\Sigma\alpha_i(\psi^{\,i}\, V_r^2)} + \overline{W(dh/db)}|_s \qquad (3)$$

where the overbars represent averages of the respective quantities over time interval Δt.

Utilizing the recorded V, V_r and the Ψ data together with the other independently obtained quantities in the evaluation of Equation (3) for each time interval over which data are recorded, approximately 1200 equations are obtained in terms of the three unknown valves of F_0, F_1 and F_2 and the five unknown values of α_i. The solution for these values is obtained using linear regression.

6.3.5 The second step in the solution process involves the prediction of the speed versus time history that would have been measured had the test vehicle been coasted on a level track in the absence of winds. In such a case, the grade would be zero, the relative airspeed would be equal the vehicle speed, and the yaw angle would be zero. The prediction is obtained from an integration of Equation (2) wherein the required values for F_0, F_1 and F_2 and a0 are provided by the solution obtained in the first step of the analysis process. Although this integration can be obtained by analytic methods, a numerical integration is used within ABCD. Noting that α_0 = the zero yaw drag coefficient - C_d, the sought after speed versus time prediction is obtained by numerically integrating the following expression,

$$V(t) = V_0 - \int F_0 + F_1 V + (F_2 + 1/2\rho A_f C_d)V^2)dt \qquad (4)$$

where V0 is the initial speed and V(t) represents the predicted speed versus time history for coast on a level track in absence of winds. In view of its intended use as described below, the predicted speed is output as "data" at one second intervals over a 60 to 20 mph or 70 to 10 mph speed range.

6.3.6 The coefficients F0, F1 and F2 (adjusted per section 6.4 below) are used as force targets in subsequent dyno force derivations.

6.4 Ambient Correction to the Total Road Force

6.4.1 The total road force must be corrected to the standard ambient conditions. Since the F_2 coefficient is assumed to be the aerodynamic drag component, this term is corrected for differences between the air density at the test conditions and the air density at the standard conditions. The corrections can be written in the form:

$$F_2' = C^T C^B F_2 \quad (7)$$

Where:

F_2' = the corrected force coefficient for the v^2 term

C^T = the temperature correction factor for the ambient conditions

C^B = the barometric correction factor for the ambient conditions

The temperature correction factor is:

$$C^T = (459.7° + T)/527.7\ °F \quad (8)$$

Where:

T = the test ambient temperature in degrees F.

The barometric pressure correction factor is:

$$C^B = 29.0 \text{ in Hg/BAR} \quad (9)$$

Where:

BAR = the test ambient barometric pressure in inches Hg.

6.4.2 The terms F_0 and F_1 are assumed to represent the mechanical losses and should be corrected for the difference between the test ambient temperature and the standard ambient temperature. The correction may be expressed as:

$$F_{0'} = F_0 [1 + K_0(T - 68°F)] \text{ and } F_{1'} = F_1 [1 + K_0(T - 68°F)] \quad (10)$$

Where K_0 may be based on empirical data for the particular vehicle drive train and tires tested, if this information is available, or may be assumed to be 4.5 x 10 -3 /°F.

6.4.3 The force on the vehicle at the standard ambient condition is, therefore, given from the above terms as:

$$F' = F_0' + F_1'V + F_2'V^2 \quad (11)$$

7.0 PRESENTATION OF DATA

7.1 The final test report should contain at least the force coefficients and the vehicle mass.

8.0 REFERENCES

8.1 Environmental Protection Agency (EPA) Advisory Circular 55C Dated 5.12.1986.

8.2 CETP 00.00-R-606, Vehicle Inspection Standards.

8.3 ESA08P-223B, Accelerated Durability Vehicle Mileage Accumulation Cycle.

8.4 FAP03-015, Control, Calibration, and Maintenance of Measurement and Test Equipment.

8.5 FAP03-179, Developing Corporate Engineering Test Procedures.

9.0 RECORD OF REVISIONS

See metadata field "Review Note".

10.0 ATTACHMENT

None.

2014 MY Fuel Tank Information

NOTE: Nominal Fuel Tank Capacity = Useable Refill Capacity

MODEL TYPE	S=Standard O=Optional AVAIL-ABILITY	TANK CODE	NOMINAL FUEL TANK CAPACITY Liters	NOMINAL FUEL TANK CAPACITY US Gallons	USEABLE 40% FILL US Gallons	VAPOR VOLUME CUBIC FT @ 40% FILL	TANK MATERIAL
Fiesta	S	B	46.9	12.4	5.0	1.4	HDPE Plastic
Focus	S	C	46.9	12.4	5.0	1.6	HDPE Plastic
Fusion /MKZ 1.5L GTDI, 1.6L GTDI, 2.5L, 2.0L GTDI-FWD	S	CF	62.5	16.5	6.6	1.7	HDPE Plastic
Fusion /MKZ 2.0L GTDI-AWD, 3.7L (FWD/AWD)	S	CA	66.2	17.5	7.0	1.6	HDPE Plastic
Fusion /MKZ FHEV	S	CH	51.1	13.5	5.4	1.9	HDPE Plastic
C-Max FHEV	S	CH	51.1	13.5	5.4	1.4	Steel
Fusion /C-Max Energi PHEV	S	CP	53.0	14.0	5.6	1.4	Steel
Taurus /MKS	S	DF (FWD) DA (AWD)	71.9 71.9	19.0 19.0	7.6 7.6	2.4 2.1	HDPE Plastic
Police Interceptor Sedan/Special Service Police	S	DA	71.9	19.0	7.6	2.1	HDPE Plastic
Edge /MKX	S	EF (FWD) EA (AWD)	69.3 72.7	18.3 19.2	7.3 7.7	1.8 1.9	HDPE Plastic
Flex /MKT	S	FF	70.4	18.6	7.4	2.1	HDPE Plastic
Mustang	S	M	60.6	16.0	6.4	1.5	HDPE Plastic
Escape ** (All vehicles built prior to 7/15/2013 use the smaller 15.1 gallon fuel tank)	S S	C5 C6	57.2 58.7	15.1 15.5	6.0 6.2	1.6 1.6	HDPE Plastic HDPE Plastic
Explorer	S	FF	70.4	18.6	7.4	2.1	HDPE Plastic
Police Interceptor Utility	S	FF	70.4	18.6	7.4	2.1	HDPE Plastic
Transit Connect	S	VN	62.0	16.4	6.6	1.7	HDPE Plastic
F-150 3.5L GTDI (4x2) ONLY 144.5", 156.5", 163.0"	S	FG	98.4	26.0	10.4	3.6	HDPE Plastic
F-150 3.5L GTDI (4x4) ONLY 144.5", 156.5", 163.0"	S	FH	136.3	36.0	14.4	3.4	HDPE Plastic
F-150 TREMOR 3.5L GTDI (4x4/4x2) 126.0"	S	FB	98.4	26.0	10.4	2.6	HDPE Plastic
F-150 All Engines Except 3.5L GTDI Regular Cab (4x4/4x2) 126.0"	S	FA	98.4	26.0	10.4	2.6	HDPE Plastic

2014 MY Fuel Tank Information

NOTE: Nominal Fuel Tank Capacity = Useable Refill Capacity

MODEL TYPE	S=Standard O=Optional AVAIL-ABILITY	TANK CODE	NOMINAL FUEL TANK CAPACITY Liters	NOMINAL FUEL TANK CAPACITY US Gallons	USEABLE 40% FILL US Gallons	VAPOR VOLUME CUBIC FT @ 40% FILL	TANK MATERIAL
144.5"	S	FC	98.4	26.0	10.4	3.6	HDPE Plastic
	O	FD[1]	136.3	36.0	14.4	3.4	HDPE Plastic
[1] Optional in lieu of Standard Tank. Req. with 8200# GVW 4x4.							
Super Cab (4x4/4x2) All Engines Except 3.5L GTDI							
132.5" (4x4 SVT ONLY)	S	FA	98.4	26.0	10.4	2.6	HDPE Plastic
144.5" (4x2 ONLY)	S	FC	98.4	26.0	10.4	3.6	HDPE Plastic
	O	FD[1]	136.3	36.0	14.4	3.4	HDPE Plastic
163.0" (4x2 ONLY)	S	FC	98.4	26.0	10.4	3.6	HDPE Plastic
	O	FD[1]	136.3	36.0	14.4	3.4	HDPE Plastic
[1] Optional in lieu of Standard Tank. Req. with 4x4.							
Super Crew Cab (4x4/4x2) All Engines Except 3.5L GTDI							
144.5" (4x2 ONLY)	S	FC	98.4	26.0	10.4	3.6	HDPE Plastic
	O	FD[1]	136.3	36.0	14.4	3.4	HDPE Plastic
144.5" (4x4 SVT ONLY)	S	FD	136.3	36.0	14.4	3.4	HDPE Plastic
156.5" (4x2 ONLY)	S	FC	98.4	26.0	10.4	3.6	HDPE Plastic
	O	FD[1]	136.3	36.0	14.4	3.4	HDPE Plastic
[1] Optional in lieu of Standard Tank. Req. with 4x4.							
Expedition							
4x2	S	TJ	106.0	28.0	11.2	2.7	HDPE Plastic
4x4	S	TJ	106.0	28.0	11.2	2.7	HDPE Plastic
Expedition EL							
4x2	S	TE	126.8	33.5	13.4	3.3	HDPE Plastic
4x4	S	TE	126.8	33.5	13.4	3.3	HDPE Plastic
Navigator							
4X2	S	TJ	106.0	28.0	11.2	2.7	HDPE Plastic
4x4	S	TJ	106.0	28.0	11.2	2.7	HDPE Plastic
Navigator L							
4X2	S	TE	126.8	33.5	13.4	3.3	HDPE Plastic
4x4	S	TE	126.8	33.5	13.4	3.3	HDPE Plastic
Transit (Gasoline)	S	TG	96.5	25.5	10.2	2.3	HDPE Plastic
Transit (Diesel)	S	TD	93.9	24.8	9.9	2.3	HDPE Plastic
E-150 Regular Van	S	TR	125.7	33.2	13.3	3.3	HDPE Plastic
E-150 Regular Wagon	S	TR	125.7	33.2	13.3	3.3	HDPE Plastic
E-250 Regular/Super Van/Cutaway	S	TR	125.7	33.2	13.3	3.3	HDPE Plastic
E-350 Regular/Super Van	S	TR	125.7	33.2	13.3	3.3	HDPE Plastic
E-350 Regular/Super Wagon	S	TR	125.7	33.2	13.3	3.3	HDPE Plastic
E-350 Super Duty Stripped Chassis							
138" , 158" & 176"	S	TH	151.4	40.0	16.0	3.9	Steel
158" (N/A w/ 10,000 GVWR)	O	TM	208.2	55.0	22.0	5.6	Steel
E-350 Super Duty Cutaway							
138" Wide Frame	S	TR	125.7	33.2	13.3	3.3	HDPE Plastic
138", 158" & 176"	S	TH	151.4	40.0	16.0	3.9	Steel
158" (N/A w/ 10,000 GVWR)	O	TM	208.2	55.0	22.0	5.6	Steel
E-450 Super Duty Stripped Chassis							
158" & 176"	O	TH	151.4	40.0	16.0	3.9	Steel
158" & 176"	S	TM	208.2	55.0	22.0	5.6	Steel
E-450 Super Duty Cutaway							
158" & 176"	O	TH	151.4	40.0	16.0	3.9	Steel
158" & 176"	S	TM	208.2	55.0	22.0	5.6	Steel
Wide Frame Pickups (4X2 & 4X4)							
Long Pickup Box							
(Includes Pickup Box Deletes)							
F-250 / F-350 / F450							

2014 MY Fuel Tank Information

NOTE: Nominal Fuel Tank Capacity = Useable Refill Capacity

MODEL TYPE	S=Standard O=Optional AVAIL-ABILITY	TANK CODE	NOMINAL FUEL TANK CAPACITY Liters	NOMINAL FUEL TANK CAPACITY US Gallons	USEABLE 40% FILL US Gallons	VAPOR VOLUME CUBIC FT @ 40% FILL	TANK MATERIAL
Reg Cab 137"	S	TW	132.5	35.0	14.0	3.3	HDPE Plastic
Reg Cab 137" DIESEL ONLY	S	TY	98.4	26.0	10.4	2.3	HDPE Plastic
Super Cab 158"	S	TW	132.5	35.0	14.0	3.3	HDPE Plastic
Super Cab 158" DIESEL ONLY	S	TS	142.0	37.5	15.0	3.3	HDPE Plastic
Crew Cab 172.4"	S	TW	132.5	35.0	14.0	3.3	HDPE Plastic
Crew Cab 172.4" DIESEL ONLY	S	TS	142.0	37.5	15.0	3.3	HDPE Plastic
Short Pickup Box							
(Includes Pickup Box Deletes)							
F-250 / F-350							
Super Cab 141.8"	S	TW	132.5	35.0	14.0	3.3	HDPE Plastic
Super Cab 141.8" DIESEL ONLY	S	TY	98.4	26.0	10.4	2.3	HDPE Plastic
Crew Cab 156.2"	S	TW	132.5	35.0	14.0	3.3	HDPE Plastic
Crew Cab 156.2" DIESEL ONLY	S	TY	98.4	26.0	10.4	2.3	HDPE Plastic
Narrow Frame Chassis Cabs (4X2 & 4X4, Gas and Diesel)							
F-350							
Reg Cab 141"	S	SW	151.4	40.0	16.0	3.9	Steel
	O	SY(2)	106.0	28.0	11.2	2.7	Steel
	O	ST(3)	257.4	68.0	27.2	6.7	Steel
Reg Cab 165" DRW ONLY	S	SW	151.4	40.0	16.0	3.9	Steel
	O	SY(2)	106.0	28.0	11.2	2.7	Steel
	O	ST(3)	257.4	68.0	27.2	6.7	Steel
Super Cab 162"	S	SW	151.4	40.0	16.0	3.9	Steel
	O	SY(2)	106.0	28.0	11.2	2.7	Steel
	O	ST(3)	257.4	68.0	27.2	6.7	Steel
Crew Cab 176"	S	SW	151.4	40.0	16.0	3.9	Steel
	O	SY(2)	106.0	28.0	11.2	2.7	Steel
	O	ST(3)	257.4	68.0	27.2	6.7	Steel
(2) Optional in lieu of Standard w/DRW.							
(3) Dual Tanks (SW + SY) - Diesel DRW ONLY.							
F-450 / F-550							
Reg Cab 141"	S	SW	151.4	40.0	16.0	3.9	Steel
	O	SY(2)	106.0	28.0	11.2	2.7	Steel
	O	ST(3)	257.4	68.0	27.2	6.7	Steel
Reg Cab 165" DRW ONLY	S	SW	151.4	40.0	16.0	3.9	Steel
	O	SY(2)	106.0	28.0	11.2	2.7	Steel
	O	ST(3)	257.4	68.0	27.2	6.7	Steel
Reg Cab 189"	S	SW	151.4	40.0	16.0	3.9	Steel
	O	SY(4)	106.0	28.0	11.2	2.7	Steel
	O	ST(3)	257.4	68.0	27.2	6.7	Steel
Reg. Cab 201"	S	SW	151.4	40.0	16.0	3.9	Steel
	O	SY(2)	106.0	28.0	11.2	2.7	Steel
	O	ST(3)	257.4	68.0	27.2	6.7	Steel
Super Cab 162"	S	SW	151.4	40.0	16.0	3.9	Steel
	O	SY(2)	106.0	28.0	11.2	2.7	Steel
	O	ST(3)	257.4	68.0	27.2	6.7	Steel
Crew Cab 176"	S	SW	151.4	40.0	16.0	3.9	Steel
	O	SY(2)	106.0	28.0	11.2	2.7	Steel
	O	ST(3)	257.4	68.0	27.2	6.7	Steel
Crew Cab 200"	S	SW	151.4	40.0	16.0	3.9	Steel
	O	SY(4)	106.0	28.0	11.2	2.7	Steel
	O	ST(3)	257.4	68.0	27.2	6.7	Steel
(2) Optional in lieu of Standard w/DRW.							
(3) Dual Tanks (SW + SY) - Diesel DRW ONLY.							
(4) Diesel ONLY. In lieu of Standard w/DRW.							
F-53 Super Duty Class A Motor Home							
Stripped Chassis	S		308.5	81.5	32.6	8.7	Steel
F-59 Step Van	S		151.4	40.0	16.0	3.9	Steel
F-650 (6.8L ONLY)							
Reg. Cab / Super Cab	S		159.0	42.0	16.8	4.1	Steel
Reg. Cab / Super Cab	O		227.1	60.0	24.0	5.6	Steel

2014 MY Fuel Tank Temperature Profiles

FTTP Testing Information					Product Coverage		
Profile #[1,2,3]	Ending Fuel Temp (F)	Tank Capacity as Tested for FTTP (Gallons)	Fuel System Type	Heat Shield Size	Engine Size (Liters)	Vehicle Model Name	Certification Test Group(s)
XX07002	115.8	28.0	MRFS	Half	5.4L 3V FFV	Expedition / Expedition EL / Navigator / Navigator L / Limo	EFMXT05.44BC, EFMXT05.44HY, EFMXT05.45BR
XX07003	110.2	40.0	MRFS	Half	5.4L 2V FFV / 5.4L	Econoline Incomplete / Ambulance Package	EFMXE05.4AFD, EFMXE05.4AFF
XX07007	113.5	40.0	MRFS	Half	6.8L 2V	Econoline Incomplete, F-Series 650 Incomplete	EFMXE06.8BWX, EFMXE06.8AFA, EFMXE06.8BW5 (evap group EFMXF0265NAV)
XX07008	115.8	26.0	MRFS	Half	3.7L/5.0L FFV	F-150 FFV	EFMXT03.73DP, EFMXT05.03D7
XX07306	116.6	18.6	MRFS	Half	3.7L, 3.5L	Taurus, Police Interceptor Sedan, MKS, Flex, MKT, MKT Limo/Hearse, Explorer, Police Interceptor Utility	EFMXV03.7VE8 (evap group EFMXR0145GBV), EFMXV03.7VHJ, EFMXT03.73E8
XX08025	121.1	19.0	MRFS	Partial	3.5L GTDI	Taurus, MKS, Flex, MKT, Explorer	EFMXV03.5VEP
XX08043	112.5	35.0	MRFS	Partial	6.2L FFV	F Series Superduty Complete / Box Delete	EFMXT06.27HL
XX08045	113.5	28.5	MRFS	Partial	6.8L	F-Series 4/550 F59 Step Van Incomplete	EFMXE06.8BW5 (evap group EFMXF0265NAT)
XX09001	112.1	16.0	MRFS	Partial	3.7L	Mustang	EFMXV03.7VDT
XX09004	120.6	16.0	MRFS	Full	5.0L	Mustang GT Automatic	EFMXV05.0VD5
XX09007	117.1	35.0	MRFS	Partial	5.4L FFV, 6.8L	Econoline Complete	EFMXT05.45HL, EFMXT06.85HT, EFMXT05.45HK
XX09008	115.5	28.9	MRFS	Half	6.2L FFV	F Series Superduty Incomplete	EFMXT06.27HL
XX09012	115.3	18.0	MRFS	3/4	2.0L GTDI, 3.5L, 3.7L	Edge, MKX	EFMXT03.72EE, EFMXT02.02EC (evap group EFMXR0145ABB)
XX09016	118.2	35.0	MRFS	Half	6.2L	F-150 Raptor / Harley / Lariat	EFMXT06.24D2
XX09300	107.2	81.0	MRFS	None	6.8L	Motorhome F53	EFMXE06.8BW5 (evap group EFMXF0415GET)
XX10009	120.0	26.0	MRFS	Partial	3.5L	F-150 GTDI	EFMXT03.54DX
XX10014	116.7	12.5	SMRFS	Partial	2.0L	Focus PZEV (non-FFV)	EFMXV02.0VZ2
XX10015	113.3	19.0	MRFS	Full	3.5L/3.7	Taurus/Police Interceptor Sedan - FFV/Explorer/ Police Interceptor Utility	EFMXV03.7VEA, EFMXT03.73DM
XX11008	111.8	19.0	ERFS	Partial	2.0L GTDI	MKT Livery GTDI, Explorer GTDI, Taurus GTDI, Special Service Police	EFMXV02.0VE7, EFMXT02.02EC (evap group EFMXR0145GBV)
XX11009	111.3	14.6	SMRFS	Full	2.5L, 2.0L/1.6L GTDI	Escape	EFMXV02.5VEX, EFMXT02.52ET, EFMXT02.02E1, EFMXT01.62E9
XX11010	121.6	12.4	SMRFS	Partial	2.0L FFV / 2.0L GTDI	Focus FFV, Focus ST	EFMXV02.0VD2, EFMXV02.0VER
XX11018	116.0	16.0	ERFS	Partial	5.8L	Mustang Shelby GT500 Manual	EFMXV05.8VE2
XX11022	116.8	16.5	SMRFS	Full	1.5L GTDI	Fusion PZEV, non-PZEV	EFMXV01.5VDG, EFMXV01.5VZ1
XX11024	118.9	17.5	SMRFS	Full	1.6L GTDI, 2.0L GTDI, 2.5L, 3.7L	Fusion/MKZ Non-PZEV	EFMXV01.6VDF, EFMXV02.0VEY, EFMXV02.5VEX, EFMXV03.7VE8 (evap group EFMXR0125NBV)
XX11025	114.8	13.5	SMRFS	Full	2.0L	C-Max/Fusion/MKZ FHEV	EFMXV02.0VZL
[1]XX11302	121.4	14.0	MRFS	Half	2.0L	C-Max/Fusion PHEV	EFMXV02.0VZP
XX12008	122.3	12.4	ERFS	Partial	1.6L GTDI, 1.0L GTDI	Fiesta ST, non-ST	EFMXV01.0VD1, EFMXV01.6VDD
XX12011	122	12.4	ERFS	Partial	1.6L	Fiesta	EFMXV01.6VDC
XX12013	114.1	15.85	SMRFS	Full	1.6L GTDI, 2.5L	Transit Connect	EFMXT01.62D7, EFMXT02.52D8
XX12014	114.6	25.5	MRFS	Partial	3.7L FFV	Transit	EFMXT03.76BF, EFMXT03.75HF
13001	111.2	25.5	MRFS	Partial	3.5L GTDI	Transit	EFMXT03.55HV, EFMXT03.56BT, EFMXT03.57BT

Footnotes: 1) FTTP profile uses CARB Temperatures (105°F start temperature).

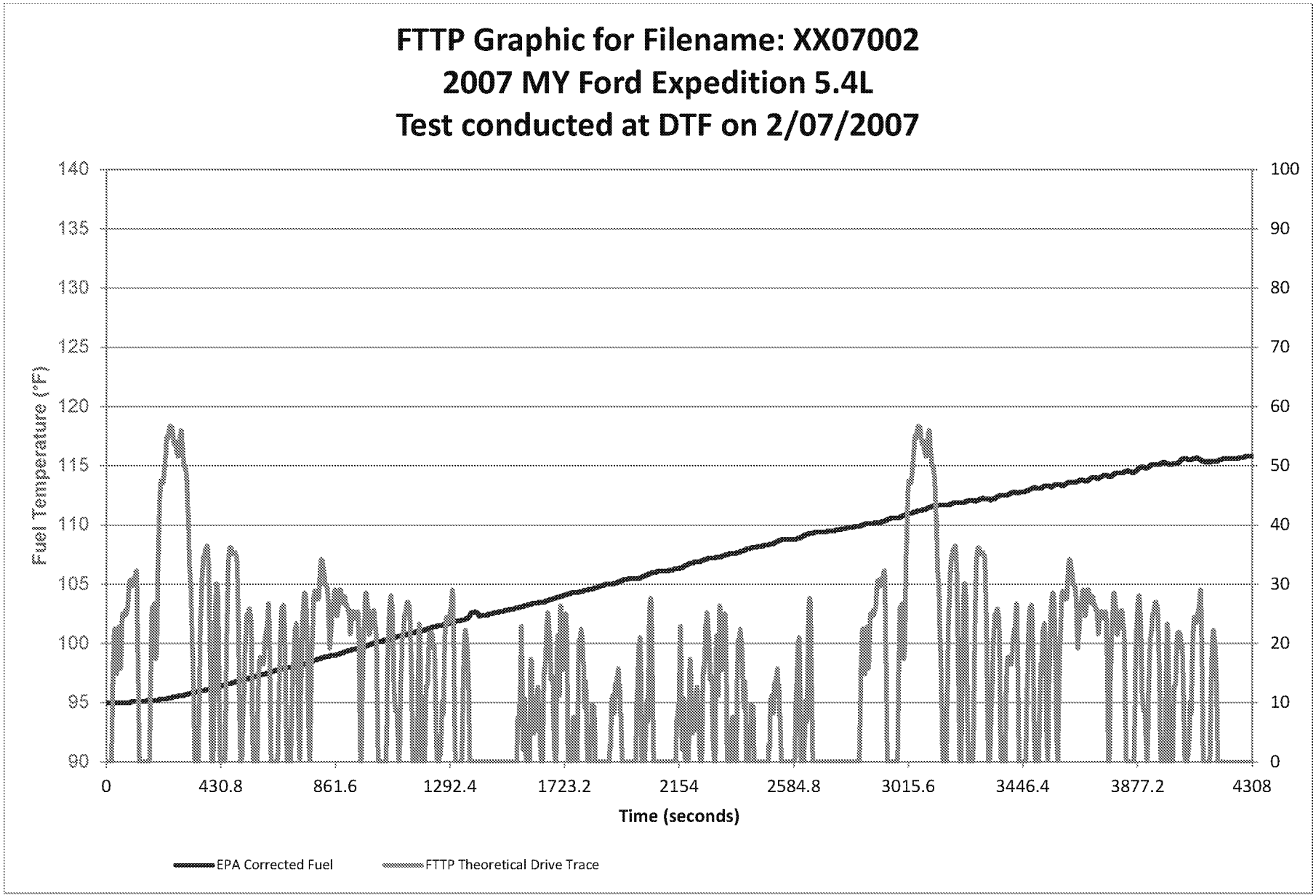
FTTP Graphic for Filename: XX07002
2007 MY Ford Expedition 5.4L
Test conducted at DTF on 2/07/2007
Fuel Temperature (°F)
140
135
130
125
120
115
110
105
100
95
90
100
90
80
70
60
50
40
30
20
10
0
0
430.8
861.6
1292.4
1723.2
2154
2584.8
3015.6
3446.4
3877.2
4308
Time (seconds)
EPA Corrected Fuel
FTTP Theoretical Drive Trace

FTTP for Filename: XX07002

Time Sec	Trace Speed MPH	EPA Fuel Temp °F
1	0.0	95.0
61	24.8	95.0
121	10.3	95.1
181	26.8	95.2
241	56.6	95.4
301	48.3	95.7
361	31.9	96.0
421	23.2	96.4
481	35.1	96.7
541	25.0	97.1
601	22.2	97.5
661	26.1	97.9
721	10.4	98.1
781	28.2	98.6
841	19.7	99.0
901	26.5	99.3
961	7.1	99.7
1021	2.5	100.2
1081	13.5	100.5
1141	25.0	100.9
1201	11.0	101.2
1261	7.2	101.5
1321	0.0	101.9
1381	0.0	102.6
1441	0.0	102.5
1501	0.0	102.8
1561	21.7	103.1
1621	12.1	103.4
1681	8.0	103.8
1741	0.0	104.2
1801	12.8	104.5
1861	0.0	104.9
1921	14.3	105.2
1981	0.0	105.5
2041	22.8	105.9
2101	0.0	106.1
2161	14.5	106.4
2221	12.3	106.9
2281	3.7	107.2
2341	0.0	107.6
2401	12.3	107.9
2461	0.0	108.2
2521	15.1	108.6
2581	0.0	108.8
2641	26.0	109.3
2701	0.0	109.4
2761	0.0	109.6
2821	0.0	109.9
2881	24.6	110.1
2941	0.0	110.5
3001	19.4	110.9
3061	55.9	111.2
3121	39.3	111.6
3181	34.6	111.8
3241	0.0	112.1
3301	34.7	112.2
3361	8.1	112.5
3421	26.3	112.7
3481	24.5	113.1
3541	5.0	113.3
3601	28.3	113.4
3661	25.5	113.8
3721	25.6	114.0
3781	22.5	114.2
3841	0.0	114.6
3901	8.7	114.9
3961	8.9	115.1
4021	14.8	115.2
4081	12.6	115.5
4141	0.0	115.4
4201	0.0	115.6
4261	0.0	115.7
4308	0.0	115.8

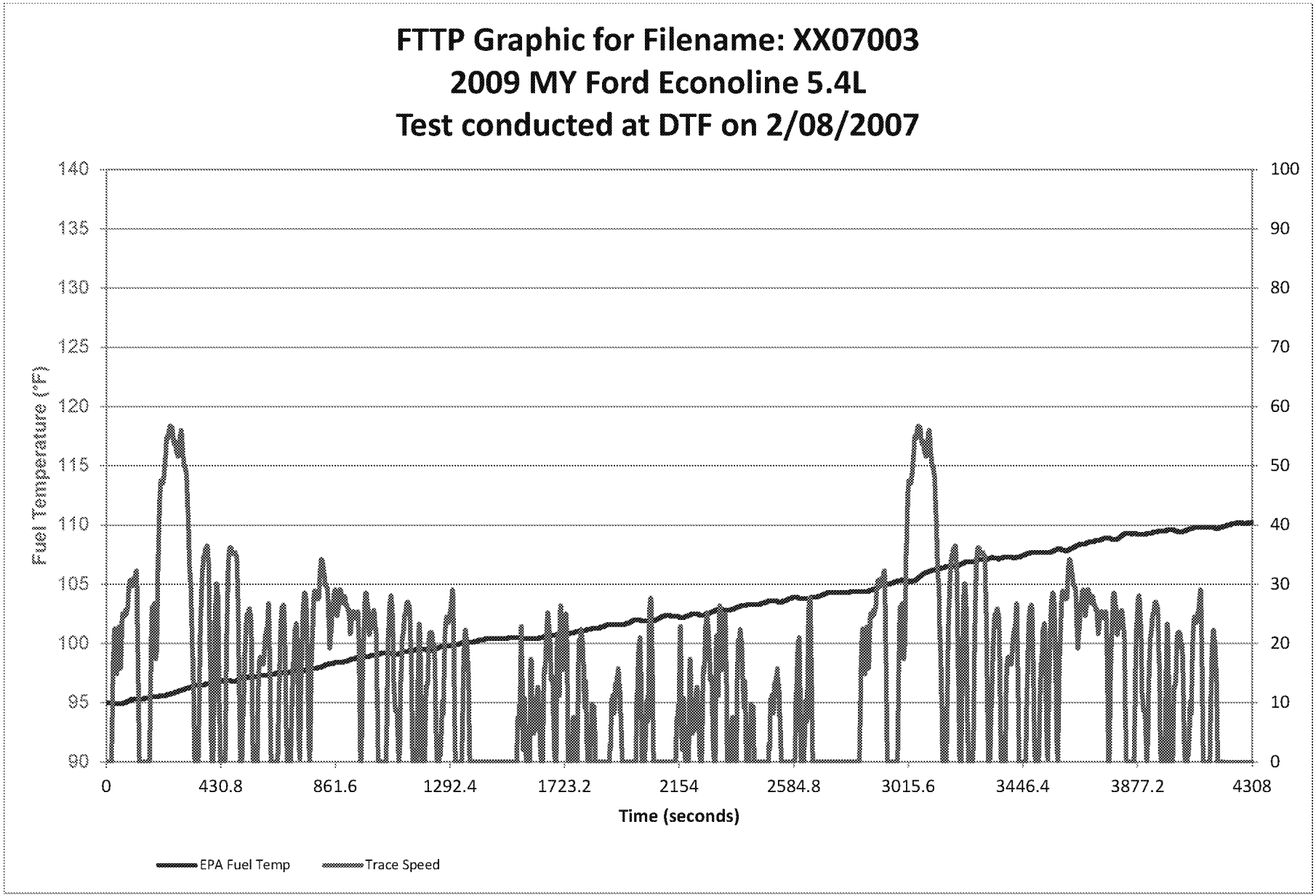
FTTP Graphic for Filename: XX07003
2009 MY Ford Econoline 5.4L
Test conducted at DTF on 2/08/2007
Fuel Temperature (°F)
140
135
130
125
120
115
110
105
100
95
90
100
90
80
70
60
50
40
30
20
10
0
0
430.8
861.6
1292.4
1723.2
2154
2584.8
3015.6
3446.4
3877.2
4308
Time (seconds)
EPA Fuel Temp
Trace Speed

Time Sec	Trace Speed MPH	EPA Fuel Temp °F
1	0.0	95.0
61	24.8	94.9
121	10.3	95.3
181	26.8	95.5
241	56.6	95.7
301	48.3	96.2
361	31.9	96.5
421	23.2	96.8
481	35.1	96.8
541	25.0	97.1
601	22.2	97.3
661	26.1	97.5
721	10.4	97.7
781	28.2	97.9
841	19.7	98.3
901	26.5	98.5
961	7.1	98.9
1021	2.5	99.1
1081	13.5	99.1
1141	25.0	99.4
1201	11.0	99.5
1261	7.2	99.8
1321	0.0	99.9
1381	0.0	100.1
1441	0.0	100.4
1501	0.0	100.4
1561	21.7	100.5
1621	12.1	100.4
1681	8.0	100.7
1741	0.0	100.9
1801	12.8	101.1
1861	0.0	101.4
1921	14.3	101.6
1981	0.0	101.9
2041	22.8	101.9
2101	0.0	102.4
2161	14.5	102.2
2221	12.3	102.5
2281	3.7	102.7
2341	0.0	102.8
2401	12.3	103.2
2461	0.0	103.4
2521	15.1	103.6
2581	0.0	103.9
2641	26.0	103.8
2701	0.0	104.2
2761	0.0	104.3
2821	0.0	104.4
2881	24.6	104.6
2941	0.0	105.0
3001	19.4	105.3
3061	55.9	105.7
3121	39.3	106.3
3181	34.6	106.5
3241	0.0	106.9
3301	34.7	107.1
3361	8.1	107.2
3421	26.3	107.3
3481	24.5	107.7
3541	5.0	107.7
3601	28.3	107.9
3661	25.5	108.4
3721	25.6	108.7
3781	22.5	108.8
3841	0.0	109.3
3901	8.7	109.2
3961	8.9	109.5
4021	14.8	109.5
4081	12.6	109.7
4141	0.0	109.8
4201	0.0	109.9
4261	0.0	110.2
4308	0.0	110.2

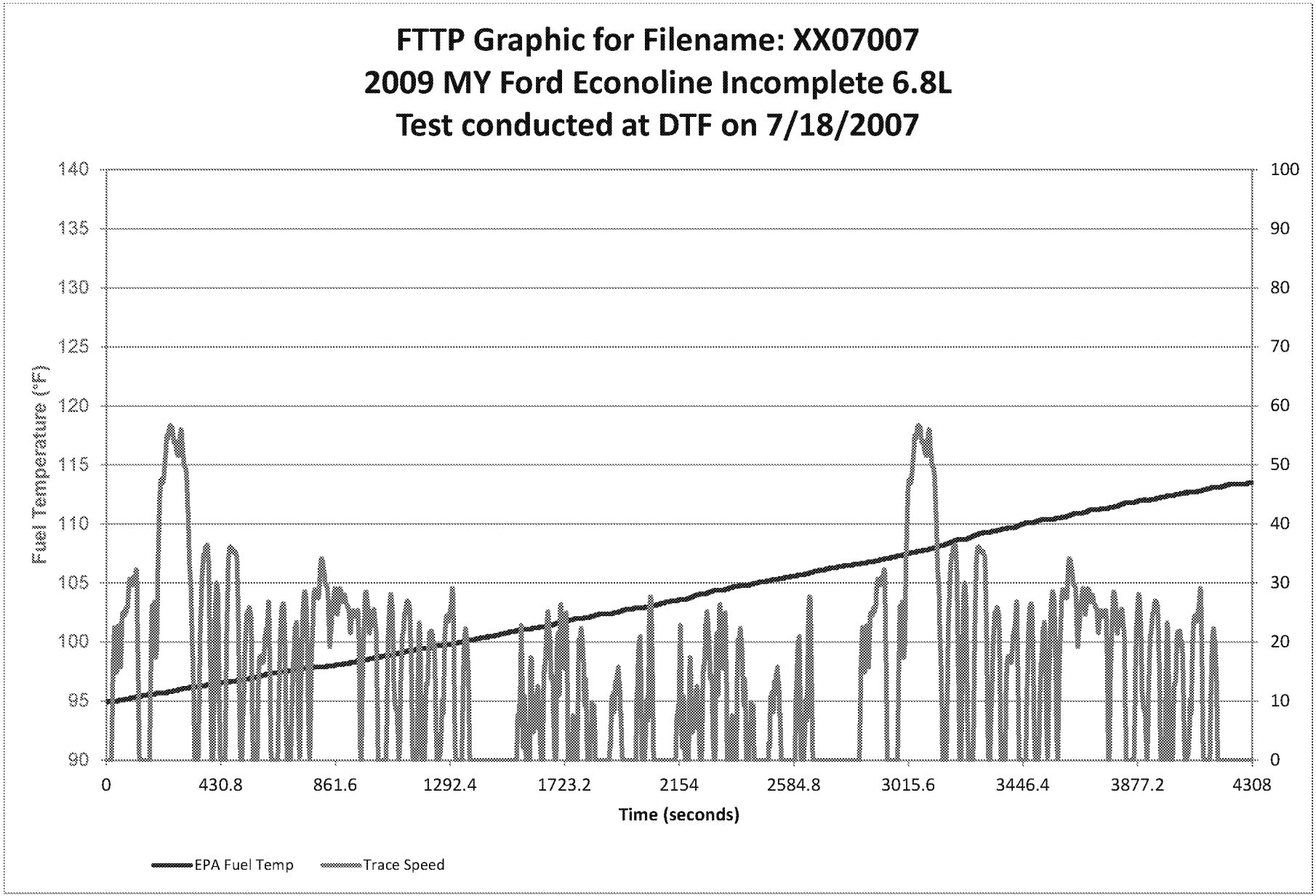
FTTP Graphic for Filename: XX07007
2009 MY Ford Econoline Incomplete 6.8L
Test conducted at DTF on 7/18/2007
Fuel Temperature (°F)
140
135
130
125
120
115
110
105
100
95
90
100
90
80
70
60
50
40
30
20
10
0
0
430.8
861.6
1292.4
1723.2
2154
2584.8
3015.6
3446.4
3877.2
4308
Time (seconds)
EPA Fuel Temp
Trace Speed

Time Sec	Trace Speed MPH	EPA Fuel Temp °F
1	0.0	95.0
61	24.8	95.1
121	10.3	95.4
181	26.8	95.6
241	56.6	95.8
301	48.3	96.1
361	31.9	96.3
421	23.2	96.5
481	35.1	96.7
541	25.0	97.0
601	22.2	97.3
661	26.1	97.5
721	10.4	97.7
781	28.2	97.9
841	19.7	98.0
901	26.5	98.2
961	7.1	98.5
1021	2.5	98.7
1081	13.5	98.9
1141	25.0	99.3
1201	11.0	99.5
1261	7.2	99.7
1321	0.0	99.9
1381	0.0	100.2
1441	0.0	100.5
1501	0.0	100.8
1561	21.7	101.1
1621	12.1	101.2
1681	8.0	101.5
1741	0.0	101.9
1801	12.8	102.1
1861	0.0	102.4
1921	14.3	102.5
1981	0.0	102.8
2041	22.8	103.0
2101	0.0	103.4
2161	14.5	103.6
2221	12.3	104.0
2281	3.7	104.3
2341	0.0	104.6
2401	12.3	104.8
2461	0.0	105.1
2521	15.1	105.3
2581	0.0	105.6
2641	26.0	105.8
2701	0.0	106.1
2761	0.0	106.4
2821	0.0	106.6
2881	24.6	106.8
2941	0.0	107.1
3001	19.4	107.4
3061	55.9	107.7
3121	39.3	108.1
3181	34.6	108.5
3241	0.0	108.8
3301	34.7	109.3
3361	8.1	109.5
3421	26.3	109.8
3481	24.5	110.1
3541	5.0	110.4
3601	28.3	110.6
3661	25.5	110.9
3721	25.6	111.2
3781	22.5	111.4
3841	0.0	111.8
3901	8.7	112.0
3961	8.9	112.2
4021	14.8	112.5
4081	12.6	112.7
4141	0.0	113.0
4201	0.0	113.2
4261	0.0	113.4
4308	0.0	113.5

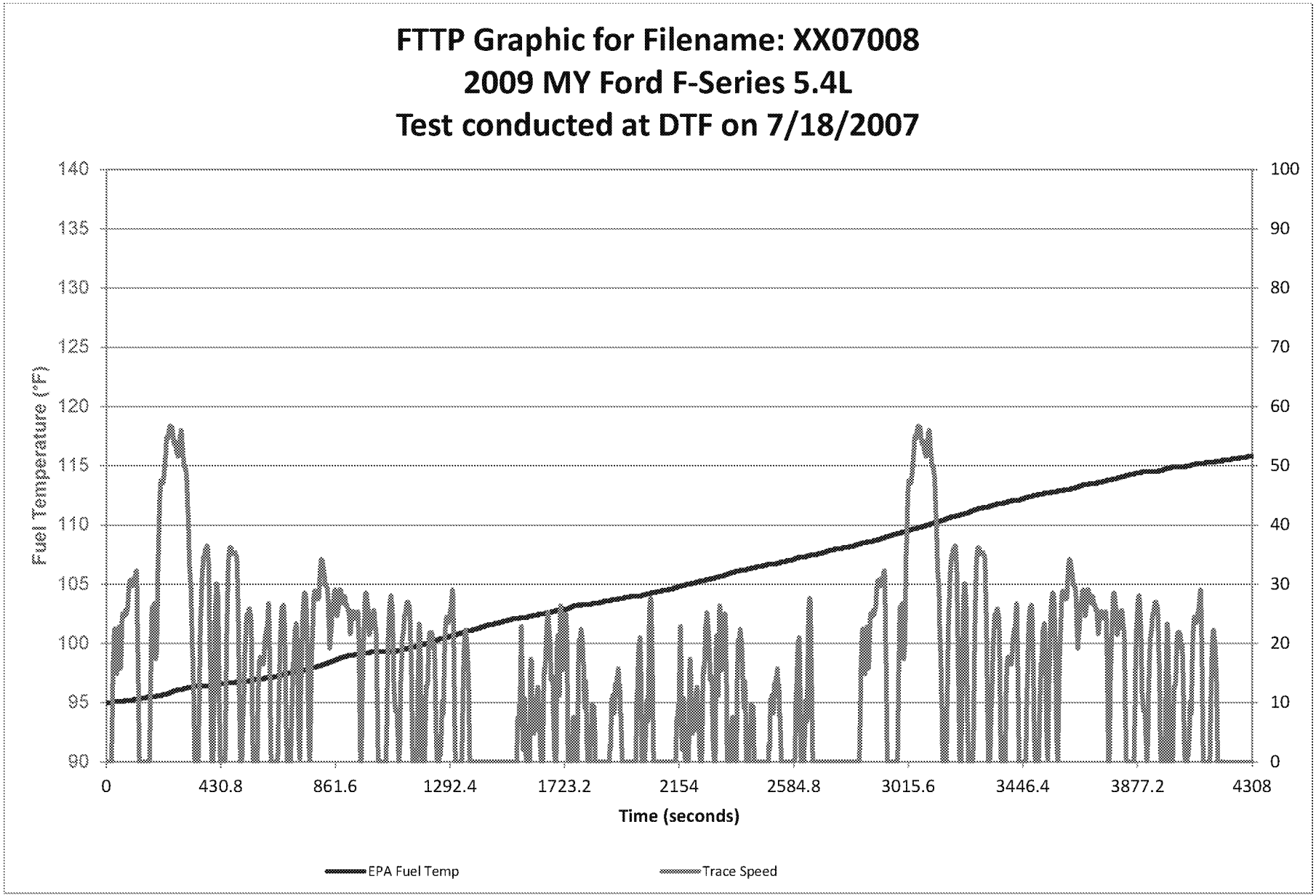
FTTP Graphic for Filename: XX07008
2009 MY Ford F-Series 5.4L
Test conducted at DTF on 7/18/2007
Fuel Temperature (°F)
140
135
130
125
120
115
110
105
100
95
90
100
90
80
70
60
50
40
30
20
10
0
0
430.8
861.6
1292.4
1723.2
2154
2584.8
3015.6
3446.4
3877.2
4308
Time (seconds)
EPA Fuel Temp
Trace Speed

Time Sec	Trace Speed MPH	EPA Fuel Temp °F
1	0.0	95.0
61	24.8	95.1
121	10.3	95.3
181	26.8	95.5
241	56.6	95.9
301	48.3	96.2
361	31.9	96.4
421	23.2	96.6
481	35.1	96.7
541	25.0	96.9
601	22.2	97.1
661	26.1	97.4
721	10.4	97.6
781	28.2	98.0
841	19.7	98.4
901	26.5	98.9
961	7.1	99.2
1021	2.5	99.3
1081	13.5	99.3
1141	25.0	99.6
1201	11.0	100.0
1261	7.2	100.4
1321	0.0	100.8
1381	0.0	101.2
1441	0.0	101.6
1501	0.0	101.9
1561	21.7	102.2
1621	12.1	102.4
1681	8.0	102.7
1741	0.0	103.0
1801	12.8	103.3
1861	0.0	103.5
1921	14.3	103.7
1981	0.0	104.0
2041	22.8	104.2
2101	0.0	104.5
2161	14.5	104.8
2221	12.3	105.2
2281	3.7	105.5
2341	0.0	105.9
2401	12.3	106.2
2461	0.0	106.5
2521	15.1	106.8
2581	0.0	107.1
2641	26.0	107.4
2701	0.0	107.7
2761	0.0	108.0
2821	0.0	108.3
2881	24.6	108.6
2941	0.0	109.0
3001	19.4	109.4
3061	55.9	109.8
3121	39.3	110.2
3181	34.6	110.7
3241	0.0	111.1
3301	34.7	111.5
3361	8.1	111.8
3421	26.3	112.1
3481	24.5	112.4
3541	5.0	112.7
3601	28.3	113.0
3661	25.5	113.3
3721	25.6	113.5
3781	22.5	113.8
3841	0.0	114.2
3901	8.7	114.5
3961	8.9	114.6
4021	14.8	114.9
4081	12.6	115.1
4141	0.0	115.3
4201	0.0	115.5
4261	0.0	115.7
4308	0.0	115.8

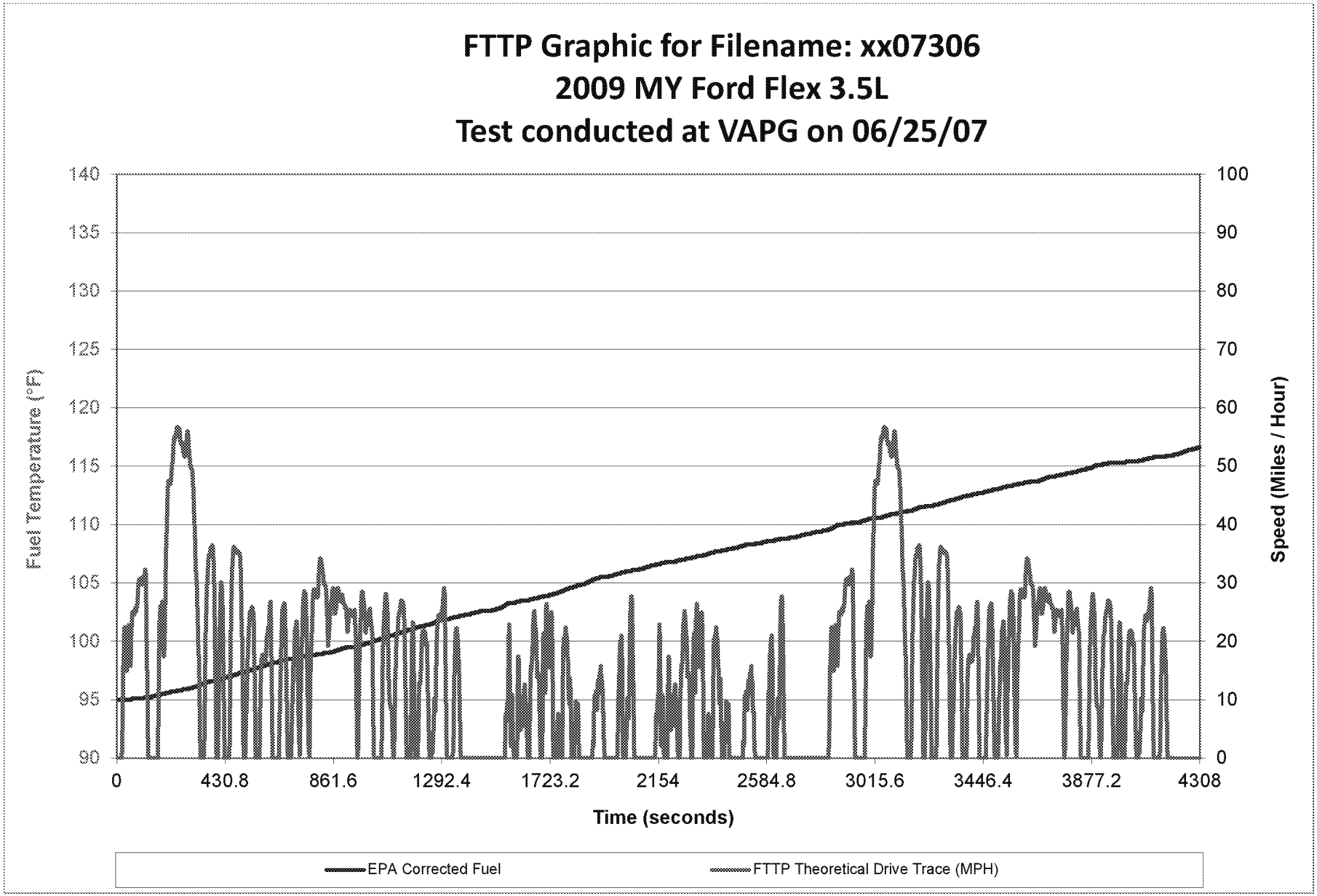
FTTP Graphic for Filename: xx07306
2009 MY Ford Flex 3.5L
Test conducted at VAPG on 06/25/07
Fuel Temperature (°F)
140
135
130
125
120
115
110
105
100
95
90
Speed (Miles / Hour)
100
90
80
70
60
50
40
30
20
10
0
0
430.8
861.6
1292.4
1723.2
2154
2584.8
3015.6
3446.4
3877.2
4308
Time (seconds)
EPA Corrected Fuel
FTTP Theoretical Drive Trace (MPH)

FTTP for Filename: xx07306

Time Sec	Trace Speed MPH	EPA Fuel Temp °F
1	0.0	95.0
61	24.8	95.1
121	10.3	95.2
181	26.8	95.5
241	56.6	95.8
301	48.3	96.0
361	31.9	96.5
421	23.2	96.8
481	35.1	97.2
541	25.0	97.6
601	22.2	98.0
661	26.1	98.4
721	10.4	98.6
781	28.2	98.8
841	19.7	99.0
901	26.5	99.4
961	7.1	99.6
1021	2.5	100.0
1081	13.5	100.4
1141	25.0	100.8
1201	11.0	101.2
1261	7.2	101.6
1321	0.0	101.9
1381	0.0	102.2
1441	0.0	102.5
1501	0.0	102.7
1561	21.7	103.3
1621	12.1	103.5
1681	8.0	103.8
1741	0.0	104.1
1801	12.8	104.6
1861	0.0	104.9
1921	14.3	105.5
1981	0.0	105.7
2041	22.8	106.0
2101	0.0	106.3
2161	14.5	106.6
2221	12.3	106.8
2281	3.7	107.1
2341	0.0	107.4
2401	12.3	107.7
2461	0.0	108.0
2521	15.1	108.3
2581	0.0	108.5
2641	26.0	108.8
2701	0.0	108.9
2761	0.0	109.2
2821	0.0	109.5
2881	24.6	110.0
2941	0.0	110.2
3001	19.4	110.5
3061	55.9	110.8
3121	39.3	111.1
3181	34.6	111.4
3241	0.0	111.6
3301	34.7	112.0
3361	8.1	112.3
3421	26.3	112.6
3481	24.5	112.9
3541	5.0	113.3
3601	28.3	113.5
3661	25.5	113.7
3721	25.6	114.1
3781	22.5	114.4
3841	0.0	114.7
3901	8.7	115.1
3961	8.9	115.3
4021	14.8	115.4
4081	12.6	115.5
4141	0.0	115.8
4201	0.0	115.9
4261	0.0	116.4
4308	0.0	116.6

FTTP Graphic for Filename: XX08025
2010 MY Ford MKS GTDI 3.5L
Test conducted at DTF on 6/26/2008

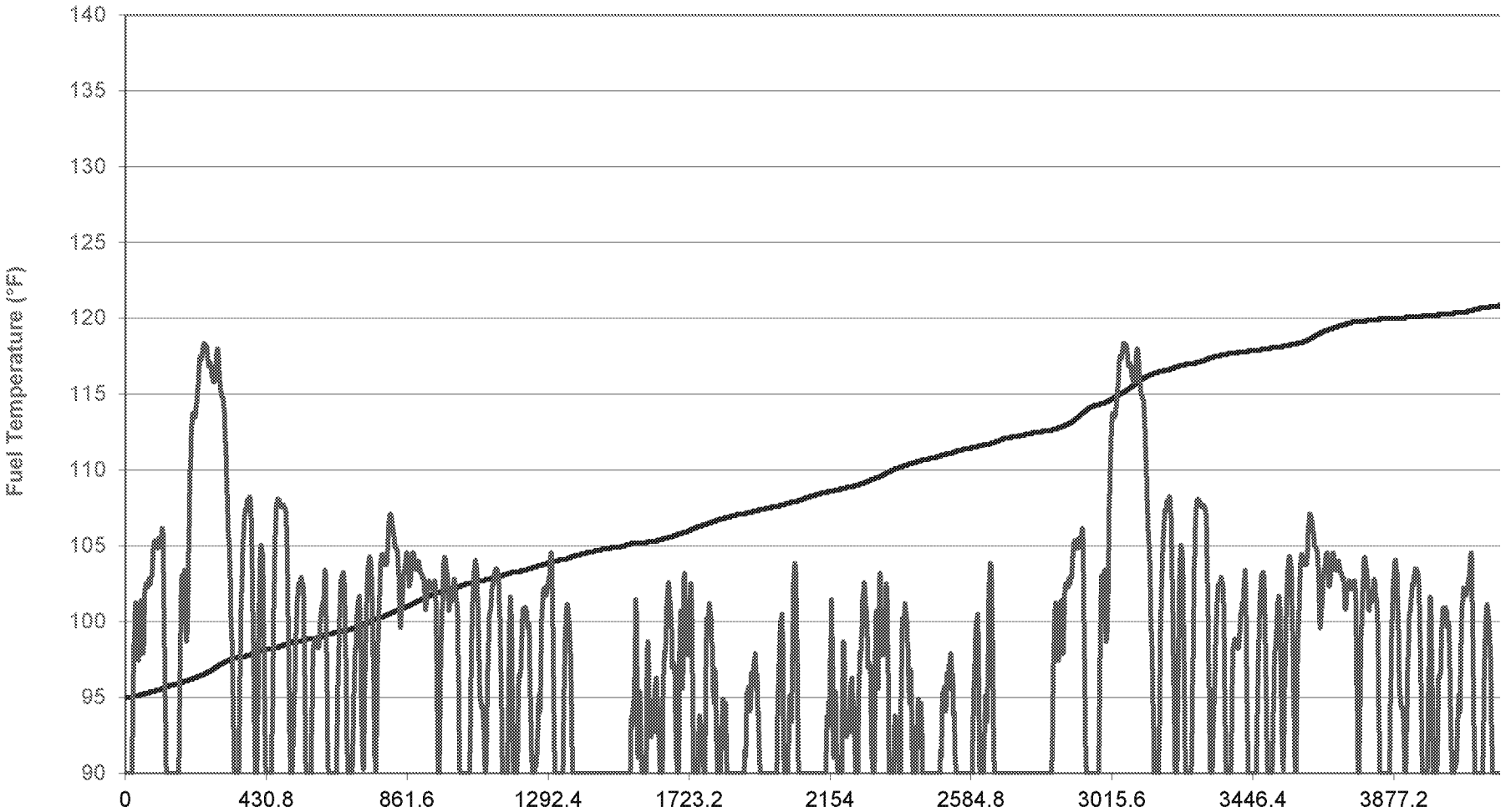

Graphic printed on:
5/31/2013

Filename: 14MY_12.02.02.00 FTTP Profiles_plots_only.xlsx
Tab:08025 Chart

Time Sec	Trace Speed MPH	EPA Fuel Temp °F
1	0.0	95.0
61	24.8	95.3
121	10.3	95.7
181	26.8	96.1
241	56.6	96.6
301	48.3	97.3
361	31.9	97.7
421	23.2	98.1
481	35.1	98.4
541	25.0	98.8
601	22.2	99.0
661	26.1	99.4
721	10.4	99.8
781	28.2	100.3
841	19.7	100.8
901	26.5	101.4
961	7.1	102.0
1021	2.5	102.3
1081	13.5	102.7
1141	25.0	103.0
1201	11.0	103.3
1261	7.2	103.7
1321	0.0	104.0
1381	0.0	104.4
1441	0.0	104.7
1501	0.0	104.9
1561	21.7	105.2
1621	12.1	105.3
1681	8.0	105.7
1741	0.0	106.2
1801	12.8	106.6
1861	0.0	107.0
1921	14.3	107.3
1981	0.0	107.6
2041	22.8	107.9
2101	0.0	108.3
2161	14.5	108.6
2221	12.3	108.9
2281	3.7	109.4
2341	0.0	110.0
2401	12.3	110.4
2461	0.0	110.8
2521	15.1	111.1
2581	0.0	111.4
2641	26.0	111.7
2701	0.0	112.1
2761	0.0	112.4
2821	0.0	112.6
2881	24.6	113.0
2941	0.0	114.0
3001	19.4	114.5
3061	55.9	115.3
3121	39.3	116.2
3181	34.6	116.6
3241	0.0	117.0
3301	34.7	117.3
3361	8.1	117.6
3421	26.3	117.8
3481	24.5	118.0
3541	5.0	118.2
3601	28.3	118.5
3661	25.5	119.1
3721	25.6	119.6
3781	22.5	119.8
3841	0.0	120.0
3901	8.7	120.0
3961	8.9	120.1
4021	14.8	120.3
4081	12.6	120.4
4141	0.0	120.7
4201	0.0	120.8
4261	0.0	121.0
4308	0.0	121.1

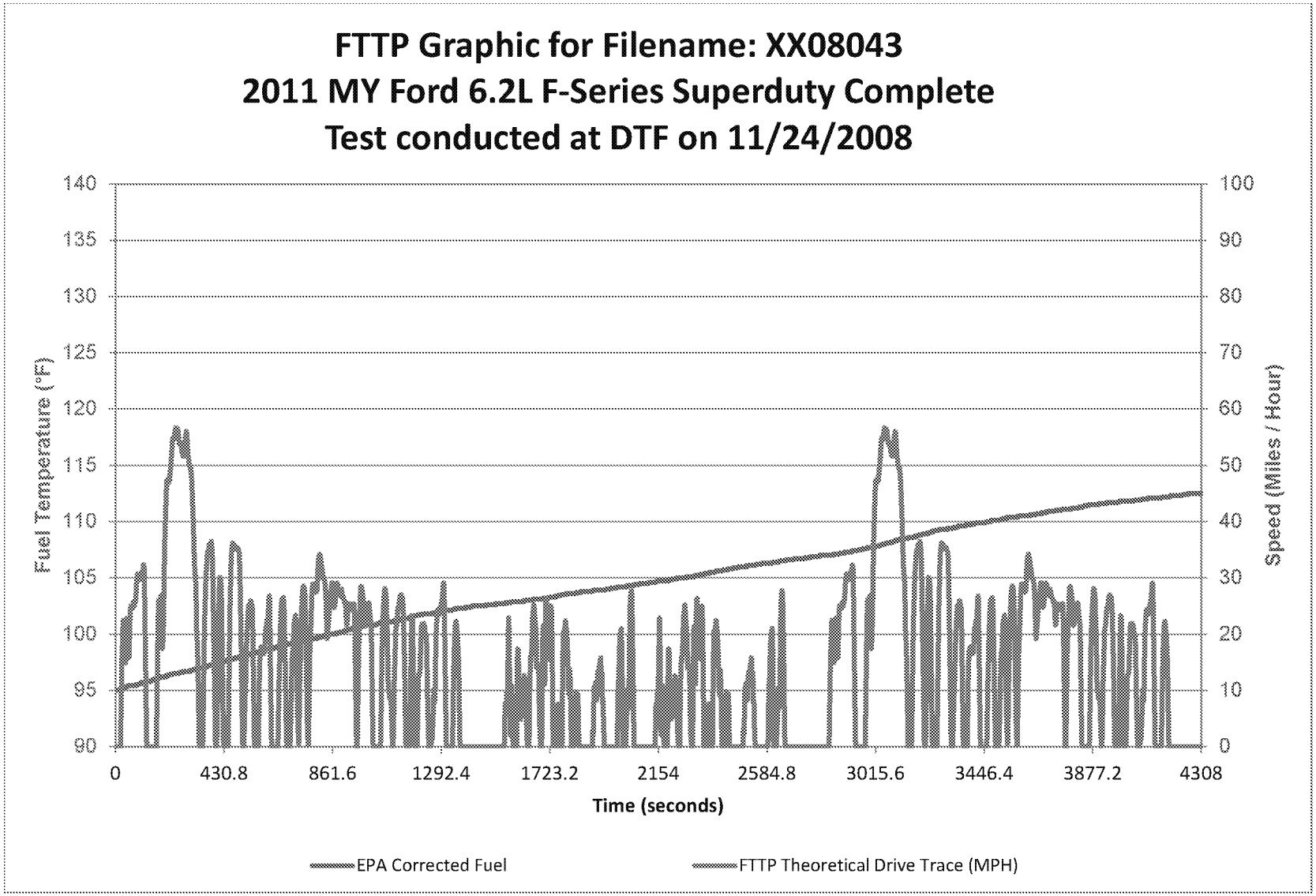
FTTP Graphic for Filename: XX08043
2011 MY Ford 6.2L F-Series Superduty Complete
Test conducted at DTF on 11/24/2008
Fuel Temperature (°F)
Speed (Miles / Hour)
Time (seconds)
140
135
130
125
120
115
110
105
100
95
90
100
90
80
70
60
50
40
30
20
10
0
0
430.8
861.6
1292.4
1723.2
2154
2584.8
3015.6
3446.4
3877.2
4308
EPA Corrected Fuel
FTTP Theoretical Drive Trace (MPH)

Time Sec	Trace Speed MPH	EPA Fuel Temp °F
1	0.0	95.0
61	24.8	95.4
121	10.3	95.8
181	26.8	96.2
241	56.6	96.5
301	48.3	96.8
361	31.9	97.1
421	23.2	97.5
481	35.1	97.9
541	25.0	98.3
601	22.2	98.7
661	26.1	99.0
721	10.4	99.3
781	28.2	99.6
841	19.7	99.9
901	26.5	100.2
961	7.1	100.6
1021	2.5	100.8
1081	13.5	101.1
1141	25.0	101.4
1201	11.0	101.7
1261	7.2	101.9
1321	0.0	102.1
1381	0.0	102.3
1441	0.0	102.5
1501	0.0	102.6
1561	21.7	102.8
1621	12.1	102.9
1681	8.0	103.1
1741	0.0	103.3
1801	12.8	103.6
1861	0.0	103.8
1921	14.3	103.9
1981	0.0	104.1
2041	22.8	104.3
2101	0.0	104.5
2161	14.5	104.7
2221	12.3	104.9
2281	3.7	105.1
2341	0.0	105.4
2401	12.3	105.6
2461	0.0	105.9
2521	15.1	106.1
2581	0.0	106.3
2641	26.0	106.5
2701	0.0	106.7
2761	0.0	106.9
2821	0.0	107.0
2881	24.6	107.2
2941	0.0	107.4
3001	19.4	107.7
3061	55.9	108.1
3121	39.3	108.5
3181	34.6	108.7
3241	0.0	109.1
3301	34.7	109.4
3361	8.1	109.6
3421	26.3	109.9
3481	24.5	110.1
3541	5.0	110.4
3601	28.3	110.5
3661	25.5	110.7
3721	25.6	110.9
3781	22.5	111.1
3841	0.0	111.4
3901	8.7	111.6
3961	8.9	111.7
4021	14.8	111.8
4081	12.6	112.0
4141	0.0	112.1
4201	0.0	112.3
4261	0.0	112.5
4308	0.0	112.5

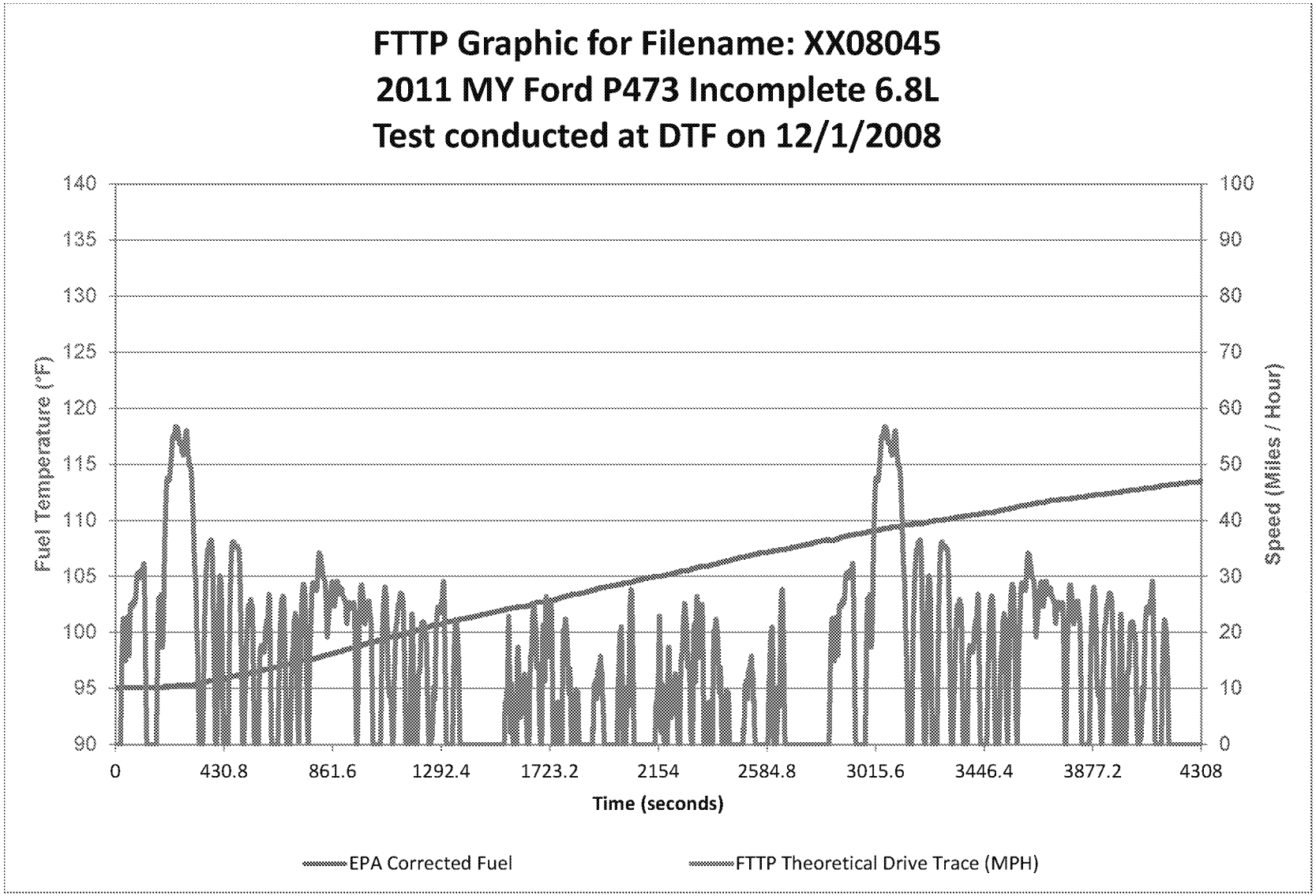
FTTP Graphic for Filename: XX08045
2011 MY Ford P473 Incomplete 6.8L
Test conducted at DTF on 12/1/2008
Fuel Temperature (°F)
Speed (Miles / Hour)
Time (seconds)
140
135
130
125
120
115
110
105
100
95
90
100
90
80
70
60
50
40
30
20
10
0
0
430.8
861.6
1292.4
1723.2
2154
2584.8
3015.6
3446.4
3877.2
4308
EPA Corrected Fuel
FTTP Theoretical Drive Trace (MPH)

FTTP for Filename: XX0845

Time Sec	Trace Speed MPH	EPA Fuel Temp °F
1	0.0	95.0
61	24.8	95.1
121	10.3	95.1
181	26.8	95.1
241	56.6	95.2
301	48.3	95.3
361	31.9	95.6
421	23.2	95.8
481	35.1	96.2
541	25.0	96.4
601	22.2	96.7
661	26.1	97.0
721	10.4	97.4
781	28.2	97.6
841	19.7	98.0
901	26.5	98.4
961	7.1	98.7
1021	2.5	99.1
1081	13.5	99.5
1141	25.0	99.8
1201	11.0	100.2
1261	7.2	100.7
1321	0.0	101.0
1381	0.0	101.2
1441	0.0	101.5
1501	0.0	101.8
1561	21.7	102.1
1621	12.1	102.3
1681	8.0	102.7
1741	0.0	102.9
1801	12.8	103.3
1861	0.0	103.5
1921	14.3	103.9
1981	0.0	104.2
2041	22.8	104.4
2101	0.0	104.8
2161	14.5	105.0
2221	12.3	105.3
2281	3.7	105.6
2341	0.0	105.9
2401	12.3	106.2
2461	0.0	106.6
2521	15.1	106.9
2581	0.0	107.1
2641	26.0	107.4
2701	0.0	107.6
2761	0.0	107.9
2821	0.0	108.2
2881	24.6	108.5
2941	0.0	108.8
3001	19.4	109.1
3061	55.9	109.3
3121	39.3	109.5
3181	34.6	109.7
3241	0.0	109.9
3301	34.7	110.1
3361	8.1	110.3
3421	26.3	110.5
3481	24.5	110.7
3541	5.0	111.0
3601	28.3	111.3
3661	25.5	111.6
3721	25.6	111.8
3781	22.5	111.9
3841	0.0	112.1
3901	8.7	112.3
3961	8.9	112.5
4021	14.8	112.7
4081	12.6	112.8
4141	0.0	113.0
4201	0.0	113.2
4261	0.0	113.4
4308	0.0	113.5

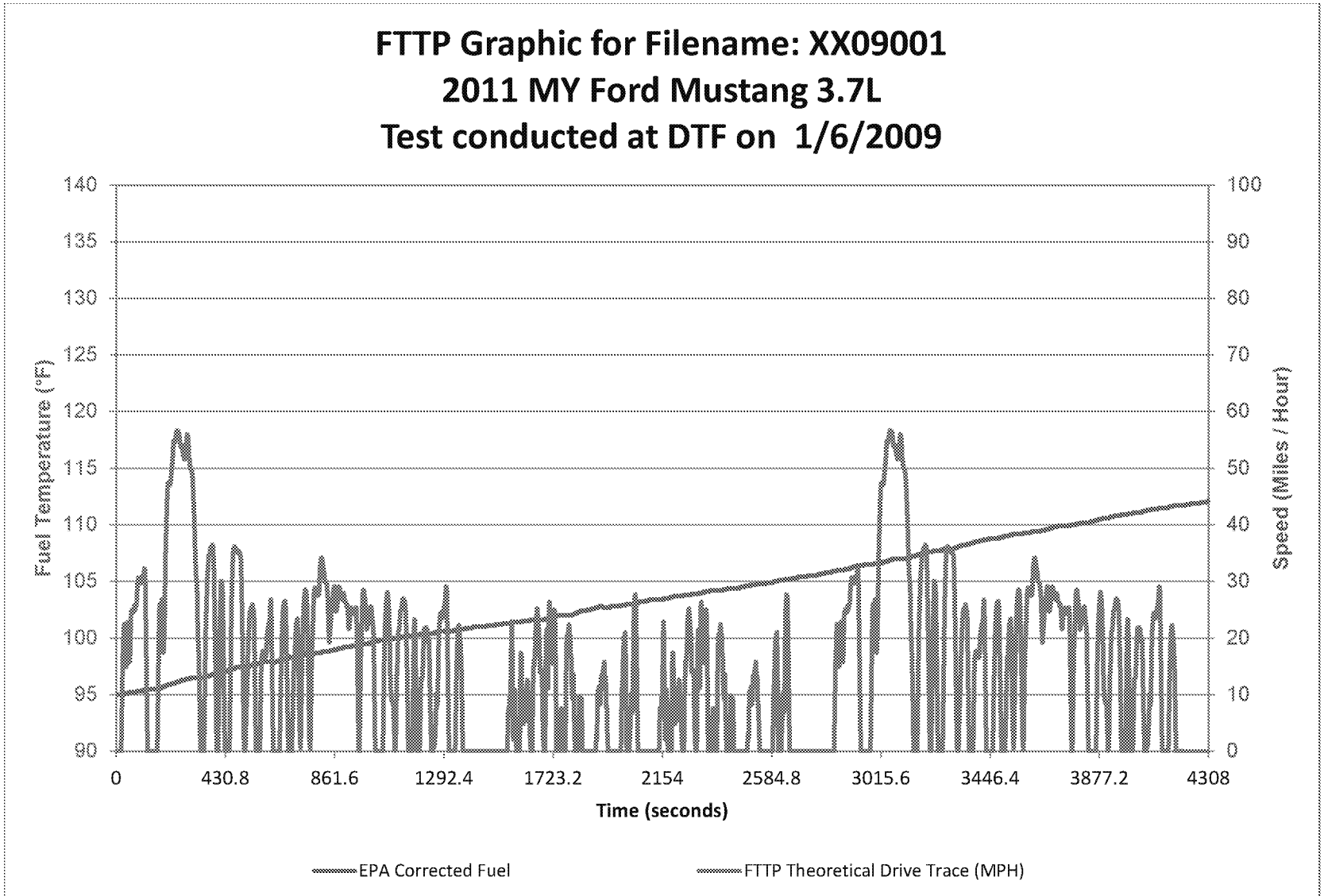
FTTP Graphic for Filename: XX09001
2011 MY Ford Mustang 3.7L
Test conducted at DTF on 1/6/2009
Fuel Temperature (°F)
Speed (Miles / Hour)
Time (seconds)
140
135
130
125
120
115
110
105
100
95
90
100
90
80
70
60
50
40
30
20
10
0
0
430.8
861.6
1292.4
1723.2
2154
2584.8
3015.6
3446.4
3877.2
4308
EPA Corrected Fuel
FTTP Theoretical Drive Trace (MPH)

Time Sec	Trace Speed MPH	EPA Fuel Temp °F
1	0.0	95.0
61	24.8	95.2
121	10.3	95.4
181	26.8	95.6
241	56.6	96.1
301	48.3	96.5
361	31.9	96.6
421	23.2	97.0
481	35.1	97.4
541	25.0	97.6
601	22.2	97.9
661	26.1	98.1
721	10.4	98.4
781	28.2	98.6
841	19.7	98.8
901	26.5	99.2
961	7.1	99.4
1021	2.5	99.7
1081	13.5	99.9
1141	25.0	100.1
1201	11.0	100.3
1261	7.2	100.5
1321	0.0	100.6
1381	0.0	100.9
1441	0.0	101.0
1501	0.0	101.2
1561	21.7	101.4
1621	12.1	101.5
1681	8.0	101.6
1741	0.0	102.0
1801	12.8	102.1
1861	0.0	102.5
1921	14.3	102.7
1981	0.0	102.8
2041	22.8	103.1
2101	0.0	103.3
2161	14.5	103.5
2221	12.3	103.7
2281	3.7	103.9
2341	0.0	104.2
2401	12.3	104.3
2461	0.0	104.5
2521	15.1	104.7
2581	0.0	104.9
2641	26.0	105.2
2701	0.0	105.4
2761	0.0	105.5
2821	0.0	105.8
2881	24.6	106.1
2941	0.0	106.4
3001	19.4	106.6
3061	55.9	107.0
3121	39.3	107.1
3181	34.6	107.5
3241	0.0	107.7
3301	34.7	107.9
3361	8.1	108.3
3421	26.3	108.6
3481	24.5	108.8
3541	5.0	109.2
3601	28.3	109.3
3661	25.5	109.5
3721	25.6	109.9
3781	22.5	110.0
3841	0.0	110.2
3901	8.7	110.6
3961	8.9	110.9
4021	14.8	111.1
4081	12.6	111.3
4141	0.0	111.5
4201	0.0	111.7
4261	0.0	111.9
4308	0.0	112.1

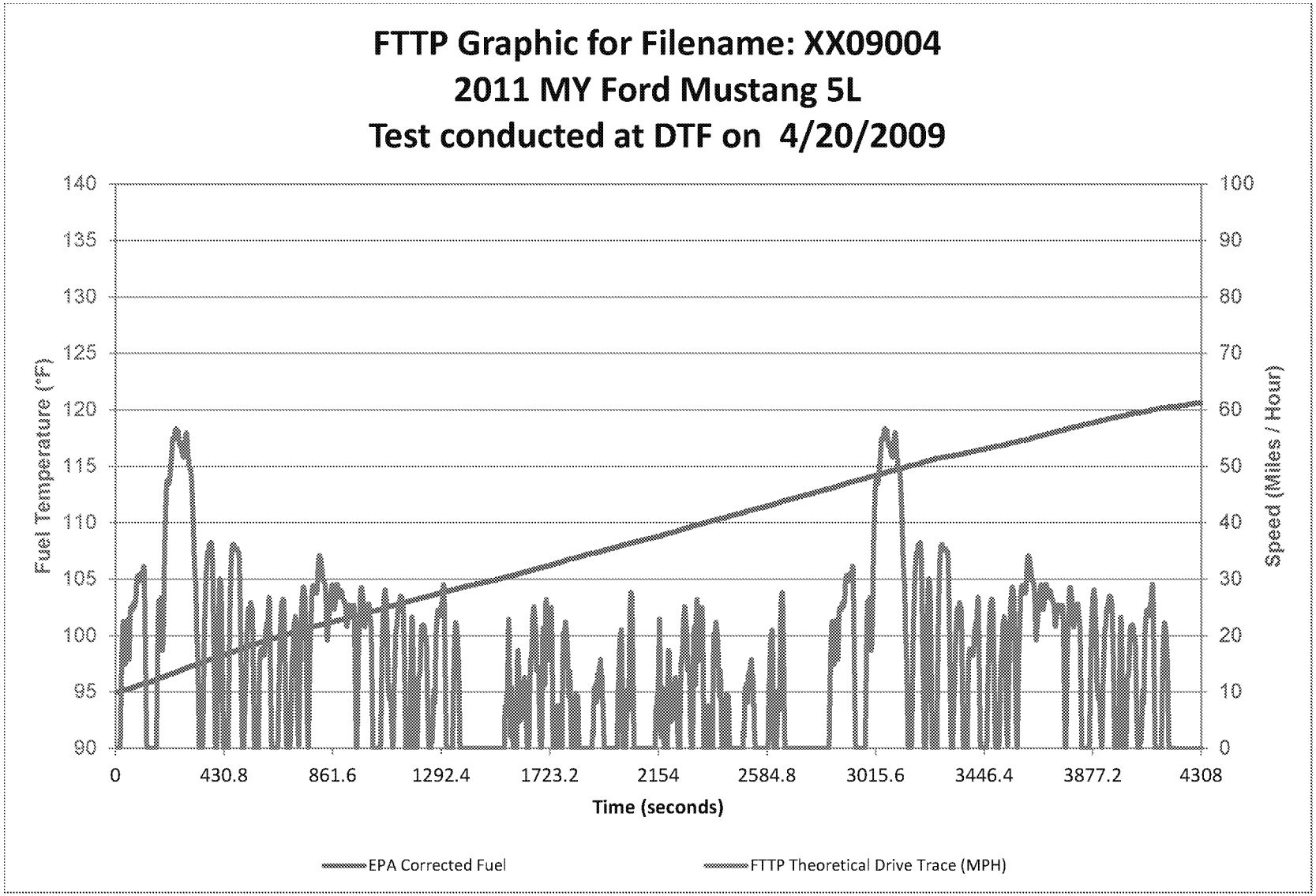
FTTP Graphic for Filename: XX09004
2011 MY Ford Mustang 5L
Test conducted at DTF on 4/20/2009
Fuel Temperature (°F)
Speed (Miles / Hour)
Time (seconds)
140
135
130
125
120
115
110
105
100
95
90
100
90
80
70
60
50
40
30
20
10
0
0
430.8
861.6
1292.4
1723.2
2154
2584.8
3015.6
3446.4
3877.2
4308
EPA Corrected Fuel
FTTP Theoretical Drive Trace (MPH)

Time Sec	Trace Speed MPH	EPA Fuel Temp °F
1	0.0	95.0
61	24.8	95.3
121	10.3	95.8
181	26.8	96.3
241	56.6	96.8
301	48.3	97.3
361	31.9	97.8
421	23.2	98.2
481	35.1	98.7
541	25.0	99.1
601	22.2	99.6
661	26.1	100.0
721	10.4	100.4
781	28.2	100.8
841	19.7	101.1
901	26.5	101.4
961	7.1	101.8
1021	2.5	102.2
1081	13.5	102.5
1141	25.0	102.9
1201	11.0	103.3
1261	7.2	103.6
1321	0.0	104.0
1381	0.0	104.3
1441	0.0	104.6
1501	0.0	104.9
1561	21.7	105.3
1621	12.1	105.6
1681	8.0	106.0
1741	0.0	106.3
1801	12.8	106.8
1861	0.0	107.1
1921	14.3	107.4
1981	0.0	107.8
2041	22.8	108.2
2101	0.0	108.5
2161	14.5	108.8
2221	12.3	109.2
2281	3.7	109.6
2341	0.0	110.0
2401	12.3	110.4
2461	0.0	110.7
2521	15.1	111.1
2581	0.0	111.4
2641	26.0	111.9
2701	0.0	112.2
2761	0.0	112.6
2821	0.0	113.0
2881	24.6	113.3
2941	0.0	113.7
3001	19.4	114.1
3061	55.9	114.5
3121	39.3	114.8
3181	34.6	115.2
3241	0.0	115.6
3301	34.7	115.9
3361	8.1	116.1
3421	26.3	116.4
3481	24.5	116.7
3541	5.0	117.0
3601	28.3	117.3
3661	25.5	117.7
3721	25.6	118.0
3781	22.5	118.3
3841	0.0	118.7
3901	8.7	119.0
3961	8.9	119.3
4021	14.8	119.6
4081	12.6	119.8
4141	0.0	120.1
4201	0.0	120.3
4261	0.0	120.5
4308	0.0	120.6

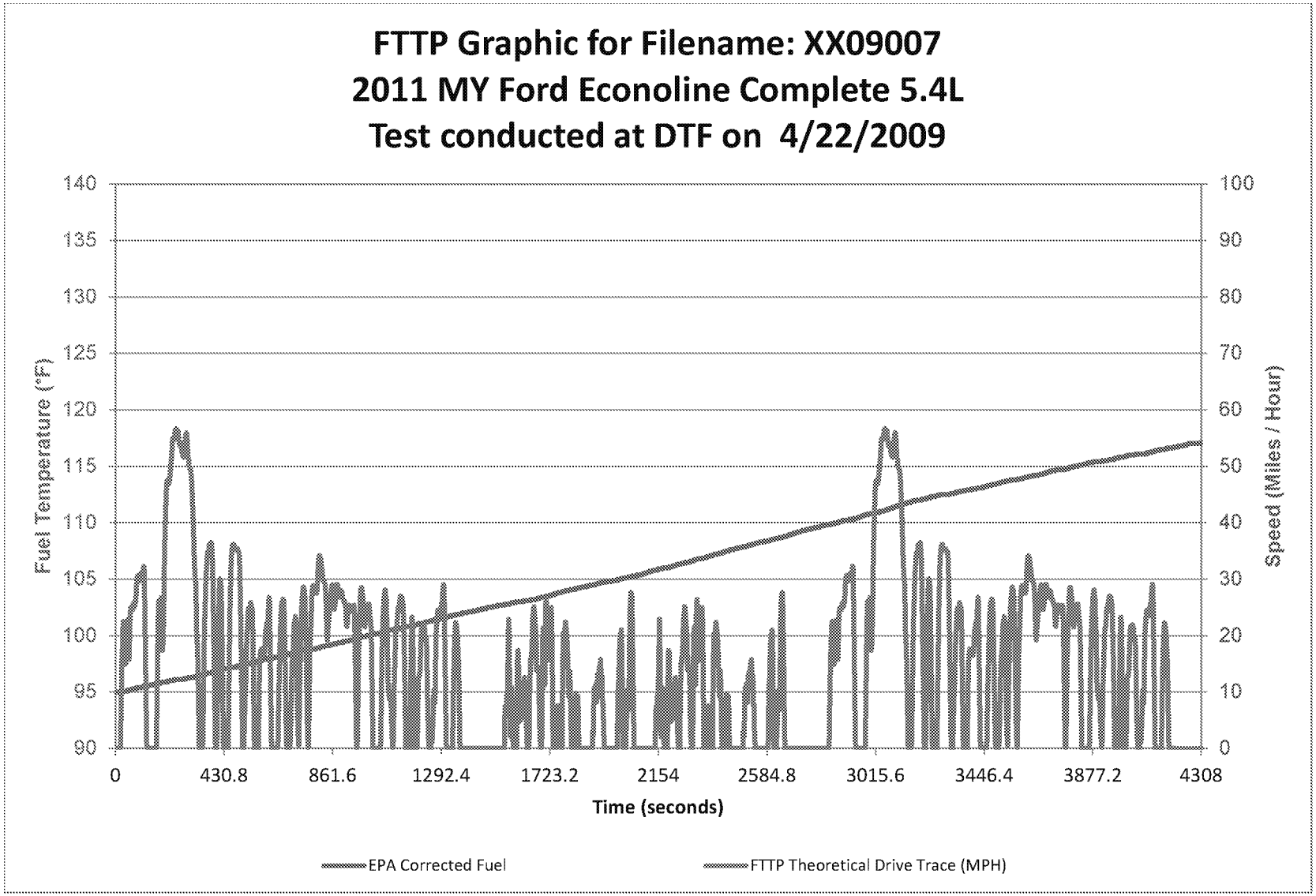
FTTP Graphic for Filename: XX09007
2011 MY Ford Econoline Complete 5.4L
Test conducted at DTF on 4/22/2009
Fuel Temperature (°F)
140
135
130
125
120
115
110
105
100
95
90
Speed (Miles / Hour)
100
90
80
70
60
50
40
30
20
10
0
0
430.8
861.6
1292.4
1723.2
2154
2584.8
3015.6
3446.4
3877.2
4308
Time (seconds)
EPA Corrected Fuel
FTTP Theoretical Drive Trace (MPH)

Time Sec	Trace Speed MPH	EPA Fuel Temp °F
1	0.0	95.0
61	24.8	95.2
121	10.3	95.5
181	26.8	95.8
241	56.6	96.1
301	48.3	96.3
361	31.9	96.6
421	23.2	97.0
481	35.1	97.3
541	25.0	97.6
601	22.2	97.9
661	26.1	98.2
721	10.4	98.5
781	28.2	98.8
841	19.7	99.1
901	26.5	99.4
961	7.1	99.8
1021	2.5	100.1
1081	13.5	100.5
1141	25.0	100.7
1201	11.0	101.0
1261	7.2	101.4
1321	0.0	101.7
1381	0.0	102.0
1441	0.0	102.3
1501	0.0	102.6
1561	21.7	102.8
1621	12.1	103.1
1681	8.0	103.3
1741	0.0	103.7
1801	12.8	104.0
1861	0.0	104.3
1921	14.3	104.6
1981	0.0	104.9
2041	22.8	105.2
2101	0.0	105.5
2161	14.5	105.9
2221	12.3	106.2
2281	3.7	106.6
2341	0.0	106.9
2401	12.3	107.3
2461	0.0	107.7
2521	15.1	108.0
2581	0.0	108.4
2641	26.0	108.7
2701	0.0	109.1
2761	0.0	109.5
2821	0.0	109.8
2881	24.6	110.1
2941	0.0	110.4
3001	19.4	110.8
3061	55.9	111.1
3121	39.3	111.6
3181	34.6	112.0
3241	0.0	112.3
3301	34.7	112.5
3361	8.1	112.8
3421	26.3	113.1
3481	24.5	113.4
3541	5.0	113.7
3601	28.3	113.9
3661	25.5	114.2
3721	25.6	114.6
3781	22.5	114.8
3841	0.0	115.2
3901	8.7	115.4
3961	8.9	115.6
4021	14.8	116.0
4081	12.6	116.1
4141	0.0	116.5
4201	0.0	116.7
4261	0.0	117.0
4308	0.0	117.1

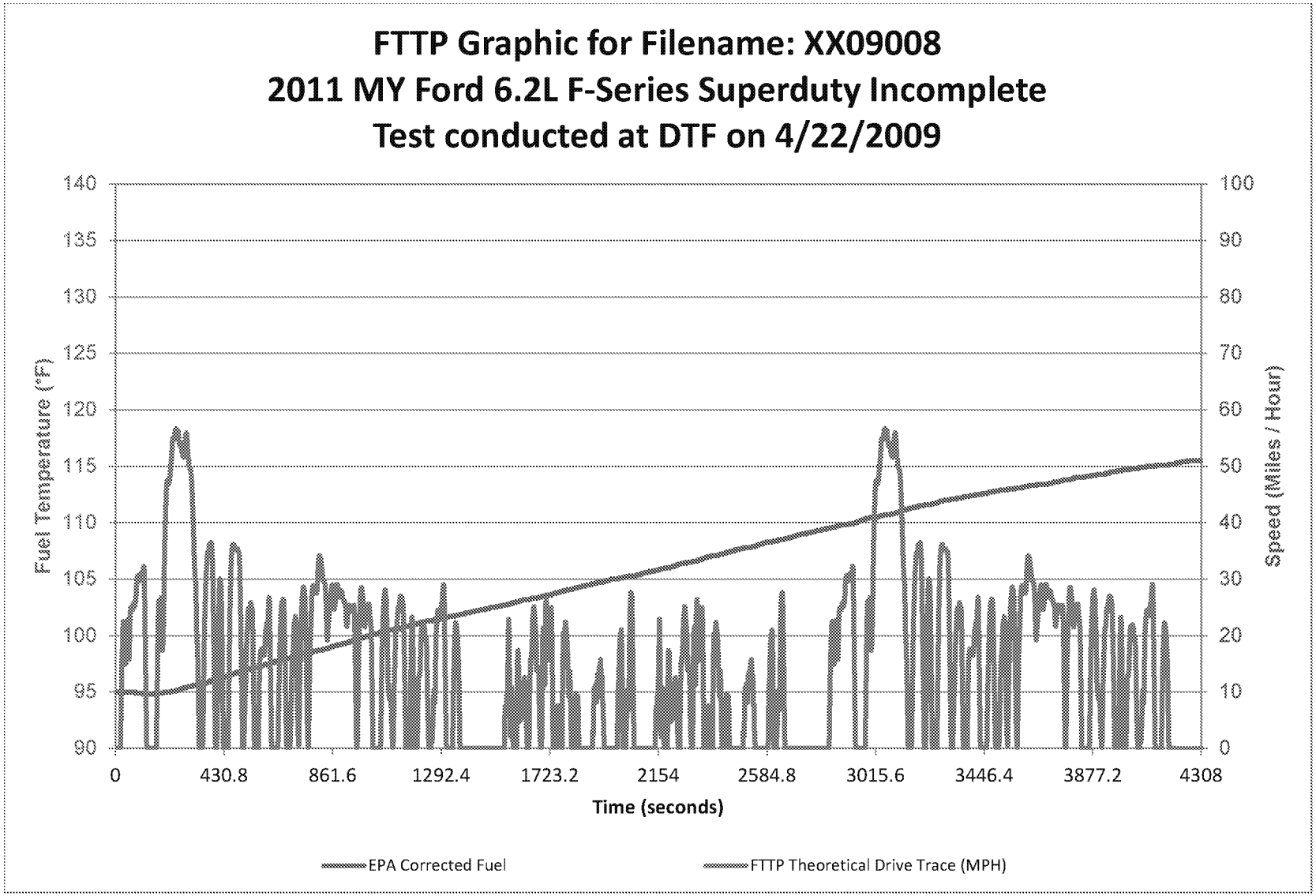
FTTP Graphic for Filename: XX09008
2011 MY Ford 6.2L F-Series Superduty Incomplete
Test conducted at DTF on 4/22/2009
Fuel Temperature (°F)
Speed (Miles / Hour)
Time (seconds)
140
135
130
125
120
115
110
105
100
95
90
100
90
80
70
60
50
40
30
20
10
0
0
430.8
861.6
1292.4
1723.2
2154
2584.8
3015.6
3446.4
3877.2
4308
EPA Corrected Fuel
FTTP Theoretical Drive Trace (MPH)

Time Sec	Trace Speed MPH	EPA Fuel Temp °F
1	0.0	95.0
61	24.8	95.0
121	10.3	94.8
181	26.8	94.9
241	56.6	95.1
301	48.3	95.5
361	31.9	95.8
421	23.2	96.3
481	35.1	96.7
541	25.0	97.1
601	22.2	97.5
661	26.1	97.9
721	10.4	98.2
781	28.2	98.5
841	19.7	98.9
901	26.5	99.3
961	7.1	99.7
1021	2.5	100.1
1081	13.5	100.4
1141	25.0	100.7
1201	11.0	101.1
1261	7.2	101.4
1321	0.0	101.7
1381	0.0	101.9
1441	0.0	102.2
1501	0.0	102.5
1561	21.7	102.8
1621	12.1	103.2
1681	8.0	103.4
1741	0.0	103.7
1801	12.8	104.1
1861	0.0	104.4
1921	14.3	104.7
1981	0.0	105.0
2041	22.8	105.3
2101	0.0	105.6
2161	14.5	105.9
2221	12.3	106.2
2281	3.7	106.5
2341	0.0	106.9
2401	12.3	107.2
2461	0.0	107.6
2521	15.1	107.8
2581	0.0	108.3
2641	26.0	108.5
2701	0.0	108.9
2761	0.0	109.2
2821	0.0	109.5
2881	24.6	109.8
2941	0.0	110.0
3001	19.4	110.5
3061	55.9	110.7
3121	39.3	111.0
3181	34.6	111.4
3241	0.0	111.7
3301	34.7	112.0
3361	8.1	112.3
3421	26.3	112.5
3481	24.5	112.7
3541	5.0	113.0
3601	28.3	113.2
3661	25.5	113.4
3721	25.6	113.6
3781	22.5	113.8
3841	0.0	114.0
3901	8.7	114.3
3961	8.9	114.5
4021	14.8	114.7
4081	12.6	114.9
4141	0.0	115.1
4201	0.0	115.2
4261	0.0	115.5
4308	0.0	115.5

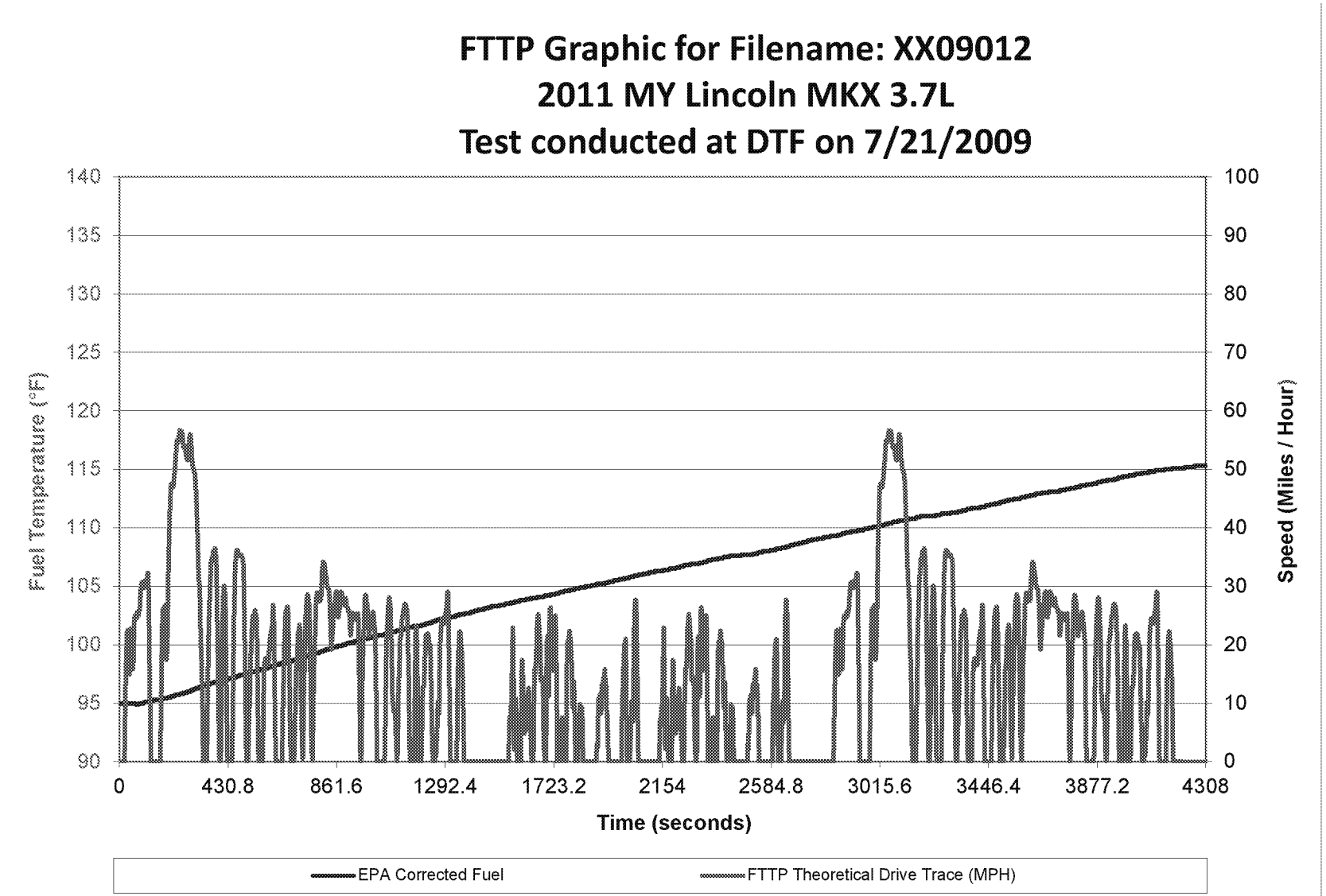
FTTP Graphic for Filename: XX09012
2011 MY Lincoln MKX 3.7L
Test conducted at DTF on 7/21/2009
Fuel Temperature (°F)
140
135
130
125
120
115
110
105
100
95
90
Speed (Miles / Hour)
100
90
80
70
60
50
40
30
20
10
0
0
430.8
861.6
1292.4
1723.2
2154
2584.8
3015.6
3446.4
3877.2
4308
Time (seconds)
EPA Corrected Fuel
FTTP Theoretical Drive Trace (MPH)

FTTP for Filename: XX09012

Time Sec	Trace Speed MPH	EPA Fuel Temp °F
1	0.0	95.0
61	24.8	95.0
121	10.3	95.2
181	26.8	95.4
241	56.6	95.8
301	48.3	96.2
361	31.9	96.7
421	23.2	97.0
481	35.1	97.4
541	25.0	97.8
601	22.2	98.1
661	26.1	98.5
721	10.4	98.9
781	28.2	99.3
841	19.7	99.7
901	26.5	100.1
961	7.1	100.4
1021	2.5	100.8
1081	13.5	101.1
1141	25.0	101.4
1201	11.0	101.7
1261	7.2	102.1
1321	0.0	102.4
1381	0.0	102.7
1441	0.0	103.0
1501	0.0	103.3
1561	21.7	103.6
1621	12.1	103.9
1681	8.0	104.1
1741	0.0	104.4
1801	12.8	104.7
1861	0.0	105.0
1921	14.3	105.2
1981	0.0	105.6
2041	22.8	105.9
2101	0.0	106.2
2161	14.5	106.4
2221	12.3	106.6
2281	3.7	106.9
2341	0.0	107.2
2401	12.3	107.5
2461	0.0	107.6
2521	15.1	107.8
2581	0.0	108.1
2641	26.0	108.3
2701	0.0	108.7
2761	0.0	109.0
2821	0.0	109.3
2881	24.6	109.6
2941	0.0	109.8
3001	19.4	110.1
3061	55.9	110.4
3121	39.3	110.7
3181	34.6	111.0
3241	0.0	111.1
3301	34.7	111.3
3361	8.1	111.6
3421	26.3	111.8
3481	24.5	112.1
3541	5.0	112.4
3601	28.3	112.7
3661	25.5	113.0
3721	25.6	113.1
3781	22.5	113.4
3841	0.0	113.7
3901	8.7	114.0
3961	8.9	114.3
4021	14.8	114.5
4081	12.6	114.7
4141	0.0	114.9
4201	0.0	115.1
4261	0.0	115.2
4308	0.0	115.3

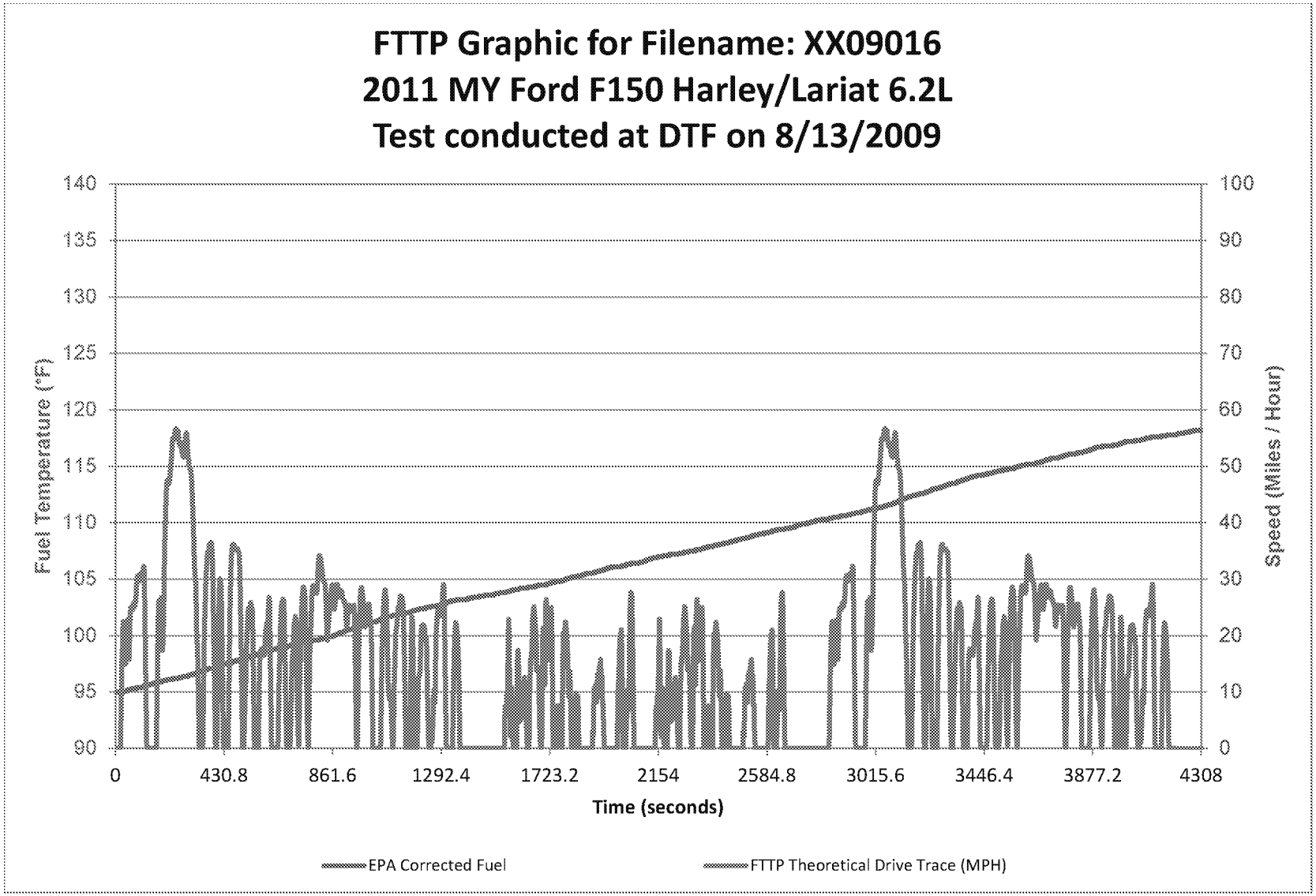
FTTP Graphic for Filename: XX09016
2011 MY Ford F150 Harley/Lariat 6.2L
Test conducted at DTF on 8/13/2009
Fuel Temperature (°F)
Speed (Miles / Hour)
Time (seconds)
140
135
130
125
120
115
110
105
100
95
90
100
90
80
70
60
50
40
30
20
10
0
0
430.8
861.6
1292.4
1723.2
2154
2584.8
3015.6
3446.4
3877.2
4308
EPA Corrected Fuel
FTTP Theoretical Drive Trace (MPH)

Time Sec	Trace Speed MPH	EPA Fuel Temp °F
1	0.0	95.0
61	24.8	95.2
121	10.3	95.6
181	26.8	95.9
241	56.6	96.2
301	48.3	96.5
361	31.9	97.0
421	23.2	97.4
481	35.1	97.8
541	25.0	98.2
601	22.2	98.6
661	26.1	98.9
721	10.4	99.3
781	28.2	99.5
841	19.7	99.9
901	26.5	100.3
961	7.1	100.7
1021	2.5	101.2
1081	13.5	101.7
1141	25.0	101.9
1201	11.0	102.3
1261	7.2	102.6
1321	0.0	103.0
1381	0.0	103.2
1441	0.0	103.4
1501	0.0	103.6
1561	21.7	103.9
1621	12.1	104.2
1681	8.0	104.5
1741	0.0	104.7
1801	12.8	105.1
1861	0.0	105.4
1921	14.3	105.7
1981	0.0	106.1
2041	22.8	106.3
2101	0.0	106.6
2161	14.5	107.0
2221	12.3	107.2
2281	3.7	107.5
2341	0.0	107.8
2401	12.3	108.1
2461	0.0	108.4
2521	15.1	108.8
2581	0.0	109.1
2641	26.0	109.4
2701	0.0	109.7
2761	0.0	110.1
2821	0.0	110.3
2881	24.6	110.6
2941	0.0	110.9
3001	19.4	111.2
3061	55.9	111.5
3121	39.3	112.1
3181	34.6	112.5
3241	0.0	113.0
3301	34.7	113.4
3361	8.1	113.8
3421	26.3	114.2
3481	24.5	114.4
3541	5.0	114.8
3601	28.3	115.1
3661	25.5	115.3
3721	25.6	115.7
3781	22.5	116.1
3841	0.0	116.3
3901	8.7	116.7
3961	8.9	116.9
4021	14.8	117.2
4081	12.6	117.4
4141	0.0	117.6
4201	0.0	117.8
4261	0.0	118.1
4308	0.0	118.2

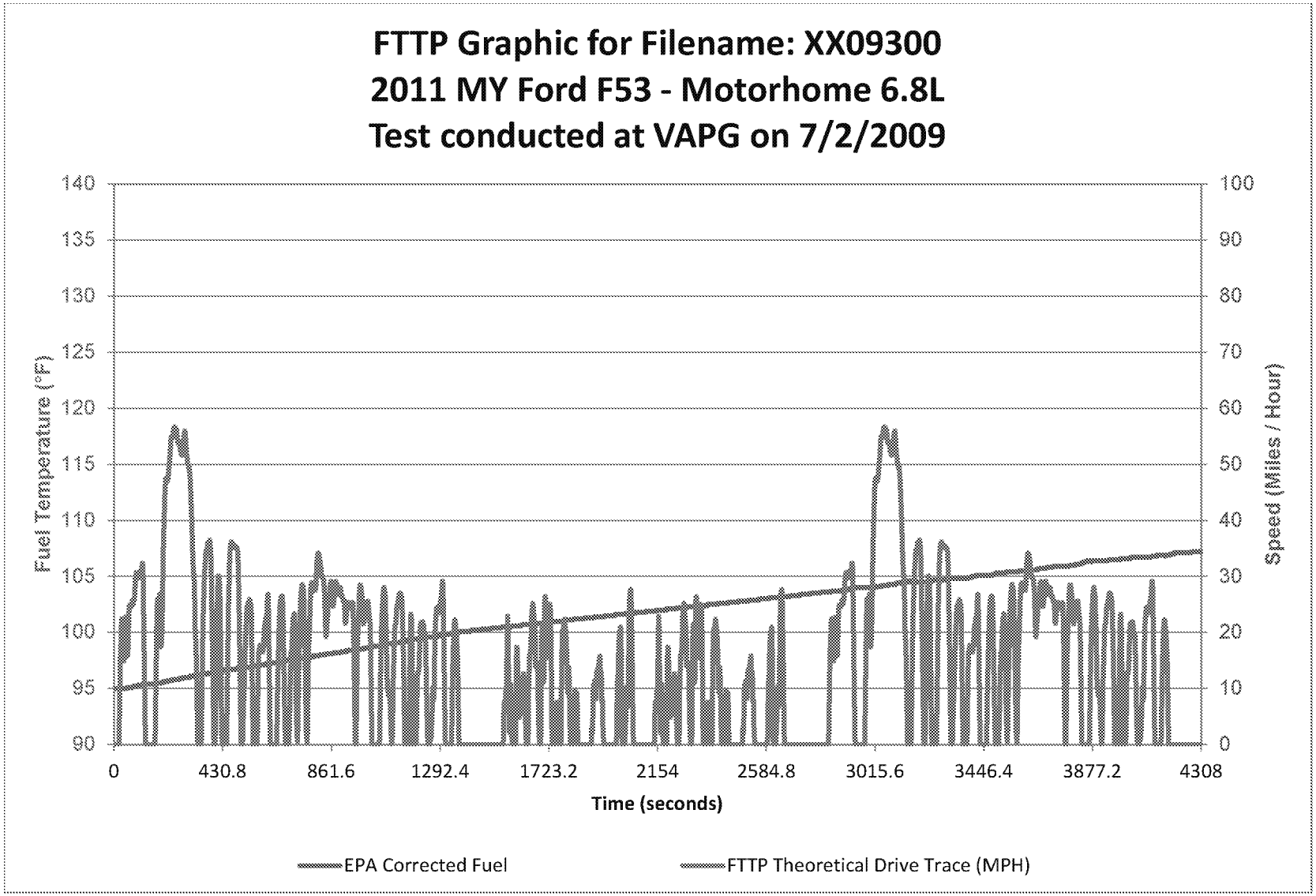
FTTP Graphic for Filename: XX09300
2011 MY Ford F53 - Motorhome 6.8L
Test conducted at VAPG on 7/2/2009
Fuel Temperature (°F)
140
135
130
125
120
115
110
105
100
95
90
Speed (Miles / Hour)
100
90
80
70
60
50
40
30
20
10
0
0
430.8
861.6
1292.4
1723.2
2154
2584.8
3015.6
3446.4
3877.2
4308
Time (seconds)
EPA Corrected Fuel
FTTP Theoretical Drive Trace (MPH)

Time Sec	Trace Speed MPH	EPA Fuel Temp °F
1	0.0	95.0
61	24.8	95.1
121	10.3	95.4
181	26.8	95.5
241	56.6	95.8
301	48.3	96.1
361	31.9	96.3
421	23.2	96.6
481	35.1	96.7
541	25.0	96.9
601	22.2	97.1
661	26.1	97.3
721	10.4	97.6
781	28.2	97.8
841	19.7	98.1
901	26.5	98.3
961	7.1	98.5
1021	2.5	98.7
1081	13.5	98.9
1141	25.0	99.2
1201	11.0	99.4
1261	7.2	99.6
1321	0.0	99.8
1381	0.0	100.1
1441	0.0	100.2
1501	0.0	100.4
1561	21.7	100.5
1621	12.1	100.7
1681	8.0	100.8
1741	0.0	101.0
1801	12.8	101.1
1861	0.0	101.2
1921	14.3	101.4
1981	0.0	101.5
2041	22.8	101.7
2101	0.0	101.8
2161	14.5	102.0
2221	12.3	102.1
2281	3.7	102.3
2341	0.0	102.4
2401	12.3	102.6
2461	0.0	102.7
2521	15.1	102.9
2581	0.0	103.0
2641	26.0	103.2
2701	0.0	103.3
2761	0.0	103.5
2821	0.0	103.6
2881	24.6	103.7
2941	0.0	104.0
3001	19.4	104.0
3061	55.9	104.2
3121	39.3	104.5
3181	34.6	104.5
3241	0.0	104.6
3301	34.7	104.8
3361	8.1	104.8
3421	26.3	105.1
3481	24.5	105.1
3541	5.0	105.4
3601	28.3	105.5
3661	25.5	105.7
3721	25.6	105.9
3781	22.5	105.9
3841	0.0	106.2
3901	8.7	106.4
3961	8.9	106.5
4021	14.8	106.6
4081	12.6	106.7
4141	0.0	106.9
4201	0.0	107.1
4261	0.0	107.1
4308	0.0	107.2

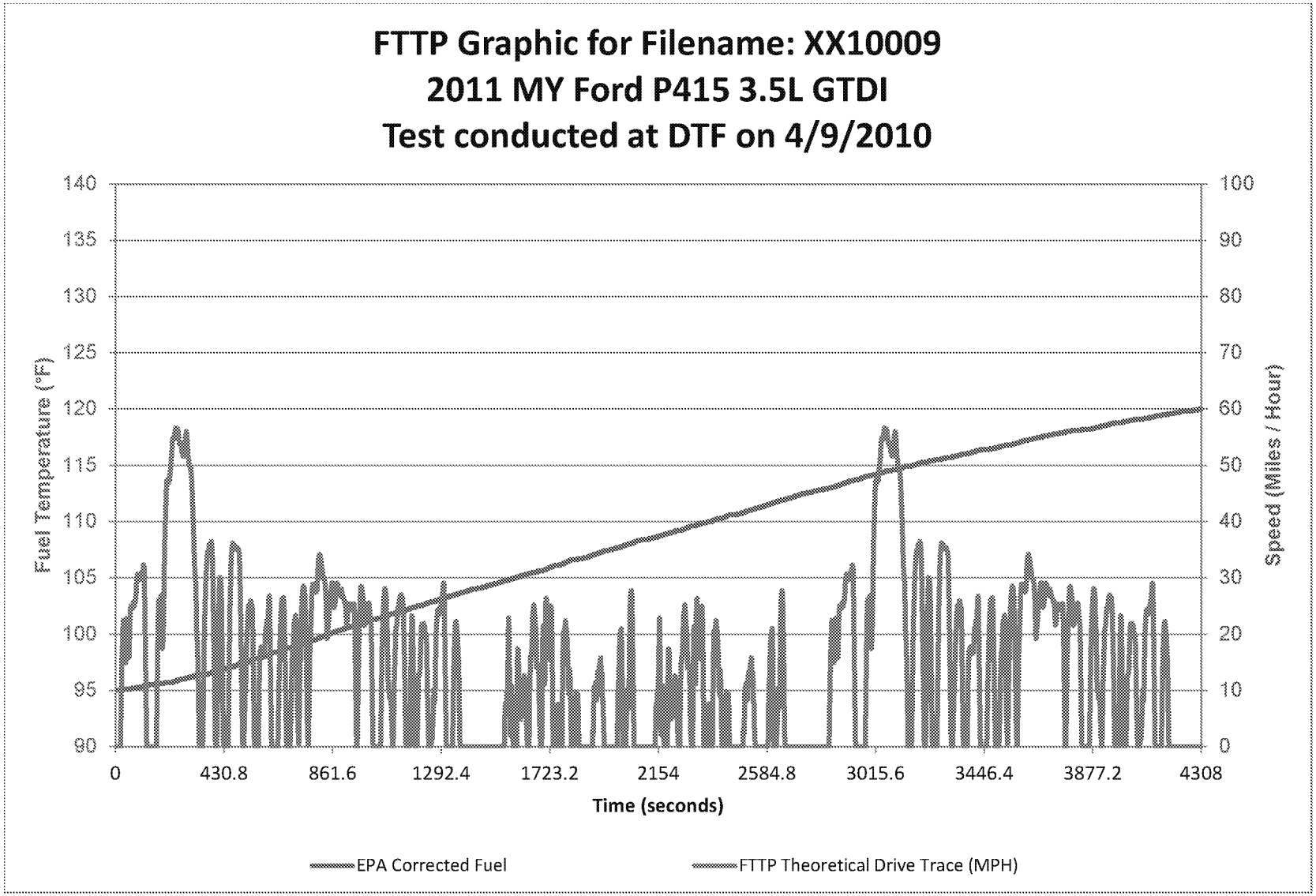
FTTP Graphic for Filename: XX10009
2011 MY Ford P415 3.5L GTDI
Test conducted at DTF on 4/9/2010
Fuel Temperature (°F)
Speed (Miles / Hour)
Time (seconds)
140
135
130
125
120
115
110
105
100
95
90
100
90
80
70
60
50
40
30
20
10
0
0
430.8
861.6
1292.4
1723.2
2154
2584.8
3015.6
3446.4
3877.2
4308
EPA Corrected Fuel
FTTP Theoretical Drive Trace (MPH)

FTTP for Filename: XX10009

Time Sec	Trace Speed MPH	EPA Fuel Temp °F
1	0.0	95.0
61	24.8	95.1
121	10.3	95.4
181	26.8	95.6
241	56.6	95.8
301	48.3	96.2
361	31.9	96.4
421	23.2	96.8
481	35.1	97.2
541	25.0	97.7
601	22.2	98.1
661	26.1	98.5
721	10.4	99.0
781	28.2	99.4
841	19.7	99.9
901	26.5	100.4
961	7.1	100.8
1021	2.5	101.3
1081	13.5	101.7
1141	25.0	102.0
1201	11.0	102.5
1261	7.2	102.9
1321	0.0	103.3
1381	0.0	103.7
1441	0.0	104.1
1501	0.0	104.4
1561	21.7	104.8
1621	12.1	105.2
1681	8.0	105.6
1741	0.0	106.1
1801	12.8	106.5
1861	0.0	106.8
1921	14.3	107.2
1981	0.0	107.6
2041	22.8	108.0
2101	0.0	108.4
2161	14.5	108.7
2221	12.3	109.2
2281	3.7	109.6
2341	0.0	109.9
2401	12.3	110.3
2461	0.0	110.6
2521	15.1	111.0
2581	0.0	111.4
2641	26.0	111.9
2701	0.0	112.3
2761	0.0	112.6
2821	0.0	112.9
2881	24.6	113.3
2941	0.0	113.7
3001	19.4	114.1
3061	55.9	114.5
3121	39.3	114.8
3181	34.6	115.1
3241	0.0	115.4
3301	34.7	115.7
3361	8.1	116.0
3421	26.3	116.3
3481	24.5	116.5
3541	5.0	116.8
3601	28.3	117.2
3661	25.5	117.5
3721	25.6	117.8
3781	22.5	118.0
3841	0.0	118.2
3901	8.7	118.4
3961	8.9	118.8
4021	14.8	118.9
4081	12.6	119.2
4141	0.0	119.4
4201	0.0	119.7
4261	0.0	119.8
4308	0.0	120.0

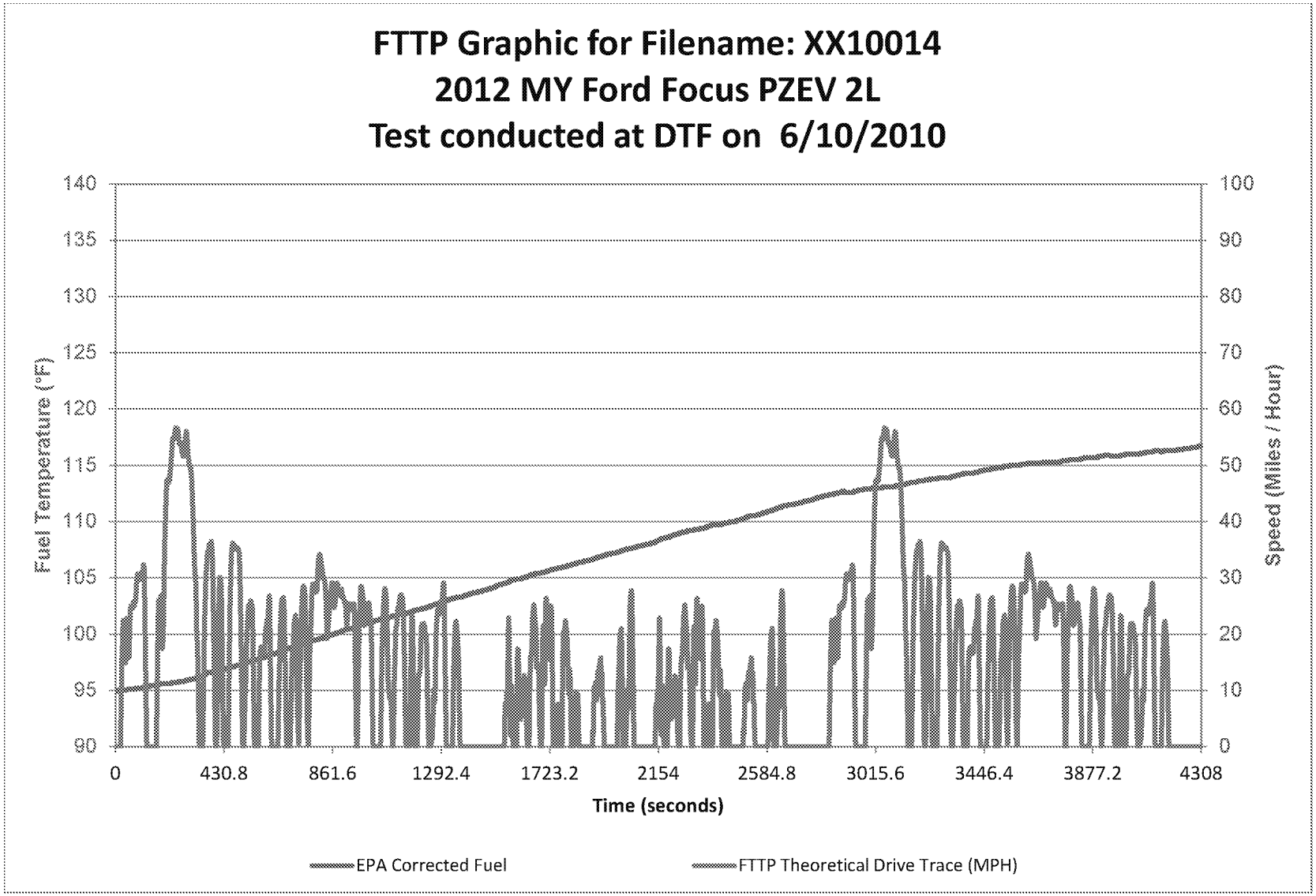
FTTP Graphic for Filename: XX10014
2012 MY Ford Focus PZEV 2L
Test conducted at DTF on 6/10/2010
Fuel Temperature (°F)
Speed (Miles / Hour)
Time (seconds)
140
135
130
125
120
115
110
105
100
95
90
100
90
80
70
60
50
40
30
20
10
0
0
430.8
861.6
1292.4
1723.2
2154
2584.8
3015.6
3446.4
3877.2
4308
EPA Corrected Fuel
FTTP Theoretical Drive Trace (MPH)

Time Sec	Trace Speed MPH	EPA Fuel Temp °F
1	0.0	95.0
61	24.8	95.1
121	10.3	95.3
181	26.8	95.6
241	56.6	95.7
301	48.3	96.0
361	31.9	96.5
421	23.2	96.8
481	35.1	97.2
541	25.0	97.6
601	22.2	98.0
661	26.1	98.5
721	10.4	98.9
781	28.2	99.4
841	19.7	99.8
901	26.5	100.3
961	7.1	100.7
1021	2.5	101.1
1081	13.5	101.4
1141	25.0	101.8
1201	11.0	102.2
1261	7.2	102.6
1321	0.0	103.0
1381	0.0	103.4
1441	0.0	103.8
1501	0.0	104.2
1561	21.7	104.6
1621	12.1	105.0
1681	8.0	105.4
1741	0.0	105.8
1801	12.8	106.1
1861	0.0	106.5
1921	14.3	106.9
1981	0.0	107.2
2041	22.8	107.6
2101	0.0	107.9
2161	14.5	108.4
2221	12.3	108.8
2281	3.7	109.2
2341	0.0	109.5
2401	12.3	109.7
2461	0.0	110.0
2521	15.1	110.5
2581	0.0	110.8
2641	26.0	111.3
2701	0.0	111.6
2761	0.0	111.9
2821	0.0	112.3
2881	24.6	112.6
2941	0.0	112.7
3001	19.4	112.9
3061	55.9	113.1
3121	39.3	113.3
3181	34.6	113.6
3241	0.0	113.8
3301	34.7	113.9
3361	8.1	114.2
3421	26.3	114.4
3481	24.5	114.7
3541	5.0	114.9
3601	28.3	115.1
3661	25.5	115.2
3721	25.6	115.3
3781	22.5	115.5
3841	0.0	115.6
3901	8.7	115.8
3961	8.9	115.8
4021	14.8	116.0
4081	12.6	116.1
4141	0.0	116.3
4201	0.0	116.3
4261	0.0	116.5
4308	0.0	116.7

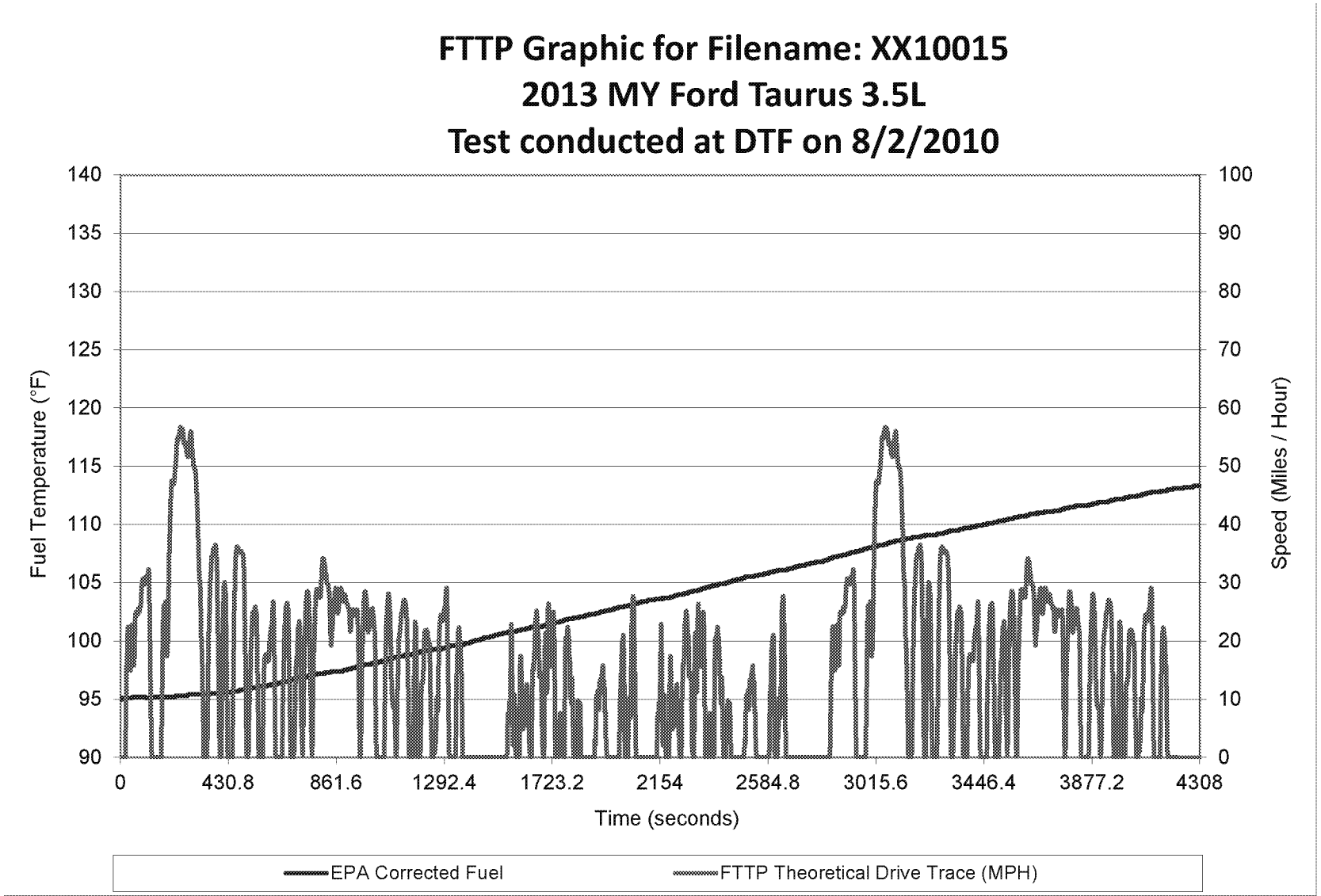
FTTP Graphic for Filename: XX10015
2013 MY Ford Taurus 3.5L
Test conducted at DTF on 8/2/2010
Fuel Temperature (°F)
Speed (Miles / Hour)
Time (seconds)
140
135
130
125
120
115
110
105
100
95
90
100
90
80
70
60
50
40
30
20
10
0
0
430.8
861.6
1292.4
1723.2
2154
2584.8
3015.6
3446.4
3877.2
4308
EPA Corrected Fuel
FTTP Theoretical Drive Trace (MPH)

FTTP for Filename: XX10015

Time Sec	Trace Speed MPH	EPA Fuel Temp °F
1	0.0	95.0
61	24.8	95.2
121	10.3	95.1
181	26.8	95.2
241	56.6	95.3
301	48.3	95.4
361	31.9	95.5
421	23.2	95.6
481	35.1	95.8
541	25.0	96.0
601	22.2	96.3
661	26.1	96.5
721	10.4	96.9
781	28.2	97.1
841	19.7	97.4
901	26.5	97.5
961	7.1	97.9
1021	2.5	98.1
1081	13.5	98.5
1141	25.0	98.8
1201	11.0	99.1
1261	7.2	99.3
1321	0.0	99.6
1381	0.0	99.8
1441	0.0	100.2
1501	0.0	100.5
1561	21.7	100.8
1621	12.1	101.1
1681	8.0	101.2
1741	0.0	101.6
1801	12.8	101.9
1861	0.0	102.2
1921	14.3	102.5
1981	0.0	102.8
2041	22.8	103.1
2101	0.0	103.4
2161	14.5	103.7
2221	12.3	103.9
2281	3.7	104.2
2341	0.0	104.6
2401	12.3	104.9
2461	0.0	105.3
2521	15.1	105.5
2581	0.0	105.8
2641	26.0	106.1
2701	0.0	106.4
2761	0.0	106.7
2821	0.0	107.0
2881	24.6	107.4
2941	0.0	107.7
3001	19.4	108.1
3061	55.9	108.4
3121	39.3	108.7
3181	34.6	108.9
3241	0.0	109.1
3301	34.7	109.4
3361	8.1	109.6
3421	26.3	109.9
3481	24.5	110.1
3541	5.0	110.4
3601	28.3	110.7
3661	25.5	110.9
3721	25.6	111.1
3781	22.5	111.4
3841	0.0	111.6
3901	8.7	111.9
3961	8.9	112.1
4021	14.8	112.3
4081	12.6	112.6
4141	0.0	112.8
4201	0.0	113.1
4261	0.0	113.2
4308	0.0	113.3

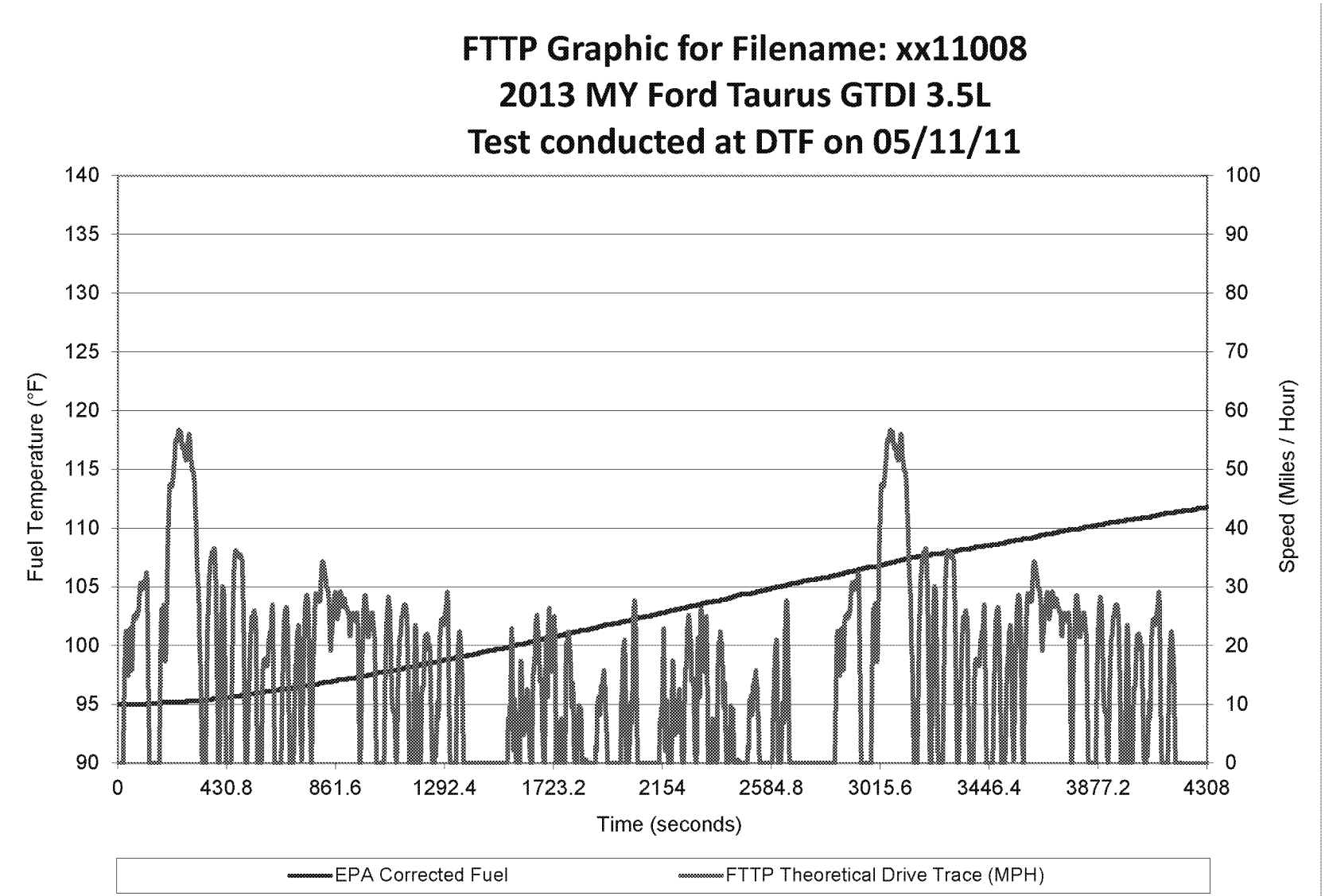
FTTP Graphic for Filename: xx11008
2013 MY Ford Taurus GTDI 3.5L
Test conducted at DTF on 05/11/11
Fuel Temperature (°F)
Speed (Miles / Hour)
Time (seconds)
140
135
130
125
120
115
110
105
100
95
90
100
90
80
70
60
50
40
30
20
10
0
0
430.8
861.6
1292.4
1723.2
2154
2584.8
3015.6
3446.4
3877.2
4308
EPA Corrected Fuel
FTTP Theoretical Drive Trace (MPH)

FTTP for Filename: xx11008

Time Sec	Trace Speed MPH	EPA Fuel Temp °F
1	0.0	95.0
61	24.5	95.0
121	12.8	95.1
181	26.9	95.2
241	56.7	95.2
301	48.6	95.3
361	31.6	95.4
421	25.0	95.6
481	35.0	95.7
541	25.0	95.9
601	22.0	96.1
661	26.0	96.3
721	12.0	96.5
781	28.0	96.7
841	19.2	96.9
901	26.6	97.1
961	5.3	97.4
1021	4.3	97.6
1081	15.0	97.8
1141	25.5	98.1
1201	9.8	98.4
1261	6.3	98.6
1321	0.0	98.9
1381	0.0	99.1
1441	0.0	99.4
1501	0.0	99.7
1561	10.2	100.0
1621	10.6	100.2
1681	2.9	100.6
1741	0.0	100.8
1801	10.4	101.1
1861	0.0	101.4
1921	15.3	101.7
1981	0.0	101.9
2041	26.7	102.3
2101	0.0	102.5
2161	14.5	102.8
2221	12.3	103.1
2281	3.7	103.4
2341	0.0	103.7
2401	12.3	103.9
2461	0.1	104.3
2521	15.1	104.5
2581	0.0	104.8
2641	26.0	105.1
2701	0.0	105.4
2761	0.0	105.6
2821	0.0	105.9
2881	24.7	106.2
2941	0.0	106.5
3001	17.7	106.7
3061	56.5	107.1
3121	43.8	107.4
3181	34.6	107.6
3241	8.5	107.8
3301	35.0	108.0
3361	19.8	108.2
3421	22.7	108.4
3481	26.5	108.6
3541	2.1	108.9
3601	28.8	109.1
3661	22.6	109.4
3721	26.2	109.7
3781	18.6	109.9
3841	0.0	110.1
3901	9.5	110.4
3961	17.5	110.6
4021	12.8	110.8
4081	8.5	110.9
4141	0.0	111.3
4201	0.0	111.4
4261	0.0	111.6
4308	0.0	111.8

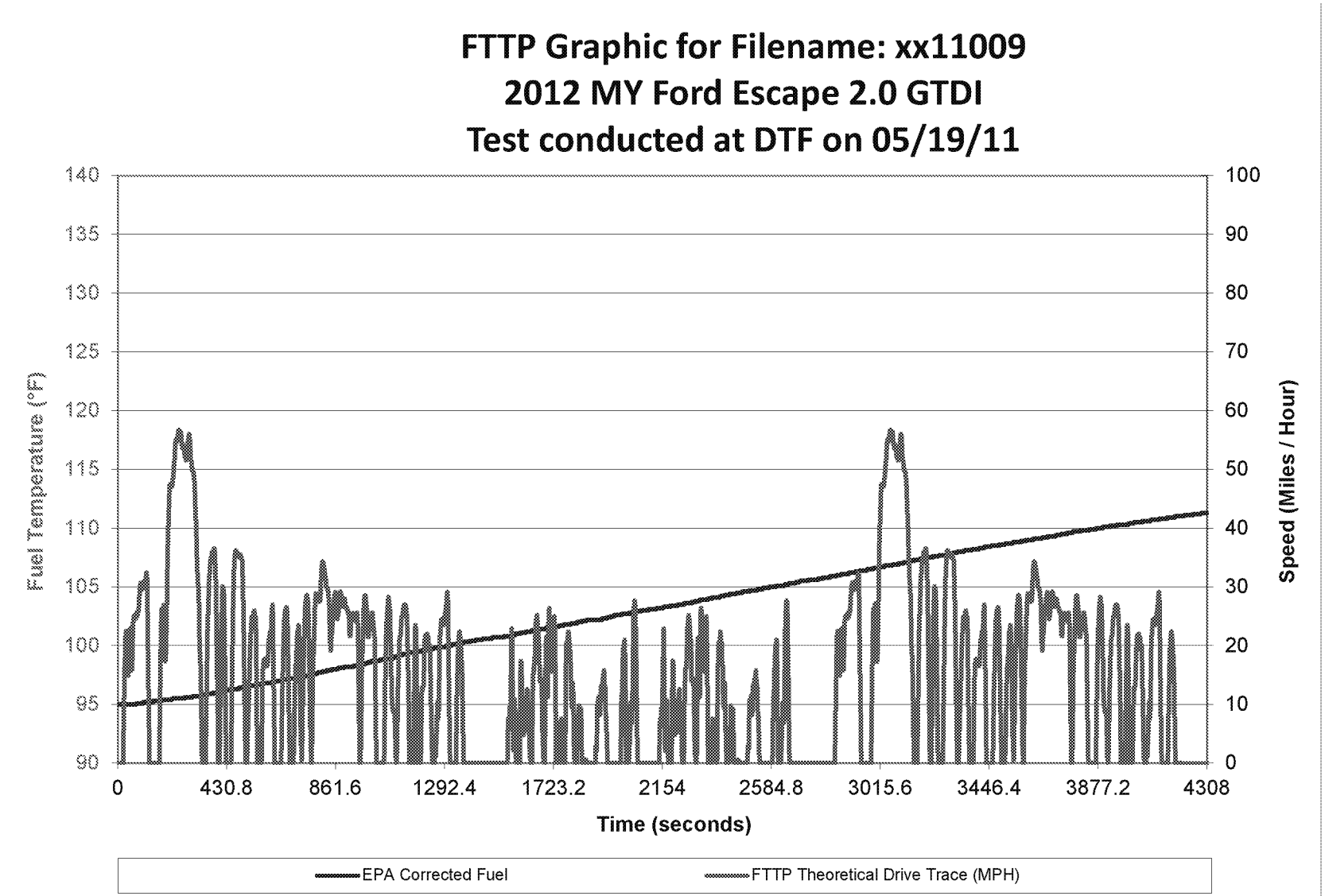
FTTP Graphic for Filename: xx11009
2012 MY Ford Escape 2.0 GTDI
Test conducted at DTF on 05/19/11
Fuel Temperature (°F)
Speed (Miles / Hour)
Time (seconds)
140
135
130
125
120
115
110
105
100
95
90
100
90
80
70
60
50
40
30
20
10
0
0
430.8
861.6
1292.4
1723.2
2154
2584.8
3015.6
3446.4
3877.2
4308
EPA Corrected Fuel
FTTP Theoretical Drive Trace (MPH)

Time Sec	Trace Speed MPH	EPA Fuel Temp °F
1	0.0	95.0
61	24.5	95.0
121	12.8	95.2
181	26.9	95.4
241	56.7	95.5
301	48.6	95.7
361	31.6	95.9
421	25.0	96.2
481	35.0	96.4
541	25.0	96.6
601	22.0	96.8
661	26.0	97.1
721	12.0	97.3
781	28.0	97.6
841	19.2	97.9
901	26.6	98.2
961	5.3	98.4
1021	4.3	98.7
1081	15.0	98.9
1141	25.5	99.3
1201	9.8	99.6
1261	6.3	99.8
1321	0.0	100.1
1381	0.0	100.3
1441	0.0	100.5
1501	0.0	100.7
1561	10.2	100.9
1621	10.6	101.2
1681	2.9	101.4
1741	0.0	101.6
1801	10.4	101.9
1861	0.0	102.2
1921	15.3	102.3
1981	0.0	102.6
2041	26.7	102.8
2101	0.0	103.1
2161	14.5	103.3
2221	12.3	103.5
2281	3.7	103.7
2341	0.0	104.0
2401	12.3	104.3
2461	0.1	104.5
2521	15.1	104.7
2581	0.0	105.0
2641	26.0	105.2
2701	0.0	105.5
2761	0.0	105.6
2821	0.0	105.9
2881	24.7	106.1
2941	0.0	106.4
3001	17.7	106.6
3061	56.5	106.8
3121	43.8	107.1
3181	34.6	107.4
3241	8.5	107.6
3301	35.0	107.9
3361	19.8	108.1
3421	22.7	108.3
3481	26.5	108.5
3541	2.1	108.8
3601	28.8	109.0
3661	22.6	109.2
3721	26.2	109.4
3781	18.6	109.7
3841	0.0	109.9
3901	9.5	110.1
3961	17.5	110.3
4021	12.8	110.5
4081	8.5	110.6
4141	0.0	110.8
4201	0.0	111.0
4261	0.0	111.2
4308	0.0	111.3

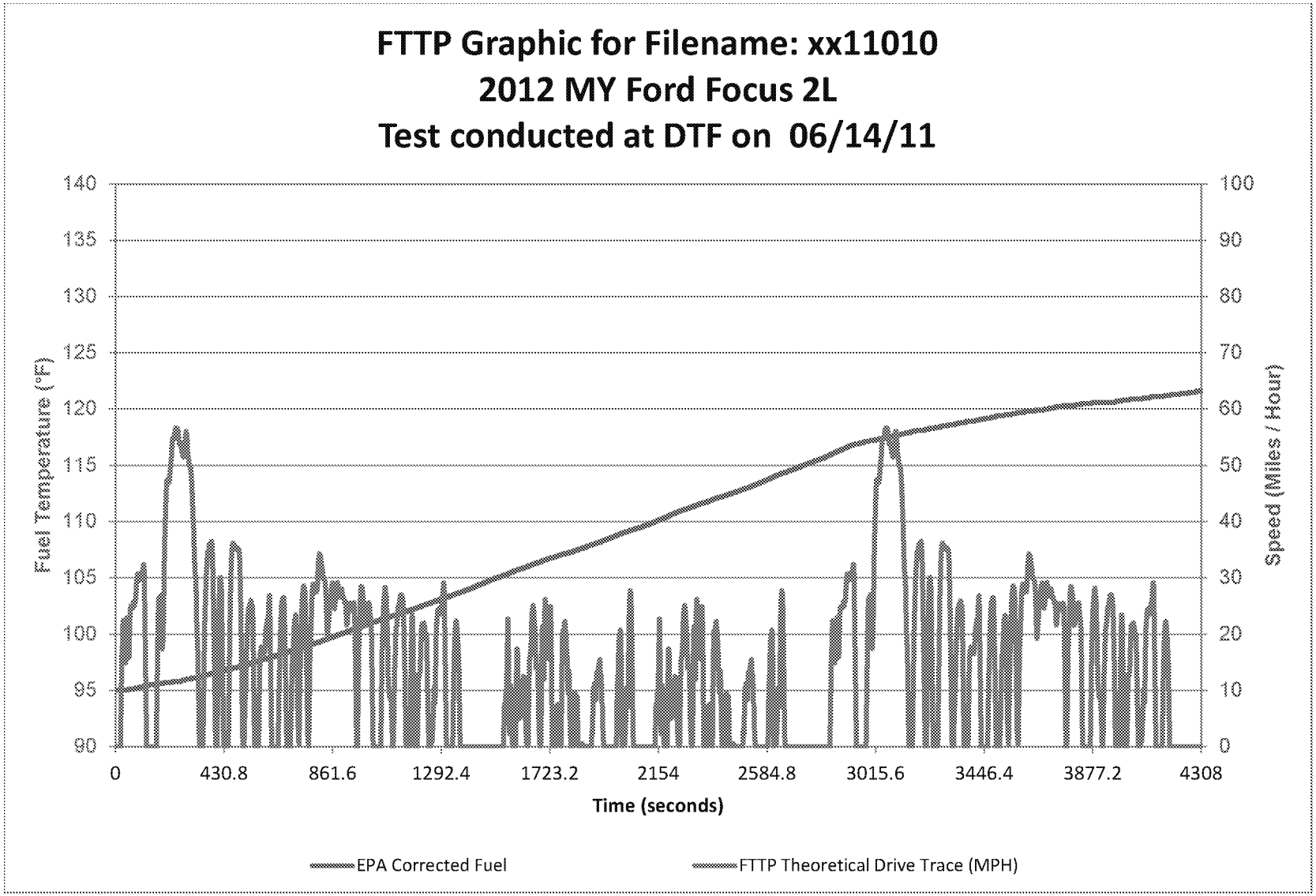
FTTP Graphic for Filename: xx11010
2012 MY Ford Focus 2L
Test conducted at DTF on 06/14/11
Fuel Temperature (°F)
Speed (Miles / Hour)
Time (seconds)
140
135
130
125
120
115
110
105
100
95
90
100
90
80
70
60
50
40
30
20
10
0
0
430.8
861.6
1292.4
1723.2
2154
2584.8
3015.6
3446.4
3877.2
4308
EPA Corrected Fuel
FTTP Theoretical Drive Trace (MPH)

FTTP for Filename: XX11010

Time Sec	Trace Speed MPH	EPA Fuel Temp °F
1	0.0	95.0
61	24.8	95.1
121	9.5	95.4
181	26.6	95.6
241	56.5	95.8
301	48.2	96.0
361	31.4	96.4
421	25.6	96.7
481	35.0	97.0
541	25.0	97.4
601	21.9	97.8
661	25.9	98.3
721	12.6	98.6
781	27.9	99.1
841	19.2	99.6
901	26.6	100.1
961	5.3	100.6
1021	4.3	101.0
1081	15.0	101.5
1141	25.5	101.9
1201	9.8	102.4
1261	6.3	102.9
1321	0.0	103.3
1381	0.0	103.8
1441	0.0	104.4
1501	0.0	104.9
1561	9.3	105.4
1621	10.5	105.9
1681	2.6	106.4
1741	0.0	106.9
1801	10.0	107.3
1861	0.0	107.7
1921	15.4	108.2
1981	0.0	108.7
2041	26.8	109.2
2101	0.0	109.6
2161	13.6	110.2
2221	12.0	110.8
2281	3.5	111.3
2341	0.0	111.7
2401	11.9	112.2
2461	0.1	112.6
2521	15.1	113.1
2581	0.0	113.7
2641	26.1	114.3
2701	0.0	114.7
2761	0.0	115.3
2821	0.0	115.8
2881	24.7	116.4
2941	0.0	116.9
3001	17.6	117.2
3061	56.5	117.5
3121	43.6	117.8
3181	34.7	118.1
3241	7.8	118.3
3301	35.0	118.5
3361	19.1	118.8
3421	22.9	119.0
3481	26.5	119.3
3541	1.8	119.5
3601	28.7	119.7
3661	22.7	119.9
3721	26.2	120.1
3781	18.9	120.3
3841	0.0	120.5
3901	9.4	120.6
3961	17.2	120.6
4021	12.9	120.8
4081	8.3	121.0
4141	0.0	121.1
4201	0.0	121.3
4261	0.0	121.5
4308	0.0	121.6

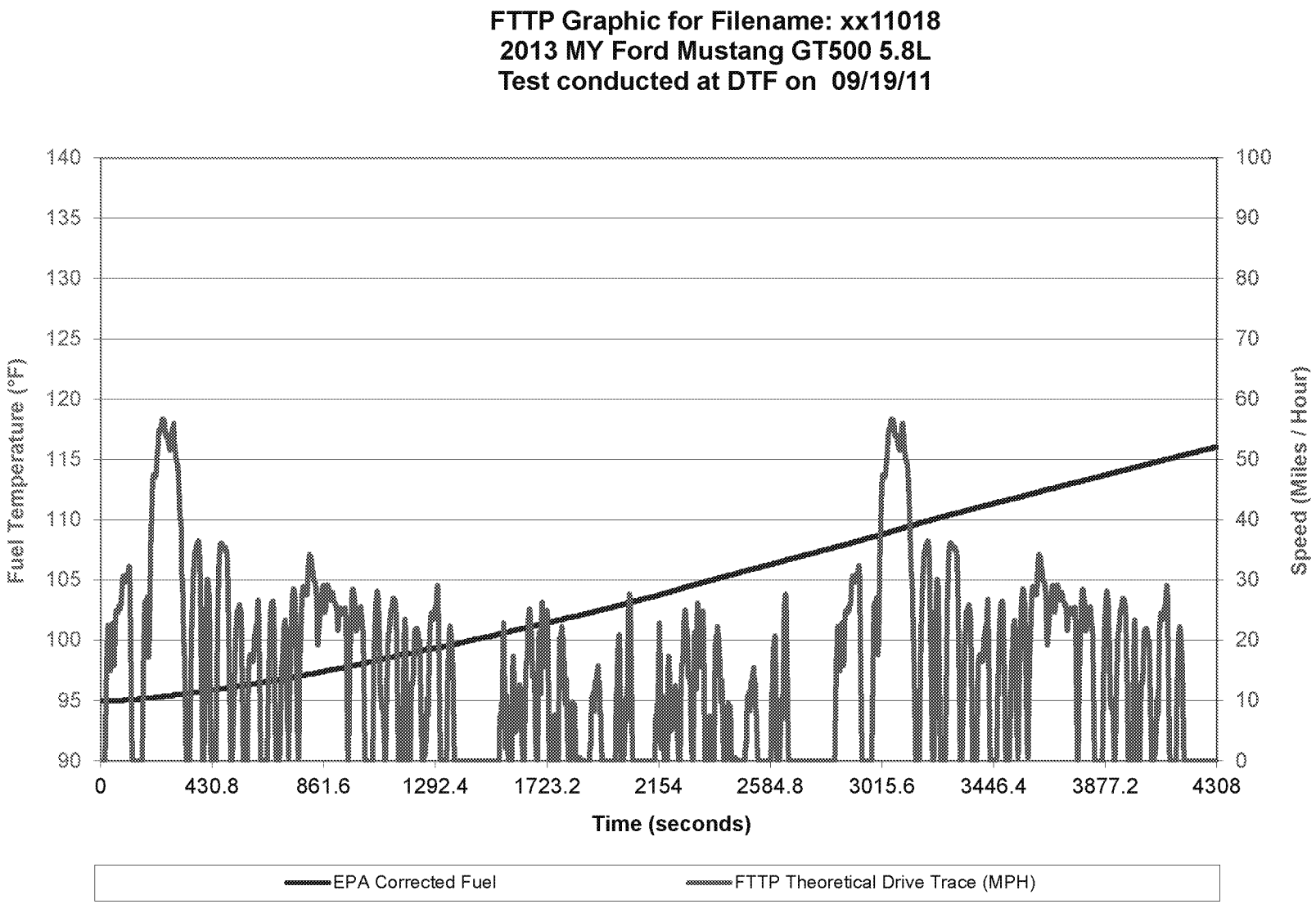
FTTP Graphic for Filename: xx11018
2013 MY Ford Mustang GT500 5.8L
Test conducted at DTF on 09/19/11
Fuel Temperature (°F)
Speed (Miles / Hour)
Time (seconds)
140
135
130
125
120
115
110
105
100
95
90
100
90
80
70
60
50
40
30
20
10
0
0
430.8
861.6
1292.4
1723.2
2154
2584.8
3015.6
3446.4
3877.2
4308
EPA Corrected Fuel
FTTP Theoretical Drive Trace (MPH)

Time Sec	Trace Speed MPH	EPA Fuel Temp °F
0	0.0	95.0
60	25.0	95.0
120	6.8	95.1
180	26.5	95.2
240	56.7	95.3
300	47.4	95.5
360	32.5	95.7
420	23.7	95.9
480	35.2	96.0
540	25.0	96.2
600	22.4	96.4
660	26.2	96.6
720	7.3	96.9
780	28.5	97.1
840	20.9	97.3
900	26.5	97.6
960	10.6	97.8
1020	0.2	98.1
1080	11.3	98.4
1140	23.7	98.7
1200	12.9	98.9
1260	10.0	99.3
1320	0.0	99.5
1380	0.0	99.7
1440	0.0	100.1
1500	0.0	100.3
1560	5.6	100.6
1620	9.9	101.0
1680	1.3	101.2
1740	0.0	101.5
1800	7.1	101.9
1860	0.0	102.1
1920	15.8	102.5
1980	0.0	102.8
2040	27.3	103.1
2100	0.0	103.5
2160	10.2	103.8
2220	10.5	104.2
2280	2.6	104.5
2340	0.0	104.9
2400	10.0	105.2
2460	0.0	105.6
2520	15.4	105.9
2580	0.0	106.3
2640	26.8	106.6
2700	0.0	107.0
2760	0.0	107.3
2820	0.0	107.6
2880	24.8	108.0
2940	0.0	108.3
3000	18.2	108.7
3060	56.3	109.1
3120	42.4	109.5
3180	34.9	109.8
3240	4.5	110.2
3300	35.0	110.5
3360	15.8	110.9
3420	24.0	111.2
3480	26.4	111.5
3540	0.5	111.8
3600	28.5	112.2
3660	23.4	112.6
3720	26.1	112.9
3780	20.2	113.2
3840	0.0	113.5
3900	9.0	113.8
3960	15.6	114.2
4020	13.1	114.5
4080	7.8	114.8
4140	0.0	115.1
4200	0.0	115.5
4260	0.0	115.8
4307	0.0	116.0

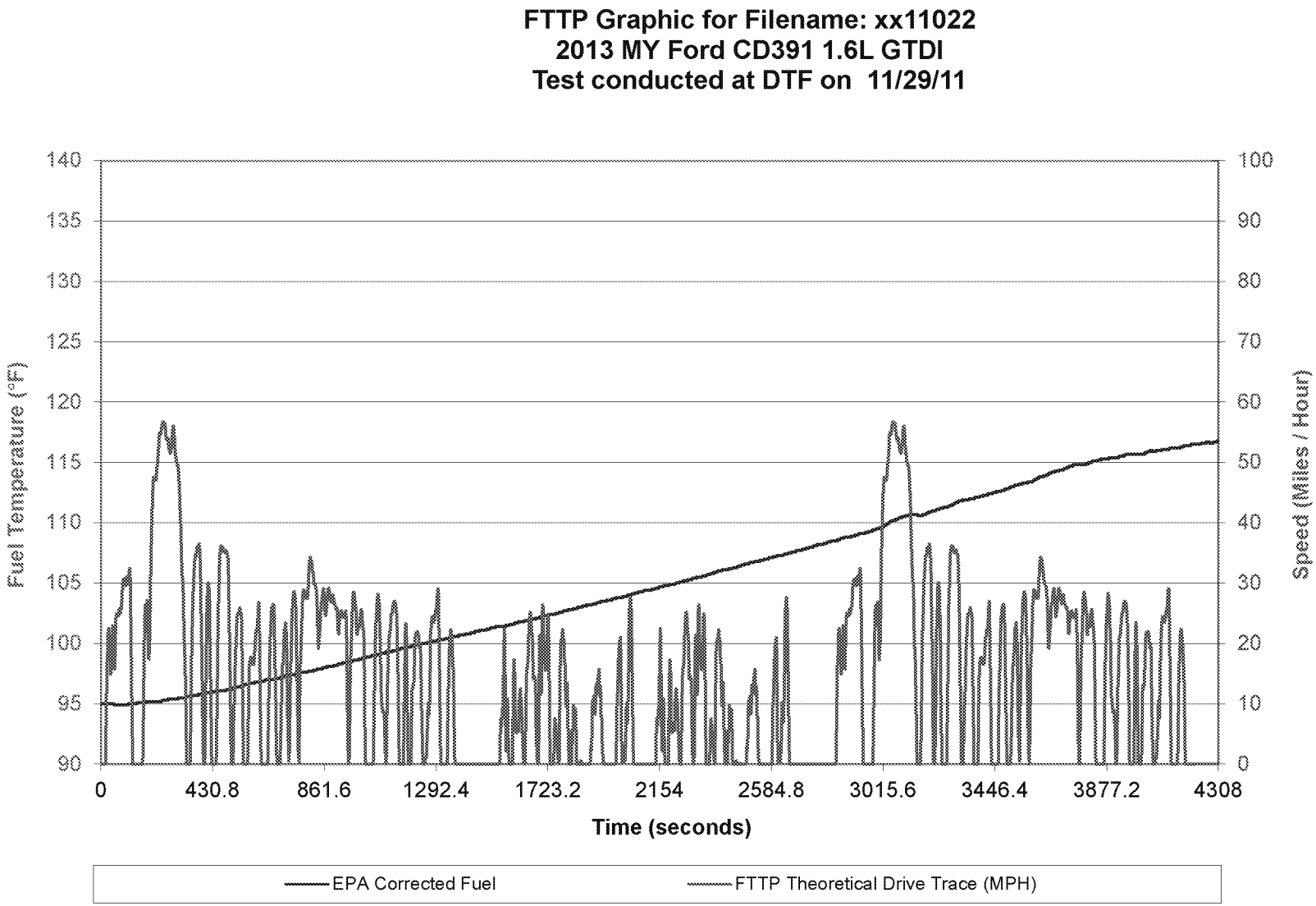
FTTP Graphic for Filename: xx11022
2013 MY Ford CD391 1.6L GTDI
Test conducted at DTF on 11/29/11
Fuel Temperature (°F)
Speed (Miles / Hour)
Time (seconds)
140
135
130
125
120
115
110
105
100
95
90
100
90
80
70
60
50
40
30
20
10
0
0
430.8
861.6
1292.4
1723.2
2154
2584.8
3015.6
3446.4
3877.2
4308
EPA Corrected Fuel
FTTP Theoretical Drive Trace (MPH)

Time Sec	Trace Speed MPH	EPA Fuel Temp °F
0	0.0	95.0
60	24.9	94.9
120	8.1	95.0
180	26.0	95.2
240	56.5	95.3
300	47.9	95.5
360	32.2	95.7
420	21.0	95.9
480	35.1	96.1
540	25.0	96.5
600	22.4	96.8
660	26.1	97.0
720	7.9	97.3
780	28.5	97.6
840	20.4	97.9
900	26.5	98.2
960	9.9	98.5
1020	0.6	98.8
1080	11.8	99.2
1140	24.2	99.5
1200	12.4	99.8
1260	8.8	100.1
1320	0.0	100.3
1380	0.0	100.7
1440	0.0	100.9
1500	0.0	101.2
1560	6.5	101.5
1620	10.0	101.8
1680	1.6	102.1
1740	0.0	102.4
1800	9.0	102.8
1860	0.0	103.1
1920	15.7	103.4
1980	0.0	103.7
2040	27.2	104.0
2100	0.0	104.4
2160	11.1	104.7
2220	10.9	105.0
2280	3.1	105.4
2340	0.0	105.7
2400	10.8	106.1
2460	0.0	106.4
2520	15.3	106.8
2580	0.0	107.1
2640	26.6	107.4
2700	0.0	107.7
2760	0.0	108.2
2820	0.0	108.5
2880	24.8	108.8
2940	0.0	109.1
3000	17.3	109.5
3060	56.5	110.2
3120	42.8	110.7
3180	34.8	110.7
3240	5.2	111.2
3300	35.0	111.7
3360	16.5	112.0
3420	23.7	112.4
3480	26.5	112.7
3540	0.5	113.2
3600	28.5	113.6
3660	23.2	114.1
3720	26.2	114.5
3780	20.0	114.8
3840	0.0	115.1
3900	9.1	115.4
3960	16.0	115.7
4020	13.1	115.7
4080	7.6	116.0
4140	0.0	116.2
4200	0.0	116.4
4260	0.0	116.6
4307	0.0	116.8

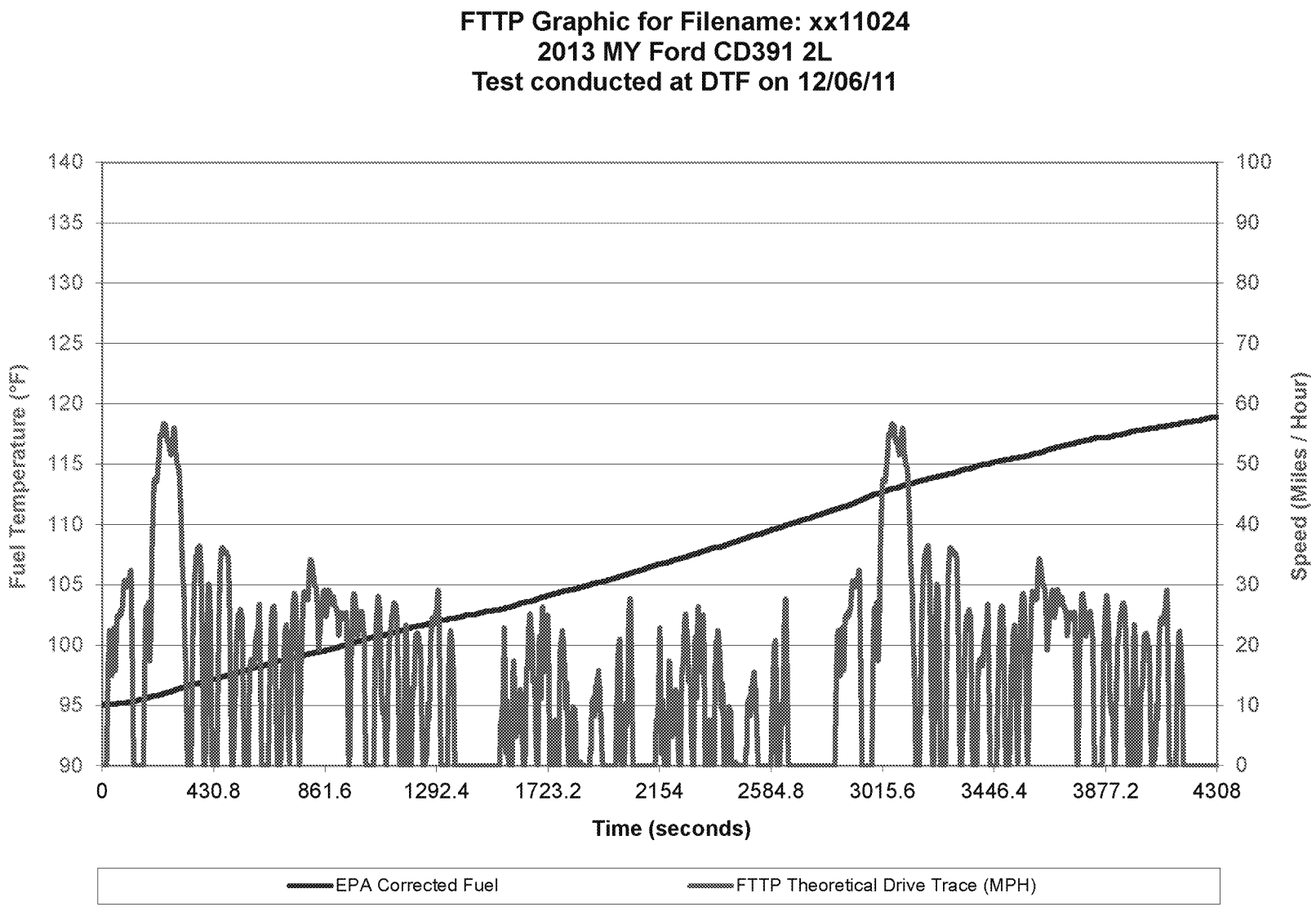
FTTP Graphic for Filename: xx11024
2013 MY Ford CD391 2L
Test conducted at DTF on 12/06/11
Fuel Temperature (°F)
Speed (Miles / Hour)
Time (seconds)
140
135
130
125
120
115
110
105
100
95
90
100
90
80
70
60
50
40
30
20
10
0
0
430.8
861.6
1292.4
1723.2
2154
2584.8
3015.6
3446.4
3877.2
4308
EPA Corrected Fuel
FTTP Theoretical Drive Trace (MPH)

Time Sec	Trace Speed MPH	EPA Fuel Temp °F
0	0.0	95.0
60	24.9	95.2
120	4.8	95.3
180	23.7	95.7
240	56.5	96.0
300	46.5	96.4
360	33.3	96.8
420	16.4	97.1
480	35.4	97.5
540	24.6	97.8
600	22.5	98.2
660	26.2	98.6
720	5.2	98.8
780	28.9	99.2
840	21.2	99.4
900	26.5	99.8
960	13.9	100.1
1020	0.0	100.5
1080	10.8	100.8
1140	22.3	101.1
1200	13.0	101.5
1260	10.4	101.8
1320	0.0	102.1
1380	0.0	102.3
1440	0.0	102.5
1500	0.0	102.8
1560	2.1	103.1
1620	8.9	103.5
1680	0.3	103.8
1740	0.0	104.2
1800	3.2	104.5
1860	0.1	104.9
1920	12.2	105.2
1980	0.0	105.5
2040	27.6	106.0
2100	0.0	106.3
2160	2.5	106.7
2220	9.4	107.1
2280	0.8	107.5
2340	0.0	107.9
2400	5.5	108.2
2460	0.0	108.7
2520	14.0	109.1
2580	0.0	109.5
2640	27.7	109.9
2700	0.0	110.3
2760	0.0	110.7
2820	0.0	111.2
2880	24.6	111.6
2940	0.0	112.1
3000	18.9	112.6
3060	56.0	113.0
3120	39.9	113.3
3180	34.5	113.7
3240	0.0	114.0
3300	34.8	114.3
3360	9.2	114.7
3420	26.1	115.0
3480	25.1	115.3
3540	3.9	115.5
3600	28.3	115.9
3660	25.2	116.2
3720	25.6	116.6
3780	22.2	116.9
3840	0.0	117.2
3900	8.6	117.3
3960	10.0	117.6
4020	14.3	117.8
4080	11.6	118.1
4140	0.0	118.3
4200	0.0	118.5
4260	0.0	118.7
4307	0.0	118.9

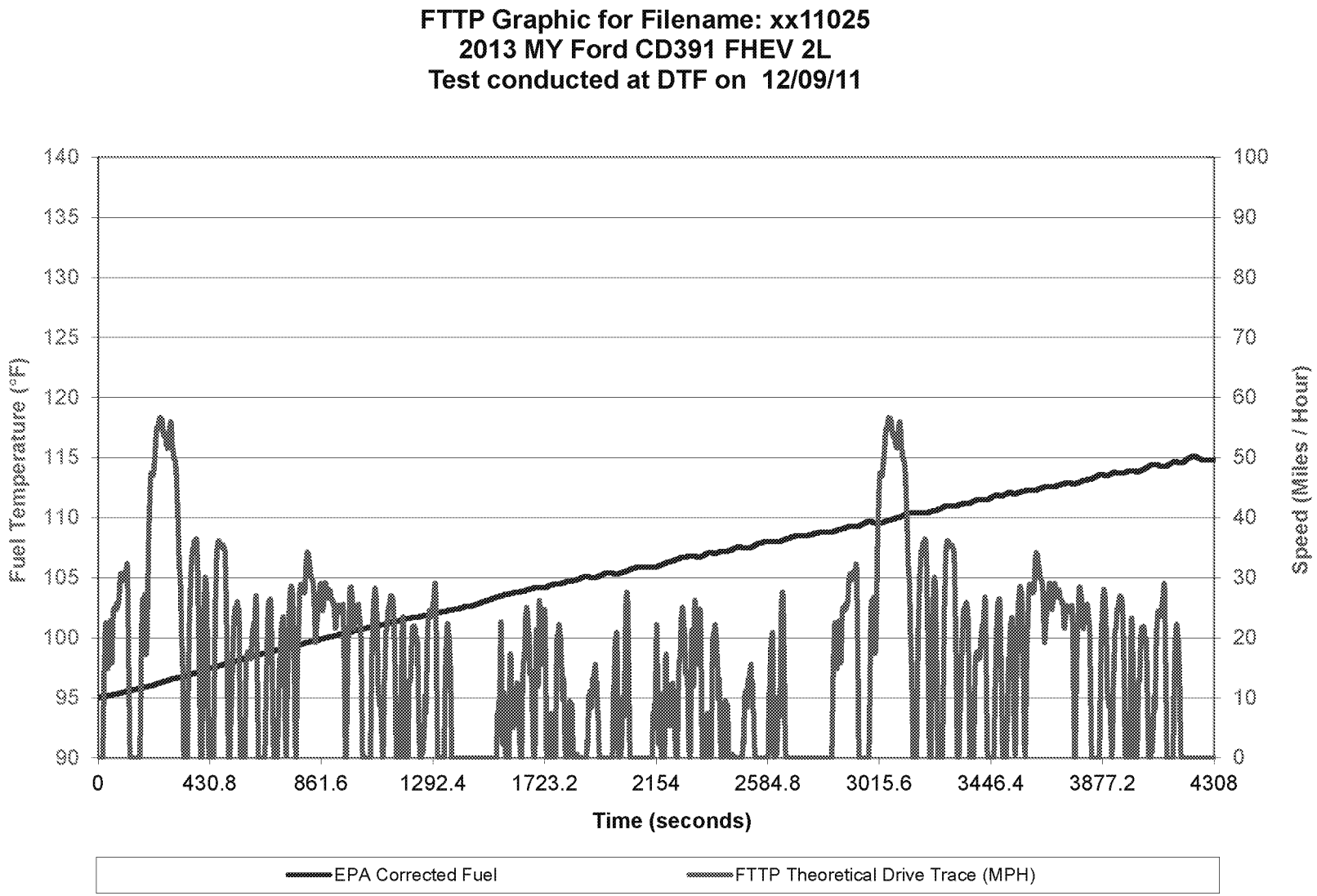
FTTP Graphic for Filename: xx11025
2013 MY Ford CD391 FHEV 2L
Test conducted at DTF on 12/09/11
Fuel Temperature (°F)
Speed (Miles / Hour)
Time (seconds)
140
135
130
125
120
115
110
105
100
95
90
100
90
80
70
60
50
40
30
20
10
0
0
430.8
861.6
1292.4
1723.2
2154
2584.8
3015.6
3446.4
3877.2
4308
EPA Corrected Fuel
FTTP Theoretical Drive Trace (MPH)

FTTP for Filename: XX11025

Time Sec	Trace Speed MPH	EPA Fuel Temp °F
0	0.0	95.0
60	24.9	95.3
120	8.8	95.6
180	26.5	95.9
240	56.5	96.3
300	48.1	96.6
360	32.1	97.0
420	21.7	97.4
480	35.1	97.8
540	25.0	98.2
600	22.4	98.5
660	26.1	98.8
720	9.0	99.1
780	28.3	99.4
840	20.1	99.8
900	26.5	100.1
960	8.6	100.4
1020	1.0	100.7
1080	12.3	101.0
1140	24.6	101.3
1200	12.0	101.6
1260	8.0	101.9
1320	0.0	102.1
1380	0.0	102.4
1440	0.0	102.6
1500	0.0	103.1
1560	5.0	103.5
1620	9.8	103.8
1680	1.2	104.1
1740	0.0	104.3
1800	6.7	104.6
1860	0.0	104.9
1920	15.0	105.0
1980	0.0	105.4
2040	27.5	105.6
2100	0.0	105.9
2160	7.4	106.0
2220	10.2	106.4
2280	1.9	106.8
2340	0.0	106.9
2400	9.3	107.2
2460	0.0	107.5
2520	15.6	107.5
2580	0.0	108.0
2640	27.1	108.1
2700	0.0	108.5
2760	0.0	108.6
2820	0.0	108.8
2880	24.7	109.1
2940	0.0	109.3
3000	17.7	109.6
3060	56.4	109.8
3120	41.9	110.3
3180	34.8	110.4
3240	3.2	110.7
3300	35.0	111.0
3360	14.5	111.2
3420	24.5	111.5
3480	26.2	111.8
3540	0.5	112.0
3600	28.4	112.3
3660	23.7	112.6
3720	26.0	112.8
3780	20.7	112.9
3840	0.0	113.3
3900	8.9	113.5
3960	14.8	113.7
4020	13.1	113.9
4080	8.3	114.4
4140	0.0	114.5
4200	0.0	114.8
4260	0.0	114.8
4307	0.0	114.8

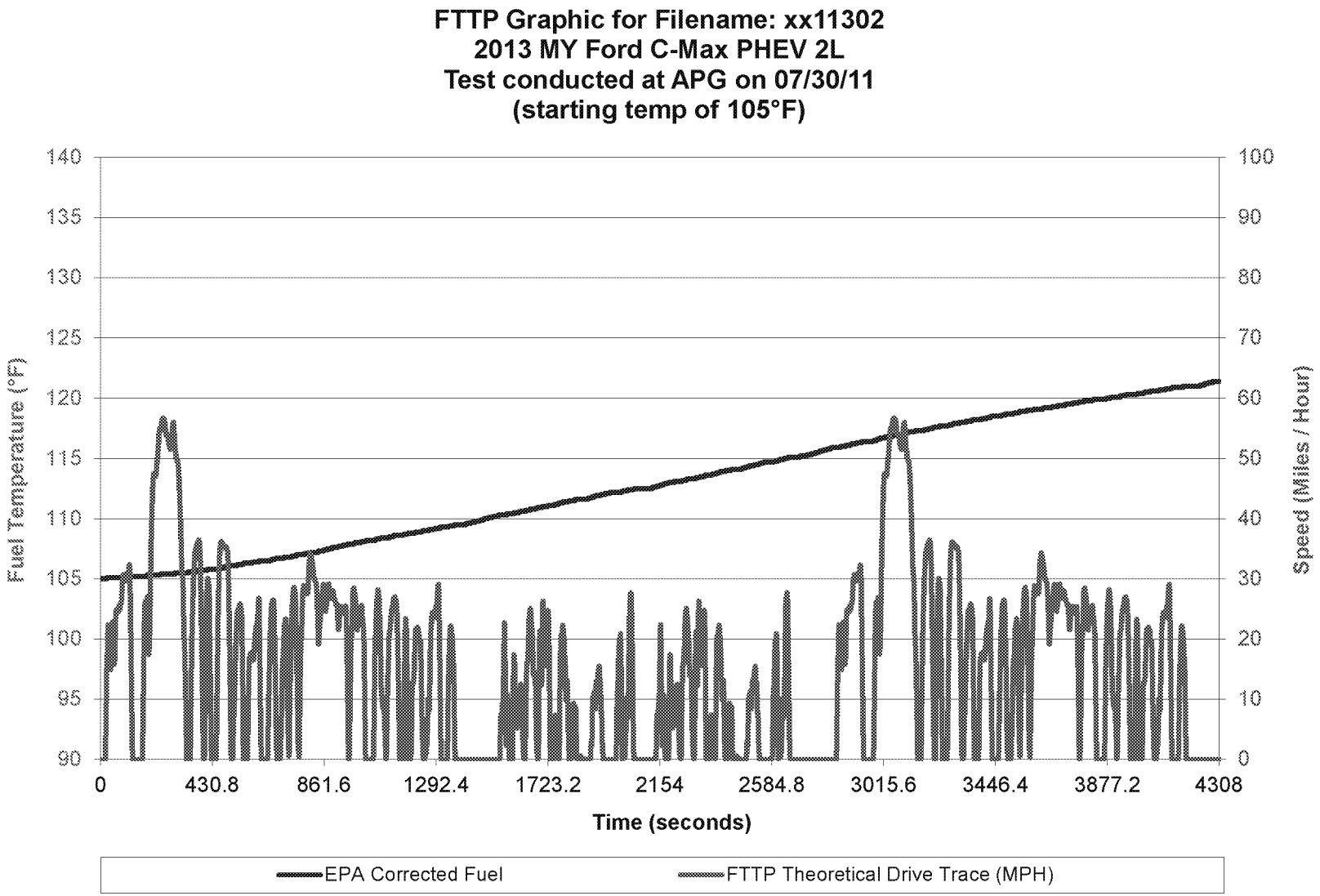
FTTP Graphic for Filename: xx11302
2013 MY Ford C-Max PHEV 2L
Test conducted at APG on 07/30/11
(starting temp of 105°F)
Fuel Temperature (°F)
Speed (Miles / Hour)
Time (seconds)
140
135
130
125
120
115
110
105
100
95
90
100
90
80
70
60
50
40
30
20
10
0
0
430.8
861.6
1292.4
1723.2
2154
2584.8
3015.6
3446.4
3877.2
4308
EPA Corrected Fuel
FTTP Theoretical Drive Trace (MPH)

Time Sec	Trace Speed MPH	CA Fuel Temp °F
0	0.0	105.0
60	24.9	105.1
120	8.1	105.2
180	26.0	105.3
240	56.5	105.4
300	47.9	105.5
360	32.2	105.6
420	21.0	105.8
480	35.1	106.0
540	25.0	106.2
600	22.4	106.4
660	26.1	106.6
720	8.4	106.8
780	28.4	107.0
840	20.3	107.3
900	26.5	107.6
960	9.3	107.9
1020	0.8	108.1
1080	12.1	108.4
1140	24.4	108.6
1200	12.4	108.8
1260	8.8	109.0
1320	0.0	109.3
1380	0.0	109.5
1440	0.0	109.7
1500	0.0	110.1
1560	4.4	110.3
1620	9.7	110.6
1680	1.1	110.9
1740	0.0	111.1
1800	7.4	111.4
1860	0.0	111.6
1920	15.3	111.9
1980	0.0	112.2
2040	27.5	112.4
2100	0.0	112.5
2160	8.4	112.8
2220	10.3	113.1
2280	2.3	113.3
2340	0.0	113.6
2400	9.7	113.9
2460	0.0	114.1
2520	15.5	114.5
2580	0.0	114.7
2640	26.9	115.0
2700	0.0	115.2
2760	0.0	115.5
2820	0.0	115.9
2880	24.8	116.1
2940	0.0	116.4
3000	17.6	116.6
3060	56.5	116.9
3120	42.2	117.2
3180	34.9	117.4
3240	3.9	117.7
3300	35.0	117.9
3360	15.2	118.2
3420	24.3	118.4
3480	26.3	118.6
3540	0.5	118.9
3600	28.4	119.1
3660	23.5	119.2
3720	26.1	119.5
3780	20.4	119.7
3840	0.0	119.9
3900	8.9	120.1
3960	15.2	120.3
4020	13.1	120.5
4080	8.1	120.7
4140	0.0	120.9
4200	0.0	121.0
4260	0.0	121.2
4307	0.0	121.4

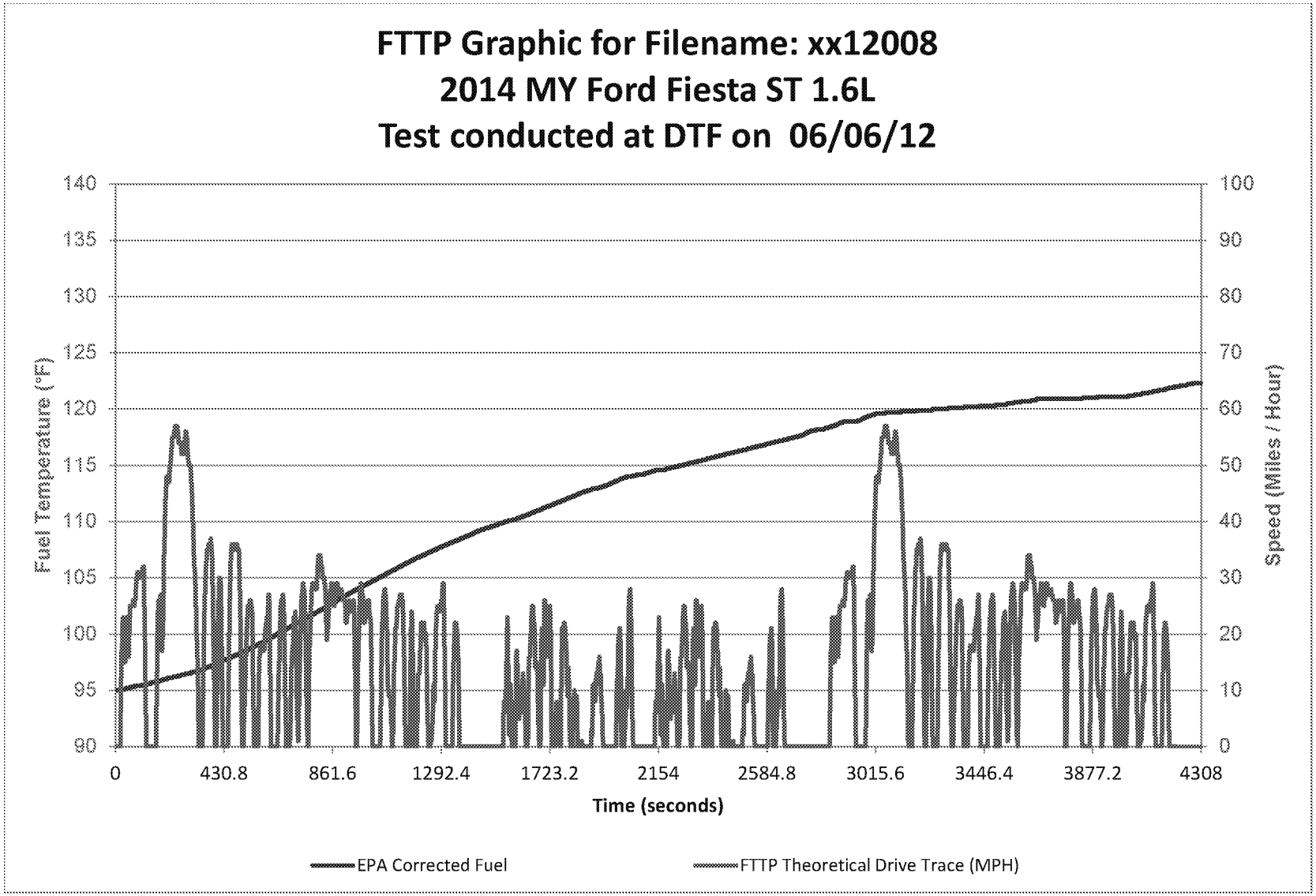
FTTP Graphic for Filename: xx12008
2014 MY Ford Fiesta ST 1.6L
Test conducted at DTF on 06/06/12
Fuel Temperature (°F)
Speed (Miles / Hour)
Time (seconds)
140
135
130
125
120
115
110
105
100
95
90
100
90
80
70
60
50
40
30
20
10
0
0
430.8
861.6
1292.4
1723.2
2154
2584.8
3015.6
3446.4
3877.2
4308
EPA Corrected Fuel
FTTP Theoretical Drive Trace (MPH)

Time Sec	Trace Speed MPH	EPA Fuel Temp °F
1	0.0	95.0
61	25.0	95.3
121	9.0	95.5
181	27.0	95.9
241	57.0	96.2
301	48.0	96.6
361	32.0	97.0
421	22.0	97.6
481	35.0	98.2
541	25.0	98.8
601	22.0	99.5
661	26.0	100.2
721	9.0	101.0
781	28.0	101.7
841	20.0	102.5
901	27.0	103.2
961	9.0	104.0
1021	1.0	104.7
1081	12.0	105.4
1141	25.0	106.1
1201	12.0	106.8
1261	8.0	107.4
1321	0.0	108.0
1381	0.0	108.6
1441	0.0	109.2
1501	0.0	109.6
1561	6.0	110.1
1621	10.0	110.5
1681	1.0	111.0
1741	0.0	111.6
1801	9.0	112.1
1861	0.0	112.7
1921	16.0	113.0
1981	0.0	113.5
2041	27.0	114.0
2101	0.0	114.3
2161	10.0	114.6
2221	11.0	114.9
2281	3.0	115.2
2341	0.0	115.5
2401	10.0	115.9
2461	0.0	116.2
2521	15.0	116.5
2581	0.0	116.9
2641	27.0	117.2
2701	0.0	117.5
2761	0.0	118.1
2821	0.0	118.3
2881	25.0	118.8
2941	0.0	118.9
3001	17.0	119.5
3061	57.0	119.7
3121	43.0	119.8
3181	35.0	119.9
3241	5.0	119.9
3301	35.0	120.0
3361	17.0	120.1
3421	24.0	120.2
3481	27.0	120.3
3541	1.0	120.5
3601	29.0	120.7
3661	23.0	120.9
3721	26.0	120.9
3781	20.0	120.9
3841	0.0	121.0
3901	9.0	121.1
3961	16.0	121.1
4021	13.0	121.2
4081	8.0	121.4
4141	0.0	121.7
4201	0.0	122.0
4261	0.0	122.2
4308	0.0	122.3

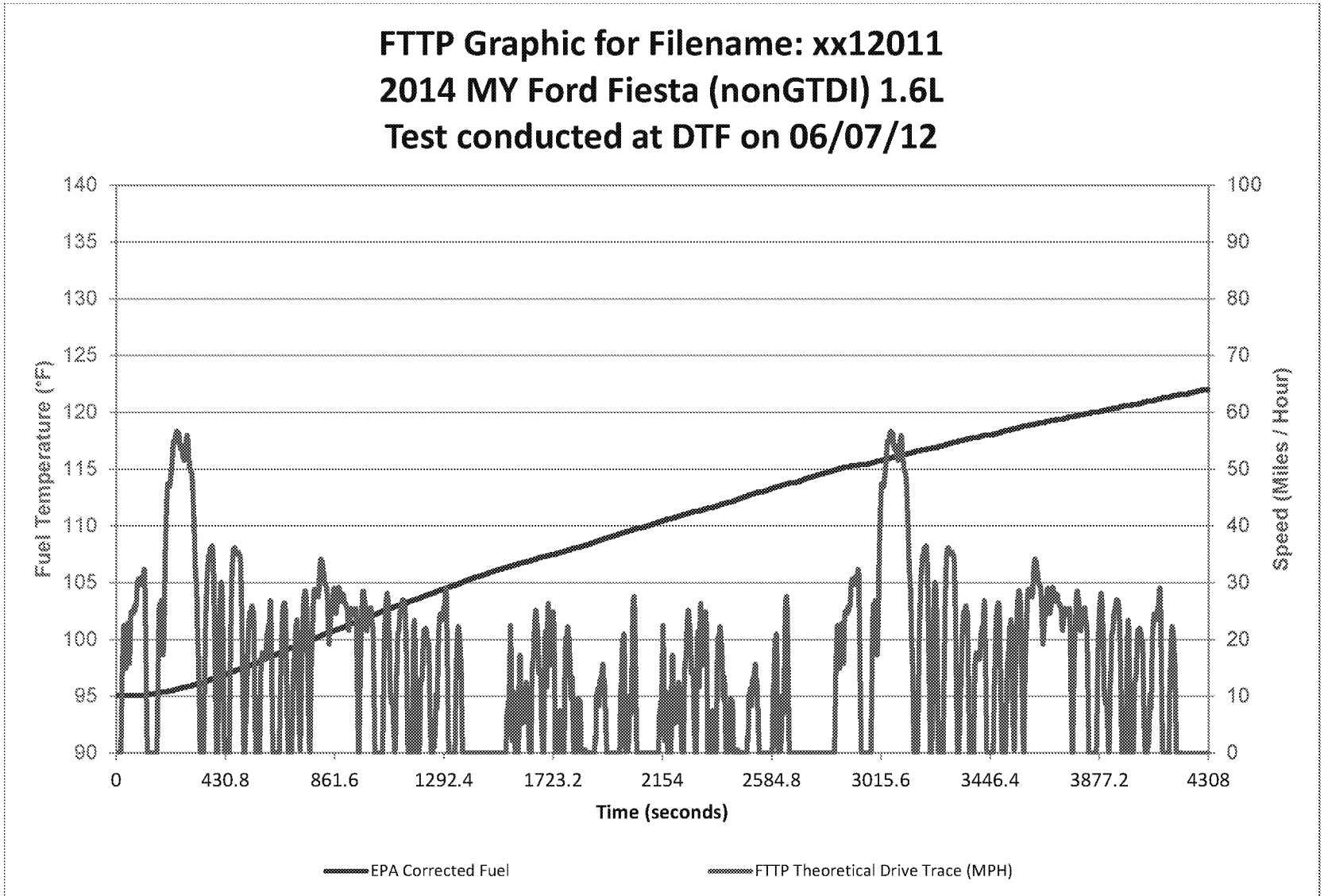
FTTP Graphic for Filename: xx12011
2014 MY Ford Fiesta (nonGTDI) 1.6L
Test conducted at DTF on 06/07/12
Fuel Temperature (°F)
Speed (Miles / Hour)
Time (seconds)
140
135
130
125
120
115
110
105
100
95
90
100
90
80
70
60
50
40
30
20
10
0
0
430.8
861.6
1292.4
1723.2
2154
2584.8
3015.6
3446.4
3877.2
4308
EPA Corrected Fuel
FTTP Theoretical Drive Trace (MPH)

Time Sec	Trace Speed MPH	EPA Fuel Temp °F
1	0.0	95.0
61	24.8	95.1
121	9.5	95.1
181	26.6	95.4
241	56.5	95.6
301	48.2	96.0
361	32.0	96.4
421	22.4	96.9
481	35.1	97.3
541	25.0	97.8
601	22.3	98.4
661	26.1	99.0
721	9.6	99.5
781	28.2	100.0
841	19.9	100.6
901	26.5	101.1
961	7.9	101.7
1021	1.7	102.2
1081	12.8	102.7
1141	24.8	103.2
1201	11.6	103.7
1261	7.7	104.2
1321	0.0	104.7
1381	0.0	105.2
1441	0.0	105.6
1501	0.0	106.1
1561	6.5	106.5
1621	10.0	106.9
1681	1.6	107.3
1741	0.0	107.6
1801	9.0	108.0
1861	0.0	108.4
1921	15.7	108.8
1981	0.0	109.3
2041	27.2	109.7
2101	0.0	110.0
2161	11.1	110.5
2221	10.9	110.9
2281	3.1	111.3
2341	0.0	111.6
2401	10.8	112.0
2461	0.0	112.4
2521	15.3	112.9
2581	0.0	113.3
2641	26.6	113.7
2701	0.0	114.0
2761	0.0	114.4
2821	0.0	114.8
2881	24.8	115.2
2941	0.0	115.4
3001	17.3	115.7
3061	56.5	116.0
3121	42.8	116.4
3181	34.8	116.7
3241	5.9	116.9
3301	35.0	117.4
3361	17.2	117.7
3421	23.5	118.0
3481	26.5	118.2
3541	0.8	118.6
3601	28.6	118.9
3661	23.1	119.1
3721	26.2	119.4
3781	19.7	119.7
3841	0.0	119.9
3901	9.2	120.2
3961	16.3	120.5
4021	13.0	120.7
4081	7.8	121.0
4141	0.0	121.3
4201	0.0	121.6
4261	0.0	121.8
4308	0.0	122.0

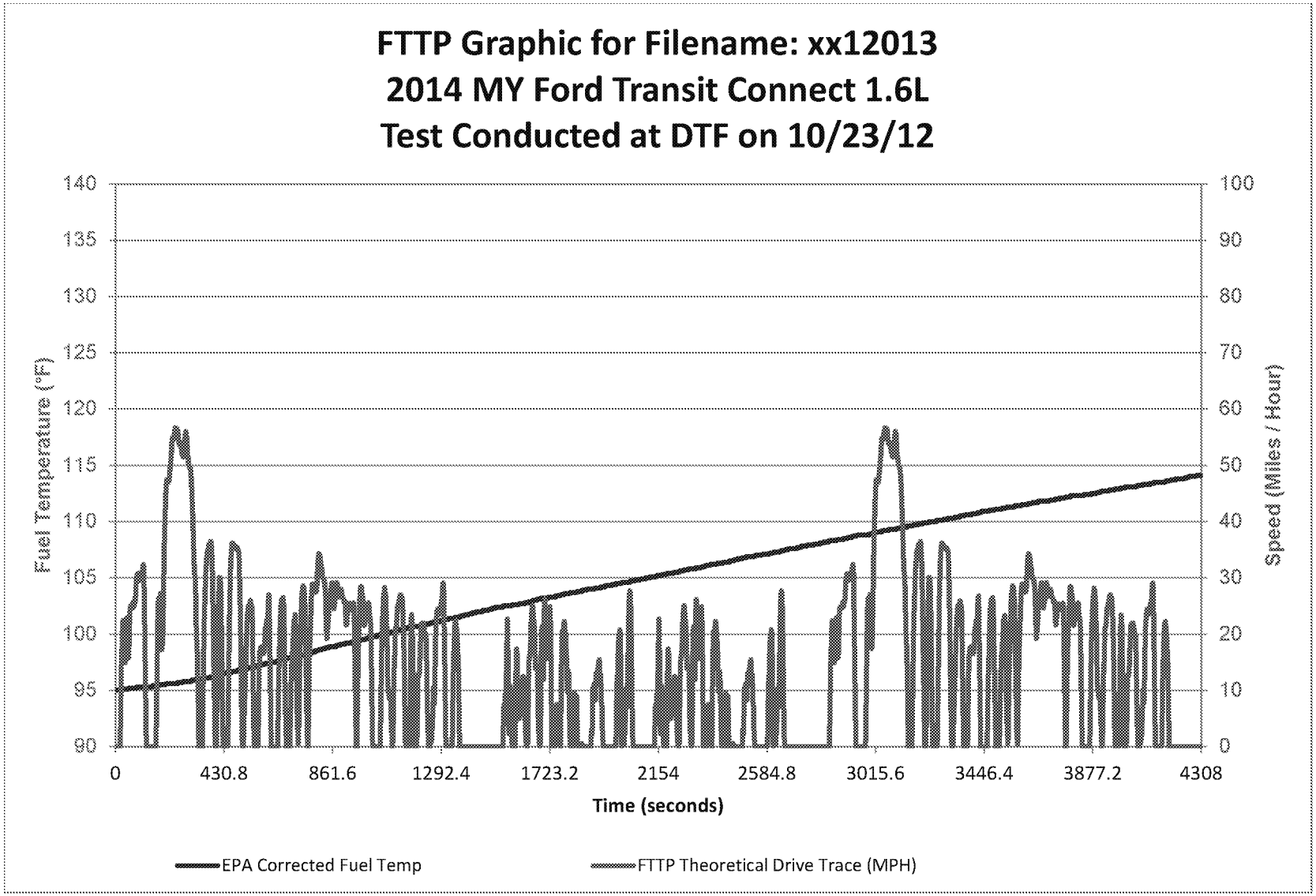
FTTP Graphic for Filename: xx12013
2014 MY Ford Transit Connect 1.6L
Test Conducted at DTF on 10/23/12
Fuel Temperature (°F)
Speed (Miles / Hour)
Time (seconds)
140
135
130
125
120
115
110
105
100
95
90
100
90
80
70
60
50
40
30
20
10
0
0
430.8
861.6
1292.4
1723.2
2154
2584.8
3015.6
3446.4
3877.2
4308
EPA Corrected Fuel Temp
FTTP Theoretical Drive Trace (MPH)

FTTP for Filename: XX12013

Time Sec	Trace Speed MPH	EPA Fuel Temp °F
1	0.0	95.0
61	25.0	95.2
121	5.5	95.3
181	24.0	95.5
241	56.5	95.6
301	47.2	95.9
361	32.8	96.1
421	18.4	96.4
481	35.2	96.7
541	25.0	97.0
601	22.5	97.4
661	26.2	97.7
721	6.2	98.0
781	28.9	98.4
841	20.9	98.8
901	26.5	99.1
961	11.9	99.4
1021	0.0	99.8
1081	11.1	100.1
1141	23.5	100.4
1201	12.9	100.7
1261	10.0	101.0
1321	0.0	101.3
1381	0.0	101.6
1441	0.0	102.0
1501	0.0	102.3
1561	2.4	102.5
1621	9.3	102.7
1681	0.7	103.1
1741	0.0	103.3
1801	5.0	103.6
1861	0.0	103.9
1921	14.0	104.1
1981	0.0	104.4
2041	27.7	104.7
2101	0.0	104.9
2161	5.0	105.2
2221	9.8	105.5
2281	1.2	105.8
2341	0.0	106.1
2401	8.0	106.3
2461	0.0	106.6
2521	15.5	106.9
2581	0.0	107.1
2641	27.4	107.4
2701	0.0	107.6
2761	0.0	107.9
2821	0.0	108.2
2881	24.7	108.4
2941	0.0	108.8
3001	18.2	108.9
3061	56.3	109.2
3121	41.3	109.5
3181	34.7	109.7
3241	1.5	110.0
3301	35.0	110.2
3361	12.5	110.5
3421	25.3	110.8
3481	25.9	111.0
3541	1.0	111.3
3601	28.3	111.5
3661	24.2	111.8
3721	25.8	111.9
3781	21.3	112.2
3841	0.0	112.4
3901	8.7	112.6
3961	13.3	112.8
4021	13.3	113.1
4081	9.2	113.3
4141	0.0	113.5
4201	0.0	113.7
4261	0.0	114.0
4308	0.0	114.1

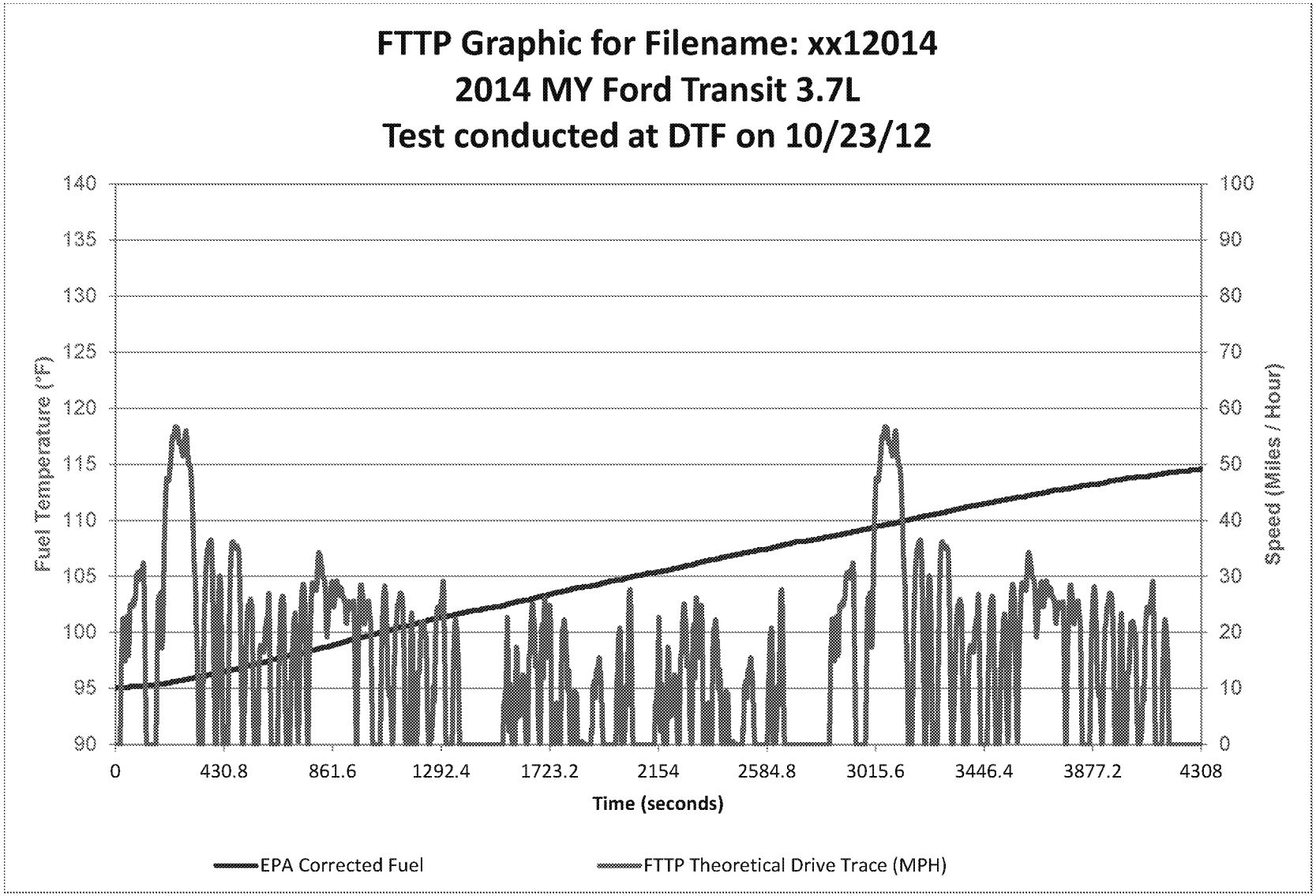
FTTP Graphic for Filename: xx12014
2014 MY Ford Transit 3.7L
Test conducted at DTF on 10/23/12
Fuel Temperature (°F)
Speed (Miles / Hour)
Time (seconds)
140
135
130
125
120
115
110
105
100
95
90
100
90
80
70
60
50
40
30
20
10
0
0
430.8
861.6
1292.4
1723.2
2154
2584.8
3015.6
3446.4
3877.2
4308
EPA Corrected Fuel
FTTP Theoretical Drive Trace (MPH)

Time Sec	Trace Speed MPH	EPA Fuel Temp °F
1	0.0	95.1
61	25.0	95.2
121	5.5	95.3
181	24.0	95.4
241	56.5	95.6
301	47.2	95.9
361	32.8	96.2
421	18.4	96.5
481	35.2	96.7
541	25.0	97.1
601	22.5	97.4
661	26.2	97.8
721	6.2	98.0
781	28.9	98.4
841	20.9	98.7
901	26.5	99.1
961	11.9	99.5
1021	0.0	99.8
1081	11.1	100.1
1141	23.5	100.5
1201	12.9	100.8
1261	10.0	101.2
1321	0.0	101.5
1381	0.0	101.8
1441	0.0	102.0
1501	0.0	102.3
1561	2.4	102.5
1621	9.3	102.9
1681	0.7	103.2
1741	0.0	103.5
1801	5.0	103.8
1861	0.0	104.1
1921	14.0	104.3
1981	0.0	104.6
2041	27.7	104.9
2101	0.0	105.2
2161	5.0	105.4
2221	9.8	105.7
2281	1.2	106.0
2341	0.0	106.4
2401	8.0	106.7
2461	0.0	106.9
2521	15.5	107.2
2581	0.0	107.4
2641	27.4	107.8
2701	0.0	108.1
2761	0.0	108.2
2821	0.0	108.5
2881	24.7	108.8
2941	0.0	109.0
3001	18.2	109.3
3061	56.3	109.6
3121	41.3	109.9
3181	34.7	110.2
3241	1.5	110.5
3301	35.0	110.8
3361	12.5	111.1
3421	25.3	111.4
3481	25.9	111.6
3541	1.0	111.9
3601	28.3	112.1
3661	24.2	112.4
3721	25.8	112.7
3781	21.3	112.8
3841	0.0	113.1
3901	8.7	113.2
3961	13.3	113.5
4021	13.3	113.8
4081	9.2	113.9
4141	0.0	114.1
4201	0.0	114.3
4261	0.0	114.4
4308	0.0	114.6

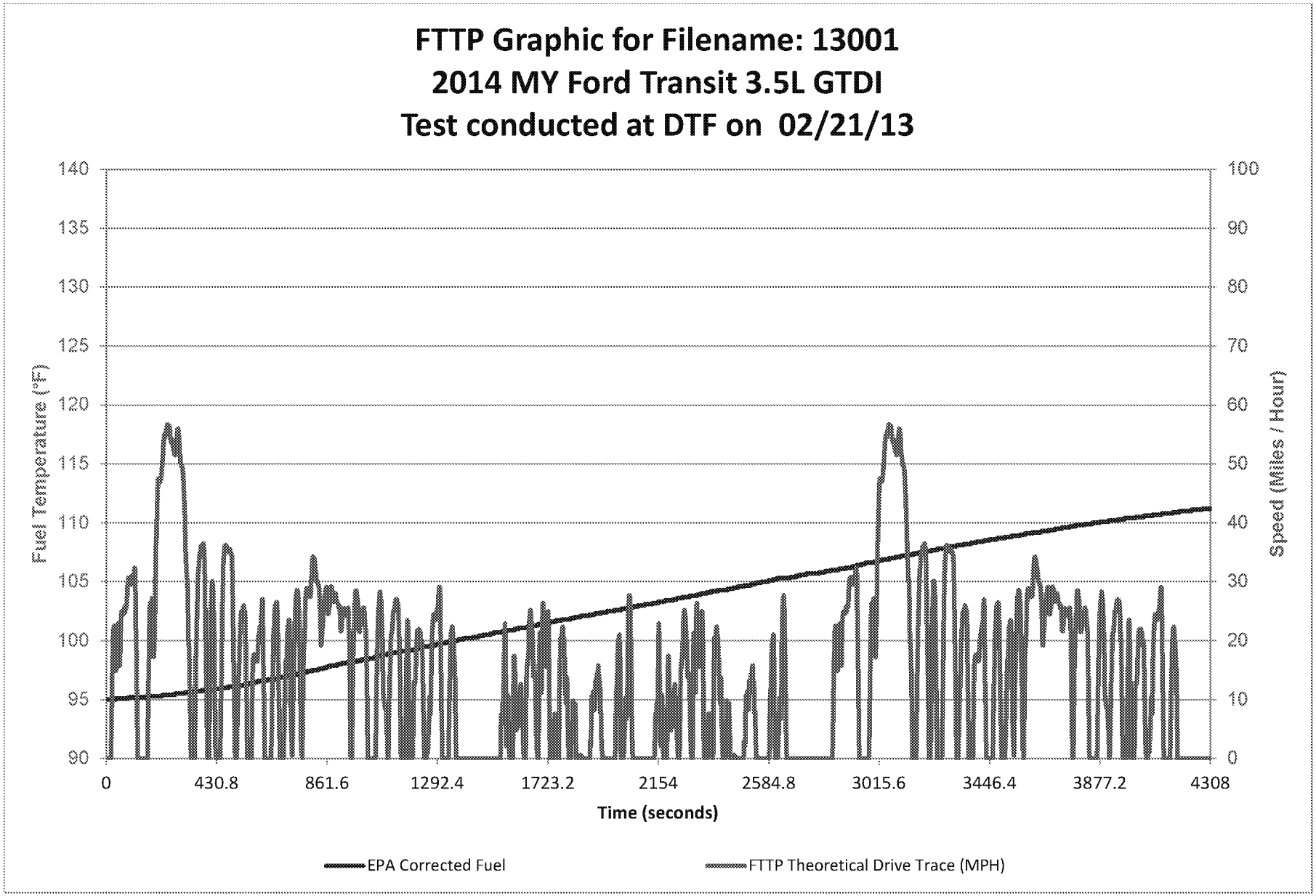
FTTP Graphic for Filename: 13001
2014 MY Ford Transit 3.5L GTDI
Test conducted at DTF on 02/21/13
Fuel Temperature (°F)
Speed (Miles / Hour)
Time (seconds)
140
135
130
125
120
115
110
105
100
95
90
100
90
80
70
60
50
40
30
20
10
0
0
430.8
861.6
1292.4
1723.2
2154
2584.8
3015.6
3446.4
3877.2
4308
EPA Corrected Fuel
FTTP Theoretical Drive Trace (MPH)

FTTP for Filename: 13001

Time Sec	Trace Speed MPH	EPA Fuel Temp °F
1	0.0	95.0
61	26.2	95.1
121	7.9	95.2
181	24.8	95.3
241	57.0	95.4
301	48.1	95.5
361	33.3	95.7
421	22.5	95.9
481	34.8	96.1
541	25.7	96.2
601	22.9	96.6
661	26.1	96.8
721	10.2	97.1
781	27.9	97.3
841	19.7	97.6
901	27.5	97.9
961	9.4	98.2
1021	1.6	98.4
1081	13.4	98.8
1141	24.1	99.0
1201	12.7	99.2
1261	6.1	99.5
1321	0.0	99.8
1381	0.0	100.1
1441	-0.1	100.3
1501	0.0	100.6
1561	8.5	100.8
1621	8.4	101.1
1681	2.4	101.3
1741	0.1	101.6
1801	6.6	101.8
1861	0.0	102.1
1921	14.7	102.3
1981	-0.1	102.5
2041	26.3	102.8
2101	0.0	103.0
2161	12.7	103.3
2221	11.4	103.5
2281	3.1	103.8
2341	0.0	104.0
2401	9.2	104.3
2461	0.0	104.5
2521	13.9	104.8
2581	0.0	105.0
2641	25.1	105.3
2701	0.0	105.5
2761	0.0	105.7
2821	-0.1	105.9
2881	25.7	106.1
2941	0.0	106.4
3001	17.0	106.7
3061	55.3	107.0
3121	43.4	107.2
3181	34.1	107.5
3241	5.2	107.7
3301	34.8	108.0
3361	16.3	108.2
3421	23.5	108.4
3481	25.2	108.7
3541	0.8	108.9
3601	30.2	109.1
3661	22.6	109.3
3721	26.3	109.5
3781	20.3	109.7
3841	0.0	109.9
3901	10.0	110.1
3961	14.9	110.3
4021	12.4	110.5
4081	9.1	110.6
4141	0.0	110.8
4201	0.0	111.0
4261	0.0	111.1
4307	0.0	114.6

12.02.02.01 – Wind Tunnel FTTP Procedure

- Please refer to the letter with subject "Request to Use Indoor Facility to Determine Running Loss Fuel Tank Temperature Profiles" from Dave Kulp (Ford Motor Company) to Thomas Ball (EPA) dated November 20, 1996 and Reviewed and Accepted on March 21, 1997.
- Please refer to the letter with subject "Indoor Facility to Determine Running Loss Fuel Tank Temperature Profiles (FTTPs)" from Dave Kulp (Ford Motor Company) to R.B. Summerfield (CARB) dated June 2, 1997.
- Please refer to the letter with subject "Request to Use New Indoor Facility to Determine Fuel Tank Temperature Profiles" from Neil Whitbeck (Ford Motor Company) to E. A. Bontekoe (EPA) dated August 6, 2001 and Reviewed and Accepted on October 30, 2001.
- Please refer to the letter with subject "New Indoor Facility to Determine Running Loss Fuel Tank Temperature Profiles (FTTPs)" from Dave Kulp (Ford Motor Company) to R. B. Summerfield (EPA) dated July 9, 2002.
- Please refer to the letter with subject "Fuel Tank Temperature Profile (FTTP) Correlation Demonstration – Laboratory versus Track" from Dennis Pawlak (Ford Motor Company) to M. Reineman (EPA) dated December 2, 2005 and Reviewed and Accepted on December 2, 2005.

2014 MY
Emission Certification
Transmission Identification Chart

Program	Vehicle Name	Transmission	Engine	Conv. Dia.	K-Factor	Program Code	CFDR	Torque Converter Designation	Part 1 Code		Nominal Torque Ratio	Nominal K	Stall Torque Ratio		Stall Speed RPM@Torque	
Front Wheel Drive													lower	upper	lower	upper
B299N	Fiesta	DPS6	1.6L TiVCT	NA	NA	CQ	3.9	N	CQ	390 N	NA	NA	NA	NA	NA	NA
C346N	N. American Focus	DPS6	2.0L GDI	NA	NA	CW	3.85	N	CW	385 N	NA	NA	NA	NA	NA	NA
C346N	N. American Focus	Magna BEV	N/A	NA	NA	WA	7.82	1	WA	782	NA	NA	NA	NA	NA	NA
C307	China Focus	4F27E	1.8L I4	9 1/4"	250	D2	4.2	C	D2	420 C	2.1	250	1.6	2.6	2380	2790
C520 FWD	Escape	6F35	2.5L I4	10.93	213	W6	3.51	A	W6	351 A	1.95	213	1.85	2.05	2499	2719
U502/U387 FWD/ D472 FWD	Explorer/Edge/ Limo	6F35	2.0L I4	11.03	235	W6	3.36	B	W6	336 B	2	235	1.9	2.1	2768	2989
U502 FWD	Explorer	6F35	2.0L I4	11.03	235	W6	3.51	B	W6	351 B	2	235	1.9	2.1	2768	2989
U387 FWD	Edge	6F35	2.0L I4	11.03	235	W6	3.21	B	W6	321 B	2	235	1.9	2.1	2768	2989
CD391 FWD	Fusion/Milan	6F35	2.5L I4	10.93	213	W6	3.07	A	W6	307 A	1.95	213	1.85	2.05	2499	2719
C520 FWD/AWD D258 FWD	Escape Taurus	6F35	2.0L I4	11.03	235	W6	3.07	B	W6	307 B	2	235	1.9	2.1	2572	2793
C520 FWD	Escape	6F35	1.6L I4	10.5	234	W6	3.21	C	W6	321 C	1.9	234	1.8	2	2588	2860
C520 AWD	Escape	6F35	1.6L I4	10.5	234	W6	3.51	C	W6	351 C	1.9	234	1.8	2	2588	2860
CD391 FWD	Fusion/Milan	6F35	2.0L I4	10.96	235	W6	3.21	D	W6	321 D	1.94	235	1.84	2.03	2775	3066
CD391 AWD	Fusion/Milan	6F35	2.0L I4	10.96	235	W6	3.36	D	W6	336 D	1.94	235	1.84	2.03	2775	3066
CD391 FWD	Fusion/Milan	6F35	1.6L I4	10.5	234	W6	3.07	C	W6	307 C	1.9	234	1.8	2	2588	2860
CD391 FWD	Fusion/Milan	6F35	1.6L I4	10.5	234	W6	3.21	C	W6	321 C	1.9	234	1.8	2	2588	2860
CD391 FWD	Fusion/Milan	6F35	1.5L I4	10.5	265	W6	3.21	E	W6	321 E	2.3	265	2.18	2.42	3078	3407
CD391 FWD	Fusion/Milan	6F35	1.5L I4	10.5	265	W6	3.07	E	W6	307 E	2.3	265	2.18	2.42	3078	3407
V408 FWD	Transit	6F35	2.5L I4	10.93	213	W6	3.51	A	W6	351 A	1.95	213	1.85	2.05	2499	2719
CD533 FWD	GOBI / MKX	6F35	2.0L I4	10.96	235	W6	3.21	D	W6	321 D	1.94	235	1.84	2.03	2775	3066
CD539 FWD	Edge	6F35	2.0L I4	10.96	235	W6	3.21	D	W6	321 D	1.94	235	1.84	2.03	2775	3066
CD539 AWD	Edge	6F35	2.0L I4	10.96	235	W6	3.36	D	W6	336 D	1.94	235	1.84	2.03	2775	3066
C489 FWD	MKC	6F35	2.0L I4	11.03	235	W6	3.36	B	W6	336 B	2	235	1.9	2.1	2572	2793
C489 AWD	MKC	6F35	2.0L I4	11.03	235	W6	3.51	B	W6	351 B	2	235	1.9	2.1	2572	2793
C489 AWD	MKC	6F35	2.3L I4	11.02	231	W6	3.51	F	W6	351 F	1.9	231	1.8	2	2683	2977

2014 MY
Emission Certification
Transmission Identification Chart

Program	Vehicle Name	Transmission	Engine	Conv. Dia.	K-Factor	Program Code	CFDR	Torque Converter Designation	Part 1 Code	Nominal Torque Ratio	Nominal K	Stall Torque Ratio		Stall Speed RPM@Torque	
U387 FWD	Edge	6F50	3.5L TiVCT	9.7	160	WJ	3.16	D	WJ 316 D	1.8	160	1.3	2.3	1560	2360
U387 AWD	Edge	6F50	3.5L TiVCT	9.7	160	WJ	3.16	D	WJ 316 D	1.8	160	1.3	2.3	1560	2360
U387 AWD	Edge	6F50	3.5L TiVCT	9.7	160	WJ	3.39	D	WJ 339 D	1.8	160	1.3	2.3	1560	2360
U387 FWD	Edge Sport	6F50	3.7L TiVCT	9.7	160	WJ	3.16	D	WJ 316 D	1.8	160	1.3	2.3	1560	2360
U387 AWD	Edge Sport	6F50	3.7L TiVCT	9.7	160	WJ	3.39	D	WJ 339 D	1.8	160	1.3	2.3	1560	2360
U388 FWD	MKX	6F50	3.7L TiVCT	9.7	160	WJ	3.16	D	WJ 316 D	1.8	160	1.3	2.3	1560	2360
U388 AWD	MKX	6F50	3.7L TiVCT	9.7	160	WJ	3.39	D	WJ 339 D	1.8	160	1.3	2.3	1560	2360
D472 FWD	MKT	6F50	3.7L TiVCT	9.7	160	WJ	3.16	D	WJ 316 D	1.8	160	1.3	2.3	1560	2360
D258 FWD	Taurus	6F50	3.5L TiVCT	9.7	160	WJ	2.77	D	WJ 277 D	1.8	160	1.3	2.3	1560	2360
D258 FWD	Taurus	6F50	3.5L TiVCT	9.7	160	WJ	3.16	D	WJ 316 D	1.8	160	1.3	2.3	1560	2360
D258 FWD	Police Int. Sedan	6F50	3.5L TiVCT	9.7	160	WJ	3.16	D	WJ 316 D	1.8	160	1.3	2.3	1560	2360
D258 AWD	Taurus	6F50	3.5L TiVCT	9.7	160	WJ	3.39	D	WJ 339 D	1.8	160	1.3	2.3	1560	2360
D258 AWD	Police Int. Sedan	6F50	3.7L TiVCT	9.7	160	WJ	3.39	D	WJ 339 D	1.8	160	1.3	2.3	1560	2360
D385FWD	MKS	6F50	3.7L TiVCT	9.7	160	WJ	3.16	D	WJ 316 D	1.8	160	1.3	2.3	1560	2360
D385AWD	MKS	6F50	3.7L TiVCT	9.7	160	WJ	3.39	D	WJ 339 D	1.8	160	1.3	2.3	1560	2360
U502 FWD	Explorer	6F50	3.5L TiVCT	9.7	160	WJ	3.39	D	WJ 339 D	1.8	160	1.3	2.3	1560	2360
U502 AWD	Explorer	6F50	3.5L TiVCT	9.7	160	WJ	3.65	D	WJ 365 D	1.8	160	1.3	2.3	1560	2360
CD533 FWD	MKZ	6F50	3.7L TiVCT	9.7	160	WJ	3.39	D	WJ 339 D	1.8	160	1.3	2.3	1560	2360
CD533 AWD	MKZ	6F50	3.7L TiVCT	9.7	160	WJ	3.65	D	WJ 365 D	1.8	160	1.3	2.3	1560	2360
D471FWD	FLEX	6F50	3.5L TiVCT	9.7	160	WJ	3.39	D	WJ 339 D	1.8	160	1.3	2.3	1560	2360
D471AWD	FLEX	6F50	3.5L TiVCT	9.7	160	WJ	3.65	D	WJ 365 D	1.8	160	1.3	2.3	1560	2360

2014 MY
Emission Certification
Transmission Identification Chart

Program	Vehicle Name	Transmission	Engine	Conv. Dia.	K-Factor	Program Code	CFDR	Torque Converter Designation	Part 1 Code			Nominal Torque Ratio	Nominal K	Stall Torque Ratio		Stall Speed RPM@Torque	
D258 AWD	Taurus SHO	6F55	3.5 V6 (GTDI)	9.7	160	CG	2.77	D	CG	277	D	1.8	160	1.3	2.3	1560	2360
D258 AWD	Taurus SHO TrackPack	6F55	3.5 V6 (GTDI)	9.7	160	CG	3.16	D	CG	316	D	1.8	160	1.3	2.3	1560	2360
D385AWD	MKS	6F55	3.5 V6 (GTDI)	9.7	160	CG	2.77	D	CG	277	D	1.8	160	1.3	2.3	1560	2360
D258 AWD	Police Int. Sedan	6F55	3.5 V6 (GTDI)	9.7	160	CG	3.16	D	CG	316	D	1.8	160	1.3	2.3	1560	2360
D472 AWD	Livery	6F55	3.5 V6 (GTDI)	9.7	160	CG	3.16	D	CG	316	D	1.8	160	1.3	2.3	1560	2360
U502 AWD	Explorer Sport	6F55	3.5 V6 (GTDI)	9.7	160	CG	3.16	D	CG	316	D	1.8	160	1.3	2.3	1560	2360
U502 AWD	Police Int. Utility	6F55	3.5 V6 (GTDI)	9.7	160	CG	3.16	D	CG	316	D	1.8	160	1.3	2.3	1560	2360
U502 FWD	Explorer Trailer Tow	6F55	3.5L TiVCT	9.7	160	CG	3.39	D	CG	339	D	1.8	160	1.3	2.3	1560	2360
U502 AWD	Police Int. Utility	6F55	3.7L TiVCT	9.7	160	CG	3.65	D	CG	365	D	1.8	160	1.3	2.3	1560	2360
U502 AWD	Explorer Trailer Tow	6F55	3.5L TiVCT	9.7	160	CG	3.65	D	CG	365	D	1.8	160	1.3	2.3	1560	2360
D472 AWD	Limo	6F55	3.7L TiVCT	9.7	160	CG	3.65	D	CG	365	D	1.8	160	1.3	2.3	1560	2360
D471AWD	FLEX	6F55	3.5 V6 (GTDI)	9.7	160	CG	3.16	D	CG	316	D	1.8	160	1.3	2.3	1560	2360
D472 AWD	MKT	6F55	3.5 V6 (GTDI)	9.7	160	CG	3.16	D	CG	316	D	1.8	160	1.3	2.3	1560	2360
CD391 FHEV	Fusion Hybrid	HF35	2.0L I4 (Atk.)	N/A	N/A	EJ	3.61	N/A	EJ	361		N/A	N/A	N/A	N/A	N/A	N/A
CD391 PHEV	Fusion Hybrid	HF35	2.0L I4 (Atk.)	N/A	N/A	EJ	4.09	N/A	EJ	409		N/A	N/A	N/A	N/A	N/A	N/A
CD533 FHEV	MKZ Hybrid	HF35	2.0L I4 (Atk.)	N/A	N/A	EJ	4.09	N/A	EJ	409		N/A	N/A	N/A	N/A	N/A	N/A
CD533 FHEV	MKZ Hybrid	HF35	2.0L I4 (Atk.)	N/A	N/A	EJ	3.61	N/A	EJ	361		N/A	N/A	N/A	N/A	N/A	N/A
C344 FHEV	C-Max Hybrid	HF35	2.0L I4 (Atk.)	N/A	N/A	EJ	3.21	N/A	EJ	321		N/A	N/A	N/A	N/A	N/A	N/A
C344 PHEV	C-Max Hybrid	HF35	2.0L I4 (Atk.)	N/A	N/A	EJ	4.09	N/A	EJ	409		N/A	N/A	N/A	N/A	N/A	N/A

2014 MY
Emission Certification
Transmission Identification Chart

Program	Vehicle Name	Transmission	Engine	Conv. Dia.	K-Factor	Program Code	CFDR	Torque Converter Designation	Part 1 Code	Nominal Torque Ratio	Nominal K	Stall Torque Ratio		Stall Speed RPM@Torque	
Rear Wheel Drive															
VN127	E-Series (U 8500)	4R75	4.6L 2V	12"	145 LO	B7		F	B7 F	2.334	142.3	1.8	2.8	1343	2143
VN127	E-Series (U 8500)	4R75	5.4L 2V	12"	110	B7		D	B7 D	2.009	112.9	1.5	2.5	983	1783
HCD339	Low Cab Forward	5R110W	4.5L Diesel	12"	110	BE		C	BE C	2.11	110.8	1.6	2.6	1497	2151
P473, VN127, F53, F59	F-SuperDuty, Econoline, Motorhome	5R110W	6.8L 2V & 3V	12"	95	TQ		A	TQ A	1.851	94.6	1.4	2.4	1698	2060
VN127	Econoline	5R110W	5.4L 2V	12"	110	TQ		C	TQ C	2.11	110.8	1.6	2.6	1497	2151
U222/U354	Expedition/	6R80	5.4L	11"	126	C3		C	C3 C	2	126	1.9	2.1	2083	2449
P415/U228	F150/Navigator	6R80	5.4L	11"	126	C3		C	C3 C	2	126	1.9	2.1	2083	2449
P415/S197	F150/Mustang	6R80	3.7	10 1/4"	155	C3		D	C3 D	1.78	154.9	1.68	1.88	2300	2580
P415/S197	F150/Mustang	6R80	5.0L	11"	125	C3		E	C3 E	2	126	1.9	2.1	2400	2700
P415	F150	6R80	3.5L	11"	142	C3		G	C3 G	2	142	1.9	2.1	2630	2900
P415	F150/Navigator	6R80	6.2L	11"	126	C3		C	C3 C	2	126	1.9	2.1	2300	2620
P473	Superduty	6R140	6.7L	12.6"	90K	CV		A	CV A	1.916	90	1.82	2.01	2300	2650
P473	Superduty	6R140	6.2L	12"	129K	CP		B	CP B	2.01	127.7	1.91	2.11	2150	2500
H561	Med Dty	6R140	6.8L	12"	129K	CQ		B	CQ B	2.01	127.7	1.91	2.11	2150	2500

2014 B299N 1.0L DPS6 AUTOMATIC POWER SHIFT TRANSMISSION SUMMARY

A/T Code	Class	No. of Forward Gears	Overdrive	Gear Ratios	Transmission Shift Schedule	Torque Converter Characteristics		
						Size (in.)	Stall Torque Ratio	Stall Speed RPM @ Torque (lb.ft.)
VL411N	Automatic	6	Yes (2)	4.1818:1	a/	NA	NA	NA
				2.4286:1				
				1.4359:1				
				0.9592:1				
				0.8043:1				
				0.6327:1				

a/ The transmission shift schedules are contained within the Transmission Control Module (TCM). The TCM is located on the transmission.

General Description: The DPS6 is an power shift transmission, fully automatic manual 6-speed overdrive transmission with input through a cardanic dual clutch. The clutch incorporates a duel internal friction clutch that transmits engine torque mechanically when applied. The basic shift points and clutch application are a function of pedal position and vehicle speed, which may be modified for hilly terrain or trailer tow loads. Each powertrain calibration contains the individual shift points for the corresponding transmission application.

Special Features: The Cardanic clutch includes unique hardware that enables the TCM to electronically control clutch application and release. The powertrain calibration determines the operation of this feature. A mechanical malfunction lamp gives visual indication when a transaxle Diagnostic Trouble Code(s) has been stored.

Cardanic Clutch Operation: The application of the Cardanic clutch is scheduled electronically according to a specific powertrain calibration. The apply conditions are contingent upon the following:

- Vehicle speed.
- Pedal position.
- Transmission has warmed up sufficiently.
- Transmission range selector lever is in drive or low range.

2014 B299N 1.6L DPS6 AUTOMATIC POWER SHIFT TRANSMISSION SUMMARY

A/T Code	Class	No. of Forward Gears	Overdrive	Gear Ratios	Transmission Shift Schedule	Torque Converter Characteristics		
						Size (in.)	Stall Torque Ratio	Stall Speed RPM @ Torque (lb.ft.)
CQ390N	Automatic	6	Yes (2)	3.917:1	a/	NA	NA	NA
				2.429:1				
				1.436:1				
				1.021:1				
				0.867:1				
				0.702:1				

a/ The transmission shift schedules are contained within the Transmission Control Module (TCM). The TCM is located on the transmission.

General Description: The DPS6 is an power shift transmission, fully automatic manual 6-speed overdrive transmission with input through a cardanic dual clutch. The clutch incorporates a duel internal friction clutch that transmits engine torque mechanically when applied. The basic shift points and clutch application are a function of pedal position and vehicle speed, which may be modified for hilly terrain or trailer tow loads. Each powertrain calibration contains the individual shift points for the corresponding transmission application.

Special Features: The Cardanic clutch includes unique hardware that enables the TCM to electronically control clutch application and release. The powertrain calibration determines the operation of this feature. A mechanical malfunction lamp gives visual indication when a transaxle Diagnostic Trouble Code(s) has been stored.

Cardanic Clutch Operation: The application of the Cardanic clutch is scheduled electronically according to a specific powertrain calibration. The apply conditions are contingent upon the following:

- Vehicle speed.
- Pedal position.
- Transmission has warmed up sufficiently.
- Transmission range selector lever is in drive or low range.

2014 C346N 2.0L DPS6 AUTOMATIC POWER SHIFT TRANSMISSION SUMMARY

A/T Code	Class	No. of Forward Gears	Overdrive	Gear Ratios	Transmission Shift Schedule	Torque Converter Characteristics		
						Size (in.)	Stall Torque Ratio	Stall Speed RPM @ Torque (lb.ft.)
CW385N	Automatic	6	Yes (2)	3.917:1	a/	NA	NA	NA
				2.429:1				
				1.436:1				
				1.021:1				
				0.867:1				
				0.702:1				

a/ The transmission shift schedules are contained within the Transmission Control Module (TCM). The TCM is located on the transmission.

General Description: The DPS6 is a power shift transmission, fully automatic manual 6-speed overdrive transmission with input through a cardanic dual clutch. The clutch incorporates a duel internal friction clutch that transmits engine torque mechanically when applied. The basic shift points and clutch application are a function of pedal position and vehicle speed, which may be modified for hilly terrain or trailer tow loads. Each powertrain calibration contains the individual shift points for the corresponding transmission application.

Special Features: The Cardanic clutch includes unique hardware that enables the TCM to electronically control clutch application and release. The powertrain calibration determines the operation of this feature. A mechanical malfunction lamp gives visual indication when a transaxle Diagnostic Trouble Code(s) has been stored.

Cardanic Clutch Operation: The application of the Cardanic clutch is scheduled electronically according to a specific powertrain calibration. The apply conditions are contingent upon the following:

- Vehicle speed.
- Pedal position.
- Transmission has warmed up sufficiently.
- Transmission range selector lever is in drive or low range.

2014 C346N BEV TRANSMISSION SUMMARY

A/T Code	Class	No. of Forward Gears	Overdrive	Gear Ratios	Transmission Shift Schedule	Torque Converter Characteristics		
						Size (in.)	Stall Torque Ratio	Stall Speed RPM @ Torque (lb.ft.)
WA	Automatic	1	N/A	7.82:1	a/	NA	NA	NA

a/ The transmission shift schedules are contained within the Transmission Control Module (TCM). The TCM is located on the gearbox.

General Description: The BEV powertrain is a 1-speed gearbox powered by an electric machine. It is a 2 axis system with an electric machine, an intermediate shaft, and a differential. The differential and electric machine are on the same axis. As a typical automatic transmission system does, the system includes a TRS and a park system. The gearbox lubrication is achieved through splash (there is no pump) using Ford Type A fluid. There is also no cooling circuit for the transmission oil. Cooling for the electric machine is achieved by a water jacket mounted in the housing around where the electric machine stator is press fit (heat shrunk).

Special Features: This system is unique versus a traditional automatic transmission in that in addition to the gearbox, it includes its own powerplant in the electric machine. The electric machine is a 6 pole permanent magnet AC machine. It is controlled by the on board TCM, which includes an inverter module to convert high voltage DC from the battery to three-phase AC voltage for use by the electric machine.

ED_002078G_00001322-00817

2014 6R140 AUTOMATIC TRANSMISSION SUMMARY (Index Reference 12.03.01.00)

A/T Code	Class	No. of Forward Gears	Overdrive	Gear Ratios	Transmission Shift Schedule	Torque Converter Characteristics		
						Size (in.)	Stall Torque Ratio	Stall Speed RPM @ Torque (lb.ft.)
(Diesel w/ 90K)	Automatic	6	Yes	1st 3.974 2nd 2.318 3rd 1.516 4th 1.149 5th 0.858 6th 0.674 Rev -3.128	a/	12.6	1.82 - 2.01	2250 – 2650 rpm @ 770 ft-lb
(Gas w/ 129K)	Automatic	6	Yes	1st 3.974 2nd 2.318 3rd 1.516 4th 1.149 5th 0.858 6th 0.674 Rev -3.128	a/	12	1.91 - 2.11	2200 – 2600 rpm @ 350 ft-lb

a/ The transmission shift schedule is contained within the Powertrain Control Module (PCM) for gas engine vehicles and the Transmission Control Module (TCM) for diesel engine vehicles.

General Description: The 6R140 is an electronically controlled, fully automatic 6 speed overdrive transmission with input through a two phase, single stage torque converter. The torque converter incorporates an internal friction clutch which transmits engine torque mechanically when applied. The shift points and converter clutch application are a function of throttle position and vehicle speed. Each powertrain calibration contains the individual shift points for the corresponding transmission application.

Special Features: The torque converter includes unique hardware which enables the PCM to electronically control clutch apply and release. The powertrain calibration determines the operation of this feature. The Tow/Haul Mode (THM) Switch is an On/Off switch located on the end of the transmission range selector lever or on the dash, depending on vehicle application. It allows the operator to select a mode that changes the transmission operation for use when driving with a heavy load, trailer towing or when additional engine braking is required. The switch and control logic are designed so that the vehicle always powers up with the THM feature disabled. A Tow/Haul Mode Indicator Lamp gives visual indication when the THM feature is selected.

Torque Converter Operation: The application of the converter clutch is scheduled electronically according to a specific powertrain calibration and may lockup in all six (6) forward gears. The apply conditions are contingent upon the following:

- Throttle position.
- Transmission has warmed up sufficiently.
- Transmission range selector lever is not in reverse.

2014 6F35 AUTOMATIC TRANSAXLE SUMMARY (Index Reference 12.03.01.00)

A/T Code	Class	No. of Forward Gears	Overdrive	Gear Ratios	Transaxle Shift Schedule	Torque Converter Characteristics		
						Size (in.)	Stall Torque Ratio	Stall Speed RPM @ Torque (lb.ft.)
W6351A	Automatic	6	Yes	1st 4.584	a/	10.93	1.85 - 2.05	2499 - 2719 @ 150
W6321A	"	"	"	2nd 2.964	a/	10.93	1.85 - 2.05	2499 - 2719 @ 150
W6307A	"	"	"	3rd 1.912	a/	10.93	1.85 - 2.05	2499 - 2719 @ 150
W6336B	"	"	"	4th 1.446	a/	11.03	1.9 - 2.1	2768 –2989 @ 150
W6321B	"	"	"	5th 1.000	a/	11.03	1.9 - 2.1	2768 –2989 @ 150
W6351B	"	"	"	6th 0.746	a/	11.03	1.9 - 2.1	2768 –2989 @ 150
W6307B	"	"	"	Rev -2.943	a/	11.03	1.9 - 2.1	2768 –2989 @ 150
W6321C	"	"	"		a/	10.5	1.73 - 1.93	2523 – 2793 @ 150
W6351C	"	"	"		a/	10.5	1.73 - 1.93	2523 – 2793 @ 150
W6321D	"	"	"		a/	11.03	1.84 - 2.03	2573 –2793 @ 150
W6336D	"	"	"		a/	11.03	1.84 - 2.03	2573 –2793 @ 150
W6307E	"	"	"		a/	10.51	2.18 - 2.42	3078 – 3407 @ 150
W6321E	"	"	"		a/	10.51	2.18 - 2.42	3078 – 3407 @ 150
W6351E	"	"	"		a/	10.51	2.18 - 2.42	3078 – 3407 @ 150
W6351F	"	"	"		a/	11.02	1.8 – 2.0	2683 – 2977 @ 150
					a/			

a/ The transaxle shift schedule is contained within the Powertrain Control Module (PCM).

General Description: The 6F35 is an electronically controlled, fully automatic 6 speed overdrive transaxle with input through a two phase, single stage torque converter. The torque converter incorporates an internal friction clutch which transmits engine torque mechanically when applied. The shift points and converter clutch application are a function of throttle position and vehicle speed. Each powertrain calibration contains the individual shift points for the corresponding transaxle application.

Special Features: The PCM electronically controls The Torque Converter Clutch apply and release. The powertrain calibration determines the operation of this feature. An O/D cancel feature is standard with grade assist. New TSC (transmission system characterization) process requires VO to flash vehicle PCM with a unique TRID data provided by the transmission assembly plant. A Multi-function Warning Lamp gives visual indication when a Transaxle Diagnostic Trouble Code(s) has been stored. The "wrench" light located in the lower left of IP is for continuous codes set during the present power-up and the MIL light "engine shape" is centered in the IP.

Torque Converter Operation: The application of the converter clutch is scheduled electronically according to the powertrain calibration. The apply conditions are contingent upon the following:

- Throttle position is above a closed throttle breakpoint.
- Throttle position is not changing rapidly.
- Brakes are not applied.
- Transaxle has warmed up sufficiently.
- Transaxle range selector lever is not in reverse or manual low.
- Transaxle is not operating in first, second and third gears.

2014 6F50/55 AUTOMATIC TRANSAXLE SUMMARY (Index Reference 12.03.01.00)

A/T Code	Class	No. of Forward Gears	Overdrive	Gear Ratios	Transaxle Shift Schedule	Torque Converter Characteristics		
						Size (in.)	Stall Torque Ratio	Stall Speed RPM @ Torque (lb.ft.)
WJ277D	Automatic	6	Yes	1st 4.484	a/	9.7	1.3 - 2.3	1560 -2360 @ 150
WJ316D	"	"	"	2nd 2.872	a/	9.7	1.3 - 2.3	1560 -2360 @ 150
WJ339D	"	"	"	3rd 1.842	a/	9.7	1.3 - 2.3	1560 -2360 @ 150
WJ365D	"	"	"	4th 1.414	a/	9.7	1.3 - 2.3	1560 -2360 @150
CG277D	"	"	"	5th 1.000	a/	9.7	1.3 - 2.3	1560 -2360 @150
CG316D	"	"	"	6th 0.742	a/	9.7	1.3 - 2.3	1560 -2360 @150
CG339D	"	"	"	Rev -2.882	a/	9.7	1.3 - 2.3	1560 -2360 @150
CD365D	"	"	"		a/	9.7	1.3 - 2.3	1560 -2360 @150

a/ The transaxle shift schedule is contained within the Powertrain Control Module (PCM).

Updated: 5/16/2012

General Description: The 6F50/55 is an electronically controlled, fully automatic 6 speed overdrive transaxle with input through a two phase, single stage torque converter. The torque converter incorporates an internal friction clutch which transmits engine torque mechanically when applied. The shift points and converter clutch application are a function of throttle position and vehicle speed. Each powertrain calibration contains the individual shift points for the corresponding transaxle application.

Special Features: The PCM electronically controls The Torque Converter Clutch apply and release. The powertrain calibration determines the operation of this feature. Vehicles with SelectShift (SST) permit manual operation of the transmission. For vehicles without SST, a Transaxle Control Switch (TCS) allows the operator to disable and re-enable 6th gear operation. The switch and control logic are designed so that the vehicle always powers up with 6th gear enabled. An O/D OFF Lamp gives visual indication when O/D is disabled (ie, cancelled). A Multi-function Warning Lamp gives visual indication when a Transaxle Diagnostic Trouble Code(s) has been stored. Both lamps are located on the instrument cluster.

Torque Converter Operation: The application of the converter clutch is scheduled electronically according to the powertrain calibration. The apply conditions are contingent upon the following:

- Throttle position is above a closed throttle breakpoint.
- Throttle position is not changing rapidly.
- Brakes are not applied.
- Transaxle has warmed up sufficiently.
- Transaxle range selector lever is not in reverse or manual low.
- Transaxle is not operating in first or second gears.

ED_002078G_00001322-00821

2014 HF35 HYBRID AUTOMATIC TRANSMISSION SUMMARY

A/T Code	Class	No. of Forward Gears	Overdrive	Gear Ratios	Transmission Shift Schedule	Torque Converter Characteristics		
						Size (in.)	Stall Torque Ratio	Stall Speed RPM @ Torque (lb.ft.)
EJ4091	eCVT	Infinite	Yes	N/A	a/	N/A	N/A	N/A
EJ3611	eCVT	Infinite	Yes	N/A	a/	N/A	N/A	N/A
EJ3211	eCVT	Infinite	Yes	N/A	a/	N/A	N/A	N/A

a/ The eCVT does not explicitly command specific gear ratios. It uses torque based control (motor control schedule) which is contained within the Hybrid Powertrain Control Module (HPCM).

b/ The eCVT does not use a torque converter.

General Description: The HF35 is an electronically controlled hybrid Powersplit transaxle containing two high voltage electric machines. The first electric machine (Generator) controls the engine speed and torque levels through a planetary gear set. The second electric machine (Traction Motor) puts torque to the wheels through a fixed gear ratio.

Special Features: The Traction Motor also provides Brake Regeneration Power recovery. New TSC (transmission system characterization) process requires VO to flash vehicle HPCM with a unique TRID data provided by the transmission assembly plant (known as Resolver Offset). Some models also are equipped with an external electric pump for Plug-In Hybrid Electric Vehicle (PHEV) applications. This pump operates only when in pure electric drive mode (engine off) and is speed controlled through the HPCM.

2014 4R70W/4R75E AUTOMATIC TRANSMISSION SUMMARY (Index Reference 12.03.01.00)

A/T Code	Class	No. of Forward Gears	Overdrive	Gear Ratios	Transmission Shift Schedule	Torque Converter Characteristics		
						Size (in.)	Stall Torque Ratio	Stall Speed RPM @ Torque (lb.ft.)
B7D	Automatic	4	Yes	2.84:1	a/	12	1.5 - 2.5	983 – 1783 @150
B7F	"	"	"	1.55:1	a/	12	1.8 – 2.8	1343 – 2143 @150
				1.00:1				
				0.70:1				

a/ The transmission shift schedule is contained within the Powertrain Control Module (PCM).

General Description: The 4R70W and 4R75E are electronically controlled; fully automatic 4 speed overdrive transmissions with input through a two phase, single stage torque converter. The torque converter incorporates an internal friction clutch which transmits engine torque mechanically when applied. The shift points and converter clutch application are a function of throttle position and vehicle speed. Each powertrain calibration contains the individual shift points for the corresponding transmission application.

Special Features: The torque converter includes unique hardware which enables the PCM to electronically control clutch apply and release. The powertrain calibration determines the operation of this feature. A Transmission Control Switch (TCS) is located on (or near) the transmission range selector lever and allows the operator to disable and re-enable 4th gear operation. The switch and control logic are designed so that the vehicle always powers up with 4th gear enabled. A Transmission Control Indicator Lamp (TCIL) gives visual indication of "O/D OFF"; and upon flashing, indicates when a Transmission Diagnostic Trouble Code(s) has been stored.

Torque Converter Operation: The application of the converter clutch is scheduled electronically according to the powertrain calibration in 2nd, 3rd, or 4th gear. The apply conditions are contingent upon the following:

- Throttle position is above a closed throttle breakpoint.
- Throttle position is not changing rapidly.
- Brakes are not applied.
- Transmission has warmed up sufficiently.
- Transmission range selector lever is not in reverse or manual low.
- Transmission is not operating in first gear.

2014 5R110W AUTOMATIC TRANSMISSION SUMMARY (Index Reference 12.03.01.00)

A/T Code	Class	No. of Forward Gears	Overdrive	Gear Ratios	Transmission Shift Schedule	Torque Converter Characteristics		
						Size (in.)	Stall Torque Ratio	Stall Speed RPM @ Torque (lb.ft.)
BEC (Diesel w/ 110K)	Automatic	5	Yes	3.114:1	a/	12	1.61 – 2.61	1497 – 2151 rpm @ 200 ft-lb
TQA (Gas w/ 95K)				2.202:1		12	1.36 – 2.36	1698 – 2060 rpm @ 200 ft-lb
TQC (Gas w/ 110K)				1.545:1		12	1.61 – 2.61	1497 – 2151 rpm @ 200 ft-lb
				1.00:1				
				0.707:1				

a/ The transmission shift schedule is contained within the Powertrain Control Module (PCM) for gas engine vehicles and the Transmission Control Module (TCM) for diesel engine vehicles.

General Description: The 5R110W is an electronically controlled, fully automatic 5 speed overdrive transmission with input through a two phase, single stage torque converter. The torque converter incorporates an internal friction clutch which transmits engine torque mechanically when applied. The shift points and converter clutch application are a function of throttle position and vehicle speed. Each powertrain calibration contains the individual shift points for the corresponding transmission application.

Special Features: The torque converter includes unique hardware which enables the PCM to electronically control clutch apply and release. The powertrain calibration determines the operation of this feature. The Tow/Haul Mode (THM) Switch is an On/Off switch located on the end of the transmission range selector lever or on the dash, depending on vehicle application. It allows the operator to select a mode that changes the transmission operation for use when driving with a heavy load, trailer towing or when additional engine braking is required. The switch and control logic are designed so that the vehicle always powers up with the THM feature disabled (except on U-Haul Chassis/Cutaway fleet vehicles). A Tow/Haul Mode Indicator Lamp gives visual indication when the THM feature is selected; and upon flashing, indicates when Transmission Diagnostic Trouble Code(s) have been stored.

Torque Converter Operation: The application of the converter clutch is scheduled electronically according to a specific powertrain calibration and may lockup in all five (5) forward gears. The apply conditions are contingent upon the following:

- Throttle position is above a closed throttle breakpoint.
- Throttle position is not changing rapidly.
- Transmission has warmed up sufficiently.
- Transmission range selector lever is not in reverse or manual low.

2014 6R80 AUTOMATIC TRANSMISSION SUMMARY (Index Reference 12.03.01.00)

A/T Code	Class	No. of Forward Gears	Overdrive	Gear Ratios	Trans Shift Schedule	Torque Converter Characteristics		
						Size (in.)	Stall Torque Ratio	Stall Speed RPM @ Torque (lb.ft.)
C3A	Automatic	6	Yes	4.171:1	a/	10 ¼	1.68/1.88	2358/2762
				2.340:1				
				1.521:1				
				1.143:1 0.867:1 0.691:1				
C3C	'	"	"		"	11	1.9/2.1	2083/2449
C3D	"	"	"		"	10 ¼		2300/2580
C3E	"	"	"		"	11"	1.9/2.1	2400/2700
C3F	"	"	"		"	10 ¼"	1.68/1.88	3070/3315
C3G	"	"	"		"	11	1.9/2.1	2630/2900

a/ The trans shift schedule is contained within the Transmission Control Module (TCM).

General Description: The 6R60/80 is an electronically controlled, fully automatic 6 speed overdrive trans with input through a two phase, single stage torque converter. The torque converter incorporates an internal friction clutch which transmits engine torque mechanically when applied. The shift points and converter clutch application are a function of throttle position and vehicle speed. Each powertrain calibration contains the individual shift points for the corresponding trans application.

Special Features: The torque converter includes unique hardware which enables the TCM to electronically control clutch apply and release. The powertrain calibration determines the operation of this feature. A Transaxle Control Switch (TCS) is located on the transmission range selector lever and allows the operator to disable and re-enable 6th gear operation. The switch and control logic are designed so that the vehicle always powers up with 6th gear enabled. An O/D OFF Lamp gives visual indication when O/D is disabled (ie, cancelled). A Multi-function Warning Lamp gives visual indication when a Transaxle Diagnostic Trouble Code(s) has been stored.

Torque Converter Operation: The application of the converter clutch is scheduled electronically according to the powertrain calibration in 4th, 5th and 6th gears. The apply conditions are contingent upon the following:

- Throttle position is above a closed throttle breakpoint.
- Throttle position is not changing rapidly.
- Brakes are not applied.
- Trans has warmed up sufficiently.
- Trans range selector lever is not in reverse or manual low.
- Trans is not operating in first

2014 6R140 AUTOMATIC TRANSMISSION SUMMARY (Index Reference 12.03.01.00)

A/T Code	Class	No. of Forward Gears	Overdrive	Gear Ratios	Transmission Shift Schedule	Torque Converter Characteristics		
						Size (in.)	Stall Torque Ratio	Stall Speed RPM @ Torque (lb.ft.)
(Diesel w/ 90K)	Automatic	6	Yes	1st 3.974 2nd 2.318 3rd 1.516 4th 1.149 5th 0.858 6th 0.674 Rev -3.128	a/	12.6	1.82 - 2.01	2250 – 2650 rpm @ 770 ft-lb
(Gas w/ 129K)				1st 3.974 2nd 2.318 3rd 1.516 4th 1.149 5th 0.858 6th 0.674 Rev -3.128		12	1.88 - 2.08	2200 – 2600 rpm @ 350 ft-lb

a/ The transmission shift schedule is contained within the Powertrain Control Module (PCM) for gas engine vehicles and the Transmission Control Module (TCM) for diesel engine vehicles.

General Description: The 6R140 is an electronically controlled, fully automatic 6 speed overdrive transmission with input through a two phase, single stage torque converter. The torque converter incorporates an internal friction clutch which transmits engine torque mechanically when applied. The shift points and converter clutch application are a function of throttle position and vehicle speed. Each powertrain calibration contains the individual shift points for the corresponding transmission application.

Special Features: The torque converter includes unique hardware which enables the PCM to electronically control clutch apply and release. The powertrain calibration determines the operation of this feature. The Tow/Haul Mode (THM) Switch is an On/Off switch located on the end of the transmission range selector lever or on the dash, depending on vehicle application. It allows the operator to select a mode that changes the transmission operation for use when driving with a heavy load, trailer towing or when additional engine braking is required. The switch and control logic are designed so that the vehicle always powers up with the THM feature disabled. A Tow/Haul Mode Indicator Lamp gives visual indication when the THM feature is selected.

Torque Converter Operation: The application of the converter clutch is scheduled electronically according to a specific powertrain calibration and may lockup in all six (6) forward gears. The apply conditions are contingent upon the following:

- Throttle position.
- Transmission has warmed up sufficiently.
- Transmission range selector lever is not in reverse.

2014 MY NA MANUAL TRANSMISSION SUMMARY								
Part 1 Code	Model	No. of Forward Gears	Overdrive	Transaxle Final Drive Ratio	Gear Ratios	Fluid Type	Factory Fill	Application(s)
VT323N	MMT6	6	Yes	4.06	3.231 / 1.952 / 1.321 / 1.129 / 1.029 / 0.943 / 4.598 (reverse)	WSD-M2C200-D	1.75L	Focus ST
RP367N	MTX75	5	Yes	3.82	3.67 / 2.136 / 1.448 / 1.028 / 0.805 3.727 (reverse)	WSD-M2C200-D	1.9L	Focus (non-ST)
AX424N	MT82	6	Yes	N/A	4.24 / 2.54 / 1.66 / 1.24 / 1.00 / 0.70 3.84 (reverse)	WSD-M2C200-FM	2.6L	3.7L V6 Mustang S197
AX366N	MT82	6	Yes	N/A	3.66 / 2.43 / 1.69 / 1.31 / 1.00 / 0.65 3.32 (reverse)	WSD-M2C200-FM	2.6L	5.0L V8 Mustang S197
RN385N	IB5	5	Yes	4.07	3.85 / 2.04 / 1.28 / 0.95 / 0.76 3.61 (reverse)	WSD-M2C200-C	2.1L	Fiesta
BT373NA	B6	6	Yes	3.824	3.727 /2.048 / 1.357/ 1.032 / 0.821 / 0.690 / 3.824 (reverse)	WSD-M2C200-D	1.54L	Fiesta ST
BT373N	B6	6	Yes	4.067	3.727 / 2.048 / 1.357 / 1.032 / 0.821 / 0.690 / 3.818 (reverse)	WSD-M2C200-D	1.9L	1.6L Fusion
VE297N	TREMEC TR6060	6	Yes	N/A	2.97 /1.78 /1.3 /1.0 /0.80 /0.63 2.9 (reverse)	Dextron III Texaco Formulation 1863	3.46L	Shelby GT 500

* Service fill 90 oz Texaco Formulation 1863 or equivalent (Motorcraft MerconV ATF).

ED_002078G_00001322-00828

2014 MY TRUCK SHIFT SCHEDULES

SHIFT SURVEY	VEHICLE	DRIVE CYCLE					Acceleration					Cruise				
T-NUMBER	DESCRIPTION	C/H	HWY	SC03	US06	COMMENTS	1 - 2	2 - 3	3 - 4	4 - 5	5 - 6	1 - 2	2 - 3	3 - 4	4 - 5	5 - 6
Z	15, 25, 40, 45	CM666	CH665	CS044	CU221		15	25	40	45		15	25	40	45	
Z	15, 25, 40, 45, 50 GENERIC 6-Speed	CM665	CH664	CS043	CU220		15	25	40	45	50	15	25	40	45	50
Z	15, 25, 40, 45 - GENERIC Hvy. Dty 6-Speed	CM500	CH501	N / R	N / R	Omits L-1 Shift Point	15	25	40	45	50	15	25	40	45	50

2014MY CAR SHIFT SCHEDULES

SHIFT SURVEY T-NUMBER	2014 MY VEHICLE SHIFT SCHEDULE DESCRIPTION	DRIVE CYCLE C/H	HWY	SC03	US06	CalUnif	COMMENTS	Acceleration 1 - 2	2 - 3	3 - 4	4 - 5	5 - 6	Cruise 1 - 2	2 - 3	3 - 4	4 - 5	5 - 6
Z	15, 25, 40, 45 - GENERIC 5-Speed	CM666	CH665	CS044	CU221			15	25	40	45	-	15	25	40	45	-
Z	15, 25, 40, 45, 50 GENERIC 6-Speed	CM665	CH664	CS043	CU220			15	25	40	45	50	15	25	40	45	50
Z (us06 mod)	1.0L GTDI Fiesta	CM666	CH665	CS044	CU234			15	25	40	45	-	15	25	40	45	-
T - 171	1.6L Fiesta w/SIL	CM662	CH316	CS013	CU221		verify/CDX: 662,316,221	14	24	32	44	-	11	20	28	37	-
T - 171	2.0L Focus GDI w/SIL	CM662	CH316	CS013	CU221	CM673		14	24	32	44	-	11	20	28	37	-
	2.0L GTDI Focus ST	CM686	DH658	DE646	CU231			12	23	32	41	42	9	16	24	34	41
	1.6L GTDI Fiesta ST	CM686	DH658	DE646	CU231			12	23	32	41	42	9	16	24	34	41
Z (hwy/uso6 mod)	1.6L GTDI Escape SST	CM665	CH677	CS043	CU229		SST	15	25	40	45	50	15	25	40	45	50
Z (us06 mod)	1.6L GTDI Fusion Manual	CM665	CH664	CS043	CU232			15	25	40	45	50	15	25	40	45	50
Z (us06 mod)	1.6L GTDI Fusion **SST**	CM665	CH664	CS043	CU232		SST	15	25	40	45	50	15	25	40	45	50
Z	2.0L GTDI Fusion\MKz\Escape **SST**	CM665	CH664	CS043	CU220		SST	15	25	40	45	50	15	25	40	45	50
Z	2.5L Fusion\Escape with **SST**	CM665	CH664	CS043	CU220		SST	15	25	40	45	50	15	25	40	45	50
Z	3.5/3.7L Taurus\MKS\MKZ\Flex\MKt\Edge\MKx **SST**	CM665	CH664	CS043	CU220		SST	15	25	40	45	50	15	25	40	45	50
Z (lug mods)	3.7 Mustang w/ 2.73 A.R. Manual	CM667	CH666	CS045	CU024			15	25	40	45	50	15	25	40	45	50
T-167	3.7 Mustang w/ 3.31 A.R. Manual	CM668	CH667	CS046	CU222			13	26	37	43	59	8	17	28	40	55
	5.0L Mustang (skip shift feature gone for 2013/14)	CM681	CH676	DS022	CU227	DM665	No Skip-Shift for '13 & '14	13	24	31	39	43	6	17	25	34	41
	5.8L Mustang Shelby GT500	CM684	CH675	DS022	CU228			11	18	25	30	43	6	12	22	28	39

ETHANOL FFV CERTIFICATION VEHICLE "SIMPLIFIED" C-PREP PROCEDURE

SPECIAL PREP CYCLE TO ADAPT A VEHICLE TO A NEW FUEL TYPE (WITH DIFFERENT ETHANOL CONTENT) PRIOR TO THE NEXT TEST PROCEDURE

START	FINISH	
		1. DRAIN FUEL TANK TO EMPTY. (KEY MUST BE OFF)
		2. START THE ENGINE AND IDLE FOR 1 MINUTE. TURN KEY OFF.
		3. ADD 40% FILL OF THE SPECIFIED TEST FUEL (40% = _____ GAL.) (FUEL CODE _____) (KEY MUST BE OFF)
		4. CONDUCT EPA74 DYNO PREP CYCLE.

In addition to the "Simplified" C-Prep steps shown above, the following modification will be made to all FFV emissions test procedures:

- The initial drain and 40% fill will be included for all emissions tests (even in cases where the regulations allow for waiver of the initial drain and fill). This requirement is being added to allow the official FTP to represent a typical start-up condition where alcohol learning has completed following a refueling event.

ORVR Test Procedure for Ethanol Fuel-Flexible Vehicles (FFV)

Ford Motor Company (Ford) follows the ORVR (On-Board Refueling Vapor Recovery) refueling emissions test procedure, as depicted by Figure B98-12 below, from the federal regulations (sections 86.152-86.154). The ORVR test procedure for fuel flexible vehicles is to fill to 40% with E85 and perform a preconditioning drive, fill to 40% with E85 and perform a Federal Test Procedure (FTP), fill to 10% with E85, and then refuel with E0. Ford has selected E85 and E0 because they are believed to represent the two commonly used commercial fuels for FFVs and therefore represent in-use ORVR refueling practices. It is believed that the E85 and E0 blend that occurs during the refueling portion of the test is the blend expected to result with the highest emission vapors for the ORVR test.

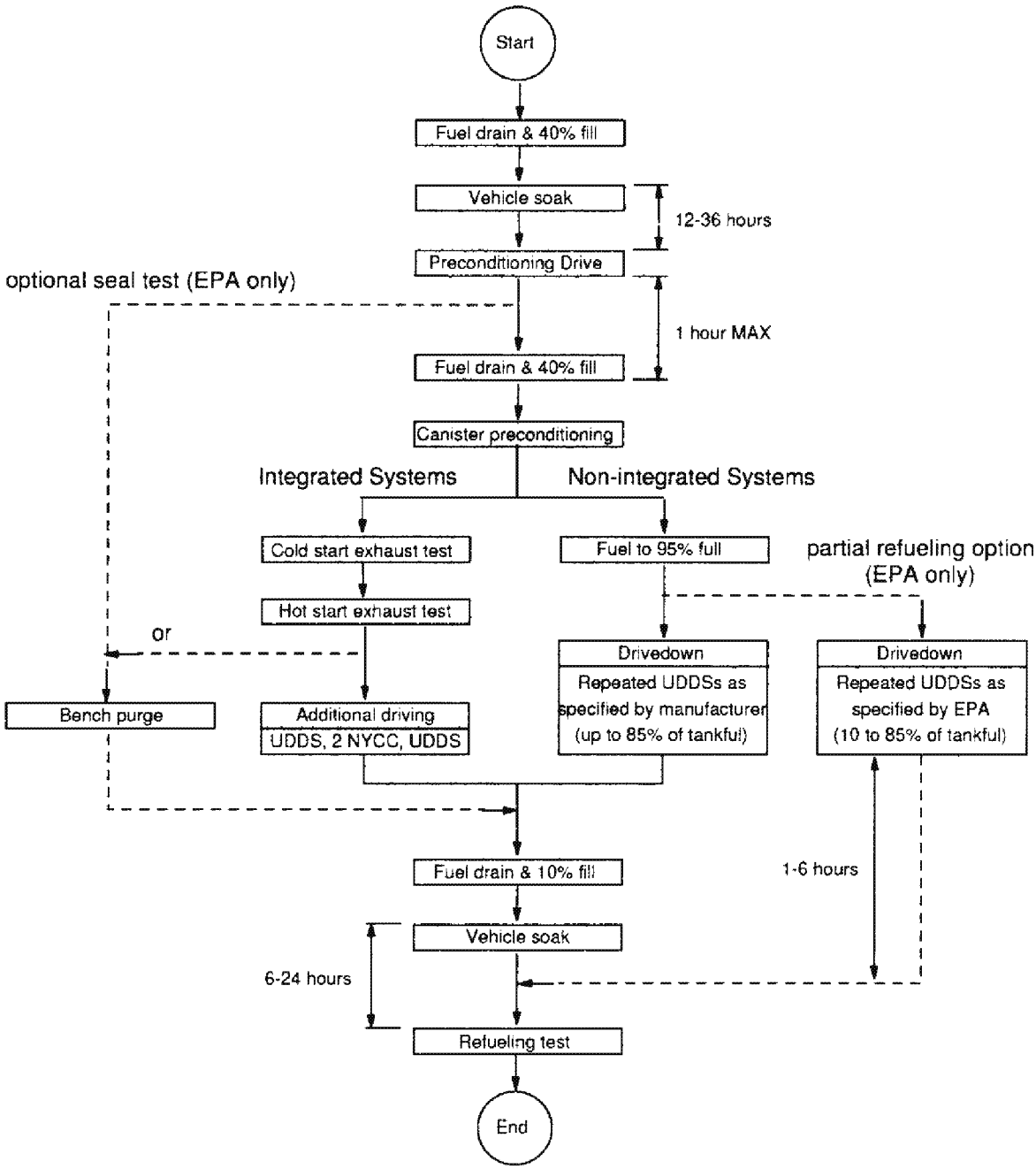

Figure B98-12: Refueling Test Sequence

12.04.02.04 – **Alternate Canister Load**

• Please refer to the letter with subject "Alternate Canister Preconditioning" from Dave Kulp (Ford Motor Company) to Eldert Bontekoe (EPA) dated February 22, 2001 and Reviewed and Accepted on February 28, 2001.

12.04.02.05 – **SHED Calibration**

• Please refer to the letter with subject "Approval to Use CARB – Specified Evaporative Emission Calibration Procedures" from Dave Kulp (Ford Motor Company) to Marty Reineman (EPA) dated December 19, 2002.

12.04.02.06 – **Road-speed modulated fan for US06 testing**

• On July 20, 2012, Ford received blanket approval to use the Road Speed Fan during US06 testing for our GTDI products, ranging from 1.0L to 3.5L. This fan provides air flow that better represents on-road cooling conditions experienced by our GTDI products. For reference, this approval is consistent with LEVIII, which will allow use of a road speed fan all chassis certified vehicles during the US06 test.

SPECIAL PCM REFLASH PRECONDITIONING PROCEDURES

The Profile Learning Cycle (PLC) procedure is conducted to ensure mature and stable Keep Alive Memory (KAM) information that allows the emissions control systems to respond as they would under normal operation. Two key components of KAM which are necessary to produce representative emissions and fuel economy results are the crankshaft profile and adaptive fuel corrections. The crankshaft profile must be learned and stored to enable the OBD-II misfire monitor. Until it is learned the vehicle may exhibit more frequent fuel shut-off events on decelerations. The adaptive fuel corrections are necessary for proper air-fuel control.

In many cases, reflash or PCM changes are required after the initial 4K mileage has been conducted. In that instance, and additionally after a loss of power to the PCM (e.g. battery disconnect for maintenance, battery drain, etc.), additional preconditioning to relearn the KAM must be conducted in order for the vehicle to be tested in a representative state.

This preconditioning cycle, known as the Profile Learning Cycle (PLC) consists of the following elements:

- Warm-up (4 min 60 mph steady speed drive or 5 minute idle)
- Three in-gear coastdowns from 60 – 40 mph with no brake actuation
- US06 drive cycle* (no sampling)
- EPA 74 drive cycle (no sampling)

The warm-up drive or idle plus in-gear coastdowns are used to set the misfire monitor. The US06 and EPA 74 drive cycles are conducted to learn the fuel tables at the speed/load points where the vehicle will be tested. Additionally, the EPA 74 can serve as the prep cycle for the subsequent test. This method establishes a procedure to set the misfire monitor in the same manner as would be done during normal customer driving.

The PLC is to be used after any recalibration, PCM replacement, or loss of power to the PCM. This procedure may also be used to condition test vehicles that have not been operated for extended periods of time. This preconditioning will ensure the vehicle is in a representative state for further testing.

** Note: for non-SFTP vehicles, this is replaced with an additional EPA 74 drive cycle with no sampling.*

Beginning with some 2011 MY products and all products for 2013 MY, new misfire technology eliminates the need for in-gear coastdowns to learn the misfire profile correction. For these vehicles, a new preconditioning cycle was devised. This new preconditioning cycle, known as the Alternate Learning Cycle (ALC) consists of the following elements, all without emissions sampling:

- Two HWFET drive cycles
- One US06 drive cycle*
- One EPA 74 drive cycle

TestNet "Prep of choice"	<----------	Sequence and Fan			---------->
ALC_U8500	2 X Hwy Fan speed 5,300 CFM	+	1 X US06* Fan speed 15,000 CFM	+	1 X EPA74 Fan speed 5,300 CFM

** Note: for non-SFTP vehicles, this is replaced with an additional EPA 74 drive cycle with no sampling with a prep named ALC_O8500*

Additional Mileage Accumulation/Maintenance to Ensure Representativeness of EDVs
(For EDVs with extended periods of vehicle inactivity)

Under normal circumstances, certification vehicles undergoing testing are not expected to be inactive for long periods of time. Such vehicles are representative of real world, in-use conditions, so no additional mileage accumulation, beyond that conducted for initial vehicle break-in, is needed to ensure vehicle emissions stability and in-use representativeness.

However there are occasions when vehicles are not actively tested for extended periods of time (weeks/months), for instance, when waiting for new calibrations or component updates, or when being reconfigured to represent a new model year vehicle. During periods of extended inactivity vehicles are typically parked outside in a parking structure or an impound lot. The inactivity period, coupled with draws on batteries of these vehicles by frequent use of key fobs in the parking lot, may cause battery voltages to drop too low to maintain Keep-Alive Memory (KAM) and PCM functionality. In addition, with uncontrollable weather conditions, brake, tires, and other component functions could be compromised. For the above reasons, it is difficult to ensure these vehicles are in a condition representative of in-use, and/or whether KAM on these vehicles has been maintained. For such vehicles, additional mileage accumulation and/or maintenance may be required to address the unique situations which occur during the certification process, but are not common in-use.

Additional mileage accumulation and maintenance are allowed and justified in the CFR 40 Part 86.1830-01 "Acceptance of vehicle for emissions testing", and CFR 40 Part 86.1831-01 "Mileage accumulation requirement for test vehicle":

- 86.1830-01 (c) (1), "All EVD's shall have at least the minimum number of miles accumulated to achieve stabilized emissions results..."
- 86.1830-01 (c) (2), "...manufacturer may alter any emission data vehicle... in lieu of building a new test vehicle providing that the modification will not impact the representativeness of vehicle's test results. Manufacturer shall use good engineering judgment in making such determinations."
- 86.1830-01 (c) (3), "Components used to reconfigure EDV's under the provisions of paragraph (c)(2) of this section shall be appropriately aged if necessary to achieve representative emission results. Manufacturer shall determine the need for component aging and the type and amount of aging required using good engineering judgment."
- 86.1831-01 (b) (2), "The manufacturer may use an alternative mileage accumulation method providing the form and extent of the service accumulation represents normal driving patterns for that vehicle, the method is consistent with good engineering judgment and the method is described in the application for certification."

Typical additional mileage accumulation and maintenance actions are described in the flow chart (attachment). For vehicles that are parked for weeks, the battery's state of charge is checked using a battery tester e.g. Micro 490 Digital Battery Analyzer, recommended by Ford in its Service Manual used by the dealerships. The battery shall be replaced or charged as needed to ensure adequate/representative state of charge. The brakes are also checked and maintained to ensure safety and representative function. For vehicles inactive longer than 6 months, additional maintenance such as filter and oil change is performed as prescribed via Ford Service Manuals. As documented in the flow-chart, these actions will be followed by the completion of a vehicle drive cycle called Profile Learning Cycle (PLC) to ensure the KAM is relearned and other component functions are stabilized to a condition representative of in-use. The PLC is also described in the Ford's Common Section of the Application 12.04.02.08.

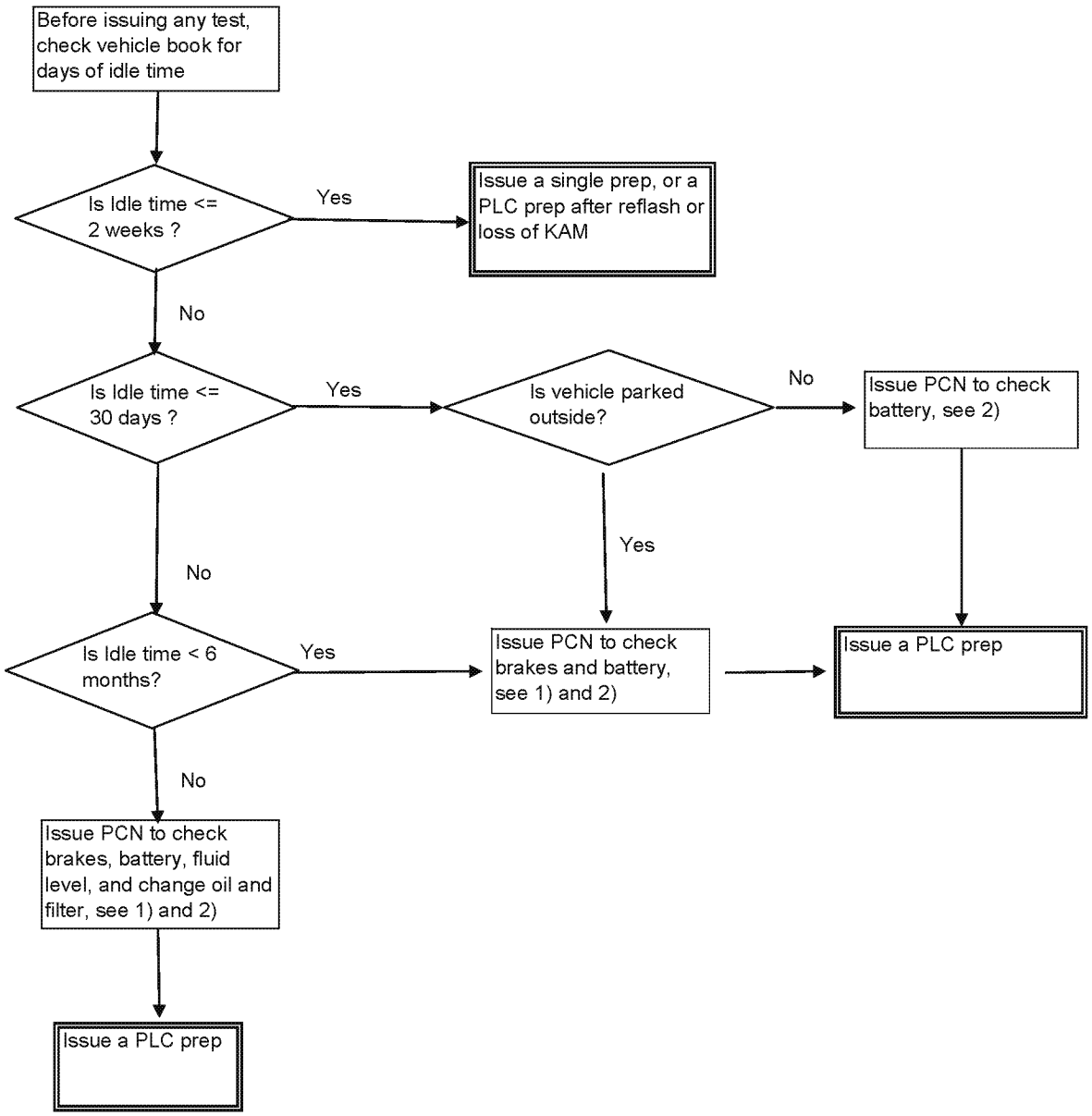

Note:
1) Brakes - repair/ replace as required
2) Battery - Use battery tester such as Micro 490 Digital Battery Analyzer to check battery SOC. Charge as needed

ED_002078G_00001322-00836

Section 14.01.00.00: Request for Certification/Executive Order and Common Application Statements

Ford Motor Company (Ford) has elected to submit its 2014 MY Requests for Certificate of Conformity/Executive Order on a test group basis. The "common" material is a part of each individual Request for Executive Order and/or Certificate of Conformity, unless otherwise indicated.

Section 14.01.01.01: Statement of Compliance

The test vehicles for which data are submitted to demonstrate compliance with the 2014 MY emissions standards, are in all material respects as described in this Application. These vehicles have been tested in accordance with both good engineering practice and with applicable test procedures, utilizing fuels and equipment in compliance with the regulations. On the basis of such tests, these vehicles have met the requirements described in CAP 2000 Regulation 86.1810-01(b); descriptions of tests performed to ascertain compliance with the said section and the data derived from such tests are available to the EPA administrator upon request. These vehicles have also met the requirements described in either CAP 2000 Regulation 86.1810-01(c), (86.1811-01 (f)), (86.1812-01(f), .86.1813-01(f), .86.1814-01(f), and 86.1815-01(f)) as applicable.

Pursuant to CAP 2000 regulation 1829-01(b)(1)(ii)(B), and CAP 2000 regulation 1829-01(b)(2)(ii)(B), Ford has conducted testing and engineering evaluations of vehicles representative of 2011 model year light duty vehicle (LDV) and light duty truck (LDT) test groups and evaporative/refueling families. Based on such testing and evaluations, Ford believes that the vehicles in these LDV and LDT test groups have been designed to comply with the applicable exhaust emission standards and evaporative/refueling standards at high altitude.

Further, with respect to CAP 2000 Regulation 86.1810-01(a), Ford states that new motor vehicles of this engine family conform to the terms of the Statement of Device Safety contained in this Application.

The evaporative emission deterioration factors for this evaporative emission family/evaporative emission control system combination have been derived from test data obtained from testing conducted in accordance with good engineering practice to meet the requirements of CAP 2000 regulation 86.1824-01.

Section 14.01.01.02: Statement of Device Safety

Ford Motor Company (Ford) states that the emission control devices, systems or elements of design installed on or incorporated in Ford Motor Company new motor vehicles or new motor vehicle engines for the purposes of complying with standards prescribed under Section 202 of the Clean Air Act, will not in their operation, to the best of Ford's information and belief, cause the emission into the ambient air of pollutants which cause or contribute to an unreasonable risk to public health, except as specifically permitted by the standards prescribed under the Clean Air Act.

Ford Motor Company also states that to the best of its information and belief the aforementioned emission control devices, systems or design elements do not in their operation or function, result in any reasonably foreseeable unsafe condition which would unreasonably endanger the motor vehicle, its occupants, or persons or property in close proximity to the vehicle, except that any reasonably foreseeable "unsafe condition" that may occur would result only from conditions of abuse or misuse (including tampering or lack of proper maintenance), or a malfunction that is related to abuse or misuse and which would sufficiently affect vehicle drivability, or otherwise put the driver on notice of the condition, so that a reasonably prudent person would likely to have service performed. In support of the above statement, Ford (or it's suppliers) has designed and carried out a testing and analysis program, in accordance with good engineering practice, designed (1) to identify vehicle operations or functions with respect to which it is reasonable to foresee that an "unsafe condition" would result, (2) to identify the reasonably foreseeable causes of such "unsafe conditions", and (3) to determine if such causes are reasonably likely to affect vehicle drivability, or otherwise put the driver on notice of the "unsafe condition" so that a reasonably prudent person would be likely to have service performed.

Descriptions and results of these tests are available for submission to EPA upon its request.

Statement of Conformity Qualification Information – Gasoline Fueled

General Description of Principal Unsafe Condition(s) Being Qualified

The principal unsafe condition being qualified is catalyst or exhaust system overheating. Typically, the overheating could cause combustible material in contact with the exhaust system to be ignited (e.g., grass fire) or materials inside the vehicle to be damaged (e.g., carpet smoldering or melting).

General Description of the Immediate Cause of the Unsafe Condition Being Qualified

The immediate cause of exhaust system overheating is an excess amount of unburned fuel delivered to the exhaust system in the presence of sufficient air to promote oxidation of the fuel.

Principal Types of Abuse, Misuse, Tampering, or Malfunction, Which Might Cause the Unsafe Condition

The principal types of abuse or misuse or malfunction that might cause catalyst or exhaust system overheating are as follows:

Abuse/Misuse/Tampering

Continued driving with an engine over-temperature warning.
Prolonged operation of a vehicle when an overt indication of malfunction exists, e.g., continual operation with an engine that repeatedly misfires.
Excess starter cranking (in excess of 30 seconds) with an intermittently firing or flooded engine.
Disregard of recommended maintenance for the ignition system, fuel system, and emission control system.
Extended high engine speed idle (above normal engine control speed) for more than 5 minutes using a commercial throttle kicker for use as a stationary power source or manually elevating the idle speed above the normal idle speed through the throttle.
Operation of passenger cars in excess of specified maximum passenger and luggage loads and/or maximum recommended trailer weight.
Operation of the light truck in excess of specified GVW and/or GCW.
Tampering or unauthorized modifications to the engine or vehicle such as:
Adjusting ignition timing beyond specified limits.
Altering emissions system components or location or removing components.
Use of unauthorized emission control processors, strategies, and/or calibrations.

Malfunction

Ignition system problems, e.g., persistently misfiring spark plugs, ignition module or coil failure, ignition timing retard.

General Identification of the Manner in Which the Principal Causes Would Affect Drivability or Otherwise Put the Driver on Notice

The principal causes generally would result in a significant degradation of vehicle performance with one or more of the following symptoms:

Extended dieseling (more than 5 seconds or engine run-on with key off)
Persistent misfiring
Odor or smoke
Oil pressure, over-temperature, or charge indicator warning
Repetitive stalls or backfires
Heavy surging
Fluid leakage

Section 14.01.01.03: Statement of Compliance for Unregulated Pollutants

Statement of Conformance with 40 CFR 86.1810-01(a) and CAA Section 202(a) (4)

Ford Motor Company states that the emission control devices, systems, or elements of design installed or incorporated in Ford's new motor vehicles or new motor vehicle engines are expected to conform to the requirements of 86.1810-01(a) and Section 202(a)(4) of the Clean Air Act, to the best of Ford's knowledge and belief. Information and data pertaining to any tests performed in connection with this statement, including but not limited to the emissions characterization information submitted periodically by Ford to EPA, are available to the Administrator upon request.

Section 14.01.01.05: Statement of Particulate Emissions

Pursuant to 86.1829.01(b) (iii) (B), Ford Motor Company asserts that the designs of Ford's Otto-cycle gasoline and methanol fueled vehicles described in the applications are substantially similar to existing designs which have particulate levels significantly below the applicable standards prescribed under CAP 2000 Regulation 86.1811 and 86.1812, .1813, .1814, .1815. Ford also asserts that to the best of its information and belief, these vehicles are expected to demonstrate particulate emission characteristics similar to the existing designs.

Section 14.01.01.06: Statement of Compliance for Warranty

The warranty statements contained in Ford Motor Company Warranty Guides comply with all applicable EPA and CARB regulations

Section 14.01.01.07: Statement of Low Leak Exhaust

Ford Motor Company has conducted its analysis and can therefore state that for Tier 2 and interim non-Tier 2 vehicles beginning with the 2009 model year, the exhaust system has been designed to facilitate leak-free (CFR 86.1844) assembly, installation and operation for the full useful life of the vehicle. Additionally, exhaust systems have been designed to facilitate that such repairs as might be necessary on a properly maintained, undamaged, or unaltered used vehicle can be performed in such a manner as to maintain leak-free operation, using tools commonly available in a motor vehicle dealership or independent repair shop for the full useful life of the vehicle.

Section 14.01.01.08: Statement of Compliance in Lieu of measuring formaldehyde (HCHO) emissions

As a result of amended 86.1829-01 (b) (1) (iii) (E), manufacturer for gasoline fueled and diesel fueled Tier 2 and Interim non-Tier 2 vehicles may provide a statement in its application for certification that such vehicles comply with the applicable standards in lieu of testing formaldehyde emissions. CARB adopted the EPA regulation unchanged, except vehicles referenced mean California LEVs, ULEVs and SULEVs. (California Exhaust Emission Standards and Test Procedures for 2001 and Subsequent Model Passenger Cars, Light-duty Trucks and Medium-duty Vehicles. Part 1, G. 3.1). Based on past testing and engineering judgment, where required all vehicles are expected to conform to the applicable HCHO emission standard.

Section 14.01.01.09: Use of 1.04 NMOG/NMHC Ratio in Lieu of NMOG Testing

In accordance with 86.1810-01(p) and California Exhaust Emission Standards and Test Procedures for 2001 and Subsequent Model Passenger Cars, Light-duty Trucks and Medium-duty Vehicles. Part 1, D.1, Ford has measured NMHC in lieu of NMOG and applied the required adjustment factor.

Section 14.01.01.10: Certification Short Test (CST)

Based on engineering evaluation of past CST testing, where required all vehicles are expected to conform with the applicable emission standards under 40 CFR 86.1811-01(f) for which emissions data are not provided, as allowed under 40 CFR 86.1829.01(b)(4)(i)(B).

Section 14.01.01.11: High Altitude Testing

Pursuant to 40 CFR 86.1829-01 (b)(1)(ii)(B) & (b)(2)(ii)(B), based on engineering evaluation of appropriate high-altitude emission testing, all light-duty vehicles, light-duty trucks and complete heavy-duty vehicles are expected to comply with the applicable emission standards at high altitude.

Section 14.01.01.12: 91 RON (Knock Sensor)

Pursuant to VPCD-97-01, based on testing and engineering judgment, the city and highway fuel economy test result differences between 91 RON operation and 96 RON operation for vehicles equipped with a knock sensor are expected to be within 3%, and there are no emission increases expected (beyond normal test variability) using 91 RON fuel when tested on the FTP cycle (or SFTP cycle as applicable).

Section 14.01.01.13: Defeat Device Avoidance

The applicable test groups have been designed and engineered to comply with 40 CFR 86.1809-12, prohibition of defeat devices.

Based on engineering evaluation of intermediate cold temperature emissions test data, the applicable test groups are expected to comply with intermediate cold testing defeat device avoidance requirements as described in 40 CFR 86.1809-12(e).

Section 14.01.01.14: Fuel Spitback Emissions for ORVR Certified Vehicles

In accordance with 40 CFR 86.1810-01 (l)(1), manufacturers may provide a statement of compliance in lieu of testing Fuel Spitback emissions for ORVR certified vehicles. Ford Motor Company certifies, to the best of its knowledge and belief, that its ORVR-certified vehicles are designed to meet the fuel dispensing spitback standard as part of compliance with the refueling emission standard. This statement is based on previous emission tests, development tests, other applicable information, and good engineering judgment.

Section 14.01.01.16: Air to Fuel Ratio Requirement

Consistent with 40 CFR 86.1810-01(i)(6) and Part I, Section D, paragraph 2.1.4 of the California Exhaust Emission Standards for 2001 and later light-duty vehicles, the air to fuel ratio is not scheduled to be delivered any richer than the leanest air to fuel mixture required to obtain maximum torque (lean best torque), with the exception of cold-start conditions, warm-up conditions, rapid-throttle motion conditions ("tip-in" or "tip-out" conditions), and conditions in which additional enrichment is needed to protect the engine, emission control hardware, or vehicle and occupants. These conditions are described in section 16.05.00 of the Common Section with key calibratable parameters listed in section 16.00.05.00 of the Certification Application.

Section 14.01.02.00: California Fuel Fill Pipe Compliance

Ford Motor Company attests that all 2014 Model Year vehicles meet the California fuel fill pipe and corresponding fill pipe access zone requirements.

Section 14.01.02.01: Environmental Performance Label Statement

The Environmental Performance label will utilize the identical materials, color, size, font, style, overall specifications and printing process as approved by ARB on December 4, 2008.

Section 14.01.02.02: California I/M Tests

Based on past testing and engineering judgment, where required all vehicles are expected to conform with the applicable emission standards for which emissions data are not provided, as allowed under " California Exhaust Emission Standards and Test Procedures for 2001 and Subsequent Model PC, LDT and MDV" Part I, G.3.1.5.

In accordance with regulation 40 CFR 86.1818-12(f)(3) and 86.1829-01(b)(iii)(g) for MDPVs and under-8500 pounds GVWR passenger-cars and light- trucks, Ford Motor Company states the following concerning 2014 MY N2O compliance: Based on engineering evaluation of appropriate N2O emissions testing, Ford Motor Company attests, to the best of its knowledge and belief, that N2O tailpipe emissions do not exceed values summarized below:

Engine size and technology	FTP N2O FUL tailpipe
3.5L GTDI	25 mg/mi
All other powertrains	10 mg/mi

In accordance with regulation 40 CFR 1037.104(c) and 1037.150(e) for heavy-duty chassis certified vehicles 8501 – 14,000 pounds GVWR and vehicles certified under the provisions of 1037.150(l), Ford Motor Company states the following concerning 2014 MY N2O compliance: Based on engineering evaluation of appropriate N2O emissions testing, Ford Motor Company attests, to the best of its knowledge and belief, that N2O tailpipe emissions do not exceed values summarized below:

Engine size and technology	FTP N2O FUL tailpipe
All powertrains	50 mg/mi

ADJUSTABLE PARAMETERS

Ford gas engines do not incorporate any parameters that are considered adjustable. Electronic throttle bodies which electrically control the idle airflow setpoint incorporate a throttle stop or mechanical plunger to set the closed position of the throttle plate. This stop is protected by one of the following methods:

1. A threaded plunger provides a stop which is fixed with a thread adhesive and is designed to break-off to prevent adjustment, or
2. An internal drive hex screw provides a stop and is fixed with thread adhesive and designed to strip to prevent adjustment, or
3. An internal gear provides the stop which is laser-welded and does not have any adjustment capability.

Diesel Exhaust Fluid (DEF) Range Declaration

Ford Motor Company's nominal DEF refill range adheres to the requirements listed in EPA's "Control of Emissions from New Highway Vehicles and Engines; Approval of New Scheduled Maintenance for Selective Catalytic Reduction Technologies" published January 5, 2012. The DEF range for 2014MY Ford Motor Company diesel applications is shown in the table below.

Test Group/Engine Family	DEF Range	Max Fuel Tank Size (if applicable)
EFMXD06.761A	Oil Change Interval	N/A
EFMXD06.771C	Oil Change Interval	N/A
EFMXH06.7A24	3 X Fuel Tank Range	68 gallons
EFMXH06.7B23	3 X Fuel Tank Range	68 gallons

Heavy Duty Vehicle Speed Simulation Procedure

- Please refer to the letter from Todd M. Fagerman (Ford Motor Company) to K. Jennings (EPA) dated May 27, 2004.
- Please refer to the letter from David L. Kulp (Ford Motor Company) to R.B. Summerfield (ARB) dated October 5, 2001.
- Please refer to the letter from David L. Kulp to John Guy (EPA) dated May 18, 2001.
- Please refer to the letter from R.B. Summerfield to David L. Kulp dated July 29, 1996.
- Please refer to the letter from Chester France (EPA) to David L. Kulp dated July 18, 1996.

ED_002078G_00001322-00844

Fuel Recommendation to Vehicle Owners

For 2014 MY Light Duty Vehicle (LDV), Light Duty Truck (LDT), and Heavy Duty Gasoline Engine (HDGE) fuel recommendations, refer to the 2014 MY Owner's Manuals and Service Guides.

CRANKCASE EMISSION CONTROL SYSTEM DESCRIPTION

GENERAL CRANKCASE VENTILATION (PCV) SYSTEM

The Ford Crankcase Emission control System is a Closed Loop (CL) ventilation system that is designed to evacuate crankcase gases from the crankcase and prevent them from escaping into the atmosphere. The crankcase control system controls these gases or vapors, otherwise known as "blow-by" gases, by directing them back into the intake manifold where they are consumed in the normal combustion process.

POSITIVE CRANKCASE VENTILATION (PCV) SYSTEM

The crankcase ventilating air source is the Air Cleaner or Zip Tube. The fresh air passes through a filter located in the air cleaner and then through a hose connecting the air cleaner to the cam/rocker cover(s). The fresh air flows into the overhead and travels throughout the crankcase. The fresh air and blow-by gas leave the crankcase through a flow regulator called a Positive Crankcase Ventilation Valve (PCV valve), and pass into the intake manifold through a connecting hose. The ventilation process goes on continuously while the engine is running.

Service Manuals and Bulletins

Ford has provided EPA and CARB with the Motorcraft website (www.motorcraftservice.com) and password by which these agencies may access owner guides, warranty guides, shop manuals and technical service bulletins.

§17 California ARB Information

17.01.00.00 – California Fill Pipe Specifications

Refer to Section: 14.01.02.00

ED_002078G_00001322-00848

Section 18.00.00.00: Revisions

The 2014 MY Common Section
Initial submission date of 10/29/2012

Revision Number	Revision Date	Page(s) Affected	Description of Revision
Initial Revision	12/03/2012	00.00.00.00 16.13.00.00 16.13.03.00	This update to the initial submission of the Common Section includes addition of the Evaporative & ORVR DF Calculation Sheets and updates the Evaporative/ORVR Family Descriptions Sheet. Finally, this revision updates the Index to reflect bookmark name changes for sections 16.13.00.00 and 16.13.03.00.
1	02/14/2013	00.00.00.00 01.03.00.00 04.00.00.01 09.01.00.00 12.02.01.01 12.02.02.00 16.06.02.02 16.06.02.03 16.06.02.04 16.06.02.05 16.11.03.00 16.13.03.00	This update includes changes to responsibility contact for FTTP Wind Tunnel Testing and Truck Shift Schedule Liaisons. Additionally, the fuel tank size chart, FTTP profile chart and descriptions, CAP2000 Durability Grouping Divisions, as well as the Evaporative / ORVR family descriptions are updated. Next, the MIL/OBD Description for Gasoline Vehicles and OBD strategy sheets are included. Finally, the index is updated to reflect the above changes.
2	03/15/2013	04.00.00.01 09.01.02.00 12.02.01.01 12.02.02.00 16.05.00.00 16.11.01.00 16.11.03.00	This revision updates some test group names as well as includes updates to vehicle names for Police Interceptor Sedan and Police Interceptor Utility.
3	04/09/2013	00.00.00.00 04.00.00.01 12.02.01.01 12.02.02.00 12.04.01.02 14.00.00.00 16.11.01.00 16.11.02.00 16.11.03.00 16.13.03.00	This update includes revisions to the Index, Equivalency Factors by Durability Group, Light Duty Truck & Light Duty Vehicle Fuel Tank Information, Fuel Tank Temperature Profiles, Shifting Instruction – Cars and Attestation sheets. Additionally, the Compliance Phase-In Plan, Federal and Green States Phase-In Summary, CAP 2000 Test Groups, and Evaporative / ORVR Family Description Sheets are updated.
4	06/07/2013	00.00.00.00 04.00.00.01 12.02.01.01 12.02.02.00 16.11.01.00 16.11.01.01 16.11.03.00 16.13.03.00	This update includes revisions to the Index, Equivalency Factors by Durability Group, Light Duty Truck & Light Duty Vehicle Fuel Tank Information, and Fuel Tank Temperature Profiles. Additionally, the Compliance Phase-In Plan, Projected HDE GHG AB&T, CAP 2000 Test Groups, and Evaporative / ORVR Family Description Sheets are updated.
5	06/27/2013	00.00.00.00 14.01.01.17	Added N2O attestation information

Section 18.00.00.00: Revisions

The 2014 MY Common Section
Initial submission date of 10/29/2012

Revision Number	Revision Date	Page(s) Affected	Description of Revision
6	09/17/2013	00.00.00.00 01.01.01.00 01.02.00.00 01.03.00.00 01.04.00.00 09.01.00.00 09.01.00.01 09.01.00.02 09.01.01.00 09.01.02.00 12.01.01.00 12.01.02.00 12.02.01.01 12.02.02.00 12.03.00.00 12.03.01.00 12.03.02.00 15.01.01.00 16.05.00.00 16.06.02.00 – 16.06.02.12 16.11.01.00 16.11.01.01 16.13.03.00	This update includes revisions to the Index, Cognizant Technical Representative, Facsimile Information, Liaison Information, On-Site Certification Engineering Observers at EPA, MIL / OBD Descriptions, OBD Connector Location, and OBD Group / Test Group Summary sheets. Next, this update includes revisions to the Light Duty Vehicle RLD / CDT Summary, Light Duty Truck RLD / CDT Summary, Fuel Tank Information, Fuel Tank Temperature Profiles, Transmission Identification Chart, Transmissions – Automatic, and Transmissions Manual pages. Next, added to this document is the Diesel Exhaust Fluid (DEF) Range Declaration. Finally, this update includes revisions to AECD Descriptions – Gasoline, OBD Strategies, Compliance Phase-In Plan, Projected HDE GHG AB&T, and the Evaporative / ORVR Family Description sheets.
7	10/03/2013	12.01.01.00 12.03.00.00 12.04.02.08 16.11.01.00 16.11.01.01	This update includes changing the Special Service Police FFV to Special Service Police FWD on the Light Duty Vehicle RLD / CDT Summary Index sheet. Additionally updated are the Automatic Transmission Identification Chart, Special PCM Reflash Preconditioning Procedure sheet, Compliance Phase-in Plan, and the Projected HDE GHG AB&T sheet.