Atlantic Richfield Company

Anthony R. Brown
Project Manager, Mining

4 Centerpointe Drive, 2nd Floor Suite 200
La Palma, CA 90623-1066
Office: (714) 228-6770
Fax: (714) 228-6749
E-mail: Anthony.Brown@bp.com

June 27, 2016

Lynda Deschambault
Remedial Project Manager, Superfund Division
U.S. Environmental Protection Agency, Region 9
75 Hawthorne Street, 10th Floor (SFD 7-1)
San Francisco, California 94105

Subject: Revised Exposure Parameter Tables for Baseline Human Health Risk Assessment Work Plan
Leviathan Mine Site
Alpine County, California

Dear Ms. Deschambault:

As we discussed during the meeting on June 13, 2016, Atlantic Richfield Company (Atlantic Richfield) is submitting revised versions of Tables 4.1 and 4.2 from the Baseline Human Health Risk Assessment Work Plan, Revision 1 (BHHRA Work Plan) for your review. These tables reflect Atlantic Richfield's responses to comments (RTCs) dated December 4, 2015 and February 19, 2016, which were prepared in response to comments from the U.S. Environmental Protection Agency (U.S. EPA) dated October 13, 2015, and January 12, 2016, and from the Lahontan Regional Water Quality Control Board (LRWQCB) dated December 21, 2015.

As we discussed during the June 13 meeting, we are submitting these tables for U.S. EPA's review so that any further changes to the exposure assumptions can be reflected in U.S. EPA's pending response to Atlantic Richfield's RTCs dated February 19, 2016. The entries in the table have been color-coded to distinguish new exposure scenarios or pathways (orange), changes to exposure assumptions (green), and updates to references (blue). We are also including an updated version of the human health conceptual site model (Figure 2 from the BHHRA Work Plan) to assist with this review.

If you have any questions or comments, please feel free to contact me at (714) 228-6770 or anthony.brown@bp.com.

Sincerely,

Anthony R. Brown
Project Manager, Mining

Enclosures: Revised Tables 4.1 and 4.2 from the BHHRA Work Plan
Revised Conceptual Site Model from the BHHRA Work Plan

cc: Gary Riley, U.S. Environmental Protection Agency, Region 9 – via electronic copy
John Hillenbrand, U.S. Environmental Protection Agency, Region 9 – via electronic copy
Douglas Carey, Lahontan Regional Water Quality Control Board – via electronic copy
Nathan Block, Esq., BP – via electronic copy
Adam Cohen, Esq., Davis Graham & Stubbs, LLP – via electronic copy
Sandy Riese, EnSci, Inc. – via electronic copy
Marc Lombardi, Amec Foster Wheeler – via electronic copy
Grant Ohland, Ohland HydroGeo, LLC – via electronic copy
Dave McCarthy, Copper Environmental Consulting – via electronic copy
Cory Koger, U.S. Army Corps of Engineers – via electronic copy
Greg Reller, Burleson Consulting – via electronic copy
Lynelle Hartway, Esq., Washoe Tribe of California and Nevada – via electronic copy
Fred Kirschner, AESE, Inc. – via electronic copy
Sophia Serda, U.S. Environmental Protection Agency, Region 9 – via electronic copy

P:\Project\13000s\13091 Leviathan\4000 Regulatory\4145 HHRA Work Plan\2016_06 Exp Revs to EPA\160627 AR Letter Transmit_BHHRA Tables.docx

TABLES

TABLE 4.1
EXPOSURE PARAMETERS FOR ADULT RECEPTOR - REASONABLE MAXIMUM EXPOSURE
Leviathan Mine Site
Alpine County, California

Color Coding	New scenario or new pathway added.	Updated reference but no change to value.	Exposure assumption updated.

Exposure Parameter	Abbreviation	Units		Current/Future Trespasser	Current and Future Recreational Visitor	Current and Future ATV Rider	Future Off-Site Rancher	Current and Future Off-Site[1] Resident	Current and Future Forager	Future Subsistence Washoe Tribe Member
GENERAL EXPOSURE PARAMETERS [2]										
Exposure Frequency	EF	days/year	Value:	7	14	52	350	350	60	365
			Rationale:	Professional judgment; Appendix B	Professional judgement, two-week vacation period (U.S. EPA, 2014)	Professional judgement; once per week during year	DTSC, 2014; U.S. EPA, 2014	DTSC, 2014; U.S. EPA, 2014	ATSDR, 2003; estimated time spent in vicinity of mine per year.	Year-round
Exposure Duration	ED	years	Value:	1	20	26	20	20	64	64
			Rationale:	Professional judgment; trespassing on site occurs once in a lifetime.	DTSC, 2014; U.S. EPA, 2014	DTSC, 2014; U.S. EPA, 2014	DTSC, 2014; U.S. EPA, 2014	DTSC, 2014; U.S. EPA, 2014	Lifetime after childhood; 70 year lifetime	Lifetime after childhood; 70 year lifetime
Body Weight	BW	kg	Value:	80	80	80	80	80	80	80
			Rationale:	DTSC, 2014; U.S. EPA, 2014	DTSC, 2014; U.S. EPA, 2014	DTSC, 2014; U.S. EPA, 2014	DTSC, 2014; U.S. EPA, 2014	DTSC, 2014; U.S. EPA, 2014	DTSC, 2014; U.S. EPA, 2014	DTSC, 2014; U.S. EPA, 2014
Averaging Time	AT	days	Value:	25550 (ATca; carcinogens) 365 (ATnc; noncarcinogens)	25550 (ATca; carcinogens) 7300 (ATnc; noncarcinogens)	25550 (ATca; carcinogens) 9490 (ATnc; noncarcinogens)	25550 (ATca; carcinogens) 7300 (ATnc; noncarcinogens)	25550 (ATca; carcinogens) 7300 (ATnc; noncarcinogens)	25550 (ATca; carcinogens) 23360 (ATnc; noncarcinogens)	25550 (ATca; carcinogens) 23360 (ATnc; noncarcinogens)
			Rationale:	DTSC, 2014; U.S. EPA, 2014	DTSC, 2014; U.S. EPA, 2014	DTSC, 2014; U.S. EPA, 2014	DTSC, 2014; U.S. EPA, 2014	DTSC, 2014; U.S. EPA, 2014	DTSC, 2014; U.S. EPA, 2014	DTSC, 2014; U.S. EPA, 2014
PATHWAY-SPECIFIC PARAMETERS										
Ingestion of Water [3]										
Ingestion Rate	IRw	liters/day	Value:	2.5	2.5		2.5		2.5	3
			Rationale:	DTSC, 2014; U.S. EPA, 2014	DTSC, 2014; U.S. EPA, 2014		DTSC, 2014; U.S. EPA, 2014		DTSC, 2014; U.S. EPA, 2014	AESE, 2005b; 3 liters per day plus 1 liter for each use of the sweat lodge during ritual purification; at 24 uses per year, this is 3.065 liters per day, which we are rounding down to 3.
Dermal Contact with Surface Water - Wading										
Surface Area	SAw	cm^2	Value:	6,032	6,032		6,032		6,032	6,032
			Rationale:	DTSC, 2014; U.S. EPA, 2014	DTSC, 2014; U.S. EPA, 2014		DTSC, 2014; U.S. EPA, 2014		DTSC, 2014; U.S. EPA, 2014	DTSC, 2014; U.S. EPA, 2014
Event Duration - Wading	$tevent_w$	hours/day	Value:	1	1		1		1	1
			Rationale:	ATSDR, 2003	ATSDR, 2003		ATSDR, 2003		ATSDR, 2003	ATSDR, 2003
Event Frequency	EVw	events/day	Value:	1	1		1		1	1
			Rationale:	ATSDR, 2003	ATSDR, 2003		ATSDR, 2003		U.S. EPA, 2004a	U.S. EPA, 2004a
Exposure Frequency - Wading	EFw	days	Value:	7	14		12		60	84
			Rationale:	Professional judgment	Professional judgement; once per day for two-week vacation period (U.S. EPA, 2014)		Professional judgement; wading once per week during 12 weeks in the summer		ATSDR, 2003; estimated time spent in vicinity of mine per year.	Professional judgment; exposure occurs daily over 12 weeks of summer.

TABLE 4.1
EXPOSURE PARAMETERS FOR ADULT RECEPTOR - REASONABLE MAXIMUM EXPOSURE
Leviathan Mine Site
Alpine County, California

Exposure Parameter	Abbreviation	Units		Current/Future Trespasser	Current and Future Recreational Visitor	Current and Future ATV Rider	Future Off-Site Rancher	Current and Future Off-Site[1] Resident	Current and Future Forager	Future Subsistence Washoe Tribe Member
Dermal Contact with Surface Water - Swimming/Bathing										
Surface Area	SAsw	cm^2	Value:	20,900	20,900		20,900		20,900	20,900
			Rationale:	DTSC, 2014; U.S. EPA, 2014	DTSC, 2014; U.S. EPA, 2014		DTSC, 2014; U.S. EPA, 2014		DTSC, 2014; U.S. EPA, 2014	DTSC, 2014; U.S. EPA, 2014
Exposure Frequency - Swimming/Bathing	EFsw	days/year	Value:	2	4		12		24	104
			Rationale:	ATSDR, 2003; U.S. EPA, 2011c; 2 swims per week (average from ATSDR, 2003) for 1 week	ATSDR, 2003; U.S. EPA, 2011c; 2 swims per week (average from ATSDR, 2003) for 2 weeks		Professional judgement; 1 swim per week for 12 weeks in summer		ATSDR, 2003; U.S. EPA, 2011c; 2 swims per week (average from ATSDR, 2003) for 12 weeks in summer	Assumes that surface or ground water is used for bathing two times per week.
Event Duration - Swimming/Bathing	$tevent_{sw}$	hr/day	Value:	0.71	0.71		0.71		0.71	0.71
			Rationale:	U.S. EPA, 2014	U.S. EPA, 2014		U.S. EPA, 2014		U.S. EPA, 2014	U.S. EPA, 2014
Event Frequency	EVsw	events/day	Value:	1	1		1		1	1
			Rationale:	U.S. EPA, 2004a	U.S. EPA, 2004a		U.S. EPA, 2004a		U.S. EPA, 2004a	U.S. EPA, 2004a
Ingestion of Aquatic Organisms										
Fraction from Study Area	Fa	%	Value:	less than or equal to 100%	less than or equal to 100%		less than or equal to 100%		71	71
			Rationale:	100% pending further analysis and concurrence by U.S. EPA	100% pending further analysis and concurrence by U.S. EPA		100% pending further analysis and concurrence by U.S. EPA		AESE, 2005b	AESE, 2005b
Ingestion Rate	IRao	g/day	Value:	42	42		42		200 (200 * 0.71 = 142)	200 (200 * 0.71 = 142)
			Rationale:	U.S. EPA, 2011c; Table 10-5; 95th percentile; Freshwater recreational fishing in Washington State.	U.S. EPA, 2011c; Table 10-5; 95th percentile; Freshwater recreational fishing in Washington State.		U.S. EPA, 2011c; Table 10-5; 95th percentile; Freshwater recreational fishing in Washington State.		AESE, 2005b; Due to size of the site-specific streams, the fish ingestion rate was lowered in AESE's RME scenario from 200 g/day to 142 g/day using a fraction from study area value of 71%.	AESE, 2005b; Due to size of the site-specific streams, the fish ingestion rate was lowered in AESE's RME scenario from 200 g/day to 142 g/day using a fraction from study area value of 71%.
Ingestion of Wildlife										
Fraction from Study Area	Fa	%	Value:	less than or equal to 100%	less than or equal to 100%		less than or equal to 100%		less than or equal to 100%	less than or equal to 100%
			Rationale:	100% pending further analysis and concurrence by U.S. EPA	100% pending further analysis and concurrence by U.S. EPA		100% pending further analysis and concurrence by U.S. EPA		100% pending further analysis and concurrence by U.S. EPA	100% pending further analysis and concurrence by U.S. EPA
Ingestion Rate [4]	IRwl	g/day	Value:	86	86		--		200	278
			Rationale:	U.S. EPA, 2011c; 50 percent of Table 11-1 weighted total meat consumption for ages 6 to 26 years	U.S. EPA, 2011c; 50 percent of Table 11-1 weighted total meat consumption for ages 6 to 26 years		Beef consumption from cattle raised at the ranch provides the main source of protein which is supplemented by non-site related sources.		U.S. EPA, 2011c; Table 11-18; 100 percent of the total mean meat consumption for American Indian	AESE, 2005b, Note: Ingestion of wildlife species will be replaced with ingestion of livestock raised at the Pine Nut Allottments for subsistence tribe members.

TABLE 4.1
EXPOSURE PARAMETERS FOR ADULT RECEPTOR - REASONABLE MAXIMUM EXPOSURE
Leviathan Mine Site
Alpine County, California

Exposure Parameter	Abbreviation	Units		Current/Future Trespasser	Current and Future Recreational Visitor	Current and Future ATV Rider	Future Off-Site Rancher	Current and Future Off-Site[1] Resident	Current and Future Forager	Future Subsistence Washoe Tribe Member
Ingestion of Plants										
Fraction from Study Area	Fa	%	Value:	less than or equal to 100%	less than or equal to 100%		less than or equal to 100%	less than or equal to 100%	less than or equal to 100%	less than or equal to 100%
			Rationale:	100% pending further analysis and concurrence by U.S. EPA	100% pending further analysis and concurrence by U.S. EPA		100% pending further analysis and concurrence by U.S. EPA	100% pending further analysis and concurrence by U.S. EPA	100% pending further analysis and concurrence by U.S. EPA	100% pending further analysis and concurrence by U.S. EPA
Ingestion Rate [5]	IRp	g/day	Value:	132	132		132	237	464	Total plant consumption = 1936; 80 for pine nuts, 300 for roots/tubers, 300 for bulbs, 333 for berries/fruits/garden vegetables, 833 for greens, 50 for seeds/grain, 40 for honey/teas
			Rationale:	U.S. EPA, 2011c; 50 percent of Mean consumption rates of vegetables and fruit (Table 9-4) for the overall population multiplied by 80 kg body weight. Trespasser is assumed to bring food with him so only 50% is based on foraging.	U.S. EPA, 2011c; 50 percent of Mean consumption rates of vegetables and fruit (Table 9-4) for the overall population multiplied by 80 kg body weight. Recreator is assumed to bring food with him so only 50% is based on foraging.		U.S. EPA, 2011c; 50 percent of Mean consumption rates of vegetables and fruit (Table 9-4) for the overall population multiplied by 80 kg body weight. Rancher is assumed to consume only 50% of plant ingestion based on foraging.	U.S. EPA, 2011c; based on mean consumption rates of home-produced vegetables in the West (Table 13-14) and homeproduced fruit in the West (Table 13-9).	U.S. EPA, 2011c; 100 percent of the mean consumption rates of vegetables and fruit for American Indian (Table 9-14). Can be apportioned among various plant types if plant concentrations are sufficiently different.	AESE, 2005b, RME scenario
Ingestion of Beef										
Fraction from Study Area	Fa	%	Value:				less than or equal to 100%			less than or equal to 100%
			Rationale:				100% pending further analysis and concurrence by U.S. EPA			100% pending further analysis and concurrence by U.S. EPA
Ingestion Rate	IRb	g/day	Value:				62			278
			Rationale:				U.S. EPA, 2011c; Table 11-5; total mean beef consumption rate			AESE, 2005b. This rate assumes that domestically raised animals will provided 100% of exposure and that cattle will be used as the representative animal for that exposure.
Ingestion of Soil										
Ingestion Rate	IRs	mg/day	Value:	150	150	150	100	100	150	400
			Rationale:	Standard adult soil ingestion (U.S. EPA, 2014) increased by 50 percent to account for increase at a campground based on Table 5-5 (U.S. EPA, 2011c).	Standard adult soil ingestion (U.S. EPA, 2014) increased by 50 percent to account for increase at a campground based on Table 5-5 (U.S. EPA, 2011c).	Standard adult soil ingestion (U.S. EPA, 2014) increased by 50 percent to account for increase at a campground based on Table 5-5 (U.S. EPA, 2011c). Assumed that ATV rider may have similar increase for ingestion.	DTSC, 2014; U.S. EPA, 2014	DTSC, 2014; U.S. EPA, 2014	Standard adult soil ingestion (U.S. EPA, 2014) increased by 50 percent to account for increase at a campground based on Table 5-5 (U.S. EPA, 2011c).	AESE, 2005b. This rate is based on indoor and outdoor activities, a greater rate of gathering, processing, and other uses of natural resources, as well as on residual soil on grown and gathered plants. Episodic events (1 gram each) are considered, such as wetland gathering, cultural activities with higher soil contact, and so on. It does not specifically include geophagia or pica.
Dermal Contact with Soil										
Surface Area	SAs	cm^2/event	Value:	6,032	6,032	6,032	6,032	6,032	6,032	6,032
			Rationale:	DTSC, 2014; U.S. EPA, 2014	DTSC, 2014; U.S. EPA, 2014	DTSC, 2014; U.S. EPA, 2014	DTSC, 2014; U.S. EPA, 2014	DTSC, 2014; U.S. EPA, 2014	DTSC, 2014; U.S. EPA, 2014	DTSC, 2014; U.S. EPA, 2014
Soil/Skin Adherence Factor	SAFs	mg/cm^2	Value:	0.2	0.2	0.2	0.2	0.07	0.2	0.2
			Rationale:	DTSC, 2014; industrial worker	DTSC, 2014; industrial worker	DTSC, 2014; industrial worker	DTSC, 2014; industrial worker	DTSC, 2014; U.S. EPA, 2014	DTSC, 2014; industrial worker	DTSC, 2014; industrial worker
Event Frequency	EVs	events/day	Value:	1	1	1	1	1	1	1
			Rationale:	U.S. EPA, 2004a	U.S. EPA, 2004a	U.S. EPA, 2004a	U.S. EPA, 2004a	U.S. EPA, 2004a	U.S. EPA, 2004a	U.S. EPA, 2004a
Inhalation of Soil Particulates in Ambient Air										
Particulate Emission Factor[7]	PEF	m^3/kg	Value:	1.316×10^9	1.316×10^9	2.9×10^5	1.316×10^9	to be calculated [6]	1.316×10^9	1.316×10^9
			Rationale:	U.S. EPA, 2002c; Site-specific values may be developed.	U.S. EPA, 2002c; Site-specific values may be developed.	ATSDR, 2008	U.S. EPA, 2002c; Site-specific values may be developed.	--	U.S. EPA, 2002c; Site-specific values may be developed.	U.S. EPA, 2002c; Site-specific values may be developed.
Exposure Time	ET	hours/day	Value:	24	24	4	24	24	24	24
			Rationale:	Entire day	Entire day	ATV use for 4 hours a day	Entire day	Entire day	Entire day	Entire day

TABLE 4.1
EXPOSURE PARAMETERS FOR ADULT RECEPTOR - REASONABLE MAXIMUM EXPOSURE
Leviathan Mine Site
Alpine County, California

Exposure Parameter	Abbreviation	Units		Current/Future Trespasser	Current and Future Recreational Visitor	Current and Future ATV Rider	Future Off-Site Rancher	Current and Future Off-Site[1] Resident	Current and Future Forager	Future Subsistence Washoe Tribe Member
Ingestion of Sediment										
Ingestion Rate	IRsd	mg/day	Value:	15	15		10		15	40
			Rationale:	VDEQ, 2016; 10% of soil ingestion rate	VDEQ, 2016; 10% of soil ingestion rate		VDEQ, 2016; 10% of soil ingestion rate		VDEQ, 2016; 10% of soil ingestion rate	VDEQ, 2016; 10% of soil ingestion rate
Exposure Frequency - Wading	EFw	days	Value:	7	14		12		60	84
			Rationale:	Professional judgment; Appendix B	Professional judgement, two-week vacation period (U.S. EPA, 2014)		Professional judgement; wading once per week during 12 weeks in the summer		ATSDR, 2003; estimated time spent in vicinity of mine per year.	Professional judgment; exposure occurs daily over 12 weeks of summer.
Dermal Contact with Sediment										
Surface Area	SAsd	cm^2/event	Value:	5,120	5,120		5,120		5,120	5,120
			Rationale:	EFH, 2011c; Table 7-12; total of mean values for lower leg, feet, and hands of adult males	EFH, 2011c; Table 7-12; total of mean values for lower leg, feet, and hands of adult males		EFH, 2011c; Table 7-12; total of mean values for lower leg, feet, and hands of adult males		EFH, 2011c; Table 7-12; total of mean values for lower leg, feet, and hands of adult males	EFH, 2011c; Table 7-12; total of mean values for lower leg, feet, and hands of adult males
Sediment/Skin Adherence Factor	SAFsd	mg/cm^2	Value:	0.2	0.2		0.2		0.2	0.2
			Rationale:	DTSC, 2014; industrial worker	DTSC, 2014; industrial worker		DTSC, 2014; industrial worker		DTSC, 2014; industrial worker	DTSC, 2014; industrial worker
Event Frequency - Wading	EVw	events/day	Value:	1	1		1		1	1
			Rationale:	U.S. EPA, 2004a	U.S. EPA, 2004a		U.S. EPA, 2004a		U.S. EPA, 2004a	U.S. EPA, 2004a
Exposure Frequency - Wading	EFw	days	Value:	7	14		12		60	84
			Rationale:	Professional judgment; Appendix B	Professional judgement, two-week vacation period (U.S. EPA, 2014)		Professional judgement; wading once per week during 12 weeks in the summer		ATSDR, 2003; estimated time spent in vicinity of mine per year.	Professional judgment; exposure occurs daily over 12 weeks of summer.

Notes
1. The off-site receptors do not access the on-property study areas, but may be exposed based on transport of chemicals to these specific supplemental study areas.
2. General exposure parameters apply to all pathways except where noted.
3. Water supply is assumed to be either groundwater or surface water as appropriate to the scenario. Both groundwater and surface water on-site will be considered for the subsistence Washoe scenario. Only surface water will be considered for the trespasser, recreational visitor, foraging Washoe tribe member, and River Ranch scenarios.
4. Ingestion rates may be subdivided or combined by type of wildlife once site-specific data is available.
5. Ingestion rates may be subdivided or combined by type of plant once site-specific data is available.

Shading indicates an incomplete exposure pathway for a particular receptor.

References

AESE, Inc., 2005b, Draft Washoe Tribe Provisional Reasonable Maximum Exposure Factors (RME) for the Leviathan Mine Superfund Site Risk Assessments, June 2
Agency for Toxic Substances Disease Registry (ATSDR), 2003, Public Health Assessment Evaluation of Leviathan Mine Site, Leviathan Mine, Markleeville, Alpine County, California, U.S. Department of Health & Human Services (HHS), May 7: Report prepared by the California Department of Health Services.
Agency for Toxic Substances and Disease Registry (ATSDR), 2008, Health Consultation, Standard Mine, Gunnison County, CO, CERCLIS NO. CO0002378230, February.
Department of Toxic Substances Control (DTSC), 2014, HERO HHRA Note 1: Recommended DTSC Default Exposure Factors for use in Risk Assessment at California Hazardous Waste Sites and Permitted Facilities. California Environmental Protection Agency.
U.S. Environmental Protection Agency (U.S. EPA), 2000, Methodology for deriving ambient water quality criteria for protection of human health.
U.S. Environmental Protection Agency (U.S. EPA), 2002c, Supplemental Guidance for Developing Soil Screening Levels for Superfund Sites.
U.S. Environmental Protection Agency (U.S. EPA), 2004a, Risk Assessment Guidance for Superfund, Volume 1: Human Health Evaluation Manual (Part E, Supplemental Guidance for Dermal Risk Assessment).
U.S. Environmental Protection Agency (U.S. EPA), 2011c, Exposure Factors Handbook, Volume I, General Factors, October.
U.S. Environmental Protection Agency (U.S. EPA), 2014, Human Health Evaluation Manual, Supplemental Guidance: Update of Standard Default Exposure Factors.
Virginia Department of Environmental Quality (VDEQ), 2016, Voluntary Remediation Program Risk Assessment Guidelines,

Abbreviations
-- = not applicable
cm^2 = square centimeters
g = grams
hr = hour
kg = kilograms
m^3 = cubic meters
mg = milligrams

TABLE 4.2
EXPOSURE PARAMETERS FOR CHILD RECEPTOR - REASONABLE MAXIMUM EXPOSURE
Leviathan Mine Site
Alpine County, California

Color Coding	New scenario or new pathway added.	Updated reference but no change to value.	Exposure assumption updated.

Exposure Parameter	Abbreviation	Units		Current and Future Recreational Visitor	Future Off-Site Rancher	Current and Future Off-Site[1] Resident	Current and Future Forager	Future Subsistence Washoe Tribe Member
GENERAL EXPOSURE PARAMETERS [2]								
Exposure Frequency	EF	days/year	Value:	14	350	350	60	365
			Rationale:	Professional judgement, two-week vacation period (U.S. EPA, 2014)	DTSC, 2014; U.S. EPA, 2014	DTSC, 2014; U.S. EPA, 2014	ATSDR, 2003; estimated time spent in vicinity of mine per year.	Year-round
Exposure Duration	ED	years	Value:	6	6	6	6	6
			Rationale:	U.S. EPA, 1989; U.S. EPA, 2014	U.S. EPA, 1989; U.S. EPA, 2014	U.S. EPA, 1989; U.S. EPA, 2014	U.S. EPA, 1989; U.S. EPA, 2014	U.S. EPA, 1989; U.S. EPA, 2014
Body Weight	BW	kg	Value:	15	15	15	15	15
			Rationale:	DTSC, 2014; U.S. EPA, 2014	DTSC, 2014; U.S. EPA, 2014	DTSC, 2014; U.S. EPA, 2014	DTSC, 2014; U.S. EPA, 2014	DTSC, 2014; U.S. EPA, 2014
Averaging Time	AT	days	Value:	25550 (ATca; carcinogens) 2190 (ATnc; noncarcinogens)	25550 (ATca; carcinogens) 2190 (ATnc; noncarcinogens)	25550 (ATca; carcinogens) 2190 (ATnc; noncarcinogens)	25550 (ATca; carcinogens) 2190 (ATnc; noncarcinogens)	25550 (ATca; carcinogens) 2190 (ATnc; noncarcinogens)
			Rationale:	DTSC, 2014; U.S. EPA, 2014	DTSC, 2014; U.S. EPA, 2014	DTSC, 2014; U.S. EPA, 2014	DTSC, 2014; U.S. EPA, 2014	DTSC, 2014; U.S. EPA, 2014
PATHWAY-SPECIFIC PARAMETERS								
Ingestion of Water [3]								
Ingestion Rate	IRw	L/day	Value:	0.78	0.78		0.78	0.78
			Rationale:	DTSC, 2014; U.S. EPA, 2014	DTSC, 2014; U.S. EPA, 2014		DTSC, 2014; U.S. EPA, 2014	DTSC, 2014; U.S. EPA, 2014
Dermal Contact with Surface Water – Wading								
Surface Area	SAw	cm^2	Value:	2,690	2,690		2,690	2,690
			Rationale:	DTSC, 2014; U.S. EPA, 2014	DTSC, 2014; U.S. EPA, 2014		DTSC, 2014; U.S. EPA, 2014	DTSC, 2014; U.S. EPA, 2014
Event Duration – Wading	$tevent_w$	hr/day	Value:	1	1		1	1
			Rationale:	ATSDR, 2003	ATSDR, 2003		ATSDR, 2003	ATSDR, 2003
Event Frequency	EVw	events/day	Value:	1	1		1	1
			Rationale:	U.S. EPA, 2004a	U.S. EPA, 2004a		U.S. EPA, 2004a	U.S. EPA, 2004a
Exposure Frequency – Wading	EFw	days/year	Value:	14	12		60	84
			Rationale:	Professional judgement, two-week vacation period (U.S. EPA, 2014)	Professional judgement: wading once per week during 12 weeks in the summer.		ATSDR, 2003; estimated time spent in vicinity of mine per year.	Professional judgment; exposure occurs daily over 12 weeks of summer.

TABLE 4.2
EXPOSURE PARAMETERS FOR CHILD RECEPTOR - REASONABLE MAXIMUM EXPOSURE
Leviathan Mine Site
Alpine County, California

Exposure Parameter	Abbreviation	Units		Current and Future Recreational Visitor	Future Off-Site Rancher	Current and Future Off-Site[1] Resident	Current and Future Forager	Future Subsistence Washoe Tribe Member
Dermal Contact with Surface Water – Swimming/Bathing								
Surface Area	SAsw	cm^2	Value:	6,378	6,378		6,378	6,378
			Rationale:	DTSC, 2014; U.S. EPA, 2014	DTSC, 2014; U.S. EPA, 2014		DTSC, 2014; U.S. EPA, 2014	DTSC, 2014; U.S. EPA, 2014
Exposure Frequency – Swimming/Bathing	EFsw	days/year	Value:	4	12		24	104
			Rationale:	Professional judgement; two swims per week for a two-week vacation period	Professional judgement; 1 swim per week for 12 weeks in summer		ATSDR, 2003; U.S. EPA, 2011c; 2 swims per week (average from ATSDR, 2003) for 12 weeks in	Assumes that surface or groundwater is used for bathing two times per week.
Event Frequency	EVsw	events/day	Value:	1	1		1	1
			Rationale:	U.S. EPA, 2004a	U.S. EPA, 2004a		U.S. EPA, 2004a	U.S. EPA, 2004a
Event Duration – Swimming/Bathing	$tevent_{sw}$	hr/day	Value:	1	1		1	1.0
			Rationale:	ATSDR, 2003; U.S. EPA 2011c	ATSDR, 2003; U.S. EPA 2011c		ATSDR, 2003; U.S. EPA 2011c	ATSDR, 2003; U.S. EPA 2011c
Ingestion of Aquatic Organisms								
Fraction from Study Area	Fa	%	Value:	less than or equal to 100%	less than or equal to 100%		71	71
			Rationale:	100% pending further analysis and concurrence by U.S. EPA	100% pending further analysis and concurrence by U.S. EPA		AESE, 2005b	AESE, 2005b
Ingestion Rate	IRao	g/day	Value:	29	29		100 (100 * 0.71 = 71)	100 (100 * 0.71 = 71)
			Rationale:	U.S. EPA, 2011c; Table 10-5; 95th percentile; children of freshwater recreational anglers in Washington State.	U.S. EPA, 2011c; Table 10-5; 95th percentile; children of freshwater recreational anglers in Washington State.		AESE, 2005b; 50 percent of Adult Washoe Tribe Member ingestion of aquatic organisms rate	AESE, 2005b; 50 percent of Adult Washoe Tribe Member ingestion of aquatic organisms rate
Ingestion of Wildlife								
Fraction from Study Area	Fa	%	Value:	less than or equal to 100%	less than or equal to 100%		less than or equal to 100%	less than or equal to 100%
			Rationale:	100% pending further analysis and concurrence by U.S. EPA	100% pending further analysis and concurrence by U.S. EPA		100% pending further analysis and concurrence by U.S. EPA	100% pending further analysis and concurrence by U.S. EPA
Ingestion Rate [4]	IRwl	g/day	Value:	53	--		53	53
			Rationale:	U.S. EPA, 2011c; mean meat intake; weighted average for child from birth 6 years (Table 11-4).	Beef consumption from cattle raised at the ranch provides the main source of protein which is supplemented by non-site related sources.		U.S. EPA, 2011c; mean meat intake; weighted average for child from birth 6 years (Table 11-4).	U.S. EPA, 2011c; mean meat intake; weighted average for child from birth 6 years (Table 11-4).
Ingestion of Beef								
Ingestion Rate	IRb	g/day	Value:		22			139
			Rationale:		U.S. EPA, 2011c, Table 11-6, weighted average beef consumption from birth to five years old.			AESE, 2005b. This rate assumes that domestically raised animals will provided 100% of exposure and that cattle will be used as the representative animal for that exposure. Exposure is 50 percent of adult exposure.

TABLE 4.2
EXPOSURE PARAMETERS FOR CHILD RECEPTOR - REASONABLE MAXIMUM EXPOSURE
Leviathan Mine Site
Alpine County, California

Exposure Parameter	Abbreviation	Units		Current and Future Recreational Visitor	Future Off-Site Rancher	Current and Future Off-Site[1] Resident	Current and Future Forager	Future Subsistence Washoe Tribe Member
Ingestion of Plants								
Fraction from Study Area	Fa	%	Value:	less than or equal to 100%	less than or equal to 100%		less than or equal to 100%	less than or equal to 100%
			Rationale:	100% pending further analysis and concurrence by U.S. EPA	100% pending further analysis and concurrence by U.S. EPA		100% pending further analysis and concurrence by U.S. EPA	100% pending further analysis and concurrence by U.S. EPA
Ingestion Rate [5]	IRp	g/day	Value:	96	96	144	192	20 for pine nuts, 75 for roots/tubers, 75 for bulbs, 83 for berries/fruits/garden vegetables, 208 for greens, 12 for seeds/grain, 10 for honey/teas, Total plant consumption = 968
			Rationale:	U.S. EPA, 2011c; 50 percent of age-weighted mean consumption rates of vegetables and fruit (Table 9-4) multiplied by 15 kg body weight. Recreator is assumed to bring food with him so only 50% is based on foraging.	U.S. EPA, 2011c; 50 percent of age-weighted mean consumption rates of vegetables and fruit (Table 9-4) multiplied by 15 kg body weight. Rancher is assumed to obtain food from other sources so only 50% is based on foraging.	U.S. EPA, 2008b; Mean value of home-produced intake of vegetables and home-produced intake of fruits; weighted average for child 1 to 6 years (Table ES-1).	U.S. EPA, 2011c; 100 percent of the mean consumption rates of vegetables and fruit for American Indian (Table 9-14). Can be apportioned among various plant types if plant concentrations are sufficiently different.	AESE, 2005b, RME scenario. Exposure is 50 percent of adult exposure.
Ingestion of Soil								
Ingestion Rate	IRs	mg/day	Value:	200	200	200	400	400
			Rationale:	DTSC, 2014; U.S. EPA, 2014	DTSC, 2014; U.S. EPA, 2014	DTSC, 2014; U.S. EPA, 2014	AESE, 2005	AESE, 2005
Dermal Contact with Soil								
Surface Area	SAs×SAFs	cm^2	Value:	2,900	2,900	2,900	2,900	2,900
			Rationale:	DTSC, 2014	DTSC, 2014	DTSC, 2014	DTSC, 2014	DTSC, 2014
Skin Adherence Factor	SAF	mg/cm^2	Value:	0.2	0.2	0.2	0.2	0.2
			Rationale:	DTSC, 2014; U.S. EPA, 2014	DTSC, 2014; U.S. EPA, 2014	DTSC, 2014; U.S. EPA, 2014	DTSC, 2014; U.S. EPA, 2014	DTSC, 2014; U.S. EPA, 2014
Event Frequency	EVs	events/day	Value:	1	1	1	1	1
			Rationale:	U.S. EPA, 2004a	U.S. EPA, 2004a	U.S. EPA, 2004a	U.S. EPA, 2004a	U.S. EPA, 2004a

TABLE 4.2
EXPOSURE PARAMETERS FOR CHILD RECEPTOR - REASONABLE MAXIMUM EXPOSURE
Leviathan Mine Site
Alpine County, California

Exposure Parameter	Abbreviation	Units		Current and Future Recreational Visitor	Future Off-Site Rancher	Current and Future Off-Site[1] Resident	Current and Future Forager	Future Subsistence Washoe Tribe Member
Inhalation of Soil Particulates in Ambient Air								
Particulate Emission Factor[7]	PEF	m^3/kg	Value:	1.316×10^9	1.316×10^9	to be calculated[6]	1.316×10^9	1.316×10^9
			Rationale:	U.S. EPA, 2002c	U.S. EPA, 2002c	--	U.S. EPA, 2002c	U.S. EPA, 2002c
Exposure Time	ET	hours/day	Value:	24	24	24	24	24
			Rationale:	Entire day	Entire day	Entire day	Entire day	Entire day
Ingestion of Sediment								
Ingestion Rate	IRsd	mg/day	Value:	20	20		40	40
			Rationale:	VDEQ, 2016; 10% of soil ingestion rate	VDEQ, 2016; 10% of soil ingestion rate		AESE, 2005b; 10 percent of soil ingestion for child	AESE, 2005b; 10 percent of soil ingestion for child
Exposure Frequency – Wading	EFw	years	Value:	14	12		60	84
			Rationale:	Professional judgement, daily wading over a two-week vacation period (U.S. EPA, 2014)	Professional judgement: wading once per week during 12 weeks in the summer.		ATSDR, 2003; estimated time spent in vicinity of mine per year.	Professional judgment; exposure occurs daily over 12 weeks of summer.
Dermal Contact with Sediment								
Surface Area	SAsd	cm^2/event	Value:	2,900	2,900		2,900	2,900
			Rationale:	DTSC, 2014	DTSC, 2014		DTSC, 2014	DTSC, 2014
Sediment/Skin Adherence Factor	SAFsd	mg/cm^2	Value:	0.2	0.2		0.3	0.3
			Rationale:	U.S. EPA, 2004a	U.S. EPA, 2004a		U.S. EPA, 2004a; value for reed gatherer used.	U.S. EPA, 2004a; value for reed gatherer used.
Event Frequency	EVw	events/day	Value:	1	1		1	1
			Rationale:	U.S. EPA, 2004a	U.S. EPA, 2004a		U.S. EPA, 2004a	U.S. EPA, 2004a
Exposure Frequency – Wading	EFw	days/year	Value:	14	12		60	84
			Rationale:	Professional judgement, daily wading over a two-week vacation period (U.S. EPA, 2014)	Professional judgement: wading once per week during 12 weeks in the summer.		ATSDR, 2003; estimated time spent in vicinity of mine per year.	Professional judgment; exposure occurs daily over 12 weeks of summer.

Notes
1. The off-site receptors do not access the on-property study areas, but may be exposed based on transport of chemicals to these specific supplemental study areas.
2. General exposure parameters apply to all pathways except where noted.
3. Water supply is assumed to be either groundwater or surface water as appropriate to the scenario. Both groundwater and surface water on-site will be considered for the subsistence Washoe scenario. Only surface water will be considered for the recreational visitor, foraging Washoe, and River Ranch scenarios.
4. Ingestion rates may be subdivided or combined by type of wildlife once site-specific data is available.
5. Ingestion rates may be subdivided or combined by type of plant once site-specific data is available.
6. Site-specific conditions when available will be incorporated into this value.

Shading indicates an incomplete exposure pathway for a particular receptor.

Abbreviations
-- = not applicable
cm^2 = square centimeters
g = grams
h = hour
kg = kilograms
L = liters
m^3 = cubic meters
mg = milligrams
mg = micrograms

References

AESE, Inc., 2005b, Draft Washoe Tribe Provisional Reasonable Maximum Exposure Factors (RME) for the Leviathan Mine Superfund Site Risk Assessments, June 27.
Agency for Toxic Substances Disease Registry (ATSDR), 2003, Public Health Assessment Evaluation of Leviathan Mine Site, Leviathan Mine, Markleeville, Alpine County, California, U.S. Department of Health & Human Services (HHS), May 7: Report prepared by the California Department of Health Services.
Department of Toxic Substances Control (DTSC), 2014, HERO HHRA Note 1: Recommended DTSC Default Exposure Factors for Use in Risk Assessment at California Hazardous Waste Sites and Permitted Facilities. California Environmental Protection Agency.
U.S. Environmental Protection Agency (U.S. EPA), 2002c, Supplemental Guidance for Developing Soil Screening Levels for Superfund Sites, December.
U.S. Environmental Protection Agency (U.S. EPA), 2004a, Risk Assessment Guidance for Superfund, Volume 1: Human Health Evaluation Manual (Part E, Supplemental Guidance for Dermal Risk Assessment).
U.S. Environmental Protection Agency (U.S. EPA), 2011c, Exposure Factors Handbook, Volume 1, General Factors, October.
U.S. Environmental Protection Agency (U.S. EPA), 2014, Human Health Evaluation Manual, Supplemental Guidance: "Update of Standard Default Exposure Factors," Office of Emergency and Remedial Response, Washington, D.C.
Virginia Department of Environmental Quality (VDEQ), 2016, Voluntary Remediation Program - Risk Assessment Guidance.

FIGURES

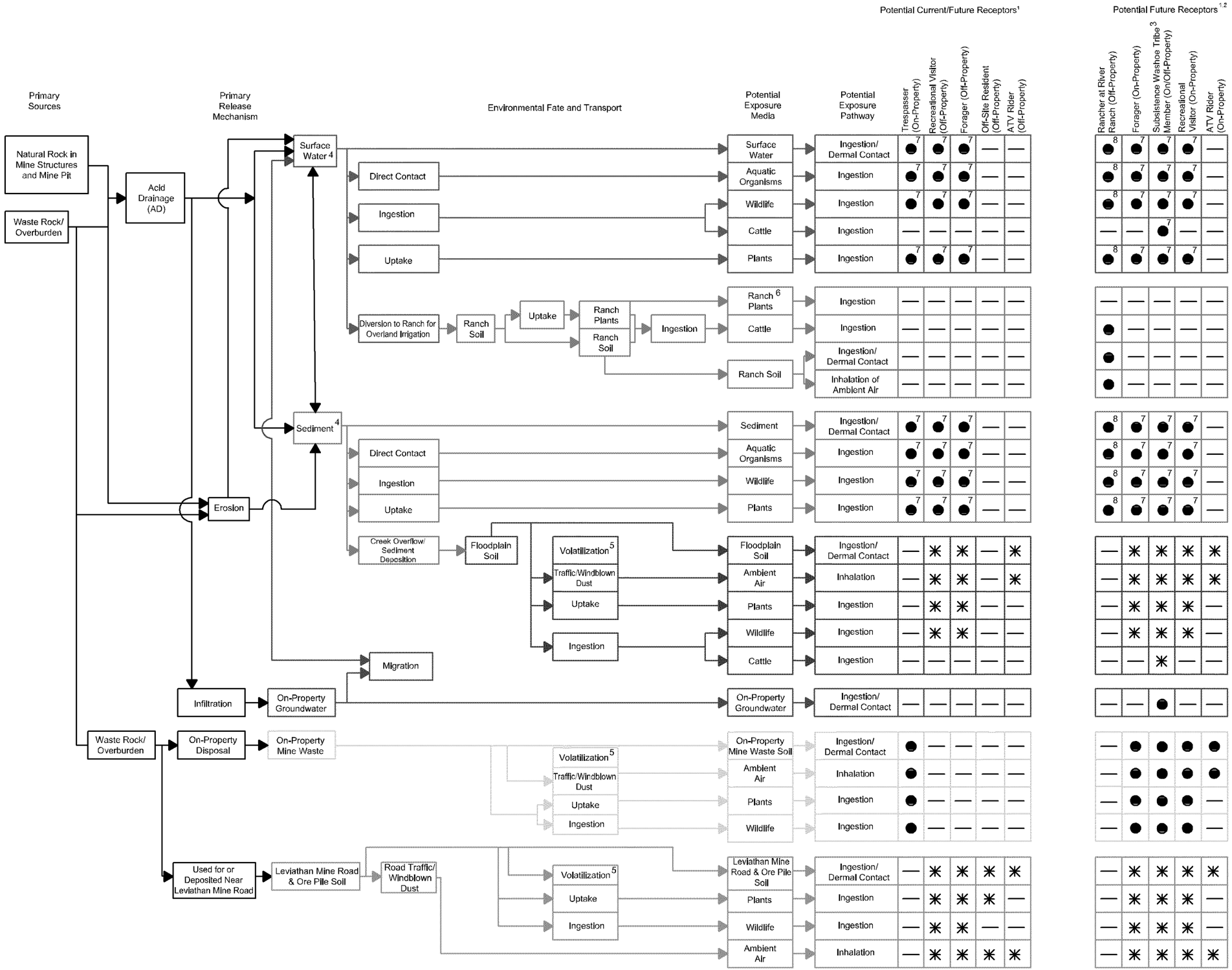

Explanation

- ● Potentially complete exposure pathway
- ✳ Potentially complete exposure pathway, pending additional data
- — Incomplete exposure pathway

Pathways related to:

- Surface Water
- River Ranch Soil
- Sediment
- Flood Plain Soil
- Groundwater
- On-Property Mine Waste
- Leviathan Mine Road & Ore Pile Soil

Notes:

1. The Leviathan Mine RI/FS activities address three separate areas. The On-property Study Areas are within the boundaries of the former mine site and are comprised of the Leviathan Creek, Aspen Creek, and Pit study areas. The Off-property Study Area is the riparian corridor along Leviathan Creek, beyond the On-property Study Areas, and Bryant Creek, which begins after the confluence of Leviathan and Mountaineer Creeks and ends at the confluence with East Fork Carson River. The Supplemental Study Areas include River Ranch, Leviathan Mine Road, the ore piles on Leviathan Mine Road, and East Fork Carson River, and will be included in the baseline human health risk assessment if the media have been impacted by the Leviathan Mine.
2. If institutional controls restricting on-property access are sufficiently documented as final remedies, these future on-property receptors may not be relevant.
3. At U.S. EPA's request, the Subsistence Washoe Tribe Member scenario is assumed to be present throughout the Leviathan Mine Study Area.
4. Surface water and sediment exposure pathways are relevant to Leviathan, Aspen and Bryant Creeks. East Fork Carson River is a supplemental study area, which will be included in the baseline human health risk assessment if it is adversely impacted by the Leviathan Mine.
5. Only one RI/FS analyte is considered volatile, mercury. Potential exposure to mercury volatilized from soil at this site is not considered significant.
6. It is assumed that plants grown for consumption at River Ranch would be grown outside the area irrigated for pasture grazing by water diverted from Bryant Creek.
7. Only applies to areas where surface water is present (e.g., not applicable to the Pit Study Area).
8. Potential exposure to surface water and sediment for the Rancher at River Ranch will be based on measurements in Bryant Creek in the vicinity of the ranch property.

HUMAN HEALTH CONCEPTUAL SITE MODEL
Leviathan Mine Site
Alpine County, California

amec foster wheeler

By: dpv | Date: 06/24/16 | Project No. 0013091

Figure 2

Plot Date: 06/24/16 - 1:02pm, Plotted by: donna.valasek
Drawing Path: P:\Project\13000s\13091 Leviathan\14000 Database_CAD\CAD\DrawingFiles\HHRA\, Drawing Name: HumanHealthSiteModel.dwg