ET 9217

RI 9217

REPORT OF INVESTIGATIONS/1988

Methods of Evaluating Explosive Reactivity of Explosive-Contaminated Solid Waste Substances

By T. S. Bajpayee and Richard J. Mainiero

BUREAU OF MINES

UNITED STATES DEPARTMENT OF THE INTERIOR

ED_001691B_00013210

Report of Investigations 9217

Methods of Evaluating Explosive Reactivity of Explosive-Contaminated Solid Waste Substances

By T. S. Bajpayee and Richard J. Mainiero

UNITED STATES DEPARTMENT OF THE INTERIOR
Donald Paul Hodel, Secretary

BUREAU OF MINES
T S Ary, Director

ED_001691B_00013210

Library of Congress Cataloging in Publication Data:

Bajpayee, T. S.
Methods of evaluating explosive reactivity of explosive-contaminated solid waste substances.

(Report of investigations / United States Department of the Interior, Bureau of Mines; 9217).

Includes bibliographical references.

Supt. of Docs. no.: I 28.23:9217.

1. Arsenals—Waste disposal—Environmental aspects—United States. 2. Hazardous wastes—Combustion—Testing. 3. Explosives—Environmental aspects—Testing. 4. Explosive ordnance disposal. I. Mainiero, Richard J. II. Title. III. Title: Explosive reactivity of explosive-contaminated solid waste substances. IV. Series: Report of investigations (United States. Bureau of Mines); 9217.

TN23.U43 [TD899.A76] 622 s [623.4'5] 88-600311

CONTENTS

	Page
Abstract	1
Introduction	2
Experimental setup and test procedure	2
Gap test	2
Internal ignition test	4
Validation tests	4
Conclusions	5

ILLUSTRATIONS

1. Bureau of Mines' gap test for solids . . . 3
2. Bureau of Mines' gap test for liquids . . . 3
3. Bureau of Mines' internal ignition test . . . 4

TABLE

1. Examples of validation tests for various reference substances . . . 5

UNIT OF MEASURE ABBREVIATIONS USED IN THIS REPORT

A	ampere	kPa	kilopascal
atm	atmosphere, standard	lb	pound
°C	degree Celsius	L/min	liter per minute
cm	centimeter	mL	milliliter
ft/s	foot per second	ohms/cm	ohms per centimeter
ft^3/h	cubic foot per hour	ohms/in	ohms per inch
g	gram	oz	ounce
g/cm^3	gram per cubic centimeter	pct	percent
in	inch	V	volt
km/s	kilometer per second		

METHODS OF EVALUATING EXPLOSIVE REACTIVITY OF EXPLOSIVE-CONTAMINATED SOLID WASTE SUBSTANCES

By T. S. Bajpayee[1] and Richard J. Mainiero[2]

ABSTRACT

The Bureau of Mines has developed test procedures and criteria for evaluating explosive reactivity of explosive-contaminated solid waste substances generated by U.S. Army ammunition plants. These substances are produced as explosive-contaminated sludge from wastewater treatment plants, residues from the burning of munitions and explosives on open ground, and residues from deactivation furnaces. The characterization of explosive reactivity is a prerequisite for disposal of such waste materials, which may be contaminated with primary explosives, propellants, or pyrotechnic materials. The Bureau has proposed two tests for this purpose. These tests were developed to evaluate the explosive reactivity as defined in Title 40, Code of Federal Regulations (CFR), part 261.23(a)(6) and (7). These are the Bureau's gap and internal ignition tests, which determine the sensitivity to shock and thermal stimuli, respectively. This report also includes gap and internal ignition reference data for typical blasting agents, high explosives, propellants, and marginally reactive substances. These reference data were used to establish test criteria. The Bureau has evaluated over 400 samples of contaminated soil, sludge, and burning residues using these two test methods.

[1]Supervisory physical scientist.
[2]Research supervisor.
Pittsburgh Research Center, U.S. Bureau of Mines, Pittsburgh, PA.

INTRODUCTION

The Bureau of Mines has conducted research to establish methods and criteria to evaluate the explosive reactivity of explosive-contaminated solid waste substances generated by U.S. Army ammunition plants. These substances are contaminated with various primary explosives, propellants, and pyrotechnic materials. The degree of explosive contamination may range from a few parts per million to 10 pct. Uniform testing methods and assessment criteria were developed to evaluate the explosive reactivity of substances generated from all three sources.

The purpose of this research initiative was to develop tests suitable for determining the properties described in 40 CFR 261 Subpart C "Characteristics of Hazardous Waste"; in particular, paragraph 261.23(a)(6) and (7), "Characteristic of Reactivity," which defines a solid waste as having the characteristic of reactivity if it has, among others, any of the following properties:

(a)(6) Capable of detonation or explosive reaction if subjected to a strong initiation source, or if heated under confinement.

(a)(7) Readily capable of detonation or explosive decomposition or reaction at standard temperature and pressure.

The Bureau is a recognized expert in the field of explosives, and is represented in many national and international organizations. At the request of the U.S. Environmental Protection Agency and the U.S. Army, the Bureau initiated research to establish testing methods and criteria for characterizing the reactivity of explosive-contaminated solid waste substances. The characterization of explosive reactivity of such substances is a prerequisite for their disposal. This research was aimed at evaluating detonability or explosive reactivity when subjected to a strong initiating source or heated under confinement. Two separate tests were developed: the Bureau's gap and internal ignition tests.

The gap test is an arrangement for determining the response of a substance to a shock stimulus under confinement. The sample is contained in a length of steel tubing and subjected to the shock stimulus from the detonation of a pentolite booster in contact with the sample. The occurrence of detonation is determined by fragmentation of the tubing, the rate of propagation of the pressure wave in the sample (using an electronic velocity probe), and the perforation of a steel plate at the end of the pipe opposite the booster.

The internal ignition test is an arrangement for determining the response of a sample to heating by internal ignition under confinement. The sample is placed in a steel pipe capped at both ends. An igniter capsule containing 20 g of FFFg particle size black powder inserted in the center of the sample is ignited. The response of the sample is observed according to various degrees of reaction (failure to ignite; partial burning; cap blown off; pipe bulged, split, or laid open; pipe fragmented; and pipe and both end caps fragmented). The fragmentation of the pipe and/or caps into more than two distinct pieces indicates explosive reactivity.

It is considered necessary to perform both tests since there are materials that are sensitive to ignition under confinement, but not to shock; there are others that are sensitive to shock, but not to ignition under confinement. This report provides a description of the two test procedures. The Bureau has tested over 400 explosive-contaminated samples using these procedures and reported the results to the respective Army ammunition plants.

The Bureau also conducted validation tests using typical blasting agents, high explosives, propellants, and marginally reactive substances. These validation tests were used to establish test criteria.

EXPERIMENTAL SETUP AND TEST PROCEDURE

GAP TEST

The apparatus for the Bureau's gap test is shown in figure 1. The test sample is contained in a cylinder 16 in (40.6 cm) long, made of 1-1/2-in-diameter schedule 80 black seamless-steel mechanical pipe. The mechanical tubing holds a 425-mL sample. A mild steel witness plate 6 in (15.24 cm) square and 0.125 in (0.32 cm) thick is mounted at the upper end of the sample tubing and separated from it by spacers of 0.062-in (0.16-cm) thickness. The bottom of the cylinder is closed with two layers of 0.003-in (0.008-cm) thick polyethylene sheet held in place with gum rubber bands and polyvinyl chloride electrical insulating tape.

There is no other gap between the pentolite booster and the test sample as used in this test. A continuous velocity of detonation[3] probe made of thin aluminum tubing with an axial resistance wire having a resistance of 7.62 ohms/in (3.0 ohms/cm) is mounted on the wall of the sample. The outer tubing of the probe is crimped against the inner wire at the lower end, forming a resistor. When this assembly is inserted in a medium that transmits a shock wave, the outer wall crushes against the inner wire as the wave moves up the tubing, shortening the effective

[3]Ribovich, J., R. W. Watson, and F. C. Gibson. Instrumented Card-Gap Test. AIAA J., v. 6, No. 7, 1968, pp. 1260-1263.

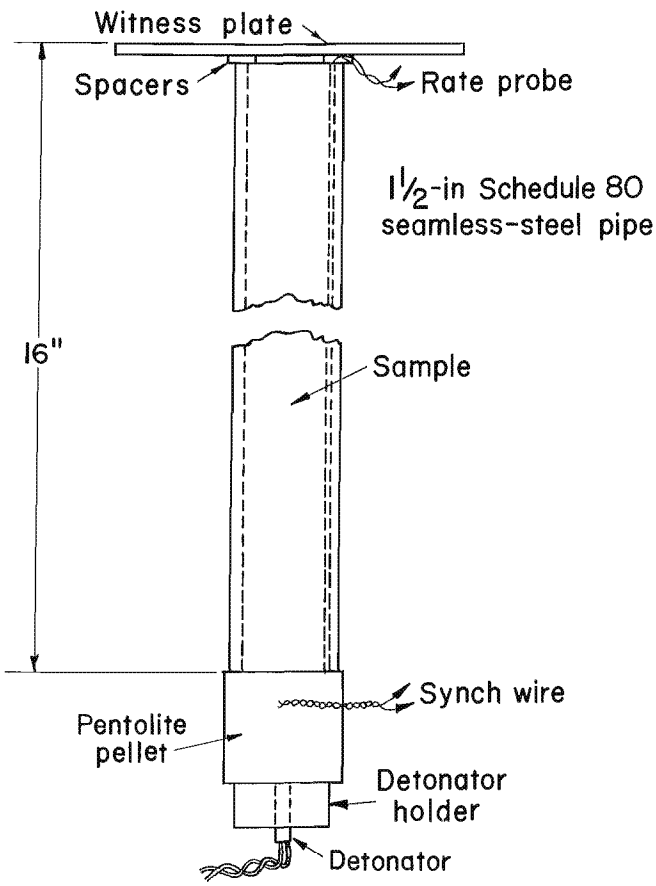

Figure 1.—Bureau of Mines' gap test for solids.

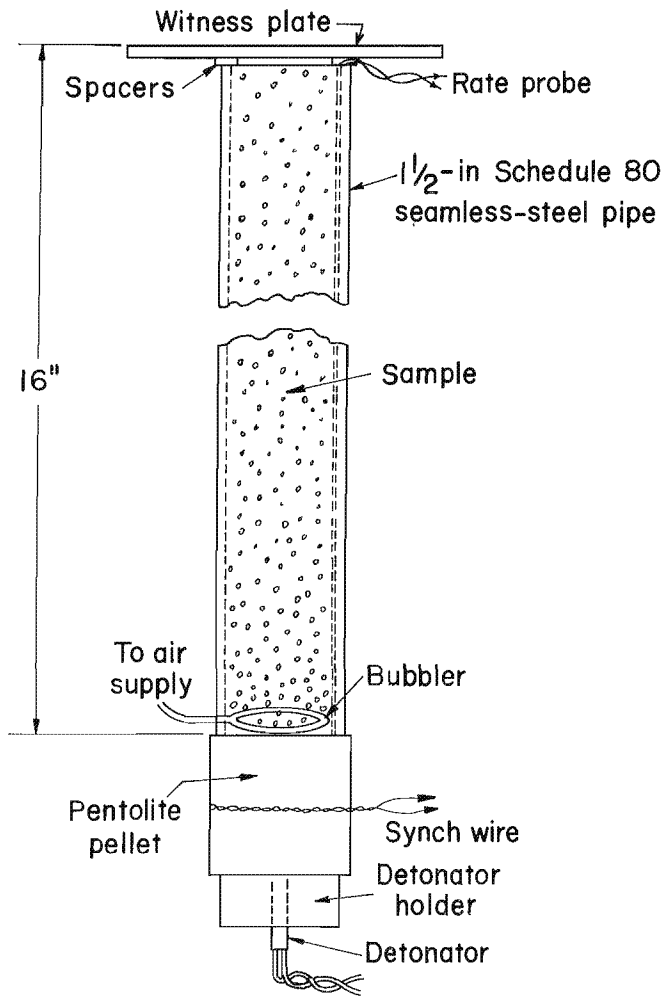

Figure 2.—Bureau of Mines' gap test for liquids.

length and changing the resistance. If a constant current (usually 0.06A) is made to flow between the outer and inner conductors, the voltage between them is proportional to the effective length and can be recorded as a function of time using an oscilloscope. The slope of the oscilloscope trace is proportional to the velocity of the shock wave.

The apparatus for the gap test for liquids is the same as that for solids except that a method of injecting bubbles into the liquid sample is provided. The experimental setup is shown in figure 2. The bubbles are injected by means of a 0.925-in (2.35-cm) diameter loop of vinyl plastic tubing located at the bottom of the sample. The tubing is the type used for medical catheterization, with an outside diameter of 0.07 in (0.18 cm) and a wall thickness of 0.016 in (0.04 cm). The loop is perforated with two rows of holes diametrically opposite each other with the holes in each row spaced 0.125 in (0.32 cm) apart. The holes are made by inserting a 0.05-in (0.13-cm) diameter needle through the wall of the tubing. Owing to the elastic nature of the tubing, the holes contract almost completely when the needle is withdrawn, so the actual hole diameter is much smaller than 0.04 in (0.1 cm). The tubing is sealed at one end of the loop with epoxy cement, and a length of the tubing from the other end of the loop is led outside to the air supply through a hole in the steel tubing, which is also sealed with epoxy cement. Air is supplied at a pressure of 0.3 to 1.0 atm (30 to 100 kPa) to obtain a flowrate of 2.5 ft^3/h (1.2 L/min). Where it is suspected that the sample may react with the steel tube, the inside of the tube is sprayed with a fluorocarbon resin coating.

The sample is loaded to the top of the steel tube. For liquid samples, adequate ullage should be allowed. Solid samples are loaded to the density attained by tapping the cylinder until further settling becomes imperceptible. The sample, at 25°±3° C, is subjected to the shock wave generated by the detonation of a pentolite (50:50 PETN:TNT) pellet, 2 in (5.08 cm) diameter and 2 in (5.08 cm) thick, having a density of 1.6 ± 0.05 g/cm^3. The pentolite pellet is butted against the bottom of the test sample and initiated with a No. 8 strength electric detonator. The detonator is held in place by a cork detonator holder. Three tests are performed on each sample.

The criteria for detonation propagation are as follows:

(a) The sample tube is fragmented along its entire length,

(b) A hole is punched in the witness plate, and

(c) A stable propagation velocity greater than 4,900 ft/s (1.5 km/s) is observed.

INTERNAL IGNITION TEST

The experimental arrangement is shown in figure 3. The sample to be tested is contained in an 18-in (45.7-cm) long by 3-in-diameter schedule 80 carbon-steel pipe with a 2.9-in (7.37-cm) ID, a wall thickness of 0.30 in (0.76 cm), and capped at both ends with 3,000 lb forged steel pipe caps. The pipe holds a 1,950-mL sample.

The sample is subjected to the thermal and pressure stimuli generated by an igniter consisting of 0.7 oz (20 g) of FFFg black powder located at the center of the sample vessel. The igniter assembly consists of a cylindrical container 0.81 in (2.06 cm) in diameter and 2.5 in (6.4 cm) long, which is made of 0.01-in (0.0254-cm) thick cellulose acetate sheet held together by two layers of nylon-filament-reinforced cellulose acetate tape. The igniter capsule contains an ignition source that is a resistance heater. The resistance heater consists of a small loop formed from a 1-in (2.54-cm) long nickel-chromium alloy resistance wire 0.012 in (0.030 cm) in diameter having a resistance of 0.343 ohm. This loop is attached to two insulated tinned copper lead wires 0.026 in (0.066 cm) in diameter. The overall wire diameter including insulation is 0.05 in (0.127 cm). The lead wires for the igniter are fed out through a 1/8-in schedule 40 seamless-steel pipe attached to one of the pipe caps.

For gelatinous samples, the substance is packed as nearly as possible to its normal shipping density. For granular samples, the substance is loaded to the density obtained by repeated tapping of the pipe against a hard surface. The igniter is fired by a current of 15 A obtained from a 20-V transformer. Three tests are performed on each sample. The sample is tested at a temperature of 25° ± 3° C.

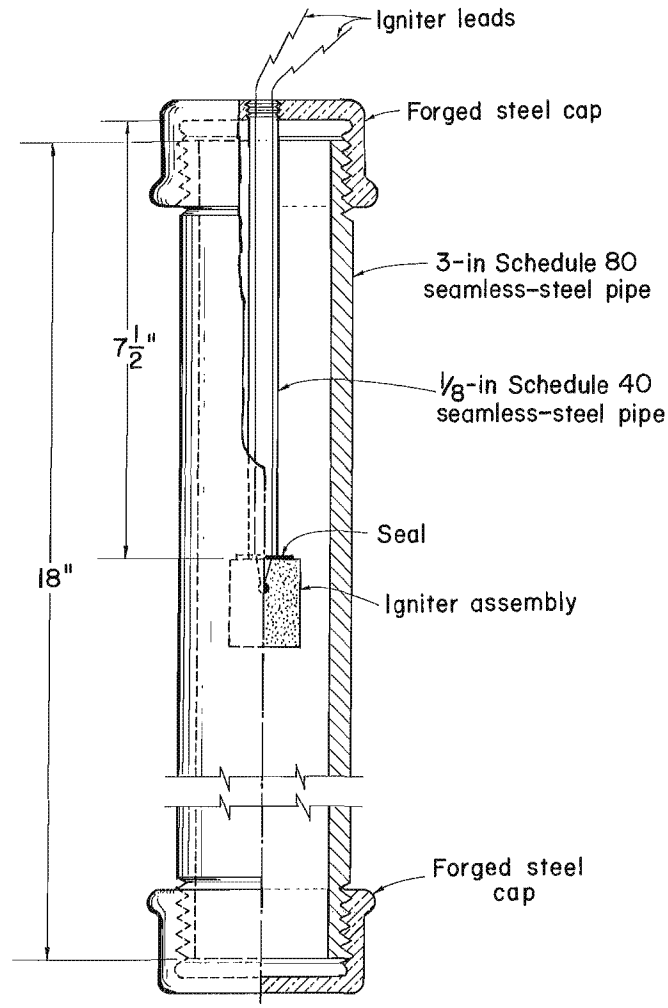

Figure 3.—Bureau of Mines' Internal Ignition test.

The criterion used for interpretation of a positive result is that either the pipe or at least one of the end caps be fragmented into at least two distinct pieces. Results in which the pipe is merely split or laid open or in which the pipe or caps are distorted to the point at which the caps are blown off are considered to be negative results.

VALIDATION TESTS

Validation of the above tests and criteria were done as part of the original effort in developing these tests. The rationale of the validation was to set the test stimulus relative to a suite of substances, all of which possess, at least theoretically, some capacity for energy-releasing chemical reaction. In addition to materials with known explosive properties, such as explosives, blasting agents, and propellants, the tests included (1) substances that are of minimal explosive hazard, but still have exhibited some potential to detonate or violently burn with sufficiently strong stimulus and confinement, and (2) substances that, while theoretically capable of releasing energy when decomposed, have not been known to burn or detonate as a result of involvement in transport or storage (such as dense-prilled ammonium nitrate and dinitrotoluene). The stimuli of the two tests were set at values that would give positive results for as many as possible of the first type of substance, while giving negative results for as many as possible of the second type of substance. Table 1 lists reference substances and the test results.

TABLE 1. - Examples of validation tests for various reference substances

Sample designation	Gap test	Internal ignition test
BLASTING AGENTS		
Ammonium nitrate–fuel oil	P	P
Water gel (TNT sensitzed)	P	P
HIGH EXPLOSIVES		
Flake TNT	P	P
Granular TNT	P	P
Nitroguanidine	P	P
PROPELLANTS (CANNON)		
Sample A	P	P
Sample B	P	P
Sample C	P	P
Sample D	P	P
Sample E	P	P
Sample F	P	P
Sample G	P	P
MARGINALLY REACTIVE		
Ammonium nitrate prills, low, medium, high density	N	N
Ammonium perchlorate:		
Coarse crystals	N	P
Fine crystals	P	P
Fine crystals, low density	P	P
MARGINALLY REACTIVE—Con.		
Benzoyl peroxide, powder	N	N
Guanidine nitrate, granular	P	N
m-Dinitrobenzene, dry, fine crystals	P	P
Nitrocellulose:		
11.5% N, 20% water	P	P
11.5% N, 30% isopropanol	P	P
13.2% N, 30% ethanol	P	P
13.3% N, dry	P	P
13.3% N, 20% water	P	P
Potassium chlorate-lactose (50:50)	P	P
Smokeless powder (small-arms)	P	P
Sodium picramate	N	P
2,4 Dinitrophenol, granular	P	N
2,4 Dinitrotoluene, granular	P	N

N Negative result. P Positive result.

CONCLUSIONS

The Bureau has evaluated over 400 samples of contaminated soil, sludge, and burning residue for the U.S. Army. Only two of these samples showed any evidence of explosive reactivity in the Bureau's gap and internal ignition tests. One of the samples showed a positive result in the internal ignition test. The sample reacted violently to the thermal stimulus. The end caps were blown off and the pipe was fragmented into more than three pieces. The other sample reacted violently in the gap and internal ignition tests. In the gap test for solids, the pipe was fragmented into small pieces, a hole of approximately 3-in diameter was punched in the witness plate, and the detonation velocity probe showed a rate in excess of 6,600 ft/s (2 km/s). However, the majority of the contaminated samples were nonreactive relative to 40 CFR 261.23(a)(6) and (7).

* U.S. GOVERNMENT PRINTING OFFICE: 611-012/00,037

INT.BU.OF MINES,PGH.,PA 28845