AUTHENTICATED
U.S. GOVERNMENT
INFORMATION
GPO

where the material is relinquished to another entity. Railroad facilities are railroad property including, but not limited to, classification and switching yards, storage facilities, and non-private sidings; however, they do not include an offeror's facility, private track, private siding, or consignee's facility. Each rail carrier must use best efforts to communicate with its shippers, consignees, and interlining partners to ensure the safety and security of shipments during all stages of transportation.

C. Because of the varying operating environments and interconnected nature of the rail system, each carrier must select and document the analysis method/model used and identify the routes to be analyzed.

D. The safety and security risk analysis must consider current data and information as well as changes that may reasonably be anticipated to occur during the analysis year. Factors to be considered in the performance of this safety and security risk analysis include:

1. Volume of hazardous material transported;
2. Rail traffic density;
3. Trip length for route;
4. Presence and characteristics of railroad facilities;
5. Track type, class, and maintenance schedule;
6. Track grade and curvature;
7. Presence or absence of signals and train control systems along the route ("dark" versus signaled territory);
8. Presence or absence of wayside hazard detectors;
9. Number and types of grade crossings;
10. Single versus double track territory;
11. Frequency and location of track turnouts;
12. Proximity to iconic targets;
13. Environmentally sensitive or significant areas;
14. Population density along the route;
15. Venues along the route (stations, events, places of congregation);
16. Emergency response capability along the route;
17. Areas of high consequence along the route, including high consequence targets as defined in § 172.820(c);
18. Presence of passenger traffic along route (shared track);
19. Speed of train operations;
20. Proximity to en-route storage or repair facilities;
21. Known threats, including any non-public threat scenarios provided by the Department of Homeland Security or the Department of Transportation for carrier use in the development of the route assessment;
22. Measures in place to address apparent safety and security risks;
23. Availability of practicable alternative routes;
24. Past incidents;
25. Overall times in transit;
26. Training and skill level of crews; and
27. Impact on rail network traffic and congestion.

[73 FR 20772, Apr. 16, 2008]

PART 173—SHIPPERS—GENERAL REQUIREMENTS FOR SHIPMENTS AND PACKAGINGS

Subpart A—General

Sec.
173.1 Purpose and scope.
173.2 Hazardous materials classes and index to hazard class definitions.
173.2a Classification of a material having more than one hazard.
173.3 Packaging and exceptions.
173.4 Small quantity exceptions.
173.4a Excepted quantities.
173.5 Agricultural operations.
173.5a Oilfield service vehicles, mechanical displacement meter provers, and roadway striping vehicles exceptions.
173.5b Portable and mobile refrigeration systems.
173.6 Materials of trade exceptions.
173.7 Government operations and materials.
173.8 Exceptions for non-specification packagings used in intrastate transportation.
173.9 Transport vehicles or freight containers containing lading which has been fumigated.
173.10 Tank car shipments.
173.11 Exceptions for shipment of light bulbs containing hazardous materials.
173.12 Exceptions for shipment of waste materials.
173.13 Exceptions for Class 3, Divisions 4.1, 4.2, 4.3, 5.1, 6.1, and Classes 8 and 9 materials.

Subpart B—Preparation of Hazardous Materials for Transportation

173.21 Forbidden materials and packages.
173.22 Shipper's responsibility.
173.22a Use of packagings authorized under special permits.
173.23 Previously authorized packaging.
173.24 General requirements for packagings and packages.
173.24a Additional general requirements for non-bulk packagings and packages.
173.24b Additional general requirements for bulk packagings.
173.25 Authorized packagings and overpacks.
173.26 Quantity limitations.
173.27 General requirements for transportation by aircraft.
173.28 Reuse, reconditioning and remanufacture of packagings.

ED_001691B_00009240

173.29 Empty packagings.
173.30 Loading and unloading of transport vehicles.
173.31 Use of tank cars.
173.32 Requirements for the use of portable tanks.
173.33 Hazardous materials in cargo tank motor vehicles.
173.34 [Reserved]
173.35 Hazardous materials in intermediate bulk containers (IBCs).
173.36 Hazardous materials in Large Packagings.
173.37 Hazardous Materials in Flexible Bulk Containers.
173.40 General packaging requirements for toxic materials packaged in cylinders.
173.41 Sampling and testing program for unrefined petroleum-based products.

Subpart C—Definitions, Classification and Packaging for Class 1

173.50 Class 1—Definitions.
173.51 Authorization to offer and transport explosives.
173.52 Classification codes and compatibility groups of explosives.
173.53 Provisions for using old classifications of explosives.
173.54 Forbidden explosives.
173.55 [Reserved]
173.56 New explosives—Definition and procedures for classification and approval.
173.57 Acceptance criteria for new explosives.
173.58 Assignment of class and division for new explosives.
173.59 Description of terms for explosives.
173.60 General packaging requirements for explosives.
173.61 Mixed packaging requirements.
173.62 Specific packaging requirements for explosives.
173.63 Packaging exceptions.
173.64 Exceptions for Division 1.3 and 1.4 fireworks.
173.65 Exceptions for Division 1.4G consumer fireworks.

Subpart D—Definitions, Classification, Packing Group Assignments and Exceptions for Hazardous Material Other Than Class 1 and Class 7

173.115 Class 2, Divisions 2.1, 2.2, and 2.3—Definitions.
173.116 Class 2—Assignment of hazard zone.
173.117–173.119 [Reserved]
173.120 Class 3—Definitions.
173.121 Class 3—Assignment of packing group.
173.124 Class 4, Divisions 4.1, 4.2 and 4.3—Definitions.
173.125 Class 4—Assignment of packing group.
173.127 Class 5, Division 5.1—Definition and assignment of packing groups.
173.128 Class 5, Division 5.2—Definitions and types.
173.129 Class 5, Division 5.2—Assignment of packing group.
173.132 Class 6, Division 6.1—Definitions.
173.133 Assignment of packing group and hazard zones for Division 6.1 materials.
173.134 Class 6, Division 6.2—Definitions and exceptions.
173.136 Class 8—Definitions.
173.137 Class 8—Assignment of packing group.
173.140 Class 9—Definitions.
173.141 Class 9—Assignment of packing group.
173.144 Other Regulated Materials (ORM)—Definitions.
173.145 Other Regulated Materials—Assignment of packing group.
173.150 Exceptions for Class 3 (flammable and combustible liquids).
173.151 Exceptions for Class 4.
173.152 Exceptions for Division 5.1 (oxidizers) and Division 5.2 (organic peroxides).
173.153 Exceptions for Division 6.1 (poisonous materials).
173.154 Exceptions for Class 8 (corrosive materials).
173.155 Exceptions for Class 9 (miscellaneous hazardous materials).
173.156 Exceptions for limited quantity and ORM.

Subpart E—Non-bulk Packaging for Hazardous Materials Other Than Class 1 and Class 7

173.158 Nitric acid.
173.159 Batteries, wet.
173.159a Exceptions for non-spillable batteries.
173.160 Bombs, smoke, non-explosive (corrosive).
173.161 Chemical kits and first aid kits.
173.162 Gallium.
173.163 Hydrogen fluoride.
173.164 Mercury (metallic and articles containing mercury).
173.165 Polyester resin kits.
173.166 Safety devices.
173.167 Consumer commodities.
173.168 Chemical oxygen generators.
173.170 Black powder for small arms.
173.171 Smokeless powder for small arms.
173.172 Aircraft hydraulic power unit fuel tank.
173.173 Paint, paint-related material, adhesives and ink and resins.
173.174 Refrigerating machines.
173.175 Permeation devices.
173.176 Capacitors.
173.181 Pyrophoric materials (liquids).
173.182 Barium azide—50 percent or more water wet.

ED_001691B_00009240

173.183 Nitrocellulose base film.
173.184 Highway or rail fusee.
173.185 Lithium batteries and cells.
173.186 Matches.
173.187 Pyrophoric solids, metals or alloys, n.o.s.
173.188 White or yellow phosphorous.
173.189 Batteries containing sodium or cells containing sodium.
173.192 Packaging for certain toxic gases in Hazard Zone A.
173.193 Bromoacetone, methyl bromide, chloropicrin and methyl bromide or methyl chloride mixtures, etc.
173.194 Gas identification sets.
173.195 Hydrogen cyanide, anhydrous, stabilized (hydrocyanic acid, aqueous solution).
173.196 Category A infectious substances.
173.197 Regulated medical waste.
173.198 Nickel carbonyl.
173.199 Category B infectious substances.
173.201 Non-bulk packagings for liquid hazardous materials in Packing Group I.
173.202 Non-bulk packagings for liquid hazardous materials in Packing Group II.
173.203 Non-bulk packagings for liquid hazardous materials in Packing Group III.
173.204 Non-bulk, non-specification packagings for certain hazardous materials.
173.205 Specification cylinders for liquid hazardous materials.
173.206 Packaging requirements for chlorosilanes.
173.211 Non-bulk packagings for solid hazardous materials in Packing Group I.
173.212 Non-bulk packagings for solid hazardous materials in Packing Group II.
173.213 Non-bulk packagings for solid hazardous materials in Packing Group III.
173.214 Packagings which require approval by the Associate Administrator.
173.216 Asbestos, blue, brown, or white.
173.217 Carbon dioxide, solid (dry ice).
173.218 Fish meal or fish scrap.
173.219 Life-saving appliances.
173.220 Internal combustion engines, self-propelled vehicles, mechanical equipment containing internal combustion engines, battery-powered equipment or machinery, fuel cell-powered equipment or machinery.
173.221 Polymeric beads, expandable and Plastic molding compound.
173.222 Dangerous good in machinery or apparatus.
173.223 Packagings for certain flammable solids.
173.224 Packaging and control and emergency temperatures for self-reactive materials.
173.225 Packaging requirements and other provisions for organic peroxides.
173.226 Materials poisonous by inhalation, Division 6.1, Packing Group I, Hazard Zone A.
173.227 Materials poisonous by inhalation, Division 6.1, Packing Group I, Hazard Zone B.
173.228 Bromine pentafluoride or bromine trifluoride.
173.229 Chloric acid solution or chlorine dioxide hydrate, frozen.
173.230 Fuel cell cartridges containing hazardous material.
173.231 Ammonium nitrate emulsion, suspension or gel.

Subpart F—Bulk Packaging for Hazardous Materials Other Than Class 1 and Class 7

173.240 Bulk packaging for certain low hazard solid materials.
173.241 Bulk packagings for certain low hazard liquid and solid materials.
173.242 Bulk packagings for certain medium hazard liquids and solids, including solids with dual hazards.
173.243 Bulk packaging for certain high hazard liquids and dual hazard materials which pose a moderate hazard.
173.244 Bulk packaging for certain pyrophoric liquids (Division 4.2), dangerous when wet (Division 4.3) materials, and poisonous liquids with inhalation hazards (Division 6.1).
173.245 Bulk packaging for extremely hazardous materials such as poisonous gases (Division 2.3).
173.247 Bulk packaging for certain elevated temperature materials.
173.249 Bromine.
173.251 Bulk packaging for ammonium nitrate emulsion, suspension, or gel.

Subpart G—Gases; Preparation and Packaging

173.300 [Reserved]
173.301 General requirements for shipment of compressed gases and other hazardous materials in cylinders, UN pressure receptacles and spherical pressure vessels.
173.301a Additional general requirements for shipment of specification cylinders.
173.301b Additional general requirements for shipment of UN pressure receptacles.
173.302 Filling of cylinders with nonliquefied (permanent) compressed gases or adsorbed gases.
173.302a Additional requirements for shipment nonliquefied (permanent) compressed gases in specification cylinders.
173.302b Additional requirements for shipment of non-liquefied (permanent) compressed gases in UN pressure receptacles.
173.302c Additional requirements for the shipment of adsorbed gases in UN pressure receptacles.
173.303 Charging of cylinders with compressed gas in solution (acetylene).
173.304 Filling of cylinders with liquefied compressed gases.

ED_001691B_00009240

173.304a Additional requirements for shipment of liquefied compressed gases in specification cylinders.
173.304b Additional requirements for shipment of liquefied compressed gases in UN pressure receptacles.
173.305 Charging of cylinders with a mixture of compressed gas and other material.
173.306 Limited quantities of compressed gases.
173.307 Exceptions for compressed gases.
173.308 Cigarette lighter or other similar device charged with fuel.
173.309 Fire extinguishers.
173.310 Exceptions for radiation detectors.
173.311 Metal hydride storage systems.
173.312 Requirements for shipment of MEGCs.
173.313 UN Portable Tank Table for Liquefied Compressed Gases and Chemical Under Pressure.
173.314 Compressed gases in tank cars and multi-unit tank cars.
173.315 Compressed gases in cargo tanks and portable tanks.
173.316 Cryogenic liquids in cylinders.
173.318 Cryogenic liquids in cargo tanks.
173.319 Cryogenic liquids in tank cars.
173.320 Cryogenic liquids; exceptions.
173.321 Ethylamine.
173.322 Ethyl chloride.
173.323 Ethylene oxide.
173.334 Organic phosphates mixed with compressed gas.
173.335 Chemical under pressure n.o.s.
173.336 Nitrogen dioxide, liquefied, or dinitrogen tetroxide, liquefied.
173.337 Nitric oxide.
173.338 Tungsten hexafluoride.
173.340 Tear gas devices.

Subpart H [Reserved]

Subpart I—Class 7 (Radioactive) Materials

173.401 Scope.
173.403 Definitions.
173.410 General design requirements.
173.411 Industrial packages.
173.412 Additional design requirements for Type A packages.
173.413 Requirements for Type B packages.
173.415 Authorized Type A packages.
173.416 Authorized Type B packages.
173.417 Authorized fissile materials packages.
173.418 Authorized packages—pyrophoric Class 7 (radioactive) materials.
173.419 Authorized packages—oxidizing Class 7 (radioactive) materials.
173.420 Uranium hexafluoride (fissile, fissile excepted and non-fissile).
173.421 Excepted packages for limited quantities of Class 7 (radioactive) materials.
173.422 Additional requirements for excepted packages containing Class 7 (radioactive) materials.
173.423 Requirements for multiple hazard limited quantity Class 7 (radioactive) materials.
173.424 Excepted packages for radioactive instruments and articles.
173.425 Table of activity limits—excepted quantities and articles.
173.426 Excepted packages for articles containing natural uranium or thorium.
173.427 Transport requirements for low specific activity (LSA) Class 7 (radioactive) material and surface contaminated objects (SCO).
173.428 Empty Class 7 (radioactive) materials packaging.
173.431 Activity limits for Type A and Type B packages.
173.433 Requirements for determining basic radionuclide values, and for the listing of radionuclides on shipping papers and labels.
173.434 Activity-mass relationships for uranium and natural thorium.
173.435 Table of A_1 and A_2 values for radionuclides.
173.436 Exempt material activity concentrations and exempt consignment activity limits for radionuclides.
173.441 Radiation level limitations and exclusive use provisions.
173.442 Thermal limitations.
173.443 Contamination control.
173.447 Storage incident to transportation—general requirements.
173.448 General transportation requirements.
173.453 Fissile materials—exceptions.
173.457 Transportation of fissile material packages—specific requirements.
173.459 Mixing of fissile material packages with non-fissile or fissile-excepted material packages.
173.461 Demonstration of compliance with tests.
173.462 Preparation of specimens for testing.
173.465 Type A packaging tests.
173.466 Additional tests for Type A packagings designed for liquids and gases.
173.467 Tests for demonstrating the ability of Type B and fissile materials packagings to withstand accident conditions in transportation.
173.468 Test for LSA-III material.
173.469 Tests for special form Class 7 (radioactive) materials.
173.471 Requirements for U.S. Nuclear Regulatory Commission approved packages.
173.472 Requirements for exporting DOT Specification Type B and fissile packages.
173.473 Requirements for foreign-made packages.
173.474 Quality control for construction of packaging.
173.475 Quality control requirements prior to each shipment of Class 7 (radioactive) materials.

ED_001691B_00009240

173.476 Approval of special form Class 7 (radioactive) materials.
173.477 Approval of packagings containing greater than 0.1 kg of non-fissile or fissile-excepted uranium hexafluoride.

Subparts J–O [Reserved]

APPENDIX A TO PART 173 [RESERVED]
APPENDIX B TO PART 173—PROCEDURE FOR TESTING CHEMICAL COMPATIBILITY AND RATE OF PERMEATION IN PLASTIC PACKAGING AND RECEPTACLES
APPENDIX C TO PART 173—PROCEDURE FOR BASE-LEVEL VIBRATION TESTING
APPENDIX D TO PART 173—TEST METHODS FOR DYNAMITE (EXPLOSIVE, BLASTING, TYPE A)
APPENDIXES E–G TO PART 173 [RESERVED]
APPENDIX H TO PART 173—METHOD OF TESTING FOR SUSTAINED COMBUSTIBILITY

AUTHORITY: 49 U.S.C. 5101–5128, 44701; 49 CFR 1.81, 1.96 and 1.97.

EDITORIAL NOTE: Nomenclature changes to part 173 appear at 70 FR 56098, Sept. 23, 2005.

Subpart A—General

§ 173.1 Purpose and scope.

(a) This part includes:

(1) Definitions of hazardous materials for transportation purposes;

(2) Requirements to be observed in preparing hazardous materials for shipment by air, highway, rail, or water, or any combination thereof; and

(3) Inspection, testing, and retesting responsibilities for persons who retest, recondition, maintain, repair and rebuild containers used or intended for use in the transportation of hazardous materials.

(b) A shipment of hazardous materials that is not prepared in accordance with this subchapter may not be offered for transportation by air, highway, rail, or water. It is the responsibility of each hazmat employer subject to the requirements of this subchapter to ensure that each hazmat employee is trained in accordance with the requirements prescribed in this subchapter. It is the duty of each person who offers hazardous materials for transportation to instruct each of his officers, agents, and employees having any responsibility for preparing hazardous materials for shipment as to applicable regulations in this subchapter.

(c) In general, the Hazardous Materials Regulations (HMR) contained in this subchapter are based on the UN Recommendations and are consistent with international regulations issued by the International Civil Aviation Organization (ICAO Technical Instructions) and the International Maritime Organization (IMDG Code). However, the HMR are not consistent in all respects with the UN Recommendations, the ICAO Technical Instructions or the IMDG Code, and compliance with the HMR will not guarantee acceptance by regulatory bodies outside of the United States.

[Amdt. 173–94, 41 FR 16062, Apr. 15, 1976, as amended by Amdt. 173–100, 41 FR 40476, Sept. 20, 1976; Amdt. 173–161, 48 FR 2655, Jan. 20, 1983; Amdt. 173–224, 55 FR 52606, Dec. 21, 1990; Amdt. 173–231, 57 FR 20953, May 15, 1992; 64 FR 10776, Mar. 5, 1999; 68 FR 61941, Oct. 30, 2003]

§ 173.2 Hazardous materials classes and index to hazard class definitions.

The hazard class of a hazardous material is indicated either by its class (or division) number, its class name, or by the letters "ORM-D". The following table lists class numbers, division numbers, class or division names and those sections of this subchapter which contain definitions for classifying hazardous materials, including forbidden materials.

Class No.	Division No. (if any)	Name of class or division	49 CFR reference for definitions
None		Forbidden materials	173.21
None		Forbidden explosives	173.54
1	1.1	Explosives (with a mass explosion hazard)	173.50
1	1.2	Explosives (with a projection hazard)	173.50
1	1.3	Explosives (with predominately a fire hazard)	173.50
1	1.4	Explosives (with no significant blast hazard)	173.50
1	1.5	Very insensitive explosives; blasting agents	173.50
1	1.6	Extremely insensitive detonating substances	173.50
2	2.1	Flammable gas	173.115
2	2.2	Non-flammable compressed gas	173.115
2	2.3	Poisonous gas	173.115

ED_001691B_00009240

Class No.	Division No. (if any)	Name of class or division	49 CFR reference for definitions
3		Flammable and combustible liquid	173.120
4	4.1	Flammable solid	173.124
4	4.2	Spontaneously combustible material	173.124
4	4.3	Dangerous when wet material	173.124
5	5.1	Oxidizer	173.127
5	5.2	Organic peroxide	173.128
6	6.1	Poisonous materials	173.132
6	6.2	Infectious substance (Etiologic agent)	173.134
7		Radioactive material	173.403
8		Corrosive material	173.136
9		Miscellaneous hazardous material	173.140
None		Other regulated material: ORM-D	173.144

[Amdt. 173–224, 55 FR 52606, Dec. 21, 1990, as amended at 57 FR 45460, Oct. 1, 1992; Amdt. 173–234, 58 FR 51531, Oct. 1, 1993]

§ 173.2a Classification of a material having more than one hazard.

(a) *Classification of a material having more than one hazard.* Except as provided in paragraph (c) of this section, a material not specifically listed in the § 172.101 table that meets the definition of more than one hazard class or division as defined in this part, shall be classed according to the highest applicable hazard class of the following hazard classes, which are listed in descending order of hazard:

(1) Class 7 (radioactive materials, other than limited quantities; and shipments of UN 3507, Uranium hexafluoride, radioactive material, excepted package)

(2) Division 2.3 (poisonous gases).

(3) Division 2.1 (flammable gases).

(4) Division 2.2 (nonflammable gases).

(5) Division 6.1 (poisonous liquids), Packing Group I, poisonous-by-inhalation only.

(6) A material that meets the definition of a pyrophoric material in § 173.124(b)(1) of this subchapter (Division 4.2).

(7) A material that meets the definition of a self-reactive material in § 173.124(a)(2) of this subchapter (Division 4.1).

(8) Class 3 (flammable liquids), Class 8 (corrosive materials), Division 4.1 (flammable solids), Division 4.2 (spontaneously combustible materials), Division 4.3 (dangerous when wet materials), Division 5.1 (oxidizers) or Division 6.1 (poisonous liquids or solids other than Packing Group I, poisonous-by-inhalation). The hazard class and packing group for a material meeting more than one of these hazards shall be determined using the precedence table in paragraph (b) of this section.

(9) Combustible liquids.

(10) Class 9 (miscellaneous hazardous materials).

(b) *Precedence of hazard table for Classes 3 and 8 and Divisions 4.1, 4.2, 4.3, 5.1 and 6.1.* The following table ranks those materials that meet the definition of Classes 3 and 8 and Divisions 4.1, 4.2, 4.3, 5.1 and 6.1:

PRECEDENCE OF HAZARD TABLE

[Hazard class or division and packing group]

	4.2	4.3	5.1 I[1]	5.1 II[1]	5.1 III[1]	6.1, I dermal	6.1, I oral	6.1 II	6.1 III	8, I liquid	8, I solid	8, II liquid	8, II solid	8, III liquid	8, III solid
3 I[2]		4.3				3	3	3	3	3	(3)	3	(3)	3	(3)
3 II[2]		4.3				3	3	3	3	8	(3)	3	(3)	3	(3)
3 III[2]		4.3				6.1	6.1	6.1	3[4]	8	(3)	8	(3)	3	(3)
4.1 II[2]	4.2	4.3	5.1	4.1	4.1	6.1	6.1	4.1	4.1	(3)	8	(3)	4.1	(3)	4.1
4.1 III[2]	4.2	4.3	5.1	4.1	4.1	6.1	6.1	6.1	4.1	(3)	8	(3)	8	(3)	4.1
4.2 II		4.3	5.1	4.2	4.2	6.1	6.1	4.2	4.2	8	8	4.2	4.2	4.2	4.2
4.2 III		4.3	5.1	5.1	4.2	6.1	6.1	6.1	4.2	8	8	8	8	4.2	4.2
4.3 I			5.1	4.3	4.3	6.1	4.3	4.3	4.3	4.3	4.3	4.3	4.3	4.3	4.3
4.3 II			5.1	4.3	4.3	6.1	4.3	4.3	4.3	8	8	4.3	4.3	4.3	4.3
4.3 III			5.1	5.1	4.3	6.1	6.1	6.1	4.3	8	8	8	8	4.3	4.3

ED_001691B_00009240

PRECEDENCE OF HAZARD TABLE—Continued

[Hazard class or division and packing group]

	4.2	4.3	5.1 I [1]	5.1 II [1]	5.1 III [1]	6.1, I dermal	6.1, I oral	6.1 II	6.1 III	8, I liquid	8, I solid	8, II liquid	8, II solid	8, III liquid	8, III solid
5.1 I [1]						5.1	5.1	5.1	5.1	5.1	5.1	5.1	5.1	5.1	5.1
5.1 II [1]						6.1	5.1	5.1	5.1	8	8	5.1	5.1	5.1	5.1
5.1 III [1]						6.1	6.1	6.1	5.1	8	8	8	8	5.1	5.1
6.1 I, Dermal										8	6.1	6.1	6.1	6.1	6.1
6.1 I, Oral										8	6.1	6.1	6.1	6.1	6.1
6.1 II, Inhalation										8	6.1	6.1	6.1	6.1	6.1
6.1 II, Dermal										8	6.1	8	6.1	6.1	6.1
6.1 II, Oral										8	8	8	6.1	6.1	6.1
6.1 III										8	8	8	8	8	8

[1] See § 173.127.
[2] Materials of Division 4.1 other than self-reactive substances and solid desensitized explosives, and materials of Class 3 other than liquid desensitized explosives.
[3] Denotes an impossible combination.
[4] For pesticides only, where a material has the hazards of Class 3, Packing Group III, and Division 6.1, Packing Group III, the primary hazard is Division 6.1, Packing Group III.

NOTE 1: The most stringent packing group assigned to a hazard of the material takes precedence over other packing groups; for example, a material meeting Class 3 PG II and Division 6.1 PG I (oral toxicity) is classified as Class 3 PG I.

NOTE 2: A material which meets the definition of Class 8 and has an inhalation toxicity by dusts and mists which meets criteria for Packing Group I specified in § 173.133(a)(1) must be classed as Division 6.1 if the oral or dermal toxicity meets criteria for Packing Group I or II. If the oral or dermal toxicity meets criteria for Packing Group III or less, the material must be classed as Class 8.

(c) The following materials are not subject to the provisions of paragraph (a) of this section because of their unique properties:

(1) A Class 1 (explosive) material that meets any other hazard class or division as defined in this part shall be assigned a division in Class 1. Class 1 materials shall be classed and approved in accordance with § 173.56 of this part;

(2) A Division 5.2 (organic peroxide) material that meets the definition of any other hazard class or division as defined in this part, shall be classed as Division 5.2;

(3) A Division 6.2 (infectious substance) material that also meets the definition of another hazard class or division, other than Class 7, or that also is a limited quantity Class 7 material, shall be classed as Division 6.2;

(4) A material that meets the definition of a wetted explosive in § 173.124(a)(1) of this subchapter (Division 4.1). Wetted explosives are either specifically listed in the § 172.101 table or are approved by the Associate Administrator (see § 173.124(a)(1) of this subchapter); and

(5) A limited quantity of a Class 7 (radioactive) material that meets the definition for more than one hazard class or division shall be classed in accordance with § 173.423.

[Amdt. 173–224, 55 FR 52606, Dec. 21, 1990, as amended at 56 FR 66264, Dec. 20, 1991; Amdt. 173–241, 59 FR 67490, Dec. 29, 1994; Amdt. 173–247, 60 FR 48787, Sept. 20, 1995; Amdt. 173–244, 60 FR 50307, Sept. 28, 1995; 64 FR 10776, Mar. 5, 1999; 66 FR 33426, June 21, 2001; 66 FR 45182, 45379, Aug. 28, 2001; 68 FR 45032, July 31, 2003; 80 FR 1151, Jan. 8, 2015]

§ 173.3 Packaging and exceptions.

(a) The packaging of hazardous materials for transportation by air, highway, rail, or water must be as specified in this part. Methods of manufacture, packing, and storage of hazardous materials, that affect safety in transportation, must be open to inspection by a duly authorized representative of the initial carrier or of the Department. Methods of manufacture and related functions necessary for completion of a DOT specification or U.N. standard packaging must be open to inspection by a representative of the Department.

(b) The regulations setting forth packaging requirements for a specific material apply to all modes of transportation unless otherwise stated, or unless exceptions from packaging requirements are authorized.

(c) *Salvage drums.* Packages of hazardous materials that are damaged, defective, or leaking; packages found to be not conforming to the requirements

ED_001691B_00009240

of this subchapter after having been placed in transportation; and, hazardous materials that have spilled or leaked may be placed in a metal or plastic removable head salvage drum that is compatible with the lading and shipped for repackaging or disposal under the following conditions:

(1) Except as provided in paragraph (c)(7) of this section, the drum must be a UN 1A2, 1B2, 1N2 or 1H2 tested and marked for Packing Group III or higher performance standards for liquids or solids and a leakproofness test of 20 kPa (3 psig). Alternatively, a drum manufactured and marked prior to October 1, 1993 as a salvage drum, in accordance with the provisions of this section in effect on September 30, 1991, is authorized. Capacity of the drum may not exceed 450 L (119 gallons).

(2) Each drum shall be provided when necessary with sufficient cushioning and absorption material to prevent excessive shifting of the damaged package and to eliminate the presence of any free liquid at the time the salvage drum is closed. All cushioning and absorbent material used in the drum must be compatible with the hazardous material.

(3) Each salvage packaging must be marked with the proper shipping name of the hazardous material inside the packaging and the name and address of the consignee. In addition, the packaging must be marked "SALVAGE". The lettering of the marking must be at least 12 mm (0.5 inches) high.

(i) *Transitional exception.* A marking in conformance with the requirements of this paragraph in effect on December 31, 2014, may continue to be used until December 31, 2016.

(ii) For domestic transportation, a packaging marked prior to January 1, 2017 and in conformance with the requirements of this paragraph in effect on December 31, 2014, may continue in service until the end of its useful life.

(4) Each drum shall be labeled as prescribed for the respective material.

(5) The shipper shall prepare shipping papers in accordance with subpart C of part 172 of this subchapter.

(6) The overpack requirements of § 173.25 do not apply to drums used in accordance with this paragraph.

(7) A salvage packaging marked "T" in accordance with applicable provisions in the UN Recommendations may be used.

(d) *Salvage cylinders.* Cylinders of hazardous materials that are damaged or leaking may be overpacked in a non-DOT specification full opening hinged head or fully removable head steel salvage cylinder under the following conditions:

(1) Only a cylinder containing a Division 2.1, 2.2, 2.3, 3, 6.1, or a Class 8 material may be overpacked in a salvage cylinder. A cylinder containing acetylene may not be overpacked in a salvage cylinder.

(2) Each salvage cylinder—

(i) Must be designed, constructed and marked in accordance with Section VIII, Division I of the ASME Code (IBR, *see* § 171.7 of this subchapter) with a minimum design margin of 4 to 1. Salvage cylinders may not be equipped with a pressure relief device. Damaged cylinders must be securely positioned in the salvage cylinder to prevent excessive movement. The overpack requirements of § 173.25 of this part do not apply to salvage cylinders used in accordance with this section.

(ii) Must have a maximum water capacity of 450 L (119 gallons).

(iii) Except for liquefied nitrous oxide and carbon dioxide, contents of the damaged or leaking cylinder must be limited in pressure and volume so that if totally discharged into the salvage cylinder, the pressure in the salvage cylinder will not exceed ¾ of the MAWP at 55 °C (131 °F).

(iv) Must have gaskets, valves and fittings that are compatible with the hazardous materials contained within.

(3) Each salvage cylinder must be plainly and durably marked. Unless otherwise specified, the markings below must be in the same area on any portion of the upper end:

(i) The proper shipping name of the hazardous material contained inside the packaging;

(ii) The name and address of the consignee or consignor;

(iii) The name and address or registered symbol of the manufacturer; and

ED_001691B_00009240

(iv) The word "SALVAGE" in letters at least 12 mm (0.5 inches) high on opposite sides near the middle of the cylinder; stamping on the sidewall is not authorized.

(A) *Transitional exception.* A marking in conformance with the requirements of this paragraph in effect on December 31, 2014, may continue to be used until December 31, 2016.

(B) For domestic transportation, a packaging marked prior to January 1, 2017 and in conformance with the requirements of this paragraph in effect on December 31, 2014, may continue in service until the end of its useful life.

(4) Each salvage cylinder must be labeled for the hazardous material contained inside the packaging.

(5) The shipper must prepare shipping papers in accordance with subpart C of part 172 of this subchapter.

(6) Transportation is authorized by motor vehicle and cargo vessel only.

(7) Each salvage cylinder must be cleaned and purged after each use.

(8) In addition to the training requirements of §§172.700 through 172.704 of this subchapter, a person who loads, unloads or transports a salvage cylinder must be trained in handling, loading and unloading the salvage cylinder.

(9) Cylinder Requalification: At least once every five years, each cylinder must be visually inspected (internally and externally) in accordance with CGA Pamphlet C–6 (IBR, *see* §171.7 of this subchapter) and pressure tested. A minimum test pressure of at least 1½ times MAWP must be maintained for at least 30 seconds. The cylinder must be examined under test pressure and removed from service if a leak or a defect is found.

(i) The retest and inspection must be performed by a person familiar with salvage cylinders and trained and experienced in the use of the inspection and testing equipment.

(ii) Each salvage cylinder that is successfully requalified must be durably and legibly marked with the word "Tested" followed by the requalification date (month/year), *e.g.*, "Tested 9/04." The marking must be in letters and numbers at least 12 mm (0.5 inches) high. The requalification marking may be placed on any portion of the upper end of the cylinder near the marking required in (d)(3) of this section or on a metal plate permanently secured to the cylinder. Stamping on the cylinder sidewall is not authorized.

(10) Record retention: The owner of each salvage cylinder or his authorized agent shall retain a record of the most recent visual inspection and pressure test until the salvage cylinder is requalified. The records must be made available to a DOT representative upon request.

(e) *Emergency transportation of DOT 3A480 or 3AA480 cylinders and DOT 106A500 multi-unit tank car tanks.* (1) A DOT 3A480 or DOT 3AA480 cylinder containing chlorine or sulphur dioxide that has developed a leak in a valve or fusible plug may be repaired temporarily by trained personnel using a Chlorine Institute Kit "A" (IBR, *see* §171.7 of this subchapter). The repaired cylinder is authorized to be transported by private or contract carrier one time, one way, from the point of discovery to a proper facility for discharge and examination.

(2) A DOT 106A500 multi-unit tank car tank containing chlorine or sulphur dioxide that has developed a leak in the valve or fusible plug may be temporarily repaired by trained personnel using a Chlorine Institute Kit "B" (IBR, *see* §171.7 of this subchapter). The repaired tank is authorized to be transported by private or contract carrier one time, one way, from the point of discovery to a proper facility for discharge and examination.

(3) Training for personnel making the repairs in paragraphs (d)(1) and (d)(2) of this section must include:

(i) Proper use of the devices and tools in the applicable kits;

(ii) Use of respiratory equipment and all other safety equipment; and

(iii) Knowledge of the properties of chlorine and sulphur dioxide.

(4) Packagings repaired with "A" or "B" kits must be properly blocked and braced to ensure the packagings are secured in the transport vehicle.

(f) *Large salvage packagings.* Except for transportation by air, packages of hazardous materials that are damaged, defective, or leaking; packages found to be not conforming to the requirements of this subchapter after having

ED_001691B_00009240

been placed in transportation; and, hazardous materials that have spilled or leaked may be placed in a large salvage packaging that is compatible with the lading and shipped for repackaging or disposal under the following conditions:

(1) Large salvage packagings must be tested and marked in accordance with part 178, subparts P and Q of this subchapter at the Packing Group II or higher performance standards for large packagings intended for the transport of solids or inner packagings, except as follows:

(i) The test substance used in performing the tests shall be water, and the large salvage packagings must be filled to not less than 98 percent of their maximum capacity; and

(ii) Large salvage packagings must have been successfully subjected to a leakproofness test of 30 kPa (4.4 psig).

(2) Each large salvage packaging shall be provided when necessary with sufficient cushioning and absorption material to prevent excessive shifting of the contents and to eliminate the presence of any free liquid at the time the packaging is closed. All cushioning and absorbent material used in the large salvage packaging must be compatible with the hazardous material.

(3) Each large salvage packaging must be marked with the proper shipping name of the hazardous material inside the packaging and the name and address of the consignee. In addition, the packaging must be marked "SALVAGE". The lettering of the marking must be at least 12 mm (0.5 inches) high.

(4) Each large salvage packaging shall be labeled as prescribed for the respective material.

(5) The shipper shall prepare shipping papers in accordance with subpart C of part 172 of this subchapter.

(6) The overpack requirements of §173.25 do not apply to large salvage packagings used in accordance with this paragraph.

[Amdt. 173–224, 55 FR 52607, Dec. 21, 1990, as amended at 56 FR 66265, Dec. 20, 1991; Amdt. 173–234, 58 FR 51531, Oct. 1, 1993; Amdt. 173–261, 62 FR 24719, May 6, 1997; 66 FR 45380, Aug. 28, 2001; 68 FR 48569, Aug. 14, 2003; 69 FR 76154, Dec. 20, 2004; 70 FR 3307, Jan. 24, 2005; 68 FR 61941, Oct. 30, 2003; 70 FR 34397, June 14, 2005; 70 FR 56098, Sept. 23, 2005; 75 FR 27213, May 14, 2010; 76 FR 43528, July 20, 2011; 80 FR 1151, Jan. 8, 2015]

§ 173.4 Small quantities for highway and rail.

(a) When transported domestically by highway or rail in conformance with this section, quantities of Division 2.2 (except aerosols with no subsidiary hazard), Class 3, Division 4.1, Division 4.2 (PG II and III), Division 4.3 (PG II and III), Division 5.1, Division 5.2, Division 6.1, Class 7, Class 8, and Class 9 materials are not subject to any other requirements when—

(1) The maximum quantity of material per inner receptacle or article is limited to—

(i) Thirty (30) mL (1 ounce) for authorized liquids, other than Division 6.1, Packing Group I, Hazard Zone A or B materials;

(ii) Thirty (30) g (1 ounce) for authorized solid materials;

(iii) One (1) g (0.04 ounce) for authorized materials meeting the definition of a Division 6.1, Packing Group I, Hazard Zone A or B material; and

(iv) [Reserved]

(v) Thirty (30) mL water capacity (1.8 cubic inches) for authorized Division 2.2 materials.

(2) With the exception of temperature sensing devices, each inner receptacle:

(i) Is not liquid-full at 55 °C (131 °F), and

(ii) Is constructed of plastic having a minimum thickness of no less than 0.2 mm (0.008 inch), or earthenware, glass, or metal;

(3) Each inner receptacle with a removable closure has its closure held securely in place with wire, tape, or other positive means;

(4) Unless equivalent cushioning and absorbent material surrounds the inside packaging, each inner receptacle is securely packed in an inside packaging with cushioning and absorbent material that:

ED_001691B_00009240

(i) Will not react chemically with the material, and

(ii) Is capable of absorbing the entire contents (if a liquid) of the receptacle;

(5) The inside packaging is securely packed in a strong outer packaging;

(6) The completed package, as demonstrated by prototype testing, is capable of sustaining—

(i) Each of the following free drops made from a height of 1.8 m (5.9 feet) directly onto a solid unyielding surface without breakage or leakage from any inner receptacle and without a substantial reduction in the effectiveness of the package:

(A) One drop flat on bottom;

(B) One drop flat on top;

(C) One drop flat on the long side;

(D) One drop flat on the short side; and

(E) One drop on a corner at the junction of three intersecting edges; and

(ii) A compressive load as specified in §178.606(c) of this subchapter.

NOTE TO PARAGRAPH (a)(6): Each of the tests in paragraph (a)(6) of this section may be performed on a different but identical package; *i.e.*, all tests need not be performed on the same package.

(7) Placement of the material in the package or packing different materials in the package does not result in a violation of §173.21;

(8) The gross mass of the completed package does not exceed 29 kg (64 pounds);

(9) The package is not opened or otherwise altered until it is no longer in commerce; and

(10) The shipper certifies conformance with this section by marking the outside of the package with the statement "This package conforms to 49 CFR 173.4 for domestic highway or rail transport only."

(b) A package containing a Class 7 (radioactive) material also must conform to the requirements of §173.421(a)(1) through (a)(5), §173.424(a) through (g), or §173.426(a) through (c) as applicable.

(c) Packages which contain a Class 2 (other than those authorized in paragraph (a) of this section), Division 4.2 (PG I), or Division 4.3 (PG I) material conforming to paragraphs (a)(1) through (10) of this section may be offered for transportation or transported if approved by the Associate Administrator.

(d) Lithium batteries and cells are not eligible for the exceptions provided in this section.

[74 FR 2253, Jan. 14, 2009, as amended at 75 FR 5393, Feb. 2, 2010; 76 FR 3368, Jan. 19, 2011; 79 FR 40610, July 11, 2014]

§ 173.4a Excepted quantities.

(a) Excepted quantities of materials other than articles transported in accordance with this section are not subject to any additional requirements of this subchapter except for:

(1) The shipper's responsibilities to properly class their material in accordance with §173.22 of this subchapter;

(2) Sections 171.15 and 171.16 of this subchapter pertaining to the reporting of incidents; and

(3) For a Class 7 (Radioactive) material the requirements for an excepted package.

(4) Packagings for which retention of liquid is a basic function must be capable of withstanding without leakage the pressure differential specified in §173.27(c) of this part.

(b) *Authorized materials.* Only materials authorized for transport aboard passenger aircraft and appropriately classed within one of the following hazard classes or divisions may be transported in accordance with this section:

(1) Division 2.2 material with no subsidiary hazard. An aerosol is not included as authorized Division 2.2 material;

(2) Class 3 materials;

(3) Class 4 (PG II and III) materials except for self-reactive materials;

(4) Division 5.1 (PG II and III);

(5) Division 5.2 materials only when contained in a chemical kit, first aid kit or a polyester resin kit;

(6) Division 6.1, other than PG I, Hazard Zone A or B material;

(7) Class 7, Radioactive material in excepted packages

(8) Class 8 (PG II and III), except for UN2803 (Gallium) and UN2809 (Mercury); and

(9) Class 9, except for UN1845 (Carbon dioxide, solid or Dry ice), and lithium batteries and cells.

(c) *Inner packaging limits.* The maximum quantity of hazardous materials in each inner packaging is limited to:

ED_001691B_00009240

(1) For toxic material with a Division 6.1 primary or subsidiary hazard, PG I or II—

(i) 1 g (0.04 ounce) for solids; or

(ii) 1 mL (0.03 ounce) for liquids;

(2) 30 g (1 ounce) or 30 mL (1 ounce) for solids or liquids other than those covered in paragraph (c)(1) of this section; and

(3) For gases a water capacity of 30 mL (1.8 cubic inches) or less.

(d) *Outer packaging aggregate quantity limits.* The maximum aggregate quantity of hazardous material contained in each outer packaging must not exceed the limits provided in the following paragraphs. For outer packagings containing more than one hazardous material, the aggregate quantity of hazardous material must not exceed the lowest permitted maximum aggregate quantity. The limits are as follows:

(1) For other than a Division 2.2 or Division 5.2 material:

(i) Packing Group I—300 g (0.66 pounds) for solids or 300 mL (0.08 gallons) for liquids;

(ii) Packing Group II—500 g (1.1 pounds) for solids or 500 mL (0.1 gallons) for liquids;

(iii) Packing Group III—1 kg (2.2 pounds) for solids or 1 L (0.2 gallons) for liquids;

(2) For Division 2.2 material, 1 L (61 cubic inches); or

(3) For Division 5.2 material, 500 g (1.1 pounds) for solids or 500 mL (0.1 gallons) for liquids.

(e) *Packaging materials.* Packagings used for the transport of excepted quantities must meet the following:

(1) Each inner receptacle must be constructed of plastic, or of glass, porcelain, stoneware, earthenware or metal. When used for liquid hazardous materials, plastic inner packagings must have a thickness of not less than 0.2 mm (0.008 inch).

(2) Each inner packaging with a removable closure must have its closure held securely in place with wire, tape or other positive means. Each inner receptacle having a neck with molded screw threads must have a leak proof, threaded type cap. The closure must not react chemically with the material.

(3) Each inner packaging must be securely packed in an intermediate packaging with cushioning material in such a way that, under normal conditions of transport, it cannot break, be punctured or leak its contents. The intermediate packaging must completely contain the contents in case of breakage or leakage, regardless of package orientation. For liquid hazardous materials, the intermediate packaging must contain sufficient absorbent material that:

(i) Will absorb the entire contents of the inner packaging.

(ii) Will not react dangerously with the material or reduce the integrity or function of the packaging materials.

(iii) The absorbent material may be the cushioning material.

(4) The intermediate packaging must be securely packed in a strong, rigid outer packaging.

(5) Placement of the material in the package or packing different materials in the package must not result in a violation of § 173.21.

(6) Each package must be of such a size that there is adequate space to apply all necessary markings.

(7) The package is not opened or otherwise altered until it is no longer in commerce.

(8) Overpacks may be used and may also contain packages of hazardous material or other materials not subject to the HMR subject to the requirements of § 173.25.

(f) *Package tests.* The completed package as prepared for transport, with inner packagings filled to not less than 95% of their capacity for solids or 98% for liquids, must be capable of withstanding, as demonstrated by testing which is appropriately documented, without breakage or leakage of any inner packaging and without significant reduction in effectiveness:

(1) Drops onto a solid unyielding surface from a height of 1.8 m (5.9 feet):

(i) Where the sample is in the shape of a box, it must be dropped in each of the following orientations:

(A) One drop flat on the bottom;

(B) One drop flat on the top;

(C) One drop flat on the longest side;

(D) One drop flat on the shortest side; and

(E) One drop on a corner at the junction of three intersecting edges.

ED_001691B_00009240

(ii) Where the sample is in the shape of a drum, it must be dropped in each of the following orientations:

(A) One drop diagonally on the top chime, with the center of gravity directly above the point of impact;

(B) One drop diagonally on the base chime; and

(C) One drop flat on the side.

(2) A compressive load as specified in § 178.606(c) of this subchapter. Each of the tests in this paragraph (f) of this section may be performed on a different but identical package; that is, all tests need not be performed on the same package.

(g) *Marking.* Excepted quantities of hazardous materials packaged, marked, and otherwise offered and transported in accordance with this section must be durably and legibly marked with the following marking:

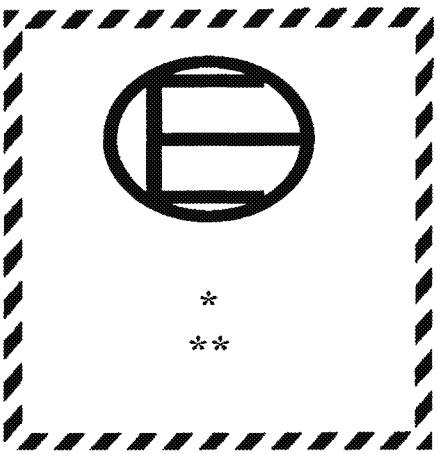

(1) The "*" must be replaced by the primary hazard class, or when assigned, the division of each of the hazardous materials contained in the package. The "**" must be replaced by the name of the shipper or consignee if not shown elsewhere on the package.

(2) The marking must be durable and clearly visible and in the form of a square. The hatching must be of the same color, black or red on white or a suitable contrasting background. The minimum dimensions must not be less than 100 mm (3.9 inches) by 100 mm (3.9 inches) as measured from the outside of the hatching forming the border. Where dimensions are not specified, all features shall be in approximate proportion to those shown.

(i) *Transitional exception*—A marking in conformance with the requirements of this paragraph in effect on December 31, 2014, may continue to be used until December 31, 2016.

(ii) For domestic transportation, a packaging marked prior to January 1, 2017 and in conformance with the requirements of this paragraph in effect on December 31, 2014, may continue in service until the end of its useful life.

(3) When packages of excepted quantities are contained in an overpack, and the package marking required by this section is not visible inside the overpack, the excepted quantities marking must also be placed on the overpack. Additionally, an overpack containing packages of excepted quantities is not required to be marked with the word "OVERPACK."

(h) *Documentation.* (1) For transportation by highway or rail, no shipping paper is required.

(2) For transport by air, a shipping paper is not required, except that, if a document such as an air waybill accompanies a shipment, the document must include the statement "Dangerous Goods in Excepted Quantities" and indicate the number of packages.

(3) For transport by vessel, a shipping paper is required and must include the statement "Dangerous Goods in Excepted Quantities" and indicate the number of packages.

(i) *Training.* Each person who offers or transports excepted quantities of hazardous materials must know about the requirements of this section.

(j) *Restrictions.* Hazardous material packaged in accordance with this section may not be carried in checked or carry-on baggage.

[74 FR 2254, Jan. 14, 2009, as amended at 75 FR 72, Jan. 4, 2010; 76 FR 3368, Jan. 19, 2011; 80 FR 1152, Jan. 8, 2015]

§ 173.4b De minimis exceptions.

(a) Packing Group II and III materials in Class 3, Division 4.1, Division 4.2, Division 4.3, Division 5.1, Division 6.1, Class 8, and Class 9 do not meet the definition of a hazardous material in § 171.8 of this subchapter when packaged in accordance with this section

ED_001691B_00009240

and, therefore, are not subject to the requirements of this subchapter.

(1) The maximum quantity of material per inner receptacle or article is limited to—

(i) One (1) mL (0.03 ounce) for authorized liquids; and

(ii) One (1) g (0.04 ounce) for authorized solid materials;

(2) Each inner receptacle with a removable closure has its closure held securely in place with wire, tape, or other positive means;

(3) Unless equivalent cushioning and absorbent material surrounds the inside packaging, each inner receptacle is securely packed in an inside packaging with cushioning and absorbent material that:

(i) Will not react chemically with the material, and

(ii) Is capable of absorbing the entire contents (if a liquid) of the receptacle;

(4) The inside packaging is securely packed in a strong outer packaging;

(5) The completed package is capable of sustaining—

(i) Each of the following free drops made from a height of 1.8 m (5.9 feet) directly onto a solid unyielding surface without breakage or leakage from any inner receptacle and without a substantial reduction in the effectiveness of the package:

(A) One drop flat on bottom;

(B) One drop flat on top;

(C) One drop flat on the long side;

(D) One drop flat on the short side; and

(E) One drop on a corner at the junction of three intersecting edges; and

(ii) A compressive load as specified in §178.606(c) of this subchapter. Each of the tests in this paragraph (a)(5) may be performed on a different but identical package; that is, all tests need not be performed on the same package.

(6) Placement of the material in the package or packing different materials in the package does not result in a violation of §173.21;

(7) The aggregate quantity of hazardous material per package does not exceed 100 g (0.22 pounds) for solids or 100 mL (3.38 ounces) for liquids;

(8) The gross mass of the completed package does not exceed 29 kg (64 pounds);

(9) The package is not opened or otherwise altered until it is no longer in commerce; and

(10) For transportation by aircraft:

(i) The hazardous material is authorized to be carried aboard passenger-carrying aircraft in Column 9A of the §172.101 Hazardous Materials Table; and

(ii) Material packed in accordance with this section may not be carried in checked or carry-on baggage.

(b) Non-infectious specimens, such as specimens of mammals, birds, amphibians, reptiles, fish, insects and other invertebrates containing small quantities of Ethanol (UN1170), Formaldehyde solution, flammable (UN1198), Alcohols, n.o.s. (UN1987) and Isopropanol (UN1219) are not subject to the requirements of this subchapter provided the following packaging, marking and documentation provisions, as applicable, are met:

(1) The specimens are:

(i) Wrapped in a paper towel or cheesecloth moistened with alcohol or an alcohol solution and placed in a plastic bag that is heat-sealed. Any free liquid in the bag must not exceed 30 mL; or

(ii) Placed in vials or other rigid containers with no more than 30 mL of alcohol or alcohol solution. The containers are placed in a plastic bag that is heat-sealed;

(2) The bagged specimens are placed in another plastic bag with sufficient absorbent material to absorb the entire liquid contents inside the primary receptacle. The outer plastic bag is then heat-sealed;

(3) The completed bag is placed in a strong outer packaging with sufficient cushioning material that conforms to subpart B of part 173;

(4) The aggregate net quantity of flammable liquid in one outer packaging may not exceed 1 L; and

(5) The outer package must be legibly marked "Scientific research specimens, 49 CFR 173.4b applies."

(6) *Documentation.* (i) For transportation by highway or rail, no shipping paper is required.

(ii) For transport by air, a shipping paper is not required, except that, if a document such as an air waybill accompanies a shipment of specimens

ED_001691B_00009240

containing hazardous materials excepted under the terms of this section, the document must include the statement "Scientific research specimens, 49 CFR 173.4b applies" and the number of packages indicated.

(iii) For transport by vessel, a shipping paper is not required; however, the Dangerous Cargo Manifest must include the statement "Scientific research specimens, 49 CFR 173.4b applies" and the number of packages indicated. Vessel stowage is the same as for hazardous materials in excepted quantities.

(7) *Training.* Each person who offers or transports excepted quantities of hazardous materials must know about the requirements of this section.

(8) *Restrictions.* Except as provided in § 175.10, for transportation by aircraft, hazardous material packaged in accordance with this section may not be carried in checked or carry-on baggage by a passenger or crew member.

[74 FR 2255, Jan. 14, 2009, as amended at 75 FR 5393, Feb. 2, 2010; 76 FR 3368, Jan. 19, 2011; 78 FR 1073, Jan. 7, 2013]

§ 173.5 Agricultural operations.

(a) For other than a Class 2 material, the transportation of an agricultural product over local roads between fields of the same farm is excepted from the requirements of this subchapter. A Class 2 material transported over local roads between fields of the same farm is excepted from subparts G and H of part 172 of this subchapter. In either instance, transportation of the hazardous material is subject to the following conditions:

(1) It is transported by a farmer who is an intrastate private motor carrier; and

(2) The movement of the agricultural product conforms to requirements of the State in which it is transported and is specifically authorized by a State statute or regulation in effect before October 1, 1998.

(b) The transportation of an agricultural product to or from a farm, within 150 miles of the farm, is excepted from the requirements in subparts G and H of part 172 of this subchapter and from the specific packaging requirements of this subchapter when:

(1) It is transported by a farmer who is an intrastate private motor carrier;

(2) The total amount of agricultural product being transported on a single motor vehicle does not exceed:

(i) 7,300 kg (16,094 lbs.) of ammonium nitrate fertilizer properly classed as Division 5.1, PG III, in a bulk packaging, or

(ii) 1900 L (502 gallons) for liquids or gases, or 2,300 kg (5,070 lbs.) for solids, of any other agricultural product;

(3) The movement and packaging of the agricultural product conform to the requirements of the State in which it is transported and are specifically authorized by a State statute or regulation in effect before October 1, 1998; and

(4) Each person having any responsibility for transporting the agricultural product or preparing the agricultural product for shipment has been instructed in the applicable requirements of this subchapter.

(c) Formulated liquid agricultural products in specification packagings of 220 L (58 gallons) capacity, or less, with closures manifolded to a closed mixing system and equipped with positive dry disconnect devices may be transported by a private motor carrier between a final distribution point and an ultimate point of application or for loading aboard an airplane for aerial application.

(d) *Moveable fuel storage tenders.* A non-DOT specification cargo tank motor vehicle may be used to transport Liquefied petroleum gas, UN1075, including Propane, UN1978, as moveable fuel storage tender used exclusively for agricultural purposes when operated by a private carrier under the following conditions:

(1) The cargo tank must have a minimum design pressure of 250 psig.

(2) The cargo tank must meet the requirements of the HMR in effect at the time of its manufacture and must be marked accordingly. For questions regarding these requirements, contact PHMSA by either:

(i) Telephone (800) 467–4922 or (202) 366–4488 (local); or

(ii) By electronic mail (e-mail) to: *infocntr@dot.gov.*

(3) The cargo tank must have a water capacity of 1,200 gallons or less.

ED_001691B_00009240

(4) The cargo tank must conform to applicable requirements in National Fire Protection Association (NFPA) 58, Liquefied Petroleum Gas Code (IBR, see § 171.7 of this subchapter).

(5) The cargo tank must be securely mounted on a motor vehicle.

(6) The cargo tank must be filled in accordance with § 173.315(b) for liquefied petroleum gas.

(7) The cargo tank must be painted white, aluminum, or other light-reflecting color.

(8) Transportation of the filled moveable fuel storage tender is limited to movements over local roads between fields using the shortest practical distance.

(9) Transportation of the moveable fuel storage tender between its point of use and a liquefied petroleum gas distribution facility is authorized only if the cargo tank contains no more than five percent of its water capacity. A movable fuel storage tender may only be filled at the consumer's premises or point of use.

(e) *Liquid soil pesticide fumigants.* MC 306 and DOT 406 cargo tank motor vehicles and DOT 57 portable tanks may be used to transport liquid soil pesticide fumigants, Pesticides, liquid, toxic, flammable, n.o.s., *flash point not less than 23 degrees C*, 6.1, UN2903, PG II, exclusively for agricultural operations by a private motor carrier between a bulk loading facility and a farm (including between farms). However, transportation is not to exceed 150 miles between the loading facility and the farm, and not more than five days are permitted for intermediate stops for temporary storage. Additionally, transport is permitted only under the following conditions:

(1) *Cargo tanks.* MC 306 and DOT 406 cargo tank motor vehicles must:

(i) Meet qualification and maintenance requirements (including periodic testing and inspection) in accordance with subpart E of part 180 of this subchapter;

(ii) Conform to the pressure relief system requirements specified in § 173.243(b)(1);

(iii) For MC 306 cargo tanks, be equipped with stop-valves capable of being remotely closed by manual and mechanical means; and

(iv) For DOT 406 cargo tanks, conform to the bottom outlet requirements specified in § 173.243(b)(2).

(2) *Portable tanks.* DOT 57 portable tanks must—

(i) Be constructed of stainless steel; and

(ii) Meet qualification and maintenance requirements of subpart G of part 180 of this subchapter.

(f) See § 173.315(m) pertaining to nurse tanks of anhydrous ammonia.

(g) See § 173.6 pertaining to materials of trade.

(h) See § 172.800(b) pertaining to security plans.

[Amdt. 173–259, 62 FR 1215, Jan. 8, 1997, as amended by Amdt. 173–262, 62 FR 49566, Sept. 22, 1997; Amdt. 173–259, 63 FR 8142, Feb. 18, 1998; 65 FR 50460, Aug. 18, 2000; 70 FR 73165, Dec. 9, 2005; 73 FR 4717, Jan. 28, 2008; 76 FR 5491, Feb. 1, 2011]

§ 173.5a Oilfield service vehicles, mechanical displacement meter provers, and roadway striping vehicles exceptions.

(a) *Oilfield service vehicles.* Notwithstanding § 173.29 of this subchapter, a cargo tank motor vehicle used in oilfield servicing operations is not subject to the specification requirements of this subchapter provided—

(1) The cargo tank and equipment contains only residual amounts (*i.e.*, it is emptied so far as practicable) of a flammable liquid alone or in combination with water,

(2) No flame producing device is operated during transportation, and

(3) The proper shipping name is preceded by "RESIDUE: LAST CONTAINED * * * " on the shipping paper for each movement on a public highway.

(b) *Mechanical displacement meter provers.* (1) A mechanical displacement meter prover, as defined in § 171.8 of this subchapter, permanently mounted on a truck chassis or trailer and transported by motor vehicle is excepted from the specification packaging requirements in part 178 of this subchapter provided it—

(i) Contains only the residue of a Division 2.1 (flammable gas) or Class 3 (flammable liquid) material. For liquids, the meter prover must be drained to not exceed 10% of its capacity or, to the extent that draining of the meter

ED_001691B_00009240

prover is impracticable, to the maximum extent practicable. For gases, the meter prover must not exceed 25% of the marked pressure rating;

(ii) Has a water capacity of 3,785 L (1,000 gallons) or less;

(iii) Is designed and constructed in accordance with chapters II, III, IV, V and VI of ASME Standard B31.4 (IBR, see § 171.7 of this subchapter);

(iv) Is marked with the MAWP determined from the pipe component with the lowest pressure rating; and

(v) Is equipped with rear-end protection as prescribed in § 178.337–10(c) of this subchapter and 49 CFR 393.86 of the Federal Motor Carrier Safety Regulations.

(2) The description on the shipping paper for a meter prover containing the residue of a hazardous material must include the phrase "RESIDUE: LAST CONTAINED * * * " before the basic description.

(3) *Periodic test and inspection.* (i) Each meter prover must be externally visually inspected once a year. The external visual inspection must include at a minimum: checking for leakage, defective fittings and welds, defective closures, significant dents and other defects or abnormalities which indicate a potential or actual weakness that could render the meter prover unsafe for transportation; and

(ii) Each meter prover must be pressure tested once every 5 years at not less than 75% of design pressure. The pressure must be held for a period of time sufficiently long to assure detection of leaks, but in no case less than 5 minutes.

(4) In addition to the training requirements in subpart H, the person who performs the visual inspection or pressure test and/or signs the inspection report must have the knowledge and ability to perform them as required by this section.

(5) A meter prover that fails the periodic test and inspection must be rejected and removed from hazardous materials service unless the meter prover is adequately repaired, and thereafter, a successful test is conducted in accordance with the requirements of this section.

(6) Prior to any repair work, the meter prover must be emptied of any hazardous material. A meter prover containing flammable lading must be purged.

(7) Each meter prover successfully completing the external visual inspection and the pressure test must be marked with the test date (month/year), and the type of test or inspection as follows:

(i) V for external visual inspection; and

(ii) P for pressure test.

The marking must be on the side of a tank or the largest piping component in letters 32 mm (1.25 inches) high on a contrasting background.

(8) The owner must retain a record of the most recent external visual inspection and pressure test until the next test or inspection of the same type is successfully completed. The test or inspection report must include the following:

(i) Serial number or other meter prover identifier;

(ii) Type of test or inspection performed;

(iii) Test date (month/year);

(iv) Location of defects found, if any, and method used to repair each defect;

(v) Name and address of person performing the test or inspection;

(vi) Disposition statement, such as "Meter Prover returned to service" or "Meter Prover removed from service".

(c) *Roadway striping.* In addition to conformance with all other applicable requirements of this subchapter, non-DOT specification cargo tanks used for roadway striping are authorized provided all the following conditions in this paragraph (c) are met.

(1) *Authorized materials.* Only the hazardous materials listed in the table below may be transported in roadway striping vehicles. Cargo tanks may not be filled to a capacity that would be greater than liquid full at 130 °F.

HAZARDOUS MATERIALS DESCRIPTION

Proper shipping name	Hazard class/division	Identification number	Packing group
Adhesives, *containing a flammable liquid*	3	UN1133	II

ED_001691B_00009240

HAZARDOUS MATERIALS DESCRIPTION—Continued

Proper shipping name	Hazard class/ division	Identification number	Packing group
Paint *including paint, lacquer, enamel, stain, shellac solution, varnish, polish, liquid filler, and liquid lacquer base.*	3	UN1263	II
Paint related material *including paint thinning drying, removing, or reducing compound.*	3	UN1263	II
Flammable liquids, n.o.s. [a]	3	UN1993	II
Gasoline	3	UN1203	II
Acetone [b]	3	UN1090	II
Dichloromethane [b]	6.1	UN1593	III
Ethyl methyl ketone or Methyl ethyl ketone [b]	3	UN1193	II
Ethyl acetate [b]	3	UN1173	II
Methanol [b]	3	UN1230	II
Organic peroxide type E, liquid (Dibenzoyl peroxide) [c]	5.2	UN3107	II
Petroleum distillates, n.o.s. *or* Petroleum products, n.o.s. [b]	3	UN1268	III
1,1,1-Trichloroethane [b]	6.1	UN2831	III
Toluene [b]	3	UN1294	II
Xylenes [b]	3	UN1307	II, III
Environmentally hazardous substance, liquid, n.o.s. [c]	9	UN3082	III
Corrosive liquid, basic, organic, n.o.s. [c]	8	UN3267	III
Corrosive liquids, n.o.s. [c]	8	UN1760	III
Elevated temperature liquid, n.o.s., *at or above 100 °C and below its flash point (including molten metals, molten salts, etc.)* [d].	9	UN3257	III

[a]: Adhesive containing ethyl acetate.
[b]: Solvent.
[c]: Catalyst.
[d]: Thermoplastic material non-hazardous at room temperature.

(2) *Cargo tank requirements.* Each non-DOT specification cargo tank used for roadway striping must be securely bolted to a motor vehicle and must—

(i) Be constructed and certified in conformance with the HMR in effect at the time of its manufacture and must be marked accordingly. For questions regarding these requirements, contact PHMSA by either: (1) Telephone (800) 467–4922 or (202) 366–4488 (local); or (2) by electronic mail (e-mail) to: *infocntr@dot.gov*;

(ii) Have a minimum design pressure of 100 psig;

(iii) Have a maximum capacity of 500 gallons;

(iv) For solvents and organic peroxides, the cargo tank may not contain more than 50 gallons;

(v) Be given an external visual inspection prior to each use to ensure that it has not been damaged on the previous trip;

(vi) Be retested and reinspected in accordance with § 180.407(c) of this subchapter as specified for an MC 331 cargo tank motor vehicle; and

(vii) Be securely mounted to a motor vehicle in accordance with the securement provisions prescribed in §§ 393.100 through 393.106 of this title.

(3) *Test records.* The owner or operator of the roadway striping vehicle must maintain hydrostatic test records in accordance with § 180.417(b) and must make those records available to any representative of the Department of Transportation upon request.

(4) *Marking.* A non-DOT specification cargo tank used for roadway striping must be plainly marked on both sides near the middle in letters at least two inches in height on a contrasting background "ROADWAY STRIPING".

(5) *Operational controls.* A non-DOT specification cargo tank used for roadway striping may not be pressurized when the motor vehicle is traveling to and from job sites. Additionally, the distance traveled by a non-DOT specification cargo tank used for roadway striping may not exceed 750 miles. Thermoplastic resin may only be heated during roadway striping operations.

[70 FR 3308, Jan. 24, 2005, as amended at 75 FR 27213, May 14, 2010; 76 FR 5492, Feb. 1, 2011]

§ 173.5b Portable and mobile refrigeration systems.

This section authorizes the highway transportation of residual amounts of Division 2.2 refrigerant gases or anhydrous ammonia contained in non-specification pressure vessels that are components of refrigeration systems, which

ED_001691B_00009240

may or may not be permanently mounted to a transport vehicle, used for agricultural operations. These refrigeration systems are used at field sites to cool (pre-cool) produce before the produce is loaded into trucks or railcars for market or used to supplement stationary refrigeration systems during peak harvest times. The components of these refrigeration systems are commonly known as vacuum tubes, accumulators, refrigeration units, ice makers, pressure coolers, or evaporators.

(a) *General packaging requirements.* Each non-specification pressure vessel must conform to the following:

(1) Each pressure vessel must be designed, manufactured, and maintained in accordance with applicable requirements of the ASME Code (IBR, see § 171.7 of this subchapter).

(2) Except as authorized in this section, each pressure vessel and associated piping must be rated at a maximum allowable work pressure (MAWP) of 250 psig. The pressure in these components may not exceed MAWP.

(3) Any part of the piping or pressure vessel separated from another component of the refrigeration system by means of a valve, blank flange, or other device must be equipped with a pressure relief valve set at MAWP. All lines that must be disconnected for transportation purposes must be closed by means of a cap, plug or blank flange, and valves at the end of disconnected lines must be tightly closed.

(4) The aggregate total volumetric capacity of components within the refrigeration system authorized for highway transportation in accordance with this section may not exceed 2,500 gallons per vehicle.

(5) Each pressure vessel and associated piping containing anhydrous ammonia must conform to the following:

(i) Piping with a diameter of 2 inches or more must conform to ASTM A 53 Schedule 40 or ASTM A106 Schedule 40 (IBR, see § 171.7 of this subchapter).

(ii) Piping with a diameter of less than 2 inches must conform to ASTM A 53 Schedule 80 or ASTM A 106 Schedule 80 (IBR, see § 171.7 of this subchapter).

(iii) The words "Inhalation Hazard" must be marked as required in special provision 13 in § 172.102 of this subchapter and, when practicable, within 24 inches of the placard.

(b) *Refrigeration systems placed into service prior to June 1, 1991.* (1) For refrigeration systems placed into service prior to June 1, 1991, each pressure vessel and associated piping for the condensing line ("high side") must be rated at an MAWP of not less than 250 psig. Each pressure vessel and associated piping for the evaporating line ("low side") must be rated at an MAWP of not less than 150 psig, except that each pressure vessel or associated piping that will contain refrigerant gas during transportation must be rated at an MAWP of not less than 250 psig. During transportation, pressure in the components that are part of the evaporating line may not exceed 150 psig.

(2) Each pressure vessel and associated piping that is part of the evaporating line must be marked "LOW SIDE" in a permanent and clearly visible manner. The evaporating line must have a pressure gauge with corresponding temperature markings mounted so as to be easily readable when standing on the ground. The gauge must be permanently marked or tagged "SATURATION GAUGE".

(3) Each pressure vessel and associated piping with an MAWP of 250 psig or greater containing liquid anhydrous ammonia must be isolated using appropriate means from piping and components marked "LOW SIDE".

(4) Liquid lading is only authorized in system components with a rated MAWP of not less than 250 psig.

(5) Prior to transportation, each pressure vessel and associated piping with a rated MAWP of less than 250 psig must be relieved of enough gaseous lading to ensure that the MAWP is not exceeded at transport temperatures up to 54 °C (130 °F).

(6) Refrigeration systems placed into service prior to June 1, 1991, may continue in service until October 1, 2017.

(c) Prior to transportation over public highways, each pressure vessel and associated piping must be drained of refrigerant gas or liquid anhydrous ammonia to the extent practicable. Drained contents must be recovered in conformance with all applicable environmental regulations. Residual liquid

ED_001691B_00009240

anhydrous ammonia in each component may not exceed one percent of the component's total volumetric capacity or 10 gallons, whichever is less.

(d) *System inspection and testing.* (1) Each refrigeration system authorized under this section must be visually inspected every year. The visual inspection must include items listed in § 180.407(d)(2) of this subchapter applicable to refrigeration systems. A certificate of the annual visual inspection must be dated and signed by the person performing the inspection and must contain that person's company affiliation. The certificate must remain at the equipment owner's office.

(2) Each refrigeration system authorized under this section must be proof pressure tested every two years beginning with the initial pressure test performed after manufacture. Additional pressure tests must be performed after any modification, repair or damage to a part of the system pressurized with refrigerant gas. System test pressures may not be less than one-and-one-half (1.50) times the rated MAWP of the system component or piping.

(3) Pressure relief valves must be successfully tested every two years at the MAWP for the components or piping to which they are attached. Pressure relief valves may be replaced and marked every 5 years with valves certified at the appropriate MAWP, in which case the valves need not be tested every two years. Valves that do not pass the test must be repaired or replaced.

(e) *Test markings and reports.* (1) Evidence of testing specified in paragraph (d) of this section must be marked on the right forward side of the refrigeration system with 2 inch high letters indicating type of last test (V = visual; P = pressure: hydrostatic or pneumatic) and the month/year in which it was performed. Reports and all of the requirements for records of inspections including markings must be completed as specified in part 180.

(2) Pressure relief valves must be durably marked with either the date of last test, set-pressure and testing company or the date of last replacement, set-pressure, and certifying company, as applicable.

[74 FR 16142, Apr. 9, 2009]

§ 173.6 Materials of trade exceptions.

When transported by motor vehicle in conformance with this section, a material of trade (see § 171.8 of this subchapter) is not subject to any other requirements of this subchapter besides those set forth or referenced in this section.

(a) *Materials and amounts.* A material of trade is limited to the following:

(1) A Class 3, 8, 9, Division 4.1, 5.1, 5.2, 6.1, or ORM-D material contained in a packaging having a gross mass or capacity not over—

(i) 0.5 kg (1 pound) or 0.5 L (1 pint) for a Packing Group I material;

(ii) 30 kg (66 pounds) or 30 L (8 gallons) for a Packing Group II, Packing Group III, or ORM-D material;

(iii) 1500 L (400 gallons) for a diluted mixture, not to exceed 2 percent concentration, of a Class 9 material.

(2) A Division 2.1 or 2.2 material in a cylinder with a gross weight not over 100 kg (220 pounds), in a Dewar flask meeting the requirements of § 173.320, or a permanently mounted tank manufactured to the ASME Code of not more than 70 gallon water capacity for a non-liquefied Division 2.2 material with no subsidiary hazard.

(3) A Division 4.3 material in Packing Group II or III contained in a packaging having a gross capacity not exceeding 30 mL (1 ounce).

(4) A Division 6.2 material, other than a Category A infectious substance, contained in human or animal samples (including, but not limited to, secreta, excreta, blood and its components, tissue and tissue fluids, and body parts) being transported for research, diagnosis, investigational activities, or disease treatment or prevention, or is a biological product or regulated medical waste. The material must be contained in a combination packaging. For liquids, the inner packaging must be leakproof, and the outer packaging must contain sufficient absorbent material to absorb the entire contents of the inner packaging. For sharps, the inner packaging (sharps container) must be constructed of a rigid material resistant to punctures and securely closed to prevent leaks or punctures, and the outer packaging must be securely closed to prevent leaks or punctures. For solids, liquids,

ED_001691B_00009240

and sharps, the outer packaging must be a strong, tight packaging securely closed and secured against shifting, including relative motion between packages, within the vehicle on which it is being transported.

(i) For other than a regulated medical waste, the amount of Division 6.2 material in a combination packaging must conform to the following limitations:

(A) One or more inner packagings, each of which may not contain more than 0.5 kg (1.1 lbs) or 0.5 L (17 ounces), and an outer packaging containing not more than 4 kg (8.8 lbs) or 4 L (1 gallon); or

(B) A single inner packaging containing not more than 16 kg (35.2 lbs) or 16 L (4.2 gallons) in a single outer packaging.

(ii) For a regulated medical waste, a combination packaging must consist of one or more inner packagings, each of which may not contain more than 4 kg (8.8 lbs) or 4 L (1 gallon), and an outer packaging containing not more than 16 kg (35.2 lbs) or 16 L (4.2 gallons).

(5) This section does not apply to a hazardous material that is self-reactive (see §173.124), poisonous by inhalation (see §173.133), or a hazardous waste.

(6) A limited quantity package prepared in accordance with §173.63(b), §173.150, §173.151(b) and (c), §173.152, §173.153, §173.154, §173.155, §173.161, §173.165, §173.167, §173.306(i), or §173.309(d) of this subchapter. Division 4.3 substances must be prepared in accordance with paragraph (a)(3) of this section. Class 7 (radioactive) substances, instruments and articles are not authorized under the provisions of this section.

(b) *Packaging.* (1) Packagings must be leak tight for liquids and gases, sift proof for solids, and be securely closed, secured against shifting, and protected against damage.

(2) Each material must be packaged in the manufacturer's original packaging, or a packaging of equal or greater strength and integrity.

(3) Outer packagings are not required for receptacles (e.g., cans and bottles) that are secured against shifting in cages, carts, bins, boxes or compartments.

(4) For gasoline, a packaging must be made of metal or plastic and conform to the requirements of this subchapter or to the requirements of the Occupational Safety and Health Administration of the Department of Labor contained in 29 CFR 1910.106(d)(2) or 1926.152(a)(1).

(5) A cylinder or other pressure vessel containing a Division 2.1 or 2.2 material must conform to packaging, qualification, maintenance, and use requirements of this subchapter, except that outer packagings are not required. Manifolding of cylinders is authorized provided all valves are tightly closed.

(c) *Hazard communication.* (1) A nonbulk packaging other than a cylinder (including a receptacle transported without an outer packaging) must be marked with a common name or proper shipping name to identify the material it contains, including the letters "RQ" if it contains a reportable quantity of a hazardous substance.

(2) A bulk packaging containing a diluted mixture of a Class 9 material must be marked on two opposing sides with the four-digit identification number of the material. The identification number must be displayed on placards, orange panels or, alternatively, a white square-on-point configuration having the same outside dimensions as a placard (at least 273 mm (10.8 inches) on a side), in the manner specified in §172.332 (b) and (c) of this subchapter.

(3) A DOT specification cylinder (except DOT specification 39) must be marked and labeled as prescribed in this subchapter. Each DOT-39 cylinder must display the markings specified in 178.65(i).

(4) The operator of a motor vehicle that contains a material of trade must be informed of the presence of the hazardous material (including whether the package contains a reportable quantity) and must be informed of the requirements of this section.

(d) *Aggregate gross weight.* Except for a material of trade authorized by paragraph (a)(1)(iii) of this section, the aggregate gross weight of all materials of trade on a motor vehicle may not exceed 200 kg (440 pounds).

(e) *Other exceptions.* A material of trade may be transported on a motor

ED_001691B_00009240

vehicle under the provisions of this section with other hazardous materials without affecting its eligibility for exceptions provided by this section.

[Amdt. 173–259, 62 FR 1216, Jan. 8, 1997, as amended by Amdt. 173–262, 62 FR 49566, Sept. 22, 1997; 62 FR 51560, Oct. 1, 1997; Amdt. 173–259, 63 FR 8142, Feb. 18, 1998; 63 FR 52849, Oct. 1, 1998; 66 FR 45381, Aug. 28, 2001; 67 FR 53137, Aug. 14, 2002; 68 FR 75742, Dec. 31, 2003; 68 FR 61941, Oct. 30, 2003; 71 FR 32258, June 2, 2006; 72 FR 55692, Oct. 1, 2007; 78 FR 1113, Jan. 7, 2013; 78 FR 15326, Mar. 11, 2013; 78 FR 65478, Oct. 31, 2013]

§ 173.7 Government operations and materials.

(a) Hazardous materials offered for transportation by, for, or to the Department of Defense (DOD) of the U.S. Government, including commercial shipments pursuant to a DOD contract, must be packaged in accordance with the regulations in this subchapter or in packagings of equal or greater strength and efficiency as certified by DOD in accordance with the procedures prescribed by "Packaging of Hazardous Material, DLAD 4145.41/AR 700–143/AFJI 24–210/NAVSUPINST 4030.55B/MCO 4030.40B (IBR, see § 171.7 of this subchapter)." Hazardous materials offered for transportation by DOD under this provision may be reshipped by any shipper to any consignee provided the original packaging has not been damaged or altered in any manner.

(1) Hazardous materials sold by the DOD in packagings that are not marked in accordance with the requirements of this subchapter may be shipped from DOD installations if the DOD certifies in writing that the packagings are equal to or greater in strength and efficiency than the packaging prescribed in this subchapter. The shipper shall obtain such a certification in duplicate for each shipment. He shall give one copy to the originating carrier and retain the other for no less than 1 year.

(2) [Reserved]

(b) Shipments of hazardous materials, made by or under the direction or supervision of the U.S. Department of Energy (DOE) or the Department of Defense (DOD), for the purpose of national security, and which are escorted by personnel specifically designated by or under the authority of those agencies, are not subject to the requirements of this subchapter. For transportation by a motor vehicle or a rail car, the escorts must be in a separate transport vehicle from the transport vehicle carrying the hazardous materials that are excepted by this paragraph. A document certifying that the shipment is for the purpose of national security must be in the possession of the person in charge of providing security during transportation.

(c) Shipments of explosive samples, not exceeding 1 g net weight, offered by and consigned to the Bureau of Alcohol, Tobacco and Firearms (ATF) of the Department of the Treasury are not otherwise subject to the regulations in parts 110–189 of this subchapter when placed in a specifically designed multi-unit assembly packed in a strong outer packaging. The packaging must be of a type accepted by ATF as capable of precluding a propagation of any explosion outside the packaging. The second component from the outside of the packaging must be marked or tagged to indicate the presence of an explosive.

(d) Notwithstanding the requirements of §§ 173.416 and 173.417 of this subchapter, packagings made by or under the direction of the U.S. Department of Energy may be used for the transportation of Class 7 materials when evaluated, approved, and certified by the Department of Energy against packaging standards equivalent to those specified in 10 CFR part 71. Packages shipped in accordance with this paragraph shall be marked and otherwise prepared for shipment in a manner equivalent to that required by this subchapter for packagings approved by the Nuclear Regulatory Commission.

(e) Class 1 (explosive) materials owned by the Department of Defense and packaged prior to January 1, 1990, in accordance with the requirements of this subchapter in effect at that time, are excepted from the marking and labeling requirements of part 172 of this subchapter and the packaging and package marking requirements of part 178 of this subchapter, provided the packagings have maintained their integrity and the explosive material is declared as "government-owned goods packaged prior to January 1, 1990" on

ED_001691B_00009240

the shipping papers. In addition, packages of these materials owned by the Department of Defense that are marked and labeled in conformance with the requirements of the HMR that were in effect at the time they were originally marked and labeled are excepted from the current marking and labeling requirements.

(f) The requirements of this subchapter do not apply to shipments of hazardous materials carried aboard an aircraft that is not owned by a government or engaged in carrying persons or property for commercial purposes, but is under the exclusive direction and control of the government for a period of not less than 90 days as specified in a written contract or lease. An aircraft is under the exclusive direction and control of a government when the government exercises responsibility for:

(1) Approving crew members and determining they are qualified to operate the aircraft;

(2) Determining the airworthiness and directing maintenance of the aircraft; and

(3) Dispatching the aircraft, including the times of departure, airports to be used, and type and amount of cargo to be carried.

[29 FR 18671, Dec. 29, 1964. Redesignated at 32 FR 5606, Apr. 5, 1967]

EDITORIAL NOTE: For FEDERAL REGISTER citations affecting § 173.7, see the List of CFR Sections Affected, which appears in the Finding Aids section of the printed volume and at *www.fdsys.gov*.

§ 173.8 Exceptions for non-specification packagings used in intrastate transportation.

(a) *Non-specification bulk packagings.* Notwithstanding requirements for specification packagings in subpart F of this part and parts 178 and 180 of this subchapter, a non-specification bulk packaging may be used for transportation of a hazardous material by an intrastate motor carrier until July 1, 2000, in accordance with the provisions of paragraph (d) of this section.

(b) *Non-specification cargo tanks for petroleum products.* Notwithstanding requirements for specification packagings in subpart F of this part and parts 178 and 180 of this subchapter, a non-specification cargo tank motor vehicle having a capacity of less than 13,250 L (3,500 gallons) may be used by an intrastate motor carrier for transportation of a flammable liquid petroleum product in accordance with the provisions of paragraph (d) of this section.

(c) *Permanently secured non-bulk tanks for petroleum products.* Notwithstanding requirements for specification packagings in subpart F of this part 173 and parts 178 and 180 of this subchapter, a non-specification metal tank permanently secured to a transport vehicle and protected against leakage or damage in the event of a turnover, having a capacity of less than 450 L (119 gallons), may be used by an intrastate motor carrier for transportation of a flammable liquid petroleum product in accordance with the provisions of paragraph (d) of this section.

(d) *Additional requirements.* A packaging used under the provisions of paragraphs (a), (b) or (c) of this section must—

(1) Be operated by an intrastate motor carrier and in use as a packaging for hazardous material before October 1, 1998;

(2) Be operated in conformance with the requirements of the State in which it is authorized;

(3) Be specifically authorized by a State statute or regulation in effect before October 1, 1998, for use as a packaging for the hazardous material being transported;

(4) Be offered for transportation and transported in conformance with all other applicable requirements of this subchapter;

(5) Not be used to transport a flammable cryogenic liquid, hazardous substance, hazardous waste, or a marine pollutant (except for gasoline); and

(6) For a tank authorized under paragraph (b) or (c) of this section, conform to all requirements in part 180 (except for § 180.405(g)) of this subchapter in the same manner as required for a DOT specification MC 306 cargo tank motor vehicle.

[Amdt. 173–259, 62 FR 1216, Jan. 8, 1997, as amended by Amdt. 172–262, 62 FR 49567, Sept. 22, 1997; Amdt. 173–259, 63 FR 8142, Feb. 18, 1998; 66 FR 45380, Aug. 28, 2001; 76 FR 56315, Sept. 13, 2011]

ED_001691B_00009240

§ 173.9 Transport vehicles or freight containers containing lading which has been fumigated.

(a) For the purpose of this section, not including 49 CFR part 387, a rail car, freight container, truck body, or trailer in which the lading has been fumigated with any material, or is undergoing fumigation, is a package containing a hazardous material.

(b) No person may offer for transportation or transport a rail car, freight container, truck body, or trailer in which the lading has been fumigated or treated with any material, or is undergoing fumigation, unless the FUMIGANT marking specified in paragraph (e) of this section is prominently displayed so that it can be seen by any person attempting to enter the interior of the transport vehicle or freight container. For domestic transportation, a hazard warning label authorized by EPA under 40 CFR part 156 may be used as an alternative to the FUMIGANT marking.

(c) No person may affix or display on a rail car, freight container, truck body, or trailer the FUMIGANT marking specified in paragraph (e) of this section, unless the lading has been fumigated or is undergoing fumigation.

(d) The FUMIGANT marking required by paragraph (b) of this section must remain on the rail car, freight container, truck body, or trailer until the rail car, freight container, truck body, or trailer has been completely ventilated either by opening the doors of the unit or by mechanical ventilation to ensure no harmful concentration of gas remains after fumigation has been completed.

(e) *FUMIGANT marking.* (1) The FUMIGANT marking must consist of black letters on a white background that is a rectangle at least 400 mm (15.75 inches) wide and at least 300 mm (11.8 inches) high as measured to the outside of the lines forming the border of the marking. The minimum width of the line forming the border must be 2 mm and the text on the marking must not be less than 25 mm high. Except for size and color, the FUMIGANT marking must be as shown in the following figure. Where dimensions are not specified, all features shall be in approximate proportion to those shown.

(i) *Transitional exception.* A marking in conformance with the requirements of this paragraph in effect on December 31, 2014, may continue to be used until December 31, 2016.

(ii) [Reserved]

ED_001691B_00009240

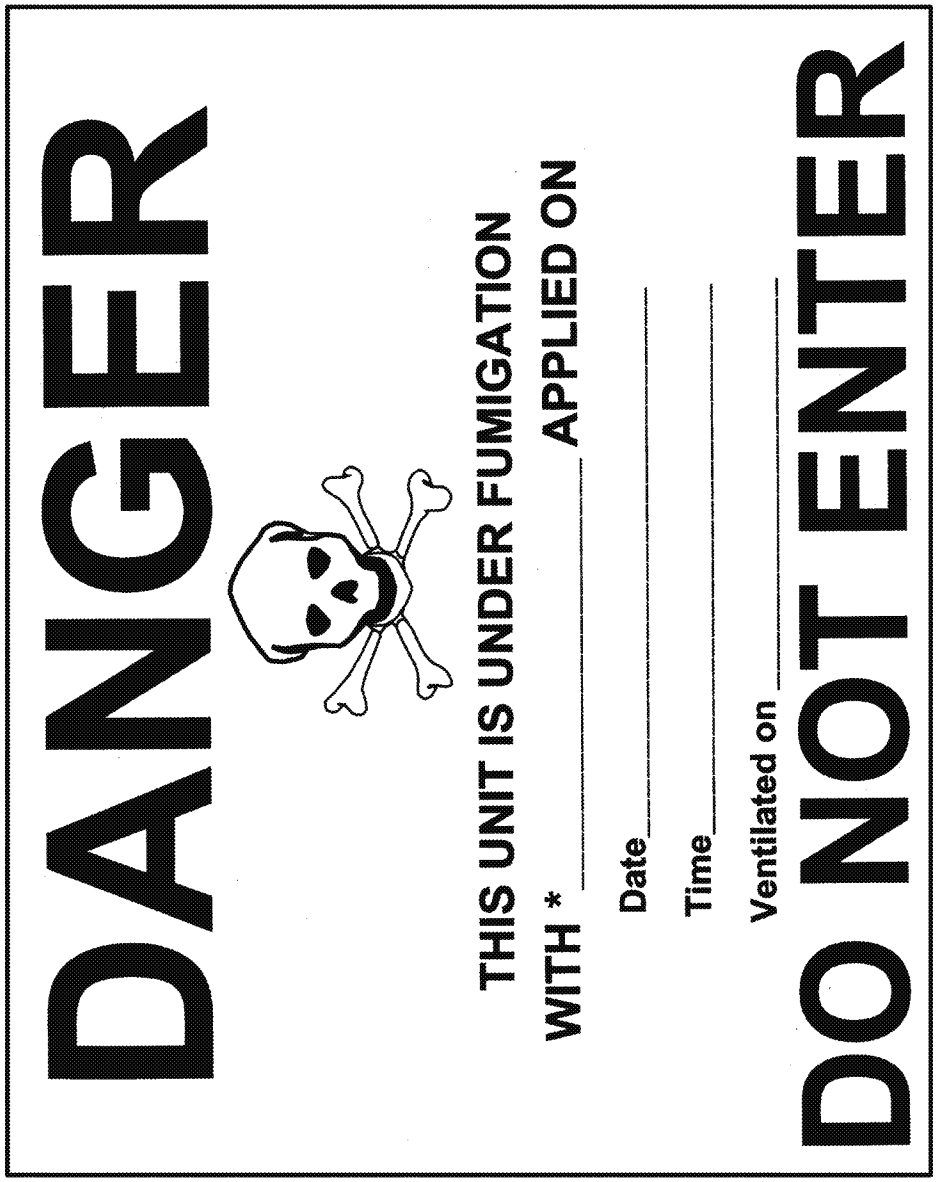

(2) The "*" shall be replaced with the technical name of the fumigant.

(f) A closed cargo transport unit that has been fumigated is not subject to any other provisions of this subchapter if it—

(1) Has been completely ventilated either by opening the doors of the unit or by mechanical ventilation after fumigation, and

(2) Displays the FUMIGANT marking, including the date of ventilation.

ED_001691B_00009240

(g) For international shipments, transport documents should indicate the date of fumigation, type and amount of fumigant used, and instructions for disposal of any residual fumigant, including fumigation devices.

(h) Any person subject to the requirements of this section, solely due to the fumigated lading, must be informed of the requirements of this section and the safety precautions necessary to protect themselves and others in the event of an incident or accident involving the fumigated lading.

(i) Any person who offers for transportation or transports a rail car, freight container, truck body or trailer that is subject to this subchapter solely because of the hazardous materials designation specified in paragraph (a) of this section is not subject to any requirements of this subchapter other than those contained in this section.

[71 FR 78629, Dec. 29, 2006, as amended at 80 FR 1152, Jan. 8, 2015]

§ 173.10 Tank car shipments.

(a) Tank cars containing any 2.1 material (including a cryogenic liquid) or Class 3 material with a flash point below 38 °C (100 °F), except liquid road asphalt or tar, may not be offered for transportation unless originally consigned or subsequently reconsigned to parties having private-siding (see Note 1 of this section) or to parties using railroad siding facilities which have been equipped for piping the liquid from tank cars to permanent storage tanks of sufficient capacity to receive contents of car.

(b) A tank car containing any Class 2 material must not be offered for transportation unless the car is consigned for delivery (see paragraph (c) of this section) and unloading on a private track (see Note 1 of this section) except that where no private track is available, delivery and unloading on carrier tracks is permitted provided the following conditions are complied with:

(1) Any tank car of DOT-106A or 110A type (see §§179.300 and 179.301 of this subchapter) may be offered for transportation and the loaded unit tanks may be removed from car frame on carrier tracks, provided the shipper has obtained from the delivering carrier and filed with originating carrier, written permission (see Note 2 of this section) for such removal. The consignee must furnish adequately safe mechanical hoist, obtained from the carrier if desirable, by which the tanks shall be lifted from the car and deposited directly upon vehicles furnished by the consignee for immediate removal from carrier property or tanks must be lifted by adequately safe mechanical hoist from car directly to vessels for further transportation.

(c) Any tank car of other than DOT-106A or 110A type (see §§179.300 and 179.301 of this subchapter), containing anhydrous ammonia, liquefied hydrocarbon or liquefied petroleum gas, and having interior pipes of liquid and gas discharge valves equipped with check valves, may be consigned for delivery and unloading on carrier tracks, if the lading is piped directly from the car to permanent storage tanks of sufficient capacity to receive the entire contents of the car. Such cars may also be consigned for storage on a private track or on a carrier track when designated by the carrier for such storage.

(d) For cars of the DOT-106A or 110A type (see §§179.300 and 179.301 of this subchapter), the tanks must be placed in position and attached to the car structure by the shipper.

(e) Class 3 materials with a flash point below 38 °C (100 °F) and Division 2.1 materials (including a cryogenic liquid) may not be loaded into tank cars on carrier property from tank trucks or drums.

NOTE 1: For this purpose, a private track is a track outside of carrier's right-of-way, yard, and terminals, and of which the carrier does not own either the rails, ties, roadbed or right-of-way; or a track or portion of a track which is devoted to the purpose of its user, either by lease or written agreement; in which case the lease or written agreement will be considered as equivalent to ownership.

NOTE 2: Carriers should give permission for the unloading of these containers on carrier tracks only where no private siding is available within reasonable trucking distance of final destination. The danger involved is the release of compressed gases due to accidental

ED_001691B_00009240

damage to container in handling. The exposure to this danger decreases directly with the isolation of the unloading point.

[29 FR 18773, Dec. 29, 1964. Redesignated at 32 FR 5606, Apr. 5, 1967, and by Amdt. 173–162, 48 FR 10226, Mar. 10, 1983, and amended by Amdt. 173–180, 49 FR 42735, Oct. 24, 1984; Amdt. 173–207, 53 FR 38274, Sept. 29, 1988; Amdt. 173–224, 55 FR 52608, Dec. 21, 1990; 56 FR 66265, Dec. 20, 1991; Amdt. 173–234, 58 FR 51532, Oct. 1, 1993; 67 FR 61013, Sept. 27, 2002]

§ 173.11 Exceptions for shipment of light bulbs containing hazardous materials.

The following light bulbs (lamps) are not subject to any other requirements of this subchapter provided they do not contain Class 7 (radioactive) material:

(a) Light bulbs that are collected directly from individuals and households when transported to a collection or recycling facility.

(b) Light bulbs each containing not more than 1 g of hazardous materials and packaged so that there is not more than 30 g of hazardous materials per package. Each light bulb must be packed in inner packagings separated by dividers, or surrounded by cushioning material to protect the light bulbs and packed into strong outer packagings meeting the requirements of § 173.24(b) of this subpart and capable of passing a 1.2 m (4 feet) drop test;

(c) Used, damaged, defective light bulbs each containing not more than 1 g of hazardous materials and packaged so that there is not more than 30 g of hazardous materials per package when transported from a collection or recycling facility. The light bulbs must be packed in strong outer packagings meeting the requirements of § 173.24(b) of this subpart and capable of passing a 1.2 m (4 feet) drop test.

(d) Light bulbs containing only gases of Division 2.2 provided they are packaged so that the projectile effects of any rupture of the bulb will be contained within the package.

[80 FR 1153, Jan. 8, 2015]

§ 173.12 Exceptions for shipment of waste materials.

(a) *Open head drums.* If a hazardous material that is a hazardous waste is required by this subchapter to be shipped in a closed head drum (i.e., a drum with a 7.0 cm (3 inches) or less bung opening) and the hazardous waste contains solids or semisolids that make its placement in a closed head drum impracticable, an equivalent (except for closure) open head drum may be used for the hazardous waste.

(b) *Lab packs.* (1) Waste materials prohibited by paragraph (b)(3) of this section are not authorized for transport in packages authorized by this paragraph (b). Waste materials classed as Class or Division 3, 4.1, 4.2, 4.3, 5.1, 5.2, 6.1, 8, or 9 are excepted from the specification packaging requirements of this subchapter for combination packagings if packaged in accordance with this paragraph (b) and transported for disposal or recovery by highway, rail or cargo vessel. In addition, a generic description from the § 172.101 Hazardous Materials Table may be used in place of specific chemical names, when two or more chemically compatible waste materials in the same hazard class are packaged in the same outside packaging.

(2) Combination packaging requirements:

(i) *Inner packagings.* The inner packagings must be either glass, not exceeding 4 L (1 gallon) rated capacity, or metal or plastic, not exceeding 20 L (5.3 gallons) rated capacity. Inner packagings containing liquid must be surrounded by a chemically compatible absorbent material in sufficient quantity to absorb the total liquid contents.

(ii) *Outer packaging.* Each outer packaging may contain only one class of waste material. The following outer packagings are authorized except that Division 4.2 Packing Group I materials must be packaged using UN standard steel or plastic drums tested and marked to the Packing Group I performance level for liquids or solids; and bromine pentafluoride and bromine trifluoride may not be packaged using UN 4G fiberboard boxes:

(A) A UN 1A2, UN 1B2 or UN 1N2 metal drum, a UN 1D plywood drum, a UN 1G fiber drum, or a UN 1H2 plastic drum, tested and marked to at least the Packing Group III performance level for liquids or solids;

(B) At a minimum, a double-walled UN 4G fiberboard box made out of 500 pound burst-strength fiberboard fitted with a polyethylene liner at least 3

ED_001691B_00009240

mils (0.003 inches) thick and when filled during testing to 95 percent capacity with a solid material, successfully passes the tests prescribed in §§178.603 (drop) and 178.606 (stacking), and is capable of passing the tests prescribed in §178.608 (vibration) to at least the Packing Group II performance level for liquids or solids; or

(C) A UN 11G fiberboard intermediate bulk container (IBC) or a UN 11HH2 composite IBC, fitted with a polyethylene liner at least 6 mils (0.006 inches) thick, that successfully passes the tests prescribed in subpart O of part 178 and §178.603 to at least the Packing Group II performance level for liquids or solids; a UN 11HH2 is composed of multiple layers of encapsulated corrugated fiberboard between inner and outer layers of woven coated polypropylene.

(iii) The gross weight of each completed combination package may not exceed 205 kg (452 lbs).

(3) *Prohibited materials.* The following waste materials may not be packaged or described under the provisions of this paragraph (b): a material poisonous-by-inhalation, a temperature controlled material unless it complies with §173.21(f)(1), a Division 6.1, Packing Group I material, chloric acid, and oleum (fuming sulfuric acid).

(c) *Reuse of packagings.* A previously used packaging may be reused for the shipment of waste material transported for disposal or recovery, not subject to the reconditioning and reuse provisions contained in §173.28 and part 178 of this subchapter, under the following conditions:

(1) Except as authorized by this paragraph, the waste must be packaged in accordance with this part and offered for transportation in accordance with the requirements of this subchapter.

(2) Transportation is performed by highway only.

(3) A package is not offered for transportation less than 24 hours after it is finally closed for transportation, and each package is inspected for leakage and is found to be free from leaks immediately prior to being offered for transportation.

(4) Each package is loaded by the shipper and unloaded by the consignee, unless the motor carrier is a private or contract carrier.

(5) The packaging may be used only once under this paragraph and may not be used again for shipment of hazardous materials except in accordance with §173.28.

(d) *Technical names for n.o.s. descriptions.* The requirements for the inclusion of technical names for n.o.s. descriptions on shipping papers and package markings, §§172.203 and 172.301 of this subchapter, respectively, do not apply to packages prepared in accordance with paragraph (b) of this section, except that packages containing materials meeting the definition of a hazardous substance must be described as required in §172.203 of this subchapter and marked as required in §172.324 of this subchapter.

(e) *Segregation requirements.* Waste materials packaged according to paragraph (b) of this section and transported in conformance with this paragraph (e) are not subject to the segregation requirements in §§174.81(d), 176.83(b), and 177.848(d) if blocked and braced in such a manner that they are separated from incompatible materials by a minimum horizontal distance of 1.2 m (4 feet) and the packages are loaded at least 100 mm (4 inches) off the floor of the freight container, unit load device, transport vehicle, or rail car. The following conditions specific to incompatible materials also apply:

(1) *General restrictions.* The freight container, unit load device, transport vehicle, or rail car may not contain any Class 1 explosives, Class 7 radioactive material, or uncontainerized hazardous materials;

(2) *Waste cyanides and waste acids.* For waste cyanides stored, loaded, and transported with waste acids:

(i) The cyanide or a cyanide mixture may not exceed 2 kg (4.4 pounds) net weight per inner packaging and may not exceed 10 kg (22 pounds) net weight per outer packaging; a cyanide solution may not exceed 2 L (0.6 gallon) per inner packaging and may not exceed 10 L (3.0 gallons) per outer packaging; and

(ii) The acids must be packaged in lab packs in accordance paragraph (b) of this section or in single packagings authorized for the acid in Column (8B) of the §172.101 Hazardous Materials

ED_001691B_00009240

Table of this subchapter not to exceed 208 L (55 gallons) capacity.

(3) *Waste Division 4.2 materials and waste Class 8 liquids.* For waste Division 4.2 materials stored, loaded, and transported with waste Class 8 liquids:

(i) The Division 4.2 material may not exceed 2 kg (4.4 pounds) net weight per inner packaging and may not exceed 10 kg (22 pounds) net weight per outer packaging; and

(ii) The Class 8 liquid must be packaged in lab packs in accordance with paragraph (b) of this section or in single packagings authorized for the material in Column (8B) of the § 172.101 Hazardous Materials Table of this subchapter not to exceed 208 L (55 gallons) capacity.

(4) *Waste Division 6.1 Packing Group I, Hazard Zone A material and waste Class 3, Class 8 liquids, or Division 4.1, 4.2, 4.3, 5.1 and 5.2 materials.* For waste Division 6.1 Packing Group I, Hazard Zone A material stored, loaded, and transported with waste Class 8 liquids, or Division 4.2, 4.3, 5.1 and 5.2 materials:

(i) The Division 6.1 Packing Group I, Hazard Zone A material must be packaged in accordance with § 173.226(c) of this subchapter and overpacked in a UN standard steel or plastic drum meeting the Packing Group I performance level;

(ii) The Class 8 liquid must be packaged in lab packs in accordance with paragraph (b) of this section or in single packagings authorized for the material in Column (8B) of the § 172.101 Hazardous Materials Table of this subchapter not to exceed 208 L (55 gallons) capacity.

(iii) The Division 4.2 material may not exceed 2 kg (4.4 pounds) net weight per inner packaging and may not exceed 10 kg (22 pounds) net weight per outer packaging;

(iv) The Division 5.1 materials may not exceed 2 kg (4.4 pounds) net weight per inner packaging and may not exceed 10 kg (22 pounds) net weight per outer packaging. The aggregate net weight per freight container, unit load device, transport vehicle, or rail car may not exceed 100 kg (220 pounds);

(v) The Division 5.2 material may not exceed 1 kg (2.2 pounds) net weight per inner packaging and may not exceed 5 kg (11 pounds) net weight per outer packaging. Organic Peroxide, Type B material may not exceed 0.5 kg (1.1 pounds) net weight per inner packaging and may not exceed 2.5 kg (5.5 pounds) net weight per outer packaging. The aggregate net weight per freight container, unit load device, transport vehicle, or rail car may not exceed 50 kg (110 pounds).

(f) *Additional exceptions.* Lab packs conforming to the requirements of this section are not subject to the following:

(1) The overpack marking and labeling requirements in § 173.25(a)(2) of this subchapter when secured to a pallet with shrink-wrap or stretch-wrap except that labels representative of each Hazard Class or Division in the overpack must be visibly displayed on two opposing sides.

(2) The restrictions for overpacks containing Class 8, Packing Group I material and Division 5.1, Packing Group I material in § 173.25(a)(5) of this subchapter. These waste materials may be overpacked with other materials.

(g) *Household waste.* Household waste, as defined in § 171.8 of this subchapter, is not subject to the requirements of this subchapter when transported in accordance with applicable state, local, or tribal requirements.

[Amdt. 173–224, 55 FR 52609, Dec. 21, 1990, as amended at 56 FR 66265, Dec. 20, 1991; Amdt. 173–231, 57 FR 52939, Nov. 5, 1992; Amdt. 173–138, 59 FR 49133, Sept. 26, 1994; 65 FR 50460, Aug. 18, 2000; 65 FR 58629, Sept. 29, 2000; 68 FR 48569, Aug. 14, 2003; 70 FR 3309, Jan. 24, 2005; 73 FR 4717, Jan. 28, 2008; 74 FR 2255, Jan. 14, 2009; 75 FR 27214, May 14, 2010; 76 FR 56315, Sept. 13, 2011; 77 FR 60942, Oct. 5, 2012; 78 FR 1073, Jan. 7, 2013; 78 FR 15326, Mar. 11, 2013]

§ 173.13 Exceptions for Class 3, Divisions 4.1, 4.2, 4.3, 5.1, 6.1, and Classes 8 and 9 materials.

(a) A Class 3, 8 or 9, or Division 4.1, 4.2, 4.3, 5.1, or 6.1 material is excepted from the labeling (except for the CARGO AIRCRAFT ONLY label), placarding and segregation requirements of this subchapter if prepared for transportation in accordance with the requirements of this section. A material that meets the definition of a material poisonous by inhalation may not be offered for transportation or transported under provisions of this section.

ED_001691B_00009240

(b) A hazardous material conforming to the requirements of this section may be transported by motor vehicle and rail car. In addition, packages prepared in accordance with this section may be transported by aircraft under the following conditions:

(1) *Cargo-only aircraft.* Only hazardous materials permitted to be transported aboard either a passenger or cargo-only aircraft by column (9A) or (9B) of the Hazardous Materials Table in § 172.101 of this subchapter are authorized aboard cargo-only aircraft.

(2) *Passenger carrying aircraft.* Only hazardous materials permitted to be transported aboard a passenger aircraft by column (9A) of the Hazardous Materials Table in § 172.101 of this subchapter are authorized aboard passenger aircraft. The completed package, assembled as for transportation, must be successfully tested in accordance with part 178 of this subchapter at the Packing Group I level. A hazardous material which meets the definition of a Division 5.1 (oxidizer) at the Packing Group I level in accordance with § 173.127(b)(1)(i) of this subchapter may not be transported aboard a passenger aircraft.

(3) Packages offered for transportation aboard either passenger or cargo-only aircraft must meet the requirements for transportation by aircraft specified in § 173.27 of this subchapter.

(c) A hazardous material permitted by paragraph (a) of this section must be packaged as follows:

(1) For liquids:

(i) The hazardous material must be placed in a tightly closed glass, plastic or metal inner packaging with a maximum capacity not exceeding 1.2 L. Sufficient outage must be provided such that the inner packaging will not become liquid full at 55 °C (130 °F). The net quantity (measured at 20 °C (68 °F)) of liquid in any inner packaging may not exceed 1 L. For transportation by aircraft, the net quantity in one package may not exceed the quantity specified in columns (9A) or (9B), as appropriate.

(ii) The inner packaging must be placed in a hermetically sealed barrier bag which is impervious to the lading, and then wrapped in a non-reactive absorbent material in sufficient quantity to completely absorb the contents of the inner packaging. Alternatively, the inner packaging may first be wrapped in a non-reactive absorbent material and then placed in the hermetically sealed barrier bag. The combination of inner packaging, absorbent material, and bag must be placed in a snugly fitting metal can.

(iii) The metal can must be securely closed. For liquids that are in Division 4.2 or 4.3, the metal can must be hermetically sealed. For Division 4.2 materials in Packing Group I, the metal can must be tested in accordance with part 178 of this subchapter at the Packing Group I performance level.

(iv) The metal can must be placed in a fiberboard box that is placed in a hermetically sealed barrier bag which is impervious to the lading.

(v) The intermediate packaging must be placed inside a securely closed, outer packaging conforming to § 173.201.

(vi) Not more than four intermediate packagings are permitted in an outer packaging.

(2) For solids:

(i) The hazardous material must be placed in a tightly closed glass, plastic or metal inner packaging. The net quantity of material in any inner packaging may not exceed 2.85kg (6.25 pounds). For transportation by aircraft, the net quantity in one package may not exceed the quantity specified in columns (9A) or (9B), as appropriate.

(ii) The inner packaging must be placed in a hermetically sealed barrier bag which is impervious to the lading.

(iii) The barrier bag and its contents must be placed in a fiberboard box that is placed in a hermetically-sealed barrier bag which is impervious to the lading.

(iv) The intermediate packaging must be placed inside an outer packaging conforming to § 173.211.

(v) Not more than four intermediate packagings are permitted in an outer packaging.

(d) The outside of the package must be marked, in association with the

ED_001691B_00009240

proper shipping name, with the statement: "This package conforms to 49 CFR 173.13."

[Amdt. 173–253, 61 FR 27173, May 30, 1996, as amended at 65 FR 50460, Aug. 18, 2000; 66 FR 45381, Aug. 28, 2001; 70 FR 3309, Jan. 24, 2005; 71 FR 54395, Sept. 14, 2006; 75 FR 27215, May 14, 2010]

Subpart B—Preparation of Hazardous Materials for Transportation

§ 173.21 Forbidden materials and packages.

Unless otherwise provided in this subchapter, the offering for transportation or transportation of the following is forbidden:

(a) Materials that are designated "Forbidden" in Column 3 of the § 172.101 table.

(b) Forbidden explosives as defined in § 173.54 of this part.

(c) Electrical devices, such as batteries and battery-powered devices, which are likely to create sparks or generate a dangerous evolution of heat, unless packaged in a manner which precludes such an occurrence.

(d) For carriage by aircraft, any package which has a magnetic field of more than 0.00525 gauss measured at 4.5 m (15 feet) from any surface of the package.

(e) A material in the same packaging, freight container, or overpack with another material, the mixing of which is likely to cause a dangerous evolution of heat, or flammable or poisonous gases or vapors, or to produce corrosive materials.

(f) A package containing a material which is likely to decompose with a self-accelerated decomposition temperature (SADT) of 50 °C (122 °F) or less, or polymerize at a temperature of 54 °C (130 °F) or less with an evolution of a dangerous quantity of heat or gas when decomposing or polymerizing, unless the material is stabilized or inhibited in a manner to preclude such evolution. The SADT may be determined by any of the test methods described in Part II of the UN Manual of Tests and Criteria (IBR, see § 171.7 of this subchapter).

(1) A package meeting the criteria of paragraph (f) of this section may be required to be shipped under controlled temperature conditions. The control temperature and emergency temperature for a package shall be as specified in the table in this paragraph based upon the SADT of the material. The control temperature is the temperature above which a package of the material may not be offered for transportation or transported. The emergency temperature is the temperature at which, due to imminent danger, emergency measures must be initiated.

§ 173.21 TABLE: METHOD OF DETERMINING CONTROL AND EMERGENCY TEMPERATURE.

SADT [1]	Control temperatures	Emergency temperature
SADT ≤20 °C (68 °F).	20 °C (36 °F) below SADT.	10 °C (18 °F) below SADT.
20 °C (68 °F) <SADT ≤35 °C (95 °F).	15 °C (27 °F) below SADT.	10 °C (18 °F) below SADT.
35 °C (95 °F) <SADT ≤50 °C (122 °F).	10 °C (18 °F) below SADT.	5 °C (9 °F) below SADT.
50 °C (122 °F) <SADT.	(2)	(2)

[1] Self-accelerating decomposition temperature.
[2] Temperature control not required.

(2) For self-reactive materials listed in § 173.224(b) table control and emergency temperatures, where required are shown in Columns 5 and 6, respectively. For organic peroxides listed in The Organic Peroxides Table in § 173.225 control and emergency temperatures, where required, are shown in Columns 7a and 7b, respectively.

(3) Refrigeration may be used as a means of stabilization only when approved by the Associate Administrator. Approvals issued by the Bureau of Explosives are no longer valid (see § 171.19 of this subchapter). Methods of stabilization approved by the Associate Administrator are as follows:

(i) For highway transportation:

(A) A material meeting the criteria of this paragraph (f) may be transported only in a transport vehicle, freight container, or motor vehicle equipped with a mechanical refrigeration unit, or loaded with a consumable refrigerant, capable of maintaining the inside temperature of the hazardous

ED_001691B_00009240

material at or below the control temperature required for the material during transportation.

(B) Each package containing a material meeting the criteria of this paragraph (f) must be loaded and maintained at or below the control temperature required for the material. The temperature of the material must be determined by appropriate means and entered on a written record at the time the packaging is loaded.

(C) The vehicle operator shall monitor the inside temperature of the transport vehicle, freight container, or motor vehicle and enter that temperature on a written record at the time the package is loaded and thereafter at intervals not exceeding two hours. Alternatively, a transport vehicle, freight container, or motor vehicle may be equipped with a visible or audible warning device that activates when the inside temperature of the transport vehicle, freight container, or motor vehicle exceeds the control temperature required for the material. The warning device must be readily visible or audible, as appropriate, from the vehicle operator's seat in the vehicle.

(D) The carrier shall advise the vehicle operator of the emergency temperature for the material, and provide the vehicle operator with written procedures that must be followed to assure maintenance of the control temperature inside the transport vehicle, freight container, or motor vehicle. The written procedures must include instructions for the vehicle operator on actions to take if the inside temperature exceeds the control temperature and approaches or reaches the emergency temperature for the material. In addition, the written temperature-control procedures must identify enroute points where the consumable refrigerant may be procured, or where repairs to, or replacement of, the mechanical refrigeration unit may be accomplished.

(E) The vehicle operator shall maintain the written temperature-control procedures, and the written record of temperature measurements specified in paragraph (f)(3)(i)(C) of this section, if applicable, in the same manner as specified in §177.817 of this subchapter for shipping papers.

(F) If the control temperature is maintained by use of a consumable refrigerant (e.g., dry ice or liquid nitrogen), the quantity of consumable refrigerant must be sufficient to maintain the control temperature for twice the average transit time under normal conditions of transportation.

(G) A material that has a control temperature of 40 °C (104 °F) or higher may be transported by common carrier. A material that has a control temperature below 40 °C (104 °F) must be transported by a private or contract carrier.

(ii) For transportation by vessel, shipments are authorized in accordance with the control temperature requirements in 7.3.7 of the IMDG Code (IBR, see §171.7 of this subchapter).

(g) Packages which give off a flammable gas or vapor, released from a material not otherwise subject to this subchapter, likely to create a flammable mixture with air in a transport vehicle.

(h) Packages containing materials (other than those classed as explosive) which will detonate in a fire.

(1) For purposes of this paragraph, "detonate" means an explosion in which the shock wave travels through the material at a speed greater than the speed of sound.

(2) When tests are required to evaluate the performance of a package under the provisions of this paragraph, the testing must be done or approved by one of the agencies specified in §173.56.

(i) Except for a package containing a lighter design sample that meets the requirements of §173.308(b)(2), a package containing a lighter (see §171.8 of this subchapter) containing a Division 2.1 material, of a design that has not been examined and successfully tested by an authorized person under the criteria specified in §173.308(a)(4) or, a lighter design containing a Class 3 material, that has not been approved by the Associate Administrator.

(j) An organic peroxide of the "ketone peroxide" category which contains more than 9 percent available oxygen as calculated using the equation in §173.128(a)(4)(ii). The category, ketone peroxide, includes, but is not limited to:

Acetyl acetone peroxide

ED_001691B_00009240

Cyclohexanone peroxide(s)
Diacetone alcohol peroxides
Methylcyclohexanone peroxide(s)
Methyl ethyl ketone peroxide(s)
Methyl isobutyl ketone peroxide(s)

(k) Notwithstanding any other provision of this subchapter, including subpart C of part 171 and 175.10(a)(2) of this subchapter, an oxygen generator (chemical) as cargo on a passenger-carrying aircraft. This prohibition does not apply to an oxygen generator for medical or personal use of a passenger that meets the requirements of § 175.10(a)(7) of this subchapter.

[Amdt. 173–224, 55 FR 52609, Dec. 21, 1990]

EDITORIAL NOTE: For FEDERAL REGISTER citations affecting § 173.21, see the List of CFR Sections Affected, which appears in the Finding Aids section of the printed volume and at *www.fdsys.gov*.

§ 173.22 Shipper's responsibility.

(a) Except as otherwise provided in this part, a person may offer a hazardous material for transportation in a packaging or container required by this part only in accordance with the following:

(1) The person shall class and describe the hazardous material in accordance with parts 172 and 173 of this subchapter, and

(2) The person shall determine that the packaging or container is an authorized packaging, including part 173 requirements, and that it has been manufactured, assembled, and marked in accordance with:

(i) Section 173.7(a) and parts 173, 178, or 179 of this subchapter;

(ii) A specification of the Department in effect at the date of manufacture of the packaging or container;

(iii) National or international regulations based on the UN Recommendations (IBR, see § 171.7 of this subchapter), as authorized in § 173.24(d)(2);

(iv) An approval issued under this subchapter; or

(v) An exemption or special permit issued under subchapter A of this chapter.

(3) In making the determination under paragraph (a)(2) of this section, the person may accept:

(i) Except for the marking on the bottom of a metal or plastic drum with a capacity over 100 L which has been reconditioned, remanufactured or otherwise converted, the manufacturer's certification, specification, approval, or exemption or special permit marking (see §§ 178.2 and 179.1 of this subchapter); or

(ii) With respect to cargo tanks provided by a carrier, the manufacturer's identification plate or a written certification of specification or exemption or special permit provided by the carrier.

(4)(i) For a DOT Specification or UN standard packaging subject to the requirements of part 178 of this subchapter, a person must perform all functions necessary to bring the package into compliance with parts 173 and 178 of this subchapter, as identified by the packaging manufacturer or subsequent distributor (for example, applying closures consistent with the manufacturer's closure instructions) in accordance with § 178.2 of this subchapter.

(ii) For other than a bulk package or a cylinder, a person must retain a copy of the manufacturer's notification, including closure instructions (*see* § 178.2(c) of this subchapter). For a bulk package or a cylinder, a person must retain a copy of the manufacturer's notification, including closure instructions (*see* § 178.2(c) of this subchapter), unless permanently embossed or printed on the package. A copy of the manufacturer's notification, including closure instructions (*see* § 178.2(c) of this subchapter), unless permanently embossed or printed on the package when applicable, must be made available for inspection by a representative of the Department upon request for at least 90 days once the package is offered to the initial carrier for transportation in commerce. Subsequent offerors of a filled and otherwise properly prepared unaltered package are not required to maintain manufacturer notification (including closure instructions).

(iii) When applicable, a person must retain a copy of any supporting documentation used to determine an equivalent level of performance under the selective testing variation in § 178.601(g)(1) of this subchapter. Such documentation is to be retained by the person certifying compliance with § 178.601(g)(1), as prescribed in

ED_001691B_00009240

§ 178.601(1), and retained as prescribed in paragraph (a)(4)(ii) of this section.

(b) No person may offer a motor carrier any hazardous material specified in 49 CFR 385.403 unless that motor carrier holds a safety permit issued by the Federal Motor Carrier Safety Administration.

(c) Prior to each shipment of fissile radioactive materials, and Type B or highway route controlled quantity packages of radioactive materials (see § 173.403), the shipper shall notify the consignee of the dates of shipment and expected arrival. The shipper shall also notify each consignee of any special loading/unloading instructions prior to his first shipment. For any shipment of irradiated reactor fuel, the shipper shall provide physical protection in compliance with a plan established under:

(1) Requirements prescribed by the U.S. Nuclear Regulatory Commission, or

(2) Equivalent requirements approved by the Associate Administrator.

[Amdt. 173–100, 42 FR 2689, Jan. 13, 1977]

EDITORIAL NOTE: For FEDERAL REGISTER citations affecting § 173.22, see the List of CFR Sections Affected, which appears in the Finding Aids section of the printed volume and at *www.fdsys.gov*.

§ 173.22a Use of packagings authorized under special permits.

(a) Except as provided in paragraph (b) of this section, no person may offer a hazardous material for transportation in a packaging the use of which is dependent upon an exemption or special permit issued under subpart B of part 107 of this title, unless that person is the holder of or a party to the exemption or special permit.

(b) If an exemption or special permit authorizes the use of a packaging for the transportation of a hazardous material by any person or class of persons other than or in addition to the holder of the exemption or special permit, that person or a member of that class of persons may use the packaging for the purposes authorized in the exemption or special permit subject to the terms specified therein. Copies of exemptions and special permits may be obtained by accessing the Hazardous Materials Safety Web site at *http://www.phmsa.dot.gov/hazmat/regs/sp-a*" or by writing to the Associate Administrator for Hazardous Materials Safety, U.S. Department of Transportation, East Building, 1200 New Jersey Avenue, SE., Washington, DC 20590–0001, Attention: Records Center.

(c) When an exemption or special permit issued to a person who offers a hazardous material contains requirements that apply to a carrier of the hazardous material, the offeror shall furnish a copy of the current exemption or special permit to the carrier before or at the time a shipment is tendered.

[70 FR 73165, Dec. 9, 2005, as amended at 72 FR 55692, Oct. 1, 2007; 76 FR 56315, Sept. 13, 2011]

§ 173.23 Previously authorized packaging.

(a) When the regulations specify a packaging with a specification marking prefix of "DOT," a packaging marked prior to January 1, 1970, with the prefix of "ICC" may be used in its place if the packaging otherwise conforms to applicable specification requirements.

(b) [Reserved]

(c) After July 2, 1982, a seamless aluminum cylinder manufactured in conformance with and for use under DOT special permit (SP) or exemption (E) 6498, 7042, 8107, 8364 or 8422 may be continued in use if marked before or at the time of the next retest with either the specification identification "3AL" immediately above the special permit or exemption number, or the DOT mark (e.g., DOT 3AL 1800) in proximity to the special permit or exemption marking.

(d) Cylinders (spheres) manufactured and marked under DOT special permit (SP) or exemption (E) 6616 prior to January 1, 1983, may be continued in use if marked before or at the time of the next retest with the specification identification "4BA" near the special permit or exemption marking.

(e) After October 1, 1984, cylinders manufactured for use under special permit (SP) or exemption (E) 6668 or 8404 may be continued in use, and must be marked "DOT-4LXXXYY" (XXX to be replaced by the service pressure, YY to

ED_001691B_00009240

be replaced by the letters "AL", if applicable) in compliance with Specification 4L (§178.57 of this subchapter) on or before January 1, 1986. The "DOT-4LXXXYY" must appear in proximity to other required special permit or exemption markings.

(f) An MC 331 cargo tank motor vehicle must conform to structural integrity requirements in §178.337–3 or to corresponding requirements in effect at the time of manufacture.

(g) A non-bulk packaging manufactured, tested, marked, and certified on or before September 30, 1996, in accordance with the applicable provisions of subparts L and M of part 178 of this subchapter in effect on September 30, 1995, may be used as authorized by this subchapter if the packaging conforms to all requirements applicable at the time of manufacture. In addition, such a packaging may be reused as authorized by §173.28 without a nominal thickness marking, if it conforms to the minimum thickness criteria prescribed in §173.28(b)(4).

(h) A packaging that is permanently marked with a special permit number, "DOT–SP" or "DOT–E," for which the provisions of the special permit have been incorporated into this subchapter may continue to be used for the life of the packaging without obliterating or otherwise removing the special permit number.

(i) An exemption packaging or shipping paper that is permanently marked "DOT-E" prior to October 1, 2007, may continue in use as long as the exemption or special permit remains valid, unless otherwise specified in the exemption or special permit.

[Amdt. 173–3, 33 FR 14921, Oct. 4, 1968]

EDITORIAL NOTE: For FEDERAL REGISTER citations affecting §173.23, see the List of CFR Sections Affected, which appears in the Finding Aids section of the printed volume and at *www.fdsys.gov*.

§173.24 General requirements for packagings and packages.

(a) *Applicability.* Except as otherwise provided in this subchapter, the provisions of this section apply to—

(1) Bulk and non-bulk packagings;

(2) New packagings and packagings which are reused; and

(3) Specification and non-specification packagings.

(b) Each package used for the shipment of hazardous materials under this subchapter shall be designed, constructed, maintained, filled, its contents so limited, and closed, so that under conditions normally incident to transportation—

(1) Except as otherwise provided in this subchapter, there will be no identifiable (without the use of instruments) release of hazardous materials to the environment;

(2) The effectiveness of the package will not be substantially reduced; for example, impact resistance, strength, packaging compatibility, etc. must be maintained for the minimum and maximum temperatures, changes in humidity and pressure, and shocks, loadings and vibrations, normally encountered during transportation;

(3) There will be no mixture of gases or vapors in the package which could, through any credible spontaneous increase of heat or pressure, significantly reduce the effectiveness of the packaging;

(4) There will be no hazardous material residue adhering to the outside of the package during transport.

(c) *Authorized packagings.* (1) A packaging is authorized for a hazardous material only if—

(i) The packaging is prescribed or permitted for the hazardous material in a packaging section specified for that material in Column 8 of the §172.101 table and conforms to applicable requirements in the special provisions of Column 7 of the §172.101 table and, for specification packagings (but not including UN standard packagings manufactured outside the United States), the specification requirements in parts 178 and 179 of this subchapter; or

(ii) The packaging is permitted under, and conforms to, provisions contained in subparts B or C of part 171 of this subchapter or §173.3, §173.4, §173.4a, §173.4b, §173.5, §173.5a, §173.6, §173.7, §173.8, §173.27, or §176.11 of this subchapter.

(2) The use of supplementary packagings within an outer packaging (*e.g.*,

ED_001691B_00009240

an intermediate packaging or a receptacle inside a required inner packaging) additional to what is required by this subchapter is authorized provided all applicable requirements of this subchapter are met and, when necessary, suitable cushioning is used to prevent movement within the packaging.

(d) *Specification packagings and UN standard packagings manufactured outside the U.S.*—(1) *Specification packagings.* A specification packaging, including a UN standard packaging manufactured in the United States, must conform in all details to the applicable specification or standard in part 178 or part 179 of this subchapter.

(2) UN standard packagings manufactured outside the United States. A UN standard packaging manufactured outside the United States, in accordance with national or international regulations based on the UN Recommendations (IBR, see §171.7 of this subchapter), may be imported and used and is considered to be an authorized packaging under the provisions of paragraph (c)(1) of this section, subject to the following conditions and limitations:

(i) The packaging fully conforms to applicable provisions in the UN Recommendations and the requirements of this subpart, including reuse provisions;

(ii) The packaging is capable of passing the prescribed tests in part 178 of this subchapter applicable to that standard; and

(iii) The competent authority of the country of manufacture provides reciprocal treatment for UN standard packagings manufactured in the U.S.

(e) *Compatibility.* (1) Even though certain packagings are specified in this part, it is, nevertheless, the responsibility of the person offering a hazardous material for transportation to ensure that such packagings are compatible with their lading. This particularly applies to corrosivity, permeability, softening, premature aging and embrittlement.

(2) Packaging materials and contents must be such that there will be no significant chemical or galvanic reaction between the materials and contents of the package.

(3) *Plastic packagings and receptacles.* (i) Plastic used in packagings and receptacles must be of a type compatible with the lading and may not be permeable to an extent that a hazardous condition is likely to occur during transportation, handling or refilling.

(ii) Each plastic packaging or receptacle which is used for liquid hazardous materials must be capable of withstanding without failure the procedure specified in appendix B of this part (''Procedure for Testing Chemical Compatibility and Rate of Permeation in Plastic Packagings and Receptacles''). The procedure specified in appendix B of this part must be performed on each plastic packaging or receptacle used for Packing Group I materials. The maximum rate of permeation of hazardous lading through or into the plastic packaging or receptacles may not exceed 0.5 percent for materials meeting the definition of a Division 6.1 material according to §173.132 and 2.0 percent for other hazardous materials, when subjected to a temperature no lower than—

(A) 18 °C (64 °F) for 180 days in accordance with Test Method 1 in appendix B of this part;

(B) 50 °C (122 °F) for 28 days in accordance with Test Method 2 in appendix B of this part; or

(C) 60 °C (140 °F) for 14 days in accordance with Test Method 3 in appendix B of this part.

(iii) Alternative procedures or rates of permeation are permitted if they yield a level of safety equivalent to or greater than that provided by paragraph (e)(3)(ii) of this section and are specifically approved by the Associate Administrator.

(4) *Mixed contents.* Hazardous materials may not be packed or mixed together in the same outer packaging with other hazardous or nonhazardous materials if such materials are capable of reacting dangerously with each other and causing—

(i) Combustion or dangerous evolution of heat;

(ii) Evolution of flammable, poisonous, or asphyxiant gases; or

(iii) Formation of unstable or corrosive materials.

(5) Packagings used for solids, which may become liquid at temperatures

ED_001691B_00009240

likely to be encountered during transportation, must be capable of containing the hazardous material in the liquid state.

(f) *Closures.* (1) Closures on packagings shall be so designed and closed that under conditions (including the effects of temperature, pressure and vibration) normally incident to transportation—

(i) Except as provided in paragraph (g) of this section, there is no identifiable release of hazardous materials to the environment from the opening to which the closure is applied; and

(ii) The closure is leakproof and secured against loosening. For air transport, stoppers, corks or other such friction closures must be held in place by positive means.

(2) Except as otherwise provided in this subchapter, a closure (including gaskets or other closure components, if any) used on a specification packaging must conform to all applicable requirements of the specification and must be closed in accordance with information, as applicable, provided by the manufacturer's notification required by § 178.2 of this subchapter.

(g) *Venting.* Venting of packagings, to reduce internal pressure which may develop by the evolution of gas from the contents, is permitted only when—

(1) Except for shipments of cryogenic liquids as specified in § 173.320(c) and of carbon dioxide, solid (dry ice), transportation by aircraft is not involved;

(2) Except as otherwise provided in this subchapter, the evolved gases are not poisonous, likely to create a flammable mixture with air or be an asphyxiant under normal conditions of transportation;

(3) The packaging is designed so as to preclude an unintentional release of hazardous materials from the receptacle;

(4) For bulk packagings, other than IBCs, venting is authorized for the specific hazardous material by a special provision in the § 172.101 table or by the applicable bulk packaging specification in part 178 of this subchapter; and

(5) Intermediate bulk packagings (IBCs) may be vented when required to reduce internal pressure that may develop by the evolution of gas subject to the requirements of paragraphs (g)(1) through (g)(3) of this section. The IBC must be of a type that has successfully passed (with the vent in place) the applicable design qualification tests with no release of hazardous material.

(h) *Outage and filling limits*—(1) *General.* When filling packagings and receptacles for liquids, sufficient ullage (outage) must be left to ensure that neither leakage nor permanent distortion of the packaging or receptacle will occur as a result of an expansion of the liquid caused by temperatures likely to be encountered during transportation. Requirements for outage and filling limits for non-bulk and bulk packagings are specified in §§ 173.24a(d) and 173.24b(a), respectively.

(2) *Compressed gases and cryogenic liquids.* Filling limits for compressed gases and cryogenic liquids are specified in §§ 173.301 through 173.306 for cylinders and §§ 173.314 through 173.319 for bulk packagings.

(i) *Air transportation.* Except as provided in subpart C of part 171 of this subchapter, packages prepared under § 173.167 of this part, or packages prepared under Packing Instruction Y963 of the ICAO Technical Instructions, packages offered or intended for transportation by aircraft must conform to the general requirements for transportation by aircraft in § 173.27.

[Amdt. 173–224, 55 FR 52610, Dec. 21, 1990]

EDITORIAL NOTE: For FEDERAL REGISTER citations affecting § 173.24, see the List of CFR Sections Affected, which appears in the Finding Aids section of the printed volume and at www.fdsys.gov.

§ 173.24a Additional general requirements for non-bulk packagings and packages.

(a) *Packaging design.* Except as provided in § 172.312 of this subchapter:

(1) *Inner packaging closures.* A combination packaging containing liquid hazardous materials must be packed so that closures on inner packagings are upright.

(2) *Friction.* The nature and thickness of the outer packaging must be such that friction during transportation is not likely to generate an amount of heat sufficient to alter dangerously the chemical stability of the contents.

(3) *Securing and cushioning.* Inner packagings of combination packagings

ED_001691B_00009240

must be so packed, secured and cushioned to prevent their breakage or leakage and to control their shifting within the outer packaging under conditions normally incident to transportation. Cushioning material must not be capable of reacting dangerously with the contents of the inner packagings or having its protective properties significantly weakened in the event of leakage.

(4) *Metallic devices.* Nails, staples and other metallic devices shall not protrude into the interior of the outer packaging in such a manner as to be likely to damage inner packagings or receptacles.

(5) *Vibration.* Each non-bulk package must be capable of withstanding, without rupture or leakage, the vibration test procedure specified in §178.608 of this subchapter.

(b) *Non-bulk packaging filling limits.* (1) A single or composite non-bulk packaging may be filled with a liquid hazardous material only when the specific gravity of the material does not exceed that marked on the packaging, or a specific gravity of 1.2 if not marked, except as follows:

(i) A Packing Group I packaging may be used for a Packing Group II material with a specific gravity not exceeding the greater of 1.8, or 1.5 times the specific gravity marked on the packaging, provided all the performance criteria can still be met with the higher specific gravity material;

(ii) A Packing Group I packaging may be used for a Packing Group III material with a specific gravity not exceeding the greater of 2.7, or 2.25 times the specific gravity marked on the packaging, provided all the performance criteria can still be met with the higher specific gravity material; and

(iii) A Packing Group II packaging may be used for a Packing Group III material with a specific gravity not exceeding the greater of 1.8, or 1.5 times the specific gravity marked on the packaging, provided all the performance criteria can still be met with the higher specific gravity material.

(2) Except as otherwise provided in this section, a non-bulk packaging may not be filled with a hazardous material to a gross mass greater than the maximum gross mass marked on the packaging.

(3) A single or composite non-bulk packaging which is tested and marked for liquid hazardous materials may be filled with a solid hazardous material to a gross mass, in kilograms, not exceeding the rated capacity of the packaging in liters, multiplied by the specific gravity marked on the packaging, or 1.2 if not marked. In addition:

(i) A single or composite non-bulk packaging which is tested and marked for Packing Group I liquid hazardous materials may be filled with a solid Packing Group II hazardous material to a gross mass, in kilograms, not exceeding the rated capacity of the packaging in liters, multiplied by 1.5, multiplied by the specific gravity marked on the packaging, or 1.2 if not marked.

(ii) A single or composite non-bulk packaging which is tested and marked for Packing Group I liquid hazardous materials may be filled with a solid Packing Group III hazardous material to a gross mass, in kilograms, not exceeding the rated capacity of the packaging in liters, multiplied by 2.25, multiplied by the specific gravity marked on the packaging, or 1.2 if not marked.

(iii) A single or composite non-bulk packaging which is tested and marked for Packing Group II liquid hazardous materials may be filled with a solid Packing Group III hazardous material to a gross mass, in kilograms, not exceeding the rated capacity of the packaging in liters, multiplied by 1.5, multiplied by the specific gravity marked on the packaging, or 1.2 if not marked.

(4) Packagings tested as prescribed in §178.605 of this subchapter and marked with the hydrostatic test pressure as prescribed in §178.503(a)(5) of this subchapter may be used for liquids only when the vapor pressure of the liquid conforms to one of the following:

(i) The vapor pressure must be such that the total pressure in the packaging (i.e., the vapor pressure of the liquid plus the partial pressure of air or other inert gases, less 100 kPa (15 psia)) at 55 °C (131 °F), determined on the basis of a maximum degree of filling in accordance with paragraph (d) of this section and a filling temperature of 15 °C (59 °F)), will not exceed two-thirds of the marked test pressure;

ED_001691B_00009240

(ii) The vapor pressure at 50 °C (122 °F) must be less than four-sevenths of the sum of the marked test pressure plus 100 kPa (15 psia); or

(iii) The vapor pressure at 55 °C (131 °F) must be less than two-thirds of the sum of the marked test pressure plus 100 kPa (15 psia).

(5) No hazardous material may remain on the outside of a package after filling.

(c) *Mixed contents.* (1) An outer nonbulk packaging may contain more than one hazardous material only when—

(i) The inner and outer packagings used for each hazardous material conform to the relevant packaging sections of this part applicable to that hazardous material;

(ii) The package as prepared for shipment meets the performance tests prescribed in part 178 of this subchapter for the packing group indicating the highest order of hazard for the hazardous materials contained in the package;

(iii) Corrosive materials (except ORM-D) in bottles are further packed in securely closed inner receptacles before packing in outer packagings; and

(iv) For transportation by aircraft, the total net quantity does not exceed the lowest permitted maximum net quantity per package as shown in Column 9a or 9b, as appropriate, of the §172.101 table. The permitted maximum net quantity must be calculated in kilograms if a package contains both a liquid and a solid.

(2) A packaging containing inner packagings of Division 6.2 materials may not contain other hazardous materials except—

(i) Refrigerants, such as dry ice or liquid nitrogen, as authorized under the HMR;

(ii) Anticoagulants used to stabilize blood or plasma; or

(iii) Small quantities of Class 3, Class 8, Class 9, or other materials in Packing Groups II or III used to stabilize or prevent degradation of the sample, provided the quantity of such materials does not exceed 30 mL (1 ounce) or 30 g (1 ounce) in each inner packaging. The maximum quantity in an outer package, including a hazardous material used to preserve or stabilize a sample, may not exceed 4 L (1 gallon) or 4 kg (8.8 pounds). Such preservatives are not subject to the requirements of this subchapter.

(d) Liquids must not completely fill a receptacle at a temperature of 55 °C (131 °F) or less.

[Amdt. 173–224, 55 FR 52611, Dec. 21, 1990, as amended at 56 FR 66265, Dec. 20, 1991; 57 FR 45460, Oct. 1, 1992; 58 FR 51532, Oct. 1, 1993; Amdt. 173–255, 61 FR 50624, Sept. 26, 1996; 66 FR 45380, Aug. 28, 2001; 68 FR 61941, Oct. 30, 2003; 71 FR 32258, June 2, 2006]

§ 173.24b Additional general requirements for bulk packagings.

(a) *Outage and filling limits.* (1) Except as otherwise provided in this subchapter, liquids and liquefied gases must be so loaded that the outage is at least five percent for materials poisonous by inhalation, or at least one percent for all other materials, of the total capacity of a cargo tank, portable tank, tank car (including dome capacity), multi-unit tank car tank, or any compartment thereof, at the following reference temperatures—

(i) 46 °C (115 °F) for a noninsulated tank;

(ii) 43 °C (110 °F) for a tank car having a thermal protection system, incorporating a metal jacket that provides an overall thermal conductance at 15.5 °C (60 °F) of no more than 10.22 kilojoules per hour per square meter per degree Celsius (0.5 Btu per hour/per square foot/ per degree F) temperature differential; or

(iii) 41 °C (105 °F) for an insulated tank.

(2) Hazardous materials may not be loaded into the dome of a tank car. If the dome of the tank car does not provide sufficient outage, vacant space must be left in the shell to provide the required outage.

(b) *Equivalent steel.* For the purposes of this section, the reference stainless steel is stainless steel with a guaranteed minimum tensile strength of 51.7 deka newtons per square millimeter (75,000 psi) and a guaranteed elongation of 40 percent or greater. Where the regulations permit steel other than stainless steel to be used in place of a specified stainless steel (for example, as in §172.102 of this subchapter, special provision B30), the minimum thickness for

ED_001691B_00009240

the steel must be obtained from one of the following formulas, as appropriate:

Formula for metric units

$$e_1 = (12.74e_0) / (Rm_1 A_1)^{1/3}$$

Formula for non-metric units

$$e_1 = (144.2e_0) / (Rm_1 A_1)^{1/3}$$

where:

e_0 = Required thickness of the reference stainless steel in mm or inches respectively;

e_1 = Equivalent thickness of the steel used in mm or inches respectively;

Rm_1 = Specified minimum tensile strength of the steel used in deka-newtons per square millimeter or pounds per square inch respectively; and

A_1 = Specified minimum percentage elongation of the steel used multiplied by 100 (for example, 20 percent times 100 equals 20). Elongation values used must be determined from a 50 mm or 2 inch test specimen.

(c) Air pressure in excess of ambient atmospheric pressure may not be used to load or unload any lading which may create an air-enriched mixture within the flammability range of the lading in the vapor space of the tank.

(d) A bulk packaging may not be loaded with a hazardous material that:

(1) Is at a temperature outside of the packaging's design temperature range; or

(2) Except as otherwise provided in this subchapter, exceeds the maximum weight of lading marked on the specification plate.

(e) *Stacking of IBCs and Large Packagings.* (1) IBCs and Large Packagings not designed and tested to be stacked. No packages or freight (hazardous or otherwise) may be stacked upon an IBC or a Large Packaging that was not designed and tested to be stacked upon.

(2) IBCs and Large Packagings designed and tested to be stacked. The superimposed weight placed upon an IBC or a Large Packaging designed to be stacked may not exceed the maximum permissible stacking test mass marked on the packaging.

(f) *UN portable tanks.* (1) A UN portable tank manufactured in the United States must conform in all details to the applicable requirements in parts 172, 173, 178 and 180 of this subchapter.

(2) *UN portable tanks manufactured outside the United States.* A UN portable tank manufactured outside the United States, in accordance with national or international regulations based on the UN Recommendations (IBR, see § 171.7 of this subchapter), which is an authorized packaging under § 173.24 of this subchapter, may be filled, offered and transported in the United States, if the § 172.101 Table of this subchapter authorizes the hazardous material for transportation in the UN portable tank and it conforms to the applicable T codes, and tank provision codes, or other special provisions assigned to the hazardous material in Column (7) of the Table. In addition, the portable tank must—

(i) Conform to applicable provisions in the UN Recommendations (IBR, see § 171.7 of this subchapter) and the requirements of this subpart;

(ii) Be capable of passing the prescribed tests and inspections in part 180 of this subchapter applicable to the UN portable tank specification;

(iii) Be designed and manufactured according to the ASME Code (IBR, see § 171.7 of this subchapter) or a pressure vessel design code approved by the Associate Administrator;

(iv) Be approved by the Associate Administrator when the portable tank is designed and constructed under the provisions of an alternative arrangement (see § 178.274(a)(2) of this subchapter); and

(v) The competent authority of the country of manufacture must provide reciprocal treatment for UN portable tanks manufactured in the United States.

[Amdt. 173–224, 55 FR 52612, Dec. 21, 1990, as amended at 56 FR 66266, Dec. 20, 1991; Amdt. 173–234, 58 FR 51532, Oct. 1, 1993; Amdt. 173–243, 60 FR 40038, Aug. 4, 1995; Amdt. 173–252, 61 FR 28676, June 5, 1996; Amdt. 173–255, 61 FR 50624, Sept. 26, 1996; 66 FR 33426, June 21, 2001; 67 FR 15743, Apr. 3, 2002; 68 FR 75742, Dec. 31, 2003; 74 FR 2255, Jan. 14, 2009; 76 FR 56315, Sept. 13, 2011]

§ 173.25 Authorized packagings and overpacks.

(a) Authorized packages containing hazardous materials may be offered for transportation in an overpack as defined in § 171.8 of this subchapter, if all of the following conditions are met:

ED_001691B_00009240

(1) The package meets the requirements of §§173.21 and 173.24 of this subchapter.

(2) The overpack is marked with the proper shipping name and identification number, when applicable, and is labeled as required by this subchapter for each hazardous material contained therein, unless marking and labels representative of each hazardous material in the overpack are visible.

(3) Each package subject to the orientation marking requirements of §172.312 of this subchapter is packed in the overpack with its filling holes up and the overpack is marked with package orientation marking arrows on two opposite vertical sides of the overpack with the arrows pointing in the correct direction of orientation.

(4) The overpack is marked with the word "OVERPACK" when specification packagings are required, unless specification markings on the inside packages are visible. The lettering on the "OVERPACK" marking must be at least 12 mm (0.5 inches) high.

(i) *Transitional exception.* A marking in conformance with the requirements of this paragraph in effect on December 31, 2014, may continue to be used until December 31, 2016.

(ii) For domestic transportation, an overpack marked prior to January 1, 2017 and in conformance with the requirements of this paragraph in effect on December 31, 2014, may continue in service until the end of its useful life.

(5) Packages containing Class 8 (corrosive) materials in Packing Group I or Division 5.1 (oxidizing) materials in Packing Group I may not be overpacked with any other materials.

(6) For limited quantities and ORM material, the overpack is marked with a limited quantity marking prescribed in §172.315 of this subchapter or, the ORM marking prescribed in §172.316 of this subchapter, unless a limited quantity or ORM marking representative of the hazardous material in the overpack is visible.

(7) For excepted quantities, the overpack is marked with the required marking of §173.4a of this part unless visible.

(b) Shrink-wrapped or stretch-wrapped trays may be used as outer packagings for inner packagings prepared in accordance with the limited quantity provisions or consumer commodity provisions of this subchapter, provided that—

(1) Inner packagings are not fragile, liable to break or be easily punctured, such as those made of glass, porcelain, stoneware or certain plastics; and

(2) Each complete package does not exceed 20 kg (44 lbs) gross weight.

(c) Hazardous materials which are required to be labeled POISON may be transported in the same motor vehicle with material that is marked or known to be foodstuffs, feed or any edible material intended for consumption by humans or animals provided the hazardous material is marked, labeled, and packaged in accordance with this subchapter, conforms to the requirements of paragraph (a) of this section and is overpacked as specified in §177.841(e) of this subchapter or in an overpack which is a UN 1A2, 1B2, or 1N2 drum tested and marked for a Packing Group II or higher performance level.

[Amdt. 173–165, 48 FR 28099, June 20, 1983, as amended by Amdt. 173–224, 55 FR 52612 Dec. 21, 1990; 56 FR 66266, Dec. 20, 1991; Amdt. 173–234, 58 FR 51532, Oct. 1, 1993; Amdt. 173–214, 59 FR 67491, Dec. 29, 1994; 64 FR 10776, Mar. 5, 1999; 68 FR 45032, July 31, 2003; 69 FR 76155, Dec. 20, 2004; 70 FR 34397, June 14, 2005; 73 FR 57005, Oct. 1, 2008; 76 FR 3368, Jan. 19, 2011; 78 FR 1113, Jan. 7, 2013; 78 FR 65479, Oct. 31, 2013; 79 FR 40610, July 11, 2014; 80 FR 1154, Jan. 8, 2015]

§ 173.26 Quantity limitations.

When quantity limitations do not appear in the packaging requirements of this subchapter, the permitted gross weight or capacity authorized for a packaging is as shown in the packaging specification or standard in part 178 or 179, as applicable, of this subchapter.

[Amdt. 173–224, 55 FR 52612, Dec. 21, 1990]

§ 173.27 General requirements for transportation by aircraft.

(a) The requirements of this section are in addition to requirements prescribed elsewhere under this part and apply to packages offered or intended for transportation aboard aircraft. Except for materials not subject to performance packaging requirements in subpart E of this part, a packaging

containing a Packing Group III material with a primary or subsidiary risk of Division 4.1, 4.2, 4.3, 5.1, or Class 8 must meet the Packing Group II performance level when offered for transportation by aircraft.

(b) *Packages authorized onboard aircraft.* (1) When Column 9a of the § 172.101 table indicates that a material is ''Forbidden'', that material may not be offered for transportation or transported aboard passenger-carrying aircraft.

(2) When Column 9b of the § 172.101 table indicates that a material is ''Forbidden'', that material may not be offered for transportation or transported aboard aircraft.

(3) The maximum quantity of hazardous material in a package that may be offered for transportation or transported aboard a passenger-carrying aircraft or cargo aircraft may not exceed that quantity prescribed for the material in Column 9a or 9b, respectively, of the § 172.101 table.

(4) A package containing a hazardous material which is authorized aboard cargo aircraft but not aboard passenger aircraft must be labeled with the CARGO AIRCRAFT ONLY label required by § 172.402(c) of this subchapter and may not be offered for transportation or transported aboard passenger-carrying aircraft.

(c) *Pressure requirements.* (1) Packagings must be designed and constructed to prevent leakage that may be caused by changes in altitude and temperature during transportation aboard aircraft.

(2) Packagings for which retention of liquid is a basic function must be capable of withstanding without leakage the greater of—

(i) An internal pressure which produces a gauge pressure of not less than 75 kPa (11 psig) for liquids in Packing Group III of Class 3 or Division 6.1; or 95 kPa (14 psig) for other liquids; or

(ii) A pressure related to the vapor pressure of the liquid to be conveyed, determined by one of the following:

(A) The total gauge pressure measured in the receptacle (i.e., the vapor pressure of the material and the partial pressure of air or other inert gases, less 100 kPa (15 psia)) at 55 °C (131 °F), multiplied by a safety factor of 1.5; determined on the basis of a filling temperature of 15 °C (59 °F) and a degree of filling such that the receptacle is not completely liquid full at a temperature of 55 °C (131 °F) or less;

(B) 1.75 times the vapor pressure at 50 °C (122 °F) less 100 kPa (15 psia); or

(C) 1.5 times the vapor pressure at 55 °C (131 °) less 100 kPa (15 psia).

(3) Notwithstanding the provisions of paragraph (c)(2) of this section—

(i) Hazardous materials may be contained in an inner packaging which does not itself meet the pressure requirement provided that the inner packaging is packed within a supplementary packaging which does meet the pressure requirement and other applicable packaging requirements of this subchapter.

(ii) Packagings which are subject to the hydrostatic pressure test and marking requirements of §§ 178.605 and 178.503(a)(5), respectively, of this subchapter must have a marked test pressure of not less than 250 kPa (36 psig) for liquids in Packing Group I, 80 kPa (12 psig) for liquids in Packing Group III of Class 3 or Division 6.1, and 100 kPa (15 psig) for other liquids.

(d) *Closures.* The body and closure of any packaging must be constructed to be able to adequately resist the effects of temperature and vibration occurring in conditions normally incident to air transportation. Inner packaging or receptacle closures of combination packages containing liquids must be held securely, tightly and effectively in place by secondary means. Examples of such secondary methods include: Adhesive tape, friction sleeves, welding or soldering, locking wires, locking rings, induction heat seals, and child-resistant closures. The closure device must be designed so that it is unlikely that it can be incorrectly or incompletely closed. Closures must be as follows:

(1) *Packing Group I.* An inner packaging containing liquids of Packing Group I must have a secondary means of closure applied and packed in accordance with paragraph (e) of this section.

(2) *Packing Groups II and III.* When a secondary means of closure cannot be applied or is impracticable to apply to an inner packaging containing liquids

ED_001691B_00009240

of Packing Groups II and III, this requirement may be satisfied by securely closing the inner packaging and placing it in a leakproof liner or bag before placing the inner packaging in its outer packaging.

(e) *Absorbent materials.* Except as otherwise provided in this subchapter, Packing Group I liquid hazardous materials of Classes 3, 4, or 8, or Divisions 5.1 or 6.1 that are packaged in combination packagings and offered for air transport in glass, earthenware, plastic, or metal inner packagings must be packed using absorbent material as follows:

(1) Inner packagings must be packed in a rigid and leakproof receptacle or intermediate packaging containing sufficient absorbent material to absorb the entire contents of the inner packaging before packing the inner packaging in its outer package.

(2) Absorbent material must not react dangerously with the liquid (see §§ 173.24 and 173.24a.).

(f) *Combination packagings*—(1) *Excepted quantities.* For authorized materials and inner and outer package quantity limits for combination packages of *excepted quantities* intended for transportation by aircraft, *see* § 173.4a of this part. Unless otherwise specified in this part, or in Subpart C of part 171 of this subchapter, when combination packagings are intended for transportation aboard an aircraft, inner packagings must conform to the quantity limitations set forth in table 1 of this paragraph for transport aboard passenger-carrying aircraft and table 2 of this paragraph for transport aboard cargo-only aircraft.

(2) *Limited quantities.* (i) Unless otherwise specified in this part, or in subpart C of part 171 of this subchapter, when a limited quantity of hazardous material packaged in a combination packaging is intended for transportation aboard an aircraft, the inner and outer packagings must conform to the quantity limitations set forth in Table 3 of this paragraph. Substances and articles must be authorized for transportation aboard a passenger-carrying aircraft (see Column (9A) of the § 172.101 Hazardous Materials Table of this subchapter). As such, not all unauthorized substances or articles may be indicated in this section. Unless otherwise excepted, packages must be marked and labeled in accordance with this section and any additional requirements in subparts D and E, respectively, of part 172 of this subchapter. Materials or articles *not* authorized as limited quantity by aircraft are:

(A) Those in Packing Group I;

(B) Class 1 (explosive) material (see § 173.63(b) of this part for exceptions provided to certain articles of Division 1.4S) and Class 7 (radioactive) material (see §§ 173.421 through 173.425 of this part, as applicable, for exceptions provided to certain substances, instruments or articles of Class 7);

(C) Divisions 2.1 (flammable gas) (*except* Aerosols (UN1950) and Receptacles, small (UN2037) without subsidiary risk) and Division 2.3 (toxic gas);

(D) Divisions 4.1 (self-reactive), 4.2 (spontaneously combustible) (primary or subsidiary risk), and 4.3 (dangerous when wet) (liquids);

(E) Division 5.2 (organic peroxide) (*except* when contained in a Chemical or First aid kit (UN3316) or Polyester resin kit (UN3269) (Types D, E and F non-temperature controlled only));

(F) Class 8 (corrosive) materials UN2794, UN2795, UN2803, UN2809, UN3028, UN3506; and

(G) All Class 9 (miscellaneous) materials *except for* UN1941, UN1990, UN2071, UN3077, UN3082, UN3316, UN3334, UN3335, and ID8000.

(ii) Effective January 1, 2012, packages must be marked with the limited quantity "Y" mark as prescribed in § 172.315 of this part when conforming to Table 3 of this paragraph. Until December 31, 2012, a package may instead be marked with the proper shipping name "Consumer commodity" and "ORM–D–AIR" (including "Charcoal, NA1361) if it contains a consumer commodity, as authorized by this subchapter in effect on October 1, 2010.

(iii) Strong outer packagings are required and a completed package may not exceed 30 kg (66 lbs) gross weight.

(iv) A secondary means of closure required for all liquids contained in inner packagings. If this requirement cannot be satisfied, the use of an intermediate and leakproof form of containment, such as a liner, is required.

ED_001691B_00009240

(v) Packages must be capable of passing a 1.2 m drop test on to a rigid, nonresilient, flat and horizontal surface, in the position most likely to cause damage. The criteria for passing the test is that the outer packaging must not exhibit any damage affecting safety in transport and there must be no leakage from the inner packagings.

(vi) Each package must be capable of withstanding, without breakage or leakage of any inner packaging, a force applied to the top surface for a duration of 24 hours equivalent to the total weight of identical packages if stacked to a height of 3 m (including the test sample).

(vii) Except for UN3082, inner packagings of combination packagings containing liquids must be capable of passing the appropriate pressure differential test prescribed in paragraph (c) of this section.

(3) The tables are as follows:

TABLE 1—MAXIMUM NET CAPACITY OF INNER PACKAGING FOR TRANSPORTATION ON PASSENGER-CARRYING AIRCRAFT

Maximum net quantity per package from Column 9a of the § 172.101 table	Maximum authorized net capacity *of each inner packaging*	
	Glass, earthenware or fiber inner packagings	Metal or plastic inner packagings
Liquids:		
Not greater than 0.5L	0.5L	0.5L.
Greater than 0.5L. not greater than IL	0.5L	IL.
Greater than 1L, not greater than 5L	1L	5L.
Greater than 5L, not greater than 60L	2.5L	10L.
Greater than 60L, not greater than 220L	5L	25L.
Greater than 220L	No limit	No limit.
Solids:		
Not greater than 5 kg	0.5 kg	1 kg.
Greater than 5 kg, not greater than 25 kg	1 kg	2.5 kg.
Greater than 25 kg, not greater than 200 kg	5 kg	10 kg.
Greater than 200 kg	No limit	No limit.

TABLE 2—MAXIMUM NET CAPACITY OF INNER PACKAGING FOR TRANSPORTATION ON CARGO AIRCRAFT

Maximum net quantity per package from Column 9b of the § 172.101 table	Maximum authorized net capacity *of each inner packaging*	
	Glass, earthenware or fiber inner packagings	Metal or plastic inner packagings
Liquids:		
Not greater than 2.5L	1L	1L.
Greater than 2.5L, not greater than 30L	2.5L	2.5L.
Greater than 30L, not greater than 60L	5L	10L.
Greater than 60L, not greater than 220L	5L	25L.
Greater than 220L	No limit	No limit.
Solids:		
Not greater than 15 kg	1 kg	2.5 kg.
Greater than 15 kg, not greater than 50 kg	2.5 kg	5 kg.
Greater than 50 kg, not greater than 200 kg	5 kg	10 kg.
Greater than 200 kg	No limit	No limit.

TABLE 3—MAXIMUM NET QUANTITY OF EACH INNER AND OUTER PACKAGING FOR MATERIALS AUTHORIZED FOR TRANSPORTATION AS LIMITED QUANTITY BY AIRCRAFT

Hazard class or division	Maximum authorized net quantity *of each inner packaging*		Maximum authorized net quantity *of each outer package*	Notes
	Glass, earthenware or fiber inner packagings	Metal or plastic inner packagings		
Class 1	Forbidden (See note).			See § 173.63(b) of this part for exceptions provided to certain articles of Division 1.4S.

ED_001691B_00009240

TABLE 3—MAXIMUM NET QUANTITY OF EACH INNER AND OUTER PACKAGING FOR MATERIALS AUTHORIZED FOR TRANSPORTATION AS LIMITED QUANTITY BY AIRCRAFT—Continued

Hazard class or division	Maximum authorized net quantity *of each inner packaging*		Maximum authorized net quantity *of each outer package*	Notes
	Glass, earthenware or fiber inner packagings	Metal or plastic inner packagings		
Class 2	.....	.....	30 kg Gross	*Authorized materials:* Aerosols (UN1950) in Divisions 2.1 and 2.2, and Receptacles, small (UN2037) in Divisions 2.1 and 2.2 without subsidiary risk and Fuel cells cartridges (UN3478, UN3479), see § 173.230 of this part.
Class 3	PG I: Forbidden.			
	PG II: 0.5L	PG II: 0.5L	PG II: 1L*	*Maximum net quantity per outer package with corrosive subsidiary risk (e.g., UN2924, UN3286) is 0.5L. For Class 3 base materials as part of a Polyester resin kit (UN3269), see § 173.165 of this part for additional requirements, as applicable. Inner packaging limit for UN3269 base material is 1.0 L. For Fuel cell cartridges *containing flammable liquids* (UN3473), see § 173.230 of this part.
	PG III: 2.5L* *Corrosive subsidiary risk (e.g., UN2924) or toxic (e.g., UN1992) is 1L.	PG III: 5.0L* *Corrosive subsidiary risk (e.g., UN2924) or toxic (e.g., UN1992) is 1L.	PG III: 10L*	*Maximum net quantity per outer package with corrosive subsidiary risk (e.g., UN2924) is 1L and toxic subsidiary risk (e.g., UN1992) is 2L. For Class 3 base materials as part of a Polyester resin kit (UN3269), see § 173.165 of this part for additional requirements, as applicable. Inner packaging limit for UN3269 base material is 1.0 L.
Division 4.1 (does not include self-reactive material).	PG I: Forbidden.			
	PG II: 0.5 kg	PG II: 0.5 kg	PG II: 5 kg*	*Maximum net quantity per outer package with toxic subsidiary risk (e.g., UN3179) is 1 kg.
	PG III: 1 kg	PG III: 1 kg	PG III: 10 kg*	*Maximum net quantity per outer package with corrosive subsidiary risk (e.g., UN3180) is 5 kg.
Division 4.2 (Primary or subsidiary).	Forbidden*	.....	25 kg (net mass)*	*Until December 31, 2012, Charcoal (NA1361), PG III, may be transported as a limited quantity and may be renamed Consumer commodity and reclassed ORM-D-AIR, if eligible.
Division 4.3 (solid material only).	PG I solids and all liquids regardless of Packing Group: Forbidden.			
	PG II: 0.5 kg	PG II: 0.5 kg	PG II: 5 kg*	*Maximum net quantity per outer package with toxic subsidiary risk (e.g., UN3134) is 1 kg. For fuel cell cartridges *containing water reactive substances* (UN3476), see § 173.230 of this part.
	PG III: 1 kg	PG III: 1 kg	PG III: 10 kg*	*Maximum net quantity per outer package with corrosive or flammable subsidiary risk (e.g., UN3131 or UN3132, respectively) is 5 kg.
Division 5.1 (Liquid or solid material).	PG I: Forbidden.			
Division 5.1 (liquid material).	PG II: 0.1L	PG II: 0.1L	PG II: 0.5L.	
	PG III: 0.5L	PG III: 0.5L	PG III: 1.0L.	
Division 5.1 (solid material).	PG II: 0.5 kg	PG II: 0.5 kg	PG II: 2.5 kg*	*Maximum net quantity per outer package with toxic subsidiary risk (e.g., UN3087) is 1 kg.

ED_001691B_00009240

TABLE 3—MAXIMUM NET QUANTITY OF EACH INNER AND OUTER PACKAGING FOR MATERIALS AUTHORIZED FOR TRANSPORTATION AS LIMITED QUANTITY BY AIRCRAFT—Continued

Hazard class or division	Maximum authorized net quantity *of each inner packaging*		Maximum authorized net quantity *of each outer package*	Notes
	Glass, earthenware or fiber inner packagings	Metal or plastic inner packagings		
	PG III: 1.0 kg	PG III: 1.0 kg	PG III: 10 kg*	*Maximum net quantity per outer package with corrosive subsidiary risk (e.g., UN3085) is 1 kg.
Division 5.2 (liquid material).	30 mL	30 mL	1 kg	*Authorized materials:* Types D, E and F are authorized only as part of a Chemical or First aid kit (UN3316) packaged in accordance with § 173.161 of this part or a Polyester resin kit (UN3269) packaged in accordance with § 173.165 of this part. See §§ 173.161 and 173.165, as applicable, for additional requirements.
Division 5.2 (solid material).	100g	100g	1 kg	Solid activators of Types D, E and F are limited to 100 g per inner packaging for UN3316 and UN3269. See §§ 173.161 and 173.165, as applicable, for additional requirements.
Division 6.1	PG I (Inhalation or otherwise): Forbidden.			
Division 6.1 (liquid material).	PG II: 0.1L	PG II: 0.1L	PG II: 1.0L*	*Maximum net quantity per outer package with corrosive subsidiary risk (e.g., UN3289) is 0.5L.
	PG III: 0.5L	PG III: 0.5L	PG III: 2.0L.	
Division 6.1 (solid material).	PG II: 0.5 kg	PG II: 0.5 kg	PG II: 1.0 kg.	
	PG III: 1.0 kg	PG III: 1.0 kg	PG III: 10 kg.	
Class 7	Forbidden (See note).			See §§ 173.421 through 173.425 of this part, as applicable, for exceptions provided to certain substances, instruments or articles of Class 7.
Class 8	PG I: Forbidden.			
Class 8 (liquid material).	PG II: 0.1L	PG II: 0.1L	PG II: 0.5L	For "Fuel cell cartridges *containing corrosive substances*" (UN3477), see § 173.230 of this part.
	PG III: 0.5L	PG III: 0.5L	PG III: 1.0L.	
Class 8 (solid material).	PG II: 0.5 kg	PG II: 0.5 kg	PG II: 5.0 kg*	*Maximum net quantity per outer package for UN2430 is 1.0 kg. UN2794, UN2795, UN2803, UN2809, UN3028 are not authorized as limited quantity.
	PG III: 1.0 kg	PG III: 1.0 kg	PG III: 5.0 kg.	
Class 9 (liquid material).	30 mL (UN3316); 5.0L (UN1941, UN1990, UN3082, UN3334).	30 mL (UN3316); 5.0L (UN1941, UN1990, UN3082, UN3334).	1 kg (UN3316); 30 kg gross (all other authorized Class 9 material).	*Authorized materials:* UN1941, UN1990, UN2071, UN3077, UN3082, UN3334, and UN3335. Additionally, Consumer commodity (ID8000) in accordance with § 173.167 of this part and Chemical kit or First aid kit (UN3316) in accordance with § 173.161 of this part are authorized.
Class 9 (solid material).	100 g (UN3316); 5.0 kg (UN2071, UN3077, UN3335).	100 g (UN3316); 5.0 kg (UN2071, UN3077, UN3335).	1 kg (UN3316); 30 kg gross (all other authorized Class 9 material).	

(g) *Cylinders.* For any cylinder containing hazardous materials and incorporating valves, sufficient protection must be provided to prevent operation of, and damage to, the valves during transportation, by one of the following methods:

(1) By equipping each cylinder with securely attached valve caps or protective headrings; or

(2) By boxing or crating the cylinder.

ED_001691B_00009240

(h) Tank cars and cargo tanks. Any tank car or cargo tank containing a hazardous material may not be transported aboard aircraft.

(i) Effective October 1, 2006, each person who offers a hazardous material for transportation by aircraft must include the certification statement specified in §172.204(c)(3).

[Amdt. 173–224, 55 FR 52612, Dec. 21, 1990, as amended at 56 FR 66266, Dec. 20, 1991; Amdt. 173–138, 59 FR 49133, Sept. 26, 1994; 65 FR 58629, Sept. 29, 2000; 66 FR 45380, Aug. 28, 2001; 68 FR 45032, July 31, 2003; 69 FR 76155, Dec. 20, 2004; 71 FR 14602, Mar. 22, 2006; 73 FR 57006, Oct. 1, 2008; 75 FR 53597, Sept. 1, 2010; 76 FR 3368, Jan. 19, 2011; 76 FR 82175, Dec. 30, 2011; 77 FR 22509, Apr. 16, 2012; 78 FR 65479, Oct. 31, 2013]

§ 173.28 Reuse, reconditioning and remanufacture of packagings.

(a) *General.* Packagings and receptacles used more than once must be in such condition, including closure devices and cushioning materials, that they conform in all respects to the prescribed requirements of this subchapter. Before reuse, each packaging must be inspected and may not be reused unless free from incompatible residue, rupture, or other damage which reduces its structural integrity. Packagings not meeting the minimum thickness requirements prescribed in paragraph (b)(4)(i) of this section may not be reused or reconditioned for reuse.

(b) *Reuse of non-bulk packaging.* A non-bulk packaging used more than once must conform to the following provisions and limitations:

(1) A non-bulk packaging which, upon inspection, shows evidence of a reduction in integrity may not be reused unless it is reconditioned in accordance with paragraph (c) of this section.

(2) Before reuse, packagings subject to the leakproofness test with air prescribed in §178.604 of this subchapter shall be—

(i) Retested without failure in accordance with §178.604 of this subchapter using an internal air pressure (gauge) of at least 48 kPa (7.0 psig) for Packing Group I and 20 kPa (3.0 psig) for Packing Group II and Packing Group III; and

(ii) Marked with the letter "L", with the name and address or symbol of the person conducting the test, and the last two digits of the year the test was conducted. Symbols, if used, must be registered with the Associate Administrator.

(3) Packagings made of paper (other than fiberboard), plastic film, or textile are not authorized for reuse;

(4) Metal and plastic drums and jerricans used as single packagings or the outer packagings of composite packagings are authorized for reuse only when they are marked in a permanent manner (e.g., embossed) in mm with the nominal (for metal packagings) or minimum (for plastic packagings) thickness of the packaging material, as required by §178.503(a)(9) of this subchapter, and—

(i) Except as provided in paragraph (b)(4)(ii) of this section, conform to the following minimum thickness criteria:

Maximum capacity not over	Minimum thickness of packaging material	
	Metal drum or jerrican	Plastic drum or jerrican
20 L	0.63 mm (0.025 inch)	1.1 mm (0.043 inch).
30 L	0.73 mm (0.029 inch)	1.1 mm (0.043 inch).
40 L	0.73 mm (0.029 inch)	1.8 mm (0.071 inch).
60 L	0.92 mm (0.036 inch)	1.8 mm (0.071 inch).
120 L	0.92 mm (0.036 inch)	2.2 mm (0.087 inch).
220 L	0.92 mm (0.036 inch) [1].	2.2 mm (0.087 inch).
450 L	1.77 mm (0.070 inch)	5.0 mm (0.197 inch).

[1] Metal drums or jerricans with a minimum thickness of 0.82 mm body and 1.09 mm heads which are manufactured and marked prior to January 1, 1997 may be reused. Metal drums or jerricans manufactured and marked on or after January 1, 1997, and intended for reuse, must be constructed with a minimum thickness of 0.82 mm body and 1.11 mm heads.

(ii) For stainless steel drums and jerricans, conform to a minimum wall thickness as determined by the following equivalence formula:

FORMULA FOR METRIC UNITS

$$e_1 = \frac{21.4 \times e_0}{\sqrt[3]{Rm_1 \times A_1}}$$

FORMULA FOR U.S. STANDARD UNITS

$$e_1 = \frac{21.4 \times e_0}{\sqrt[3]{(Rm_1 \times A_1)/145}}$$

where:

e_1 = required equivalent wall thickness of the metal to be used (in mm or, for U.S. Standard units, use inches).

e_0 = required minimum wall thickness for the reference steel (in mm or, for U.S. Standard units, use inches).

Rm_1 = guaranteed minimum tensile strength of the metal to be used (in N/mm^2 or for U.S. Standard units, use psi).

A_1 = guaranteed minimum elongation (as a percentage) of the metal to be used on fracture under tensile stress (see paragraph (c)(1) of this section).

(5) Plastic inner receptacles of composite packagings must have a minimum thickness of 1.0 mm (0.039 inch).

(6) A previously used non-bulk packaging may be reused for the shipment of hazardous waste, not subject to the reconditioning and reuse provisions of this section, in accordance with §173.12(c).

(7) Notwithstanding the provisions of paragraph (b)(2) of this section, a packaging otherwise authorized for reuse may be reused without being leakproofness tested with air provided the packaging—

(i) Is refilled with a material which is compatible with the previous lading:

(ii) Is refilled and offered for transportation by the original filler;

(iii) Is transported in a transport vehicle or freight container under the exclusive use of the refiller of the packaging; and

(iv) Is constructed of—

(A) Stainless steel, monel or nickel with a thickness not less than one and one-half times the minimum thickness prescribed in paragraph (b)(4) of this section;

(B) Plastic, provided the packaging is not refilled for reuse on a date more than five years from the date of manufacture marked on the packaging in accordance with §178.503(a)(6) of this subchapter; or

(C) Another material or thickness when approved under the conditions established by the Associate Administrator for reuse without retesting.

(c) *Reconditioning of non-bulk packaging.* (1) For the purpose of this subchapter, reconditioning of metal drums is:

(i) Cleaning to base material of construction, with all former contents, internal and external corrosion, and any external coatings and labels removed;

(ii) Restoring to original shape and contour, with chimes (if any) straightened and sealed, and all non-integral gaskets replaced: and

(iii) Inspecting after cleaning but before painting, Packagings that have visible pitting, significant reduction in material thickness, metal fatigue, damaged threads or closures, or other significant defects, must be rejected.

(2) For the purpose of this subchapter, reconditioning of a non-bulk packaging other than a metal drum includes:

(i) Removal of all former contents, external coatings and labels, and cleaning to the original materials of construction;

(ii) Inspection after cleaning with rejection of packagings with visible damage such as tears, creases or cracks, or damaged threads or closures, or other significant defects;

(iii) Replacement of all non-integral gaskets and closure devices with new or refurbished parts, and cushioning and cushioning materials; and components including gaskets, closure devices and cushioning and cushioning material. (For a UN 1H1 plastic drum, replacing a removable gasket or closure device with another of the same design and material that provides equivalent performance does not constitute reconditioning); and

(iv) Ensuring that the packagings are restored to a condition that conforms in all respects with the prescribed requirements of this subchapter.

(3) A person who reconditions a packaging manufactured and marked under the provisions of subpart L of part 178 of this subchapter, shall mark that packaging as required by §178.503(c) and (d) of this subchapter. The marking is the certification of the reconditioner that the packaging conforms to the standard for which it is marked and that all functions performed by the reconditioner which are prescribed by

ED_001691B_00009240

this subchapter have been performed in compliance with this subchapter.

(4) The markings applied by the reconditioner may be different from those applied by the manufacturer at the time of original manufacture, but may not identify a greater performance capability than that for which the original design type had been tested (for example, the reconditioner may mark a drum which was originally marked as 1A1/Y1.8 as 1A1/Y1.2 or 1A1/Z2.0).

(5) Packagings which have significant defects which cannot be repaired may not be reused.

(d) *Remanufacture of non-bulk packagings.* For the purpose of this subchapter, remanufacture is the conversion of a non-specification, non-bulk packaging to a DOT specification or U.N. standard, the conversion of a packaging meeting one specification or standard to another specification or standard (for example, conversion of 1A1 non-removable head drums to 1A2 removable head drums) or the replacement of integral structural packaging components (such as non-removable heads on drums). A person who remanufactures a non-bulk packaging to conform to a specification or standard in part 178 of this subchapter is subject to the requirements of part 178 of this subchapter as a manufacturer.

(e) *Non-reusable containers.* A packaging marked as NRC according to the DOT specification or UN standard requirements of part 178 of this subchapter may be reused for the shipment of any material not required by this subchapter to be shipped in a DOT specification or UN standard packaging.

(f) A Division 6.2 packaging to be reused must be disinfected prior to reuse by any means effective for neutralizing the infectious substance the packaging previously contained. A secondary packaging or outer packaging conforming to the requirements of § 173.196 or § 173.199 need not be disinfected prior to reuse if no leakage from the primary receptacle has occurred. Drums or jerricans not meeting the minimum thickness requirements prescribed in paragraph (b)(4)(i) of this section may not be reused or reconditioned for reuse.

[Amdt. 173–224, 55 FR 52614, Dec. 21, 1990]

EDITORIAL NOTE: For FEDERAL REGISTER citations affecting § 173.28, see the List of CFR Sections Affected, which appears in the Finding Aids section of the printed volume and at *www.fdsys.gov*.

§ 173.29 Empty packagings.

(a) General. Except as otherwise provided in this section, an empty packaging containing only the residue of a hazardous material shall be offered for transportation and transported in the same manner as when it previously contained a greater quantity of that hazardous material.

(b) Notwithstanding the requirements of paragraph (a) of this section, an empty packaging is not subject to any other requirements of this subchapter if it conforms to the following provisions:

(1) Any hazardous material shipping name and identification number markings, any hazard warning labels or placards, and any other markings indicating that the material is hazardous (e.g., RQ, INHALATION HAZARD) are removed, obliterated, or securely covered in transportation. This provision does not apply to transportation in a transport vehicle or a freight container if the packaging is not visible in transportation and the packaging is loaded by the shipper and unloaded by the shipper or consignee;

(2) The packaging—

(i) Is unused;

(ii) Is sufficiently cleaned of residue and purged of vapors to remove any potential hazard;

(iii) Is refilled with a material which is not hazardous to such an extent that any residue remaining in the packaging no longer poses a hazard; or

(iv) Contains only the residue of—

(A) An ORM-D material; or

(B) A Division 2.2 non-flammable gas, other than ammonia, anhydrous, and with no subsidiary hazard, at a gauge pressure less than 200 kPa (29.0 psig); at 20 °C (68 °F); and

(3) Any material contained in the packaging does not meet the definitions in § 171.8 of this subchapter for a hazardous substance, a hazardous waste, or a marine pollutant.

ED_001691B_00009240

(c) A non-bulk packaging containing only the residue of a hazardous material covered by Table 2 of §172.504 of this subchapter that is not a material poisonous by inhalation or its residue shipped under the subsidiary placarding provisions of §172.505—

(1) Does not have to be included in determining the applicability of the placarding requirements of subpart F of part 172 of this subchapter; and

(2) Is not subject to the shipping paper requirements of this subchapter when collected and transported by a contract or private carrier for reconditioning, remanufacture or reuse.

(d) Notwithstanding the stowage requirements in Column 10a of the §172.101 table for transportation by vessel, an empty drum or cylinder may be stowed on deck or under deck.

(e) Specific provisions for describing an empty packaging on a shipping paper appear in §172.203(e) of this subchapter.

(f) [Reserved]

(g) A package which contains a residue of an elevated temperature material may remain marked in the same manner as when it contained a greater quantity of the material even though it no longer meets the definition in §171.8 of this subchapter for an elevated temperature material.

(h) A package that contains a residue of a hazardous substance, Class 9, listed in the §172.101 Table, Appendix A, Table I, that does not meet the definition of another hazard class and is not a hazardous waste or marine pollutant, may remain marked, labeled and, if applicable, placarded in the same manner as when it contained a greater quantity of the material even though it no longer meets the definition in §171.8 of this subchapter for a hazardous substance.

[Amdt. 173–224, 55 FR 52614, Dec. 21, 1990, as amended by Amdt. 173–227, 56 FR 49989, Oct. 2, 1991; Amdt. 173–231, 57 FR 52939, Nov. 5, 1992; Amdt. 173–251, 61 FR 28676, June 5, 1996; Amdt. 173–260, 62 FR 1236, Jan. 8, 1997; 64 FR 10776, Mar. 5, 1999; 68 FR 48569, Aug. 14, 2003; 69 FR 64473, Nov. 4, 2004; 75 FR 72, Jan. 4, 2010]

§ 173.30 Loading and unloading of transport vehicles.

A person who is subject to the loading and unloading regulations in this subchapter must load or unload hazardous materials into or from a transport vehicle or vessel in conformance with the applicable loading and unloading requirements of parts 174, 175, 176, and 177 of this subchapter.

[68 FR 61941, Oct. 30, 2003]

§ 173.31 Use of tank cars.

(a) *General.* (1) No person may offer a hazardous material for transportation in a tank car unless the tank car meets the applicable specification and packaging requirements of this subchapter or, when this subchapter authorizes the use of a non-DOT specification tank car, the applicable specification to which the tank was constructed.

(2) Tank cars and appurtenances may be used for the transportation of any commodity for which they are authorized in this part and specified on the certificate of construction (AAR Form 4–2 or by addendum on Form R–1). See §179.5 of this subchapter. Transfer of a tank car from one specified service on its certificate of construction to another may be made only by the owner or with the owner's authorization. A tank car proposed for a commodity service other than specified on its certificate of construction must be approved for such service by the AAR's Tank Car Committee.

(3) No person may fill a tank car overdue for periodic inspection with a hazardous material and then offer it for transportation. Any tank car marked as meeting a DOT specification and any non-specification tank car transporting a hazardous material must have a periodic inspection and test conforming to subpart F of part 180 of this subchapter.

(4) No railroad tank car, regardless of its construction date, may be used for the transportation in commerce of any hazardous material unless the air brake equipment support attachments of such tank car conform to the standards for attachments set forth in §§179.100–16 and 179.200–19 of this subchapter.

(5) No railroad tank car, regardless of its construction date, may be used for the transportation in commerce of any hazardous material with a self-energized manway located below the liquid level of the lading.

ED_001691B_00009240

(6) Unless otherwise specifically provided in this part:

(i) When the tank car delimiter is an "A," offerors may also use tank cars with a delimiter "S," "J" or "T".

(ii) When the tank car delimiter is an "S," offerors may also use tank cars with a delimiter "J" or "T".

(iii) When a tank car delimiter is a "T" offerors may also use tank cars with a delimiter of "J".

(iv) When a tank car delimiter is a "J", offerors may not use a tank car with any other delimiter.

(7) A class DOT-103 or DOT-104 tank car may continue to be used for the transportation of a hazardous material if it meets the requirements of this subchapter and the design requirements in part 179 of this subchapter in effect on September 30, 2003; however, no new construction is authorized.

(8) A tank car authorized by the Transport Canada TDG Regulations (IBR, see §171.7 of this subchapter) may be used provided it conforms to the applicable requirements in §171.12 of this subchapter.

(b) *Safety systems*—(1) *Coupler vertical restraint.* Each tank car conforming to a DOT specification and any other tank car used for transportation of a hazardous material must be equipped with a coupler vertical restraint system that meets the requirements of §179.14 of this subchapter.

(2) *Pressure relief devices.* (i) Pressure relief devices on tank cars must conform to part 179 of this subchapter.

(ii) A single-unit tank car transporting a Division 6.1 PG I or II, or Class 2, 3, or 4 material must have a reclosing pressure relief device. However, a single-unit tank car built before January 1, 1991, and equipped with a nonreclosing pressure relief device may be used to transport a Division 6.1 PG I or II material or a Class 4 liquid provided such materials do not meet the definition of a material poisonous by inhalation.

(3) *Tank-head puncture-resistance requirements.* The following tank cars must have a tank-head puncture-resistance system that conforms to the requirements in §179.16 of this subchapter, or to the corresponding requirements in effect at the time of installation:

(i) Tank cars transporting a Class 2 material.

(ii) Tank cars constructed from aluminum or nickel plate that are used to transport hazardous material.

(iii) Except as provided in paragraph (b)(3)(iv) of this section, those tank cars specified in paragraphs (b)(3)(i) and (ii) of this section not requiring a tank-head puncture resistance system prior to July 1, 1996, must have a tank-head puncture resistance system installed no later than July 1, 2006.

(iv) Class DOT 105A tank cars built prior to September 1, 1981, having a tank capacity less than 70 kl (18,500 gallons), and used to transport a Division 2.1 (flammable gas) material, must have a tank-head puncture-resistant system installed no later than July 1, 2001.

(4) *Thermal protection requirements.* The following tank cars must have thermal protection that conforms to the requirements of §179.18 of this subchapter:

(i) Tank cars transporting a Class 2 material, except for a class 106, 107A, 110, and 113 tank car. A tank car equipped with a thermal protection system conforming to §179.18 of this subchapter, or that has an insulation system having an overall thermal conductance of no more than 0.613 kilojoules per hour, per square meter, per degree Celsius temperature differential (0.03 B.t.u. per square foot, per hour, per degree Fahrenheit temperature differential), conforms to this requirement.

(ii) A tank car transporting a Class 2 material that was not required to have thermal protection prior to July 1, 1996, must be equipped with thermal protection no later than July 1, 2006.

(5) *Bottom-discontinuity protection requirements.* No person may offer for transportation a hazardous material in a tank car with bottom-discontinuity protection unless the tank car has bottom-discontinuity protection that conforms to the requirements of E9.00 and E10.00 of the AAR Specifications for Tank Cars (IBR, see §171.7 of this subchapter). Tank cars not requiring bottom-discontinuity protection under the terms of Appendix Y of the AAR Specifications for Tank Cars as of July 1,

ED_001691B_00009240

1996, must conform to these requirements no later than July 1, 2006, except that tank cars transporting a material that is hazardous only because it meets the definition of an elevated temperature material or because it is molten sulfur do not require bottom discontinuity protection.

(6) *Scheduling of modifications and progress reporting.* The date of conformance for the continued use of tank cars subject to paragraphs (b)(4), (b)(5), and (f) of this section and § 173.314(j) is subject to the following conditions and limitations.

(i) Each tank car owner shall modify, reassign, retire, or remove at least 50 percent of their in-service tank car fleet within the first half of the compliance period and the remainder of their in-service tank car fleet during the second half of the compliance period.

(ii) By October 1 of each year, each owner of a tank car subject to this paragraph (b)(6) shall submit to the Federal Railroad Administration, Hazardous Materials Division, Office of Safety Assurance and Compliance, 1120 Vermont Avenue, Mail Stop 25, Washington, DC 20590, a progress report that shows the total number of in-service tank cars that need head protection, thermal protection, or bottom-discontinuity protection; the number of new or different tank cars acquired to replace those tank cars required to be upgraded to a higher service pressure; and the total number of tank cars modified, reassigned, acquired, retired, or removed from service the previous year.

(c) *Tank car test pressure.* A tank car used for the transportation of a hazardous material must have a tank test pressure equal to or greater than the greatest of the following:

(1) Except for shipments of carbon dioxide, anhydrous hydrogen chloride, vinyl fluoride, ethylene, or hydrogen, 133 percent of the sum of lading vapor pressure at the reference temperature of 46 °C (115 °F) for non-insulated tank cars or 41 °C (105 °F) for insulated tank cars plus static head, plus gas padding pressure in the vacant space of a tank car;

(2) 133 percent of the maximum loading or unloading pressure, whichever is greater;

(3) 20.7 Bar (300 psig) for materials that are poisonous by inhalation (see § 173.31(e)(2)(ii) for compliance dates);

(4) The minimum pressure prescribed by the specification in part 179 of this subchapter; or

(5) The minimum test pressure prescribed for the specific hazardous material in the applicable packaging section in subpart F or G of this part.

(d) *Examination before shipping.* (1) No person may offer for transportation a tank car containing a hazardous material or a residue of a hazardous material unless that person determines that the tank car is in proper condition and safe for transportation. As a minimum, each person offering a tank car for transportation must perform an external visual inspection that includes:

(i) Except where insulation or a thermal protection system precludes an inspection, the tank shell and heads for abrasion, corrosion, cracks, dents, distortions, defects in welds, or any other condition that makes the tank car unsafe for transportation;

(ii) The piping, valves, fittings, and gaskets for corrosion, damage, or any other condition that makes the tank car unsafe for transportation;

(iii) For missing or loose bolts, nuts, or elements that make the tank car unsafe for transportation;

(iv) All closures on tank cars and determine that the closures and all fastenings securing them are properly tightened in place by the use of a bar, wrench, or other suitable tool;

(v) Protective housings for proper securement;

(vi) The pressure relief device, including a careful inspection of the rupture disc in non-reclosing pressure relief devices, for corrosion or damage that may alter the intended operation of the device. The rupture disc is not required to be removed prior to visual inspection if the tank car contains the residue, as defined in § 171.8 of this subchapter, of a Class 8, PG II or PG III material with no subsidiary hazard or the residue of a Class 9 elevated temperature material;

(vii) Each tell-tale indicator after filling and prior to transportation to

ED_001691B_00009240

ensure the integrity of the rupture disc;

(viii) The external thermal protection system, tank-head puncture resistance system, coupler vertical restraint system, and bottom discontinuity protection for conditions that make the tank car unsafe for transportation;

(ix) The required markings on the tank car for legibility; and

(x) The periodic inspection date markings to ensure that the inspection and test intervals are within the prescribed intervals.

(2) Closures on tank cars are required, in accordance with this subchapter, to be designed and closed so that under conditions normally incident to transportation, including the effects of temperature and vibration, there will be no identifiable release of a hazardous material to the environment. In any action brought to enforce this section, the lack of securement of any closure to a tool-tight condition, detected at any point, will establish a rebuttable presumption that a proper inspection was not performed by the offeror of the car. That presumption may be rebutted by any evidence indicating that the lack of securement resulted from a specific cause not within the control of the offeror.

(e) *Special requirements for materials poisonous by inhalation*—(1) *Interior heater coils.* Tank cars used for materials poisonous by inhalation may not have interior heater coils.

(2) Tank car specifications. A tank car used for a material poisonous by inhalation must have a tank test pressure of 20.7 Bar (300 psig) or greater, head protection, and a metal jacket (e.g., DOT 105S300W), except that—

(i) A higher test pressure is required if otherwise specified in this subchapter; and

(ii) Each tank car constructed on or after March 16, 2009, and used for the transportation of PIH materials must meet the applicable authorized tank car specifications and standards listed in § 173.244(a)(2) or (3) and § 173.314(c) or (d).

(iii) A tank car meeting the applicable authorized tank car specifications listed in § 173.244(a)(2) or (3), or § 173.314(c) or (d) is authorized for the transportation of a material poisonous by inhalation for a period of 20 years after the date of original construction.

(iv) A tank car owner retiring or otherwise removing a tank car from service transporting materials poisonous by inhalation, other than because of damage to the car, must retire or remove cars constructed of non-normalized steel in the head or shell before removing any car in service transporting materials poisonous by inhalation constructed of normalized steel meeting the applicable DOT specification.

(f) *Special requirements for hazardous substances.* (1) A tank car used for a hazardous substance listed in paragraph (f)(2) of this section must have a tank test pressure of at least 13.8 Bar (200 psig), head protection and a metal jacket, except that—

(i) No metal jacket is required if—

(A) The tank test pressure is 23.4 Bar (340 psig) or higher; or

(B) The tank shell and heads are manufactured from AAR steel specification TC–128, normalized;

(ii) A higher test pressure is required if otherwise specified in this subchapter; and

(iii) Other than as provided in paragraph (b)(6) of this section, a tank car which does not conform to the requirements of this paragraph (f)(1), and was authorized for a hazardous substance under the regulations in effect on June 30, 1996, may continue in use until July 1, 2006.

(2) *List of hazardous substances.* Hazardous substances for which the provisions of this paragraph (f) apply are as follows:

Aldrin
Allyl chloride
alpha-BHC
beta-BHC
delta-BHC
gamma-BHC
Bis(2-chloroethyl) ether
Bromoform
Carbon tetrachloride
Chlordane
p-Chloroaniline
Chlorobenzene
Chlorobenzilate
p-Chloro-m-cresol
2-Chloroethyl vinyl ether
Chloroform
2-Chloronapthalene
o-Chlorophenol
3-Chloropropionitrile

ED_001691B_00009240

DDE
DDT
1,2-Dibromo-3-chloropropane
m-Dichlorobenzene
o-Dichlorobenzene
p-Dichlorobenzene
3,3'-Dichlorobenzidine
1,4-Dichloro-2-butene
1,1-Dichloroethane
1,2-Dichloroethane
1,1-Dichloroethylene
Dichloroisopropyl ether
Dichloromethane @
2,4-Dichlorophenol
2,6-Dichlorophenol
1,2-Dichloropropane
1,3-Dichloropropene
Dieldrin
alpha-Endosulfan
beta-Endosulfan
Endrin
Endrin aldehyde
Heptachlor
Heptachlor epoxide
Hexachlorobenzene
Hexachlorobutadiene
Hexachloroethane
Hexachlorophene
Hexachloropropene
Isodrin
Kepone
Methoxychlor
4,4'-Methylenebis(2-chloroaniline)
Methylene bromide
Pentachlorobenzene
Pentachloroethane
Pentachloronitrobenzene (PCNB)
Pentachlorophenol
Polychlorinated biphenyls (PCBs)
Pronamide
Silvex (2,4,5-TP)
2,4,5-T
TDE
1,2,4,5-Tetrachlorobenzene
2,3,7,8-Tetrachlorodibenzo-p-dioxin (TCDD)
Tetrachloroethane
Tetrachloroethylene
2,3,4,6-Tetrachlorophenol
Toxaphene
1,2,4-Trichlorobenzene
1,1,1-Trichloroethane
1,1,2-Trichloroethane
Trichloroethylene
2,4,5-Trichlorophenol
2,4,6-Trichlorophenol
Tris(2,3-dibromopropyl) phosphate

(g) *Tank car loading and unloading.* When placed for loading or unloading and before unsecuring any closure, a tank car must be protected against movement or coupling as follows:

(1) Each hazmat employee who is responsible for loading or unloading a tank car must secure access to the track to prevent entry by other rail equipment, including motorized service vehicles. Derails, lined and locked switches, portable bumper blocks, or other equipment that provides an equivalent level of security may be used to satisfy this requirement.

(2) Caution signs must be displayed on the track or on the tank cars to warn persons approaching the cars from the open end of the track and must be left up until after all closures are secured and the cars are in proper condition for transportation. The caution signs must be of metal or other durable material, rectangular, at 30.48 cm (12 inches) high by 38.10 cm (15 inches) wide, and bear the word "STOP." The word "STOP" must appear in letters at least 10.16 cm (4 inches) high. The letters must be white on a blue background. Additional words, such as "Tank Car Connected" or "Crew at Work," may also appear in white letters under the word "STOP."

(3) At least one wheel on the tank car must be blocked against movement in both directions, and the hand brakes must be set. If multiple tank cars are coupled together, sufficient hand brakes must be set and wheels blocked to prevent movement in both directions.

[Amdt. 173–245, 60 FR 49072, Sept. 21, 1995, as amended by Amdt. 173–245, 61 FR 33254, June 26, 1996; Amdt. 173–256, 61 FR 51338, Oct. 1, 1996; 65 FR 58629, Sept. 29, 2000; 66 FR 33427, June 21, 2001; 66 FR 45379, 45381, Aug. 28, 2001; 68 FR 48569, Aug. 14, 2003; 68 FR 75743, Dec. 31, 2003; 68 FR 61941, Oct. 30, 2003; 70 FR 34075, June 13, 2005; 72 FR 25176, May 3, 2007; 72 FR 55692, Oct. 1, 2007; 74 FR 1799, Jan. 13, 2009; 75 FR 27215, May 14, 2010]

§ 173.32 Requirements for the use of portable tanks.

(a) *General requirements.* No person may offer a hazardous material for transportation in a portable tank except as authorized by this subchapter.

(1) Except as otherwise provided in this subpart, no person may use a portable tank for the transportation of a hazardous material unless it meets the requirements of this subchapter.

(2) No person may fill and offer for transportation a portable tank when the prescribed periodic test or inspection under subpart G of part 180 of this subchapter has become due until the test or inspection has been successfully completed. This requirement does not

ED_001691B_00009240

apply to any portable tank filled prior to the test or inspection due date.

(3) When a portable tank is used as a cargo tank motor vehicle, it must conform to all the requirements prescribed for cargo tank motor vehicles. (See § 173.33.)

(b) *Substitute packagings.* A particular Specification portable tank may be substituted for another portable tank as follows:

(1) An IM or UN portable tank may be used whenever an IM or UN portable tank having less stringent requirements is authorized provided the portable tank meets or exceeds the requirements for pressure-relief devices, bottom outlets and any other special provisions specified in § 172.102(c)(7)(vi) of this subchapter.

(2) Where a Specification IM101 or IM102 portable tank is prescribed, a UN portable tank or Specification 51 portable tank otherwise conforming to the special commodity requirements of § 172.102(c)(7) of this subchapter for the material to be transported may be used.

(3) A DOT Specification 51 portable tank may be used whenever a DOT Specification 56, 57, or 60 portable tank is authorized. A DOT Specification 60 portable tank may be used whenever a DOT Specification 56 or 57 portable tank is authorized. A higher integrity tank used instead of a specified portable tank must meet the same design profile; for example, a DOT Specification 51 portable tank must be lined if used instead of a lined DOT Specification 60 portable tank.

(4) A portable tank authorized by the Transport Canada TDG Regulations (IBR, see § 171.7 of this subchapter) may be used provided it conforms to the applicable requirements in § 171.12 of this subchapter.

(c) *Grandfather provisions for portable tanks*—(1) *Continued use of Specification 56 and 57 portable tanks.* Continued use of an existing portable tank constructed to DOT Specification 56 or 57 is authorized only for a portable tank constructed before October 1, 1996. A stainless steel portable tank internally lined with polyethylene that was constructed on or before October 1, 1996, and that meets all requirements of DOT Specification 57 except for being equipped with a polypropylene discharge ball valve and polypropylene secondary discharge opening closure, may be marked as a Specification 57 portable tank and used in accordance with the provisions of this section.

(2) A DOT Specification 51, IM 101, or IM 102 portable tank may not be manufactured after January 1, 2003; however, such tanks may continue to be used for the transportation of a hazardous material provided they meet the requirements of this subchapter, including the specification requirements and the requirements of this subchapter for the transportation of the particular hazardous material according to the T codes in effect on September 30, 2001 or the new T codes in § 172.102(c)(7)(i), and provided the portable tanks conform to the periodic inspection and tests specified for the particular portable tank in subpart G of part 180 of this subchapter. After January 1, 2003, all newly manufactured portable tanks must conform to the requirements for the design, construction and approval of UN portable tanks as specified in §§ 178.273, 178.274, 178.275, 178.276, 178.277 and part 180, subpart G, of this subchapter.

(3) A DOT Specification portable tank manufactured prior to January 1, 1992 that is equipped with a non-reclosing pressure relief device may continue in service for the hazardous materials for which it is authorized. Except for a DOT Specification 56 or 57 portable tank, a DOT Specification portable tank manufactured after January 1, 1992, used for materials meeting the definition for Division 6.1 liquids, Packing Group I or II, Class 2 gases, or Class 3 or 4 liquids, must be equipped with a reclosing pressure relief valve having adequately sized venting capacity unless otherwise specified in this subchapter (see §§ 178.275(f)(1) and 178.277 of this subchapter).

(4) Any portable tank container constructed prior to May 15, 1950, complying with the requirements of either the ASME Code for Unfired Pressure Vessels, 1946 Edition, or the API ASME Code for Unfired Pressure Vessels, 1943 Edition, may be used for the transportation of liquefied compressed gas, provided it fulfills all the requirements of

ED_001691B_00009240

the part and specifications for the particular gas or gases to be transported. Such portable tanks must be marked "ICC Specification 51X" on the plate required by the specification, except as modified by any or all of the following:

(i) Portable tanks designed and constructed in accordance with Pars. U–68, U–69, or U–201 of the ASME Code, 1943 and 1946 editions, may be used. Portable tanks designed and constructed in accordance with Par. U–68 or Par. U–69 may be re-rated at a working pressure 25 percent in excess of the design pressure for which the portable tank was originally constructed. If the portable tank is re-rated, the re-rated pressure must be marked on the plate as follows: "Re-rated working pressure—psig".

(ii) Loading and unloading accessories, valves, piping, fittings, safety and gauging devices, do not have to comply with the requirements for the particular location on the portable tank.

(5) Any ICC Specification 50 portable tank fulfilling the requirements of that specification may be continued in service for transportation of a liquefied petroleum gas if it is retested every five years in accordance with the requirements in § 180.605 of this subchapter. Use of existing portable tanks is authorized. New construction is not authorized.

(d) *Determination of an authorized portable tank.* Prior to filling and offering a portable tank for transportation, the shipper must ensure that the portable tank conforms to the authorized specification and meets the applicable requirements in this subchapter for the hazardous material. The shipper must ensure that the MAWP, design pressure or test pressure of the portable tank, as applicable, is appropriate for the hazardous material being transported. Determination of the applicable pressure must take into account the maximum pressure used to load or unload the hazardous material, the vapor pressure, static head and surge pressures of the hazardous material and the temperatures that the hazardous material will experience during transportation.

(e) *External inspection prior to filling.* Each portable tank must be given a complete external inspection prior to filling. Any unsafe condition must be corrected prior to its being filled and offered for transportation. The external inspection shall include a visual inspection of:

(1) The shell, piping, valves and other appurtenances for corroded areas, dents, defects in welds and other defects such as missing, damaged, or leaking gaskets;

(2) All flanged connections or blank flanges for missing or loose nuts and bolts;

(3) All emergency devices for corrosion, distortion, or any damage or defect that could prevent their normal operation;

(4) All required markings on the tank for legibility; and

(5) Any device for tightening manhole covers to ensure such devices are operative and adequate to prevent leakage at the manhole cover.

(f) *Loading requirements.* (1) A hazardous material may not be loaded into a portable tank if the hazardous material would:

(i) Damage the portable tank;

(ii) React with the portable tank; or

(iii) Otherwise compromise its product retention capability.

(2) A hazardous material may not be loaded in a DOT Specification 51, DOT Specification 60, an IM or UN portable tank unless the portable tank has a pressure relief device that provides total relieving capacity meeting the requirements of this subchapter.

(3) Except during a pressure test, a portable tank may not be subjected to a pressure greater than its marked maximum allowable working pressure or, when appropriate, its marked design pressure.

(4) A portable tank may not be loaded to a gross mass greater than the maximum allowable gross mass specified on its identification plate.

(5) Except for a non-flowable solid or a liquid with a viscosity of 2,680 centistokes (millimeters squared per second) or greater at 20 °C (68 °F), an IM or UN portable tank, or compartment thereof, having a volume greater than 7,500 L (1,980 gallons) may not be loaded to a filling density of more than 20% and less than 80% by volume. This filling restriction does not apply if a portable tank is divided by partitions

ED_001691B_00009240

or surge plates into compartments of not more than 7,500 L (1,980 gallons) capacity; this portable tank must not be offered for transportation in an ullage condition liable to produce an unacceptable hydraulic force due to surge.

(6) The outage for a portable tank may not be less than 2% at a temperature of 50 °C (122 °F) unless otherwise specified in this subchapter. For UN portable tanks, the applicable maximum filling limits apply as specified according to the assigned TP codes in Column (7) of the § 172.101 Table of this subchapter except when transported domestically.

(7) Each tell-tale indicator or pressure gauge located in the space between a frangible disc and a safety relief valve mounted in series must be checked after the tank is filled and prior to transportation to ensure that the frangible disc is leak free. Any leakage through the frangible disc must be corrected prior to offering the tank for transportation.

(8) During filling, the temperature of the hazardous materials shall not exceed the limits of the design temperature range of the portable tank.

(9) The maximum mass of liquefied compressed gas per liter (gallon) of shell capacity (kg/L or lbs./gal.) may not exceed the density of the liquefied compressed gas at 50 °C (122 °F). The portable tank must not be liquid full at 60 °C (140 °F).

(g) *Additional requirements for specific modal transport.* In addition to other applicable requirements, the following apply:

(1) A portable tank containing a hazardous material may not be loaded onto a highway or rail transport vehicle unless loaded entirely within the horizontal outline of the vehicle, without overhang or projection of any part of the tank assembly.

(2) An IM or UN portable tank used for the transportation of flammable liquids by rail may not be fitted with non-reclosing pressure relief devices except in series with reclosing pressure relief valves.

(3) A portable tank or Specification 106A or 110A multi-unit tank car containing a hazardous material may not be offered for transportation aboard a passenger vessel unless:

(i) The vessel is operating under a change to its character of vessel certification as defined in § 171.8 of this subchapter; and

(ii) The material is permitted to be transported aboard a passenger vessel in the § 172.101 Table of this subchapter.

(h) *Additional general commodity-specific requirements.* In addition to other applicable requirements, the following requirements apply:

(1) Each uninsulated portable tank used for the transportation of a liquefied compressed gas must have an exterior surface finish that is significantly reflective, such as a light-reflecting color if painted, or a bright reflective metal or other material if unpainted.

(2) If a hazardous material is being transported in a molten state, the portable tank must be thermally insulated with suitable insulation material of sufficient thickness that the overall thermal conductance is not more than 0.080 Btu per hour per square foot per degree Fahrenheit differential.

(3) No person may offer a liquid hazardous material of Class 3, PG I or II, or PG III with a flash point of less than 100 °F (38 °C); Division 5.1, PG I or II; or Division 6.1, PG I or II, in an IM or UN portable tank that is equipped with a bottom outlet as authorized in Column (7) of the § 172.101 Table of this subchapter by assignment of a T Code in the appropriate proper shipping name entry, for unloading to a facility while it remains on a transport vehicle with the power unit attached unless—

(i) The tank outlets conform to § 178.275(d)(3) of this subchapter; or

(ii) The facility at which the IM or UN portable tank is to be unloaded conforms to the requirements in § 177.834(o) of this subchapter.

(i) *Additional requirements for portable tanks other than IM specification and UN portable tanks.* (1) The bursting strength of any piping and fittings must be at least four times the design pressure of the tank, and at least four times the pressure to which, in any instance, it may be subjected in service by the action of a pump or other device (not including safety relief valves) that may subject piping to pressures greater than the design pressure of the tank.

(2) Pipe joints must be threaded, welded or flanged. If threaded pipe is

ED_001691B_00009240

used, the pipe and pipe fittings must not be lighter than Schedule 80 weight. Where copper tubing is permitted, joints must be brazed or be of equally strong metal union type. The melting point of brazing material may not be lower than 1,000 °F (537.8 °C). The method of joining tubing must not decrease the strength of the tubing such as by the cutting of threads.

(3) Non-malleable metals may not be used in the construction of valves or fittings.

(4) Suitable provision must be made in every case to allow for expansion, contraction, jarring and vibration of all pipe. Slip joints may not be used for this purpose.

(5) Piping and fittings must be grouped in the smallest practicable space and must be protected from damage as required by the specification.

(6) All piping, valves and fittings on every portable tank must be leakage tested with gas or air after installation and proved tight at not less than the design pressure of the portable tank on which they are used. In the event of replacement, all such piping, valves, or fittings must be tested in accordance with the requirements of this section before the portable tank is returned to transportation service. The requirements of this section apply to all hoses used on portable tanks, except that hoses may be tested either before or after installation on the portable tank.

(7) All materials used in the construction of portable tanks and their appurtenances may not be subject to destructive attack by the contents of the portable tank.

(8) No aluminum, copper, silver, zinc nor their alloys may be used. Brazed joints may not be used. All parts of a portable tank and its appurtenances used for anhydrous ammonia must be steel.

(9) Each outlet of a portable tank used for the transportation of non-refrigerated liquefied compressed gases, except carbon dioxide, must be provided with a suitable automatic excess-flow valve (see definition in § 178.337–1(g) of this subchapter). The valve must be located inside the portable tank or at a point outside the portable tank where the line enters or leaves the portable tank. The valve seat must be located inside the portable tank or may be located within a welded flange or its companion flange, or within a nozzle or within a coupling. The installation must be made in such a manner as to reasonably assure that any undue strain which causes failure requiring functioning of the valve shall cause failure in such a manner that it will not impair the operation of the valve.

(i) A safety device connection or liquid level gauging device that is constructed so that the outward flow of the tank contents will not exceed that passed by an opening of 0.1397 cm (0.0550 inches) is not required to be equipped with excess-flow valves.

(ii) An excess-flow valve must close automatically if the flow reaches the rated flow of gas or liquid specified by the original valve manufacturer when piping mounted directly on the valve is sheared off before the first valve, pump, or fitting downstream from the excess flow valve.

(iii) An excess-flow valve may be designed with a by-pass, not to exceed a 0.1016 cm (0.040 inches) diameter opening to allow equalization of pressure.

(iv) Filling and discharge lines must be provided with manually operated shut-off valves located as close to the tank as practical. Unless this valve is manually operable at the valve, the line must also have a manual shut-off valve. The use of "Stop-Check" valves to satisfy with one valve the requirements of this section is forbidden. For portable tanks used for refrigerated liquefied gases, a "stop check" valve may be used on the vapor side of the pressure buildup circuit.

(10) Each portable tank used for carbon dioxide or nitrous oxide must be lagged with a suitable insulation material of such thickness that the overall thermal conductance is not more than 0.08 Btu per square foot per degree Fahrenheit differential in temperature per hour. The conductance must be determined at 60 °Fahrenheit. Insulation material used on portable tanks for nitrous oxide must be noncombustible.

(11) Refrigerating or heating coils must be installed in portable tanks used for carbon dioxide and nitrous oxide. Such coils must be tested externally to at least the same pressure as the test pressure of the portable tank.

ED_001691B_00009240

The coils must also be tested internally to at least twice the working pressure of the heating or refrigerating system to be used, but in no case less than the test pressure of the portable tank. Such coils must be securely anchored. In the event of leakage, the refrigerant or heating medium to be circulated through the coil or coils must have no adverse chemical reaction with the portable tank or its contents.

(12) Excess flow valves are not required for portable tanks used for the transport of refrigerated liquefied gases.

[66 FR 33427, June 21, 2001, as amended at 67 FR 15743, Apr. 3, 2002; 68 FR 32413, May 30, 2003; 68 FR 57632, Oct. 6, 2003; 68 FR 75742, 75743, Dec. 31, 2003; 69 FR 54046, Sept. 7, 2004; 72 FR 25176, May 3, 2007; 76 FR 81400, Dec. 28, 2011]

§ 173.33 Hazardous materials in cargo tank motor vehicles.

(a) *General requirements.* (1) No person may offer or accept a hazardous material for transportation in a cargo tank motor vehicle except as authorized by this subchapter.

(2) Two or more materials may not be loaded or accepted for transportation in the same cargo tank motor vehicle if, as a result of any mixture of the materials, an unsafe condition would occur, such as an explosion, fire, excessive increase in pressure or heat, or the release of toxic vapors.

(3) No person may fill and offer for transportation a specification cargo tank motor vehicle for which the prescribed periodic retest or reinspection under subpart E of part 180 of this subchapter is past due until the retest or inspection has been successfully completed. This requirement does not apply to a cargo tank supplied by a motor carrier who is other than the person offering the hazardous material for transportation (see § 180.407(a)(1) of this subchapter), or to any cargo tank filled prior to the retest or inspection due date.

(b) *Loading requirements.* (1) A hazardous material may not be loaded in a cargo tank if during transportation any part of the tank in contact with the hazardous material lading would have a dangerous reaction with the hazardous material.

(2) A cargo tank may not be loaded with a hazardous material that will have an adverse effect on the tank's integrity or—

(i) May combine chemically with any residue or contaminants in the tank to produce an explosion, fire, excessive increase in pressure, release of toxic vapors or other unsafe condition.

(ii)–(iii) [Reserved]

(iv) May severely corrode or react with the tank material at any concentration and temperature that will exist during transportation.

(v) Is prohibited by § 173.21 or § 173.24 of this subchapter.

(3) Air pressure in excess of ambient atmospheric pressure may not be used to load or unload any lading which may create an air-enriched mixture within the flammability range of the lading in the vapor space of the tank.

(4) To prevent cargo tank rupture in a loading or unloading accident, the loading or unloading rate used must be less than or equal to that indicated on the cargo tank specification plate, except as specified in § 173.318(b)(6). If no loading or unloading rate is marked on the specification plate, the loading or unloading rate and pressure used must be limited such that the pressure in the tank may not exceed 130% of the MAWP.

(c) *Maximum Lading Pressure.* (1) Prior to loading and offering a cargo tank motor vehicle for transportation with material that requires the use of a specification cargo tank, the person must confirm that the cargo tank motor vehicle conforms to the specification required for the lading and that the MAWP of the cargo tank is greater than or equal to the largest pressure obtained under the following conditions:

(i) For compressed gases and certain refrigerated liquids that are not cryogenic liquids, the pressure prescribed in § 173.315 of this subchapter.

(ii) For cryogenic liquids, the pressure prescribed in § 173.318 of this subchapter.

(iii) For liquid hazardous materials loaded in DOT specification cargo tanks equipped with a 1 psig normal vent, the sum of the tank static head plus 1 psig. In addition, for hazardous materials loaded in these cargo tanks,

ED_001691B_00009240

the vapor pressure of the lading at 115 °F must be not greater than 1 psig, except for gasoline transported in accordance with Special Provision B33 in §172.102(c)(3) of this subchapter.

(iv) For liquid hazardous materials not covered in paragraph (c)(1)(i), (ii), or (iii) of this section, the sum of the vapor pressure of the lading at 115 °F, plus the tank static head exerted by the lading, plus any pressure exerted by the gas padding, including air in the ullage space or dome.

(v) The pressure prescribed in subpart B, D, E, F, G, or H of this part, as applicable.

(vi) The maximum pressure in the tank during loading or unloading.

(2) Any Specification MC 300, MC 301, MC 302, MC 303, MC 305, MC 306 or MC 312, cargo tank motor vehicle with no marked design pressure or marked with a design pressure of 3 psig or less may be used for an authorized lading where the pressure derived from §173.33(c)(1) is less than or equal to 3 psig. After December 31, 1990, a cargo tank may not be loaded and offered for transportation unless marked or remarked with an MAWP or design pressure in accordance with 49 CFR 180.405(k).

(3) Any Specification MC 310 or MC 311 cargo tank motor vehicle may be used for an authorized lading where the pressure derived from §173.33(c)(1) is less than or equal to the MAWP or MWP, respectively, as marked on the specification plate.

(4) Any cargo tank marked or certified before August 31, 1995, marked with a design pressure rather than an MAWP may be used for an authorized lading where the largest pressure derived from §173.33(c)(1) is less than or equal to the design pressure marked on the cargo tank.

(5) Any material that meets the definition of a Division 6.1, Packing Group I or II (poisonous liquid) material must be loaded in a cargo tank motor vehicle having a MAWP of 25 psig or greater.

(6) *Substitute packagings.* Unless otherwise specified, where MC 307, MC 312, DOT 407 or DOT 412 cargo tanks are authorized, minimum tank design pressure is 172.4 kPa (25 psig) for any Packing Group I or Packing Group II liquid lading that meets more than one hazard class definition.

(d) *Relief system.* (1) Non-reclosing pressure relief devices are not authorized in any cargo tank except when in series with a reclosing pressure relief device. However, a cargo tank marked or certified before August 31, 1995 which is fitted with non-reclosing pressure relief devices may continue to be used in any hazardous material service for which it is authorized. The requirements in this paragraph do not apply to MC 330, MC 331 and MC 338 cargo tanks.

(2) Each cargo tank motor vehicle used to transport a liquid hazardous material with a gas pad must have a pressure relief system that provides the venting capacity prescribed in §178.345–10(e) of this subchapter. The requirements in this paragraph do not apply to MC 330, MC 331 and MC 338 cargo tanks.

(3) A cargo tank motor vehicle made to a specification listed in column 1 may have pressure relief devices or outlets conforming to the applicable specification to which the tank was constructed, or the pressure relief devices or outlets may be modified to meet the applicable requirement for the specification listed in column 2 without changing the markings on the tank specification plate. The venting capacity requirements of the original DOT cargo tank specification must be met whenever a pressure relief valve is modified.

Column 1	Column 2
MC 300, MC 301, MC 302, MC 303, MC 305.	MC 306 or DOT 406.
MC 306	DOT 406.
MC 304	MC 307 or DOT 407.
MC 307	DOT 407.
MC 310, MC 311	MC 312 or DOT 412.
MC 312	DOT 412.
MC 330	MC 331.

(e) *Retention of hazardous materials in product piping during transportation.* DOT specification cargo tanks used for the transportation of any material that is a Division 6.1 (poisonous liquid) material, oxidizer liquid, liquid organic peroxide or corrosive liquid (corrosive to skin only) may not be transported with hazardous materials lading retained in the piping, unless the cargo tank motor vehicle is equipped with

ED_001691B_00009240

bottom damage protection devices meeting the requirements of § 178.337–10 or § 178.345–8(b) of this subchapter, or the accident damage protection requirements of the specification under which it was manufactured. This requirement does not apply to a residue which remains after the piping is drained. A sacrificial device (see § 178.345–1 of this subchapter) may not be used to satisfy the accident damage protection requirements of this paragraph.

(f) An MC 331 type cargo tank may be used where MC 306, MC 307, MC 312, DOT 406, DOT 407 or DOT 412 type cargo tanks are authorized. An MC 307, MC 312, DOT 407 or DOT 412 type cargo tank may be used where MC 306 or DOT 406 type cargo tanks are authorized. A higher integrity tank used instead of a specified tank must meet the same design profile (for example, an MC 331 cargo tank must be lined if used in place of a lined MC 312 cargo tank.)

(g) *Remote control of self-closing stop valves—MC 330, MC 331 and MC 338 cargo tanks.* Each liquid or vapor discharge opening in an MC 330 or MC 331 cargo tank and each liquid filling and liquid discharge line in an MC 338 cargo tank must be provided with a remotely controlled internal self-closing stop valve except when an MC 330 or MC 331 cargo tank is marked and used exclusively to transport carbon dioxide; an MC 338 is used to transport argon, carbon dioxide, helium, krypton, neon, nitrogen, or xenon; or an MC 338 utilizes an external self-closing stop valve to comply with the requirements in § 178.338–11(b). However, if the cargo tank motor vehicle was certified before January 1, 1995, this requirement is applicable only when an MC 330 or MC 331 cargo tank is used to transport a flammable liquid, flammable gas, hydrogen chloride (refrigerated liquid), or anhydrous ammonia; or when an MC 338 cargo tank is used to transport flammable ladings.

(h) A cargo tank motor vehicle authorized by the Transport Canada TDG Regulations (IBR, see § 171.7 of this subchapter) may be used provided it conforms to the applicable requirements in § 171.12 of this subchapter.

[Amdt. 173–212, 54 FR 25005, June 12, 1989]

EDITORIAL NOTE: For FEDERAL REGISTER citations affecting § 173.33, see the List of CFR Sections Affected, which appears in the Finding Aids section of the printed volume and at *www.fdsys.gov*.

§ 173.34 [Reserved]

§ 173.35 Hazardous materials in IBCs.

(a) No person may offer or accept a hazardous material for transportation in an IBC except as authorized by this subchapter. Each IBC used for the transportation of hazardous materials must conform to the requirements of its specification and regulations for the transportation of the particular commodity. A specification IBC, for which the prescribed periodic retest or inspection under subpart D of part 180 of this subchapter is past due, may not be filled and offered for transportation until the retest or inspection have been successfully completed. This requirement does not apply to any IBC filled prior to the retest or inspection due date.

(b) *Initial use and reuse of IBCs.* (Also see § 180.352 of this subchapter.) An IBC other than a multiwall paper IBC (13M1 and 13M2) may be reused. If an inner liner is required, the inner liner must be replaced before each reuse. Before an IBC is filled and offered for transportation, the IBC and its service equipment must be given an external visual inspection, by the person filling the IBC, to ensure that:

(1) The IBC is free from corrosion, contamination, cracks, cuts, or other damage which would render it unable to pass the prescribed design type test to which it is certified and marked; and

(2) The IBC is marked in accordance with requirements in § 178.703 of this subchapter. Additional marking allowed for each design type may be present. Required markings that are missing, damaged or difficult to read must be restored or returned to original condition.

(c) A metal IBC, or a part thereof, subject to thinning by mechanical abrasion or corrosion due to the lading, must be protected by providing a suitable increase in thickness of material, a lining or some other suitable method of protection. Increased thickness for corrosion or abrasion protection must be added to the wall thickness specified in § 178.705(c)(1)(iv) of this subchapter.

ED_001691B_00009240

(d) Notwithstanding requirements in § 173.24b of this subpart, when filling an IBC with liquids, sufficient ullage must be left to ensure that, at the mean bulk temperature of 50 °C (122 °F), the IBC is not filled to more than 98 percent of its water capacity.

(e) Where two or more closure systems are fitted in series, the system nearest to the hazardous material being carried must be closed first.

(f) During transportation—

(1) No hazardous material may remain on the outside of the IBC; and

(2) Each IBC must be securely fastened to or contained within the transport unit.

(g) Each IBC used for transportation of solids which may become liquid at temperatures likely to be encountered during transportation must also be capable of containing the substance in the liquid state.

(h) Liquid hazardous materials may only be offered for transportation in a metal, rigid plastic, or composite IBC that is appropriately resistant to an increase in internal pressure likely to develop during transportation.

(1) A rigid plastic or composite IBC may only be filled with a liquid having a vapor pressure less than or equal to the greater of the following two values: The first value is determined from any of the methods in paragraphs (h)(1)(i), (ii) or (iii) of this section. The second value is determined by the method in paragraph (h)(1)(iv) of this section.

(i) The gauge pressure (pressure in the IBC above ambient atmospheric pressure) measured in the IBC at 55 °C (131 °F). This gauge pressure must not exceed two-thirds of the marked test pressure and must be determined after the IBC was filled and closed at 15 °C (60 °F) to less than or equal to 98 percent of its capacity.

(ii) The absolute pressure (vapor pressure of the hazardous material plus atmospheric pressure) in the IBC at 50 °C (122 °F). This absolute pressure must not exceed four-sevenths of the sum of the marked test pressure and 100 kPa (14.5 psia).

(iii) The absolute pressure (vapor pressure of the hazardous material plus atmospheric pressure) in the IBC at 55 °C (131 °F). This absolute pressure must not exceed two-thirds of the sum of the marked test pressure and 100 kPa (14.5 psia).

(iv) Twice the static pressure of the substance, measured at the bottom of the IBC. This value must not be less than twice the static pressure of water.

(2) Liquids having a vapor pressure greater than 110 kPa (16 psig) at 50 °C (122 °F) or 130 kPa (18.9 psig) at 55 °C (131 °F) may not be transported in metal IBCs.

(i) The requirements in this section do not apply to DOT-56 or –57 portable tanks.

(j) No IBC may be filled with a Packing Group I liquid. Rigid plastic, composite, flexible, wooden or fiberboard IBC used to transport Packing Group I solid materials may not exceed 1.5 cubic meters (53 cubic feet) capacity. For Packing Group I solids, a metal IBC may not exceed 3 cubic meters (106 cubic feet) capacity.

(k) When an IBC is used for the transportation of liquids with a flash point of 60 °C (140 °F) (closed cup) or lower, or powders with the potential for dust explosion, measures must be taken during product loading and unloading to prevent a dangerous electrostatic discharge.

(l) *IBC filling limits.* (1) Except as provided in this section, an IBC may not be filled with a hazardous material in excess of the maximum gross mass marked on that container.

(2) An IBC which is tested and marked for Packing Group II liquid materials may be filled with a Packing Group III liquid material to a gross mass not exceeding 1.5 times the maximum gross mass marked on that container, if all the performance criteria can still be met at the higher gross mass.

(3) An IBC which is tested and marked for liquid hazardous materials may be filled with a solid hazardous material to a gross mass not exceeding the maximum gross mass marked on that container. In addition, an IBC intended for the transport of liquids which is tested and marked for Packing Group II liquid materials may be filled with a Packing Group III solid hazardous material to a gross mass not exceeding the marked maximum gross

ED_001691B_00009240

mass multiplied by 1.5 if all the performance criteria can still be met at the higher gross mass.

(4) An IBC which is tested and marked for Packing Group I solid materials may be filled with a Packing Group II solid material to a gross mass not exceeding the maximum gross mass marked on that container, multiplied by 1.5, if all the performance criteria can be met at the higher gross mass; or a Packing Group III solid material to a gross mass not exceeding the maximum gross mass marked on the IBC, multiplied by 2.25, if all the performance criteria can be met at the higher gross mass. An IBC which is tested and marked for Packing Group II solid materials may be filled with a Packing Group III solid material to a gross mass not exceeding the maximum gross mass marked on the IBC, multiplied by 1.5.

[Amdt. 173–238, 59 FR 38064, July 26, 1994, as amended by Amdt. 173–243, 60 FR 40038, Aug. 4, 1995; 64 FR 10777, Mar. 5, 1999; 66 FR 45380, 45381, Aug. 28, 2001; 68 FR 48569, Aug. 14, 2003; 71 FR 78631, Dec. 29, 2006; 75 FR 5393, Feb. 2, 2010; 77 FR 60942, Oct. 5, 2012]

§ 173.36 Hazardous materials in Large Packagings.

(a) No person may offer or accept a hazardous material for transportation in a Large Packaging except as authorized by this subchapter. Except as otherwise provided in this subchapter, no Large Packaging may be filled with a Packing Group I or II material. Each Large Packaging used for the transportation of hazardous materials must conform to the requirements of its specification and regulations for the transportation of the particular commodity.

(b) *Packaging design*—(1) *Inner packaging closures.* A Large Packaging containing liquid hazardous materials must be packed so that closures on inner packagings are upright.

(2) *Flexible Large Packagings.* Flexible Large Packagings (*e.g.*, 51H) are only authorized for use with flexible inner packagings.

(3) *Friction.* The nature and thickness of the outer packaging must be such that friction during transportation is not likely to generate an amount of heat sufficient to dangerously alter the chemical stability of the contents.

(4) *Securing and cushioning.* Inner packagings of Large Packagings must be packed, secured and cushioned to prevent their breakage or leakage and to control their shifting within the outer packaging under conditions normally incident to transportation. Cushioning material must not be capable of reacting dangerously with the contents of the inner packagings or having its protective properties significantly weakened in the event of leakage.

(5) *Metallic devices.* Nails, staples and other metallic devices must not protrude into the interior of the outer packaging in such a manner as to be likely to damage inner packagings or receptacles.

(c) *Initial use and reuse of Large Packagings.* A Large Packaging may be reused. If an inner packaging is constructed of paper or flexible plastic, the inner packaging must be replaced before each reuse. Before a Large Packaging is filled and offered for transportation, the Large Packaging must be given an external visual inspection, by the person filling the Large Packaging, to ensure:

(1) The Large Packaging is free from corrosion, contamination, cracks, cuts, or other damage which would render it unable to pass the prescribed design type test to which it is certified and marked; and

(2) The Large Packaging is marked in accordance with requirements in § 178.910 of this subchapter. Additional marking allowed for each design type may be present. Required markings that are missing, damaged or difficult to read must be restored or returned to original condition.

(d) During transportation—

(1) No hazardous material may remain on the outside of the Large Packaging; and

(2) Each Large Packaging must be securely fastened to or contained within the transport unit.

(e) Each Large Packaging used for transportation of solids which may become liquid at temperatures likely to be encountered during transportation may not be transported in paper or

ED_001691B_00009240

fiber inner packagings. The inner packagings must be capable of containing the substance in the liquid state.

(f) Liquid hazardous materials may only be offered for transportation in inner packagings appropriately resistant to an increase of internal pressure likely to develop during transportation.

(g) A Large Packaging used to transport hazardous materials may not exceed 3 cubic meters (106 cubic feet) capacity.

(h) *Mixed contents.* (1) An outer Large Packaging may contain more than one hazardous material only when—

(i) The inner and outer packagings used for each hazardous material conform to the relevant packaging sections of this part applicable to that hazardous material, and not result in a violation of § 173.21;

(ii) The package as prepared for shipment meets the performance tests prescribed in part 178 of this subchapter for the hazardous materials contained in the package;

(iii) Corrosive materials (except ORM–D) in bottles are further packed in securely closed inner receptacles before packing in outer packagings; and

(iv) For transportation by aircraft, the total net quantity does not exceed the lowest permitted maximum net quantity per package as shown in Column 9a or 9b, as appropriate, of the § 172.101 table. The permitted maximum net quantity must be calculated in kilograms if a package contains both a liquid and a solid.

(2) A packaging containing inner packagings of Division 6.2 materials may not contain other hazardous materials, except dry ice.

(i) When a Large Packaging is used for the transportation of liquids with a flash point of 60.5 °C (141 °F) (closed cup) or lower, or powders with the potential for dust explosion, measures must be taken during product loading and unloading to prevent a dangerous electrostatic discharge.

[75 FR 5393, Feb. 2, 2010]

§ 173.37 Hazardous Materials in Flexible Bulk Containers.

(a) No person may offer or accept a hazardous material for transportation in a Flexible Bulk Container except as authorized by this subchapter. Each Flexible Bulk Container used for the transportation of hazardous materials must conform to the requirements of its specification and regulations for the transportation of the particular commodity.

(b) *Initial use and reuse of Flexible Bulk Containers.* A Flexible Bulk Container may be reused. Before a Flexible Bulk Container is filled and offered for transportation, the Flexible Bulk Container must be given an external visual inspection by the person filling the Flexible Bulk Container to ensure:

(1) The Flexible Bulk Container is free from corrosion, contamination, cracks, cuts, or other damage that would render it unable to pass the prescribed design type test to which it is certified and marked; and

(2) The Flexible Bulk Container is marked in accordance with requirements in § 178.1010 of this subchapter. Required markings that are missing, damaged or difficult to read must be restored or returned to original condition.

(3) The following components must be examined to determine structural serviceability:

(i) Textile slings;

(ii) Load-bearing structure straps;

(iii) Body fabric; and

(iv) Lock device parts including metal and textile parts are free from protrusions or damage.

(4) The use of Flexible Bulk Containers for the transport of hazardous materials is permitted for a period not to exceed two years from the date of manufacture of the Flexible Bulk Container.

(c) During transportation—

(1) No hazardous material may remain on the outside of the Flexible Bulk Container; and

(2) Each Flexible Bulk Container must be securely fastened to or contained within the transport unit.

(3) If restraints such as banding or straps are used, these straps must not be over-tightened to an extent that causes damage or deformation to the Flexible Bulk Container.

(4) Flexible Bulk Containers must be transported in a conveyance with rigid sides and ends that extend at least two-

ED_001691B_00009240

thirds of the height of the Flexible Bulk Container.

(5) Flexible Bulk Containers must not be stacked for highway or rail transportation.

(6) Flexible Bulk Containers must not be transported in cargo transport units when offered for transportation by vessel.

(7) Flexible Bulk Containers when transported by barge must be stowed in such a way that there are no void spaces between the Flexible Bulk Containers in the barge. If the Flexible Bulk Containers do not completely fill the barge, adequate measures must be taken to avoid shifting of cargo. The maximum permissible height of the stack of Flexible Bulk Containers must not exceed 3 containers high.

(d) A Flexible Bulk Container used to transport hazardous materials may not exceed 15 cubic meters (530 cubic feet) capacity.

[78 FR 1073, Jan. 7, 2013]

§ 173.40 General packaging requirements for toxic materials packaged in cylinders.

When this section is referenced for a Hazard Zone A or B hazardous material elsewhere in this subchapter, the requirements in this section are applicable to cylinders used for that material.

(a) *Authorized cylinders.* (1) A cylinder must conform to a DOT specification or a UN standard prescribed in subpart C of part 178 of this subchapter, except that acetylene cylinders and non-refillable cylinders are not authorized. The use of UN tubes and MEGCs is prohibited for Hazard Zone A materials.

(2) The use of a specification 3AL cylinder made of aluminum alloy 6351–T6 is prohibited for a Division 2.3 Hazard Zone A material or a Division 6.1 Hazard Zone A material.

(3) A UN composite cylinder certified to ISO–11119–3 is not authorized for a Division 2.3 Hazard Zone A or B material.

(4) For UN seamless cylinders used for Hazard Zone A materials, the maximum water capacity is 85 L.

(b) *Outage and pressure requirements.* For DOT specification cylinders, the pressure at 55 °C (131 °F) of Hazard Zone A and Hazard Zone B materials may not exceed the service pressure of the cylinder. Sufficient outage must be provided so that the cylinder will not be liquid full at 55 °C (131 °F).

(c) *Closures.* Each cylinder containing a Hazard Zone A material must be closed with a plug or valve conforming to the following:

(1) Each plug or valve must have a taper-threaded connection directly to the cylinder and be capable of withstanding the test pressure of the cylinder without damage or leakage. For UN pressure receptacles, each valve must be capable of withstanding the test pressure of the pressure receptacle and be connected directly to the pressure receptacle by either a taper thread or other means which meets the requirements of ISO 10692–2: (IBR, *see* § 171.7 of this subchapter).

(2) Each valve must be of the packless type with non-perforated diaphragm, except that, for corrosive materials, a valve may be of the packed type with an assembly made gas-tight by means of a seal cap with gasketed joint attached to the valve body or the cylinder to prevent loss of material through or past the packing.

(3) Each valve outlet must be sealed by a threaded cap or threaded solid plug and inert gasketing material.

(4) The materials of construction for the cylinder, valves, plugs, outlet caps, luting, and gaskets must be compatible with each other and with the lading.

(d) *Additional handling protection.* Each cylinder or cylinder overpack combination offered for transportation containing a Division 2.3 or 6.1 Hazard Zone A or B material must conform to the valve damage protection performance requirements of this section. In addition to the requirements of this section, overpacks must conform to the overpack provisions of § 173.25.

(1) DOT specification cylinders must conform to the following:

(i) Each cylinder with a wall thickness at any point of less than 2.03 mm (0.08 inch) and each cylinder that does not have fitted valve protection must be overpacked in a box. The box must conform to overpack provisions in § 173.25. Box and valve protection must be of sufficient strength to protect all parts of the cylinder and valve, if any, from deformation and breakage resulting from a drop of 2.0 m (7 ft) or more

ED_001691B_00009240

onto a non-yielding surface, such as concrete or steel, impacting at an orientation most likely to cause damage. ''Deformation''means a cylinder or valve that is bent, distorted, mangled, misshapen, twisted, warped, or in a similar condition.

(ii) Each cylinder with a valve must be equipped with a protective metal cap, other valve protection device, or an overpack which is sufficient to protect the valve from breakage or leakage resulting from a drop of 2.0 m (7 ft) onto a non-yielding surface, such as concrete or steel. Impact must be at an orientation most likely to cause damage.

(2) Each UN cylinder containing a Hazard Zone A or Hazard Zone B material must have a minimum test pressure in accordance with P200 of the UN Recommendations (IBR, see § 171.7 of this subchapter). For Hazard Zone A gases, the cylinder must have a minimum wall thickness of 3.5 mm if made of aluminum alloy or 2 mm if made of steel or, alternatively, cylinders may be packed in a rigid outer packaging that meets the Packing Group I performance level when tested as prepared for transport, and that is designed and constructed to protect the cylinder and valve from puncture or damage that may result in release of the gas.

(e) *Interconnection.* Cylinders may not be manifolded or connected. This provision does not apply to MEGCs containing Hazard Zone B materials in accordance with § 173.312.

[67 FR 51642, Aug. 8, 2002, as amended at 67 FR 61289, Sept. 30, 2002; 68 FR 24660, May 8, 2003; 71 FR 33880, June 12, 2006; 76 FR 3371, Jan. 19, 2011]

§ 173.41 Sampling and testing program for unrefined petroleum-based products.

(a) *General.* Unrefined petroleum-based products offered for transportation must be properly classed and described as prescribed in § 173.22, in accordance with a sampling and testing program, which specifies at a minimum:

(1) A frequency of sampling and testing that accounts for any appreciable variability of the material (*e.g.*, history, temperature, method of extraction [including chemical use], location of extraction, time of year, length of time between shipments);

(2) Sampling prior to the initial offering of the material for transportation and when changes that may affect the properties of the material occur (*i.e.*, mixing of the material from multiple sources, or further processing and then subsequent transportation);

(3) Sampling methods that ensure a representative sample of the entire mixture, as offered, is collected;

(4) Testing methods that enable classification of the material under the HMR;

(5) Quality control measures for sample frequencies;

(6) Duplicate sampling methods or equivalent measures for quality assurance;

(7) Criteria for modifying the sampling and testing program; and

(8) Testing or other appropriate methods used to identify properties of the mixture relevant to packaging requirements (*e.g.*, compatibility with packaging, identifying specific gravity for filling packages).

(b) *Certification.* Each person who offers a hazardous material for transportation shall certify, as prescribed by § 172.204 of this subchapter, that the material is offered for transportation in accordance with this subchapter, including the requirements prescribed by paragraph (a) of this section.

(c) *Documentation, retention, review, and dissemination of program.* The sampling and testing program must be documented in writing (*i.e.* hardcopy or electronic file thereof) and must be retained for as long as the sampling and testing program remains in effect, or a minimum of one year. The sampling and testing program must be reviewed at least annually and revised and/or updated as necessary to reflect changed circumstances. The most recent version of the sampling and testing program must be available to the employees who are responsible for implementing it. When the sampling and testing program is updated or revised, all employees responsible for implementing it must be notified, and the most recent version must be made available.

ED_001691B_00009240

(d) *Access by DOT to program documentation.* Each person required to develop and implement a sampling and testing program must maintain a copy of the sampling and testing program documentation (or an electronic file thereof) that is accessible at, or through, its principal place of business, and must make the documentation available upon request at a reasonable time and location to an authorized official of the Department of Transportation.

[80 FR 26746, May 8, 2015]

Subpart C—Definitions, Classification and Packaging for Class 1

SOURCE: Amdt. 173–224, 55 FR 52617, Dec. 21, 1990, unless otherwise noted.

§ 173.50 Class 1—Definitions.

(a) *Explosive.* For the purposes of this subchapter, an *explosive* means any substance or article, including a device, which is designed to function by explosion (*i.e.,* an extremely rapid release of gas and heat) or which, by chemical reaction within itself, is able to function in a similar manner even if not designed to function by explosion, unless the substance or article is otherwise classed under the provisions of this subchapter. The term includes a pyrotechnic substance or article, unless the substance or article is otherwise classed under the provisions of this subchapter.

(b) Explosives in Class 1 are divided into six divisions as follows:

(1) *Division 1.1* consists of explosives that have a mass explosion hazard. A mass explosion is one which affects almost the entire load instantaneously.

(2) *Division 1.2* consists of explosives that have a projection hazard but not a mass explosion hazard.

(3) *Division 1.3* consists of explosives that have a fire hazard and either a minor blast hazard or a minor projection hazard or both, but not a mass explosion hazard.

(4) *Division 1.4* consists of explosives that present a minor explosion hazard. The explosive effects are largely confined to the package and no projection of fragments of appreciable size or range is to be expected. An external fire must not cause virtually instantaneous explosion of almost the entire contents of the package.

(5) *Division 1.5*[1] consists of very insensitive explosives. This division is comprised of substances which have a mass explosion hazard but are so insensitive that there is very little probability of initiation or of transition from burning to detonation under normal conditions of transport.

(6) *Division 1.6*[2] consists of extremely insensitive articles that do not have a mass explosion hazard. This division is comprised of articles that contain only extremely insensitive substances and that demonstrate a negligible probability of accidental initiation or propagation.

[Amdt. 173–224, 55 FR 52617 Dec. 21, 1990, as amended at 56 FR 66267, Dec. 20, 1991; 66 FR 45183, Aug. 28, 2001; 68 FR 48569, Aug. 14, 2003; 78 FR 1074, Jan. 7, 2013]

§ 173.51 Authorization to offer and transport explosives.

(a) Unless otherwise provided in this subpart, no person may offer for transportation or transport an explosive, unless it has been tested and classed and approved by the Associate Administrator (§ 173.56).

(b) Reports of explosives approved by the Department of Defense or the Department of Energy must be filed with, and receive acknowledgement in writing by, the Associate Administrator prior to such explosives being offered for transportation.

[Amdt. 173–224, 55 FR 52617, Dec. 21, 1990, as amended by 66 FR 45379, Aug. 28, 2001]

§ 173.52 Classification codes and compatibility groups of explosives.

(a) The classification code for an explosive, which is assigned by the Associate Administrator in accordance with this subpart, consists of the division number followed by the compatibility group letter. Compatibility group letters are used to specify the controls for the transportation, and storage related

[1] The probability of transition from burning to detonation is greater when large quantities are transported in a vessel.

[2] The risk from articles of Division 1.6 is limited to the explosion of a single article.

ED_001691B_00009240

thereto, of explosives and to prevent an increase in hazard that might result if certain types of explosives were stored or transported together. Transportation compatibility requirements for carriers are prescribed in §§ 174.81, 175.78. 176.83 and 177.848 of this subchapter for transportation by rail, air, vessel, and public highway, respectively, and storage incidental thereto.

(b) Compatibility groups and classification codes for the various types of explosives are set forth in the following tables. Table 1 sets forth compatibility groups and classification codes for substances and articles described in the first column of table 1. Table 2 shows the number of classification codes that are possible within each explosive division. Altogether, there are 35 possible classification codes for explosives.

TABLE 1—CLASSIFICATION CODES

Description of substances or article to be classified	Compatibility group	Classification code
Primary explosive substance	A	1.1A
Article containing a primary explosive substance and not containing two or more effective protective features. Some articles, such as detonators for blasting, detonator assemblies for blasting and primers, cap-type, are included, even though they do not contain primary explosives..	B	1.1B 1.2B 1.4B
Propellant explosive substance or other deflagrating explosive substance or article containing such explosive substance.	C	1.1C 1.2C 1.3C 1.4C
Secondary detonating explosive substance or black powder or article containing a secondary detonating explosive substance, in each case without means of initiation and without a propelling charge, or article containing a primary explosive substance and containing two or more effective protective features.	D	1.1D 1.2D 1.4D 1.5D
Article containing a secondary detonating explosive substance, without means of initiation, with a propelling charge (other than one containing flammable liquid or gel or hypergolic liquid).	E	1.1E 1.2E 1.4E
Article containing a secondary detonating explosive substance with its means of initiation, with a propelling charge (other than one containing flammable liquid or gel or hypergolic liquid) or without a propelling charge.	F	1.1F 1.2F 1.3F 1.4F
Pyrotechnic substance or article containing a pyrotechnic substance, or article containing both an explosive substance and an illuminating, incendiary, tear-producing or smoke-producing substance (other than a water-activated article or one containing white phosphorus, phosphide or flammable liquid or gel or hypergolic liquid).	G	1.1G 1.2G 1.3G 1.4G
Article containing both an explosive substance and white phosphorus	H	1.2H 1.3H
Article containing both an explosive substance and flammable liquid or gel	J	1.1J 1.2J 1.3J
Article containing both an explosive substance and a toxic chemical agent	K	1.2K 1.3K
Explosive substance or article containing an explosive substance and presenting a special risk (e.g., due to water-activation or presence of hybergolic liquids, phosphides or pyrophoric substances) needing isolation of each type.	L	1.1L 1.2L 1.3L
Articles containing only extremely insensitive substances	N	1.6N
Substance or article so packed or designed that any hazardous effects arising from accidental functioning are limited to the extent that they do not significantly hinder or prohibit fire fighting or other emergency response efforts in the immediate vicinity of the package.	S	1.4S

TABLE 2—SCHEME OF CLASSIFICATION OF EXPLOSIVES, COMBINATION OF HAZARD DIVISION WITH COMPATIBILITY GROUP

Hazard division	Compatibility group													
	A	B	C	D	E	F	G	H	J	K	L	N	S	A–S
1.1	1.1A	1.1B	1.1C	1.1D	1.1E	1.1F	1.1G		1.1J		1.1L			9
1.2		1.2B	1.2C	1.2D	1.2E	1.2F	1.2G	1.2H	1.2J	1.2K	1.2L			10
1.3			1.3C			1.3F	1.3G	1.3H	1.3J	1.3K	1.3L			7
1.4		1.4B	1.4C	1.4D	1.4E	1.4F	1.4G						1.4S	7
1.5				1.5D										1
1.6												1.6N		1
Total	1	3	4	4	3	4	4	2	3	2	3	1	1	35

ED_001691B_00009240

[Amdt. 173–224, 55 FR 52617, Dec. 21, 1990, as amended by Amdt. 173–241, 59 FR 67492, Dec. 29, 1994; 64 FR 51918, Sept. 27, 1999; 66 FR 45379, Aug. 28, 2001; 76 FR 56315, Sept. 13, 2011; 78 FR 1074, Jan. 7, 2013]

§ 173.53 Provisions for using old classifications of explosives.

Where the classification system in effect prior to January 1, 1991, is referenced in State or local laws, ordinances or regulations not pertaining to the transportation of hazardous materials, the following table may be used to compare old and new hazard class names:

Current classification	Class name prior to Jan. 1, 1991
Division 1.1	Class A explosives.
Division 1.2	Class A or Class B explosives.
Division 1 3	Class B explosive.
Division 1.4	Class C explosives.
Division 1.5	Blasting agents.
Division 1.6	No applicable hazard class.

§ 173.54 Forbidden explosives.

Unless otherwise provided in this subchapter, the following explosives shall not be offered for transportation or transported:

(a) An explosive that has not been approved in accordance with § 173.56 of this subpart.

(b) An explosive mixture or device containing a chlorate and also containing:

(1) An ammonium salt, including a substituted ammonium or quaternary ammonium salt; or

(2) An acidic substance, including a salt of a weak base and a strong acid.

(c) A leaking or damaged package or article containing an explosive.

(d) Propellants that are unstable, condemned or deteriorated.

(e) Nitroglycerin, diethylene glycol dinitrate, or any other liquid explosives not specifically authorized by this subchapter.

(f) A loaded firearm (except as provided in 49 CFR 1544.219).

(g) Fireworks that combine an explosive and a detonator.

(h) Fireworks containing yellow or white phosphorus.

(i) A toy torpedo, the maximum outside dimension of which exceeds 23 mm (0.906 inch), or a toy torpedo containing a mixture of potassium chlorate, black antimony (antimony sulfide), and sulfur, if the weight of the explosive material in the device exceeds 0.26 g (0.01 ounce).

(j) Explosives specifically forbidden in the § 172.101 table of this subchapter.

(k) Explosives not meeting the acceptance criteria specified in § 173.57 of this subchapter.

(l) An explosive article with its means of initiation or ignition installed, unless approved in accordance with § 173.56.

[Amdt. 173–224, 55 FR 52617 Dec. 21, 1990, as amended at 56 FR 66267, Dec. 20, 1991; Amdt. 173–236, 58 FR 50236, Sept. 24, 1993; 67 FR 61013, Sept. 27, 2002; 68 FR 48569, Aug. 14, 2003]

§ 173.55 [Reserved]

§ 173.56 New explosives—definition and procedures for classification and approval.

(a) Definition of new explosive. For the purposes of this subchapter a *new explosive* means an explosive produced by a person who:

(1) Has not previously produced that explosive; or

(2) Has previously produced that explosive but has made a change in the formulation, design or process so as to alter any of the properties of the explosive. An explosive will not be considered a "new explosive" if an agency listed in paragraph (b) of this section has determined, and confirmed in writing to the Associate Administrator, that there are no significant differences in hazard characteristics from the explosive previously approved.

(b) Examination, classification and approval. Except as provided in §§ 173.64 and 173.65, no person may offer a new explosive for transportation unless that person has specified to the examining agency the ranges of composition of ingredients and compounds, showing the intended manufacturing tolerances in the composition of substances or design of articles which will be allowed in that material or device, and unless it has been examined, classed and approved as follows:

(1) Except for an explosive made by or under the direction or supervision of the Department of Defense (DOD) or

ED_001691B_00009240

the Department of Energy (DOE), a new explosive must be examined and assigned a recommended shipping description, division and compatibility group, based on the tests and criteria prescribed in §§173.52, 173.57 and 173.58. The person requesting approval of the new explosive must submit to the Associate Administrator a report of the examination and assignment of a recommended shipping description, division, and compatibility group. If the Associate Administrator finds the approval request meets the regulatory criteria, the new explosive will be approved in writing and assigned an EX number. The examination must be performed by a person who is approved by the Associate Administrator under the provisions of subpart H of part 107 of this chapter and who—

(i) Has (directly, or through an employee involved in the examination) at least ten years of experience in the examination, testing and evaluation of explosives;

(ii) Does not manufacture or market explosives, and is not controlled by or financially dependent on any entity that manufactures or markets explosives, and whose work with respect to explosives is limited to examination, testing and evaluation; and

(iii) Is a resident of the United States.

(2) A new explosive made by or under the direction or supervision of a component of the DOD may be examined, classed, and concurred in by:

(i) U.S. Army Technical Center for Explosives Safety (SMCAC-EST), Naval Sea Systems Command (SEA–9934), or Air Force Safety Agency (SEW), when approved by the Chairman, DOD Explosives Board, in accordance with the DOD Explosives Hazard Classification Procedures (IBR, see §171.7 of the subchapter); or

(ii) The agencies and procedures specified in paragraph (b)(1) of this section.

(3) A new explosive made by or under the direction or supervision of the Department of Energy (DOE) may be—

(i) Examined by the DOE in accordance with the DOD Explosives Hazard Classification Procedures, and must be classed and approved by DOE; or

(ii) Examined, classed, and approved in accordance with paragraph (b)(1) of this section.

(4) For a material shipped under the description of "ammonium nitrate-fuel oil mixture (ANFO)", the only test required for classification purposes is the Cap Sensitivity Test—Test Method 5(a) prescribed in the Explosive Test Manual (UN Manual of Tests and Criteria) (IBR, see §171.7 of the subchapter). The test must be performed by an agency listed in paragraph (b)(1), (b)(2), or (b)(3) of this section, the manufacturer, or the shipper. A copy of the test report must be submitted to the Associate Administrator before the material is offered for transportation, and a copy of the test report must be retained by the shipper for as long as that material is shipped. At a minimum, the test report must contain the name and address of the person or organization conducting the test, date of the test, quantitative description of the mixture, including prill size and porosity, and a description of the test results.

(c) Filing DOD or DOE approval report. DOD or DOE must file a copy of each approval, accompanied by supporting laboratory data, with the Associate Administrator and receive acknowledgement in writing before offering the new explosive for transportation, unless the new explosive is:

(1) Being transported under paragraph (d) or (e) of this section; or

(2) Covered by a national security classification currently in effect.

(d) Transportation of explosive samples for examination. Notwithstanding the requirements of paragraph (b) of this section with regard to the transportation of a new explosive that has not been approved, a person may offer a sample of a new explosive for transportation, by railroad, highway, or vessel from the place where it was produced to an agency identified in paragraph (b) of this section, for examination if—

(1) The new explosive has been assigned a tentative shipping description and class in writing by the testing agency;

(2) The new explosive is packaged as required by this part according to the

ED_001691B_00009240

tentative description and class assigned, unless otherwise specified in writing by the testing agency; and,

(3) The package is labeled as required by this subchapter and the following is marked on the package:

(i) The words "SAMPLE FOR LABORATORY EXAMINATION";

(ii) The net weight of the new explosive; and

(iii) The tentative shipping name and identification number.

(e) Transportation of unapproved explosives for developmental testing. Notwithstanding the requirements of paragraph (b) of this section, the owner of a new explosive that has not been examined or approved may transport that new explosive from the place where it was produced to an explosives testing range if—

(1) It is not a primary (a 1.1A initiating) explosive or a forbidden explosive according to this subchapter;

(2) It is described as a Division 1.1 explosive (substance or article) and is packed, marked, labeled, described on shipping papers and is otherwise offered for transportation in conformance with the requirements of this subchapter applicable to Division 1.1;

(3) It is transported in a motor vehicle operated by the owner of the explosive; and

(4) It is accompanied by a person, in addition to the operator of the motor vehicle, who is qualified by training and experience to handle the explosive.

(f) Notwithstanding the requirements of paragraphs (b) and (d) of this section, the Associate Administrator may approve a new explosive on the basis of an approval issued for the explosive by the competent authority of a foreign government, or when examination of the explosive by a person approved by the Associate Administrator is impracticable, on the basis of reports of tests conducted by disinterested third parties, or may approve the transportation of an explosives sample for the purpose of examination by a person approved by the Associate Administrator.

(g) An explosive may be transported under subparts B or C of part 171 or §176.11 of this subchapter without the approval of the Associate Administrator as required by paragraph (b) of this section if the Associate Administrator has acknowledged in writing the acceptability of an approval issued by the competent authority of a foreign government pursuant to the provisions of the UN Recommendations, the ICAO Technical Instructions, the IMDG Code (IBR, see §171.7 of this subchapter), or other national or international regulations based on the UN Recommendations. In such a case, a copy of the foreign competent authority approval, and a copy of the written acknowledgement of its acceptance must accompany each shipment of that explosive.

(h) The requirements of this section do not apply to cartridges, small arms which are:

(1) Not a forbidden explosive under §173.54 of this subchapter;

(2) Ammunition for rifle, pistol, shotgun, or tools;

(3) Ammunition with inert projectile or blank ammunition; and

(4) Ammunition not exceeding 50 caliber for rifle or pistol cartridges or 8 gauge for shotgun shells.

Cartridges, small arms meeting the criteria of this paragraph (h) may be assigned a classification code of 1.4S by the manufacturer.

(i) If experience or other data indicate that the hazard of a material or a device containing an explosive composition is greater or less than indicated according to the definition and criteria specified in §§173.50, 173.56, and 173.58 of this subchapter, the Associate Administrator may specify a classification or except the material or device from the requirements of this subchapter.

(j) [Reserved]

[Amdt. 173–224, 55 FR 52617 Dec. 21, 1990, as amended at 56 FR 66267, Dec. 20, 1991; Amdt. 173–234, 58 FR 51532, Oct. 1, 1993; 62 FR 51560, Oct. 1, 1997; 63 FR 37461, July 10, 1998; 64 FR 10777, Mar. 5, 1999; 66 FR 45379, Aug. 28, 2001; 68 FR 75743, Dec. 31, 2003; 72 FR 25177, May 3, 2007; 78 FR 1074, Jan. 7, 2013; 78 FR 42477, July 16, 2013]

§173.57 Acceptance criteria for new explosives.

(a) Unless otherwise excepted, an explosive substance must be subjected to the Drop Weight Impact Sensitivity Test (Test Method 3(a)(i)), the Friction Sensitivity Test (Test Method 3(b)(iii)),

ED_001691B_00009240

the Thermal Stability Test (Test Method 3(c)) at 75 °C (167 °F) and the Small-Scale Burning Test (Test Method 3(d)(i)), each as described in the Explosive Test Manual (UN Manual of Tests and Criteria) (IBR, see §171.7 of this subchapter). A substance is forbidden for transportation if any one of the following occurs:

(1) For a liquid, failure to pass the test criteria when tested in the Drop Weight Impact Sensitivity Test apparatus for liquids;

(2) For a solid, failure to pass the test criteria when tested in the Drop Weight Impact Sensitivity Test apparatus for solids;

(3) The substance has a friction sensitiveness equal to or greater than that of dry pentaerythrite tetranitrate (PETN) when tested in the Friction Sensitivity Test;

(4) The substance fails to pass the test criteria specified in the Thermal Stability Test at 75 °C (167 °F); or

(5) Explosion occurs when tested in the Small-Scale Burning Test.

(b) An explosive article, packaged or unpackaged, or a packaged explosive substance must be subjected to the Thermal Stability Test for Articles and Packaged Articles (Test method 4(a)(i)) and the Twelve Meter Drop Test (Test Method 4(b)(ii)), when appropriate, in the Explosive Test Manual. An article or packaged substance is forbidden for transportation if evidence of thermal instability or excessive impact sensitivity is found in those tests according to the criteria and methods of assessing results prescribed therein.

(c) Dynamite (explosive, blasting, type A) is forbidden for transportation if any of the following occurs:

(1) It does not have, when uniformly mixed with the absorbent material, a satisfactory antacid in a quantity sufficient to have the acid neutralizing power of an amount of magnesium carbonate equal to one percent of the nitroglycerin or other liquid explosive ingredient;

(2) During the centrifuge test (Test Method D–2, in appendix D to this part) or the compression test (Test Method D–3 in appendix D to this part), a nongelatin dynamite loses more than 3 percent by weight of the liquid explosive or a gelatin dynamite loses more than 10 percent by weight of the liquid explosive; or

(3) During the leakage test (Test Method D–1 in appendix D to this part), there is any loss of liquid.

[Amdt. 173–224, 55 FR 52617 Dec. 21, 1990, as amended at 58 FR 51532, Oct. 1, 1993; 64 FR 51918, Sept. 27, 1999; 68 FR 75743, Dec. 31, 2003; 76 FR 56315, Sept. 13, 2011]

§ 173.58 Assignment of class and division for new explosives.

(a) *Division 1.1, 1.2, 1.3, and 1.4 explosives.* In addition to the test prescribed in §173.57 of this subchapter, a substance or article in these divisions must be subjected to Test Methods 6(a), 6(b), and 6(c), as described in the UN Manual of Tests and Criteria (IBR, see §171.7 of this subchapter), for assignment to an appropriate division. The criteria for assignment of class and division are as follows:

(1) Division 1.1 if the major hazard is mass explosion;

(2) Division 1.2 if the major hazard is dangerous projections;

(3) Division 1.3 if the major hazard is radiant heat or violent burning, or both, but there is no blast or projection hazard;

(4) Division 1.4 if there is a small hazard with no mass explosion and no projection of fragments of appreciable size or range;

(5) Division 1.4 Compatibility Group S (1.4S) if the hazardous effects are confined within the package or the blast and projection effects do not significantly hinder emergency response efforts. The UN Test Type 6(d) is used to determine whether a Division 1.4S classification is appropriate for an item assigned a proper shipping name to which special provision 347 (*see* §172.102 of this subchapter) applies; or

(6) Not in the explosive class if the substance or article does not have significant explosive hazard or if the effects of explosion are completely confined within the article.

(b) *Division 1.5 explosive.* Except for ANFO, a substance that has been examined in accordance with the provisions §173.57(a) of this subchapter, must be subjected to the following additional tests: Cap Sensitivity Test, Princess Incendiary Spark Test, DDT Test, and External Fire Test, each as

ED_001691B_00009240

described in the Explosive Test Manual. A material may not be classed as a Division 1.5 explosive if any of the following occurs:

(1) Detonation occurs in the Cap Sensitivity Test (Test Method 5(a));

(2) Detonation occurs in the DDT Test (Test Method 5(b)(ii));

(3) An explosion, evidenced by a loud noise and projection of fragments, occurs in the External Fire Test (Test Method 5(c), or

(4) Ignition or explosion occurs in the Princess Incendiary Spark Test (Test Method 5(d)).

(c) Division 1.6 explosive. (1) In order to be classed as a 1.6 explosive, an article must pass all of the following tests, as prescribed in the Explosive Test Manual:

(i) The 1.6 Article External Fire Test;

(ii) The 1.6 Article Slow Cook-off Test;

(iii) The 1.6 Article Propagation Test; and

(iv) The 1.6 Article Bullet Impact Test.

(2) A substance intended for use as the explosive load in an article of Division 1.6 must be an extremely insensitive detonating substance (EIDS). In order to determine if a substance is an EIDS, it must be subjected to the tests in paragraphs (c)(2)(i) through (c)(2)(x) of this section, which are described in the Explosive Test Manual. The substance must be tested in the form (i.e., composition, granulation, density, etc.) in which it is to be used in the article. A substance is not an EIDS if it fails any of the following tests:

(i) The Drop Weight Impact Sensitivity Test;

(ii) The Friction Sensitivity Test;

(iii) The Thermal Sensitivity Test at 75 °C (167 °F);

(iv) The Small Scale Burning Test;

(v) The EIDS Cap Test;

(vi) The EIDS Gap Test;

(vii) The Susan Test;

(viii) The EIDS Bullet Impact Test;

(ix) The EIDS External Fire Test; and

(x) The EIDS Slow Cook-off Test.

(d) The Associate Administrator may waive or modify certain test(s) identified in §§173.57 and 173.58 of this subchapter, or require additional testing, if appropriate. In addition, the Associate Administrator may limit the quantity of explosive in a device.

(e) Each explosive is assigned a compatibility group letter by the Associate Administrator based on the criteria prescribed in §173.52(b) of this subchapter.

[Amdt. 173–224, 55 FR 52617 Dec. 21, 1990, as amended at 56 FR 66267, Dec. 20, 1991; 63 FR 52849, Oct. 1, 1998; 66 FR 45379, Aug. 28, 2001; 68 FR 75743, Dec. 31, 2003; 76 FR 3371, Jan. 19, 2011; 76 FR 56315, Sept. 13, 2011]

§ 173.59 Description of terms for explosives.

For the purpose of this subchapter, a description of the following terms is provided for information only. They must not be used for purposes of classification or to replace proper shipping names prescribed in §172.101 of this subchapter.

Ammonium-nitrate—fuel oil mixture (ANFO). A blasting explosive containing no essential ingredients other than prilled ammonium nitrate and fuel oil.

Ammunition. Generic term related mainly to articles of military application consisting of all types of bombs, grenades, rockets, mines, projectiles and other similar devices or contrivances.

Ammunition, illuminating, with or without burster, expelling charge or propelling charge. Ammunition designed to produce a single source of intense light for lighting up an area. The term includes illuminating cartridges, grenades and projectiles, and illuminating and target identification bombs. The term excludes the following articles which are listed separately: *cartridges, signal; signal devices; hand signals; distress flares, aerial* and *flares, surface.*

Ammunition, incendiary. Ammunition containing an incendiary substance which may be a solid, liquid or gel including white phosphorus. Except when the composition is an explosive *per se,* it also contains one or more of the following: a propelling charge with primer and igniter charge, or a fuze with burster or expelling charge. The term includes: *Ammunition, incendiary,* liquid or gel, with burster, expelling charge or propelling charge; *Ammunition, incendiary* with or without burster, expelling charge or propelling charge; and

ED_001691B_00009240

Ammunition, incendiary, white phosphorus, with burster, expelling charge or propelling charge.

Ammunition, practice. Ammunition without a main bursting charge, containing a burster or expelling charge. Normally it also contains a fuze and propelling charge. The term excludes the following article which is listed separately: *Grenades, practice.*

Ammunition, proof. Ammunition containing pyrotechnic substance, used to test the performance or strength of new ammunition, weapon component or assemblies.

Ammunition, smoke. Ammunition containing a smoke-producing substance such as chlorosulphonic acid mixture (CSAM), titanium tetrachloride (FM), white phosphorus, or smoke-producing substance whose composition is based on hexachlorothannol (HC) or red phosphorus. Except when the substance is an explosive *per se,* the ammunition also contains one or more of the following: a propelling charge with primer and igniter charge, or a fuze with burster or expelling charge. The term includes: *Ammunition, smoke,* with or without burster, expelling charge or propelling charge; *Ammunition, smoke, white phosphorus* with burster, expelling charge or propelling charge.

Ammunition, tear-producing with burster, expelling charge or propelling charge. Ammunition containing tear-producing substance. It may also contain one or more of the following: a pyrotechnic substance, a propelling charge with primer and igniter charge, or a fuze with burster or expelling charge.

Ammunition, toxic. Ammunition containing toxic agent. It may also contain one or more of the following: a pyrotechnic substance, a propelling charge with primer and igniter charge, or a fuze with burster or expelling charge.

Articles, explosive, extremely insensitive (Articles, EEI). Articles that contain only extremely insensitive substances and which demonstrate a negligible probability of accidental initiation or propagation under normal conditions of transport and which have passed Test Series 7.

Articles, pyrophoric. Articles which contain a pyrophoric substance (capable of spontaneous ignition when exposed to air) and an explosive substance or component. The term excludes articles containing white phosphorus.

Articles, pyrotechnic for technical purposes. Articles which contain pyrotechnic substances and are used for technical purposes, such as heat generation, gas generation, theatrical effects, etc. The term excludes the following articles which are listed separately: all ammunition; *cartridges, signal; cutters, cable, explosive; fireworks; flares, aerial; flares, surface; release devices, explosives; rivets, explosive; signal devices, hand; signals, distress; signals, railway track, explosive*; and *signals, smoke.*

Auxiliary explosive component, isolated. A small device that explosively performs an operation related to the article's functioning, other than its main explosive loads' performance. Functioning of the component does not cause any reaction of the main explosive loads contained within the article.

Black powder (gunpowder). Substance consisting of an intimate mixture of charcoal or other carbon and either potassium or sodium nitrate, and sulphur. It may be meal, granular, compressed, or pelletized.

Bombs. Explosive articles which are dropped from aircraft. They may contain a flammable liquid with bursting charge, a photo-flash composition or bursting charge. The term excludes *torpedoes* (aerial) and includes *bombs, photo-flash; bombs* with bursting charge; *bombs with flammable liquids,* with bursting charge.

Boosters. Articles consisting of a charge of detonating explosive without means of initiation. They are used to increase the initiating power of detonators or detonating cord.

Bursters, explosive. Articles consisting of a small charge of explosive to open projectiles or other ammunition in order to disperse their contents.

Cartridges, blank. Articles that consist of a cartridge case with a center or rim fire primer and a confined charge of smokeless or black powder, but no projectile. Used in training, saluting, or in starter pistols, tools, etc.

Cartridges, flash. Articles consisting of a casing, a primer and flash powder, all assembled in one piece for firing.

ED_001691B_00009240

Cartridges for weapons. (1) Fixed (assembled) or semi-fixed (partially assembled) ammunition designed to be fired from weapons. Each cartridge includes all the components necessary to function the weapon once. The name and description should be used for military small arms cartridges that cannot be described as cartridges, small arms. Separate loading ammunition is included under this name and description when the propelling charge and projectile are packed together (see also Cartridges, blank).

(2) Incendiary, smoke, toxic, and tear-producing cartridges are described under *ammunition, incendiary,* etc.

Cartridges for weapons, inert projectile. Ammunition consisting of a casing with propelling charge and a solid or empty projectile.

Cartridges, oil well. Articles consisting of a casing of thin fiber, metal or other material containing only propellant explosive. The term excludes charges, shaped, commercial.

Cartridges, power device. Articles designed to accomplish mechanical actions. They consist of a casing with a charge of deflagrating explosive and a means of ignition. The gaseous products of the deflagration produce inflation, linear or rotary motion; activate diaphragms, valves or switches, or project fastening devices or extinguishing agents.

Cartridges, signal. Articles designed to fire colored flares or other signals from signal pistols or devices.

Cartridges, small arms. Ammunition consisting of a cartridge case fitted with a center or rim fire primer and containing both a propelling charge and solid projectile(s). They are designed to be fired in weapons of caliber not larger than 19.1 mm. Shotgun cartridges of any caliber are included in this description. The term excludes: Cartridges, small arms, blank, and some military small arms cartridges listed under *Cartridges for weapons, inert projectile.*

Cases, cartridge, empty with primer. Articles consisting of a cartridge case made from metal, plastics or other non-flammable materials, in which only the explosive component is the primer.

Cases, combustible, empty, without primer. Articles consisting of cartridge cases made partly or entirely from nitrocellulose.

Charges, bursting. Articles consisting of a charge of detonating explosive such as hexolite, octolite, or plastics-bonded explosive designed to produce effect by blast or fragmentation.

Charges, demolition. Articles consisting of a charge of detonating explosive in a casing of fiberboard, plastics, metal or other material. The term excludes articles identified as bombs, mines, etc.

Charges, depth. Articles consisting of a charge of detonating explosive contained in a drum or projectile. They are designed to detonate under water.

Charges, expelling. A charge of deflagrating explosive designed to eject the payload from the parent article without damage.

Charges, explosive, without detonator. Articles consisting of a charge of detonating explosive without means of initiation, used for explosive welding, joining, forming, and other processes.

Charges, propelling. Articles consisting of propellant charge in any physical form, with or without a casing, for use in cannon or for reducing drag for projectiles or as a component of rocket motors.

Charges, propelling for cannon. Articles consisting of a propellant charge in any physical form, with or without a casing, for use in a cannon.

Charges, shaped, without detonator. Articles consisting of a casing containing a charge of detonating explosive with a cavity lined with rigid material, without means of initiation. They are designed to produce a powerful, penetrating jet effect.

Charges, shaped, flexible, linear. Articles consisting of a V-shaped core of a detonating explosive clad by a flexible metal sheath.

Charges, supplementary, explosive. Articles consisting of a small removable booster used in the cavity of a projectile between the fuze and the bursting charge.

Components, explosive train, n.o.s. Articles containing an explosive designed to transmit a detonation or deflagration within an explosive train.

ED_001691B_00009240

Consumer firework. Any finished firework device that is in a form intended for use by the public that complies with any limits and requirements of the APA Standard 87–1 (IBR, see § 171.7 of this subchapter) and the construction, performance, chemical composition, and labeling requirements codified by the U.S. Consumer Product Safety Commission in 16 CFR parts 1500 and 1507. A consumer firework does not include firework devices, kits or components banned by the U.S. Consumer Product Safety Commission in 16 CFR 1500.17 (a)(8).

Contrivance, water-activated with burster, expelling charge or propelling charge. Articles whose functioning depends of physico-chemical reaction of their contents with water.

Cord, detonating, flexible. Articles consisting of a core of detonating explosive enclosed in spun fabric with plastics or other covering.

Cord (fuse) detonating, metal clad. Articles consisting of a core of detonating explosive clad by a soft metal tube with or without protective covering. When the core contains a sufficiently small quantity of explosive, the words "mild effect" are added.

Cord igniter. Articles consisting of textile yarns covered with black powder or another fast-burning pyrotechnic composition and a flexible protective covering, or consisting of a core of black powder surrounded by a flexible woven fabric. It burns progressively along its length with an external flame and is used to transmit ignition from a device to a charge or primer.

Cutters, cable, explosive. Articles consisting of a knife-edged device which is driven by a small charge of deflagrating explosive into an anvil.

Detonator assemblies, non-electric, for blasting. Non-electric detonators assembled with and activated by such means as safety fuse, shock tube, flash tube, or detonating cord. They may be of instantaneous design or incorporate delay elements. Detonating relays incorporating detonating cord are included. Other detonating relays are included in Detonators, nonelectric.

Detonators. Articles consisting of a small metal or plastic tube containing explosives such as lead azide, PETN, or combinations of explosives. They are designed to start a detonation train. They may be constructed to detonate instantaneously, or may contain a delay element. They may contain no more than 10 g of total explosives weight, excluding ignition and delay charges, per unit. The term includes: detonators for ammunition; detonators for blasting, both electric and non-electric; and detonating relays without flexible detonating cord.

Dynamite. A detonating explosive containing a liquid explosive ingredient (generally nitroglycerin, similar organic nitrate esters, or both) that is uniformly mixed with an absorbent material, such as wood pulp, and usually contains materials such as nitrocellulose, sodium and ammonium nitrate.

Entire load and total contents. The phrase means such a substantial portion of the material explodes that the practical hazard should be assessed by assuming simultaneous explosion of the whole of the explosive content of the load or package.

Explode. The term indicates those explosive effects capable of endangering life and property through blast, heat, and projection of missiles. It encompasses both deflagration and detonation.

Explosion of the total contents. The phrase is used in testing a single article or package or a small stack of articles or packages.

Explosive, blasting. Detonating explosive substances used in mining, construction, and similar tasks. Blasting explosives are assigned to one of five types. In addition to the ingredients listed below for each type, blasting explosives may also contain inert components, such as kieselguhr, and other minor ingredients, such as coloring agents and stabilizers.

Explosive, blasting, type A. Substances consisting of liquid organic nitrates, such as nitroglycerin, or a mixture of such ingredients with one or more of the following: nitrocellulose, ammonium nitrate or other inorganic nitrates, aromatic nitro-derivatives, or combustible materials, such as woodmeal and aluminum powder. Such explosives must be in powdery, gelatinous, plastic or elastic form. The term

ED_001691B_00009240

includes dynamite, blasting gelatine and gelatine dynamites.

Explosive, blasting, type B. Substances consisting of a mixture of ammonium nitrate or other inorganic nitrates with an explosive, such as trinitrotoluene, with or without other substances, such as wood-meal or aluminum powder, or a mixture of ammonium nitrate or other inorganic nitrates with other combustible substances which are not explosive ingredients. Such explosives may not contain nitroglycerin, similar liquid organic nitrates, or chlorates.

Explosive, blasting, type C. Substances consisting of a mixture of either potassium or sodium chlorate or potassium, sodium or ammonium perchlorate with organic nitro-derivatives or combustible materials, such as wood-meal or aluminum powder, or a hydrocarbon. Such explosives must not contain nitroglycerin or any similar liquid organic nitrate.

Explosive, blasting, type D. Substances consisting of a mixture of organic nitrate compounds and combustible materials, such as hydrocarbons and aluminum powder. Such explosives must not contain nitroglycerin, any similar liquid organic nitrate, chlorate or ammonium-nitrate. The term generally includes plastic explosives.

Explosive, blasting, type E. Substances consisting of water as an essential ingredient and high proportions of ammonium nitrate or other oxidizer, some or all of which are in solution. The other constituents may include nitroderivatives, such as trinitrotoluene, hydrocarbons or aluminum powder. The term includes: explosives, emulsion; explosives, slurry; and explosives, watergel.

Explosive, deflagrating. A substance, e.g., propellant, which reacts by deflagration rather than detonation when ignited and used in its normal manner.

Explosive, detonating. A substance which reacts by detonation rather than deflagration when initiated and used in its normal manner.

Explosive, extremely insensitive substance (EIS). A substance that has demonstrated through tests that it is so insensitive that there is very little probability of accidental initiation.

Explosive, primary. Explosive substance which is manufactured with a view to producing a practical effect by explosion, is very sensitive to heat, impact, or friction, and even in very small quantities, detonates. The major primary explosives are mercury fulminate, lead azide, and lead styphnate.

Explosive, secondary. An explosive substance which is relatively insensitive (when compared to primary explosives) and is usually initiated by primary explosives with or without the aid of boosters or supplementary charges. Such an explosive may react as a deflagrating or as a detonating explosive.

Fireworks. Pyrotechnic articles designed for entertainment.

Flares. Articles containing pyrotechnic substances which are designed to illuminate, identify, signal, or warn. The term includes: flares, aerial and flares, surface.

Flash powder. Pyrotechnic substance which, when ignited, produces an intense light.

Fracturing devices, explosive, for oil wells, without detonators. Articles consisting of a charge of detonating explosive contained in a casing without the means of initiation. They are used to fracture the rock around a drill shaft to assist the flow of crude oil from the rock.

Fuse/Fuze. Although these two words have a common origin (French fusee, fusil) and are sometimes considered to be different spellings, it is useful to maintain the convention that fuse refers to a cord-like igniting device, whereas fuze refers to a device used in ammunition which incorporates mechanical, electrical, chemical, or hydrostatic components to initiate a train by deflagration or detonation.

Fuse, igniter. Articles consisting of a metal tube with a core of deflagrating explosives.

Fuse, instantaneous, non-detonating (Quickmatch). Article consisting of cotton yarns impregnated with fine black powder. It burns with an external flame and is used in ignition trains for fireworks, etc.

Fuse, safety. Article consisting of a core of fine-grained black powder surrounded by a flexible woven fabric with one or more protective outer coverings.

ED_001691B_00009240

When ignited, it burns at a predetermined rate without any explosive effect.

Fuzes. Articles designed to start a detonation or deflagration in ammunition. They incorporate mechanical, electrical, chemical, or hydrostatic components and generally protective features. The term includes: Fuzes, detonating; fuzes detonating with protective features; and fuzes igniting.

Grenades, hand or rifle. Articles which are designed to be thrown by hand or to be projected by rifle. The term includes: grenades, hand or rifle, with bursting charge; and grenades, practice, hand or rifle. The term excludes: grenades, smoke.

Igniters. Articles containing one or more explosive substance used to start deflagration of an explosive train. They may be actuated chemically, electrically, or mechanically. The term excludes: cord, igniter; fuse, igniter; fuse, instantaneous, non-detonating; fuze, igniting; lighters, fuse, instantaneous, non-detonating; fuzes, igniting; lighters, fuse; primers, cap type; and primers, tubular.

Ignition, means of. A general term used in connection with the method employed to ignite a deflagrating train of explosive or pyrotechnic substances (for example: a primer for propelling charge, an igniter for a rocket motor or an igniting fuze).

Initiation, means of. (1) A device intended to cause the detonation of an explosive (for example: detonator, detonator for ammunition, or detonating fuze).

(2) The term *with its own means of initiation* means that the contrivance has its normal initiating device assembled to it and this device is considered to present a significant risk during transport but not one great enough to be unacceptable. The term does not apply, however, to a contrivance packed together with its means of initiation, provided the device is packaged so as to eliminate the risk of causing detonation of the contrivance in the event of functioning of the initiating device. The initiating device can even be assembled in the contrivance provided there are protective features ensuring that the device is very unlikely to cause detonation of the contrivance under conditions which are associated with transport.

(3) For the purposes of classification, any means of initiation without two effective protective features should be regarded as Compatibility Group B; an article with its own means of initiation, without two effective protective features, is Compatibility Group F. A means of initiation which itself possesses two effective protective features is Compatibility Group D, and an article with its own means of initiation which possesses two effective features is Compatibility Group D or E. A means of initiation, adjudged as having two effective protective features, must be approved by the Associate Administrator. A common and effective way of achieving the necessary degree of protection is to use a means of initiation which incorporates two or more independent safety features.

Jet perforating guns, charged, oil well, without detonator. Articles consisting of a steel tube or metallic strip, into which are inserted shaped charges connected by detonating cord, without means of initiation.

Lighters, fuse. Articles of various design actuated by friction, percussion, or electricity and used to ignite safety fuse.

Mass explosion. Explosion which affects almost the entire load virtually instantaneously.

Mines. Articles consisting normally of metal or composition receptacles and bursting charge. They are designed to be operated by the passage of ships, vehicles, or personnel. The term includes Bangalore torpedoes.

Phlegmatized. The term means that a substance (or "phlegmatizer") has been added to an explosive to enhance its safety in handling and transport. The phlegmatizer renders the explosive insensitive, or less sensitive, to the following actions: heat, shock, impact, percussion or friction. Typical phlegmatizing agents include, but are not limited to: wax, paper, water, polymers (such as chlorofluoropolymers), alcohol and oils (such as petroleum jelly and paraffin).

Powder cake (powder paste). Substance consisting of nitrocellulose impregnated with not more than 60 percent of

ED_001691B_00009240

nitroglycerin or other liquid organic nitrates or a mixture of these.

Powder, smokeless. Substance based on nitrocellulose used as propellant. The term includes propellants with a single base (nitrocellulose (NC) alone), those with a double base (such as NC and nitroglycerin (NG)) and those with a triple base (such as NC/NG/nitroguanidine). Cast pressed or bag-charges of smokeless powder are listed under *charges, propelling* and *charges, propelling for cannon.*

Primers, cap type. Articles consisting of a metal or plastic cap containing a small amount of primary explosive mixture that is readily ignited by impact. They serve as igniting elements in small arms cartridges and in percussion primers for propelling charges.

Primers, tubular. Articles consisting of a primer for ignition and an auxiliary charge of deflagrating explosive, such as black powder, used to ignite the propelling charge in a cartridge case for cannon, etc.

Projectiles. Articles, such as a shell or bullet, which are projected from a cannon or other artillery gun, rifle, or other small arm. They may be inert, with or without tracer, or may contain a burster, expelling charge or bursting charge. The term includes: projectiles, inert, with tracer; projectiles, with burster or expelling charge; and projectiles, with bursting charge.

Propellant, liquid. Substances consisting of a deflagrating liquid explosive, used for propulsion.

Propellant, solid. Substances consisting of a deflagrating solid explosive, used for propulsion.

Propellants. Deflagrating explosives used for propulsion or for reducing the drag of projectiles.

Release devices, explosive. Articles consisting of a small charge of explosive with means of initiation. They sever rods or links to release equipment quickly.

Rocket motors. Articles consisting of a solid, liquid, or hypergolic propellant contained in a cylinder fitted with one or more nozzles. They are designed to propel a rocket or guided missile. The term includes: rocket motors; rocket motors with hypergolic liquids with or without an expelling charge; and rocket motors, liquid fuelled.

Rockets. Articles containing a rocket motor and a payload which may be an explosive warhead or other device. The term includes: guided missiles; rockets, line-throwing; rockets, liquid fuelled, with bursting charge; rockets, with bursting charge; rockets, with expelling charge; and rockets, with inert head.

Signals. Articles consisting of pyrotechnic substances designed to produce signals by means of sound, flame, or smoke or any combination thereof. The term includes: signal devices, hand; signals, distress ship; signals, railway track, explosive; signals, smoke.

Sounding devices, explosive. Articles consisting of a charge of detonating explosive. They are dropped from ships and function when they reach a predetermined depth or the sea bed.

Substance, explosive, very insensitive (Substance, EVI) N.O.S. Substances which present a mass explosive hazard but which are so insensitive that there is very little probability of initiation, or of transition from burning to detonation under normal conditions of transport and which have passed test series 5.

Torpedoes. Articles containing an explosive or non-explosive propulsion system and designed to be propelled through water. They may contain an inert head or warhead. The term includes: torpedoes, liquid fuelled, with inert head; torpedoes, liquid fuelled, with or without bursting charge; and torpedoes, with bursting charge.

Tracers for ammunition. Sealed articles containing pyrotechnic substances, designed to reveal the trajectory of a projectile.

Warheads. Articles containing detonating explosives, designed to be fitted to a rocket, guided missile, or torpedo. They may contain a burster or expelling charge or bursting charge. The term includes: warhead rocket with bursting charge; and warheads, torpedo, with bursting charge.

[Amdt. 173–224, 55 FR 52617 Dec. 21, 1990, as amended at 56 FR 66267, Dec. 20, 1991; Amdt. 173–241, 59 FR 67492, Dec. 29, 1994; 64 FR 10777, Mar. 5, 1999; 66 FR 45379, Aug. 28, 2001; 76 FR 3371, Jan. 19, 2011; 78 FR 1074, Jan. 7, 2013; 78 FR 42477, July 16, 2013]

ED_001691B_00009240

§ 173.60 General packaging requirements for explosives.

(a) Unless otherwise provided in this subpart and in § 173.7(a), packaging used for Class 1 (explosives) materials must meet Packing Group II requirements. Each packaging used for an explosive must be capable of meeting the test requirements of subpart M of part 178 of this subchapter, at the specified level of performance, and the applicable general packaging requirements of paragraph (b) of this section.

(b) The general requirements for packaging of explosives are as follows:

(1) Nails, staples, and other closure devices, made of metal, having no protective covering may not penetrate to the inside of the outer packaging unless the inner packaging adequately protects the explosive against contact with the metal.

(2) The closure device of containers for liquid explosives must provide double protection against leakage, such as a screw cap secured in place with tape.

(3) Inner packagings, fittings, and cushioning materials, and the placing of explosive substances or articles in packages, must be such that the explosive substance is prevented from becoming loose in the outer packaging during transportation. Metallic components of articles must be prevented from making contact with metal packagings. Articles containing explosive substances not enclosed in an outer casing must be separated from each other in order to prevent friction and impact. Padding, trays, partitioning in the inner or outer packaging, molded plastics or receptacles may be used for this purpose.

(4) When the packaging includes water that could freeze during transportation, a sufficient amount of anti-freeze, such as denatured ethyl alcohol, must be added to the water to prevent freezing. If the anti-freeze creates a fire hazard, it may not be used. When a percentage of water in the substance is specified, the combined weight of water and anti-freeze may be substituted.

(5) If an article is fitted with its own means of ignition or initiation, it must be effectively protected from accidental actuation during normal conditions of transportation.

(6) The entry of explosive substances into the recesses of double-seamed metal packagings must be prevented.

(7) The closure device of a metal drum must include a suitable gasket; if the closure device includes metal-to-metal screw-threads, the ingress of explosive substances into the threading must be prevented.

(8) Whenever loose explosive substances or the explosive substance of an uncased or partly cased article may come into contact with the inner surface of metal packagings (1A2, 1B2, 4A, 4B and metal receptacles), the metal packaging should be provided with an inner liner or coating.

(9) Packagings must be made of materials compatible with, and impermeable to, the explosives contained in the package, so that neither interaction between the explosives and the packaging materials, nor leakage, causes the explosive to become unsafe in transportation, or the hazard division or compatibility group to change (*see* § 173.24(e)(2)).

(10) An explosive article containing an electrical means of initiation that is sensitive to external electromagnetic radiation, must have its means of initiation effectively protected from electromagnetic radiation sources (for example, radar or radio transmitters) through either design of the packaging or of the article, or both.

(11) Plastic packagings may not be able to generate or accumulate sufficient static electricity to cause the packaged explosive substances or articles to initiate, ignite or inadvertently function. Metal packagings must be compatible with the explosive substance they contain.

(12) Explosive substances may not be packed in inner or outer packagings where the differences in internal and external pressures, due to thermal or other effects, could cause an explosion or rupture of the package.

(13) Packagings for water soluble substances must be water resistant. Packagings for desensitized or phlegmatized substances must be closed to prevent changes in concentration during transport. When containing less alcohol, water, or phlegmatizer than specified

ED_001691B_00009240

in its proper shipping description, the substance is a "forbidden" material.

(14) Large and robust explosives articles, normally intended for military use, without their means of initiation or with their means of initiation containing at least two effective protective features, may be carried unpackaged provided that a negative result was obtained in Test Series 4 of the UN Manual of Tests and Criteria on an unpackaged article. When such articles have propelling charges or are self-propelled, their ignition systems must be protected against conditions encountered during normal transportation. Such unpackaged articles may be fixed to cradles or contained in crates or other suitable handling, storage or launching devices in such a way that they will not become loose during normal conditions of transport and are in accordance with DOD-approved procedures. When such large explosive articles, as part of their operational safety and suitability tests, are subjected to testing that meets the intentions of Test Series 4 of the UN Manual of Tests and Criteria with successful test results, they may be offered for transportation in accordance with the requirements prescribed in (b)(14) above subject to approval by the Associate Administrator.

[Amdt. 173–260, 62 FR 24719, May 6, 1997, as amended at 65 FR 50461, Aug. 18, 2000; 76 FR 43529, July 20, 2011]

§ 173.61 Mixed packaging requirements.

(a) An explosive may not be packed in the same outside packaging with any other material that could, under normal conditions of transportation, adversely affect the explosive or its packaging unless packaged by DOD or DOE in accordance with § 173.7(a).

(b) Hardware necessary for assembly of explosive articles at the point-of-use may be packed in the same outside packaging with the explosive articles. The hardware must be securely packed in a separate inside packaging. Sufficient cushioning materials must be used to ensure that all inside packagings are securely packed in the outside packaging.

(c) The following explosives may not be packed together with other Class 1 explosives: UN 0029, UN 0030, UN 0073, UN 0106, UN 0107, UN 0255, UN 0257, UN 0267, UN 0350, UN 0360, UN 0361, UN 0364, UN 0365, UN 0366, UN 0367, UN 0408, UN 0409, UN 0410, UN 0455, UN 0456, and UN 0500. These explosives may be mixpacked with each other in accordance with the compatibility requirements prescribed in paragraph (e) of this section.

(d) Division 1.1 and 1.2 explosives may not be packed with the following explosives: UN 0333, UN 0334, UN 0335, UN 0336, and UN 0337.

(e) Except as prescribed in paragraphs (c) and (d) of this section, different explosives may be packed in one outside packaging in accordance with the following compatibility requirements:

(1) Explosives of the same compatibility group and same division number may be packed together.

(2) Explosives of the same compatibility group or authorized combination of compatibility group but different division number may be packed together, provided that the whole package is treated as though its entire contents were comprised of the lower division number. For example, a mixed package of Division 1.2 explosives and Division 1.4 explosives, compatibility group D, must be treated as 1.2D explosives. However, when 1.5D explosives are packed together with 1.2D explosives, the whole package must be treated as 1.1D explosives.

(3) Explosives of compatibility group S may be packaged together with explosives of any other compatibility group except A or L, and the combined package may be treated as belonging to any of the packaged compatibility groups except S.

(4) Explosives of compatibility group L shall only be packed with an identical explosive.

(5) Explosives articles of compatibility groups C, D, or E may be packed together and the entire package shall be treated as belonging to compatibility group E.

(6) Explosives articles of compatibility groups C, D, E, or N may be packed together and the entire package shall be treated as belonging to compatibility group D.

ED_001691B_00009240

(7) Explosives substances of compatibility groups C and D may be packaged together and the entire package shall be treated as belonging to compatibility group D.

(8) Explosive articles of compatibility group G, except for fireworks and articles requiring special packaging, may be packaged together with explosive articles of compatibility groups C, D or E and the combined package shall be treated as belonging to compatibility group E.

[Amdt. 173–224, 55 FR 52617 Dec. 21, 1990, as amended at 56 FR 66267, Dec. 20, 1991; 65 FR 50461, Aug. 18, 2000; 66 FR 33429, June 21, 2001; 66 FR 45381, Aug. 28, 2001; 69 FR 54046, Sept. 7, 2004; 73 FR 4717, Jan. 28 2008]

§ 173.62 Specific packaging requirements for explosives.

(a) Except as provided in § 173.7 of this subchapter, when the § 172.101 Table specifies that an explosive must be packaged in accordance with this section, only packagings which conform to the provisions of paragraphs (b) and (c) of this section or § 173.7(e) of this subchapter and the applicable requirements in §§ 173.60 and 173.61 may be used unless otherwise approved by the Associate Administrator.

(b) *Explosives Table.* The Explosives Table specifies the Packing Instructions assigned to each explosive. Explosives are identified in the first column in numerical sequence by their identification number (ID #), which is listed in column 4 of the § 172.101 table, of this subchapter. The second column of the Explosives Table specifies the Packing Instruction (PI) which must be used for packaging the explosive. The Explosives Packing Method Table in paragraph (c) of this section defines the methods of packaging. The Packing Instructions are identified using a 3 digit designation. The Packing Instruction prefixed by the letters "US" is particular to the United States and not found in applicable international regulations.

EXPLOSIVES TABLE

ID#	PI
UN0004	112
UN0005	130
UN0006	130
UN0007	130
UN0009	130
UN0010	130
UN0012	130
UN0014	130
UN0015	130
UN0016	130
UN0018	130
UN0019	130
UN0020	101
UN0021	101
UN0027	113
UN0028	113
UN0029	131
UN0030	131
UN0033	130
UN0034	130
UN0035	130
UN0037	130
UN0038	130
UN0039	130
UN0042	132
UN0043	133
UN0044	133
UN0048	130
UN0049	135
UN0050	135
UN0054	135
UN0055	136
UN0056	130
UN0059	137
UN0060	132
UN0065	139
UN0066	140
UN0070	134
UN0072	112(a)
UN0073	133
UN0074	110(a) or 110(b)
UN0075	115
UN0076	112
UN0077	114(a) or 114(b)
UN0078	112
UN0079	112(b) or 112(c)
UN0081	116
UN0082	116 or 117
UN0083	116
UN0084	116
UN0092	135
UN0093	135
UN0094	113
UN0099	134
UN0101	140
UN0102	139
UN0103	140
UN0104	139
UN0105	140
UN0106	141
UN0107	141
UN0110	141
UN0113	110(a) or 110(b)
UN0114	110(a) or 110(b)
UN0118	112
UN0121	142
UN0124	US1
UN0129	110(a) or 110(b)
UN0130	110(a) or 110(b)
UN0131	142
UN0132	114(b)
UN0133	112(a)
UN0135	110(a) or 110(b)
UN0136	130
UN0137	130
UN0138	130

ED_001691B_00009240

EXPLOSIVES TABLE—Continued

ID#	PI
UN0143	115
UN0144	115
UN0146	112
UN0147	112(b)
UN0150	112(a) or 112(b)
UN0151	112
UN0153	112(b) or 112(c)
UN0154	112
UN0155	112(b) or 112(c)
UN0159	111
UN0160	114(b)
UN0161	114(b)
UN0167	130
UN0168	130
UN0169	130
UN0171	130
UN0173	134
UN0174	134
UN0180	130
UN0181	130
UN0182	130
UN0183	130
UN0186	130
UN0190	101
UN0191	135
UN0192	135
UN0193	135
UN0194	135
UN0195	135
UN0196	135
UN0197	135
UN0204	134
UN0207	112(b) or 112(c)
UN0208	112(b) or 112(c)
UN0209	112
UN0212	133
UN0213	112(b) or 112(c)
UN0214	112
UN0215	112
UN0216	112(b) or 112(c)
UN0217	112(b) or 112(c)
UN0218	112(b) or 112(c)
UN0219	112
UN0220	112
UN0221	130
UN0222	112(b), 112(c) or 117
UN0224	110(a) or 110(b)
UN0225	133
UN0226	112(a)
UN0234	114(a) or 114(b)
UN0235	114(a) or 114(b)
UN0236	114(a) or 114(b)
UN0237	138
UN0238	130
UN0240	130
UN0241	116 or 117
UN0242	130
UN0243	130
UN0244	130
UN0245	130
UN0246	130
UN0247	101
UN0248	144
UN0249	144
UN0250	101
UN0254	130
UN0255	131
UN0257	141
UN0266	112
UN0267	131
UN0268	133
UN0271	143

EXPLOSIVES TABLE—Continued

ID#	PI
UN0272	143
UN0275	134
UN0276	134
UN0277	134
UN0278	134
UN0279	130
UN0280	130
UN0281	130
UN0282	112
UN0283	132
UN0284	141
UN0285	141
UN0286	130
UN0287	130
UN0288	138
UN0289	139
UN0290	139
UN0291	130
UN0292	141
UN0293	141
UN0294	130
UN0295	130
UN0296	134
UN0297	130
UN0299	130
UN0300	130
UN0301	130
UN0303	130
UN0305	113
UN0306	133
UN0312	135
UN0313	135
UN0314	142
UN0315	142
UN0316	141
UN0317	141
UN0318	141
UN0319	133
UN0320	133
UN0321	130
UN0322	101
UN0323	134
UN0324	130
UN0325	142
UN0326	130
UN0327	130
UN0328	130
UN0329	130
UN0330	130
UN0331	116 or 117
UN0332	116 or 117
UN0333	135
UN0334	135
UN0335	135
UN0336	135
UN0337	135
UN0338	130
UN0339	130
UN0340	112(a) or 112(b)
UN0341	112(b)
UN0342	114(a)
UN0343	111
UN0344	130
UN0345	130
UN0346	130
UN0347	130
UN0348	130
UN0349	101
UN0350	101
UN0351	101
UN0352	101
UN0353	101

ED_001691B_00009240

EXPLOSIVES TABLE—Continued

ID#	PI
UN0354	101
UN0355	101
UN0356	101
UN0357	101
UN0358	101
UN0359	101
UN0360	131
UN0361	131
UN0362	130
UN0363	130
UN0364	133
UN0365	133
UN0366	133
UN0367	141
UN0368	141
UN0369	130
UN0370	130
UN0371	130
UN0372	141
UN0373	135
UN0374	134
UN0375	134
UN0376	133
UN0377	133
UN0378	133
UN0379	136
UN0380	101
UN0381	134
UN0382	101
UN0383	101
UN0384	101
UN0385	112(b) or 112(c)
UN0386	112(b) or 112(c)
UN0387	112(b) or 112(c)
UN0388	112(b) or 112(c)
UN0389	112(b) or 112(c)
UN0390	112(b) or 112(c)
UN0391	112(a)
UN0392	112(b) or 112(c)
UN0393	112(b)
UN0394	112(a)
UN0395	101
UN0396	101
UN0397	101
UN0398	101
UN0399	101
UN0400	101
UN0401	112
UN0402	112(b) or 112(c)
UN0403	135
UN0404	135
UN0405	135
UN0406	114(b)
UN0407	114(b)
UN0408	141
UN0409	141
UN0410	141
UN0411	112(b) or 112(c)
UN0412	130
UN0413	130
UN0414	130
UN0415	143
UN0417	130
UN0418	135
UN0419	135
UN0420	135
UN0421	135
UN0424	130
UN0425	130
UN0426	130
UN0427	130
UN0428	135

EXPLOSIVES TABLE—Continued

ID#	PI
UN0429	135
UN0430	135
UN0431	135
UN0432	135
UN0433	111
UN0434	130
UN0435	130
UN0436	130
UN0437	130
UN0438	130
UN0439	137
UN0440	137
UN0441	137
UN0442	137
UN0443	137
UN0444	137
UN0445	137
UN0446	136
UN0447	136
UN0448	114(b)
UN0449	101
UN0450	101
UN0451	130
UN0452	141
UN0453	130
UN0454	142
UN0455	131
UN0456	131
UN0457	130
UN0458	130
UN0459	130
UN0460	130
UN0461	101
UN0462	101
UN0463	101
UN0464	101
UN0465	101
UN0466	101
UN0467	101
UN0468	101
UN0469	101
UN0470	101
UN0471	101
UN0472	101
UN0473	101
UN0474	101
UN0475	101
UN0476	101
UN0477	101
UN0478	101
UN0479	101
UN0480	101
UN0481	101
UN0482	101
UN0483	112(b) or 112(c)
UN0484	112(b) or 112(c)
UN0486	101
UN0487	135
UN0488	130
UN0489	112(b) or 112(c)
UN0490	112(b) or 112(c)
UN0491	143
UN0492	135
UN0493	135
UN0494	US1
UN0495	115
UN0496	112(b) or 112(c)
UN0497	115
UN0498	114(b)
UN0499	114(b)
UN0500	131
UN0501	114(b)

ED_001691B_00009240

EXPLOSIVES TABLE—Continued

ID#	PI
UN0502	130
UN0503	135
UN0504	112(c)
UN0505	135
UN0506	135
UN0507	135
UN0508	114(b)
UN0509	114(b)
NA0124	US1
NA0276	134
NA0323	134
NA0331	116 or 117
NA0337	135
NA0349	133
NA0494	US1

(c) Explosives must be packaged in accordance with the following table:

(1) The first column lists, in alphanumeric sequence, the packing methods prescribed for explosives in the Explosives Table of paragraph (b) of this section.

(2) The second column specifies the inner packagings that are required. If inner packagings are not required, a notation of "Not necessary" appears in the column. The term "Not necessary" means that a suitable inner packaging may be used but is not required.

(3) The third column specifies the intermediate packagings that are required. If intermediate packagings are not required, a notation of "Not necessary" appears in the column. The term "Not necessary" means that a suitable intermediate packaging may be used but is not required.

(4) The fourth column specifies the outer packagings which are required. If inner packagings and/or intermediate packagings are specified in the second and third columns, then the packaging specified in the fourth column must be used as the outer packaging of a combination packaging; otherwise it may be used as a single packaging.

(5) Packing Instruction 101 may be used for any explosive substance or article if an equivalent level of safety is shown to be maintained subject to the approval of the Associate Administrator.

TABLE OF PACKING METHODS

Packing instruction	Inner packagings	Intermediate packagings	Outer packagings
101	This Packing Instruction may be used as an alternative to a specifically assigned packing method with the approval of the Associate Administrator prior to transportation. When this packing instruction is used, the following must be marked on the shipping documents: "Packaging approved by the competent authority of the United States of America (USA)".		
PARTICULAR PACKING REQUIREMENTS OR EXCEPTIONS: 1. Samples of new or existing explosive substances or articles may be transported as directed by the Associate Administrator for purposes including: testing, classification, research and development, quality control, or as a commercial sample. Explosive samples which are wetted or desensitized must be limited to 25 kg. Explosive samples which are not wetted or desensitized must be limited to 10 kg in small packages as specified by the Associate Administrator for Hazardous Materials Safety			
110(a)	Bags plastics, textile, plastic coated or lined. rubber textile, rubberized textile Receptacles wood	Bags plastics, textile, plastic coated or lined. rubber textile, rubberized- Receptacles plastics metal wood	Drums. steel (1A1 or 1A2). other metal (1N1 or 1N2). plastics-(1H1 or 1H2).
PARTICULAR PACKING REQUIREMENTS OR EXCEPTIONS:. 1. The Intermediate packagings must be filled with water saturated material such as an anti-freeze solution or wetted cushioning. 2. Outer packagings must be filled with water saturated material such as an anti-freeze solution or wetted cushioning. Outer packagings must be constructed and sealed to prevent evaporation of the wetting solution, except when 0224 is being carried dry.			
110(b)	Bags	Dividing partitions	Boxes.

ED_001691B_00009240

TABLE OF PACKING METHODS—Continued

Packing instruction	Inner packagings	Intermediate packagings	Outer packagings
PARTICULAR PACKING REQUIREMENTS OR EXCEPTIONS For UN 0074, 0113, 0114, 0129, 0130, 0135 and 0224, the following conditions must be satisfied: a. inner packagings must not contain more than 50 g of explosive substance (quantity corresponding to dry substance); b. each inner packaging must be separated from other inner packagings by dividing partitions; and c. the outer packaging must not be partitioned with more than 25 compartments	rubber, conductive plastics, conductive Receptacles metal wood rubber, conductive plastics, conductive	metal wood plastics fibreboard	natural wood, sift-proof wall (4C2). plywood (4D). reconstituted wood (4F).
111	Bags paper, water-proofed. plastics textile, rubberized Sheets plastics textile, rubberized Receptacles wood	Not necessary	Boxes. steel (4A). aluminum (4B). other metal (4N). natural wood, ordinary (4C1). natural wood, sift proof (4C2). plywood (4D). reconstituted wood (4F). fiberboard (4G). plastics, expanded (4H1). plastics, solid (4H2). Drums steel (1A1 or 1A2). aluminum (1B1 or 1B2). other metal (1N1 or 1N2). plywood (1D). fiberboard (1G). plastics (1H1 or 1H2).
PARTICULAR PACKING REQUIREMENTS OR EXCEPTIONS:. For UN0159, inner packagings are not required when metal (1A1, 1A2, 1B1, 1B2, 1N1 or 1N2) or plastics (1H1 or 1H2) drums are used as outer packagings.			
112(a)	Bags paper, multiwall, water resistant. plastics textile textile, rubberized woven plastics Receptacles metal plastics wood	Bags plastics textile, plastic coated or lined. Receptacles metal plastics wood	Boxes. steel (4A). aluminum (4B). other metal (4N). natural wood, ordinary (4C1). natural wood, sift proof (4C2). plywood (4D). reconstituted wood (4F). fiberboard (4G). plastics, expanded (4H1). plastics, solid (4H2). Drums steel (1A1 or 1A2). aluminum (1B1 or 1B2). other metal (1N1 or 1N2). plywood (1D). fiber (1G). plastics (1H1 or 1H2).
PARTICULAR PACKING REQUIREMENTS OR EXCEPTIONS:. 1. For UN Nos. 0004, 0076, 0078, 0154, 0219 and 0394, packagings must be lead free. 2. Intermediate packagings are not required if leakproof drums are used as the outer packaging. 3. For UN0072 and UN0226, intermediate packagings are not required.			
112(b)	Bags	Bags	Bags.

ED_001691B_00009240

TABLE OF PACKING METHODS—Continued

Packing instruction	Inner packagings	Intermediate packagings	Outer packagings
This packing instruction applies to dry solids other than powders. PARTICULAR PACKING REQUIREMENTS OR EXCEPTIONS:. 1. For UN 0004, 0076, 0078, 0154, 0216, 0219 and 0386, packagings must be lead free. 2. For UN0209, bags, sift-proof (5H2) are recommended for flake or prilled TNT in the dry state and a maximum net mass of 30 kg.. 3. For UN0222, inner packagings are not required.	paper, Kraft ..... paper, multiwall, water resistant. plastics ..... textile ..... textile, rubberized plastics. woven plastics	(for UN0150 only) plastics ..... textile, plastic coated or lined.	woven plastics sift-proof (5H2/3). plastics, film (5H4). textile, sift-proof (5L2). textile, water resistant (5L3). paper, multiwall, water resistant (5M2). Boxes steel (4A). aluminum (4B). other metal (4N). natural wood, ordinary (4C1). natural wood, sift proof (4C2). plywood (4D) reconstituted wood (4F). fiberboard (4G). plastics, expanded (4H1). plastics, solid (4H2). Drums steel (1A1 or 1A2). aluminum (1B1 or 1B2). plywood (1D). other metal (1N1 or 1N2). fiber (1G). plastics (1H1 or 1H2).
112(c) This packing instruction applies to solid dry powders.	Bags	Bags	Boxes.
PARTICULAR PACKING REQUIREMENTS OR EXCEPTIONS:. 1. For UN 0004, 0076, 0078, 0154, 0216, 0219 and 0386, packagings must be lead free. 2. For UN0209, bags, sift-proof (5H2) are recommended for flake or prilled TNT in the dry state. Bags must not exceed a maximum net mass of 30 kg.. 3. Inner packagings are not required if drums are used as the outer packaging.. 4. At least one of the packagings must be sift-proof.	paper, multiwall, water resistant. plastics ..... woven plastics ..... Receptacles fiberboard ..... metal ..... plastics ..... wood	paper, multiwall, water resistant with inner lining. plastics ..... Receptacles metal ..... plastics ..... wood	steel (4A). aluminum (4B). other metal (4N). natural wood, ordinary (4C1). natural wood, sift proof (4C2). plywood (4D). reconstituted wood (4F). fiberboard (4G). plastics, solid (4H2). Drums. plastics (1H1 or 1H2). steel (1A1 or 1A2). aluminum (1B1 or 1B2). other metal (1N1 or 1N2). plywood (1D). fiber (1G).
113	Bags	Not necessary	Boxes.

ED_001691B_00009240

TABLE OF PACKING METHODS—Continued

Packing instruction	Inner packagings	Intermediate packagings	Outer packagings
PARTICULAR PACKING REQUIREMENTS OR EXCEPTIONS:. 1. For UN0094 and UN0305, no more than 50 g of substance must be packed in an inner packaging. 2. For UN0027, inner packagings are not necessary when drums are used as the outer packaging. 3. At least one of the packagings must be sift-proof. 4. Sheets must only be used for UN0028.	paper plastics textile, rubberized Receptacles fiberboard metal plastics wood Sheets paper, kraft paper, waxed		steel (4A). aluminum (4B). other metal (4N). natural wood, ordinary (4C1). natural wood, sift-proof walls (4C2). plywood (4D). reconstituted wood (4F). fiberboard (4G). plastics, solid (4H2). Drums plastics (1H1 or 1H2). steel (1A1 or 1A2). aluminum-(1B1 or 1B2). other metal (1N1 or 1N2). plywood (1D). fiber (1G).
114(a)	Bags	Bags	Boxes
This packing instruction applies to wetted solids PARTICULAR PACKING REQUIREMENTS OR EXCEPTIONS:. 1. For UN 0077, 0234, 0235 and 0236, packagings must be lead free. 2. For UN0342, inner packagings are not required when metal (1A1, 1A2, 1B1, 1B2, 1N1 or 1N2) or plastics (1H1 or 1H2) drums are used as outer packagings. 3. Intermediate packagings are not required if leakproof removable head drums are used as the outer packaging.	plastics textile woven plastics Receptacles metal plastics wood	plastics textile, plastic coated or lined. Receptacles metal plastics Dividing partitions wood	steel (4A). other metal (4N). natural wood, ordinary (4C1). natural wood, sift proof walls (4C2). plywood (4D). reconstituted wood (4F). fiberboard (4G). plastics, solid (4H2). Drums. steel (1A1 or 1A2). aluminum (1B1 or 1B2). other metal (1N1 or 1N2) plywood (1D). fiber (1G). plastics (1H1 or 1H2).
114(b)	Bags	Not necessary	Boxes
PARTICULAR PACKING REQUIREMENTS OR EXCEPTIONS:. 1. For UN Nos. 0077, 0132, 0234, 0235 and 0236, packagings must be lead free. 2. For UN0160 and UN0161, when metal drums (1A2, 1B2 or 1N2) are used as the outer packaging, metal packagings must be so constructed that the risk of explosion, by reason of increased internal pressure from internal or external causes, is prevented. 3. For UN0160, UN0161, and UN0508, inner packagings are not necessary if drums are used as the outer packaging. 4. For UN0508 and UN0509, metal packagings must not be used.	paper, kraft plastics textile, sift-proof woven plastics, sift-proof.. Receptacles fiberboard metal paper plastics wood woven plastics, sift-proof..		natural wood, ordinary (4C1). natural wood, sift-proof walls (4C2). plywood (4D). reconstituted wood (4F). fiberboard (4G). Drums. steel (1A1 or 1A2). aluminum (1B1 or 1B2). other metal (1N1 or 1N2). plywood (1D). fiber (1G). plastics (1H1 or 1H2).
115	Receptacles	Bags	Boxes

ED_001691B_00009240

TABLE OF PACKING METHODS—Continued

Packing instruction	Inner packagings	Intermediate packagings	Outer packagings
PARTICULAR PACKING REQUIREMENTS OR EXCEPTIONS:. 1. For liquid explosives, inner packagings must be surrounded with non-combustible absorbent cushioning material in sufficient quantity to absorb the entire liquid content. Metal receptacles should be cushioned from each other. The net mass of explosive per package may not exceed 30 kg when boxes are used as outer packaging. The net volume of explosive in each package other than boxes must not exceed 120 liters. 2. For UN 0075, 0143, 0495 and 0497 when boxes are used as the outer packaging, inner packagings must have taped screw cap closures and be not more than 5 liters capacity each. A composite packaging consisting of a plastic receptacle in a metal drum (6HA1) may be used in lieu of combination packagings. Liquid substances must not freeze at temperatures above −15 °C (+ 5 °F). 3. For UN0144, intermediate packagings are not necessary. Aluminum drums (1B1 and 1B2) and metal, other than steel or aluminum, drums (1N1 and 1N2) must not be used..	metal ..... plastics ..... wood	plastics in metal receptacles. Drums ..... metal ..... Receptacles ..... wood	natural wood, ordinary (4C1). natural wood, sift proof walls (4C2). plywood (4D). reconstituted wood (4F). fiberboard (4G). Drums. plastics (1H1 or 1H2). steel (1A1 or 1A2). aluminum (1B1 or 1B2). other metal (1N1 or 1N2). plywood (1D). fiber (1G). Specification MC–200 containers may be used for transport by motor vehicle.
116	Bags	Not necessary	Bags.
PARTICULAR PACKING REQUIREMENTS OR EXCEPTIONS: 1. For UN 0082, 0241, 0331 and 0332, inner packagings are not necessary if leakproof removable head drums are used as the outer packaging. 2. For UN 0082, 0241, 0331 and 0332, inner packagings are not required when the explosive is contained in a material impervious to liquid. 3. For UN 0081, inner packagings are not required when contained in rigid plastic that is impervious to nitric esters. 4. For UN 0331, inner packagings are not required when bags (5H2), (5H3) or (5H4) are used as outer packagings. 5. For UN0081, bags must not be used as outer packagings.	paper, water and oil resistant plastics. textile, plastic coated or lined woven plastics, sift-proof Receptacles ..... fiberboard, water resistant metal. plastics ..... wood, sift-proof ..... Sheets ..... paper, water resistant. paper, waxed ..... plastics		woven plastics (5H1/2/3). paper, multiwall, water resistant (5M2). plastics, film (5H4). textile, sift-proof (5L2). textile, water resistant (5L3). Boxes. steel (4A). aluminum (4B). other metal (4N). wood, natural, ordinary (4C1). natural wood, sift proof walls (4C2). plywood (4D). reconstituted wood (4F). fiberboard (4G). plastics, solid (4H2). Drums. steel (1A1 or 1A2). aluminum (1B1 or 1B2). other metal (1N1 or 1N2). plywood (1D). fiber (1G). plastics (1H1 or 1H2). Jerricans. steel (3A1 or 3A2). plastics (3H1 or 3H2).
117	Not necessary	Not necessary	IBCs.

ED_001691B_00009240

TABLE OF PACKING METHODS—Continued

Packing instruction	Inner packagings	Intermediate packagings	Outer packagings
PARTICULAR PACKING REQUIREMENTS OR EXCEPTIONS: 1. This packing instruction may only be used for explosives of UN 0082 when they are mixtures of ammonium nitrate or other inorganic nitrates with other combustible substances that are not explosive ingredients. Such explosives must not contain nitroglycerin, similar liquid organic nitrates, liquid or solid nitrocarbons, or chlorates. 2. This packing instruction may only be used for explosives of UN 0241 that consist of water as an essential ingredient and high proportions of ammonium nitrate or other oxidizers, some or all of which are in solution. The other constituents may include hydrocarbons or aluminum powder, but must not include nitro-derivatives such as trinitrotoluene. 3. Metal IBCs must not be used for UN 0082, UN 0222 and UN 0241. 4. Flexible IBCs may only be used for solids. 5. For UN 0222, when other than metal or rigid plastics IBCs are used, they must be offered for transportation in a closed freight container or a closed transport vehicle. 6. For UN 0222, flexible IBCs must be sift-proof and water-resistant or must be fitted with a sift-proof and water-resistant liner.			metal (11A), (11B), (11N), (21A), (21B), (21N), (31A), (31B), (31N). flexible (13H2), (13H3), (13H4), (13L2), (13L3), (13L4), (13M2). rigid plastics (11H1), (11H2), (21H1), (21H2), (31H1), (31H2). composite (11HZ1), (11HZ2), (21HZ1), (21HZ2), (31HZ1), (31HZ2).
130	Not necessary	Not necessary	Boxes.
Particular Packaging Requirements:			
1. The following applies to UN 0006, 0009, 0010, 0015, 0016, 0018, 0019, 0034, 0035, 0038, 0039, 0048, 0056, 0137, 0138, 0168, 0169, 0171, 0181, 0182, 0183, 0186, 0221, 0238, 0243, 0244, 0245, 0246, 0254, 0280, 0281, 0286, 0287, 0297, 0299, 0300, 0301, 0303, 0321, 0328, 0329, 0344, 0345, 0346, 0347, 0362, 0363, 0370, 0412, 0424, 0425, 0434, 0435, 0436, 0437, 0438, 0451, 0459 and 0488. Large and robust explosives articles, normally intended for military use, without their means of initiation or with their means of initiation containing at least two effective protective features, may be carried unpackaged. When such articles have propelling charges or are self-propelled, their ignition systems must be protected against stimuli encountered during normal conditions of transport. A negative result in Test Series 4 on an unpackaged article indicates that the article can be considered for transport unpackaged. Such unpackaged articles may be fixed to cradles or contained in crates or other suitable handling devices. 2. Subject to approval by the Associate Administrator, large explosive articles, as part of their operational safety and suitability tests, subjected to testing that meets the intentions of Test Series 4 of the UN Manual of Tests and Criteria with successful test results, may be offered for transportation in accordance with the requirements of this subchapter			Steel (4A). Aluminum (4B). Other metal (4N). Wood natural, ordinary (4C1). Wood natural, sift-proof walls (4C2). Plywood (4D). Reconstituted wood (4F). Fiberboard (4G). Plastics, expanded (4H1). Plastics, solid (4H2). Drums. Steel (1A1 or 1A2). Aluminum (1B1 or 1B2). Other metal (1N1 or 1N2). Plywood (1D). Fiber (1G). Plastics (1H1 or 1H2). Large Packagings. Steel (50A). Aluminum (50B). Metal other than steel or aluminum (50N). Rigid plastics (50H). Natural wood (50C). Plywood (50D). Reconstituted wood (50F). Rigid fiberboard (50G).
131	Bags	Not necessary	Boxes.

ED_001691B_00009240

TABLE OF PACKING METHODS—Continued

Packing instruction	Inner packagings	Intermediate packagings	Outer packagings
PARTICULAR PACKING REQUIREMENTS OR EXCEPTIONS: 1. For UN 0029, 0267 and 0455, bags and reels may not be used as inner packagings. 2. For UN 0030, 0255 and 0456, inner packagings are not required when detonators are packed in pasteboard tubes, or when their leg wires are wound on spools with the caps either placed inside the spool or securely taped to the wire on the spool, so as to restrict free moving of the caps and to protect them from impact forces. 3. For UN 0360, 0361 and 0500, detonators are not required to be attached to the safety fuse, metal-clad mild detonating cord, detonating cord, or shock tube. Inner packagings are not required if the packing configuration restricts free moving of the caps and protects them from impact forces.	paper plastics Receptacles fiberboard metal plastics wood Reels		steel (4A). aluminum (4B). other metal (4N). wood, natural, ordinary (4C1). natural wood, sift proof walls (4C2). plastics, solid (4H2). plywood (4D). reconstituted wood (4F). fiberboard (4G). Drums. steel (1A1 or 1A2). Aluminum (1B1 or 1B2). other metal (1N1 or 1N2). Plywood (1D). fiber (1G). plastics (1H1 or 1H2).
132(a)	Not necessary	Not necessary	Boxes
For articles consisting of closed metal, plastic or fiberboard casings that contain detonating explosives, or consisting of plastics-bonded detonating explosives.			steel (4A). aluminum (4B). other metal (4N). wood, natural; ordinary (4C1). wood, natural, sift proof walls (4C2). plywood (4D). reconstituted wood (4F). fiberboard (4G). plastics, solid (4H2).
132(b)	Receptacles	Not necessary	Boxes
For articles without closed casings	fiberboard metal plastics wood Sheets paper plastics		steel (4A). aluminum (4B). other metal (4N). wood, natural, ordinary (4C1). wood, natural, sift proof walls (4C2). plywood (4D). reconstituted wood (4F). fiberboard (4G). plastics, solid (4H2).
133	Receptacles		Boxes.
PARTICULAR PACKING REQUIREMENTS OR EXCEPTIONS:. 1. For UN 0043, 0212, 0225, 0268 and 0306 trays are not authorized as inner packagings.	fiberboard metal plastics wood Trays, fitted with dividing partitions fiberboard plastics wood	Intermediate packagings are only required when trays are used as inner packagings.. Receptacles fiberboard metal plastics wood	steel (4A). aluminum (4B). other metal (4N). wood, natural, ordinary (4C1). wood, natural, sift proof walls (4C2). plywood (4D). reconstituted wood (4F). fiberboard (4G). plastics, solid (4H2).
134	Bags	Not necessary	Boxes.

ED_001691B_00009240

TABLE OF PACKING METHODS—Continued

Packing instruction	Inner packagings	Intermediate packagings	Outer packagings
.....	water resistant ..... Receptacles fiberboard ..... metal ..... plastics ..... wood ..... Sheets fiberboard, corrugated. Tubes fiberboard		steel (4A). aluminum (4B). other metal (4N). wood, natural, ordinary (4C1). wood, natural, sift proof walls (4C2). plywood (4D). reconstituted wood (4F). fiberboard (4G). plastics, expanded (4H1). plastics, solid (4H2). Drums. fiberboard (1G). plastics (1H1 or 1H2). steel (1A1 or 1A2). aluminum (1B1 or 1B2). other metal (1N1 or 1N2). plywood (1D).
135	Bags	Not necessary	Boxes.
.....	paper ..... plastics ..... Receptacles fiberboard ..... metal ..... plastics ..... wood ..... Sheets paper ..... plastics		steel (4A). aluminum (4B). other metal (4N). wood, natural, ordinary (4C1). wood, natural, sift proof walls (4C2). plywood (4D). reconstituted wood (4F). fiberboard (4G). plastics, expanded (4H1). plastics, solid (4H2). Drums. steel (1A1 or 1A2). aluminum (1B1 or 1B2). other metal (1N1 or 1N2) plywood (1D). fiber (1G). plastics (1H1 or 1H2).
136	Bags	Not necessary	Boxes.

ED_001691B_00009240

TABLE OF PACKING METHODS—Continued

Packing instruction	Inner packagings	Intermediate packagings	Outer packagings
.....	plastics ..... textile ..... Boxes. fiberboard ..... plastics ..... wood ..... Dividing partitions in the outer packagings		steel (4A). aluminum (4B) other metal (4N). wood, natural, ordinary (4C1). wood, natural, sift proof walls (4C2). plywood (4D). reconstituted wood (4F). fiberboard (4G). plastics, solid (4H2). Drums. steel (1A1 or 1A2). aluminum (1B1 or 1B2). other metal (1N1 or 1N2). plywood (1D). fiber (1G). plastics (1H1 or 1H2).
137	Bags	Not necessary	Boxes.
PARTICULAR PACKING REQUIREMENTS OR EXCEPTIONS: For UN 0059, 0439, 0440 and 0441, when the shaped charges are packed singly, the conical cavity must face downwards and the package marked "THIS SIDE UP". When the shaped charges are packed in pairs, the conical cavities must face inwards to minimize the jetting effect in the event of accidental initiation.	plastics ..... Boxes ..... fiberboard ..... wood ..... Tubes ..... fiberboard ..... metal ..... plastics ..... Dividing partitions in the outer packagings.		steel (4A). aluminum (4B). other metal (4N). wood, natural, ordinary (4C1). wood, natural, sift proof walls (4C2). plastics, solid (4H2). plywood (4D). reconstituted wood (4F). fiberboard (4G). Drums. steel (1A1 or 1A2). aluminum (1B1 or 1B2). other metal (1N1 or 1N2). plywood (1D). fiber (1G). plastics (1H1 or 1H2).
138	Bags	Not necessary	Boxes.

ED_001691B_00009240

TABLE OF PACKING METHODS—Continued

Packing instruction	Inner packagings	Intermediate packagings	Outer packagings
PARTICULAR PACKING REQUIREMENTS OR EXCEPTIONS:. If the ends of the articles are sealed, inner packagings are not necessary.	Plastics		steel (4A). aluminum (4B). other metal (4N). wood, natural, ordinary (4C1). wood, natural, sift proof walls (4C2). plywood (4D). reconstituted wood (4F). fiberboard (4G). plastics, solid (4H2). Drums. fiberboard (1G). plastics (1H1 or 1H2). steel (1A1 or 1A2). aluminum (1B1 or 1B2). other metal (1N1 or 1N2).
139	Bags plastics	Not necessary	Boxes. steel (4A). aluminum (4B). other metal (4N). wood, natural, ordinary (4C1). wood, natural, sift proof walls (4C2). plywood (4D). reconstituted wood (4F). fiberboard (4G). plastics, solid (4H2). Drums. steel (1A1 or 1A2). aluminum (1B1 or 1B2). other metal (1N1 or 1N2). plywood (1D). fiber (1G). plastics (1H1 or 1H2).
PARTICULAR PACKING REQUIREMENTS OR EXCEPTIONS:. 1. For UN 0065, 0102, 0104, 0289 and 0290, the ends of the detonating cord must be sealed, for example, by a plug firmly fixed so that the explosive cannot escape. The ends of CORD DETONATING flexible must be fastened securely. 2. For UN0065 and UN0289, inner packagings are not required when they are fastened securely in coils.	Receptacles fiberboard metal plastics wood Reels Sheets paper plastics		
140	Bags	Not necessary	Boxes.

ED_001691B_00009240

TABLE OF PACKING METHODS—Continued

Packing instruction	Inner packagings	Intermediate packagings	Outer packagings
PARTICULAR PACKING REQUIREMENTS OR EXCEPTIONS:. 1. If the ends of UN0105 are sealed, no inner packagings are required. 2. For UN0101, the packaging must be sift-proof except when the fuse is covered by a paper tube and both ends of the tube are covered with removable caps. 3. For UN0101, steel or aluminum boxes or drums must not be used.	plastics Reels Sheets paper, kraft plastics Receptacles wood		steel (4A). aluminum (4B). other metal (4N). wood, natural, ordinary (4C1). wood, natural, sift proof walls (4C2). plywood (4D). reconstituted wood (4F). fiberboard (4G). plastics, solid (4H2). Drums. plastics (1H1 or 1H2). steel (1A1 or 1A2). aluminum (1B1 or 1B2). other metal (1N1 or 1N2). plywood (1D). fiber (1G).
141	Receptacles fiberboard metal plastics wood Trays, fitted with dividing partitions plastics wood Dividing partitions in the outer packagings	Not necessary	Boxes. steel (4A). aluminum (4B). other metal (4N). wood, natural, ordinary (4C1). wood, natural, sift proof walls (4C2). plywood (4D). reconstituted wood (4F). fiberboard (4G). plastics, solid (4H2). Drums. steel (1A1 or 1A2). aluminum (1B1 or 1B2). other metal (1N1 or 1N2). plywood (1D). fiber (1G). plastics (1H1 or 1H2).
142	Bags	Not necessary	Boxes.

ED_001691B_00009240

TABLE OF PACKING METHODS—Continued

Packing instruction	Inner packagings	Intermediate packagings	Outer packagings
.....	paper ..... plastics ..... Receptacles fiberboard ..... metal ..... plastics ..... wood ..... Sheets paper ..... Trays, fitted with dividing partitions plastics		steel (4A). aluminum (4B). other metal (4N). wood, natural, ordinary (4C1). wood, natural, sift proof walls (4C2). plywood (4D). reconstituted wood (4F). fiberboard (4G). plastics, solid (4H2). Drums. steel (1A1 or 1A2). aluminum (1B1 or 1B2). other metal (1N1 or 1N2). plywood (1D). fiber (1G). plastics (1H1 or 1H2).
143	Bag	Not necessary	Boxes.
PARTICULAR PACKING REQUIREMENTS OR EXCEPTIONS:. 1. For UN 0271, 0272, 0415 and 0491 when metal packagings are used, metal packagings must be so constructed that the risk of explosion, by reason of increase in internal pressure from internal or external causes is prevented. 2. Composite packagings (6HH2) (plastic receptacle with outer solid box) may be used in lieu of combination packagings.	paper, kraft ..... plastics ..... textile ..... textile, rubberized .. Receptacles fiberboard ..... metal ..... plastics ..... wood ..... Trays, fitted with dividing partitions plastics ..... wood		steel (4A). aluminum (4B). other metal (4N). wood, natural, ordinary (4C1). wood, natural, sift proof walls (4C2). plywood (4D). reconstituted wood (4F). fiberboard (4G). plastics, solid (4H2). Drums. steel (1A1 or 1A2). aluminum (1B1 or 1B2). other metal (1N1 or 1N2). plywood (1D). fiber (1G). plastics (1H1 or 1H2).
144	Receptacles	Not necessary	Boxes.

ED_001691B_00009240

TABLE OF PACKING METHODS—Continued

Packing instruction	Inner packagings	Intermediate packagings	Outer packagings
PARTICULAR PACKING REQUIREMENTS OR EXCEPTIONS:. For UN0248 and UN 0249, packagings must be protected against the ingress of water. When CONTRIVANCES, WATER ACTIVATED are transported unpackaged, they must be provided with at least two independent protective features that prevent the ingress of water.	fiberboard ..... metal ..... plastics ..... wood ..... Dividing partitions in the outer packagings		steel (4A). aluminum (4B) other metal (4N). wood, natural, ordinary (4C1) with metal liner. plywood (4D) with metal liner. reconstituted wood (4F) with metal liner. plastics, expanded (4H1). plastics, solid (4H2). Drums. steel (1A1 or 1A2). aluminum (1B1 or 1B2). other metal (1N1 or 1N2). plastics (1H1 or 1H2). plywood (1D).

US 1

1. A jet perforating gun, charged, oil well may be transported under the following conditions:

a. Initiation devices carried on the same motor vehicle or offshore supply vessel must be segregated; each kind from every other kind, and from any gun, tool or other supplies, unless approved in accordance with § 173.56. Segregated initiation devices must be carried in a container having individual pockets for each such device or in a fully enclosed steel container lined with a non-sparking material. No more than two segregated initiation devices per gun may be carried on the same motor vehicle.

b. Each shaped charge affixed to the gun may not contain more than 112 g (4 ounces) of explosives.

c. Each shaped charge if not completely enclosed in glass or metal, must be fully protected by a metal cover after installation in the gun.

d. A jet perforating gun classed as 1.1D or 1.4D may be transported by highway by private or contract carriers engaged in oil well operations.

(i) A motor vehicle transporting a gun must have specially built racks or carrying cases designed and constructed so that the gun is securely held in place during transportation and is not subject to damage by contact, one to the other or any other article or material carried in the vehicle; and

(ii) The assembled gun packed on the vehicle may not extend beyond the body of the motor vehicle.

e. A jet perforating gun classed as 1.4D may be transported by a private offshore supply vessel only when the gun is carried in a motor vehicle as specified in paragraph (d) of this packing method or on offshore well tool pallets provided that:

(i) All the conditions specified in paragraphs (a), (b), and (c) of this packing method are met;

(ii) The total explosive contents do not exceed 90.8 kg (200 pounds) per tool pallet;

(iii) Each cargo vessel compartment may contain up to 90.8 kg (200 pounds) of explosive content if the segregation requirements in § 176.83(b) of this subchapter are met; and

(iv) When more than one vehicle or tool pallet is stowed "on deck" a minimum horizontal separation of 3 m (9.8 feet) must be provided.

[Amdt. 173–260, 62 FR 24720, May 6, 1997]

EDITORIAL NOTE: For FEDERAL REGISTER citations affecting § 173.62, see the List of CFR Sections Affected, which appears in the Finding Aids section of the printed volume and at *www.fdsys.gov*.

§ 173.63 Packaging exceptions.

(a) Cord, detonating (UN 0065), having an explosive content not exceeding 6.5 g (0.23 ounces) per 30 centimeter length (one linear foot) may be offered for transportation domestically and transported as Cord, detonating (UN 0289), Division 1.4 Compatibility Group D (1.4D) explosives, if the gross weight of all packages containing Cord, detonating (UN 0065), does not exceed 45 kg (99 pounds) per:

(1) Transport vehicle, freight container, or cargo-only aircraft;

(2) Off-shore down-hole tool pallet carried on an off-shore supply vessel;

(3) Cargo compartment of a cargo vessel; or

(4) Passenger-carrying aircraft used to transport personnel to remote work sites, such as offshore drilling units.

ED_001691B_00009240

(b) *Limited quantities of Cartridges, small arms, Cartridges, power device, Cartridges for tools, blank, and Cases, cartridge, empty with primer.* (1)(i) Cartridges, small arms, Cartridges, power device (*used to project fastening devices*), Cartridges for tools, blank, and Cases, cartridge, empty with primer that have been classed as Division 1.4S explosive may be offered for transportation and transported as limited quantities when packaged in accordance with paragraph (b)(2) of this section. Packages containing such articles may be marked with either the marking prescribed in § 172.315(a) or (b) of this subchapter and offered for transportation and transported by any mode. For transportation by aircraft, the package must conform to the applicable requirements of § 173.27 of this part. In addition, packages containing such articles offered for transportation by aircraft must be marked with the proper shipping name as prescribed in the § 172.101 Hazardous Materials Table of this subchapter. Packages containing such articles are not subject to the shipping paper requirements of subpart C of part 172 of this subchapter unless the material meets the definition of a hazardous substance, hazardous waste, marine pollutant, or is offered for transportation and transported by aircraft or vessel. Additionally, packages containing such articles are excepted from the requirements of subparts E (Labeling) and F (Placarding) of part 172 of this subchapter.

(ii) Until December 31, 2012, a package containing such articles may be marked with the proper shipping name "Cartridges, small arms" or "Cartridges, power device (*used to project fastening devices*)" and reclassed as "ORM–D–AIR" material if it contains properly packaged articles as authorized by this subchapter on October 1, 2010. Additionally, for transportation by aircraft, Cartridge, power devices must be successfully tested under the UN Test Series 6(d) criteria for reclassification as ORM–D–AIR material effective July 1, 2011. Until December 31, 2020, a package containing such articles may be marked with the proper shipping name "Cartridges, small arms" or "Cartridges, power device (*used to project fastening devices*)," "Cartridges for tools, blank," and "Cases, cartridge empty with primer" and reclassed as "ORM–D" material if it contains properly packaged articles as authorized by this subchapter on October 1, 2010.

(iii) Cartridges, small arms, Cartridges, power device (*used to project fastening devices*), Cartridges for tools, blank, and Cases, cartridge empty with primer that may be shipped as a limited quantity or ORM–D material are as follows:

(A) Ammunition for rifle, pistol or shotgun;

(B) Ammunition with inert projectiles or blank ammunition;

(C) Ammunition having no tear gas, incendiary, or detonating explosive projectiles;

(D) Ammunition not exceeding 12.7 mm (50 caliber or 0.5 inch) for rifle or pistol, cartridges or 8 gauge for shotshells;

(E) Cartridges for tools, blank; and

(F) Cases, cartridge, empty with primer.

(G) Cartridges, power device (*used to project fastening devices*).

(2) Packaging for Cartridges, small arms, Cartridges for tools, blank, Cases, cartridge empty with primer, and eligible Cartridges, power device as limited quantity or ORM–D material must be as follows:

(i) Ammunition must be packed in inside boxes, or in partitions that fit snugly in the outside packaging, or in metal clips;

(ii) Primers must be protected from accidental initiation;

(iii) Inside boxes, partitions or metal clips must be packed in securely-closed strong outside packagings;

(iv) Maximum gross weight is limited to 30 kg (66 pounds) per package; and

(v) Cartridges for tools, blank, Cartridges, power devices which are used to project fastening devices, Cases, cartridge, empty with primer, and 22 caliber rim-fire cartridges may be packaged loose in strong outside packagings.

(c)–(e) [Reserved]

(f) Detonators containing no more than 1 g explosive (excluding ignition and delay charges) that are electric blasting caps with leg wires 4 feet long or longer, delay connectors in plastic

ED_001691B_00009240

sheaths, or blasting caps with empty plastic tubing 12 feet long or longer may be packed as follows in which case they are excepted from the packaging requirements of § 173.62:

(1) No more than 50 detonators in one inner packaging;

(2) IME Standard 22 container (IBR, see § 171.7 of this subchapter) or compartment is used as the outer packaging;

(3) No more than 1000 detonators in one outer packaging; and

(4) No material may be loaded on top of the IME Standard 22 container and no material may be loaded against the outside door of the IME Standard 22 compartment.

(g) Detonators that are classed as 1.4B or 1.4S and contain no more than 1 g of explosive (excluding ignition and delay charges) may be packed as follows in which case they are excepted from the packaging requirements of § 173.62:

(1) No more than 50 detonators in one inner packaging;

(2) IME Standard 22 container is used as the outer packaging;

(3) No more than 1000 detonators in one outer packaging; and

(4) Each inner packaging is marked "1.4B Detonators" or "1.4S Detonators", as appropriate.

[Amdt. 173–224, 55 FR 52617, Dec. 21, 1990, as amended at 56 FR 66268, Dec. 20, 1991; Amdt. 173–236, 58 FR 50536, Sept. 24, 1993; Amdt. 173–253, 61 FR 27175, May 30, 1996; 68 FR 75743, Dec. 31, 2003; 71 FR 14602, Mar. 22, 2006; 76 FR 3371, Jan. 19, 2011; 78 FR 1084, 1113, Jan. 7, 2013; 78 FR 65480, Oct. 31, 2013]

§ 173.64 Exceptions for Division 1.3 and 1.4 fireworks.

(a) Notwithstanding the requirements of § 173.56(b), Division 1.3 and 1.4 fireworks (see § 173.65 for Division 1.4G consumer fireworks) may be classed and approved by the Associate Administrator without prior examination and offered for transportation if the following conditions are met:

(1) The fireworks are manufactured in accordance with the applicable requirements in APA Standard 87–1 (IBR, see § 171.7 of this subchapter);

(2) The device must pass a thermal stability test conducted by a third-party laboratory, or the manufacturer. The test must be performed by maintaining the device, or a representative prototype of a large device such as a display shell, at a temperature of 75 °C (167 °F) for 48 consecutive hours. When a device contains more than one component, those components that could be in physical contact with each other in the finished device must be placed in contact with each other during the thermal stability test;

(3) The manufacturer applies in writing to the Associate Administrator following the applicable requirements in APA Standard 87–1, and is notified in writing by the Associate Administrator that the fireworks have been classed, approved, and assigned an EX number. Each application must be complete and include all relevant background data and copies of all applicable drawings, test results, and any other pertinent information on each device for which approval is being requested. The manufacturer must sign the application and certify that the device for which approval is requested conforms to APA Standard 87–1, that the descriptions and technical information contained in the application are complete and accurate, and that no duplicate application has been submitted to a fireworks certification agency. If the application is denied, the manufacturer will be notified in writing of the reasons for the denial. The Associate Administrator may require that the fireworks be examined by an agency listed in § 173.56(b)(1).

(b) [Reserved]

[78 FR 42477, July 16, 2013]

§ 173.65 Exceptions for Division 1.4G consumer fireworks.

(a) Notwithstanding the requirements of §§ 173.56(b), 173.56(f), 173.56(i), and 173.64, Division 1.4G consumer fireworks may be offered for transportation provided the following conditions are met:

(1) The fireworks are manufactured in accordance with the applicable requirements in APA Standard 87–1 (IBR, see § 171.7 of this subchapter);

(2) The device must pass a thermal stability test. The test must be performed by maintaining the device, or a representative prototype of the device, at a temperature of 75 °C (167 °F) for 48 consecutive hours. When a device

ED_001691B_00009240

contains more than one component, those components that could be in physical contact with each other in the finished device must be placed in contact with each other during the thermal stability test;

(3) The manufacturer of the Division 1.4G consumer firework applies in writing to a DOT-approved Fireworks Certification Agency, and is notified in writing by the DOT-approved Fireworks Certification Agency that the firework has been:

(i) Certified that it complies with APA Standard 87–1, and meets the requirements of this section; and

(ii) Assigned an FC number.

(4) The manufacturer's application must be complete and include:

(i) Detailed diagram of the device;

(ii) Complete list of the chemical compositions, formulations and quantities used in the device;

(iii) Results of the thermal stability test; and

(iv) Signed certification declaring that the device for which certification is requested conforms to the APA Standard 87–1, that the descriptions and technical information contained in the application are complete and accurate, and that no duplicate applications have been submitted to PHMSA. If the application is denied, the Fireworks Certification Agency must notify the manufacturer in writing of the reasons for the denial. As detailed in the DOT-approval issued to the Fireworks Certification Agency, following the issuance of a denial from a Fireworks Certification Agency, a manufacturer may seek reconsideration from the Fireworks Certification Agency, or may appeal the reconsideration decision of the Fireworks Certification Agency to PHMSA's Administrator.

(b) *Recordkeeping requirements.* Following the certification of each Division 1.4G consumer firework as permitted by paragraph (a) of this section, the manufacturer and importer must maintain a paper record or an electronic image of the certificate, demonstrating compliance with this section. Each record must clearly provide the unique identifier assigned to the firework device and the Fireworks Certification Agency that certified the device. The record must be accessible at or through its principal place of business and be made available, upon request, to an authorized official of a Federal, State, or local government agency at a reasonable time and location. Copies of certification records must be maintained by each importer, manufacturer, or a foreign manufacturer's U.S. agent, for five (5) years after the device is imported. The certification record must be made available to a representative of PHMSA upon request.

[78 FR 42477, July 16, 2013]

Subpart D—Definitions Classification, Packing Group Assignments and Exceptions for Hazardous Materials Other Than Class 1 and Class 7

SOURCE: Amdt. 173–224, 55 FR 52634 Dec. 21, 1990, unless otherwise noted.

§ 173.115 Class 2, Divisions 2.1, 2.2, and 2.3—Definitions.

(a) *Division 2.1 (Flammable gas).* For the purpose of this subchapter, a *flammable gas* (Division 2.1) means any material which is a gas at 20 °C (68 °F) or less and 101.3 kPa (14.7 psia) of pressure (a material which has a boiling point of 20 °C (68 °F) or less at 101.3 kPa (14.7 psia)) which—

(1) Is ignitable at 101.3 kPa (14.7 psia) when in a mixture of 13 percent or less by volume with air; or

(2) Has a flammable range at 101.3 kPa (14.7 psia) with air of at least 12 percent regardless of the lower limit. Except for aerosols, the limits specified in paragraphs (a)(1) and (a)(2) of this section shall be determined at 101.3 kPa (14.7 psia) of pressure and a temperature of 20 °C (68 °F) in accordance with the ASTM E681–85, Standard Test Method for Concentration Limits of Flammability of Chemicals or other equivalent method approved by the Associate Administrator. The flammability of aerosols is determined by the tests specified in paragraph (l) of this section.

(b) Division 2.2 (*non-flammable, non-poisonous compressed gas—including compressed gas, liquefied gas, pressurized cryogenic gas, compressed gas in solution, asphyxiant gas and oxidizing gas*). For

ED_001691B_00009240

the purpose of this subchapter, a non-flammable, nonpoisonous compressed gas (Division 2.2) means any material (or mixture) which—

(1) Exerts in the packaging a gauge pressure of 200 kPa (29.0 psig/43.8 psia) or greater at 20 °C (68 °F), is a liquefied gas or is a cryogenic liquid, and

(2) Does not meet the definition of Division 2.1 or 2.3.

(c) *Division 2.3 (Gas poisonous by inhalation).* For the purpose of this subchapter, a *gas poisonous by inhalation* (Division 2.3) means a material which is a gas at 20 °C (68 °F) or less and a pressure of 101.3 kPa (14.7 psia) (a material which has a boiling point of 20 °C (68 °F) or less at 101.3 kPa (14.7 psia)) and which—

(1) Is known to be so toxic to humans as to pose a hazard to health during transportation, or

(2) In the absence of adequate data on human toxicity, is presumed to be toxic to humans because when tested on laboratory animals it has an LC_{50} value of not more than 5000 mL/m^3 (see §173.116(a) of this subpart for assignment of Hazard Zones A, B, C or D). LC_{50} values for mixtures may be determined using the formula in §173.133(b)(1)(i) or CGA P–20 (IBR, see §171.7 of this subchapter).

(d) *Non-liquefied compressed gas.* A gas, which when packaged under pressure for transportation is entirely gaseous at −50 °C (−58 °F) with a critical temperature less than or equal to −50 °C (−58 °F), is considered to be a non-liquefied compressed gas.

(e) *Liquefied compressed gas.* A gas, which when packaged under pressure for transportation is partially liquid at temperatures above −50 °C (−58 °F), is considered to be a liquefied compressed gas. A liquefied compressed gas is further categorized as follows:

(1) *High pressure liquefied gas* which is a gas with a critical temperature between −50 °C (−58 °F) and + 65 °C (149 °F), and

(2) *Low pressure liquefied gas* which is a gas with a critical temperature above + 65 °C (149 °F).

(f) *Compressed gas in solution.* A *compressed gas in solution* is a non-liquefied compressed gas which is dissolved in a solvent.

(g) *Cryogenic liquid.* A *cryogenic liquid* means a refrigerated liquefied gas having a boiling point colder than −90 °C (−130 °F) at 101.3 kPa (14.7 psia) absolute. A material meeting this definition is subject to requirements of this subchapter without regard to whether it meets the definition of a non-flammable, non-poisonous compressed gas in paragraph (b) of this section.

(h) *Flammable range.* The term *flammable range* means the difference between the minimum and maximum volume percentages of the material in air that forms a flammable mixture.

(i) *Service pressure.* The term *service pressure* means the authorized pressure marking on the packaging. For example, for a cylinder marked "DOT 3A1800", the service pressure is 12410 kPa (1800 psig).

(j) *Refrigerant gas or Dispersant gas.* The terms *Refrigerant gas* and *Dispersant gas* apply to all nonpoisonous refrigerant gases; dispersant gases (fluorocarbons) listed in §172.101 of this subchapter and §§173.304, 173.314(c), 173.315(a), and 173.315(h) and mixtures thereof; and any other compressed gas having a vapor pressure not exceeding 260 psia at 54 °C(130 °F), used only as a refrigerant, dispersant, or blowing agent.

(k) For Division 2.2 gases, the oxidizing ability shall be determined by tests or by calculation in accordance with ISO 10156 (including Technical Corrigendum 1) (IBR, see §171.7 of this subchapter).

(l) The following applies to aerosols (see §171.8 of this subchapter):

(1) An aerosol must be assigned to Division 2.1 if the contents include 85% by mass or more flammable components and the chemical heat of combustion is 30 kJ/g or more;

(2) An aerosol must be assigned to Division 2.2 if the contents contain 1% by mass or less flammable components and the heat of combustion is less than 20 kJ/g.

(3) Aerosols not meeting the provisions of paragraphs (l)(1) or (l)(2) of this section must be classed in accordance with the appropriate tests of the UN Manual of Tests and Criteria (IBR, see §171.7 of this subchapter). An aerosol which was tested in accordance

ED_001691B_00009240

with the requirements of this subchapter in effect on December 31, 2005, is not required to be retested.

(4) Division 2.3 gases may not be transported in an aerosol container.

(5) When the contents are classified as Division 6.1, PG III or Class 8, PG II or III, the aerosol must be assigned a subsidiary hazard of Division 6.1 or Class 8, as appropriate.

(6) Substances of Division 6.1, PG I or II, and substances of Class 8, PG I are forbidden from transportation in an aerosol container.

(7) Flammable components are Class 3 flammable liquids, Division 4.1 flammable solids, or Division 2.1 flammable gases. The chemical heat of combustion must be determined in accordance with the UN Manual of Tests and Criteria (IBR, see § 171.7 of this subchapter).

(m) *Adsorbed gas.* A gas which when packaged for transport is adsorbed onto a solid porous material resulting in an internal receptacle pressure of less than 101.3 kPa at 20 °C and less than 300 kPa at 50 °C.

[Amdt. 173–224, 55 FR 52634, Dec. 21, 1990]

EDITORIAL NOTE: For FEDERAL REGISTER citations affecting § 173.115, see the List of CFR Sections Affected, which appears in the Finding Aids section of the printed volume and at *www.fdsys.gov*.

§ 173.116 Class 2—Assignment of hazard zone.

(a) The hazard zone of a Class 2, Division 2.3 material is assigned in column 7 of the § 172.101 table. There are no hazard zones for Divisions 2.1 and 2.2. When the § 172.101 table provides more than one hazard zone for a Division 2.3 material, or indicates that the hazard zone be determined on the basis of the grouping criteria for Division 2.3, the hazard zone shall be determined by applying the following criteria:

Hazard zone	Inhalation toxicity
A	LC_{50} less than or equal to 200 ppm.
B	LC_{50} greater than 200 ppm and less than or equal to 1000 ppm.
C	LC_{50} greater than 1000 ppm and less than or equal to 3000 ppm.
D	LC_{50} greater than 3000 ppm or less than or equal to 5000 ppm.

(b) The criteria specified in paragraph (a) of this section are represented graphically in § 173.133, Figure 1.

[Amdt. 173–224, 55 FR 52634, Dec. 21, 1990, as amended at 56 FR 66268, Dec. 20, 1991; Amdt. 173–138, 59 FR 49133, Sept. 26, 1994; 67 FR 61013, Sept. 27, 2002]

§§ 173.117–173.119 [Reserved]

§ 173.120 Class 3—Definitions.

(a) *Flammable liquid.* For the purpose of this subchapter, a *flammable liquid* (Class 3) means a liquid having a flash point of not more than 60 °C (140 °F), or any material in a liquid phase with a flash point at or above 37.8 °C (100 °F) that is intentionally heated and offered for transportation or transported at or above its flash point in a bulk packaging, with the following exceptions:

(1) Any liquid meeting one of the definitions specified in § 173.115.

(2) Any mixture having one or more components with a flash point of 60 °C (140 °F) or higher, that make up at least 99 percent of the total volume of the mixture, if the mixture is not offered for transportation or transported at or above its flash point.

(3) Any liquid with a flash point greater than 35 °C (95 °F) that does not sustain combustion according to ASTM D 4206 (IBR, see § 171.7 of this subchapter) or the procedure in appendix H of this part.

(4) Any liquid with a flash point greater than 35 °C (95 °F) and with a fire point greater than 100 °C (212 °F) according to ISO 2592 (IBR, see § 171.7 of this subchapter).

(5) Any liquid with a flash point greater than 35 °C (95 °F) which is in a water-miscible solution with a water content of more than 90 percent by mass.

(b) Combustible liquid. (1) For the purpose of this subchapter, a *combustible liquid* means any liquid that does not meet the definition of any other hazard class specified in this subchapter and has a flash point above 60 °C (140 °F) and below 93 °C (200 °F).

(2) A flammable liquid with a flash point at or above 38 °C (100 °F) that does not meet the definition of any other hazard class may be reclassed as a combustible liquid. This provision does not apply to transportation by vessel or aircraft, except where other

ED_001691B_00009240

means of transportation is impracticable. An elevated temperature material that meets the definition of a Class 3 material because it is intentionally heated and offered for transportation or transported at or above its flash point may not be reclassed as a combustible liquid.

(3) A combustible liquid that does not sustain combustion is not subject to the requirements of this subchapter as a combustible liquid. Either the test method specified in ASTM D 4206 or the procedure in appendix H of this part may be used to determine if a material sustains combustion when heated under test conditions and exposed to an external source of flame.

(c) Flash point. (1) *Flash point* means the minimum temperature at which a liquid gives off vapor within a test vessel in sufficient concentration to form an ignitable mixture with air near the surface of the liquid. It shall be determined as follows:

(i) For a homogeneous, single-phase, liquid having a viscosity less than 45 S.U.S. at 38 °C (100 °F) that does not form a surface film while under test, one of the following test procedures shall be used:

(A) Standard Method of Test for Flash Point by Tag Closed Cup Tester, (ASTM D 56) (IBR; *see* §171.7 of this subchapter);

(B) Standard Test Methods for Flash Point of Liquids by Small Scale Closed-Cup Apparatus, (ASTM D 3278) (IBR; *see* §171.7 of this subchapter); or

(C) Standard Test Methods for Flash Point by Small Scale Closed Tester, (ASTM D 3828) (IBR; *see* §171.7 of this subchapter).

(ii) For a liquid other than one meeting all the criteria of paragraph (c)(1)(i) of this section, one of the following test procedures must be used:

(A) Standard Test Methods for Flash Point by Pensky-Martens Closed Cup Tester, (ASTM D 93) (IBR; *see* §171.7 of this subchapter). For cutback asphalt, use Method B of ASTM D 93 or alternative tests authorized in this standard;

(B) Standard Test Methods for Flash Point of Liquids by Small Scale Closed-Cup Apparatus (ASTM D 3278) (IBR; *see* §171.7 of this subchapter);

(C) Determination of Flash/No Flash—Closed Cup Equilibrium Method (ISO 1516) (IBR; *see* §171.7 of this subchapter);

(D) Determination of Flash point—Closed Cup Equilibrium Method (ISO 1523) (IBR; *see* §171.7 of this subchapter);

(E) Determination of Flash Point—Pensky-Martens Closed Cup Method (ISO 2719) (IBR; *see* §171.7 of this subchapter);

(F) Determination of Flash Point—Rapid Equilibrium Closed Cup Method (ISO 3679) (IBR; *see* §171.7 of this subchapter);

(G) Determination of Flash/No Flash—Rapid Equilibrium Closed Cup Method (ISO 3680) (IBR; *see* §171.7 of this subchapter); or

(H) Determination of Flash Point—Abel Closed-Cup Method (ISO 13736) (IBR; *see* §171.7 of this subchapter).

(2) For a liquid that is a mixture of compounds that have different volatility and flash points, its flash point shall be determined as specified in paragraph (c)(1) of this section, on the material in the form in which it is to be shipped. If it is determined by this test that the flash point is higher than −7 °C (20 °F) a second test shall be made as follows: a portion of the mixture shall be placed in an open beaker (or similar container) of such dimensions that the height of the liquid can be adjusted so that the ratio of the volume of the liquid to the exposed surface area is 6 to one. The liquid shall be allowed to evaporate under ambient pressure and temperature (20 to 25 °C (68 to 77 °F)) for a period of 4 hours or until 10 percent by volume has evaporated, whichever comes first. A flash point is then run on a portion of the liquid remaining in the evaporation container and the lower of the two flash points shall be the flash point of the material.

(3) For flash point determinations by Setaflash closed tester, the glass syringe specified need not be used as the method of measurement of the test sample if a minimum quantity of 2 mL (0.1 ounce) is assured in the test cup.

(d) If experience or other data indicate that the hazard of a material is greater or less than indicated by the criteria specified in paragraphs (a) and

ED_001691B_00009240

(b) of this section, the Associate Administrator may revise the classification or make the material subject or not subject to the requirements of parts 171 through 185 of this subchapter.

(e) *Transitional provisions.* The Class 3 classification criteria in effect on December 31, 2006, may continue to be used until January 1, 2012.

[Amdt. 173–224, 55 FR 52634 Dec. 21, 1990, as amended by Amdt. 173–227, 56 FR 49989, Oct. 2, 1991; 56 FR 66268, Dec. 20, 1991; 57 FR 45461, Oct. 1, 1992; Amdt. 173–241, 59 FR 67506, 67507, Dec. 29, 1994; Amdt. 173–255, 61 FR 50625, Sept. 26, 1996; Amdt. 173–261, 62 FR 24731, May 6, 1997; 66 FR 45379, 45381, Aug. 28, 2001; 68 FR 75743, Dec. 31, 2003; 71 FR 78631, Dec. 29, 2006; 76 FR 3371, Jan. 19, 2011; 76 FR 43529, July 20, 2011; 76 FR 56316, Sept. 13, 2011]

§ 173.121 Class 3—Assignment of packing group.

(a)(1) The packing group of a Class 3 material is as assigned in column 5 of the § 172.101 Table. When the § 172.101 Table provides more than one packing group for a hazardous material, the packing group must be determined by applying the following criteria:

Packing group	Flash point (closed-cup)	Initial boiling point
I		≤35 °C (95 °F)
II	<23 °C (73 °F)	>35 °C (95 °F)
III	≥23 °C, ≤60 °C (≥73 °F, ≤140 °F)	>35 °C (95 °F)

(2) The initial boiling point of a Class 3 material may be determined by using one of the following test methods:

(i) Standard Test Method for Distillation of Petroleum Products at Atmospheric Pressure (ASTM D 86) (IBR; *see* § 171.7 of this subchapter);

(ii) Standard Test Method for Distillation Range of Volatile Organic Liquids (ASTM D 1078) (IBR; *see* § 171.7 of this subchapter);

(iii) Petroleum Products—Determination of Distillation Characteristics at Atmospheric Pressure (ISO 3405) (IBR; *see* § 171.7 of this subchapter);

(iv) Petroleum Products—Determination of Boiling Range Distribution—Gas Chromatography Method (ISO 3924) (IBR; *see* § 171.7 of this subchapter); or

(v) Volatile Organic Liquids—Determination of Boiling Range of Organic Solvents Used as Raw Materials (ISO 4626) (IBR; *see* § 171.7 of this subchapter).

(b) *Criteria for inclusion of viscous Class 3 materials in Packing Group III.* (1) Viscous Class 3 materials in Packing Group II with a flash point of less than 23 °C (73 °F) may be grouped in Packing Group III provided that—

(i) Less than 3 percent of the clear solvent layer separates in the solvent separation test;

(ii) The mixture or any separated solvent does not contain any substances with a primary or a subsidiary risk of Division 6.1 or Class 8;

(iii) The capacity of the packaging is not more than 30 L (7.9 gallons); except that for transportation by highway, rail or cargo aircraft, the capacity of the package is not more than 100 L (26.3 gallons); and

(iv) The viscosity and flash point are in accordance with the following table:

Flow time t in seconds	Jet diameter in mm	Flash point c.c.
20<t≤60	4	above 17 °C (62.6 °F).
60<t≤100	4	above 10 °C (50 °F).
20<t≤32	6	above 5 °C (41 °F).
32<t≤44	6	above −1 °C (31.2 °F).
44<t≤100	6	above −5 °C (23 °F).
100<t	6	−5 °C (23 °F) and below.

(2) The methods by which the tests referred to in paragraph (b)(1) of this section shall be performed are as follows:

(i) *Viscosity test.* The flow time in seconds is determined at 23 °C (73.4 °F) using the ISO standard cup with a 4 mm (0.16 inch) jet as set forth in ISO 2431 (IBR, see § 171.7 of this subchapter). Where the flow time exceeds 100 seconds, a further test is carried out using the ISO standard cup with a 6 mm (0.24 inch) jet.

(ii) *Solvent Separation Test.* This test is carried out at 23 °C (73 °F) using a 100.0 mL(3 ounces) measuring cylinder of the stoppered type of approximately 25.0 cm (9.8 inches) total height and of a uniform internal diameter of approximately 30 mm (1.2 inches) over the calibrated section. The sample should be stirred to obtain a uniform consistency, and poured in up to the 100 mL (3 ounces) mark. The stopper should be inserted and the cylinder left standing undisturbed for 24 hours. After 24

ED_001691B_00009240

hours, the height of the upper separated layer should be measured and the percentage of this layer as compared with the total height of the sample calculated.

(c) *Transitional provisions.* The criteria for packing group assignments in effect on December 31, 2006, may continue to be used until January 1, 2012.

[Amdt. 173–224, 55 FR 52634, Dec. 21, 1990, as amended at 56 FR 66268, Dec. 20, 1991; Amdt. 173–241, 59 FR 67507, Dec. 29, 1994 Amdt. 173–255, 61 FR 50625, Sept. 26, 1996; 64 FR 10777, Mar. 5, 1999; 64 FR 51918, Sept. 27, 1999; 66 FR 45381, Aug. 28, 2001; 68 FR 75744, Dec. 31, 2003; 71 FR 78631, Dec. 29, 2006; 76 FR 3372, Jan. 19, 2011; 76 FR 43529, July 20, 2011; 78 FR 1085, Jan. 7, 2013; 80 FR 1156, Jan. 8, 2015]

§ 173.124 Class 4, Divisions 4.1, 4.2 and 4.3—Definitions.

(a) *Division 4.1 (Flammable Solid).* For the purposes of this subchapter, *flammable solid* (Division 4.1) means any of the following three types of materials:

(1) Desensitized explosives that—

(i) When dry are Explosives of Class 1 other than those of compatibility group A, which are wetted with sufficient water, alcohol, or plasticizer to suppress explosive properties; and

(ii) Are specifically authorized by name either in the §172.101Table or have been assigned a shipping name and hazard class by the Associate Administrator under the provisions of—

(A) A special permit issued under subchapter A of this chapter; or

(B) An approval issued under §173.56(i) of this part.

(2)(i) Self-reactive materials are materials that are thermally unstable and that can undergo a strongly exothermic decomposition even without participation of oxygen (air). A material is excluded from this definition if any of the following applies:

(A) The material meets the definition of an explosive as prescribed in subpart C of this part, in which case it must be classed as an explosive;

(B) The material is forbidden from being offered for transportation according to §172.101 of this subchapter or §173.21;

(C) The material meets the definition of an oxidizer or organic peroxide as prescribed in subpart D of this part, in which case it must be so classed;

(D) The material meets one of the following conditions:

(*1*) Its heat of decomposition is less than 300 J/g; or

(*2*) Its self-accelerating decomposition temperature (SADT) is greater than 75 °C (167 °F) for a 50 kg package; or

(*3*) It is an oxidizing substance in Division 5.1 containing less than 5.0% combustible organic substances; or

(E) The Associate Administrator has determined that the material does not present a hazard which is associated with a Division 4.1 material.

(ii) *Generic types.* Division 4.1 self-reactive materials are assigned to a generic system consisting of seven types. A self-reactive substance identified by technical name in the Self-Reactive Materials Table in §173.224 is assigned to a generic type in accordance with that table. Self-reactive materials not identified in the Self-Reactive Materials Table in §173.224 are assigned to generic types under the procedures of paragraph (a)(2)(iii) of this section.

(A) *Type A.* Self-reactive material type A is a self-reactive material which, as packaged for transportation, can detonate or deflagrate rapidly. Transportation of type A self-reactive material is forbidden.

(B) *Type B.* Self-reactive material type B is a self-reactive material which, as packaged for transportation, neither detonates nor deflagrates rapidly, but is liable to undergo a thermal explosion in a package.

(C) *Type C.* Self-reactive material type C is a self-reactive material which, as packaged for transportation, neither detonates nor deflagrates rapidly and cannot undergo a thermal explosion.

(D) *Type D.* Self-reactive material type D is a self-reactive material which—

(*1*) Detonates partially, does not deflagrate rapidly and shows no violent effect when heated under confinement;

(*2*) Does not detonate at all, deflagrates slowly and shows no violent effect when heated under confinement; or

(*3*) Does not detonate or deflagrate at all and shows a medium effect when heated under confinement.

ED_001691B_00009240

(E) *Type E.* Self-reactive material type E is a self-reactive material which, in laboratory testing, neither detonates nor deflagrates at all and shows only a low or no effect when heated under confinement.

(F) *Type F.* Self-reactive material type F is a self-reactive material which, in laboratory testing, neither detonates in the cavitated state nor deflagrates at all and shows only a low or no effect when heated under confinement as well as low or no explosive power.

(G) *Type G.* Self-reactive material type G is a self-reactive material which, in laboratory testing, does not detonate in the cavitated state, will not deflagrate at all, shows no effect when heated under confinement, nor shows any explosive power. A type G self-reactive material is not subject to the requirements of this subchapter for self-reactive material of Division 4.1 provided that it is thermally stable (self-accelerating decomposition temperature is 50 °C (122 °F) or higher for a 50 kg (110 pounds) package). A self-reactive material meeting all characteristics of type G except thermal stability is classed as a type F self-reactive, temperature control material.

(iii) *Procedures for assigning a self-reactive material to a generic type.* A self-reactive material must be assigned to a generic type based on—

(A) Its physical state (i.e. liquid or solid), in accordance with the definition of liquid and solid in §171.8 of this subchapter;

(B) A determination as to its control temperature and emergency temperature, if any, under the provisions of §173.21(f);

(C) Performance of the self-reactive material under the test procedures specified in the UN Manual of Tests and Criteria (IBR, see §171.7 of this subchapter) and the provisions of paragraph (a)(2)(iii) of this section; and

(D) Except for a self-reactive material which is identified by technical name in the Self-Reactive Materials Table in §173.224(b) or a self-reactive material which may be shipped as a sample under the provisions of §173.224, the self-reactive material is approved in writing by the Associate Administrator. The person requesting approval shall submit to the Associate Administrator the tentative shipping description and generic type and—

(*1*) All relevant data concerning physical state, temperature controls, and tests results; or

(*2*) An approval issued for the self-reactive material by the competent authority of a foreign government.

(iv) *Tests.* The generic type for a self-reactive material must be determined using the testing protocol from Figure 20.1 (a)-(b) (Flow Chart Scheme for Self-Reactive Substances and Organic Peroxides) from the UN Manual of Tests and Criteria (IBR, see §171.7 of this subchapter).

(3) Readily combustible solids are materials that—

(i) Are solids which may cause a fire through friction, such as matches;

(ii) Show a burning rate faster than 2.2 mm (0.087 inches) per second when tested in accordance with the UN Manual of Tests and Criteria (IBR, see §171.7 of this subchapter); or

(iii) Any metal powders that can be ignited and react over the whole length of a sample in 10 minutes or less, when tested in accordance with the UN Manual of Tests and Criteria.

(b) *Division 4.2 (Spontaneously Combustible Material).* For the purposes of this subchapter, *spontaneously combustible material* (Division 4.2) means—

(1) *A pyrophoric material.* A pyrophoric material is a liquid or solid that, even in small quantities and without an external ignition source, can ignite within five (5) minutes after coming in contact with air when tested according to UN Manual of Tests and Criteria.

(2) *Self-heating material.* A self-heating material is a material that through a process where the gradual reaction of that substance with oxygen (in air) generates heat. If the rate of heat production exceeds the rate of heat loss, then the temperature of the substance will rise which, after an induction time, may lead to self-ignition and combustion. A material of this type which exhibits spontaneous ignition or if the temperature of the sample exceeds 200 °C (392 °F) during the 24-hour test period when tested in accordance with UN Manual of Tests and Criteria

ED_001691B_00009240

(IBR; *see* § 171.7 of this subchapter), is classed as a Division 4.2 material.

(c) *Division 4.3 (Dangerous when wet material).* For the purposes of this chapter, *dangerous when wet material* (Division 4.3) means a material that, by contact with water, is liable to become spontaneously flammable or to give off flammable or toxic gas at a rate greater than 1 L per kilogram of the material, per hour, when tested in accordance with UN Manual of Tests and Criteria.

[Amdt. 173–224, 55 FR 52634, Dec. 21, 1990]

EDITORIAL NOTE: For FEDERAL REGISTER citations affecting § 173.124, see the List of CFR Sections Affected, which appears in the Finding Aids section of the printed volume and at *www.fdsys.gov*.

§ 173.125 Class 4—Assignment of packing group.

(a) The packing group of a Class 4 material is assigned in column (5) of the § 172.101 Table. When the § 172.101 Table provides more than one packing group for a hazardous material, the packing group shall be determined on the basis of test results following test methods given in the UN Manual of Tests and Criteria (IBR, see § 171.7 of this subchapter) and by applying the appropriate criteria given in this section.

(b) Packing group criteria for readily combustible materials of Division 4.1 are as follows:

(1) Powdered, granular or pasty materials must be classified in Division 4.1 when the time of burning of one or more of the test runs, in accordance with the UN Manual of Tests and Criteria, is less than 45 seconds or the rate of burning is more than 2.2 mm/s. Powders of metals or metal alloys must be classified in Division 4.1 when they can be ignited and the reaction spreads over the whole length of the sample in 10 minutes or less.

(2) Packing group criteria for readily combustible materials of Division 4.1 are assigned as follows:

(i) For readily combustible solids (other than metal powders), Packing Group II if the burning time is less than 45 seconds and the flame passes the wetted zone. Packing Group II must be assigned to powders of metal or metal alloys if the zone of reaction spreads over the whole length of the sample in 5 minutes or less.

(ii) For readily combustible solids (other than metal powders), Packing Group III must be assigned if the burning rate time is less than 45 seconds and the wetted zone stops the flame propagation for at least 4 minutes. Packing Group III must be assigned to metal powders if the reaction spreads over the whole length of the sample in more than 5 minutes but not more than 10 minutes.

(c) Packing group criteria for Division 4.2 materials is as follows:

(1) Pyrophoric liquids and solids of Division 4.2 are assigned to Packing Group I.

(2) A self-heating material is assigned to—

(i) Packing Group II, if the material gives a positive test result when tested with a 25 mm cube size sample at 140 °C; or

(ii) Packing Group III, if—

(A) A positive test result is obtained in a test using a 100 mm sample cube at 140 °C and a negative test result is obtained in a test using a 25 mm sample cube at 140 °C and the substance is transported in packagings with a volume of more than 3 cubic meters; or

(B) A positive test result is obtained in a test using a 100 mm sample cube at 120 °C and a negative result is obtained in a test using a 25 mm sample cube at 140 °C and the substance is transported in packagings with a volume of more than 450 L; or

(C) A positive result is obtained in a test using a 100 mm sample cube at 100 °C and a negative result is obtained in a test using a 25 mm sample cube at 140 °C and the substance is transported in packagings with a volume of less than 450 L.

(d) A Division 4.3 dangerous when wet material is assigned to—

(1) Packing Group I, if the material reacts vigorously with water at ambient temperatures and demonstrates a tendency for the gas produced to ignite spontaneously, or which reacts readily with water at ambient temperatures such that the rate of evolution of flammable gases is equal or greater than 10 L per kilogram of material over any one minute;

ED_001691B_00009240

(2) Packing Group II, if the material reacts readily with water at ambient temperatures such that the maximum rate of evolution of flammable gases is equal to or greater than 20 L per kilogram of material per hour, and which does not meet the criteria for Packing Group I; or

(3) Packing Group III, if the material reacts slowly with water at ambient temperatures such that the maximum rate of evolution of flammable gases is greater than 1 L per kilogram of material per hour, and which does not meet the criteria for Packing Group I or II.

[Amdt. 173–224, 55 FR 52634 Dec. 21, 1990, as amended by Amdt. 173–255, 61 FR 50625, Sept. 26, 1996; Amdt. 173–261, 62 FR 24731, May 6, 1997; 62 FR 51560, Oct. 1, 1997; 66 FR 45380, Aug. 28, 2001; 68 FR 75744, Dec. 31, 2003]

§ 173.127 Class 5, Division 5.1—Definition and assignment of packing groups.

(a) *Definition.* For the purpose of this subchapter, *oxidizer* (Division 5.1) means a material that may, generally by yielding oxygen, cause or enhance the combustion of other materials.

(1) A solid material is classed as a Division 5.1 material if, when tested in accordance with the UN Manual of Tests and Criteria (IBR, see § 171.7 of this subchapter):

(i) If test O.1 is used (UN Manual of Tests and Criteria, sub-section 34.4.1), the mean burning time is less than or equal to the burning time of a 3:7 potassium bromate/cellulose mixture; or

(ii) If test O.3 is used (UN Manual of Tests and Criteria, sub-section 34.4.3), the mean burning rate is greater than or equal to the burning rate of a 1:2 calcium peroxide/cellulose mixture.

(2) A liquid material is classed as a Division 5.1 material if, when tested in accordance with the UN Manual of Tests and Criteria, it spontaneously ignites or its mean time for a pressure rise from 690 kPa to 2070 kPa gauge is less then the time of a 1:1 nitric acid (65 percent)/cellulose mixture.

(b) *Assignment of packing groups.* (1) The packing group of a Division 5.1 material which is a solid shall be assigned using the following criteria:

(i) Packing Group I, for any material which, in either concentration tested:

(A) If test O.1 is used (UN Manual of Tests and Criteria, sub-section 34.4.1), the mean burning time is less than the mean burning time of a 3:2 potassium bromate/cellulose mixture; or

(B) If test O.3 is used (UN Manual of Tests and Criteria, sub-section 34.4.3), the mean burning rate is greater than the mean burning rate of a 3:1 calcium peroxide/cellulose mixture.

(ii) Packing Group II, for any material which, in either concentration tested:

(A) If test O.1 is used (UN Manual of Tests and Criteria, sub-section 34.4.1), the mean burning time is less than the mean burning time of a 2:3 potassium bromate/cellulose mixture and the criteria for Packing Group I are not met; or

(B) If test O.3 is used (UN Manual of Tests and Criteria, sub-section 34.4.3), the mean burning rate is greater than the mean burning rate of a 1:1 calcium peroxide/cellulose mixture and the criteria for Packing Group I are not met.

(iii) Packing Group III for any material which, in either concentration tested:

(A) If test O.1 is used (UN Manual of Tests and Criteria, sub-section 34.4.1), the mean burning time is less than the mean burning time of a 3:7 potassium bromate/cellulose mixture and the criteria for Packing Groups I and II are not met; or

(B) If test O.3 is used (UN Manual of Tests and Criteria, sub-section 34.4.3), the mean burning rate is greater than the mean burning rate of a 1:2 calcium peroxide/cellulose mixture and the criteria for Packing Groups I and II are not met.

(iv) The materials is not classified as a Division 5.1 material if, in either concentration tested:

(A) If test O.1 is used (UN Manual of Tests and Criteria, sub-section 34.4.1), the sample tested does not ignite and exhibit burn, or exhibits a mean burning time of greater than or equal to the mean burning time of a 3:7 potassium bromate/cellulose mixture.

(B) If test O.3 is used (UN Manual of Tests and Criteria, sub-section 34.4.3), the sample tested does not ignite and exhibit burn, or exhibits a mean burning rate less than or equal to the mean

ED_001691B_00009240

burning rate of a 1:2 calcium peroxide/cellulose mixture.

(2) [Reserved]

[Amdt. 173-261, 62 FR 24732, May 6, 1997, as amended at 68 FR 75744, Dec. 31, 2003; 80 FR 1156, Jan. 8, 2015]

§ 173.128 Class 5, Division 5.2—Definitions and types.

(a) *Definitions.* For the purposes of this subchapter, *organic peroxide (Division 5.2)* means any organic compound containing oxygen (O) in the bivalent -O-O- structure and which may be considered a derivative of hydrogen peroxide, where one or more of the hydrogen atoms have been replaced by organic radicals, unless any of the following paragraphs applies:

(1) The material meets the definition of an explosive as prescribed in subpart C of this part, in which case it must be classed as an explosive;

(2) The material is forbidden from being offered for transportation according to § 172.101 of this subchapter or § 173.21;

(3) The Associate Administrator has determined that the material does not present a hazard which is associated with a Division 5.2 material; or

(4) The material meets one of the following conditions:

(i) For materials containing no more than 1.0 percent hydrogen peroxide, the available oxygen, as calculated using the equation in paragraph (a)(4)(ii) of this section, is not more than 1.0 percent, or

(ii) For materials containing more than 1.0 percent but not more than 7.0 percent hydrogen peroxide, the available oxygen, content (O_a) is not more than 0.5 percent, when determined using the equation:

$$O_a = 16 \times \sum_{i=1}^{k} \frac{n_i c_i}{m_i}$$

where, for a material containing k species of organic peroxides:

n_i = number of -O-O- groups per molecule of the *i* th species

c_i = concentration (mass percent) of the *i* th species

m_i = molecular mass of the *i* th species

(b) *Generic types.* Division 5.2 organic peroxides are assigned to a generic system which consists of seven types. An organic peroxide identified by technical name in the Organic Peroxides Table in § 173.225 is assigned to a generic type in accordance with that table. Organic peroxides not identified in the Organic Peroxides table are assigned to generic types under the procedures of paragraph (c) of this section.

(1) *Type A.* Organic peroxide type A is an organic peroxide which can detonate or deflagrate rapidly as packaged for transport. Transportation of type A organic peroxides is forbidden.

(2) *Type B.* Organic peroxide type B is an organic peroxide which, as packaged for transport, neither detonates nor deflagrates rapidly, but can undergo a thermal explosion.

(3) *Type C.* Organic peroxide type C is an organic peroxide which, as packaged for transport, neither detonates nor deflagrates rapidly and cannot undergo a thermal explosion.

(4) *Type D.* Organic peroxide type D is an organic peroxide which—

(i) Detonates only partially, but does not deflagrate rapidly and is not affected by heat when confined;

(ii) Does not detonate, deflagrates slowly, and shows no violent effect if heated when confined; or

(iii) Does not detonate or deflagrate, and shows a medium effect when heated under confinement.

(5) *Type E.* Organic peroxide type E is an organic peroxide which neither detonates nor deflagrates and shows low, or no, effect when heated under confinement.

(6) *Type F.* Organic peroxide type F is an organic peroxide which will not detonate in a cavitated state, does not deflagrate, shows only a low, or no, effect if heated when confined, and has low, or no, explosive power.

(7) *Type G.* Organic peroxide type G is an organic peroxide which will not detonate in a cavitated state, will not deflagrate at all, shows no effect when heated under confinement, and shows no explosive power. A type G organic peroxide is not subject to the requirements of this subchapter for organic peroxides of Division 5.2 provided that it is thermally stable (self-accelerating decomposition temperature is 50 °C (122 °F) or higher for a 50 kg (110 pounds) package). An organic peroxide meeting all characteristics of type G except

ED_001691B_00009240

thermal stability and requiring temperature control is classed as a type F, temperature control organic peroxide.

(c) *Procedure for assigning an organic peroxide to a generic type.* An organic peroxide shall be assigned to a generic type based on—

(1) Its physical state (i.e., liquid or solid), in accordance with the definitions for liquid and solid in § 171.8 of this subchapter;

(2) A determination as to its control temperature and emergency temperature, if any, under the provisions of § 173.21(f); and

(3) Performance of the organic peroxide under the test procedures specified in the UN Manual of Tests and Criteria (IBR, see § 171.7 of this subchapter), and the provisions of paragraph (d) of this section.

(d) *Approvals.* (1) An organic peroxide must be approved, in writing, by the Associate Administrator, before being offered for transportation or transported, including assignment of a generic type and shipping description, except for—

(i) An organic peroxide which is identified by technical name in the Organic Peroxides Table in § 173.225(c);

(ii) A mixture of organic peroxides prepared according to § 173.225(b); or

(iii) An organic peroxide which may be shipped as a sample under the provisions of § 173.225(b).

(2) A person applying for an approval must submit all relevant data concerning physical state, temperature controls, and tests results or an approval issued for the organic peroxide by the competent authority of a foreign government.

(e) *Tests.* The generic type for an organic peroxide shall be determined using the testing protocol from Figure 20.1(a) (Classification and Flow Chart Scheme for Organic Peroxides) from the UN Manual of Tests and Criteria (IBR, see § 171.7 of this subchapter).

[Amdt. 173–224, 55 FR 52634, Dec. 21, 1990, as amended at 56 FR 66268, Dec. 20, 1991; Amdt. 173–234, 58 FR 51532, Oct. 1, 1993; Amdt. 173–241, 59 FR 67508, Dec. 29, 1994; Amdt. 173–261, 62 FR 24732, May 6, 1997; 65 FR 58629, Sept. 29, 2000; 66 FR 8647, Feb. 1, 2001; 66 FR 45379, Aug. 28, 2001; 68 FR 75744, Dec. 31, 2003; 69 FR 76155, Dec. 20, 2004]

§ 173.129 Class 5, Division 5.2—Assignment of packing group.

All Division 5.2 materials are assigned to Packing Group II in column 5 of the § 172.101 table.

§ 173.132 Class 6, Division 6.1—Definitions.

(a) For the purpose of this subchapter, *poisonous material* (Division 6.1) means a material, other than a gas, which is known to be so toxic to humans as to afford a hazard to health during transportation, or which, in the absence of adequate data on human toxicity:

(1) Is presumed to be toxic to humans because it falls within any one of the following categories when tested on laboratory animals (whenever possible, animal test data that has been reported in the chemical literature should be used):

(i) *Oral Toxicity.* A liquid or solid with an LD_{50} for acute oral toxicity of not more than 300 mg/kg.

(ii) *Dermal Toxicity.* A material with an LD_{50} for acute dermal toxicity of not more than 1000 mg/kg.

(iii) *Inhalation Toxicity.* (A) A dust or mist with an LC_{50} for acute toxicity on inhalation of not more than 4 mg/L; or

(B) A material with a saturated vapor concentration in air at 20 °C (68 °F) greater than or equal to one-fifth of the LC_{50} for acute toxicity on inhalation of vapors and with an LC_{50} for acute toxicity on inhalation of vapors of not more than 5000 mL/m^3; or

(2) Is an irritating material, with properties similar to tear gas, which causes extreme irritation, especially in confined spaces.

(b) For the purposes of this subchapter—

(1) LD_{50} (median lethal dose) for acute oral toxicity is the statistically derived single dose of a substance that can be expected to cause death within 14 days in 50% of young adult albino rats when administered by the oral route. The LD_{50} value is expressed in terms of mass of test substance per mass of test animal (mg/kg).

(2) LD_{50} for acute dermal toxicity means that dose of the material which, administered by continuous contact for 24 hours with the shaved intact skin (avoiding abrading) of an albino rabbit,

ED_001691B_00009240

causes death within 14 days in half of the animals tested. The number of animals tested must be sufficient to give statistically valid results and be in conformity with good pharmacological practices. The result is expressed in mg/kg body mass.

(3) LC_{50} for acute toxicity on inhalation means that concentration of vapor, mist, or dust which, administered by continuous inhalation for one hour to both male and female young adult albino rats, causes death within 14 days in half of the animals tested. If the material is administered to the animals as a dust or mist, more than 90 percent of the particles available for inhalation in the test must have a diameter of 10 microns or less if it is reasonably foreseeable that such concentrations could be encountered by a human during transport. The result is expressed in mg/L of air for dusts and mists or in mL/m^3 of air (parts per million) for vapors. See § 173.133(b) for LC_{50} determination for mixtures and for limit tests.

(i) When provisions of this subchapter require the use of the LC_{50} for acute toxicity on inhalation of dusts and mists based on a one-hour exposure and such data is not available, the LC_{50} for acute toxicity on inhalation based on a four-hour exposure may be multiplied by four and the product substituted for the one-hour LC_{50} for acute toxicity on inhalation.

(ii) When the provisions of this subchapter require the use of the LC_{50} for acute toxicity on inhalation of vapors based on a one-hour exposure and such data is not available, the LC_{50} for acute toxicity on inhalation based on a four-hour exposure may be multiplied by two and the product substituted for the one-hour LC_{50} for acute toxicity on inhalation.

(iii) A solid substance should be tested if at least 10 percent of its total mass is likely to be dust in a respirable range, e.g. the aerodynamic diameter of that particle-fraction is 10 microns or less. A liquid substance should be tested if a mist is likely to be generated in a leakage of the transport containment. In carrying out the test both for solid and liquid substances, more than 90% (by mass) of a specimen prepared for inhalation toxicity testing must be in the respirable range as defined in this paragraph (b)(3)(iii).

(c) For purposes of classifying and assigning packing groups to mixtures possessing oral or dermal toxicity hazards according to the criteria in § 173.133(a)(1), it is necessary to determine the acute LD_{50} of the mixture. If a mixture contains more than one active constituent, one of the following methods may be used to determine the oral or dermal LD_{50} of the mixture:

(1) Obtain reliable acute oral and dermal toxicity data on the actual mixture to be transported;

(2) If reliable, accurate data is not available, classify the formulation according to the most hazardous constituent of the mixture as if that constituent were present in the same concentration as the total concentration of all active constituents; or

(3) If reliable, accurate data is not available, apply the formula:

$$\frac{C_{A+}}{T_A} + \frac{C_B}{T_B} + \frac{C_Z}{T_Z} = \frac{100}{T_M}$$

where:

C = the % concentration of constituent A, B ... Z in the mixture;

T = the oral LD_{50} values of constituent A, B ... Z;

T_M = the oral LD_{50} value of the mixture.

NOTE TO FORMULA IN PARAGRAPH (c)(3): This formula also may be used for dermal toxicities provided that this information is available on the same species for all constituents. The use of this formula does not take into account any potentiation or protective phenomena.

(d) The foregoing categories shall not apply if the Associate Administrator has determined that the physical characteristics of the material or its probable hazards to humans as shown by documented experience indicate that the material will not cause serious sickness or death.

[Amdt. 173–224, 55 FR 52634, Dec. 21, 1990, as amended at 56 FR 66268, Dec. 20, 1991; Amdt. 173–234, 58 FR 51532, Oct. 1, 1993; Amdt. 173–261, 62 FR 24732, May 6, 1997; 62 FR 45702, Aug. 28, 1997; 65 FR 58629, Sept. 29, 2000; 66 FR 45379, 45382, Aug. 28, 2001; 69 FR 76155, Dec. 20, 2004; 72 FR 55692, Oct. 1, 2007; 76 FR 43529, July 20, 2011]

ED_001691B_00009240

§ 173.133 Assignment of packing group and hazard zones for Division 6.1 materials.

(a) The packing group of Division 6.1 materials shall be as assigned in column 5 of the § 172.101 table. When the § 172.101 table provides more than one packing group or hazard zone for a hazardous material, the packing group and hazard zone shall be determined by applying the following criteria:

(1) The packing group assignment for routes of administration other than inhalation of vapors shall be in accordance with the following table:

Packing group	Oral toxicity LD_{50} (mg/kg)	Dermal toxicity LD_{50} (mg/kg)	Inhalation toxicity by dusts and mists LC_{50} (mg/L)
I	≤5.0	≤50	≤0.2
II	>5.0 and ≤50	>50 and ≤200	>0.2 and ≤2.0
III	>50 and ≤300	>200 and ≤1000	>2.0 and ≤4.0

(2)(i) The packing group and hazard zone assignments for liquids (see § 173.115(c) of this subpart for gases) based on inhalation of vapors shall be in accordance with the following table:

Packing Group	Vapor concentration and toxicity
I (Hazard Zone A)	V ≥500 LC_{50} and LC_{50} ≤200 mL/M³.
I (Hazard Zone B)	V ≥10 LC_{50}; LC_{50} ≤1000 mL/m³; and the criteria for Packing Group I, Hazard Zone A are not met.
II	V ≥LC_{50}; LC_{50} ≤3000 mL/m³; and the criteria for Packing Group I, are not met.
III	V ≥.2 LC_{50}; LC_{50} ≤5000 mL/m³; and the criteria for Packing Groups I and II, are not met.

NOTE 1: V is the saturated vapor concentration in air of the material in mL/m³ at 20 °C and standard atmospheric pressure.

NOTE 2: A liquid in Division 6.1 meeting criteria for Packing Group I, Hazard Zones A or B stated in paragraph (a)(2) of this section is a material poisonous by inhalation subject to the additional hazard communication requirements in §§ 172.203(m), 172.313 and table 1 of § 172.504(e) of this subchapter.

(ii) These criteria are represented graphically in Figure 1:

ED_001691B_00009240

Figure 1
Inhalation Toxicity: Packing Group and Hazard Zone Borderlines

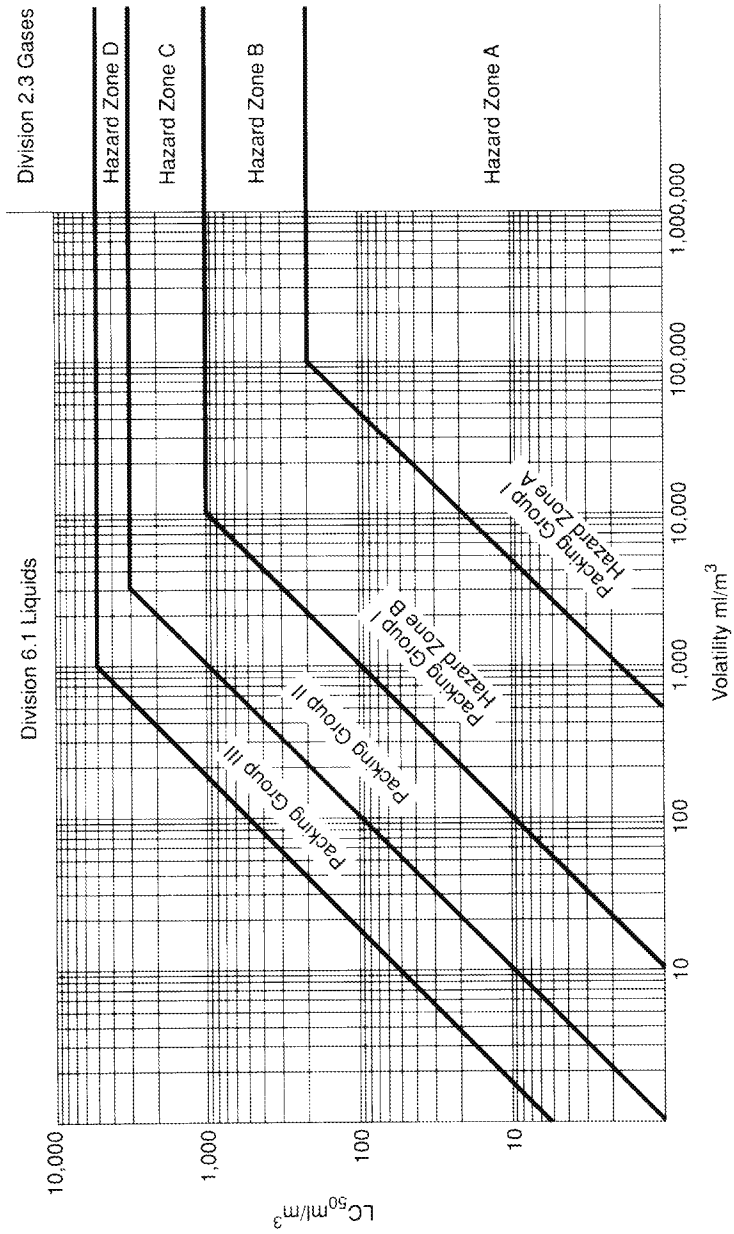

(3) When the packing group determined by applying these criteria is different for two or more (oral, dermal or inhalation) routes of administration, the packing group assigned to the material shall be that indicated for the highest degree of toxicity for any of the routes of administration.

ED_001691B_00009240

(4) Notwithstanding the provisions of this paragraph, the packing group and hazard zone of a tear gas substance is as assigned in column 5 of the § 172.101 table.

(b) The packing group and hazard zone for Division 6.1 mixtures that are poisonous (toxic) by inhalation may be determined by one of the following methods:

(1) Where LC_{50} data is available on each of the poisonous (toxic) substances comprising the mixture—

(i) The LC_{50} of the mixture is estimated using the formula:

$$LC_{50}(\text{mixture}) = \frac{1}{\sum_{i=1}^{n} \frac{f_i}{LC_{50i}}}$$

where

f_i = mole fraction of the ith component substance of the liquid.

LC_{50i} = mean lethal concentration of the ith component substance in mL/m³

(ii) The volatility of each component substance is estimated using the formula:

$$V_i = P_i \times \frac{10^6}{101.3}\ \text{mL/m}^3$$

where:

P_i = partial pressure of the *ith* component substance in kPa at 20 °C and one atmospheric pressure. Pi may be calculated according to Raoult's Law using appropriate activity coefficients. Where activity coefficients are not available, the coefficient may be assumed to be 1.0.

(iii) The ratio of the volatility to the LC_{50} is calculated using the formula:

$$R = \sum_{i=1}^{n} \frac{V_i}{LC_{50i}}$$

(iv) Using the calculated values LC_{50} (mixture) and R, the packing group for the mixture is determined as follows:

Packaging group (hazard zone)	Ratio of volatility and LC_{50}
I (Hazard Zone A) ..	R ≥500 and LC_{50} (mixture) ≤200 mL/m³.
I (Hazard Zone B) ..	R ≥10 and LC_{50} (mixture) ≤1000 mL/m³; and the criteria for Packing Group I, Hazard Zone A are not met.
II	R ≥1 and LC_{50} (mixture) ≤3000 mL/m³; and the criteria for Packing Group I, Hazard Zones A and B are not met.
III	R ≥⅕ and LC_{50} (mixture) ≤5000 mL/m³; and the criteria for Packing Group I, Hazard Zones A and B and Packing Group II are not met.

(2) In the absence of LC_{50} data on the poisonous (toxic) constituent substances, the mixture may be assigned a packing group and hazard zone based on the following simplified threshold toxicity tests. When these threshold tests are used, the most restrictive packing group and hazard zone must be determined and used for the transportation of the mixture.

(i) A mixture is assigned to Packing Group I, Hazard Zone A only if both the following criteria are met:

(A) A sample of the liquid mixture is vaporized and diluted with air to create a test atmosphere of 200 mL/m³ vaporized mixture in air. Ten albino rats (five male and five female) are exposed to the test atmosphere as determined by an analytical method appropriate for the material being classified for one hour and observed for fourteen days. If five or more of the animals die within the fourteen-day observation period, the mixture is presumed to have an LC_{50} equal to or less than 200 mL/m³.

(B) A sample of the vapor in equilibrium with the liquid mixture is diluted with 499 equal volumes of air to form a test atmosphere. Ten albino rats (five male and five female) are exposed to the test atmosphere for one hour and observed for fourteen days. If five or more of the animals die within the fourteen-day observation period, the mixture is presumed to have a volatility equal to or greater than 500 times the mixture LC_{50}.

(ii) A mixture is assigned to Packing Group I, Hazard Zone B only if both the following criteria are met, and the mixture does not meet the criteria for Packing Group I, Hazard Zone A:

(A) A sample of the liquid mixture is vaporized and diluted with air to create a test atmosphere of 1000 mL/m³ vaporized mixture in air. Ten albino rats (five male and five female) are exposed to the test atmosphere for one hour and observed for fourteen days. If five or more of the animals die within the fourteen-day observation period, the

ED_001691B_00009240

mixture is presumed to have an LC_{50} equal to or less than 1000 mL/m³.

(B) A sample of the vapor in equilibrium with the liquid mixture is diluted with 9 equal volumes of air to form a test atmosphere. Ten albino rats (five male and five female) are exposed to the test atmosphere for one hour and observed for fourteen days. If five or more of the animals die within the fourteen-day observation period, the mixture is presumed to have a volatility equal to or greater than 10 times the mixture LC_{50}.

(iii) A mixture is assigned to Packing Group II only if both the following criteria are met, and the mixture does not meet the criteria for Packing Group I (Hazard Zones A or B):

(A) A sample of the liquid mixture is vaporized and diluted with air to create a test atmosphere of 3000 mL/m³ vaporized mixture in air. Ten albino rats (five male and five female) are exposed to the test atmosphere for one hour and observed for fourteen days. If five or more of the animals die within the fourteen-day observation period, the mixture is presumed to have an LC_{50} equal to or less than 3000 mL/m³.

(B) A sample of the vapor in equilibrium with the liquid mixture is used to form a test atmosphere. Ten albino rats (five male and five female) are exposed to the test atmosphere for one hour and observed for fourteen days. If five or more of the animals die within the fourteen-day observation period, the mixture is presumed to have a volatility equal to or greater than the mixture LC_{50}.

(iv) A mixture is assigned to Packing Group III only if both the following criteria are met, and the mixture does not meet the criteria for Packing Groups I (Hazard Zones A or B) or Packing Group II (Hazard Zone C):

(A) A sample of the liquid mixture is vaporized and diluted with air to create a test atmosphere of 5000 mL/m³ vaporized mixture in air. Ten albino rats (five male and five female) are exposed to the test atmosphere for one hour and observed for fourteen days. If five or more of the animals die within the fourteen-day observation period, the mixture is presumed to have an LC_{50} equal to or less than 5000 mL/m³.

(B) The vapor pressure of the liquid mixture is measured and if the vapor concentration is equal to or greater than 1000 mL/m³, the mixture is presumed to have a volatility equal to or greater than ⅕ the mixture LC_{50}.

(c) *Transitional provisions.* The criteria for packing group assignments in effect on December 31, 2006, may continue to be used until January 1, 2012.

[Amdt. 173–224, 55 FR 52634, Dec. 21, 1990, as amended at 56 FR 66268, Dec. 20, 1991; 57 FR 45461, Oct. 1, 1992; Amdt. 173–234, 58 FR 51532, Oct. 1, 1993; Amdt. 173–138, 59 FR 49133, Sept. 26, 1994; Amdt. 173–255, 61 FR 50626, Sept. 26, 1996; 66 FR 45183, 45380, Aug. 28, 2001; 66 FR 49556, Sept. 28, 2001; 69 FR 54046, Sept. 7, 2004; 71 FR 54395, Sept. 14, 2006; 71 FR 78631, Dec. 29, 2006; 74 FR 53188, Oct. 16, 2009; 76 FR 43529, July 20, 2011]

§ 173.134 Class 6, Division 6.2—Definitions and exceptions.

(a) *Definitions and classification criteria.* For the purposes of this subchapter, the following definitions and classification criteria apply to Division 6.2 materials.

(1) *Division 6.2 (Infectious substance)* means a material known or reasonably expected to contain a pathogen. A pathogen is a microorganism (including bacteria, viruses, rickettsiae, parasites, fungi) or other agent, such as a proteinaceous infectious particle (prion), that can cause disease in humans or animals. An infectious substance must be assigned the identification number UN 2814, UN 2900, UN 3373, or UN 3291 as appropriate, and must be assigned to one of the following categories:

(i) *Category A:* An infectious substance in a form capable of causing permanent disability or life-threatening or fatal disease in otherwise healthy humans or animals when exposure to it occurs. An exposure occurs when an infectious substance is released outside of its protective packaging, resulting in physical contact with humans or animals. A Category A infectious substance must be assigned to identification number UN 2814 or UN 2900, as appropriate. Assignment to UN 2814 or UN 2900 must be based on the known medical history or symptoms of the source patient or animal, endemic

ED_001691B_00009240

local conditions, or professional judgment concerning the individual circumstances of the source human or animal.

(ii) *Category B:* An infectious substance that is not in a form generally capable of causing permanent disability or life-threatening or fatal disease in otherwise healthy humans or animals when exposure to it occurs. This includes Category B infectious substances transported for diagnostic or investigational purposes. A Category B infectious substance must be described as ''Biological substance, Category B'' and assigned identification number UN 3373. This does not include regulated medical waste, which must be assigned identification number UN 3291.

(2) *Biological product* means a virus, therapeutic serum, toxin, antitoxin, vaccine, blood, blood component or derivative, allergenic product, or analogous product, or arsphenamine or derivative of arsphenamine (or any other trivalent arsenic compound) applicable to the prevention, treatment, or cure of a disease or condition of human beings or animals. A *biological product* includes a material subject to regulation under 42 U.S.C. 262 or 21 U.S.C. 151–159. Unless otherwise excepted, a *biological product* known or reasonably expected to contain a pathogen that meets the definition of a Category A or B infectious substance must be assigned the identification number UN 2814, UN 2900, or UN 3373, as appropriate.

(3) *Culture* means an infectious substance containing a pathogen that is intentionally propagated. *Culture* does not include a human or animal patient specimen as defined in paragraph (a)(4) of this section.

(4) *Patient specimen* means human or animal material collected directly from humans or animals and transported for research, diagnosis, investigational activities, or disease treatment or prevention. *Patient specimen* includes excreta, secreta, blood and its components, tissue and tissue swabs, body parts, and specimens in transport media (*e.g.*, transwabs, culture media, and blood culture bottles).

(5) *Regulated medical waste or clinical waste or (bio) medical waste* means a waste or reusable material derived from the medical treatment of an animal or human, which includes diagnosis and immunization, or from biomedical research, which includes the production and testing of biological products. Regulated medical waste or clinical waste or (bio) medical waste containing a Category A infectious substance must be classed as an infectious substance, and assigned to UN2814 or UN2900, as appropriate.

(6) *Sharps* means any object contaminated with a pathogen or that may become contaminated with a pathogen through handling or during transportation and also capable of cutting or penetrating skin or a packaging material. *Sharps* includes needles, syringes, scalpels, broken glass, culture slides, culture dishes, broken capillary tubes, broken rigid plastic, and exposed ends of dental wires.

(7) *Toxin* means a Division 6.1 material from a plant, animal, or bacterial source. A *toxin* containing an infectious substance or a *toxin* contained in an infectious substance must be classed as Division 6.2, described as an infectious substance, and assigned to UN 2814 or UN 2900, as appropriate.

(8) *Used health care product* means a medical, diagnostic, or research device or piece of equipment, or a personal care product used by consumers, medical professionals, or pharmaceutical providers that does not meet the definition of a patient specimen, biological product, or regulated medical waste, is contaminated with potentially infectious body fluids or materials, and is not decontaminated or disinfected to remove or mitigate the infectious hazard prior to transportation.

(b) *Exceptions.* The following are not subject to the requirements of this subchapter as Division 6.2 materials:

(1) A material that does not contain an infectious substance or that is unlikely to cause disease in humans or animals.

(2) Non-infectious biological materials from humans, animals, or plants. Examples include non-infectious cells, tissue cultures, blood or plasma from individuals not suspected of having an infectious disease, DNA, RNA or other non-infectious genetic elements.

ED_001691B_00009240

(3) A material containing micro-organisms that are non-pathogenic to humans or animals.

(4) A material containing pathogens that have been neutralized or inactivated such that they no longer pose a health risk.

(5) A material with a low probability of containing an infectious substance, or where the concentration of the infectious substance is at a level naturally occurring in the environment so it cannot cause disease when exposure to it occurs. Examples of these materials include: Foodstuffs; environmental samples, such as water or a sample of dust or mold; and substances that have been treated so that the pathogens have been neutralized or deactivated, such as a material treated by steam sterilization, chemical disinfection, or other appropriate method, so it no longer meets the definition of an infectious substance.

(6) A biological product, including an experimental or investigational product or component of a product, subject to Federal approval, permit, review, or licensing requirements, such as those required by the Food and Drug Administration of the U.S. Department of Health and Human Services or the U.S. Department of Agriculture.

(7) Blood collected for the purpose of blood transfusion or the preparation of blood products; blood products; plasma; plasma derivatives; blood components; tissues or organs intended for use in transplant operations; and human cell, tissues, and cellular and tissue-based products regulated under authority of the Public Health Service Act (42 U.S.C. 264–272) and/or the Food, Drug, and Cosmetic Act (21 U.S.C. 332 *et seq.*).

(8) Blood, blood plasma, and blood components collected for the purpose of blood transfusion or the preparation of blood products and sent for testing as part of the collection process, except where the person collecting the blood has reason to believe it contains an infectious substance, in which case the test sample must be shipped as a Category A or Category B infectious substance in accordance with § 173.196 or § 173.199, as appropriate.

(9) Dried blood spots or specimens for fecal occult blood detection placed on absorbent filter paper or other material.

(10) A Division 6.2 material, other than a Category A infectious substance, contained in a patient sample being transported for research, diagnosis, investigational activities, or disease treatment or prevention, or a biological product, when such materials are transported by a private or contract carrier in a motor vehicle used exclusively to transport such materials. Medical or clinical equipment and laboratory products may be transported aboard the same vehicle provided they are properly packaged and secured against exposure or contamination. If the human or animal sample or biological product meets the definition of regulated medical waste in paragraph (a)(5) of this section, it must be offered for transportation and transported in conformance with the appropriate requirements for regulated medical waste.

(11) A human or animal sample (including, but not limited to, secreta, excreta, blood and its components, tissue and tissue fluids, and body parts) being transported for routine testing not related to the diagnosis of an infectious disease, such as for drug/alcohol testing, cholesterol testing, blood glucose level testing, prostate specific antibody testing, testing to monitor kidney or liver function, or pregnancy testing, or for tests for diagnosis of non-infectious diseases, such as cancer biopsies, and for which there is a low probability the sample is infectious.

(12) Laundry and medical equipment and used health care products, as follows:

(i) Laundry or medical equipment conforming to the regulations of the Occupational Safety and Health Administration of the Department of Labor in 29 CFR 1910.1030. This exception includes medical equipment intended for use, cleaning, or refurbishment, such as reusable surgical equipment, or equipment used for testing where the components within which the equipment is contained essentially function as packaging. This exception does not apply to medical equipment being transported for disposal.

(ii) Used health care products not conforming to the requirements in 29

ED_001691B_00009240

CFR 1910.1030 and being returned to the manufacturer or the manufacturer's designee are excepted from the requirements of this subchapter when offered for transportation or transported in accordance with this paragraph (b)(12). For purposes of this paragraph, a health care product is used when it has been removed from its original packaging. Used health care products contaminated with or suspected of contamination with a Category A infectious substance may not be transported under the provisions of this paragraph.

(A) Each used health care product must be drained of free liquid to the extent practicable and placed in a watertight primary container designed and constructed to assure that it remains intact under conditions normally incident to transportation. For a used health care product capable of cutting or penetrating skin or packaging material, the primary container must be capable of retaining the product without puncture of the packaging under normal conditions of transport. Each primary container must be marked with a BIOHAZARD marking conforming to 29 CFR 1910.1030(g)(1)(i).

(B) Each primary container must be placed inside a watertight secondary container designed and constructed to assure that it remains intact under conditions normally incident to transportation. The secondary container must be marked with a BIOHAZARD marking conforming to 29 CFR 1910.1030(g)(1)(i).

(C) The secondary container must be placed inside an outer packaging with sufficient cushioning material to prevent movement between the secondary container and the outer packaging. An itemized list of the contents of the primary container and information concerning possible contamination with a Division 6.2 material, including its possible location on the product, must be placed between the secondary container and the outside packaging.

(D) Each person who offers or transports a used health care product under the provisions of this paragraph must know about the requirements of this paragraph.

(13) Any waste or recyclable material, other than regulated medical waste, including—

(i) Household waste as defined in § 171.8, when transported in accordance with applicable state, local, or tribal requirements.

(ii) Sanitary waste or sewage;

(iii) Sewage sludge or compost;

(iv) Animal waste generated in animal husbandry or food production; or

(v) Medical waste generated from households and transported in accordance with applicable state, local, or tribal requirements.

(14) Corpses, remains, and anatomical parts intended for interment, cremation, or medical research at a college, hospital, or laboratory.

(15) Forensic material transported on behalf of a U.S. Government, state, local or Indian tribal government agency, except that—

(i) Forensic material known or suspected to contain a Category B infectious substance must be shipped in a packaging conforming to the provisions of § 173.24.

(ii) Forensic material known or suspected to contain a Category A infectious substance or an infectious substance listed as a select agent in 42 CFR part 73 must be transported in packaging capable of meeting the test standards in § 178.609 of this subchapter. The secondary packaging must be marked with a BIOHAZARD symbol conforming to specifications in 29 CFR 1910.1030(g)(1)(i). An itemized list of contents must be enclosed between the secondary packaging and the outer packaging.

(16) Agricultural products and food as defined in the Federal Food, Drug, and Cosmetics Act (21 U.S.C. 332 *et seq.*).

(c) *Exceptions for regulated medical waste.* The following provisions apply to the transportation of regulated medical waste:

(1) A regulated medical waste transported by a private or contract carrier is excepted from—

(i) The requirement for an "INFECTIOUS SUBSTANCE" label if the outer packaging is marked with a "BIOHAZARD" marking in accordance with 29 CFR 1910.1030; and

(ii) The specific packaging requirements of § 173.197, if packaged in a rigid non-bulk packaging conforming to the general packaging requirements of

ED_001691B_00009240

§§ 173.24 and 173.24a and packaging requirements specified in 29 CFR 1910.1030, provided the material does not include a waste concentrated stock culture of an infectious substance. Sharps containers must be securely closed to prevent leaks or punctures.

(2) The following materials may be offered for transportation and transported as a regulated medical waste when packaged in a rigid non-bulk packaging conforming to the general packaging requirements of §§ 173.24 and 173.24a and packaging requirements specified in 29 CFR 1910.1030 and transported by a private or contract carrier in a vehicle used exclusively to transport regulated medical waste:

(i) Waste stock or culture of a Category B infectious substance;

(ii) Plant and animal waste regulated by the Animal and Plant Health Inspection Service (APHIS);

(iii) Waste pharmaceutical materials;

(iv) Laboratory and recyclable wastes;

(v) Infectious substances that have been treated to eliminate or neutralize pathogens;

(vi) Forensic materials being transported for final destruction;

(vii) Rejected or recalled health care products;

(viii) Documents intended for destruction in accordance with the Health Insurance Portability and Accountability Act of 1996 (HIPAA) requirements;

(ix) Medical or clinical equipment and laboratory products provided they are properly packaged and secured against exposure or contamination; or

(x) Sharps in sharp containers provided the containers are securely closed to prevent leaks or punctures; do not exceed 18 gallons capacity; registered under the Medical Device Regulations of FDA; made of puncture resistant plastic that meets ASTM Standard F2132–01, Standard Specification for Puncture Resistance of Materials Used in Containers for Discarded Medical Needles and Other Sharps; and are securely fitted into wheeled racks that hold them in an upright position. The wheeled racks must contain full rows of sharps containers secured in place by a moveable bar; and must be securely held in place on the motor vehicle by straps or load bars during transportation. No shelf in any wheeled rack may exceed the manufacturer's recommended load capacity.

(d) If an item listed in paragraph (b) or (c) of this section meets the definition of another hazard class or if it is a hazardous substance, hazardous waste, or marine pollutant, it must be offered for transportation and transported in accordance with applicable requirements of this subchapter.

(e) *Transitional provisions.* The authorization for continued use of the criteria for packing group assignments in effect on December 31, 2006 ended on January 1, 2012.

[67 FR 53138, Aug. 14, 2002, as amended at 68 FR 57632, Oct. 6, 2003; 70 FR 56098, Sept. 23, 2005; 71 FR 32258, June 2, 2006; 71 FR 78631, Dec. 29, 2006; 72 FR 55692, Oct. 1, 2007; 73 FR 4718, Jan. 28, 2008; 74 FR 2257, Jan. 14, 2009; 76 FR 43530, July 20, 2011; 77 FR 60942, Oct. 5, 2012; 78 FR 15327, Mar. 11, 2013]

§ 173.136 Class 8—Definitions.

(a) For the purpose of this subchapter, "corrosive material" (Class 8) means a liquid or solid that causes full thickness destruction of human skin at the site of contact within a specified period of time. A liquid, or a solid which may become liquid during transportation, that has a severe corrosion rate on steel or aluminum based on the criteria in § 173.137(c)(2) is also a corrosive material. Whenever practical, *in vitro* test methods authorized in § 173.137 of this part or historical data authorized in paragraph (c) of this section should be used to determine whether a material is corrosive.

(b) If human experience or other data indicate that the hazard of a material is greater or less than indicated by the results of the tests specified in paragraph (a) of this section, PHMSA may revise its classification or make the determination that the material is not subject to the requirements of this subchapter.

(c) Skin corrosion test data produced no later than September 30, 1995, using the procedures of part 173, appendix A, in effect on September 30, 1995 (see 49 CFR part 173, appendix A, revised as of

ED_001691B_00009240

October 1, 1994) for appropriate exposure times may be used for classification and assignment of packing group for Class 8 materials corrosive to skin.

[Amdt. 173–224, 55 FR 52634, Dec. 21, 1990, as amended at 56 FR 66270, Dec. 20, 1991; Amdt. 173–234, 58 FR 51532, Oct. 1, 1993; Amdt. 173–241, 59 FR 67508, Dec. 29, 1994; Amdt. 173–261, 62 FR 24732, May 6, 1997; 69 FR 76155, Dec. 20, 2004; 71 FR 78631, Dec. 29, 2006; 76 FR 3372, Jan. 19, 2011]

§ 173.137 Class 8—Assignment of packing group.

The packing group of a Class 8 material is indicated in Column 5 of the § 172.101 Table. When the § 172.101 Table provides more than one packing group for a Class 8 material, the packing group must be determined using data obtained from tests conducted in accordance with the OECD Guideline for the Testing of Chemicals, Number 435, "*In Vitro* Membrane Barrier Test Method for Skin Corrosion" (IBR, *see* § 171.7 of this subchapter) or Number 404, "Acute Dermal Irritation/Corrosion" (IBR, *see* § 171.7 of this subchapter). A material that is determined not to be corrosive in accordance with OECD Guideline for the Testing of Chemicals, Number 430, "*In Vitro* Skin Corrosion: Transcutaneous Electrical Resistance Test (TER)" (IBR, *see* § 171.7 of this subchapter) or Number 431, "*In Vitro* Skin Corrosion: Human Skin Model Test" (IBR, *see* § 171.7 of this subchapter) may be considered not to be corrosive to human skin for the purposes of this subchapter without further testing. However, a material determined to be corrosive in accordance with Number 430 or Number 431 must be further tested using Number 435 or Number 404. The packing group assignment using data obtained from tests conducted in accordance with OECD Guideline Number 404 or Number 435 must be as follows:

(a) *Packing Group I.* Materials that cause full thickness destruction of intact skin tissue within an observation period of up to 60 minutes starting after the exposure time of three minutes or less.

(b) *Packing Group II.* Materials other than those meeting Packing Group I criteria that cause full thickness destruction of intact skin tissue within an observation period of up to 14 days starting after the exposure time of more than three minutes but not more than 60 minutes.

(c) *Packing Group III.* Materials, other than those meeting Packing Group I or II criteria—

(1) That cause full thickness destruction of intact skin tissue within an observation period of up to 14 days starting after the exposure time of more than 60 minutes but not more than 4 hours; or

(2) That do not cause full thickness destruction of intact skin tissue but exhibit a corrosion on either steel or aluminum surfaces exceeding 6.25 mm (0.25 inch) a year at a test temperature of 55 °C (130 °F) when tested on both materials. The corrosion may be determined in accordance with the UN Manual of Tests and Criteria (IBR, see § 171.7 of this subchapter) or other equivalent test methods.

NOTE TO § 173.137: When an initial test on either a steel or aluminum surface indicates the material being tested is corrosive, the follow up test on the other surface is not required.

[Amdt. 173–224, 55 FR 52634, Dec. 21, 1990, as amended at 56 FR 66270, Dec. 20, 1991; Amdt. 173–241, 59 FR 67508, Dec. 29, 1994; Amdt. 173–261, 62 FR 24733, May 6, 1997; 68 FR 75744, Dec. 31, 2003; 69 FR 76155, Dec. 20, 2004; 71 FR 78631, Dec. 29, 2006; 74 FR 2257, Jan. 14, 2009; 76 FR 3372, Jan. 19, 2011]

§ 173.140 Class 9—Definitions.

For the purposes of this subchapter, *miscellaneous hazardous material* (Class 9) means a material which presents a hazard during transportation but which does not meet the definition of any other hazard class. This class includes:

(a) Any material which has an anesthetic, noxious or other similar property which could cause extreme annoyance or discomfort to a flight crew member so as to prevent the correct performance of assigned duties; or

(b) Any material that meets the definition in § 171.8 of this subchapter for an elevated temperature material, a hazardous substance, a hazardous waste, or a marine pollutant.

[Amdt. 173–224, 57 FR 45463, Oct. 1, 1992, as amended by Amdt. 173–231, 57 FR 52939, Nov. 5, 1992; Amdt. 173–233, 58 FR 33305, June 16, 1993]

ED_001691B_00009240

§ 173.141 Class 9—Assignment of packing group.

The packing group of a Class 9 material is as indicated in column 5 of the § 172.101 table.

§ 173.144 Other Regulated Material (ORM)—Definitions.

Until December 31, 2020 and for the purposes of this subchapter, "ORM–D material" means a material such as a Consumer commodity, Cartridges, small arms, Cartridges, power devices (*used to project fastening devices*), Cartridges for tools, blank, and Cases, cartridge, empty with primer, which, although otherwise subject to the regulations of this subchapter, presents a limited hazard during transportation due to its form, quantity and packaging. The article or substance must be a material for which exceptions are provided in Column (8A) of the § 172.101 Hazardous Materials Table.

[78 FR 65481, Oct. 31, 2013]

§ 173.145 Other Regulated Materials—Assignment of packing group.

Packing groups are not assigned to ORM-D materials.

§ 173.150 Exceptions for Class 3 (flammable and combustible liquids).

(a) *General.* Exceptions for hazardous materials shipments in the following paragraphs are permitted only if this section is referenced for the specific hazardous material in the § 172.101 Table of this subchapter.

(b) *Limited quantities.* Limited quantities of flammable liquids (Class 3) and combustible liquids are excepted from labeling requirements, unless the material is offered for transportation or transported by aircraft, and are excepted from the specification packaging requirements of this subchapter when packaged in combination packagings according to this paragraph. For transportation by aircraft, the package must also conform to applicable requirements of § 173.27 of this part (*e.g.*, authorized materials, inner packaging quantity limits and closure securement) and only hazardous material authorized aboard passenger-carrying aircraft may be transported as a limited quantity. A limited quantity package that conforms to the provisions of this section is not subject to the shipping paper requirements of subpart C of part 172 of this subchapter, unless the material meets the definition of a hazardous substance, hazardous waste, marine pollutant, or is offered for transportation and transported by aircraft or vessel, and is eligible for the exceptions provided in § 173.156 of this part. In addition, shipments of limited quantities are not subject to subpart F (Placarding) of part 172 of this subchapter. Each package must conform to the packaging requirements of subpart B of this part and may not exceed 30 kg (66 pounds) gross weight. Except for transportation by aircraft, the following combination packagings are authorized:

(1) For flammable liquids in Packing Group I, inner packagings not over 0.5 L (0.1 gallon) net capacity each, packed in a strong outer packaging;

(2) For flammable liquids in Packing Group II, inner packagings not over 1.0 L (0.3 gallons) net capacity each, packed in a strong outer packaging.

(3) For flammable liquids in Packing Group III and combustible liquids, inner packagings not over 5.0 L (1.3 gallons) net capacity each, packed in a strong outer packaging.

(c) *Consumer commodities.* Until December 31, 2020, a limited quantity package containing a "consumer commodity" as defined in § 171.8 of this subchapter, may be renamed "Consumer commodity" and reclassed as ORM–D or, until December 31, 2012, as ORM–D–AIR material and offered for transportation and transported in accordance with the applicable provisions of this subchapter in effect on October 1, 2010.

(d) *Alcoholic beverages.* (1) An alcoholic beverage (wine and distilled spirits as defined in 27 CFR 4.10 and 5.11), when transported via motor vehicle, vessel, or rail, is not subject to the requirements of this subchapter if the alcoholic beverage:

(i) Contains 24 percent or less alcohol by volume;

(ii) Is contained in an inner packaging of 5 L (1.3 gallons) or less; or

(iii) Is a Packing Group III alcoholic beverage contained in a packaging 250 liters (66 gallons) or less;

(2) An alcoholic beverage (wine and distilled spirits as defined in 27 CFR 4.10 and 5.11), when transported via aircraft, is not subject to the requirements of this subchapter if the alcoholic beverage:

(i) Contains 24 percent or less alcohol by volume;

(ii) For transportation aboard a passenger-carrying aircraft, contains more than 24% but not more than 70% alcohol by volume when in unopened retail packagings not exceeding 5 liters (1.3 gallons) carried in carry-on or checked baggage, with a total net quantity per person of 5 liters (1.3) gallons (See §175.10(a)(4) of this subchapter); or

(iii) When carried as cargo, contains more than 24% but not more than 70% alcohol by volume in an inner packaging not exceeding 5 L (1.3 gallons).

(e) *Aqueous solutions of alcohol.* An aqueous solution containing 24 percent or less alcohol by volume and no other hazardous material—

(1) May be reclassed as a combustible liquid.

(2) Is not subject to the requirements of this subchapter if it contains no less than 50 percent water.

(f) *Combustible liquids.* (1) A flammable liquid with a flash point at or above 38 °C (100 °F) that does not meet the definition of any other hazard class may be reclassed as a combustible liquid. This provision does not apply to transportation by vessel or aircraft, except where other means of transportation is impracticable.

(2) The requirements in this subchapter do not apply to a material classed as a combustible liquid in a non-bulk packaging unless the combustible liquid is a hazardous substance, a hazardous waste, or a marine pollutant.

(3) A combustible liquid that is in a bulk packaging or a combustible liquid that is a hazardous substance, a hazardous waste, or a marine pollutant is not subject to the requirements of this subchapter except those pertaining to:

(i) Shipping papers, waybills, switching orders, and hazardous waste manifests;

(ii) Marking of packages;

(iii) Display of identification numbers on bulk packages;

(iv) For bulk packagings only, placarding requirements of subpart F of part 172 of this subchapter;

(v) Carriage aboard aircraft and vessels (for packaging requirements for transport by vessel, see §176.340 of this subchapter);

(vi) Reporting incidents as prescribed by §§171.15 and 171.16 of this subchapter;

(vii) Packaging requirements of subpart B of this part and, in addition, non-bulk packagings must conform with requirements of §173.203;

(viii) The requirements of §§173.1, 173.21, 173.24, 173.24a, 173.24b, 174.1, 177.804, 177.817, 177.834(j), and 177.837(d) of this subchapter;

(ix) The training requirements of subpart H of part 172 of this subchapter.

(x) Emergency response information requirements of subpart G of part 172.

(4) A combustible liquid that is not a hazardous substance, a hazardous waste, or a marine pollutant is not subject to the requirements of this subchapter if it is a mixture of one or more components that—

(i) Has a flash point at or above 93 °C (200 °F),

(ii) Comprises at least 99 percent of the volume of the mixture, and

(iii) Is not offered for transportation or transported as a liquid at a temperature at or above its flash point.

(g) *Limited quantities of retail products containing ethyl alcohol.* (1) Beverages, food, cosmetics and medicines, medical screening solutions, and concentrates sold as retail products containing ethyl alcohol classed as a flammable liquid or flammable solid containing not more than 70% ethyl alcohol by volume for liquids, by weight for solids are excepted from the HMR provided that:

(i) For non-glass inner packagings:

(A) The volume does not exceed 16 fluid ounces in capacity for liquids; or

(B) For volumes greater than 16 fluid ounces but not exceeding 1 gallon the company name and the words "Contains Ethyl Alcohol" are marked on the package;

(C) Solids containing ethyl alcohol may be packaged in non-glass inner packagings not exceeding 1 pounds capacity;

ED_001691B_00009240

(D) For weight greater than one pound up to 8 pounds the company name and the words "Contains Ethyl Alcohol" are marked on the package.

(ii) For glass inner packagings:

(A) The volume does not exceed 8 fluid ounces in capacity; or

(B) For volumes greater than 8 fluid ounces to 16 fluid ounces the company name and the words "Contains Ethyl Alcohol" are marked on the package;

(C) Solids containing ethyl alcohol may be packaged in glass inner packagings not exceeding ½ pound;

(D) For weight greater than ½ pound up to 1 pound the company name and the words "Contains Ethyl Alcohol" are marked on the package.

(iii) The net liquid contents of all inner packagings in any single outer packaging may not exceed 192 fluid ounces. The net solid contents of all inner packagings in any single outer packaging may not exceed 32 pounds. The gross weight of any single outer package shipped may not exceed 65 pounds; Inner packagings must secured and cushioned within the outer package to prevent breakage, leakage, and movement.

(2) Beverages, food, cosmetics and medicines, medical screening solutions, and concentrates sold as retail products containing ethyl alcohol classed as a flammable liquid or flammable solid containing more than 70% ethyl alcohol by volume, by weight for solids are excepted from the HMR provided that:

(i) For inner packagings containing liquids the volume does not exceed 8 fluid ounces in capacity;

(ii) Solids containing ethyl alcohol are not packed in inner packagings exceeding ½ pound in weight;

(iii) The net liquid contents of all inner packagings in any single outer packaging may not exceed 192 fluid ounces. The net solid contents of all inner packagings in any single outer packaging may not exceed 32 pounds. The gross weight of any single outer package shipped may not exceed 65 pounds. Inner packagings must be secured and cushioned within the outer package to prevent breakage, leakage, and movement.

(3) For transportation by passenger or cargo aircraft, no outer package may be transported which contains an inner packaging exceeding:

(i) 16 fluid ounces of flammable liquid, or

(ii) 1 pound of solids containing flammable liquid.

[Amdt. 173–224, 55 FR 52634, Dec. 21, 1990]

EDITORIAL NOTE: For FEDERAL REGISTER citations affecting § 173.150, see the List of CFR Sections Affected, which appears in the Finding Aids section of the printed volume and at *www.fdsys.gov*.

§ 173.151 Exceptions for Class 4.

(a) *General.* Exceptions for hazardous materials shipments in the following paragraphs are permitted only if this section is referenced for the specific hazardous material in the § 172.101 table of this subchapter.

(b) *Limited quantities of Division 4.1.* (1) Limited quantities of flammable solids (Division 4.1) in Packing Groups II and III and, where authorized by this section, charcoal briquettes (Division 4.2) in Packing Group III, are excepted from labeling requirements unless the material is offered for transportation or transported by aircraft, and are excepted from the specification packaging requirements of this subchapter when packaged in combination packagings according to this paragraph. If authorized for transportation by aircraft, the package must also conform to applicable requirements of § 173.27 of this part (*e.g.*, authorized materials, inner packaging quantity limits and closure securement) and only hazardous material authorized aboard passenger-carrying aircraft may be transported as a limited quantity. A limited quantity package that conforms to the provisions of this section is not subject to the shipping paper requirements of subpart C of part 172 of this subchapter, unless the material meets the definition of a hazardous substance, hazardous waste, marine pollutant, or is offered for transportation and transported by aircraft or vessel, and is eligible for the exceptions provided in § 173.156 of this part. In addition, shipments of limited quantities are not subject to subpart F (Placarding) of part 172 of this subchapter. Each package must conform to the packaging requirements of subpart B of this part and may not exceed 30 kg (66 pounds)

ED_001691B_00009240

gross weight. Except for transportation by aircraft, the following combination packagings are authorized:

(i) For flammable solids in Packing Group II, inner packagings not over 1.0 kg (2.2 pounds) net capacity each, packed in a strong outer packaging.

(ii) For flammable solids in Packing Group III, inner packagings not over 5.0 kg (11 pounds) net capacity each, packed in a strong outer packaging.

(2) For transportation by highway or rail, Charcoal briquettes (NA1361) may be packaged as a limited quantity in accordance with paragraph (b) of this section in packagings not exceeding 30 kg gross weight and are eligible for the exceptions provided in § 173.156.

(c) *Consumer commodities.* Until December 31, 2020, a limited quantity package (including Charcoal briquettes (NA1361)) containing a "consumer commodity" as defined in § 171.8 of this subchapter, may be renamed "Consumer commodity" and reclassed as ORM–D or, until December 31, 2012, as ORM–D–AIR material and offered for transportation and transported in accordance with the applicable provisions of this subchapter in effect on October 1, 2010. For transportation by aircraft, the maximum net mass for Charcoal briquettes (NA1361) is 25 kg per package.

(d) *Limited quantities of Division 4.3.* Limited quantities of dangerous when wet solids (Division 4.3) in Packing Groups II and III are excepted from labeling requirements, unless the material is offered for transportation or transported by aircraft, and are excepted from the specification packaging requirements of this subchapter when packaged in combination packagings according to this paragraph. For transportation by aircraft, the package must also conform to applicable requirements of § 173.27 of this part (*e.g.*, authorized materials, inner packaging quantity limits and closure securement) and only hazardous material authorized aboard passenger-carrying aircraft may be transported as a limited quantity. A limited quantity package that conforms to the provisions of this section is not subject to the shipping paper requirements of subpart C of part 172 of this subchapter, unless the material meets the definition of a hazardous substance, hazardous waste, marine pollutant, or is offered for transportation and transported by aircraft or vessel. In addition, shipments of limited quantities are not subject to subpart F (Placarding) of part 172 of this subchapter. Each package must conform to the packaging requirements of subpart B of this part and may not exceed 30 kg (66 pounds) gross weight. Except for transportation by aircraft, the following combination packagings are authorized:

(1) For dangerous when wet solids in Packing Group II, inner packagings not over 0.5 kg (1.1 pounds) net capacity each, packed in a strong outer packaging.

(2) For dangerous when wet solids in Packing Group III, inner packagings not over 1.0 kg (2.2 pounds) net capacity each, packed in a strong outer packaging.

[Amdt. 173–224, 55 FR 52634, Dec. 21, 1990, as amended by Amdt. 173–231, 57 FR 52940, Nov. 5, 1992; Amdt. 173–234, 58 FR 51532, Oct. 1, 1993; Amdt. 173–255, 61 FR 50626, Sept. 26, 1996; 69 FR 76156, Dec. 20, 2004; 70 FR 34398, June 14, 2005; 71 FR 14602, Mar. 22, 2006; 72 FR 55692, Oct. 1, 2007; 76 FR 3373, Jan. 19, 2011; 76 FR 82177, Dec. 30, 2011; 78 FR 1114, Jan. 7, 2013; 80 FR 1156, Jan. 8, 2015]

§ 173.152 Exceptions for Division 5.1 (oxidizers) and Division 5.2 (organic peroxides).

(a) *General.* Exceptions for hazardous materials shipments in the following paragraphs are permitted only if this section is referenced for the specific hazardous material in the § 172.101 table of this subchapter.

(b) *Limited quantities.* Limited quantities of oxidizers (Division 5.1) in Packing Group II and III and organic peroxides (Division 5.2) are excepted from labeling requirements, unless the material is offered for transportation or transported by aircraft, and are excepted from the specification packaging requirements of this subchapter when packaged in combination packagings according to this paragraph. For transportation by aircraft, the package must also conform to applicable requirements of § 173.27 of this part (*e.g.*, authorized materials, inner packaging quantity limits and closure securement) and only hazardous material authorized aboard passenger-carrying aircraft may be transported as a limited

ED_001691B_00009240

quantity. A limited quantity package that conforms to the provisions of this section is not subject to the shipping paper requirements of subpart C of part 172 of this subchapter, unless the material meets the definition of a hazardous substance, hazardous waste, marine pollutant, or is offered for transportation and transported by aircraft or vessel, and is eligible for the exceptions provided in § 173.156 of this part. In addition, shipments of limited quantities are not subject to subpart F (Placarding) of part 172 of this subchapter. Each package must conform to the packaging requirements of subpart B of this part and may not exceed 30 kg (66 pounds) gross weight. Except for transportation by aircraft, the following combination packagings are authorized:

(1) For oxidizers in Packing Group II, inner packagings not over 1.0 L (0.3 gallon) net capacity each for liquids or not over 1.0 kg (2.2 pounds) net capacity each for solids, packed in a strong outer packaging.

(2) For oxidizers in Packing Group III, inner packagings not over 5 L (1.3 gallons) net capacity each for liquids or not over 5.0 kg (11 lbs) net capacity each for solids, packed in a strong outer packaging.

(3) For organic peroxides that do not require temperature control during transportation—

(i) Except for transportation by aircraft, for Type B or C organic peroxides, inner packagings not over 25 mL (0.845 ounces) net capacity each for liquids or 100 g (3.528 ounces) net capacity for solids, packed in a strong outer packaging.

(ii) For Type D, E, or F organic peroxides, inner packagings not over 125 mL (4.22 ounces) net capacity each for liquids or 500 g (17.64 ounces) net capacity for solids, packed in a strong outer packaging.

(c) *Consumer commodities.* Until December 31, 2020, a limited quantity package containing a "consumer commodity" as defined in § 171.8 of this subchapter, may be renamed "Consumer commodity" and reclassed as ORM–D or, until December 31, 2012, as ORM–D–AIR material and offered for transportation and transported in accordance with the applicable provisions of this subchapter in effect on October 1, 2010.

[Amdt. 173–224, 55 FR 52634, Dec. 21, 1990, as amended by Amdt. 173–231, 57 FR 52940, Nov. 5, 1992; Amdt. 173–241, 59 FR 67508, Dec. 29, 1994; Amdt. 173–261, 62 FR 24733, May 6, 1997; 66 FR 45381, Aug. 28, 2001; 68 FR 45033, July 31, 2003; 69 FR 76156, Dec. 20, 2004; 71 FR 14603, Mar. 22, 2006; 72 FR 55692, Oct. 1, 2007; 76 FR 3374, Jan. 19, 2011; 78 FR 1114, Jan. 7, 2013]

§ 173.153 Exceptions for Division 6.1 (poisonous materials).

(a) *General.* Exceptions for hazardous materials shipments in the following paragraphs are permitted only if this section is referenced for the specific hazardous material in the § 172.101 table of this subchapter.

(b) *Limited quantities.* The exceptions in this paragraph do not apply to poison-by-inhalation materials. Limited quantities of poisonous material (Division 6.1) in Packing Groups II and III are excepted from the labeling requirements, unless the material is offered for transportation or transported by aircraft, and are excepted from the specification packaging requirements of this subchapter when packaged in combination packagings according to this paragraph. For transportation by aircraft, the package must also conform to applicable requirements of § 173.27 of this part (*e.g.*, authorized materials, inner packaging quantity limits and closure securement) and only hazardous material authorized aboard passenger-carrying aircraft may be transported as a limited quantity. A limited quantity package that conforms to the provisions of this section is not subject to the shipping paper requirements of subpart C of part 172 of this subchapter, unless the material meets the definition of a hazardous substance, hazardous waste, marine pollutant, or is offered for transportation and transported by aircraft or vessel, and is eligible for the exceptions provided in § 173.156 of this part. In addition, shipments of limited quantities are not subject to subpart F (Placarding) of part 172 of this subchapter. Each package must conform to the packaging requirements of subpart B of this part and may not exceed 30 kg (66 pounds) gross weight. Except

ED_001691B_00009240

for transportation by aircraft, the following combination packagings are authorized:

(1) For poisonous materials in Packing Group II, inner packagings not over 100 mL (3.38 ounces) each for liquids or 0.5 kg (1.1 pounds) each for solids, packed in a strong outer packaging. Inner packagings containing a liquid poisonous material which is also a drug or medicine in Packing Group II may be increased to not over 250 mL (8 ounces) each and packed in a strong outer packaging.

(2) For poisonous materials in Packing Group III, inner packagings not over 5 L (1.3 gallons) each for liquids or 5.0 kg (11 pounds) each for solids, packed in a strong outer packaging.

(c) *Consumer commodities.* Until December 31, 2020, a limited quantity package of poisonous material in Packing Group III or a drug or medicine in Packing Group II or III that is also a "consumer commodity" as defined in §171.8 of this subchapter, may be renamed "Consumer commodity" and reclassed as ORM–D or, until December 31, 2012, as ORM–D–AIR material and offered for transportation and transported in accordance with the applicable provisions of this subchapter in effect on October 1, 2010.

[Amdt. 173–224, 55 FR 52634, Dec. 21, 1990, as amended by Amdt. 173–231, 57 FR 52940, Nov. 5, 1992; 66 FR 45381, Aug. 28, 2001; 68 FR 45033, July 31, 2003; 69 FR 76156, Dec. 20, 2004; 71 FR 14603, Mar. 22, 2006; 71 FR 54938, Sept. 20, 2006; 76 FR 3374, Jan. 19, 2011; 78 FR 1114, Jan. 7, 2013]

§ 173.154 Exceptions for Class 8 (corrosive materials).

(a) *General.* Exceptions for hazardous materials shipments in the following paragraphs are permitted only if this section is referenced for the specific hazardous material in the §172.101 table of this subchapter.

(b) *Limited quantities.* Limited quantities of corrosive material (Class 8) in Packing Groups II and III are excepted from labeling requirements, unless the material is offered for transportation or transported by aircraft, and are excepted from the specification packaging requirements of this subchapter when packaged in combination packagings according to this paragraph. For transportation by aircraft, the package must also conform to the applicable requirements of §173.27 of this part (*e.g.*, authorized materials, inner packaging quantity limits and closure securement) and only hazardous material authorized aboard passenger-carrying aircraft may be transported as a limited quantity. A limited quantity package that conforms to the provisions of this section is not subject to the shipping paper requirements of subpart C of part 172 of this subchapter, unless the material meets the definition of a hazardous substance, hazardous waste, marine pollutant, or is offered for transportation and transported by aircraft or vessel, and is eligible for the exceptions provided in §173.156 of this part. In addition, shipments of limited quantities are not subject to subpart F (Placarding) of part 172 of this subchapter. Each package must conform to the packaging requirements of subpart B of this part and may not exceed 30 kg (66 pounds) gross weight. Except for transportation by aircraft, the following combination packagings are authorized:

(1) For corrosive materials in Packing Group II, inner packagings not over 1.0 L (0.3 gallon) net capacity each for liquids or not over 1.0 kg (2.2 pounds) net capacity each for solids, packed in a strong outer packaging.

(2) For corrosive materials in Packing Group III, inner packagings not over 5.0 L (1.3 gallons) net capacity each for liquids or not over 5.0 kg (11 lbs) net capacity each for solids, packed in a strong outer packaging.

(c) *Consumer commodities.* Until December 31, 2020, a limited quantity package containing a "consumer commodity" as defined in §171.8 of this subchapter, may be renamed "Consumer commodity" and reclassed as ORM–D or, until December 31, 2012, as ORM–D–AIR material and offered for transportation and transported in accordance with the applicable provisions of this subchapter in effect on October 1, 2010.

(d) *Materials corrosive to aluminum or steel only.* Except for a hazardous substance, a hazardous waste, or a marine pollutant, a material classed as a Class 8, Packing Group III, material solely because of its corrosive effect—

ED_001691B_00009240

(1) On aluminum is not subject to any other requirements of this subchapter when transported by motor vehicle or rail car in a packaging constructed of materials that will not react dangerously with or be degraded by the corrosive material; or

(2) On steel is not subject to any other requirements of this subchapter when transported by motor vehicle or rail car in a bulk packaging constructed of materials that will not react dangerously with or be degraded by the corrosive material.

[Amdt. 173–224, 55 FR 52634, Dec. 21, 1990, as amended at 56 FR 66270, Dec. 20, 1991; 57 FR 45463, Oct. 1, 1992; Amdt. 173–231, 57 FR 52940, Nov. 5, 1992; 68 FR 45033, July 31, 2003; 69 FR 76157, Dec. 20, 2004; 71 FR 14603, Mar. 22, 2006; 72 FR 55693, Oct. 1, 2007; 76 FR 3374, Jan. 19, 2011; ; 78 FR 1114, Jan. 7, 2013]

§ 173.155 Exceptions for Class 9 (miscellaneous hazardous materials).

(a) *General.* Exceptions for hazardous materials shipments in the following paragraphs are permitted only if this section is referenced for the specific hazardous material in the § 172.101 table of this subchapter.

(b) *Limited quantities of Class 9 materials.* Limited quantities of miscellaneous hazardous materials in Packing Groups II and III are excepted from labeling requirements, unless the material is offered for transportation or transported by aircraft, and are excepted from the specification packaging requirements of this subchapter when packaged in combination packagings according to this paragraph. Unless otherwise specified in paragraph (c) of this section, packages of limited quantities intended for transportation by aircraft must conform to the applicable requirements (*e.g.,* authorized materials, inner packaging quantity limits and closure securement) of § 173.27 of this part. A limited quantity package that conforms to the provisions of this section is not subject to the shipping paper requirements of subpart C of part 172 of this subchapter, unless the material meets the definition of a hazardous substance, hazardous waste, marine pollutant, or is offered for transportation and transported by aircraft or vessel, and is eligible for the exceptions provided in § 173.156 of this part. In addition, packages of limited quantities are not subject to subpart F (Placarding) of part 172 of this subchapter. Each package must conform to the packaging requirements of subpart B of this part and may not exceed 30 kg (66 pounds) gross weight. Except for transportation by aircraft, the following combination packagings are authorized:

(1) For miscellaneous materials in Packing Group II, inner packagings not over 1.0 L (0.3 gallon) net capacity each for liquids or not over 1.0 kg (2.2 pounds) net capacity each for solids, packed in a strong outer packaging.

(2) For miscellaneous materials in Packing Group III, inner packagings not over 5.0 L (1.3 gallons) net capacity each for liquids or not over 5.0 kg (11 lbs) net capacity each for solids, packed in a strong outer packaging.

(c) *Consumer commodities.* Until December 31, 2020, a limited quantity package containing a "consumer commodity" as defined in § 171.8 of this subchapter, may be renamed "Consumer commodity" and reclassed as ORM–D or, until December 31, 2012, as ORM–D–AIR material and offered for transportation and transported in accordance with the applicable provisions of this subchapter in effect on October 1, 2010.

[Amdt. 173–224, 55 FR 52634, Dec. 21, 1990, as amended at 56 FR 66270, Dec. 20, 1991; Amdt. 173–231, 57 FR 52940, Nov. 5, 1992; Amdt. 173–253, 61 FR 27174, May 30, 1996; 71 FR 14603, Mar. 22, 2006; 76 FR 3375, Jan. 19, 2011; 78 FR 1114, Jan. 7, 2013]

§ 173.156 Exceptions for limited quantity and ORM.

(a) Exceptions for hazardous materials shipments in the following paragraphs are permitted only if this section is referenced for the specific hazardous material in the § 172.101 Table or in a packaging section in this part.

(b) Packagings for limited quantity and ORM–D are specified according to hazard class in §§ 173.150 through 173.155, 173.306 and 173.309(b). In addition to exceptions provided for limited quantity and ORM–D materials elsewhere in this part, the following are provided:

(1) Strong outer packagings as specified in this part, marking requirements specified in subpart D of part 172 of this

ED_001691B_00009240

subchapter, and the 30 kg (66 pounds) gross weight limitation when—

(i) Unitized in cages, carts, boxes or similar overpacks;

(ii) Offered for transportation or transported by:

(A) Rail;

(B) Private or contract motor carrier; or

(C) Common carrier in a vehicle under exclusive use for such service; and

(iii) Transported to or from a manufacturer, a distribution center, or a retail outlet, or transported to a disposal facility from one offeror.

(2) The 30 kg (66 pounds) gross weight limitation does not apply to packages of limited quantity materials marked in accordance with § 172.315 of this subchapter, or, until December 31, 2020, materials classed and marked as ORM–D and described as a Consumer commodity, as defined in § 171.8 of this subchapter, when offered for transportation or transported by highway or rail between a manufacturer, a distribution center, and a retail outlet provided—

(i) Inner packagings conform to the quantity limits for inner packagings specified in §§ 173.150(b), 173.152(b), 173.154(b), 173.155(b), 173.306 (a) and (b), and 173.309(b), as appropriate;

(ii) The inner packagings are packed into corrugated fiberboard trays to prevent them from moving freely;

(iii) The trays are placed in a fiberboard box which is banded and secured to a wooden pallet by metal, fabric, or plastic straps, to form a single palletized unit;

(iv) The package conforms to the general packaging requirements of subpart B of this part;

(v) The maximum net quantity of hazardous material permitted on one palletized unit is 250 kg (550 pounds); and

[78 FR 1114, Jan. 7, 2013, as amended at 78 FR 65481, Oct. 31, 2013]

Subpart E—Non-bulk Packaging for Hazardous Materials Other Than Class 1 and Class 7

SOURCE: Amdt. 173–224, 55 FR 52643, Dec. 21, 1990, unless otherwise noted.

§ 173.158 Nitric acid.

(a) Nitric acid exceeding 40 percent concentration may not be packaged with any other material.

(b) Nitric acid in any concentration which does not contain sulfuric acid or hydrochloric acid as impurities, when offered for transportation or transported by rail, highway, or water shall be packaged in specification containers as follows:

(1) 1A1 stainless steel drums are authorized, subject to the following limitations:

(i) Stainless steel used in drums must conform to the following thicknesses:

Nominal (marked) capacity (in liters) of 1A1 drum	Minimum thickness (in mm) of stainless steel
55	0.9
115	1.2
210	1.5
450	2.0

(ii) Drums weighing less than 85 percent of their original tare weight may not be used.

(iii) Type 304 or other grades of equivalent corrosion-resistant steels in the as-welded condition are permissible for nitric acid concentrations up to and including 78 percent.

(iv) For all concentrations of nitric acid, the following are permissible:

(A) Type 304 heat-treated (quenched in water at 1040 °C (1900 °F)),

(B) Stabilized Type 347 in the as-welded condition,

(C) Stabilized Type 347 stress-relieved (845–900 °C (1550–1650 °F)),

(D) Stabilized Type 347 heat-treated (quenched in water at 1040 °C (1900 °F)), or

(E) Other grades of equivalent corrosion resistance.

(v) All parts of drum exposed to lading must be capable of withstanding the corrosive effect of nitric acid to the extent that 65 percent boiling nitric acid does not penetrate the metal more than 0.0381 mm (0.002 inches) per month. (ASTM A 262 may be used for a suitable corrosion test procedure.)

(vi) In addition to marking required by § 178.503 of this subchapter, the following marks, in lettering of at least 12.7 mm (0.5 inch) height, must be placed on drums used to transport nitric acid:

ED_001691B_00009240

(A) The type of steel used in body and head sheets as identified by American Iron and Steel Institute type number, and, in addition, the letters "HT" following the steel designation on containers subject to stress relieving or heat treatment during manufacture.

(B) The thickness in mm of metal in thinnest part. When the thickness of metal in the body differs from that in the head, both must be indicated with slanting line between and with the gauge of the body indicated first.

(C) Original tare weight in kilograms, preceded by the letters "TW."

An example of the markings required by paragraphs (b)(1)(vi) (A), (B), and (C) of this section is "304HT/1.9/2.7/TW55."

(2) 4H1 expanded plastics outer packagings with glass inner receptacles of not greater than 2.5 L (0.66 gallon) capacity each. No more than four 2.5 L (0.66 gallon) inner receptacles may be packed in one outer packaging.

(c) Nitric acid of 80 percent or greater concentration which does not contain sulfuric acid or hydrochloric acid as impurities, when offered for transportation or transported by rail, highway, or water may be packaged in 1B1 aluminum drums.

(d) Nitric acid of 90 percent or greater concentration, when offered for transportation or transported by rail, highway, or water may be packaged as follows:

(1) In 4C1, 4C2, 4D or 4F wooden boxes with inner packagings consisting of glass bottles further individually overpacked in tightly closed metal packagings. Glass bottles must be of 2.5 L (0.66 gallon) or less capacity and cushioned with a non-reactive, absorbent material within the metal packagings.

(2) In combination packagings with 1A2, 1B2, 1N2, 1D, 1G, 1H2, 3H2, 4A, 4B, 4N or 4G outer packagings with inner glass packagings of 2.5 L (0.66 gallons) or less capacity cushioned with a non-reactive, absorbent material and packed within a tightly closed intermediate packaging of metal or plastic.

(e) Nitric acid of less than 90 percent concentration, when offered for transportation or transported by rail, highway, or water may be packaged in 4A, 4B, or 4N metal boxes, 4G fiberboard boxes or 4C1, 4C2, 4D or 4F wooden boxes with inside glass packagings of not over 2.5 L (0.66 gallon) capacity each.

(f) Nitric acid of 70 percent or less concentration, when offered for transportation or transported by rail, highway, or water, may be packaged as follows:

(1) In composite packagings 6PA1, 6PA2, 6PB1, 6PB2, 6PC, 6PD1, 6PH1, or 6PH2. 6HH1 and 6HA1 composite packaging with plastic inner receptacles meeting the compatibility requirements § 173.24(e) (e.g., PFA Teflon) are authorized.

(2) In 4H1 expanded plastic boxes with inner glass packagings of not over 2.5 L (0.66 gallon) each.

(3) In combination packagings with 1A2, 1B2, 1N2, 1D, 1G, 1H2, 3H2, 4C1, 4C2, 4D, 4F, 4G, 4A, 4B or 4N outer packagings and plastic inner packagings not over 2.5 L (0.66 gallon) capacity further individually overpacked in tightly closed metal packagings.

(g) Nitric acid of more than 70 percent concentration, when offered for transportation or transported by cargo aircraft only, must be packaged in combination packagings with 1A2, 1B2, 1N2, 1D, 1G, 1H2, 3H2, 4C1, 4C2, 4D, 4F, 4G, 4A, 4B or 4N outer packagings with glass or earthenware inner packagings of not over 1 L (0.3 gallon) or glass ampoules of not over 0.5 L (0.1 gallon).

(h) Nitric acid of less than 70 percent concentration, when offered for transportation in cargo aircraft only must be packaged in combination packagings with 1A2, 1B2, 1N2, 1D, 1G, 1H2, 3H2, 4C1, 4C2, 4D, 4F, 4G, 4A, 4B or 4N outer packagings with inner packagings of—

(1) Glass or earthenware not over 2.5 L (0.66 gallon) capacity;

(2) Plastic not over 2.5 L (0.66 gallon) capacity further individually overpacked in tightly closed metal packagings; or

(3) Glass ampoule not over 0.5 L (0.1 gallon) capacity.

[Amdt. 173–224, 55 FR 52643, Dec. 21, 1990, as amended at 56 FR 66270, Dec. 20, 1991; Amdt. 173–241, 59 FR 67509, Dec. 29, 1994; Amdt. 173–255, 61 FR 50626, Sept. 26, 1996; 68 FR 75744, Dec. 31, 2003; 78 FR 1085, Jan. 7, 2013]

§ 173.159 Batteries, wet.

(a) Electric storage batteries, containing electrolyte acid or alkaline

ED_001691B_00009240

corrosive battery fluid (wet batteries), may not be packed with other materials except as provided in paragraphs (g) and (h) of this section and in §§ 173.220 and 173.222; and any battery or battery-powered device must be prepared and packaged for transport in a manner to prevent:

(1) A dangerous evolution of heat (*i.e.*, an amount of heat sufficient to be dangerous to packaging or personal safety to include charring of packaging, melting of packaging, scorching of packaging, or other evidence);

(2) Short circuits, including, but not limited to:

(i) Packaging each battery or each battery-powered device when practicable, in fully enclosed inner packagings made of non-conductive material;

(ii) Separating or packaging batteries and battery-powered devices in a manner to prevent contact with other batteries, devices or conductive materials (*e.g.*, metal) in the packagings; or

(iii) Ensuring exposed terminals are protected with non-conductive caps, non-conductive tape, or by other appropriate means; and

(3) *Damage to terminals.* If not impact resistant, the outer packaging must not be used as the sole means of protecting the battery terminals from damage or short circuiting. Batteries must be securely cushioned and packed to prevent shifting which could loosen terminal caps or reorient the terminals. Batteries contained in devices must be securely installed. Terminal protection methods include but are not limited to:

(i) Securely attaching covers of sufficient strength to protect the terminals;

(ii) Packaging the battery in a rigid plastic packaging; or

(iii) Constructing the battery with terminals that are recessed or otherwise protected so that the terminals will not be subjected to damage if the package is dropped.

(b) For transportation by aircraft:

(1) The packaging for wet batteries must incorporate an acid- or alkali-proof liner, or include a supplementary packaging with sufficient strength and adequately sealed to prevent leakage of electrolyte fluid in the event of spillage; and

(2) Any battery-powered device, equipment or vehicle must be packaged for transport in a manner to prevent unintentional activation or must have an independent means of preventing unintentional activation (*e.g.*, packaging restricts access to activation switch, switch caps or locks, recessed switches, trigger locks, temperature sensitive circuit breakers, etc.).

(c) The following specification packagings are authorized for batteries packed without other materials provided all requirements of paragraph (a) of this section, and for transportation by aircraft, paragraph (b) of this section are met:

(1) Wooden box: 4C1, 4C2, 4D, or 4F.

(2) Fiberboard box: 4G.

(3) Plywood drum: 1D.

(4) Fiber drum: 1G.

(5) Plastic drum: 1H2.

(6) Plastic jerrican: 3H2.

(7) Plastic box: 4H2.

(d) The following non-specification packagings are authorized for batteries packed without other materials provided all requirements of paragraph (a) of this section, and for transportation by aircraft, paragraph (b) of this section are met:

(1) Electric storage batteries are firmly secured to skids or pallets capable of withstanding the shocks normally incident to transportation are authorized for transportation by rail, highway, or vessel. The height of the completed unit must not exceed 1½ times the width of the skid or pallet. The unit must be capable of withstanding, without damage, a superimposed weight equal to two times the weight of the unit or, if the weight of the unit exceeds 907 kg (2,000 pounds), a superimposed weight of 1814 kg (4,000 pounds). Battery terminals must not be relied upon to support any part of the superimposed weight and must not short out if a conductive material is placed in direct contact with them.

(2) Electric storage batteries weighing 225 kg (500 pounds) or more, consisting of carriers' equipment, may be shipped by rail when mounted on suitable skids. Such shipments may not be offered in interchange service.

ED_001691B_00009240

(3) One to three batteries not over 11.3 kg (25 pounds) each, packed in strong outer boxes. The maximum authorized gross weight is 34 kg (75 pounds).

(4) Not more than four batteries not over 7 kg (15 pounds) each, packed in strong outer fiberboard or wooden boxes. The maximum authorized gross weight is 30 kg (65 pounds).

(5) Not more than five batteries not over 4.5 kg (10 pounds) each, packed in strong outer fiberboard or wooden boxes. The maximum authorized gross weight is 30 kg (65 pounds).

(6) Single batteries not exceeding 34 kg (75 pounds) each, packed in 5-sided slip covers or in completely closed fiberboard boxes. Slip covers and boxes must be of solid or double-faced corrugated fiberboard of at least 91 kg (200 pounds) Mullen test strength. The slip cover or fiberboard box must fit snugly and provide inside top clearance of at least 1.3 cm (0.5 inch) above battery terminals and filler caps with reinforcement in place. Assembled for shipment, the bottom edges of the slipcover must come to within 2.5 cm (1 inch) of the bottom of the battery. The completed package (battery and box or slip cover) must be capable of withstanding a top-to-bottom compression test of at least 225 kg (500 pounds) without damage to battery terminal caps, cell covers or filler caps.

(7) Single batteries exceeding 34 kg (75 pounds) each may be packed in completely closed fiberboard boxes. Boxes must be of double-wall corrugated fiberboard of at least 181 kg (400 pounds) test, or solid fiberboard testing at least 181 kg (400 pounds); a box may have hand holes in its ends provided that the hand holes will not materially weaken the box. Sides and ends of the box must have cushioning between the battery and walls of the box; combined thickness of cushioning material and walls of the box must not be less than 1.3 cm (0.5 inch); and cushioning must be excelsior pads, corrugated fiberboard, or other suitable cushioning material. The bottom of the battery must be protected by a minimum of one excelsior pad or by a double-wall corrugated fiberboard pad. The top of the battery must be protected by a wood frame, corrugated trays or scored sheets of corrugated fiberboard having minimum test of 91 kg (200 pounds), or other equally effective cushioning material. Top protection must bear evenly on connectors and/or edges of the battery cover to facilitate stacking of batteries. No more than one battery may be placed in one box. The maximum authorized gross weight is 91 kg (200 pounds).

(e) When transported by highway or rail, electric storage batteries containing electrolyte or corrosive battery fluid are not subject to any other requirements of this subchapter, if all of the following are met:

(1) No other hazardous materials may be transported in the same vehicle;

(2) The batteries must be loaded or braced so as to prevent damage and short circuits in transit;

(3) Any other material loaded in the same vehicle must be blocked, braced, or otherwise secured to prevent contact with or damage to the batteries; and

(4) The transport vehicle may not carry material shipped by any person other than the shipper of the batteries.

(f) Batteries can be considered as non-spillable provided they are capable of withstanding the following two tests, without leakage of battery fluid from the battery:

(1) *Vibration test.* The battery must be rigidly clamped to the platform of a vibration machine, and a simple harmonic motion having an amplitude of 0.8 mm (0.03 inches) with a 1.6 mm (0.063 inches) maximum total excursion must be applied. The frequency must be varied at the rate of 1 Hz/min between the limits of 10 Hz to 55 Hz. The entire range of frequencies and return must be traversed in 95 ±5 minutes for each mounting position (direction of vibrator) of the battery. The battery must be tested in three mutually perpendicular positions (to include testing with fill openings and vents, if any, in an inverted position) for equal time periods.

(2) *Pressure differential test.* Following the vibration test, the battery must be stored for six hours at 24 °C ±4 °C (75 °F ±7 °F) while subjected to a pressure differential of at least 88 kPa (13 psig). The battery must be tested in three mutually perpendicular positions (to

ED_001691B_00009240

include testing with fill openings and vents, if any, in an inverted position) for at least six hours in each position.

(g) Electrolyte, acid or alkaline corrosive battery fluid, packed with batteries wet or dry, must be packed in one of the following specification packagings:

(1) In 4C1, 4C2, 4D, or 4F wooden boxes with inner receptacles of glass, not over 4.0 L (1 gallon) each with not over 8.0 L (2 gallons) total in each outside container. Inside containers must be well-cushioned and separated from batteries by a strong solid wooden partition. The completed package must conform to Packing Group III requirements.

(2) Electrolyte, acid, or alkaline corrosive battery fluid included with electric storage batteries and filling kits may be packed in strong rigid outer packagings when shipments are made by, for, or to the Departments of the Army, Navy, or Air Force of the United States. Packagings must conform to military specifications. The electrolyte, acid, or alkaline corrosive battery fluid must be packed in polyethylene bottles of not over 1.0 L (0.3 gallon) capacity each. Not more than 24 bottles, securely separated from electric storage batteries and kits, may be offered for transportation or transported in each package.

(3) In 4G fiberboard boxes with not more than 12 inside packagings of polyethylene or other material resistant to the lading, each not over 2.0 L (0.5 gallon) capacity each. Completed packages must conform to Packing Group III requirements. Inner packagings must be adequately separated from the storage battery. The maximum authorized gross weight is 29 kg (64 pounds). These packages are not authorized for transportation by aircraft.

(h) Dry batteries or battery charger devices may be packaged in 4G fiberboard boxes with inner receptacles containing battery fluid. Completed packagings must conform to Packing Group III requirements. Not more than 12 inner receptacles may be packed in one outer box. The maximum authorized gross weight is 34 kg (75 pounds).

(i) When approved by the Associate Administrator, electric storage batteries, containing electrolyte or corrosive battery fluid in a separate reservoir from which fluid is injected into the battery cells by a power device cartridge assembled with the battery, and which meet the criteria of paragraph (f) are not subject to any other requirements of this subchapter.

[74 FR 2257, Jan. 14, 2009]

§ 173.159a Exceptions for non-spillable batteries.

(a) Exceptions for hazardous materials shipments in the following paragraphs are permitted only if this section is referenced for the specific hazardous material in the §172.101 table or in a packaging section in this part.

(b) Non-spillable batteries offered for transportation or transported in accordance with this section are subject to the incident reporting requirements. For transportation by aircraft, a telephone report in accordance with §171.15(a) is required if a fire, violent rupture, explosion or dangerous evolution of heat (*i.e.*, an amount of heat sufficient to be dangerous to packaging or personal safety to include charring of packaging, melting of packaging, scorching of packaging, or other evidence) occurs as a direct result of a non-spillable battery. For all modes of transportation, a written report in accordance with §171.16(a) is required if a fire, violent rupture, explosion or dangerous evolution of heat occurs as a direct result of a non-spillable battery.

(c) Non-spillable batteries are excepted from the packaging requirements of §173.159 under the following conditions:

(1) Non-spillable batteries must be securely packed in strong outer packagings or secured to skids or pallets capable of withstanding the shocks normally incident to transportation. The batteries must meet the requirements of §173.159(a), be loaded or braced so as to prevent damage and short circuits in transit, and any other material loaded in the same vehicle must be blocked, braced, or otherwise secured to prevent contact with or damage to the batteries. A non-spillable battery which is an integral part of and necessary for the operation of mechanical or electronic equipment must be securely fastened in the battery holder on the equipment.

ED_001691B_00009240

(2) The battery and outer packaging must be plainly and durably marked "NON-SPILLABLE" or "NON-SPILLABLE BATTERY." The requirement to mark the outer package does not apply when the battery is installed in a piece of equipment that is transported unpackaged.

(d) Non-spillable batteries are excepted from all other requirements of this subchapter when offered for transportation and transported in accordance with paragraph (c) of this section and the following:

(1) At a temperature of 55 °C (131 °F), the battery must not contain any unabsorbed free-flowing liquid, and must be designed so that electrolyte will not flow from a ruptured or cracked case; and

(2) For transport by aircraft, when contained in a battery-powered device, equipment or vehicle must be prepared and packaged for transport in a manner to prevent unintentional activation in conformance with § 173.159(b)(2) of this Subpart.

(3) For transport by aircraft, must be transported as cargo and may not be carried onboard an aircraft by passengers or crewmembers in carry-on baggage, checked baggage, or on their person unless specifically excepted by § 175.10.

[74 FR 2258, Jan. 14, 2009, as amended at 75 FR 72, Jan. 4, 2010; 77 FR 60942, Oct. 5, 2012; 78 FR 1085, Jan. 7, 2013; 78 FR 15328, Mar. 11, 2013]

§ 173.160 Bombs, smoke, non-explosive (corrosive).

Bombs, smoke, non-explosive may be shipped provided they are without ignition elements, bursting charges, detonating fuses or other explosive components. They must be packaged in metal (4A, 4B, 4N), wooden (4C1, 4C2), plywood (4D), or reconstituted wood (4F), fiberboard (4G) or solid plastic (4H2) boxes, or metal (1A2, 1B2, 1N2), plastic (1H2), plywood drums (1D), or fiber (1G) drums that meet Packing Group II requirements.

[78 FR 1085, Jan. 7, 2013]

§ 173.161 Chemical kits and first aid kits.

(a) *Applicability.* Chemical kits and first aid kits contain one or more compatible items of hazardous materials in boxes, cases, *etc.* that, for example, are used for medical, analytical, diagnostic, testing, or repair purposes.

(b) *Authorized materials.* (1) The kits may only contain hazardous materials for which packaging exceptions are provided in column 8(A) of the § 172.101 Hazardous Materials Table in this subchapter. For transportation by aircraft, the kits may only contain quantities of hazardous materials authorized as excepted quantities or as limited quantities in §§ 173.4a and 173.27(f) of this part, respectively. Materials forbidden for transportation by passenger aircraft or cargo aircraft may not be included in the kits.

(2) The packing group assigned to the chemical kit and first aid kit as a whole must be the most stringent packing group assigned to any individual substance in the kit. The packing group must be shown on the shipping paper. Where the kit contains only hazardous materials to which no packing group is assigned, the packagings shall meet the Packing Group II performance level. Where the kit contains only hazardous materials to which no packing group is assigned, the packing group does not have to be indicated on the shipping paper.

(c) *Packaging.* Except for transportation by aircraft or vessel, chemical kits and first aid kits must be packaged in combination packagings conforming to the packaging requirements of subpart B of this part. For transportation by aircraft or vessel, chemical kits and first aid kits must be packaged in specification combination packagings based on the performance level of the most stringent packing group of material contained within the kit. For transportation by aircraft, friction-type closures must be secured by secondary means and inner packagings intended to contain liquids must be capable of meeting the pressure differential requirements prescribed in § 173.27(c) of this subchapter. Inner and outer packaging quantity limits for packages are as follows:

(1) Except for liquids of Division 5.2 (organic peroxide), inner packagings containing not more than 250 mL. Except for transportation by aircraft, for Division 5.2 (organic peroxide) liquids

ED_001691B_00009240

of Type B and C, inner packagings containing not more than 25 mL and for Division 5.2 (organic peroxide) liquids of Type D, E and F, inner packagings containing not more than 125 mL. For transportation by aircraft, for Division 5.2 (organic peroxide) liquids of Type D, E and F (only), inner packagings containing not more than 125 mL;

(2) Except for solids of Division 5.2 (organic peroxide) of Type B and C, inner packagings containing not more than 250 g. Except for transportation by aircraft, for a Division 5.2 (organic peroxide) solid of Type B and C, inner packagings containing not more than 100 g. For transportation by aircraft, for a Division 5.2 (organic peroxide) solid of Type D, E and F (only), inner packagings containing not more than 250 g;

(3) No more than 10 L or 10 kg of hazardous material may be contained in one outer package (excluding dry ice). For transportation by aircraft, no more than 1 L or 1 kg of hazardous material may be contained in one kit (excluding dry ice);

(4) Each package must conform to the packaging requirements of subpart B of this part and may not exceed 30 kg (66 pounds) gross weight;

(5) Except for Carbon dioxide, solid (Dry ice), UN1845, no other hazardous materials may be packed within the same outer packaging as the kits. Dry ice must be packaged in accordance with § 173.217 of this subchapter;

(6) The kits must include sufficient absorbent material to completely absorb the contents of any liquid hazardous materials contained in the kits. The contents must be separated, placed, or packed, and closed with cushioning material to protect them from damage; and

(7) The contents of the kits must be packed so there will be no possibility of the mixture of contents causing dangerous evolution of heat or gas.

(d) *Exceptions.* (1)(i) Chemical kits and first aid kits are eligible for the excepted quantity exceptions provided in §§ 173.4 and 173.4a of this part. For transportation by aircraft, chemical kits and first aid kits are eligible for the limited quantity provisions provided in § 173.27(f) of this part. For inner packaging quantity limits, *see* § 173.27(f), Table 3.

(ii) A package conforming to the provisions of this section is not subject to the shipping paper requirements of subpart C of part 172 of this subchapter, unless the material meets the definition of a hazardous substance, hazardous waste, marine pollutant, or is offered for transportation and transported by aircraft or vessel. Chemical kits and First aid kits conforming to this section may be marked as a limited quantity as prescribed in § 172.315 of this subchapter and, if applicable, are eligible for the exceptions provided in § 173.156 of this part. Additionally, chemical and first aid kits conforming to this section are not subject to part 174 (carriage by rail) or part 177 (carriage by highway) of this subchapter when marked in accordance with § 172.315 of this subchapter.

(2) Consumer commodities. Until December 31, 2020, a limited quantity package containing a "consumer commodity" as defined in § 171.8 of this subchapter may be renamed "Consumer commodity" and reclassed as ORM–D or, until December 31, 2012, as ORM–D–AIR material and offered for transportation and transported in accordance with the applicable provisions of this subchapter in effect on October 1, 2010.

(3) Kits that are carried on board transport vehicles for first aid or operating purposes are not subject to the requirements of this subchapter.

[76 FR 3375, Jan. 19, 2011, as amended at 78 FR 1115, Jan. 7, 2013; 80 FR 1157, Jan. 8, 2015]

§ 173.162 Gallium.

(a) Except when packaged in cylinders or steel flasks, gallium must be packaged in packagings which meet the requirements of part 178 of this subchapter at the Packing Group I performance level for transportation by aircraft, and at the Packing Group III performance level for transport by highway, rail or vessel, as follows:

(1) In combination packagings intended to contain liquids consisting of glass, earthenware or rigid plastic inner packagings with a maximum net mass of 15 kg (33 pounds) each. The inner packagings must be packed in wood boxes (4C1, 4C2, 4D, 4F), fiberboard boxes (4G), plastic boxes (4H1,

ED_001691B_00009240

4H2), fiber drums (1G) or steel, metal, other than steel or aluminum, and plastic drums or jerricans (1A1, 1A2, 1N1, 1N2, 1H1, 1H2, 3A2 or 3H2) with sufficient cushioning materials to prevent breakage. Either the inner packagings or the outer packagings must have an inner liner that is leakproof or bags of strong leakproof and puncture-resistant material impervious to the contents and completely surrounding the contents to prevent it from escaping from the package, irrespective of its position.

(2) In packagings intended to contain liquids consisting of semi-rigid plastic inner packagings of not more than 2.5 kg (5.5 pounds) net capacity each, individually enclosed in a sealed, leak-tight bag of strong puncture-resistant material. The sealed bags must be packed in wooden (4C1, 4C2), plywood (4D), reconstituted wood (4F), fiberboard (4G), plastic (4H1, 4H2) or metal, other than steel or aluminum (4N) boxes or in fiber (1G), steel (1A1, 1A2), metal, other than steel or aluminum (1N1, 1N2), or plastic (1H1 or 1H2) drums, that are lined with leak-tight, puncture-resistant material. Bags and liner material must be chemically resistant to gallium.

(3) Cylinders and steel flasks with vaulted bottoms are also authorized.

(b) When it is necessary to transport gallium at low temperatures in order to maintain it in a completely solid state, the above packagings may be overpacked in a strong, water-resistant outer packaging which contains dry ice or other means of refrigeration. If a refrigerant is used, all of the above materials used in the packaging of gallium must be chemically and physically resistant to the refrigerant and must have impact resistance at the low temperatures of the refrigerant employed. If dry ice is used, the outer packaging must permit the release of carbon dioxide gas.

(c) Manufactured articles or apparatuses, each containing not more than 100 mg (0.0035 ounce) of gallium and packaged so that the quantity of gallium per package does not exceed 1 g (0.35 ounce) are not subject to the requirements of this subchapter. For transportation by aircraft, such articles and apparatuses must be transported as cargo and may not be carried onboard an aircraft by passengers or crewmembers in carry-on baggage, checked baggage, or on their person unless specifically excepted by § 175.10.

[64 FR 10777, Mar. 5, 1999; as amended at 66 FR 33430, June 21, 2001; 78 FR 1085, Jan. 7, 2013]

§ 173.163 Hydrogen fluoride.

(a) Hydrogen fluoride (hydrofluoric acid, anhydrous) must be packaged as follows:

(1) In specification 3, 3A, 3AA, 3B, 3BN, or 3E cylinders; or in specification 4B, 4BA, or 4BW cylinders except that brazed 4B, 4BA, and 4BW cylinders are not authorized. The filling density may not exceed 85 percent of the cylinder's water weight capacity. In place of the periodic volumetric expansion test, cylinders used in exclusive service may be given a complete external visual inspection in conformance with part 180, subpart C, of this subchapter, at the time such requalification becomes due.

(2) In a UN cylinder, as specified in part 178 of this subchapter, having a minimum test pressure of 10 bar and a maximum filling ratio of 0.84.

(b) A cylinder removed from hydrogen fluoride service must be condemned in accordance with § 180.205 of this subchapter. Alternatively, at the direction of the owner, the requalifier may render the cylinder incapable of holding pressure.

[71 FR 33880, June 12, 2006]

§ 173.164 Mercury (metallic and articles containing mercury).

(a) For transportation by aircraft, mercury must be packaged in packagings which meet the requirements of part 178 of this subchapter at the Packing Group I performance level, as follows:

(1) In inner packagings of earthenware, glass or plastic containing not more than 3.5 kg (7.7 pounds) of mercury, or inner packagings that are glass ampoules containing not more than 0.5 kg (1.1 pounds) of mercury, or iron or steel quicksilver flasks containing not more than 35 kg (77 pounds) of mercury. The inner packagings or flasks must be packed in steel drums (1A1, 1A2), metal, other than steel or

ED_001691B_00009240

aluminum drums (1N1, 1N2), steel jerricans (3A2), wooden boxes (4C1, 4C2), plywood boxes (4D), reconstituted wood boxes (4F), fiberboard boxes (4G), metal, other than steel or aluminum boxes (4N), plastic boxes (4H2), plywood drums (1D) or fiber drums (1G).

(2) [Reserved]

(3) When inner packagings of earthenware, glass or plastic are used, they must be packed in the outer packaging with sufficient cushioning material to prevent breakage.

(4) Either the inner packagings or the outer packagings must have inner linings or bags of strong leakproof and puncture-resistant material impervious to mercury, completely surrounding the contents, so that the escape of mercury will be prevented irrespective of the position of the package.

(5) [Reserved]

(b) When transported as cargo, manufactured articles or apparatuses, each containing not more than 100 mg (0.0035 ounce) of mercury and packaged so that the quantity of mercury per package does not exceed 1 g (0.035 ounce) are not subject to the requirements of this subchapter.

(c) Manufactured articles or apparatuses containing mercury are excepted from the specification packaging requirements of this subchapter when packaged as follows:

(1) Manufactured articles or apparatuses of which metallic mercury is a component part, such as manometers, pumps, thermometers, switches, etc. (for electron tubes, mercury vapor tubes and similar tubes, see paragraph (c)(3) of this section), must be in strong outer packagings, having sealed inner liners or bags of strong leakproof and puncture-resistant material impervious to mercury, which will prevent the escape of mercury from the package irrespective of its position. Mercury switches and relays are excepted from these packaging requirements, if they are totally enclosed, leakproof and in sealed metal or plastic units.

(2) When transported as cargo, thermometers, switches and relays, each containing a total quantity of not more than 15 g (0.53 ounces) of mercury, are excepted from the requirements of this subchapter if installed as an integral part of a machine or apparatus and so fitted that shock of impact damage, leading to leakage of mercury, is unlikely to occur under conditions normally incident to transport.

(3) Electron tubes, mercury vapor tubes and similar tubes must be packaged as follows:

(i) Tubes which are packed in strong outer packagings with all seams and joints sealed with self-adhesive, pressure-sensitive tape which will prevent the escape of mercury from the package, are authorized up to a total net quantity of 450 g (15.9 ounces) of mercury per package;

(ii) Tubes with more than 450 g (15.9 ounces) of mercury are authorized only when packed in strong outer packagings, having sealed inner liners or bags of strong leakproof and puncture-resistant material impervious to mercury which will prevent escape of mercury from the package irrespective of its position;

(iii) Tubes which do not contain more than 5 g (0.2 ounce) of mercury each and which are packed in the manufacturer's original packagings, are authorized up to a total net quantity of 30 g (1.1 ounces) of mercury per package;

(iv) Tubes which are completely jacketed in sealed leakproof metal cases are authorized in the manufacturer's original packagings.

(4) A person offering for transportation electron tubes, mercury vapor tubes, and similar tubes shall indicate the quantity of mercury therein on the shipping paper.

(5) Mercurial barometers conforming to paragraph (c)(1) of this section, which are loaded and unloaded from an aircraft under the supervision of, and accompanied in flight by, a National Weather Service official or similar United States agency official, are excepted from any other requirements of this subchapter.

(d) For transportation by other than aircraft, mercury must be packaged—

(1) In any packaging which meets the requirements of part 178 of this subchapter at the Packing Group III performance level; or

(2) In non-specification reusable metal packagings.

ED_001691B_00009240

(e) Except for a hazardous substance or a hazardous waste or for transportation by aircraft or vessel, packages containing less than 0.45 kg (1.0 pound) net weight of mercury are not subject to the requirements of this subchapter.

(f) For vessel transport, manufactured articles or instruments containing less than 0.45 kg (1.0 pound) of mercury are not subject to the requirements of this subchapter.

[Amdt. 173–224, 55 FR 52643, Dec. 21, 1990, as amended at 56 FR 66270, Dec. 20, 1991; Amdt. 173–241, 59 FR 67509, Dec. 29, 1994; Amdt. 173–246, 60 FR 49110, Sept. 21, 1995; 64 FR 10777, 10778, Mar. 5, 1999; 68 FR 57632, Oct. 6, 2003; 78 FR 1085, Jan. 7, 2013; 80 FR 1157, Jan. 8, 2015]

§ 173.165 Polyester resin kits.

(a) Polyester resin kits consisting of a base material component (Class 3, Packing Group II or III) and an activator component (Type D, E, or F organic peroxide that does not require temperature control)—

(1) The organic peroxide component must be packed in inner packagings not over 125 mL (4.22 fluid ounces) net capacity each for liquids or 500 g (17.64 ounces) net capacity each for solids.

(2)(i) Except for transportation by aircraft, the flammable liquid component must be packaged in suitable inner packagings.

(ii) For transportation by aircraft, a Packing Group II base material is limited to a quantity of 5 L (1.3 gallons) in metal or plastic inner packagings and 1 L (0.3 gallons) in glass inner packagings. A Packing Group III base material is limited to a quantity of 10 L (2.6 gallons) in metal or plastic inner packagings and 2.5 L (0.66 gallons) in glass inner packagings.

(3) If the flammable liquid component and the organic peroxide component will not interact dangerously in the event of leakage, they may be packed in the same outer packaging.

(4) The Packing Group assigned will be II or III, according to the criteria for Class 3, applied to the base material. Additionally, polyester resin kits must be packaged in specification combination packagings, based on the performance level required of the base material (II or III) contained within the kit, as prescribed in § 173.202 or § 173.203 of this subchapter, as appropriate.

(5) For transportation by aircraft, the following additional requirements apply:

(i) Closures on inner packagings containing liquids must be secured by secondary means;

(ii) Inner packagings containing liquids must be capable of meeting the pressure differential requirements prescribed in § 173.27(c); and

(iii) The total quantity of activator and base material may not exceed 5 kg (11 lbs) per package for a Packing Group II base material. The total quantity of activator and base material may not exceed 10 kg (22 lbs) per package for a Packing Group III base material. The total quantity of polyester resin kits per package is calculated on a one-to-one basis (*i.e.*, 1 L equals 1 kg).

(b) Polyester resin kits are eligible for the Small Quantity exceptions in § 173.4 and the Excepted Quantity exceptions in § 173.4a, as applicable.

(c) *Limited quantities.* Limited quantity packages of polyester resin kits are excepted from labeling requirements, unless the material is offered for transportation or transported by aircraft, and are excepted from the specification packaging requirements of this subchapter when packaged in combination packagings according to this paragraph. For transportation by aircraft, only hazardous material authorized aboard passenger-carrying aircraft may be transported as a limited quantity. A limited quantity package that conforms to the provisions of this section is not subject to the shipping paper requirements of subpart C of part 172 of this subchapter, unless the material meets the definition of a hazardous substance, hazardous waste, marine pollutant, or is offered for transportation and transported by aircraft or vessel, and is eligible for the exceptions provided in § 173.156 of this part. In addition, shipments of limited quantities are not subject to subpart F (Placarding) of part 172 of this subchapter. Each package must conform to the general packaging requirements of subpart B of this part and may not exceed 30 kg (66 pounds) gross weight.

(1) For other than transportation by aircraft, the organic peroxide component must be packed in inner packagings not over 125 mL (4.22 fluid

ED_001691B_00009240

ounces) net capacity each for liquids or 500 g (17.64 ounces) net capacity each for solids. For transportation by aircraft, the organic peroxide component must be packed in inner packagings not over 30 mL (4.22 fluid ounces) net capacity each for liquids or 100 g (17.64 ounces) net capacity each for solids.

(2) Except for transportation by aircraft, the flammable liquid component must be packed in inner packagings not over 5 L (1.3 gallons) net capacity each for a Packing Group II and Packing Group III liquid. For transportation by aircraft, the flammable liquid component must be packed in inner packagings not over 1 L (0.26 gallons) net capacity each for a Packing Group II material. The flammable liquid component must be packed in metal or plastic inner packagings not over 5.0 L (1.3 gallons) net capacity each or glass inner packagings not over 2.5 L (0.66 gallons) net capacity each for a Packing Group III material.

(3) If the flammable liquid component and the organic peroxide component will not interact dangerously in the event of leakage, they may be packed in the same outer packaging.

(4) For transportation by aircraft, the following additional requirements apply:

(i) Closures on inner packagings containing liquids must be secured by secondary means as prescribed in § 173.27(d);

(ii) Inner packagings containing liquids must be capable of meeting the pressure differential requirements prescribed in § 173.27(c);

(iii) The total quantity of activator and base material may not exceed 1 kg (2.2 lbs) per package for a Packing Group II base material. The total quantity of activator and base material may not exceed 5 kg (11 lbs) per package for a Packing Group III base material. The total quantity of polyester resin kits per package is calculated on a one-to-one basis (*i.e.*, 1 L equals 1 kg);

(iv) *Drop test capability.* Fragile inner packagings must be packaged to prevent failure under conditions normally incident to transport. Packages of consumer commodities must be capable of withstanding a 1.2 m drop on solid concrete in the position most likely to cause damage; and

(v) *Stack test capability.* Packages of consumer commodities must be capable of withstanding, without failure or leakage of any inner packaging and without any significant reduction in effectiveness, a force applied to the top surface for a duration of 24 hours equivalent to the total weight of identical packages if stacked to a height of 3.0 m (including the test sample).

(d) *Consumer commodities.* Until December 31, 2020, a limited quantity package of polyester resin kits that are also consumer commodities as defined in § 171.8 of this subchapter may be renamed "Consumer commodity" and reclassed as ORM–D or, until December 31, 2012, as ORM–D–AIR material and offered for transportation and transported in accordance with the applicable provisions of this subchapter in effect on October 1, 2010.

[78 FR 65481, Oct. 31, 2013]

§ 173.166 Safety devices.

For the purpose of this section, safety devices are articles which contain pyrotechnic substances or hazardous materials of other classes and are used in vehicles, vessels or aircraft to enhance safety to persons. Examples are: air bag inflators, air bag modules, seat-belt pretensioners and pyromechanical devices. Pyromechanical devices are assembled components for tasks such as but not limited to separation, locking, release-and-drive or occupant restraint. The term includes "Safety devices, pyrotechnic."

(a) *Definitions.* An *air bag inflator* (consisting of a casing containing an igniter, a booster material, a gas generant and, in some cases, a pressure receptacle (cylinder)) is a gas generator used to inflate an air bag in a supplemental restraint system in a motor vehicle. An *air bag module* is the air bag inflator plus an inflatable bag assembly. A *seat-belt pretensioner* contains similar hazardous materials and is used in the operation of a seat-belt restraining system in a motor vehicle.

(b) *Classification.* (1) Safety devices, excluding those which contain flammable or toxic gases or mixtures thereof, may be classed as Class 9 (UN3268) if the safety device, or if more than a single safety device is involved then the

ED_001691B_00009240

representative of the maximum parameters of each design type, is examined and successfully tested by a person or agency who is authorized by the Associate Administrator to perform examination and testing of explosives under §173.56(b)(1), and who:

(i) Does not manufacture or market explosives or safety devices, is not owned in whole or in part, or is not financially dependent upon any entity that manufactures or markets explosives or safety devices;

(ii) Performs all examination and testing in accordance with the applicable requirements as specified in special provision 160 (see §172.102 of this subchapter); and

(iii) Maintains records in accordance with paragraph (g) of this section.

(iv) By adhering to all the provisions specified in paragraph (b)(1) of this section, a Class 9 (UN3268) air bag inflator, air bag module or seat-belt pretensioner design is not required to be submitted to the Associate Administrator for approval or assigned an EX number. All other Class 9 (UN3268) safety device designs are required to be submitted to the Associate Administrator for approval and assigned an EX number;

(2) A safety device may be classed as Division 1.4G if the maximum parameters of each design type have been examined and successfully tested by a person or agency who is authorized by the Associate Administrator to perform such examination and testing of explosives under §173.56(b)(1). As a Class 1 explosive, the manufacturer must submit to the Associate Administrator a report of the examination and assignment of a recommended shipping description, division, and compatibility group, and if the Associate Administrator finds the approval request meets the regulatory criteria, the explosive may be approved in writing and assigned an EX number; or

(3) The manufacturer has submitted an application, including a classification issued by the competent authority of a foreign government to the Associate Administrator, and received written notification from the Associate Administrator that the device has been approved for transportation and assigned an EX number.

(c) *EX numbers.* (1) When a safety device is classed and approved as a Division 1.4G and offered for transportation, the shipping paper must contain the EX number or product code for each approved device in association with the basic description required by §172.202(a) of this subchapter. Product codes must be traceable to the specific EX number assigned to the device by the Associate Administrator. Further, if the EX number or product code is contained on the shipping paper then it is not required to be marked on the outside package.

(2) A safety device, when classed as a Class 9 (UN3268), is excepted from the EX number, or product code shipping paper requirements of paragraph (c) of this section.

(d) *Exceptions.* (1) A safety device that is classed as a Class 9 (UN3268) under the terms of paragraph (b)(1) of this section and is installed in a motor vehicle, aircraft, boat or other transport conveyance or its completed components, such as steering columns or door panels, is not subject to the requirements of this subchapter. A safety device that has been classed as a Division 1.4G and approved by the Associate Administrator and is installed in a motor vehicle, aircraft, boat or other transport conveyance or its completed components, such as steering columns or door panels, is not subject to the requirements of this subchapter.

(2) An air bag module containing an inflator that has been previously approved by the Associate Administrator for transportation is not required to be submitted for further examination or approval. For classifications granted after July 30, 2013, if the Class 9 designation for the inflator is contingent upon packaging or other special means specified by the authorized testing agency, the modules must be tested and certified separately to determine if they can be shipped as "UN3268, Safety Devices, 9, PG III".

(3) An air bag module containing an inflator that has previously been approved by the Associate Administrator as a Division 2.2 material is not required to be submitted for further examination to be reclassed as a Class 9 material.

ED_001691B_00009240

(4) *Shipments to recycling or waste disposal facilities.* When offered for domestic transportation by highway, rail freight, cargo vessel or cargo aircraft, a serviceable safety device classed as either Class 9 (UN3268) or Division 1.4G removed from a motor vehicle that was manufactured as required for use in the United States may be offered for transportation and transported without compliance with the shipping paper requirement prescribed in paragraph (c) of this section. However, when these articles are shipped to a recycling facility, the word "Recycled" must be entered on the shipping paper immediately after the basic description prescribed in §172.202 of this subchapter. No more than one device is authorized in the packaging prescribed in paragraph (e)(1), (2) or (3) of this section. The device must be cushioned and secured within the package to prevent movement during transportation.

(5) An air bag inflator, air bag module, or seat-belt pretensioner that was classed and approved for transportation prior to January 1, 2015 may continue to be transported under the terms of the existing approval, using the appropriate proper shipping name "Safety Devices" or "Safety Devices, Pyrotechnic" based on the classification of the device as assigned by PHMSA or the authorized person or agency that examined and tested the design type.

(6) Until January 1, 2016, for domestic transportation by highway, rail, and vessel, packages containing air bag inflators, air bag modules, or seat-belt pretensioners may be;

(i) Marked with either the appropriate proper shipping name, or an appropriate proper shipping name authorized by §172.101 in effect on December 31, 2014; and

(ii) Described on a shipping paper with either the appropriate proper shipping name, or an appropriate proper shipping name authorized by §172.101 in effect on December 31, 2014.

(e) *Packagings.* Rigid, outer packagings, meeting the general packaging requirements of part 173 are authorized as follows. Additionally, the UN specification packagings listed in paragraphs (e)(1), (2), and (3) of this section must meet the packaging specification and performance requirements of part 178 of this subchapter at the Packing Group III performance level. The packagings must be designed and constructed to prevent movement of the articles and inadvertent activation. Further, if the Class 9 designation is contingent upon packaging specified by the authorized testing agency, shipments of the safety device must be in compliance with the prescribed packaging.

(1) 1A2, 1B2, 1N2, 1D, 1G, or 1H2 drums.

(2) 3A2, 3B2, or 3H2 jerricans.

(3) 4A, 4B, 4N, 4C1, 4C2, 4D, 4F, 4G, 4H1, or 4H2 boxes.

(4) *Reusable high-strength containers or dedicated handling devices.* (i) Reusable containers manufactured from high-strength plastic, metal, or other suitable material, or other dedicated handling devices are authorized for shipment of safety devices from a manufacturing facility to the assembly facility, subject to the following conditions:

(A) The gross weight of the containers or handling devices may not exceed 1000 kg (2205 pounds). Containers or handling devices must provide adequate support to allow stacking at least three units high with no resultant damage;

(B) If not completely enclosed by design, the container or handling device must be covered with plastic, fiberboard, metal, or other suitable material. The covering must be secured to the container by banding or other comparable methods; and

(C) Internal dunnage must be sufficient to prevent movement of the devices within the container.

(ii) Reusable containers manufactured from high-strength plastic, metal, or other suitable material, or other dedicated handling devices are authorized for shipment of safety devices only to, between, and from, intermediate handling locations, provided they meet the conditions specified in paragraphs (e)(4)(i)(A) through (C) of this section and:

(A) The packages may be opened and re-packed by an intermediate handler as long as no modifications or changes are made to the packagings; and

(B) Transportation must be made by private or contract carrier.

ED_001691B_00009240

(5) Packagings which were previously authorized in an approval issued by the Associate Administrator may continue to be used, provided a copy of the approval is maintained while such packaging is being used.

(6) *Safety Devices removed from a vehicle.* When removed from, or were intended to be used in, a motor vehicle that was manufactured as required for use in the United States and offered for domestic transportation by highway to Recycling or Waste Disposal facilities, a serviceable safety device classed as Class 9 UN3268 may be offered for transportation and transported in the following additional packaging:

(i) Specification and non-specification steel drums with a wall and lid thickness not less than 20 gauge. The lid must be securely affixed with a lever-locking or bolted-ring assembly. The lid of the drum must provide ventilation of the drum contents in a fire. The drum may be filled with any combination of safety devices to a capacity not greater than fifty (50) percent of the drum's total volume. In addition, inner packagings or cushioning may not be used to fill the void space; or

(ii) Outer packaging consisting of 4H2 solid plastic boxes or non-specification rugged reusable plastic outer packaging and inner static-resistant plastic bags or trays. If not completely enclosed by design, the container or handling device must be covered with plastic, fiberboard, metal or other suitable material. The covering must be secured to the container by banding or other comparable methods. The articles must be packed to prevent movement within the container during transportation.

(f) *Labeling.* Notwithstanding the provisions of §172.402, each package or handling device must display a CLASS 9 label. Additional labeling is not required when the package contains no hazardous materials other than the devices.

(g) *Recordkeeping requirements.* (1) Following the examination of each new design type classed as a Class 9 in accordance with paragraph (b)(1) of this section, the person that conducted the examination must prepare a test report and provide the test report to the manufacturer of the safety device. At a minimum, the test report must contain the following information:

(i) Name and address of the test facility;

(ii) Name and address of the applicant;

(iii) Manufacturer of the device. For a foreign manufacturer, the U.S. agent or importer must be identified;

(iv) A test report number, drawing of the device, and description of the safety device in sufficient detail to ensure that the test report is traceable (*e.g.* a unique product identifier) to a specific design;

(v) The tests conducted and the results; and

(vi) A certification that the safety device is classed as a Class 9 (UN3268).

(2) For at least fifteen (15) years after testing, a copy of each test report must be maintained by the authorizing testing agency. For as long as any safety device design is being manufactured, and for at least fifteen (15) years thereafter, a copy of each test report must be maintained by the manufacturer of the product.

(3) Test reports must be made available to a representative of the Department upon request.

[80 FR 1157, Jan. 8, 2015]

§ 173.167 Consumer commodities.

(a) Effective January 1, 2013, a "consumer commodity" (see §171.8 of this subchapter) when offered for transportation by aircraft may only include articles or substances of Class 2 (nontoxic aerosols only), Class 3 (Packing Group II and III only), Division 6.1 (Packing Group III only), UN3077, UN3082, UN3175, UN3334, and UN3335, provided such materials do not have a subsidiary risk and are authorized aboard a passenger-carrying aircraft. Consumer commodities are excepted from the specification outer packaging requirements of this subchapter. Packages prepared under the requirements of this section are excepted from labeling and shipping papers when transported by highway or rail. Except as indicated in §173.24(i), each completed package must conform to §§173.24 and 173.24a of this subchapter. Additionally, except for the pressure differential requirements in §173.27(c), the requirements of §173.27 do not apply to

ED_001691B_00009240

packages prepared in accordance with this section. Packages prepared under the requirements of this section may be offered for transportation and transported by all modes. As applicable, the following apply:

(1) *Inner and outer packaging quantity limits.* (i) Non-toxic aerosols, as defined in §171.8 of this subchapter and constructed in accordance with §173.306 of this part, in non-refillable, non-metal containers not exceeding 120 mL (4 fluid ounces) each, or in non-refillable metal containers not exceeding 820 mL (28 ounces) each, except that flammable aerosols may not exceed 500 mL (16.9 ounces) each;

(ii) Liquids, in inner packagings not exceeding 500 mL (16.9 ounces) each. Liquids must not completely fill an inner packaging at 55 °C;

(iii) Solids, in inner packagings not exceeding 500 g (1.0 pounds) each; or

(iv) Any combination thereof not to exceed 30 kg (66 pounds) gross weight as prepared for shipment.

(2) *Closures.* Friction-type closures must be secured by positive means. The body and closure of any packaging must be constructed so as to be able to adequately resist the effects of temperature and vibration occurring in conditions normally incident to air transportation. The closure device must be so designed that it is unlikely that it can be incorrectly or incompletely closed.

(3) *Absorbent material.* Inner packagings must be tightly packaged in strong outer packagings. Absorbent and cushioning material must not react dangerously with the contents of inner packagings. Glass or earthenware inner packagings containing liquids of Class 3 or Division 6.1, sufficient absorbent material must be provided to absorb the entire contents of the largest inner packaging contained in the outer packaging. Absorbent material is not required if the glass or earthenware inner packagings are sufficiently protected as packaged for transport that it is unlikely a failure would occur and, if a failure did occur, that it would be unlikely that the contents would leak from the outer packaging.

(4) *Drop test capability.* Breakable inner packagings (*e.g.*, glass, earthenware, or brittle plastic) must be packaged to prevent failure under conditions normally incident to transport. Packages of consumer commodities as prepared for transport must be capable of withstanding a 1.2 m drop on solid concrete in the position most likely to cause damage. In order to pass the test, the outer packaging must not exhibit any damage liable to affect safety during transport and there must be no leakage from the inner packaging(s).

(5) *Stack test capability.* Packages of consumer commodities must be capable of withstanding, without failure or leakage of any inner packaging and without any significant reduction in effectiveness, a force applied to the top surface for a duration of 24 hours equivalent to the total weight of identical packages if stacked to a height of 3.0 m (including the test sample).

(b) When offered for transportation by aircraft:

(1) Packages prepared under the requirements of this section are to be marked as a limited quantity in accordance with §172.315(b)(1) and labeled as a Class 9 article or substance, as appropriate, in accordance with subpart E of part 172 of this subchapter; and

(2) Pressure differential capability: Except for UN3082, inner packagings intended to contain liquids must be capable of meeting the pressure differential requirements (75 kPa) prescribed in §173.27(c) of this part. The capability of a packaging to withstand an internal pressure without leakage that produces the specified pressure differential should be determined by successfully testing design samples or prototypes.

[78 FR 1115, Jan. 7, 2013, as amended at 78 FR 65482, Oct. 31, 2013; 80 FR 1159, Jan. 8, 2015]

§ 173.168 Chemical oxygen generators.

An oxygen generator, chemical (defined in §171.8 of this subchapter) may be transported only under the following conditions:

(a) *Approval.* A chemical oxygen generator that is shipped with an explosive or non-explosive means of initiation attached must be classed and approved by the Associate Administrator in accordance with the procedures specified in §173.56 of this subchapter.

(b) *Impact resistance.* A chemical oxygen generator, without any packaging, must be capable of withstanding a 1.8

ED_001691B_00009240

meter drop onto a rigid, non-resilient, flat and horizontal surface, in the position most likely to cause actuation or loss of contents.

(c) *Protection against inadvertent actuation.* A chemical oxygen generator must incorporate one of the following means of preventing inadvertent actuation:

(1) A chemical oxygen generator that is not installed in protective breathing equipment (PBE):

(i) Mechanically actuated devices:

(A) Two pins, installed so that each is independently capable of preventing the actuator from striking the primer;

(B) One pin and one retaining ring, each installed so that each is independently capable of preventing the actuator from striking the primer; or

(C) A cover securely installed over the primer and a pin installed so as to prevent the actuator from striking the primer and cover.

(ii) Electrically actuated devices: The electrical leads must be mechanically shorted and the mechanical short must be shielded in metal foil.

(iii) Devices with a primer but no actuator: A chemical oxygen generator that has a primer but no actuating mechanism must have a protective cover over the primer to prevent actuation from external impact.

(2) A chemical oxygen generator installed in a PBE must contain a pin installed so as to prevent the actuator from striking the primer, and be placed in a protective bag, pouch, case or cover such that the protective breathing equipment is fully enclosed in such a manner that the protective bag, pouch, case or cover prevents unintentional actuation of the oxygen generator.

(d) *Packaging.* A chemical oxygen generator and a chemical oxygen generator installed in equipment, (e.g., a PBE) must be placed in a rigid outer packaging that—

(1) Conforms to the requirements of either:

(i) Part 178, subparts L and M, of this subchapter at the Packing Group I or II performance level; or

(ii) The performance criteria in Air Transport Association (ATA) Specification No. 300 for a Category I Shipping Container.

(2) With its contents, is capable of meeting the following additional requirements when transported by cargo-only aircraft:

(i) The Flame Penetration Resistance Test specified in appendix E to part 178 of this subchapter.

(ii) The Thermal Resistance Test specified in appendix D to part 178 of this subchapter.

(e) *Equipment marking.* The outside surface of a chemical oxygen generator must be marked to indicate the presence of an oxygen generator (e.g., "oxygen generator, chemical"). The outside surface of equipment containing a chemical oxygen generator that is not readily apparent (e.g., a sealed passenger service unit) must be clearly marked to indicate the presence of the oxygen generator (example: "Oxygen Generator Inside").

(f) *Items forbidden in air transportation.* (1) A chemical oxygen generator is forbidden for transportation on board a passenger-carrying aircraft.

(2) A chemical oxygen generator is forbidden for transportation by both passenger-carrying and cargo-only aircraft after:

(i) The manufacturer's expiration date; or

(ii) The contents of the generator have been expended.

[72 FR 4455, Jan. 31, 2007, as amended at 72 FR 55097, Sept. 28, 2007; 74 FR 2259, Jan. 14, 2009; 74 FR 53188, Oct. 16, 2009; 76 FR 56316, Sept. 13, 2011]

§ 173.170 Black powder for small arms.

Black powder for small arms that has been classed in Division 1.1 may be reclassed as a Division 4.1 material, for domestic transportation by motor vehicle, rail freight, and cargo vessel only, subject to the following conditions:

(a) The powder must be examined and approved for Division 1.1 and Division 4.1 classification in accordance with §§ 173.56 and 173.58;

(b) The total quantity of black powder in one motor vehicle, rail car, or freight container may not exceed 45.4 kg (100 pounds) net mass, and no more than four freight containers may be on board one cargo vessel;

ED_001691B_00009240

(c) The black powder must be packed in inner metal or heavy wall conductive plastic receptacles not over 454 g (16 ounces) net capacity each, with no more than 25 cans in one outer UN 4G fiberboard box. The inner packagings must be arranged and protected so as to prevent simultaneous ignition of the contents. The complete package must be of the same type which has been examined as required in § 173.56;

(d) Each completed package must be marked "BLACK POWDER FOR SMALL ARMS" and "NA 0027"; and

(e) Each package must bear the FLAMMABLE SOLID label.

[Amdt. 173–255, 61 FR 50626, Sept. 26, 1996, as amended at Amdt. 173–255, 62 FR 14338, Mar. 26, 1997]

§ 173.171 Smokeless powder for small arms.

Smokeless powder for small arms which has been classed in Division 1.3 or Division 1.4 may be reclassed in Division 4.1, for domestic transportation by motor vehicle, rail car, vessel, or cargo-only aircraft, subject to the following conditions:

(a) Powders that have been approved as Division 1.3C or Division 1.4C may be reclassed to Division 4.1 in accordance with §§ 173.56 and 173.58 of this part.

(b) The total quantity of smokeless powder may not exceed 45.4 kg (100 pounds) net mass in:

(1) One rail car, motor vehicle, or cargo-only aircraft; or

(2) One freight container on a vessel, not to exceed four freight containers per vessel.

(c) Only combination packagings with inner packagings not exceeding 3.6 kg (8 pounds) net mass are authorized. Inner packagings must be arranged and protected so as to prevent simultaneous ignition of the contents. The complete package must be of the same type which has been examined as required in § 173.56 of this part.

(d) Inside packages that have been examined and approved by the Associate Administrator may be packaged in UN 4G fiberboard boxes meeting the Packing Group I performance level, provided all inside containers are packed to prevent shifting and the net weight of smokeless powder in any one box does not exceed 7.3 kg (16 pounds).

[Amdt. 173–224, 55 FR 52643, Dec. 21, 1990, as amended at 56 FR 66270, Dec. 20, 1991; Amdt. 173–241, 59 FR 67509, Dec. 29, 1994; Amdt. 173–253, 61 FR 27174, May 30, 1996; 66 FR 45379, Aug. 28, 2001; 68 FR 61941, Oct. 30, 2003; 75 FR 53597, Sept. 1, 2010; 78 FR 14714, Mar. 7, 2013; 78 FR 65482, Oct. 31, 2013]

§ 173.172 Aircraft hydraulic power unit fuel tank.

Aircraft hydraulic power unit fuel tanks containing a mixture of anhydrous hydrazine and monomethyl hydrazine (M86 fuel) and designed for installation as complete units in aircraft are excepted from the specification packaging requirements of this subchapter when they conform to either of the following conditions:

(a) The unit must consist of an aluminum pressure vessel made from tubing and having welded heads. Primary containment of the fuel within this vessel must consist of a welded aluminum bladder having a maximum internal volume of 46 L (12 gallons). The outer vessel must have a minimum design gauge pressure of 1,275 kPa (185 psig) and a minimum burst gauge pressure of 2,755 kPa (400 psig). Each vessel must be leak-checked during manufacture and before shipment and must be found leakproof. The complete inner unit must be securely packed in noncombustible cushioning material, such as vermiculite, in a strong outer tightly closed metal packaging which will adequately protect all fittings. Maximum quantity of fuel per unit and package is 42 L (11 gallons); or

(b) The unit must consist of an aluminum pressure vessel. Primary containment of the fuel within this vessel must consist of a welded hermetically sealed fuel compartment with an elastomeric bladder having a maximum internal volume of 46 L (12 gallons). The pressure vessel must have a minimum design gauge pressure of 5,170 kPa (750 psig). Each vessel must be leak-checked during manufacture and before shipment and must be securely packed in non-combustible cushioning material, such as vermiculite, in a strong outer tightly closed metal packaging

ED_001691B_00009240

which will adequately protect all fittings. Maximum quantity of fuel per unit and package is 42 L (11 gallons).

[Amdt. 173–224, 55 FR 52643, Dec. 21, 1990, as amended by 66 FR 45380]

§ 173.173 Paint, paint-related material, adhesives, ink and resins.

(a) When the § 172.101 table specifies that a hazardous material be packaged under this section, the following requirements apply. Except as otherwise provided in this part, the description "Paint" is the proper shipping name for paint, lacquer, enamel, stain, shellac, varnish, liquid aluminum, liquid bronze, liquid gold, liquid wood filler, and liquid lacquer base. The description "Paint-related material" is the proper shipping name for a paint thinning, drying, reducing or removing compound. However, if a more specific description is listed in the § 172.101 table of this subchapter, that description must be used.

(b) Paint, paint-related material, adhesives, ink and resins must be packaged as follows:

(1) As prescribed in § 173.202 of this part if it is a Packing Group II material or § 173.203 of this part if it is a Packing Group III material; or

(2) In inner glass packagings of not over 1 L (0.3 gallon) capacity each or inner metal packagings of not over 5 L (1 gallon) each, packed in a strong outer packaging. Packages must conform to the packaging requirements of subpart B of this part but need not conform to the requirements of part 178 of this subchapter.

[Amdt. 173–224, 55 FR 52643, Dec. 21, 1990, as amended at 56 FR 66270, Dec. 20, 1991; Amdt. 173–241, 59 FR 67509, Dec. 29, 1994]

§ 173.174 Refrigerating machines.

A refrigerating machine assembled for shipment and containing 7 kg (15 pounds) or less of a flammable liquid for its operation in a strong, tight receptacle is excepted from labeling (except when offered for transportation or transported by air) and the specification packaging requirements of this subchapter. In addition, shipments are not subject to subpart F of part 172 of this subchapter (Placarding), to part 174 of this subchapter (Carriage by rail) except § 174.24 (Shipping papers) and to part 177 (Carriage by highway) of this subchapter except § 177.817 (Shipping papers).

§ 173.175 Permeation devices.

Permeation devices that contain hazardous materials and that are used for calibrating air quality monitoring devices are not subject to the requirements of this subchapter provided the following requirements are met:

(a) Each device must be constructed of a material compatible with the hazardous materials it contains;

(b) The total contents of hazardous materials in each device is limited to 2 ml (0.07 ounces) and the device must not be liquid full at 55 °C (131 °F);

(c) Each permeation device must be placed in a sealed, high impact resistant, tubular inner packaging of plastic or equivalent material. Sufficient absorbent material must be contained in the inner packaging to completely absorb the contents of the device. The closure of the inner packaging must be securely held in place with wire, tape or other positive means;

(d) Each inner packaging must be contained in a secondary packaging constructed of metal, or plastic having a minimum thickness of 1.5 mm (0.06 inches). The secondary packaging must be hermetically sealed;

(e) The secondary packaging must be securely packed in strong outer packaging. The completed package must be capable of withstanding, without breakage or leakage of any inner packaging and without significant reduction in effectiveness:

(1) The following free drops onto a rigid, non resilient, flat and horizontal surface from a height of 1.8 m (5.9 feet):

(i) One drop flat on the bottom;

(ii) One drop flat on the top;

(iii) One drop flat on the long side;

(iv) One drop flat on the short side;

(v) One drop on a corner at the junction of three intersecting edges; and

(2) A force applied to the top surface for a duration of 24 hours, equivalent to the total weight of identical packages if stacked to a height of 3 m (10 feet) (including the test sample).

(3) Each of the above tests may be performed on different but identical packages.

ED_001691B_00009240

(f) The gross mass of the completed package must not exceed 30 kg.

(g) For transportation by aircraft, permeation devices must be transported as cargo and may not be carried onboard an aircraft by passengers or crewmembers in carry-on baggage, checked baggage, or on their person unless specifically excepted by § 175.10.

[76 FR 43530, July 20, 2011, as amended at 78 FR 1087, Jan. 7, 2013]

§ 173.176 Capacitors.

(a) Capacitors, including capacitors containing an electrolyte that does not meet the definition of any hazard class or division as defined in this part, must conform to the following requirements:

(1) Except for asymmetric capacitors, capacitors not installed in equipment must be transported in an uncharged state.

(2) Each capacitor or module must be protected against a potential short circuit hazard in transport as follows:

(i) Except for asymmetric capacitors, when a capacitor's energy storage capacity is less than or equal to 10 Wh or when the energy storage capacity of each capacitor in a module is less than or equal to 10 Wh, the capacitor or module must be protected against short circuit or be fitted with a metal strap connecting the terminals; or

(ii) Except for asymmetric capacitors, when the energy storage capacity of a capacitor or a capacitor in a module is more than 10 Wh, the capacitor or module must be fitted with a metal strap connecting the terminals.

(iii) When an asymmetric capacitor's energy storage capacity is greater than 0.3 Wh, or when the energy storage capacity of each capacitor in a module is greater than 0.3 Wh, the capacitor or module must be protected against short circuit.

(3) Capacitors containing an electrolyte that meets the definition of one or more hazard class or division as defined in this part, must be designed to withstand a 95 kPa (0.95 bar, 14 psi) pressure differential.

(4) Capacitors must be designed and constructed to safely relieve pressure that may build up in use, through a vent or a weak point in the capacitor casing. Any liquid that is released upon venting must be contained by the packaging or by the equipment in which a capacitor is installed.

(5) Except for asymmetric capacitors, capacitors manufactured after December 31, 2013, or asymmetric capacitors manufactured after December 31, 2015, must be marked with the energy storage capacity in Wh.

(b) Capacitors must be packed in strong outer packagings. For transport by air, capacitors must be securely cushioned within the outer packagings. Capacitors installed in equipment may be offered for transport unpackaged or on pallets, when the capacitors are afforded equivalent protection by the equipment in which they are contained.

(c) Capacitors containing an electrolyte not meeting the definition of any hazard class or division as defined in this part, including when configured in a module or when installed in equipment, are not subject to any other requirements of this subchapter.

(d) Except for asymmetric capacitors, capacitors containing an electrolyte that meets the definition of one or more hazard class or division as defined in this part, with an energy storage capacity of 10 Wh or less are not subject to any other requirements of this subchapter, when they are capable of withstanding a 1.2 m (3.9 feet) drop test unpackaged onto a rigid, non-resilient, flat and horizontal surface without loss of contents.

(e) Asymmetric capacitors containing an electrolyte that meets the definition of one or more hazard class or division as defined in this part, with an energy storage capacity of 20 Wh or less, including when configured in a module, are not subject to other provisions of this subchapter when the capacitors are capable of withstanding a 1.2 meter (3.9 feet) drop test unpackaged onto a rigid, non-resilient, flat and horizontal surface without loss of contents.

(f) Except for asymmetric capacitors, capacitors containing an electrolyte meeting the definition of one or more hazard class or division as defined in this part, that are not installed in equipment, and with an energy storage capacity of more than 10 Wh are subject to the requirements of this subchapter.

ED_001691B_00009240

(g) Asymmetric capacitors containing an electrolyte meeting the definition of one or more hazard class or division as defined in this part, that are not installed in equipment, and with an energy storage capacity of more than 20 Wh are to the requirements of this subchapter.

(h) Capacitors installed in equipment and containing an electrolyte meeting the definition of one or more hazard class or division as defined in this part, are not subject to any other requirements of this subchapter, provided the equipment is packaged in a strong outer packaging and in such a manner as to prevent accidental functioning of the capacitors during transport. Large, robust equipment containing capacitors may be offered for transport unpackaged or on pallets when the capacitors are afforded equivalent protection by the equipment in which they are contained.

[80 FR 1159, Jan. 8, 2015]

§ 173.181 Pyrophoric materials (liquids).

When the § 172.101 table specifies that a hazardous material be packaged under this section, only the following non-bulk packagings are authorized:

(a) Specification steel or nickel cylinders prescribed for any compressed gas except acetylene having a minimum design pressure of 1206 kPa (175 psig). Cylinders with valves must be:

(1) Equipped with steel valve protection caps or collars, unless overpacked; or

(2) Overpacked in a wooden box (4C1, 4C2, 4D or 4F); fiberboard box (4G), or plastic box (4H1 or 4H2). Cylinders must be secured to prevent shifting in the box and, when offered for transportation or transported, must be so loaded that pressure relief devices remain in the vapor space of the cylinder. (See § 177.838(h) of this subchapter.)

(b) Steel boxes (4A), aluminum boxes (4B), metal boxes, other than steel or aluminum (4N), wooden boxes (4C1, 4C2, 4D, or 4F) or fiberboard boxes (4G); steel drums (1A1 or 1A2), aluminum drums (1B1 or 1B2), metal drums, other than steel or aluminum (1N1 or 1N2), plywood drums (1D), or fiber drums (1G); or steel jerricans (3A1 or 3A2) or aluminum jerricans (3B1 or 3B2) enclosing not more than four strong, tight metal cans with inner receptacles of glass or metal, not over 1 L (0.3 gallon) capacity each, having positive screwcap closures adequately gasketed. Inner packagings must be cushioned on all sides with dry, absorbent, incombustible material in a quantity sufficient to absorb the entire contents. The strong, tight metal cans must be closed by positive means, not by friction.

(c) Steel drums (1A1 or 1A2), aluminum drums (1B1 or 1B2), metal drums, other than steel or aluminum (1N1 or 1N2) or fiber drums (1G); steel jerricans (3A1 or 3A2) or aluminum jerricans (3B1 or 3B2); or steel boxes (4A), aluminum boxes (4B) or metal boxes, other than steel or aluminum (4N) not exceeding 220 L (58 gallons) capacity each with strong, tight inner metal cans not over 4.0 L (1 gallon) capacity each. The strong, tight metal cans must be closed by positive means, not friction.

(1) Inner packagings must have no opening exceeding 25 mm (1 inch) diameter and must be surrounded with noncombustible cushioning material.

(2) Net quantity of pyrophoric liquids may not exceed two-thirds of the rated capacity of the outer drum. For example, a 220 L (58 gallons) outer drum may contain no more than 147 L (39 gallons) of pyrophoric liquids.

(3) Each layer of inner containers must be separated by a metal plate separator in addition to cushioning material.

[Amdt. 173–224, 55 FR 52643, Dec. 21, 1990, as amended at 56 FR 66270, Dec. 20, 1991; 65 FR 58629, Sept. 29, 2000; 66 FR 45183, 45380, Aug. 28, 2001; 68 FR 24660, May 8, 2003; 68 FR 61941, Oct. 30, 2003; 78 FR 1087, Jan. 7, 2013; 80 FR 1159, Jan. 8, 2015]

§ 173.182 Barium azide—50 percent or more water wet.

Barium azide—50 percent or more water wet, must be packed in wooden boxes (4C1, 4C2, 4D, or 4F) or fiber drums (1G) with inner glass packagings not over 0.5 kg (1.1 pounds) capacity each. Packagings must have rubber stoppers wire tied for securement. If transportation is to take place when and where freezing weather is possible, a suitable antifreeze solution must be

ED_001691B_00009240

used to prevent freezing. Each packaging must conform to the requirements of part 178 of this subchapter at the Packing Group I performance level.

§ 173.183 Nitrocellulose base film.

Films, nitrocellulose base, must be packaged in packagings conforming to the requirements of part 178 of this subchapter at the Packing Group III performance level, as follows:

(a) In steel drums (1A2), aluminum drums (1B2), other metal drums (4A2), steel jerricans (3A2), aluminum jerricans (3B2), steel, aluminum or other metal (4A, 4B, 4N) boxes, wooden (4C1, 4C2), plywood (4D) or reconstituted wood (4F) boxes or plywood drums (1D) with each reel in a tightly closed metal can, polypropylene canister, or strong cardboard or fiberboard inner packaging with cover held in place by adhesive tape or paper; or

(b) In fiberboard (4G) boxes or fiber drums (1G) with a single tightly closed metal can, polypropylene canister, or strong cardboard or fiberboard inner packaging with cover held in place by adhesive tape or paper; authorized only for not over 600 m (1969 feet) of film.

[Amdt. 173–224, 55 FR 52643 Dec. 21, 1990, as amended by Amdt. 173–255, 61 FR 50627, Sept. 26, 1996; 78 FR 1087, Jan. 7, 2013]

§ 173.184 Highway or rail fusee.

(a) A fusee is a device designed to burn at a controlled rate and to produce visual effects for signaling purposes. The composition of the fusee must be such that the fusee will not ignite spontaneously or undergo marked decomposition when subjected to a temperature of 75 °C (167 °F) for 48 consecutive hours.

(b) Fusees (highway and railway) must be packaged in steel (1A2), aluminum (1B2) or other metal (1N2) drums, steel (3A2) or aluminum (3B2) jerricans, steel (4A), aluminum (4B) or other metal (4N) boxes, wooden (4C1, 4C2), plywood (4D) or reconstituted wood (4F) boxes or in fiberboard boxes (4G), plywood (1D) or fiber (1G) drums. If the fusees are equipped with spikes packagings must have reinforced ends to prevent penetration of spikes through the outer packagings; packages must be capable of passing drop test requirements (§178.603 of this subchapter), including at least one drop with spike in a downward position, and other requirements of part 178 of this subchapter, at the Packing Group II performance level.

[Amdt. 173–224, 55 FR 52643, Dec. 21, 1990, as amended at 66 FR 45379; 78 FR 1088, Jan. 7, 2013]

§ 173.185 Lithium cells and batteries.

As used in this section, *lithium cell(s) or battery(ies)* includes both lithium metal and lithium ion chemistries. *Equipment* means the device or apparatus for which the lithium cells or batteries will provide electrical power for its operation.

(a) *Classification.* (1) Each lithium cell or battery must be of the type proven to meet the criteria in Part III, subsection 38.3 of the UN Manual of Tests and Criteria (IBR; see §171.7 of this subchapter). Lithium cells and batteries are subject to these tests regardless of whether the cells used to construct the battery are of a tested type.

(i) Cells and batteries manufactured according to a type meeting the requirements of sub-section 38.3 of the UN Manual of Tests and Criteria, Revision 3, Amendment 1 or any subsequent revision and amendment applicable at the date of the type testing may continue to be transported, unless otherwise provided in this subchapter.

(ii) Cell and battery types only meeting the requirements of the UN Manual of Tests and Criteria, Revision 3, are no longer valid. However, cells and batteries manufactured in conformity with such types before July 2003 may continue to be transported if all other applicable requirements are fulfilled.

(2) Each person who manufactures lithium cells or batteries must create a record of satisfactory completion of the testing required by this paragraph prior to offering the lithium cell or battery for transport and must:

(i) Maintain this record for as long as that design is offered for transportation and for one year thereafter; and

(ii) Make this record available to an authorized representative of the Federal, state or local government upon request.

(3) Except for cells or batteries meeting the requirements of paragraph (c)

ED_001691B_00009240

of this section, each lithium cell or battery must:

(i) Incorporate a safety venting device or be designed to preclude a violent rupture under conditions normally incident to transport;

(ii) Be equipped with effective means of preventing external short circuits; and

(iii) Be equipped with an effective means of preventing dangerous reverse current flow (e.g., diodes or fuses) if a battery contains cells, or a series of cells that are connected in parallel.

(b) *Packaging.* (1) Each package offered for transportation containing lithium cells or batteries, including lithium cells or batteries packed with, or contained in, equipment, must meet all applicable requirements of subpart B of this part.

(2) Lithium cells or batteries, including lithium cells or batteries packed with, or contained in, equipment, must be packaged in a manner to prevent:

(i) Short circuits;

(ii) Movement within the outer package; and

(iii) Accidental activation of the equipment.

(3) For packages containing lithium cells or batteries offered for transportation:

(i) The lithium cells or batteries must be placed in non-metallic inner packagings that completely enclose the cells or batteries, and separate the cells or batteries from contact with equipment, other devices, or conductive materials (e.g., metal) in the packaging.

(ii) The inner packagings containing lithium cells or batteries must be placed in one of the following packagings meeting the requirements of part 178, subparts L and M, of this subchapter at the Packing Group II level:

(A) Metal (4A, 4B, 4N), wooden (4C1, 4C2, 4D, 4F), fiberboard (4G), or solid plastic (4H1, 4H2) box;

(B) Metal (1A2, 1B2, 1N2), plywood (1D), fiber (1G), or plastic (1H2) drum;

(C) Metal (3A2, 3B2) or plastic (3H2) jerrican.

(iii) When packed with equipment lithium cells or batteries must:

(A) Be placed in inner packagings that completely enclose the cell or battery, then placed in an outer packaging. The completed package for the cells or batteries must meet the Packing Group II performance requirements as specified in paragraph (b)(3)(ii) of this section; or

(B) Be placed in inner packagings that completely enclose the cell or battery, then placed with equipment in a package that meets the Packing Group II performance requirements as specified in paragraph (b)(3)(ii) of this section.

(4) When lithium cells or batteries are contained in equipment:

(i) The outer packaging must be constructed of suitable material of adequate strength and design in relation to the capacity and intended use of the packaging, unless the lithium cells or batteries are afforded equivalent protection by the equipment in which they are contained;

(ii) Equipment must be secured against movement within the outer packaging and be packed so as to prevent accidental operation during transport; and

(iii) Any spare lithium ion cells or batteries packed with the equipment must be packaged in accordance with paragraph (b)(3) of this section.

(5) Lithium batteries that weigh 12 kg (26.5 pounds) or more and have a strong, impact-resistant outer casing and assemblies of such batteries, may be packed in strong outer packagings; in protective enclosures (for example, in fully enclosed or wooden slatted crates); or on pallets or other handling devices, instead of packages meeting the UN performance packaging requirements in paragraphs (b)(3)(ii) and (b)(4) of this section. Batteries or battery assemblies must be secured to prevent inadvertent movement, and the terminals may not support the weight of other superimposed elements. Batteries or battery assemblies packaged in accordance with this paragraph are not permitted for transportation by passenger-carrying aircraft, and may be transported by cargo aircraft only if approved by the Associate Administrator.

(6) Except for transportation by aircraft, the following rigid large packagings are authorized for a single battery, including for a battery contained in equipment, meeting provisions (b)(1)

ED_001691B_00009240

and (2) of this section and the requirements of part 178, subparts P and Q, of this subchapter at the Packing Group II level:

(i) Metal (50A, 50B, 50N);

(ii) Rigid plastic (50H);

(iii) Wooden (50C, 50D, 50F);

(iv) Rigid fiberboard (50G).

(c) *Exceptions for smaller cells or batteries.* Other than as specifically stated below, a package containing lithium cells or batteries, or lithium cells or batteries packed with, or contained in, equipment, that meets the conditions of this paragraph, is excepted from the requirements in subparts C through H of part 172 of this subchapter and the UN performance packaging requirements in paragraphs (b)(3)(ii) and (b)(4) of this section under the following conditions and limitations.

(1) *Size limits:*

(i) The Watt-hour rating may not exceed 20 Wh for a lithium ion cell or 100 Wh for a lithium ion battery. After December 31, 2015, each lithium ion battery subject to this provision must be marked with the Watt-hour rating on the outside case.

(ii) The lithium content may not exceed 1 g for a lithium metal cell or 2 g for a lithium metal battery.

(iii) Except when lithium metal cells or batteries are packed with or contained in equipment in quantities not exceeding 5 kg net weight, the outer package that contains lithium metal cells or batteries must be marked: "PRIMARY LITHIUM BATTERIES—FORBIDDEN FOR TRANSPORT ABOARD PASSENGER AIRCRAFT" or "LITHIUM METAL BATTERIES—FORBIDDEN FOR TRANSPORT ABOARD PASSENGER AIRCRAFT, or labeled with a CARGO AIRCRAFT ONLY" label specified in § 172.448 of this subchapter.

(iv) For transportation by highway or rail only, the lithium content of the cell and battery may be increased to 5 g for a lithium metal cell and 25 g for a lithium metal battery and 60 Wh for a lithium ion cell or 300 Wh for a lithium ion battery provided the outer package is marked: "LITHIUM BATTERIES—FORBIDDEN FOR TRANSPORT ABOARD AIRCRAFT AND VESSEL."

(v) The marking specified in paragraphs (c)(1)(ii) and (c)(1)(iii) of this section must have a background of contrasting color, and the letters in the marking must be:

(A) At least 6 mm (0.25 inch) on packages having a gross weight of 30 kg (66 pounds) or less, except that smaller font may be used as necessary when package dimensions so require.

(B) At least 12 mm (0.5 inch) in height on packages having a gross weight of more than 30 kg (66 pounds).

(vi) Except when lithium cells or batteries are packed with, or contained in, equipment, each package must not exceed 30 kg (66 pounds) gross weight.

(2) *Packaging.* Except when lithium cells or batteries are contained in equipment, each package must be capable of withstanding a 1.2 meter drop test, in any orientation, without damage to the cells or batteries contained in the package, without shifting of the contents that would allow battery-to-battery (or cell-to-cell) contact, and without release of the contents of the package.

(3) *Hazard communication.* Except for a package containing button cell batteries installed in equipment (including circuit boards), or no more than four lithium cells or two lithium batteries installed in the equipment:

(i) The outer package must be marked with:

(A) An indication that the package contains "lithium metal" or "lithium ion" cells or batteries, as appropriate;

(B) An indication that the package is to be handled with care and that a flammable hazard exits if the package is damaged;

(C) An indication that special procedures must be followed in the event the package is damaged, to include inspection and repacking if necessary;

(D) A telephone number for additional information.

(ii) Each shipment of one or more packages marked in accordance with this paragraph must be accompanied by a document that includes the following:

(A) An indication that the package contains "lithium metal" or "lithium ion" cells or batteries, as appropriate;

(B) An indication that the package is to be handled with care and that a

ED_001691B_00009240

flammable hazard exits if the package is damaged;

(C) An indication that special procedures must be followed in the event the package is damaged, to include inspection and repacking if necessary; and

(D) A telephone number for additional information.

(4) *Air transportation.* For transportation by aircraft, lithium cells and batteries may not exceed the limits in the following table. The limits on the maximum number of batteries and maximum net quantity of batteries in the following table may not be combined in the same package:

Contents	Lithium metal cells and/or batteries with a lithium content not more than 0.3 g	Lithium metal cells with a lithium content more than 0.3 g but not more than 1 g	Lithium metal batteries with a lithium content more than 0.3 g but not more than 2 g	Lithium ion cells and/or batteries with a Watt-hour rating not more than 2.7 Wh	Lithium ion cells with a Watt-hour rating more than 2.7 Wh but not more than 20 Wh	Lithium ion batteries with a Watt-hour rating more than 2.7 Wh but not more than 100 Wh
Maximum number of cells/batteries per package.	No Limit	8 cells	2 batteries	No Limit	8 cells	2 batteries.
Maximum net quantity (mass) per package.	2.5 kg	n/a	n/a	2.5 kg	n/a	n/a.

(i) The outer package must be durably and legibly marked with the following handling marking, which is durable, legible and displayed on a background of contrasting color:

(A) The marking must be not less than 120 mm (4.7 inches) wide by 110 mm (4.3 inches) high except markings of 105 mm (4.1 inches) wide by 74 mm (2.9 inches) high may be used on a package containing lithium batteries when the package is too small for the larger marking;

(B) The symbols and letters must be black and the border must be red;

(C) The ''*'' must be replaced by ''lithium ion battery'' and/or ''Lithium metal battery'' as appropriate and the ''xxx-xxx-xxxx'' must be replaced by a telephone number for additional information; and

ED_001691B_00009240

(D) When packages required to bear the handling marking are placed in an overpack, the handling marking must either be clearly visible through the overpack, or the handling marking must also be affixed on the outside of the overpack, and the overpack must be marked with the word "Overpack".

(ii) Each shipment with packages required to bear the handling marking must include an indication the shipment contains "lithium ion batteries" or "lithium metal batteries," as appropriate, and when an air waybill is used, an indication on the air waybill of compliance with this paragraph (c)(4) (or the applicable ICAO Packing Instruction).

(iii) For lithium batteries packed with, or contained in, equipment, the number of batteries in each package is limited to the minimum number required to power the piece of equipment, plus two spares, and the total net quantity (mass) of the lithium cells or batteries in the completed package must not exceed 5 kg.

(iv) Each person who prepares a package for transport containing lithium cells or batteries, including cells or batteries packed with, or contained in, equipment in accordance with the conditions and limitations in this paragraph, must receive adequate instruction on these conditions and limitations, commensurate with their responsibilities.

(v) A package that exceeds the number or quantity (mass) limits in the table shown in (c)(4) is subject to all applicable requirements of this subchapter, except that a package containing no more than 2.5 kg lithium metal cells or batteries or 10 kg lithium ion cells or batteries is not subject to the UN performance packaging requirements in paragraphs (b)(3)(ii) of this section when the package displays both the lithium battery handling mark and the Class 9 label.

(d) *Lithium cells or batteries shipped for disposal or recycling.* A lithium cell or battery, including a lithium cell or battery contained in equipment, that is transported by motor vehicle to a permitted storage facility or disposal site, or for purposes of recycling, is excepted from the testing and record keeping requirements of paragraph (a) and the specification packaging requirements of paragraph (b)(3) of this section, when packed in a strong outer packaging conforming to the requirements of §§ 173.24 and 173.24a. A lithium cell or battery that meets the size, packaging, and hazard communication conditions in paragraph (c)(1)–(3) of this section is excepted from subparts C through H of part 172 of this subchapter.

(e) *Low production runs and prototypes.* Low production runs (i.e., annual production runs consisting of not more than 100 lithium cells or batteries), or prototype lithium cells or batteries transported for purposes of testing, are excepted from the testing and record keeping requirements of paragraph (a) of this section provided:

(1) Except as provided in paragraph (e)(3) of this section, each cell or battery is individually packed in a nonmetallic inner packaging, inside an outer packaging, and is surrounded by cushioning material that is non-combustible and non-conductive;

(2) The inner packages containing lithium cells or batteries are packed in one of the following packagings that meet the requirements of part 178, Subparts L and M at Packing Group I level.

(i) Metal (4A, 4B, 4N), wooden (4C1, 4C2, 4D, 4F), or solid plastic (4H2) box;

(ii) Metal (1A2, 1B2, 1N2), plywood (1D), or plastic (1H2) drum.

(3) Lithium batteries that weigh 12 kg (26.5 pounds) or more and have a strong, impact-resistant outer casing or assemblies of such batteries, may be packed in strong outer packagings, in protective enclosures (for example, in fully enclosed or wooden slatted crates), or on pallets or other handling devices, instead of packages meeting the UN performance packaging requirements in paragraphs (b)(3)(ii) and (b)(4) of this section. The battery or battery assembly must be secured to prevent inadvertent movement, and the terminals may not support the weight of other superimposed elements;

(4) Irrespective of the limit specified in column (9B) of the § 172.101 Hazardous Materials Table, the battery or battery assembly prepared for transport in accordance with this paragraph may have a mass exceeding 35 kg gross

ED_001691B_00009240

weight when transported by cargo aircraft; and

(5) Batteries or battery assemblies packaged in accordance with this paragraph are not permitted for transportation by passenger-carrying aircraft, and may be transported by cargo aircraft only if approved by the Associate Administrator prior to transportation.

(f) *Damaged, defective, or recalled cells or batteries.* Lithium cells or batteries, that have been damaged or identified by the manufacturer as being defective for safety reasons, that have the potential of producing a dangerous evolution of heat, fire, or short circuit (e.g. those being returned to the manufacturer for safety reasons) may be transported by highway, rail or vessel only, and must be packaged as follows:

(1) Each cell or battery must be placed in individual, non-metallic inner packaging that completely encloses the cell or battery;

(2) The inner packaging must be surrounded by cushioning material that is non-combustible, non-conductive, and absorbent; and

(3) Each inner packaging must be individually placed in one of the following packagings meeting the applicable requirements of part 178, subparts L, M, P and Q of this subchapter at the Packing Group I level:

(i) Metal (4A, 4B, 4N), wooden (4C1, 4C2, 4D, 4F), or solid plastic (4H2) box;

(ii) Metal (1A2, 1B2, 1N2), plywood (1D), or plastic (1H2) drum; or

(iii) Except for transportation by aircraft, for a single large battery or for a single battery contained in equipment, the following rigid large packagings are authorized:

(A) Metal (50A, 50B, 50N);

(B) Rigid plastic (50H);

(C) Plywood (50D); and

(4) The outer package must be marked with an indication that the package contains a "Damaged/defective lithium ion battery" and/or "Damaged/defective lithium metal battery" as appropriate.

(g) *Approval.* A lithium cell or battery that does not conform to the provisions of this subchapter may be transported only under conditions approved by the Associate Administrator.

[79 FR 46036, Aug. 6, 2014, as amended at 80 FR 1160, Jan. 8, 2015]

§ 173.186 Matches.

(a) Matches must be of a type which will not ignite spontaneously or undergo marked decomposition when subjected for 8 consecutive hours to a temperature of 93 °C (200 °F).

(b) *Definitions.* (1) *Fusee matches* are matches the heads of which are prepared with a friction-sensitive igniter composition and a pyrotechnic composition which burns with little or no flame, but with intense heat.

(2) *Safety matches* are matches combined with or attached to the box, book or card that can be ignited by friction only on a prepared surface.

(3) *Strike anywhere* matches are matches that can be ignited by friction on a solid surface.

(4) *Wax "Vesta"* matches are matches that can be ignited by friction either on a prepared surface or on a solid surface.

(c) Safety matches and wax "Vesta" matches must be tightly packed in securely closed inner packagings to prevent accidental ignition under conditions normally incident to transportation, and further packed in outer fiberboard, wooden, or other equivalent-type packagings. These matches in outer packagings not exceeding 23 kg (50 pounds) gross weight are not subject to any other requirement (except marking) of this subchapter. These matches may be packed in the same outer packaging with materials not subject to this subchapter.

(d) Strike-anywhere matches may not be packed in the same outer packaging with any material other than safety matches or wax "Vesta" matches, which must be packed in separate inner packagings.

(e) *Packagings.* Strike-anywhere matches must be tightly packed in securely closed chipboard, fiberboard, wooden, or metal inner packagings to prevent accidental ignition under conditions normally incident to transportation. Each inner packaging may contain no more than 700 strike-anywhere matches and must be packed in outer steel drums (1A1, 1A2), aluminum drums (1B1, 1B2), other metal drums (1N1, 1N2), steel jerricans (3A1, 3A2), aluminum jerricans (3B1, 3B2), steel (4A), aluminum (4N), other metal (4N) boxes, wooden (4C1, 4C2), plywood (4D),

ED_001691B_00009240

reconstituted wood (4F) or fiberboard (4G) boxes, plywood (1D) or fiber (1G) drums. Gross weight of fiberboard boxes (4G) must not exceed 30 kg (66 pounds). Gross weight of other outer packagings must not exceed 45 kg (100 pounds).

[Amdt. 173–224, 55 FR 52643, Dec. 21, 1990, as amended at 69 FR 76157, Dec. 20, 2004; 78 FR 1088, Jan. 7, 2013]

§ 173.187 Pyrophoric solids, metals or alloys, n.o.s.

Packagings for pyrophoric solids, metals, or alloys, n.o.s. must conform to the requirements of part 178 of this subchapter at the packing group performance level specified in the § 172.101 Table. These materials must be packaged as follows:

(a) In steel, aluminum or other metal boxes (4A, 4B or 4N) and contain no more than 15 kg (33 pounds) each.

(b) In wooden boxes (4C1, 4C2, 4D, or 4F) with inner metal receptacles which have a positive (not friction) means of closure and contain not more than 15 kg (33 pounds) each.

(c) In fiberboard boxes (4G) with inner metal receptacles which have a positive (not friction) means of closure and contain not more than 7.5 kg (17 pounds) each.

(d) In steel, aluminum or other metal drums (1A1, 1A2, 1B1, 1B2, 1N1 or 1N2) with a gross mass not exceeding 150 kg (331 pounds) per drum.

(e) In plywood drums (1D) with inner metal receptacles which have a positive (not friction) means of closure and contain not more than 15 kg (33 pounds) each.

(f) In fiber drums (1G) with inner metal receptacles which have a positive (not friction) means of closure and contain not more than 15 kg (33 pounds) each.

(g) In specification cylinders, as prescribed for any compressed gas, except for Specifications 8 and 3HT.

[71 FR 78632, Dec. 29, 2006, as amended at 78 FR 1088, Jan. 7, 2013]

§ 173.188 White or yellow phosphorus.

Phosphorus, white or yellow, when offered for transportation or transported by rail, highway, or water, must be packaged in water or dry in packagings conforming to the requirements of part 178 of this subchapter at the Packing Group I performance level, as follows:

(a) When placed in water, it must be packaged in specification packagings as follows:

(1) Steel, aluminum or other metal boxes (4A, 4B or 4N) or wooden boxes (4C1, 4C2, 4D, or 4F) with:

(i) Inner hermetically sealed (soldered) metal cans, enclosed in other hermetically sealed (soldered) metal cans, or

(ii) Inner water-tight metal cans containing not over 0.5 kg (1 pound) of phosphorus with screw-top closures; or

(2) Steel, aluminum or other metal drums (1A1, 1B1 or 1N1) not over 250 L (66 gallons) capacity each or steel, aluminum or other metal drums (1A2, 1B2, or 1N2) not over 115 L (30 gallons) capacity each.

(b) When dry, it must be cast solid and shipped in packagings as follows:

(1) Steel, aluminum or other metal drums (1A2, 1B2 or 1N2) not over 115 L (30 gallons) capacity each, or

(2) In projectiles or bombs when shipped by, for, or to the Departments of the Army, Navy, or Air Force of the United States Government, without bursting elements.

[Amdt. 173–224, 55 FR 52643, Dec. 21, 1990, as amended at 56 FR 66271, Dec. 20, 1991; 78 FR 1088, Jan. 7, 2013]

§ 173.189 Batteries containing sodium or cells containing sodium.

(a) Batteries and cells may not contain any hazardous material other than sodium, sulfur or sodium compounds (*e.g.*, sodium polysulfides, sodium tetrachloroaluminate, *etc.*). Cells not forming a component of a completed battery may not be offered for transportation at a temperature at which any liquid sodium is present in the cell. Batteries may only be offered for transportation, or transported, at a temperature at which any liquid sodium present in the battery conforms to the conditions prescribed in paragraph (d) of this section.

(b) Cells must be protected against short circuit and must consist of hermetically sealed metal casings that fully enclose the hazardous materials and that are so constructed and closed

ED_001691B_00009240

as to prevent the release of the hazardous materials under normal conditions of transport. Cells must be placed in suitable outer packagings with sufficient cushioning material to prevent contact between cells and between cells and the internal surfaces of the outer packaging, and to ensure that no dangerous shifting of the cells within the outer packaging occurs in transport. Cells must be packaged in 1A2, 1B2, 1N2, 1D, 1G, 1H2, 4A, 4B, 4N, 4C1, 4C2, 4D, 4F, 4G, 4H1, 4H2, 3A2, 3B2 or 3H2) outer packagings that meet the requirements of part 178 of this subchapter at the Packing Group II performance level.

(c) Batteries must consist of cells secured within, and fully enclosed by a metal casing so constructed and closed as to prevent the release of the hazardous materials under normal conditions of transport. Batteries may be offered for transportation, and transported, unpacked or in protective packagings that are not subject to the requirements of part 178 of this subchapter.

(d) Batteries containing any liquid sodium may not be offered for transportation, or transported, by aircraft. Batteries containing liquid sodium may be transported by motor vehicle, rail car or vessel under the following conditions:

(1) Batteries must be equipped with an effective means of preventing external short circuits, such as by providing complete electrical insulation of battery terminals or other external electrical connectors. Battery terminals or other electrical connectors penetrating the heat insulation fitted in battery casings must be provided with thermal insulation sufficient to prevent the temperature of the exposed surfaces of such devices from exceeding 55 °C (130 °F).

(2) No battery may be offered for transportation if the temperature at any point on the external surface of the battery exceeds 55 °C (130 °F).

(3) If any external source of heating is used during transportation to maintain sodium in batteries in a molten state, means must be provided to ensure that the internal temperature of the battery does not reach or exceed 400 °C (752 °F).

(4) When loaded in a transport vehicle or freight container:

(i) Batteries must be secured so as to prevent significant shifting within the transport vehicle or freight container under conditions normally incident to transportation;

(ii) Adequate ventilation and/or separation between batteries must be provided to ensure that the temperature at any point on the external surface of the battery casing will not exceed 240 °C (464 °F) during transportation; and

(iii) No other hazardous materials, with the exception of cells containing sodium, may be loaded in the same transport vehicle or freight container. Batteries must be separated from all other freight by a distance of not less than 0.5 m (1.6 feet).

(e) Vehicles, machinery and equipment powered by sodium batteries must be consigned under the entry "Battery-powered vehicle or Battery-powered equipment."

[Amdt. 173–241, 59 FR 67511, Dec. 29, 1994, as amended by Amdt. 173–256, 61 FR 51338, Oct. 1, 1996; 66 FR 45380, Aug. 28, 2001; 68 FR 61941, Oct. 30, 2003; 74 FR 2259, Jan. 14, 2009; 76 FR 43530, July 20, 2011; 78 FR 1088, Jan. 7, 2013]

§ 173.192 Packaging for certain toxic gases in Hazard Zone A.

When § 172.101 of this subchapter specifies a toxic material must be packaged under this section, only the following cylinders are authorized:

(a) Specification 3A1800, 3AA1800, 3AL1800, 3E1800, or seamless UN cylinders with a minimum test pressure in accordance with P200 of the UN Recommendations (IBR, see § 171.7 of this subchapter).

(1) Specification 3A, 3AA, or 3AL cylinders may not exceed 57 kg (125 lb) water capacity (nominal).

(2) Specification 3AL cylinders may only be offered for transportation or transported by highway and rail.

(b) Packagings must conform to the requirements of § 173.40.

(c) For cylinders used for phosgene:

(1) The filling density may not exceed 125 percent;

(2) A cylinder may not contain more than 68 kg (150 lb) of phosgene; and

(3) Each cylinder containing phosgene must be tested for leakage before it is offered for transportation or

ED_001691B_00009240

transported and must show no leakage. The leakage test must consist of immersing the cylinder and valve, without the protective cap attached, in a bath of water at a temperature of approximately 66 °C (150 °F) for at least 30 minutes, during which time frequent examinations must be made to note any escape of gas. The valve of the cylinder may not be loosened after this test. Suitable safeguards must be provided to protect personnel and facilities should failure occur during the test. As an alternative, each cylinder containing phosgene may be tested for leakage by a method approved in writing by the Associate Administrator.

[67 FR 51643, Aug. 8, 2002, as amended at 71 FR 33880, June 12, 2006]

§ 173.193 Bromoacetone, methyl bromide, chloropicrin and methyl bromide or methyl chloride mixtures, etc.

(a) Bromoacetone must be packaged as follows in metal boxes (4A, 4B or 4N) or wooden boxes (4C1, 4C2, 4D or 4F) with inner glass receptacles or tubes in hermetically sealed metal receptacles in corrugated fiberboard cartons. Bottles may not contain over 500 g (17.6 ounces) of liquid each and must be cushioned in cans with at least 12.7 mm (0.5 inch) of absorbent material. Total amount of liquid in the outer box must not exceed 11 kg (24 pounds). Packagings must conform to the requirements of part 178 of this subchapter at the Packing Group I performance level.

(b) Bromoacetone, methyl bromide, chloropicrin and methyl bromide mixtures, chloropicrin and methyl chloride mixtures, and chloropicrin mixtures charged with non-flammable, non-liquefied compressed gas must be packed in Specification 3A, 3AA, 3B, 3C, 3E, 4A, 4B, 4BA, 4BW, or 4C cylinders having not over 113 kg (250 pounds) water capacity (nominal). This capacity does not apply to shipments of methyl bromide.

(c) Methyl bromide mixtures containing up to 2% chloropicrin must be packaged in 4G fiberboard boxes with inside metal cans containing not over one pound each, or inside metal cans with a minimum wall thickness of 0.007 inch containing not over 1¾ pounds each. The one-pound can must be capable of withstanding an internal pressure of 130 psig without leakage or permanent distortion. Vapor pressure of the contents must not exceed 130 psig at 55 °C (130 °F). The 1¾–pound can must be capable of withstanding an internal pressure of 140 psig without leakage or permanent distortion. Vapor pressure of the contents must not exceed 140 psig at 55 °C (130 °F). Cans must not be liquid full at 130 °F. Cans must be constructed of tinplate or lined with suitable material and must have concave or pressure ends.

(d) Cylinders, except those containing methyl bromide, must conform to § 173.40 of this part.

[Amdt. 173–224, 55 FR 52643, Dec. 21, 1990, as amended at 56 FR 66271, Dec. 20, 1991; 57 FR 45463, Oct. 1, 1992; 78 FR 1088, Jan. 7, 2013]

§ 173.194 Gas identification sets.

Gas identification sets containing poisonous material must be packaged in packagings conforming to the requirements of part 178 of this subchapter at the Packing Group I performance level, as follows:

(a) In glass inner receptacles, hermetically sealed, of not over 40 mL (1.4 fluid ounces) each. Each glass inner receptacle must in turn be placed in a sealed fiberboard receptacle, cushioned with absorbent material. Not more than 12 fiberboard receptacles must in turn be placed in a 4G fiberboard box. No more than four boxes, well-cushioned, may in turn be placed in a steel cylinder. The cylinder must have a wall thickness of at least 3.7 mm (0.146 inch) and must have a hermetically sealed steel closure.

(b) When the poisonous material is absorbed in a medium such as activated charcoal or silical gel, gas identification sets may be shipped as follows:

(1) If the poisonous material does not exceed 5 mL (0.2 fluid ounce) if a liquid or 5 g (0.2 ounce) if a solid, it may be packed in glass inner receptacles of not over 120 mL (4.1 fluid ounces) each. Each glass receptacle, cushioned with absorbent material must be packed in a hermetically sealed metal can of not less than 0.30 mm (0.012 inch) wall thickness. Metal cans, surrounded on all sides by at least 25 mm (1 inch) of dry sawdust, must be packed in 4A, 4B or 4N metal boxes or 4C1, 4C2, 4D or 4F

ED_001691B_00009240

wooden boxes. Not more than 100 mL (3.4 fluid ounces) or 100 g (3.5 ounces) of poisonous materials may be packed in one outer box.

(2) If the poisonous material does not exceed 5 mL (0.2 fluid ounce) if a liquid or 20 g (0.7 ounce) if a solid, it may be packed in glass inner receptacles with screw-top closures of not less than 60 mL (2 fluid ounces), hermetically sealed. Twelve bottles containing poisonous material, not to exceed 100 mL (3.4 fluid ounces) or 100 g (3.5 ounces), or both, may be placed in a plastic carrying case, each glass receptacle surrounded by absorbent cushioning and each separated from the other by sponge rubber partitions. The plastic carrying case must be placed in a tightly fitting fiberboard box which in turn must be placed in a tightly fitting 4A, 4B or 4N metal box or 4C1, 4C2, 4D or 4F wooden box.

[Amdt. 173–224, 55 FR 52643, Dec. 21, 1990, as amended at 66 FR 45183, 45381, Aug. 28, 2001; 78 FR 1088, Jan. 7, 2013]

§ 173.195 Hydrogen cyanide, anhydrous, stabilized (hydrocyanic acid, aqueous solution).

(a) Hydrogen cyanide, anhydrous, stabilized, must be packed in specification cylinders or UN pressure receptacles as follows:

(1) As prescribed in § 173.192;

(2) Specification 3A480, 3A480X, 3AA480, or 3A1800 metal cylinders of not over 126 kg (278 pounds) water capacity (nominal);

(3) Shipments in 3AL cylinders are authorized only when transported by highway and rail; or

(4) UN cylinders, as specified in part 178, with a minimum test pressure of 100 bar and a maximum filling ratio of 0.55. The use of UN tubes and MEGCs is not authorized.

(b) Cylinders may not be charged with more than 0.27 kg (0.6 pound) of liquid per 0.45 kg (1 pound) water capacity of cylinder. Each filled cylinder must be tested for leakage before being offered for transportation or transported and must show absolutely no leakage; this test must consist of passing a piece of Guignard's sodium picrate paper over the closure of the cylinder, without the protection cap attached, to detect any escape of hydrogen cyanide from the cylinder. Other equally efficient test methods may be used in place of sodium picrate paper.

(c) Packagings for hydrogen cyanide must conform to § 173.40.

[Amdt. 173–224, 55 FR 52643, Dec. 21, 1990, as amended at 56 FR 66271, Dec. 20, 1991; 71 FR 33880, June 12, 2006]

§ 173.196 Category A infectious substances.

(a) *Category A infectious substances packaging.* A packaging for a Division 6.2 material that is a Category A infectious substance must meet the test standards of § 178.609 of this subchapter and must be marked in conformance with § 178.503(f) of this subchapter. A packaging for a Category A infectious substance is a triple packaging consisting of the following components:

(1) A leakproof primary receptacle.

(2) A leakproof secondary packaging. If multiple fragile primary receptacles are placed in a single secondary packaging, they must be either wrapped individually or separated to prevent contact between them.

(3) A rigid outer packaging of adequate strength for its capacity, mass and intended use; including, drums (1A1, 1A2, 1B1, 1B2, 1N1, 1N2, 1H1, 1H2, 1D, 1G); boxes (4A, 4B, 4N, 4C1, 4C2, 4D, 4F, 4G, 4H1, 4H2); or jerricans (3A1, 3A2, 3B1, 3B2, 3H1, 3H2). The outer packaging must measure not less than 100 mm (3.9 inches) at its smallest overall external dimension.

(4) For a liquid infectious substance, an absorbent material placed between the primary receptacle and the secondary packaging. The absorbent material must be sufficient to absorb the entire contents of all primary receptacles.

(5) An itemized list of contents enclosed between the secondary packaging and the outer packaging.

(6) The primary receptacle or secondary packaging used for infectious substances must be capable of withstanding, without leakage, an internal pressure producing a pressure differential of not less than 95 kPa (0.95 bar, 14 psi).

(7) The primary receptacle or secondary packaging used for infectious substances must be capable of withstanding without leakage temperatures

ED_001691B_00009240

in the range of −40 °C to + 55 °C (−40 °F to + 131 °F).

(b) *Additional requirements for packaging Category A infectious substances.* Category A infectious substances must be packaged according to the following requirements, depending on the physical state and other characteristics of the material.

(1) *Infectious substances shipped at ambient temperatures or higher.* Primary receptacles must be made of glass, metal, or plastic. Positive means of ensuring a leakproof seal must be provided, such as heat seal, skirted stopper, or metal crimp seal. If screw caps are used, they must be secured by positive means, such as with adhesive tape, paraffin sealing tape, or manufactured locking closure. Lyophilized substances may also be transported in primary receptacles that are flame-sealed with glass ampoules or rubber-stoppered glass vials fitted with metal seals.

(2) *Infectious substances shipped refrigerated or frozen (ice, pre-frozen packs, dry ice).* Ice, dry ice, or other refrigerant must be placed around the secondary packagings or in an overpack with one or more complete packages marked in accordance with § 178.503 of this subchapter. Interior supports must be provided to secure the secondary packagings in the original position after the ice or dry ice has dissipated. If ice is used, the outer packaging or overpack must be leakproof. If dry ice is used, the outer packaging or overpack must permit the release of carbon dioxide gas and otherwise meet the provisions in § 173.217. The primary receptacle and the secondary packaging must maintain their integrity at the temperature of the refrigerant used, as well as the temperatures and pressures of transport by aircraft to which they could be subjected if refrigeration were lost.

(3) *Infectious substances shipped in liquid nitrogen.* The primary receptacle and the secondary packaging must maintain their integrity at the temperature of the liquid nitrogen as well as the temperatures and pressures of transport by aircraft to which they could be subjected if refrigeration were lost. Refrigerated liquid nitrogen packagings must be metal vacuum insulated vessels or flasks vented to the atmosphere to prevent any increase in pressure within the packaging. The use of safety relief valves, check valves, frangible discs, or similar devices in the vent lines is prohibited. Fill and discharge openings must be protected against the entry of foreign materials that might cause an increase in the internal pressure. The package orientation markings specified in § 172.312(a) of this subchapter must be marked on the packaging. The packaging must be designed to prevent the release of any refrigerated liquid nitrogen irrespective of the packaging orientation.

(c) Live animals may not be used to transport infectious substances unless such substances cannot be sent by any other means. An animal containing or contaminated with an infectious substance must be transported under terms and conditions approved by the Associate Administrator for Hazardous Materials Safety.

(d) Body parts, organs or whole bodies meeting the definition of Division 6.2 material must be packaged as follows:

(1) In Division 6.2 packaging, as specified in paragraphs (a) and (b) of this section; or

(2) In packaging meeting the requirements of § 173.197.

[67 FR 53140, Aug. 14, 2002, as amended at 71 FR 32260, June 2, 2006; 74 FR 2259, Jan. 14, 2009; 78 FR 1088, Jan. 7, 2013]

§ 173.197 Regulated medical waste.

(a) *General provisions.* Non-bulk packagings, Large Packagings, and non-specification bulk outer packagings used for the transportation of regulated medical waste or clinical waste or (bio) medical waste must be rigid containers meeting the provisions of subpart B of this part.

(b) *Non-bulk packagings.* Except as provided in § 173.134(c) of this subpart, non-bulk packagings for regulated medical waste or clinical waste or (bio) medical waste must be UN standard packagings conforming to the requirements of part 178 of this subchapter at the Packing Group II performance level. A non-bulk packaging used as a sharps container must be puncture-resistant for sharps and sharps with residual fluid as demonstrated by conducting the performance tests in part

ED_001691B_00009240

178, subpart M, of this subchapter on packagings containing materials representative of the sharps and fluids (such as sterile sharps) intended to be transported in the packagings. Sharps containers must be securely closed to prevent leaks or punctures in conformance with the instructions provided by the packaging manufacturer in accordance with §178.2(c) of this subchapter.

(c) *Large Packagings.* Large Packagings constructed, tested, and marked in accordance with the requirements specified in subparts P and Q of part 178 of this subchapter and conforming to other requirements of this paragraph (c) may be used for the transportation of regulated medical waste, provided the waste is contained in inner packagings conforming to the requirements of paragraph (e) of this section. * * * Each Large Packaging design must be capable of meeting the vibration test specified in §178.819 of this subchapter. Each Large Packaging is subject to the periodic design requalification requirements for IBCs in §178.801(e) of this subchapter, and to the proof of compliance requirements of §178.801(j) and record retention requirements of §178.801(l) of this subchapter. Inner packagings used for liquids must be rigid.

(1) *Authorized packagings.* Only the following Large Packagings are authorized for the transportation of liquid or solid regulated medical waste:

(i) Metal: 50A, 50B, or 50N.

(ii) Rigid plastic: 50H.

(2) *Additional requirements.* Each Large Packaging used to transport liquid regulated medical waste must contain absorbent material in sufficient quantity and appropriate location to absorb the entire amount of liquid present in the event of an unintentional release of contents. Each Large Packaging design intended for the transportation of sharps containers must be puncture resistant and capable of retaining liquids. The design must also be tested and certified as meeting the performance tests specified for intermediate bulk containers intended for the transportation of liquids in subpart O of part 178 of this subchapter.

(d) *Non-specification bulk packaging.* A wheeled cart (Cart) or bulk outer packaging (BOP) is authorized as an outer packaging for the transportation of regulated medical waste in accordance with the provisions of this paragraph (d).

(1) *General requirements.* The following requirements apply to the transportation of regulated medical waste in Carts or BOPs:

(i) Regulated medical waste in each Cart or BOP must be contained in non-bulk inner packagings conforming to paragraph (e) of this section.

(ii) Each Cart or BOP must have smooth, non-porous interior surfaces free of cracks, crevices, and other defects that could damage plastic film inner packagings or impede disinfection operations.

(iii) Except as otherwise provided in this paragraph (d), each Cart or BOP must be used exclusively for the transportation of regulated medical waste. Prior to reuse, each Cart or BOP must be disinfected by any means effective for neutralizing the infectious substance the packaging previously contained.

(iv) Untreated concentrated stock cultures of infectious substances containing Category A materials may not be transported in a Cart or BOP.

(v) Division 6.1 toxic waste or Class 7 radioactive waste, with the exception of chemotherapeutic waste, may not be transported in a Cart or BOP.

(vi) Division 6.1 or Class 7 chemotherapeutic waste; untreated concentrated stock cultures of infectious substances containing Category B infectious substances; unabsorbed liquids; and sharps containers may be transported in a Cart or BOP only if packaged in rigid non-bulk packagings conforming to paragraph (a) of this section.

(2) *Wheeled cart (Cart).* A Cart is authorized as an outer packaging for the transportation of regulated medical waste if it conforms to the following requirements:

(i) Each Cart must consist of a solid, one-piece body with a nominal volume not exceeding 1,655 L (437 gallons).

(ii) Each Cart must be constructed of metal, rigid plastic, or fiberglass fitted with a lid to prevent leakage during transport.

(iii) Each Cart must be capable of meeting the requirements of §178.810

ED_001691B_00009240

(drop test) at the Packing Group II performance level.

(iv) Inner packagings must be placed into a Cart and restrained in such a manner as to minimize the risk of breakage.

(3) *Bulk outer packaging (BOP).* A BOP is authorized as an outer packaging for regulated medical waste if it conforms to the following requirements:

(i) Each BOP must be constructed of metal or fiberglass and have a capacity of at least 3.5 cubic meters (123.6 cubic feet) and not more than 45 cubic meters (1,590 cubic feet).

(ii) Each BOP must have bottom and side joints of fully welded or seamless construction and a rigid, weatherproof top to prevent the intrusion of water (*e.g.*, rain or snow).

(iii) Each opening in a BOP must be fitted with a closure to prevent the intrusion of water or the release of any liquid during all loading, unloading, and transportation operations.

(iv) In the upright position, each BOP must be leakproof and able to contain a liquid quantity of at least 300 liters (79.2 gallons) with closures open.

(v) Inner packagings must be placed in a BOP in such a manner as to minimize the risk of breakage. Rigid inner packagings may not be placed in the same BOP with plastic film bag inner packagings unless separated from each other by rigid barriers or dividers to prevent damage to the packagings caused by load shifting during normal conditions of transportation.

(vi) Division 6.1 or Class 7 chemotherapeutic waste, untreated concentrated stock cultures of infectious substances containing Category B infectious substances, unabsorbed liquids, and sharps may be transported in a BOP only if separated and secured as required in paragraph (d)(3)(v) of this section.

(e) *Inner packagings authorized for Large Packagings, Carts, and BOPs.* After September 30, 2003, inner packagings must be durably marked or tagged with the name and location (city and state) of the offeror, except when the entire contents of the Large Packaging, Cart, or BOP originates at a single location and is delivered to a single location.

(1) *Solids.* A plastic film bag is authorized as an inner packaging for solid regulated medical waste transported in a Cart, Large Packaging, or BOP. Waste material containing absorbed liquid may be packaged as a solid in a plastic film bag if the bag contains sufficient absorbent material to absorb and retain all liquid during transportation.

(i) The film bag may not exceed a volume of 175 L (46 gallons). The film bag must be marked and certified by its manufacturer as having passed the tests prescribed for tear resistance in ASTM D 1922, "Standard Test Method for Propagation Tear Resistance of Plastic Film and Thin Sheeting by Pendulum Method" (IBR, §171.7 of this subchapter) and for impact resistance in ASTM D 1709, "Standard Test Methods for Impact Resistance of Plastic Film by the Free-Falling Dart Method" (IBR, §171.7 of this subchapter). The film bag must meet an impact resistance of 165 grams and a tearing resistance of 480 grams in both the parallel and perpendicular planes with respect to the length of the bag.

(ii) The plastic film bag must be closed with a minimum of entrapped air to prevent leakage in transportation. The bag must be capable of being held in an inverted position with the closed end at the bottom for a period of 5 minutes without leakage.

(iii) When used as an inner packaging for Carts or BOPs, a plastic film bag may not weigh more than 10 kg (22 lbs.) when filled.

(2) *Liquids.* Liquid regulated medical waste or clinical waste or (bio) medical waste transported in a Large Packaging, Cart, or BOP must be packaged in a rigid inner packaging conforming to the provisions of subpart B of this part. conforming to the provisions of subpart B of this part. Liquid materials are not authorized for transportation in inner packagings having a capacity greater than 19 L (5 gallons).

(3) *Sharps.* Sharps transported in a Large Packaging, Cart, or BOP must be packaged in a puncture-resistant inner packaging (sharps container). Each sharps container must be securely closed to prevent leaks or punctures in conformance with instructions provided by the packaging manufacturer.

ED_001691B_00009240

Each sharps container exceeding 76 L (20 gallons) in volume must be capable of passing the performance tests in part 178, subpart M, of this subchapter at the Packing Group II performance level. A sharps container may be reused only if it conforms to the following criteria:

(i) The sharps container is specifically approved and certified by the U.S. Food and Drug Administration as a medical device for reuse.

(ii) The sharps container must be permanently marked for reuse.

(iii) The sharps container must be disinfected prior to reuse by any means effective for the infectious substance the container previously contained.

(iv) The sharps container must have a capacity greater than 7.57 L (2 gallons) and not greater than 151.42 L (40 gallons) in volume.

[67 FR 53140, Aug. 14, 2002, as amended at 68 FR 57632, Oct. 6, 2003; 68 FR 75744, Dec. 31, 2003; 71 FR 32261, June 2, 2006; 71 FR 78632, Dec. 29, 2006; 75 FR 60339, Sept. 30, 2010]

§ 173.198 Nickel carbonyl.

(a) Nickel carbonyl must be packed in specification steel or nickel cylinders as prescribed for any compressed gas except acetylene. A cylinder used exclusively for nickel carbonyl may be given a complete external visual inspection instead of the pressure test required by § 180.205 of this subchapter. Visual inspection must be in accordance with CGA Pamphlet C–6 (IBR, see § 171.7 of this subchapter).

(b) Packagings for nickel carbonyl must conform to § 173.40.

[Amdt. 173–224, 55 FR 52643, Dec. 21, 1990, as amended at 67 FR 51643, Aug. 8, 2002; 68 FR 75742, Dec. 31, 2003]

§ 173.199 Category B infectious substances.

(a) *Category B infectious substances.* Except as provided in this paragraph (a), Category B infectious substances are excepted from all other requirements of this subchapter when offered for transportation or transported in accordance with this section. Category B infectious substances offered for transportation or transported under the provisions of this section are subject to the incident reporting requirements in §§ 171.15 and 171.16 of this subchapter and to the requirements in § 175.75(b) of this subchapter concerning cargo location. Except as provided in paragraph (a)(9) of this section, a Category B infectious substance meeting the definition of a hazard class other than Division 6.2 must be offered for transportation or transported in accordance with applicable requirements of this subchapter.

(1) A Category B infectious substance must be packaged in a triple packaging consisting of a primary receptacle, a secondary packaging, and a rigid outer packaging.

(2) Primary receptacles must be packed in secondary packaging in such a way that, under normal conditions of transport, they cannot break, be punctured, or leak their contents into the secondary packaging.

(3) Secondary packagings must be secured in rigid outer packagings with suitable cushioning material such that any leakage of the contents will not impair the protective properties of the cushioning material or the outer packaging.

(4) The completed package must be designed, constructed, maintained, filled, its contents limited, and closed so that under conditions normally encountered in transportation, including removal from a pallet or overpack for subsequent handling, there will be no release of hazardous material into the environment. Package effectiveness must not be substantially reduced for minimum and maximum temperatures, changes in humidity and pressure, and shocks, loadings and vibrations normally encountered during transportation. The packaging must be capable of successfully passing the drop tests in § 178.609(d) and (h) of this subchapter at a drop height of at least 1.2 meters (3.9 feet). Following the drop tests, there must be no leakage from the primary receptacle, which must remain protected by absorbent material, when required, in the secondary packaging. At least one surface of the outer packaging must have a minimum dimension of 100 mm by 100 mm (3.9 inches).

(5) The following square-on-point mark must be displayed on the outer packaging on a background of contrasting color. The width of the line forming the border must be at least 2

ED_001691B_00009240

mm (0.08 inches) and the letters and numbers must be at least 6 mm (0.24 inches) high. The size of the mark must be such that no side of the diamond is less than 50 mm (1.97 inches) in length as measured from the outside of the lines forming the border. The proper shipping name "Biological substances, Category B" must be marked on the outer packaging adjacent to the diamond-shaped mark in letters that are at least 6 mm (0.24 inches) high.

(i) *Transitional exception*—A marking in conformance with the requirements of this paragraph in effect on December 31, 2014, may continue to be used until December 31, 2016.

(ii) For domestic transportation, a packaging marked prior to January 1, 2017 and in conformance with the requirements of this paragraph in effect on December 31, 2014, may continue in service until the end of its useful life.

(6) When packages are placed in an overpack, the package markings required by this section must be either clearly visible or reproduced on the outside of the overpack.

(7) The name and telephone number of a person who is either knowledgeable about the material being shipped and has comprehensive emergency response and incident mitigation information for the material, or has immediate access to a person who possesses such knowledge and information, must be included on a written document (such as an air waybill or bill of lading) or on the outer packaging.

(8) For transportation by aircraft, each package, overpack, pallet, or unit load device containing a Category B infectious substance must be inspected for leakage when it is unloaded from the aircraft. If evidence of leakage is found, the cargo compartment in which the package, overpack, pallet, or unit load device was transported must be disinfected. Disinfection may be by any means that will make the material released ineffective at transmitting disease.

(9) A packaging containing inner packagings of Category B infectious substances may not contain other hazardous materials except—

(i) Refrigerants, such as dry ice or liquid nitrogen, as authorized under paragraph (d) of this section;

(ii) Anticoagulants used to stabilize blood or plasma; or

(iii) Small quantities of Class 3, Class 8, Class 9, or other materials in Packing Groups II and III used to stabilize or prevent degradation of the sample, provided the quantity of such materials does not exceed 30 mL (1 ounce) or 30 g (1 ounce) in each inner packaging. Such preservatives are not subject to the requirements of this subchapter.

(10) Clear instructions on filling and closing a packaging used to transport a Category B infectious substance must be provided by the packaging manufacturer and subsequent distributors to the consignor or person who prepares the package to enable the package to be correctly prepared for transport. A copy or electronic image of these instructions must be retained by the manufacturer and subsequent distributors for at least one year from the date of issuance, and made available for inspection by a Federal or state government representative upon request. Packagings must be filled and closed in accordance with the information provided by the packaging manufacturer or subsequent distributor.

(b) *Liquid Category B infectious substances.* Liquid Category B infectious substances must be packaged in conformance with the following provisions:

(1) The primary receptacle must be leakproof.

(2) Absorbent material must be placed between the primary receptacle and secondary packaging. If several fragile primary receptacles are placed in a single secondary packaging, they must be either individually wrapped or separated to prevent contact between them. The absorbent material must be of sufficient quantity to absorb the entire contents of the primary receptacles and not compromise the integrity of the cushioning material or the outer packaging.

(3) The secondary packaging must be leakproof.

(4) For shipments by aircraft, the primary receptacle or the secondary packaging must be capable of withstanding without leakage an internal pressure producing a pressure differential of not less than 95 kPa (0.95 bar, 14 psi).

ED_001691B_00009240

(5) For shipments by aircraft, the maximum quantity contained in each primary receptacle, including any material used to stabilize or prevent degradation of the sample, may not exceed 1 L (34 ounces), and the maximum quantity contained in each outer packaging, including any material used to stabilize or prevent degradation of the samples, may not exceed 4 L (1 gallon). The outer packaging limitation does not include ice, dry ice, or liquid nitrogen when used to maintain the integrity of the material.

(c) *Solid Category B infectious substances.* Solid Category B infectious substances must be packaged in a triple packaging, consisting of a primary receptacle, secondary packaging, and outer packaging, conforming to the following provisions:

(1) The primary receptacle must be siftproof.

(2) If several fragile primary receptacles are placed in a single secondary packaging, they must be either individually wrapped or separated to prevent contact between them.

(3) The secondary packaging must be siftproof.

(4) If residual liquid may be present in the primary receptacle during transportation, then the material must be transported in accordance with requirements in paragraph (b) of this section. A solid material that may become liquid during transportation must be transported in accordance with paragraph (b) of this section.

(5) Except for packages containing body parts, organs, or whole bodies, for shipment by aircraft, the outer packaging may not contain more than 4 kg (8.8 pounds), including any material used to stabilize or prevent degradation of the samples. The outer packaging limitation does not include ice, dry ice, or liquid nitrogen when used to maintain the integrity of the material.

(d) *Refrigerated or frozen specimens (ice, dry ice, and liquid nitrogen).* In addition to complying with the requirements in this paragraph (d), dry ice and liquid nitrogen must be offered for transportation or transported in accordance with the applicable requirements of this subchapter.

(1) Ice or dry ice must be placed outside the secondary packaging or in an overpack. Interior supports must be provided to secure the secondary packagings in the original position. If ice is used, the outside packaging must be leakproof or must have a leakproof liner. If dry ice is used, the outside packaging must permit the release of carbon dioxide gas and otherwise meet the provisions in § 173.217. The primary receptacle and secondary packaging must maintain their integrity at the temperature of the refrigerant used, as well as the temperatures and pressures of transport by aircraft they could be subjected to if refrigeration were lost, and sufficient absorbent material must be provided to absorb all liquid, including melted ice.

(2) The package is marked "Carbon dioxide, solid" or "Dry ice" and an indication that the material being refrigerated is used for diagnostic or treatment purposes (e.g., frozen medical specimens).

(e) *Training.* Each person who offers or transports a Category B infectious substance under the provisions of this section must know about the requirements of this section.

[67 FR 53142, Aug. 14, 2002, as amended at 71 FR 32261, June 2, 2006; 72 FR 55693, Oct. 1, 2007; 78 FR 1088, Jan. 7, 2013; 80 FR 1160, Jan. 8, 2015]

§ 173.201 Non-bulk packagings for liquid hazardous materials in Packing Group I.

(a) When § 172.101 of this subchapter specifies that a liquid hazardous material be packaged under this section, only non-bulk packagings prescribed in this section may be used for its transportation. Each packaging must conform to the general packaging requirements of subpart B of part 173, to the requirements of part 178 of this subchapter at the Packing Group I performance level, and to the requirements of the special provisions of column 7 of the § 172.101 table.

(b) The following combination packagings are authorized:

Outer packagings:
Steel drum: 1A1 or 1A2
Aluminum drum: 1B1 or 1B2
Metal drum other than steel or aluminum: 1N1 or 1N2
Plywood drum: 1D
Fiber drum: 1G
Plastic drum: 1H1 or 1H2

ED_001691B_00009240

Steel jerrican: 3A1 or 3A2
Plastic jerrican: 3H1 or 3H2
Aluminum jerrican: 3B1 or 3B2
Steel box: 4A
Aluminum box: 4B
Natural wood box: 4C1 or 4C2
Plywood box: 4D
Reconstituted wood box: 4F
Fiberboard box: 4G
Expanded plastic box: 4H1
Solid plastic box: 4H2
Metal box other than steel or aluminum: 4N
Inner packagings:
Glass or earthenware receptacles
Plastic receptacles
Metal receptacles
Glass ampoules

(c) Except for transportation by passenger aircraft, the following single packagings are authorized:

Steel drum: 1A1 or 1A2
Aluminum drum: 1B1 or 1B2
Metal drum other than steel, or aluminum: 1N1 or 1N2
Plastic drum: 1H1 or 1H2
Steel jerrican: 3A1 or 3A2
Plastic jerrican: 3H1 or 3H2
Aluminum jerrican: 3B1 or 3B2
Plastic receptacle in steel, aluminum, fiber or plastic drum: 6HA1, 6HB1, 6HG1, 6HH1
Plastic receptacle in steel, aluminum, wooden, plywood or fiberboard box: 6HA2, 6HB2, 6HC, 6HD2 or 6HG2
Glass, porcelain or stoneware in steel, aluminum or fiber drum: 6PA1, 6PB1 or 6PG1
Glass, porcelain or stoneware in steel, aluminum, wooden or fiberboard box: 6PA2, 6PB2, 6PC or 6PG2
Glass, porcelain or stoneware in solid or expanded plastic packaging: 6PH1 or 6PH2
Cylinders, specification or UN standard, as prescribed for any compressed gas, except 3HT and those prescribed for acetylene.

[Amdt. 173–224, 55 FR 52634, Dec. 21, 1990, as amended by Amdt. 173–241, 59 FR 67518, Dec. 29, 1994; Amdt. 173–261, 62 FR 24734, May 6, 1997; 71 FR 33880, June 12, 2006; 78 FR 1089, Jan. 7, 2013]

§ 173.202 Non-bulk packagings for liquid hazardous materials in Packing Group II.

(a) When § 172.101 of this subchapter specifies that a liquid hazardous material be packaged under this section, only non-bulk packagings prescribed in this section may be used for its transportation. Each packaging must conform to the general packaging requirements of subpart B of part 173, to the requirements of part 178 of this subchapter at the Packing Group I or II performance level (unless otherwise excepted), and to the particular requirements of the special provisions of column 7 of the § 172.101 table.

(b) The following combination packagings are authorized:

Outer packagings:
Steel drum: 1A1 or 1A2
Aluminum drum: 1B1 or 1B2
Metal drum other than steel or aluminum: 1N1 or 1N2
Plywood drum: 1D
Fiber drum: 1G
Plastic drum: 1H1 or 1H2
Wooden barrel: 2C2
Steel jerrican: 3A1 or 3A2
Plastic jerrican: 3H1 or 3H2
Aluminum jerrican: 3B1 or 3B2
Steel box: 4A
Aluminum box: 4B
Natural wood box: 4C1 or 4C2
Plywood box: 4D
Reconstituted wood box: 4F
Fiberboard box: 4G
Expanded plastic box: 4H1
Solid plastic box: 4H2
Metal box other than steel or aluminum: 4N
Inner packagings:
Glass or earthenware receptacles
Plastic receptacles
Metal receptacles
Glass ampoules

(c) Except for transportation by passenger aircraft, the following single packagings are authorized:

Steel drum: 1A1 or 1A2
Aluminum drum: 1B1 or 1B2
Metal drum other than steel or aluminum: 1N1 or 1N2
Plastic drum: 1H1 or 1H2
Fiber drum: 1G (with liner)
Wooden barrel: 2C1
Steel jerrican: 3A1 or 3A2
Plastic jerrican: 3H1 or 3H2
Aluminum jerrican: 3B1 or 3B2
Plastic receptacle in steel, aluminum, fiber or plastic drum: 6HA1, 6HB1, 6HG1 or 6HH1
Plastic receptacle in steel, aluminum, wooden, plywood or fiberboard box: 6HA2, 6HB2, 6HC, 6HD2 or 6HG2
Glass, porcelain or stoneware in steel, aluminum or fiber drum: 6PA1, 6PB1 or 6PG1
Glass, porcelain or stoneware in steel, aluminum, wooden or fiberboard box: 6PA2, 6PB2, 6PC or 6PG2
Glass, porcelain or stoneware in solid or expanded plastic packaging: 6PH1 or 6PH2
Plastic receptacle in plywood drum: 6HD1
Glass, porcelain or stoneware in plywood drum or wickerwork hamper: 6PD1 or 6PD2

ED_001691B_00009240

Cylinders, specification, as prescribed for any compressed gas, except for Specifications 8 and 3HT

[Amdt. 173–224, 55 FR 52643, Dec. 21, 1990, as amended at 56 FR 66271, Dec. 20, 1991; Amdt. 173–241, 59 FR 67518, Dec. 29, 1994; Amdt. 173–261, 62 FR 24734, May 6, 1997; 62 FR 51560, Oct. 1, 1997; 78 FR 1089, Jan. 7, 2013]

§ 173.203 Non-bulk packagings for liquid hazardous materials in Packing Group III.

(a) When § 172.101 of this subchapter specifies that a liquid hazardous material be packaged under this section, only non-bulk packagings prescribed in this section may be used for its transportation. Each packaging must conform to the general packaging requirements of subpart B of part 173, to the requirements of part 178 of this subchapter at the Packing Group I, II or III performance level, and to the requirements of the special provisions of column 7 of the § 172.101 table.

(b) The following combination packagings are authorized:

Outer packagings:
Steel drum: 1A1 or 1A2
Aluminum drum: 1B1 or 1B2
Metal drum other than steel or aluminum: 1N1 or 1N2
Plywood drum: 1D
Fiber drum: 1G
Plastic drum: 1H1 or 1H2
Wooden barrel: 2C2
Steel jerrican: 3A1 or 3A2
Plastic jerrican: 3H1 or 3H2
Aluminum jerrican: 3B1 or 3B2
Steel box: 4A
Aluminum box: 4B
Natural wood box: 4C1 or 4C2
Plywood box: 4D
Reconstituted wood box: 4F
Fiberboard box: 4G
Expanded plastic box: 4H1
Solid plastic box: 4H2
Metal box other than steel or aluminum: 4N
Inner packagings:
Glass or earthenware receptacles
Plastic receptacles
Metal receptacles
Glass ampoules

(c) The following single packagings are authorized:

Steel drum: 1A1 or 1A2
Aluminum drum: 1B1 or 1B2
Metal drum other than steel or aluminum: 1N1
Plastic drum: 1H1 or 1H2
Fiber drum: 1G (with liner)
Wooden barrel: 2C1
Steel jerrican: 3A1 or 3A2
Plastic jerrican: 3H1 or 3H2
Aluminum jerrican: 3B1 or 3B2
Plastic receptacle in steel, aluminum, fiber or plastic drum: 6HA1, 6HB1, 6HG1 or 6HH1
Plastic receptacle in steel, aluminum, wooden, plywood or fiberboard box: 6HA2, 6HB2, 6HC, 6HD2 or 6HG2
Glass, porcelain or stoneware in steel, aluminum or fiber drum: 6PA1, 6PB1, or 6PG1
Glass, porcelain or stoneware in steel, aluminum, wooden or fiberboard box: 6PA2, 6PB2, 6PC or 6PG2
Glass, porcelain or stoneware in solid or expanded plastic packaging: 6PH1 or 6PH2
Plastic receptacle in plywood drum: 6HD1
Glass, porcelain or stoneware in plywood drum or wickerwork hamper: 6PD1 or 6PD2
Cylinders, as prescribed for any compressed gas, except for Specifications 8 and 3HT

[Amdt. 173–224, 55 FR 52643, Dec. 21, 1990, as amended at 56 FR 66271, Dec. 20, 1991; Amdt. 173–241, 59 FR 67518, Dec. 29, 1994; Amdt. 173–261, 62 FR 24734, May 6, 1997; 78 FR 1089, Jan. 7, 2013]

§ 173.204 Non-bulk, non-specification packagings for certain hazardous materials.

When § 172.101 of this subchapter specifies that a liquid or solid hazardous material be packaged under this section, any appropriate non-bulk packaging which conforms to the general packaging requirements of subpart B of part 173 may be used for its transportation. Packagings need not conform to the requirements of part 178 of this subchapter.

§ 173.205 Specification cylinders for liquid hazardous materials.

When § 172.101 of this subchapter specifies that a hazardous material must be packaged under this section, the use of any specification or UN cylinder, except those specified for acetylene, is authorized. Cylinders used for toxic materials in Division 6.1 or 2.3 must conform to the requirements of § 173.40.

[71 FR 33881, June 12, 2006]

§ 173.206 Packaging requirements for chlorosilanes.

(a) When § 172.101 of this subchapter specifies that a hazardous material be packaged under this section, only non-bulk packagings prescribed in this section may be used for its transportation. Each packaging must conform

ED_001691B_00009240

to the general packaging requirements of subpart B of part 173, to the requirements of part 178 of this subchapter at the Packing Group I or II performance level (unless otherwise excepted), and to the particular requirements of the special provisions of Column (7) of the § 172.101 Table.

(b) The following combination packagings are authorized:

Outer packagings:

Steel drum: 1A2
Plastic drum: 1H2
Plywood drum: 1D
Fiber drum: 1G
Steel box: 4A
Natural wood box: 4C1 or 4C2
Plywood box: 4D
Reconstituted wood box: 4F
Fiberboard box: 4G
Expanded plastic box: 4H1
Solid plastic box: 4H2

Inner packagings:

Glass or Steel receptacle

(c) Except for transportation by passenger aircraft, the following single packagings are authorized:

Steel drum: 1A1
Steel jerrican: 3A1
Plastic receptacle in steel drum: 6HA1
Cylinders (for liquids in PG I), specification or UN standard, as prescribed for any compressed gas, except Specification 3HT and those prescribed for acetylene
Cylinders (for liquids in PG II), specification, as prescribed for any compressed gas, except Specification 8 and 3HT cylinders.

[74 FR 2259, Jan. 14, 2009, as amended at 75 FR 72, Jan. 4, 2010]

§ 173.211 Non-bulk packagings for solid hazardous materials in Packing Group I.

(a) When § 172.101 of this subchapter specifies that a solid hazardous material be packaged under this section, only non-bulk packagings prescribed in this section may be used for its transportation. Each package must conform to the general packaging requirements of subpart B of part 173, to the requirements of part 178 of this subchapter at the Packing Group I performance level, and to the requirements of the special provisions of column 7 of the § 172.101 table.

(b) The following combination packagings are authorized:

Outer packagings:
Steel drum: 1A1 or 1A2
Aluminum drum: 1B1 or 1B2
Metal drum other than steel or aluminum: 1N1 or 1N2
Plywood drum: 1D
Fiber drum: 1G
Plastic drum: 1H1 or 1H2
Wooden barrel: 2C2
Steel jerrican: 3A1 or 3A2
Plastic jerrican: 3H1 or 3H2
Aluminum jerrican: 3B1 or 3B2
Steel box: 4A
Aluminum box: 4B
Natural wood box: 4C1 or 4C2
Plywood box: 4D
Reconstituted wood box: 4F
Fiberboard box: 4G
Solid plastic box: 4H2
Metal box other than steel or aluminum: 4N
Inner packagings:
Glass or earthenware receptacles
Plastic receptacles
Metal receptacles
Glass ampoules

(c) Except for transportation by passenger aircraft, the following single packagings are authorized:

Steel drum: 1A1 or 1A2
Aluminum drum: 1B1 or 1B2
Metal drum other than steel or aluminum: 1N1 or 1N2
Plastic drum: 1H1 or 1H2
Fiber drum: 1G
Steel jerrican: 3A1 or 3A2
Plastic jerrican: 3H1 or 3H2
Aluminum jerrican: 3B1 or 3B2
Steel box with liner: 4A
Aluminum box with liner: 4B
Metal box other than steel or aluminum: 4N
Natural wood box, sift proof: 4C2
Plastic receptacle in steel, aluminum, plywood, fiber or plastic drum: 6HA1, 6HB1, 6HD1, 6HG1 or 6HH1
Glass, porcelain or stoneware in steel, aluminum, plywood or fiber drum: 6PA1, 6PB1, 6PD1 or 6PG1
Glass, porcelain or stoneware in steel, aluminum, wooden or fiberboard box: 6PA2, 6PB2, 6PC or 6PG2
Glass, porcelain or stoneware in expanded or solid plastic packaging: 6PH1 or 6PH2
Cylinders, as prescribed for any compressed gas, except for Specification 8 and 3HT

[Amdt. 173–224, 55 FR 52643, Dec. 21, 1990, as amended at 56 FR 66271, Dec. 20, 1991; 57 FR 45463, Oct. 1, 1992; Amdt. 173–241, 59 FR 67511, 67518, Dec. 29, 1994; Amdt. 173–261, 62 FR 24734, May 6, 1997; 69 FR 76157, Dec. 20, 2004; 78 FR 1089, Jan. 7, 2013]

ED_001691B_00009240

§ 173.212 Non-bulk packagings for solid hazardous materials in Packing Group II.

(a) When § 172.101 of this subchapter specifies that a solid hazardous material be packaged under this section, only non-bulk packagings prescribed in this section may be used for its transportation. Each package must conform to the general packaging requirements of subpart B of part 173, to the requirements of part 178 of this subchapter at the Packing Group I or II performance level, and to the requirements of the special provisions of column 7 of the § 172.101 table.

(b) The following combination packagings are authorized:

Outer packagings:
Steel drum: 1A1 or 1A2
Aluminum drum: 1B1 or 1B2
Metal drum other than steel or aluminum: 1N1 or 1N2
Plywood drum: 1D
Fiber drum: 1G
Plastic drum: 1H1 or 1H2
Wooden barrel: 2C2
Steel jerrican: 3A1 or 3A2
Plastic jerrican: 3H1 or 3H2
Aluminum jerrican: 3B1 or 3B2
Steel box: 4A
Aluminum box: 4B
Natural wood box: 4C1 or 4C2
Plywood box: 4D
Reconstituted wood box: 4F
Fiberboard box: 4G
Solid plastic box: 4H2
Metal box other than steel or aluminum: 4N
Inner packagings:
Glass or earthenware receptacles
Plastic receptacles
Metal receptacles
Glass ampoules

(c) Except for transportation by passenger aircraft, the following single packagings are authorized:

Steel drum: 1A1 or 1A2
Aluminum drum: 1B1 or 1B2
Plywood drum: 1D
Plastic drum: 1H1 or 1H2
Fiber drum: 1G
Metal drum other than steel or aluminum: 1N1 or 1N2
Wooden barrel: 2C1 or 2C2
Steel jerrican: 3A1 or 3A2
Plastic jerrican: 3H1 or 3H2
Aluminum jerrican: 3B1 or 3B2
Steel box: 4A
Steel box with liner: 4A
Aluminum box: 4B
Aluminum box with liner: 4B
Metal box other than steel or aluminum: 4N
Natural wood box: 4C1
Natural wood box, sift proof: 4C2
Plywood box: 4D
Reconstituted wood box: 4F
Fiberboard box: 4G
Expanded plastic box: 4H1
Solid plastic box: 4H2
Bag, woven plastic: 5H1, 5H2 or 5H3
Bag, plastic film: 5H4
Bag, textile: 5L1, 5L2 or 5L3
Bag, paper, multiwall, water resistant: 5M2
Plastic receptacle in steel, aluminum, plywood, fiber or plastic drum: 6HA1, 6HB1, 6HD1, 6HG1 or 6HH1
Plastic receptacle in steel, aluminum, wood, plywood or fiberboard box: 6HA2, 6HB2, 6HC, 6HD2 or 6HG2
Glass, porcelain or stoneware in steel, aluminum, plywood or fiber drum: 6PA1, 6PB1, 6PD1 or 6PG1
Glass, porcelain or stoneware in steel, aluminum, wooden or fiberboard box: 6PA2, 6PB2, 6PC or 6PG2
Glass, porcelain or stoneware in expanded or solid plastic packaging: 6PH1 or 6PH2
Cylinders, as prescribed for any compressed gas, except for Specification 8 and 3HT

[Amdt. 173–224, 55 FR 52634, Dec. 21, 1990, as amended by Amdt. 173–241, 59 FR 67511, 67518, Dec. 29, 1994; Amdt. 173–261, 62 FR 24734, May 6, 1997; 69 FR 76157, Dec. 20, 2004; 70 FR 34398, June 14, 2005; 78 FR 1089, Jan. 7, 2013]

§ 173.213 Non-bulk packagings for solid hazardous materials in Packing Group III.

(a) When § 172.101 of this subchapter specifies that a solid hazardous material be packaged under this section, only non-bulk packagings prescribed in this section may be used for its transportation. Each package must conform to the general packaging requirements of subpart B of part 173, to the requirements of part 178 of this subchapter at the Packing Group I, II or III performance level, and to the requirements of the special provisions of column 7 of the § 172.101 table.

(b) The following combination packagings are authorized:

Outer packagings:
Steel drum: 1A1 or 1A2
Aluminum drum: 1B1 or 1B2
Metal drum other than steel or aluminum: 1N1 or 1N2
Plywood drum: 1D
Fiber drum: 1G
Plastic drum: 1H1 or 1H2
Wooden barrel: 2C2
Steel jerrican: 3A1 or 3A2
Plastic jerrican: 3H1 or 3H2
Aluminum jerrican: 3B1 or 3B2

ED_001691B_00009240

Steel box: 4A
Aluminum box: 4B
Natural wood box: 4C1 or 4C2
Plywood box: 4D
Reconstituted wood box: 4F
Fiberboard box: 4G
Solid plastic box: 4H2
Metal box other than steel or aluminum: 4N
Inner packagings:
Glass or earthenware receptacles
Plastic receptacles
Metal receptacles
Glass ampoules

(c) The following single packagings are authorized:

Steel drum: 1A1 or 1A2
Aluminum drum: 1B1 or 1B2
Plywood drum: 1D
Plastic drum: 1H1 or 1H2
Fiber drum: 1G
Metal drum other than steel or aluminum: 1N1 or 1N2
Wooden barrel: 2C1 or 2C2
Steel jerrican: 3A1 or 3A2
Plastic jerrican: 3H1 or 3H2
Aluminum jerrican: 3B1 or 3B2
Steel box: 4A
Steel box with liner: 4A
Aluminum box: 4B
Aluminum box with liner: 4B
Metal box other than steel or aluminum: 4N
Natural wood box: 4C1
Natural wood box, sift proof: 4C2
Plywood box: 4D
Reconstituted wood box: 4F
Fiberboard box: 4G
Expanded plastic box: 4H1
Solid plastic box: 4H2
Bag, woven plastic: 5H1, 5H2 or 5H3
Bag, plastic film: 5H4
Bag, textile: 5L1, 5L2 or 5L3
Bag, paper, multiwall, water resistant: 5M2
Plastic receptacle in steel, aluminum, plywood, fiber or plastic drum: 6HA1, 6HB1, 6HD1, 6HG1 or 6HH1
Plastic receptacle in steel, aluminum, wood, plywood or fiberboard box: 6HA2, 6HB2, 6HC, 6HD2 or 6HG2
Glass, porcelain or stoneware in steel, aluminum, plywood or fiber drum: 6PA1, 6PB1, 6PD1 or 6PG1
Glass, porcelain or stoneware in steel, aluminum, wooden or fiberboard box: 6PA2, 6PB2, 6PC or 6PG2
Glass, porcelain or stoneware in expanded or solid plastic packaging: 6PH1 or 6PH2
Cylinders, as prescribed for any compressed gas, except for Specification 8 and 3HT

[Amdt. 173–224, 55 FR 52643, Dec. 21, 1990, as amended by Amdt. 173–241, 59 FR 67511, 67518, Dec. 29, 1994; Amdt. 173–261, 62 FR 24734, May 6, 1997; 69 FR 76158, Dec. 20, 2004; 70 FR 34398, June 14, 2005; 78 FR 1089, Jan. 7, 2013]

§ 173.214 Packagings which require approval by the Associate Administrator.

When § 172.101 of this subchapter specifies that a hazardous material be packaged under this section, packagings and method of shipment must be approved by the Associate Administrator prior to the first shipment.

[Amdt. 173–224, 55 FR 52643, Dec. 21, 1990, as amended at 66 FR 45379, Aug. 28, 2001]

§ 173.216 Asbestos, blue, brown or white.

(a) Asbestos, blue, brown or white, includes each of the following hydrated mineral silicates: chrysolite, crocidolite, amosite, anthophyllite asbestos, tremolite asbestos, actinolite asbestos, and every product containing any of these materials.

(b) [Reserved]

(c) Packagings for asbestos must conform to the general packaging requirements of subpart B of this part but need not conform to the requirements of part 178 of this subchapter. Asbestos must be offered for transportation and transported in—

(1) Rigid, leaktight packagings, such as metal, plastic or fiber drums, portable tanks, hopper-type rail cars, or hopper-type motor vehicles;

(2) Bags or other non-rigid packagings in closed freight containers, motor vehicles, or rail cars that are loaded by and for the exclusive use of the consignor and unloaded by the consignee;

(3) Bags or other non-rigid packagings which are dust and sift proof must be placed in rigid outer packagings or closed freight containers.

[Amdt. 173–224, 55 FR 52643, Dec. 21, 1990, as amended at 66 FR 45379, Aug. 28, 2001; 68 FR 45034, July 31, 2003; 71 CFR 78632, Dec. 29, 2006]

§ 173.217 Carbon dioxide, solid (dry ice).

(a) Carbon dioxide, solid (dry ice), when offered for transportation or transported by aircraft or water, must be packed in packagings designed and constructed to permit the release of carbon dioxide gas to prevent a buildup of pressure that could rupture the packagings. Packagings must conform to the general packaging requirements

ED_001691B_00009240

of subpart B of this part but need not conform to the requirements of part 178 of this subchapter.

(b) For transportation by vessel:

(1) Each transport vehicle and freight container containing solid carbon dioxide must be conspicuously marked on two sides "WARNING CO_2 SOLID (DRY ICE)."

(2) Other packagings containing solid carbon dioxide must be marked "CARBON DIOXIDE, SOLID—DO NOT STOW BELOW DECKS."

(c) For transportation by aircraft:

(1) In addition to the applicable marking requirements in subpart D of part 172, the net mass of the carbon dioxide, solid (dry ice) must be marked on the outside of the package. This provision also applies to unit load devices (ULDs) when the ULD contains dry ice and is considered the packaging.

(2) The shipper must make arrangements with the operator for each shipment.

(3) The quantity limits per package shown in Columns (9A) and (9B) of the Hazardous Materials Table in § 172.101 are not applicable to dry ice being used as a refrigerant for other than hazardous materials loaded in a unit load device or other type of pallet. In such a case, the unit load device or other type of pallet must allow the venting of the carbon dioxide gas to prevent a dangerous build up of pressure, and be identified to the operator.

(4) Dry ice is excepted from the shipping paper requirements of subpart C of part 172 of this subchapter provided alternative written documentation is supplied containing the following information: proper shipping name (Dry ice or Carbon dioxide, solid), class 9, UN number 1845, the number of packages, and the net quantity of dry ice in each package. The information must be included with the description of the materials.

(5) Carbon dioxide, solid (dry ice), in quantities not exceeding 2.5 kg (5.5 pounds) per package and used as a refrigerant for the contents of the package is excepted from all other requirements of this subchapter if the requirements of paragraph (a) of this section are complied with and the package is marked "Carbon dioxide, solid" or "Dry ice", is marked with the name of the contents being cooled, and is marked with the net weight of the dry ice or an indication that the net weight is 2.5 kg (5.5 pounds) or less.

(d) Carbon dioxide, solid (dry ice), when used to refrigerate materials being shipped for diagnostic or treatment purposes (*e.g.*, frozen medical specimens), is excepted from the shipping paper and certification requirements of this subchapter if the requirements of paragraphs (a) and (c)(2) of this section are met and the package is marked "Carbon dioxide, solid" or "Dry ice" and is marked with an indication that the material being refrigerated is being transported for diagnostic or treatment purposes.

[73 FR 4718, Jan. 28, 2008]

§ 173.218 Fish meal or fish scrap.

(a) Except as provided in Column (7) of the HMT in § 172.101 of this subchapter, fish meal or fish scrap, containing at least 6%, but not more than 12% water, is authorized for transportation by vessel only when packaged as follows:

(1) Burlap (jute) bag;

(2) Multi-wall paper bag;

(3) Polyethylene-lined burlap or paper bag;

(4) Cargo tank;

(5) Portable tank;

(6) Rail car; or

(7) Freight container.

(b) [Reserved]

(c) When fish scrap or fish meal is offered for transportation by vessel in bulk in freight containers, the fish meal must contain at least 100 ppm of anti-oxident (ethoxyquin) at the time of shipment.

[Amdt. 173–224, 55 FR 52643, Dec. 21, 1990, as amended at 68 FR 45034, July 31, 2003]

§ 173.219 Life-saving appliances.

(a) A life-saving appliance, self-inflating or non-self-inflating, containing small quantities of hazardous materials that are required as part of the life-saving appliance must conform to the requirements of this section. Packagings must conform to the general packaging requirements of subpart B of this part but need not conform to the

ED_001691B_00009240

requirements of part 178 of this subchapter. The appliances must be packed, so that they cannot be accidentally activated and, except for life vests, the hazardous materials must be in inner packagings packed so as to prevent shifting within the outer packaging. The hazardous materials must be an integral part of the appliance and in quantities that do not exceed those appropriate for the actual appliance when in use.

(b) Life saving appliances may contain:

(1) Division 2.2 compressed or liquefied gases must be packaged in cylinders in accordance with the requirements of this subchapter;

(2) Signal devices (Class 1), which may include smoke and illumination signal flares;

(3) Electric storage batteries and lithium batteries (life-saving appliances containing lithium batteries must be packed in accordance with § 173.185 and Special Provisions A54 and A101 as applicable.);

(4) First aid or repair kits conforming to the applicable material and quantity limitations of § 173.161 of this subchapter;

(5) Strike-anywhere matches;

(6) For self-inflating life saving appliances only, cartridges power device of Division 1.4S, for purposes of the self-inflating mechanism provided that the quantity of explosives per appliance does not exceed 3.2 g; or

(7) Limited quantities of other hazardous materials.

(c) Hazardous materials in life saving appliances must be packaged as follows:

(1) Division 2.2 compressed or liquefied gases must be packaged in cylinders in accordance with the requirements of this subchapter;

(2) Signal devices (Class 1) must be in packagings that prevent them from being inadvertently activated;

(3) Strike-anywhere matches must be cushioned to prevent movement or friction in a metal or composition receptacle with a screw-type closure in a manner that prevents them from being inadvertently activated;

(4) Limited quantities of other hazardous materials must be packaged in accordance with the requirements of this subchapter; and

(5) Life-saving appliances containing no hazardous materials other than cylinders of Division 2.2 compressed or liquefied gases with no subsidiary risk, with a capacity not exceeding 120 mL, installed solely for the purpose of activating the appliance, are not subject to the provisions of this subchapter provided they are overpacked in rigid outer packagings with a maximum gross mass of 40 kg. For transportation by aircraft, such appliances must be transported as cargo and may not be carried onboard an aircraft by passengers or crewmembers in carry-on baggage, checked baggage, or on their person unless specifically excepted by § 175.10.

[69 FR 76158, Dec. 20, 2004, as amended at 72 FR 44950, Aug. 9, 2007; 73 FR 57006, Oct. 1, 2008; 78 FR 1089, Jan. 7, 2013; 79 FR 46039, Aug. 6, 2014]

§ 173.220 Internal combustion engines, self-propelled vehicles, mechanical equipment containing internal combustion engines, battery-powered equipment or machinery, fuel cell-powered equipment or machinery.

(a) *Applicability.* An internal combustion engine, self-propelled vehicle, mechanized equipment containing an internal combustion engine, a battery-powered vehicle or equipment, or a fuel cell-powered vehicle or equipment, or any combination thereof, is subject to the requirements of this subchapter when transported as cargo on a transport vehicle, vessel, or aircraft if—

(1) The engine contains a liquid or gaseous fuel. An engine may be considered as not containing fuel when the engine components and any fuel lines have been completely drained, sufficiently cleaned of residue, and purged of vapors to remove any potential hazard and the engine when held in any orientation will not release any liquid fuel;

(2) The fuel tank contains a liquid or gaseous fuel. A fuel tank may be considered as not containing fuel when the fuel tank and the fuel lines have been completely drained, sufficiently cleaned of residue, and purged of vapors to remove any potential hazard;

ED_001691B_00009240

(3) It is equipped with a wet battery (including a non-spillable battery), a sodium battery or a lithium battery; or

(4) Except as provided in paragraph (f)(1) of this section, it contains other hazardous materials subject to the requirements of this subchapter.

(b) *Requirements.* Unless otherwise excepted in paragraph (b)(4) of this section, vehicles, engines, and equipment are subject to the following requirements:

(1) *Flammable liquid fuel.* A fuel tank containing a flammable liquid fuel must be drained and securely closed, except that up to 500 mL (17 ounces) of residual fuel may remain in the tank, engine components, or fuel lines provided they are securely closed to prevent leakage of fuel during transportation. Self-propelled vehicles containing diesel fuel are excepted from the requirement to drain the fuel tanks, provided that sufficient ullage space has been left inside the tank to allow fuel expansion without leakage, and the tank caps are securely closed.

(2) *Flammable liquefied or compressed gas fuel.* (i) For transportation by motor vehicle, rail car or vessel, fuel tanks and fuel systems containing flammable liquefied or compressed gas fuel must be securely closed. For transportation by vessel, the requirements of §§176.78(k) and 176.905 of this subchapter apply.

(ii) For transportation by aircraft:

(A) Flammable gas-powered vehicles, machines, equipment or cylinders containing the flammable gas must be completely emptied of flammable gas. Lines from vessels to gas regulators, and gas regulators themselves, must also be drained of all traces of flammable gas. To ensure that these conditions are met, gas shut-off valves must be left open and connections of lines to gas regulators must be left disconnected upon delivery of the vehicle to the operator. Shut-off valves must be closed and lines reconnected at gas regulators before loading the vehicle aboard the aircraft; or alternatively;

(B) Flammable gas powered vehicles, machines or equipment, which have cylinders (fuel tanks) that are equipped with electrically operated valves, may be transported under the following conditions:

(*1*) The valves must be in the closed position and in the case of electrically operated valves, power to those valves must be disconnected;

(*2*) After closing the valves, the vehicle, equipment or machinery must be operated until it stops from lack of fuel before being loaded aboard the aircraft;

(*3*) In no part of the closed system shall the pressure exceed 5% of the maximum allowable working pressure of the system or 290 psig (2000 kPa), whichever is less; and

(*4*) There must not be any residual liquefied gas in the system, including the fuel tank.

(3) *Truck bodies or trailers on flat cars—flammable liquid or gas powered.* Truck bodies or trailers with automatic heating or refrigerating equipment of the flammable liquid type may be shipped with fuel tanks filled and equipment operating or inoperative, when used for the transportation of other freight and loaded on flat cars as part of a joint rail and highway movement, provided the equipment and fuel supply conform to the requirements of §177.834(l) of this subchapter.

(4) *Modal exceptions.* Quantities of flammable liquid fuel greater than 500 mL (17 ounces) may remain in the fuel tank in self-propelled vehicles and mechanical equipment only under the following conditions:

(i) For transportation by motor vehicle or rail car, the fuel tanks must be securely closed.

(ii) For transportation by vessel, the shipment must conform to §176.905 of this subchapter.

(iii) For transportation by aircraft, when carried in aircraft designed or modified for vehicle ferry operations when all the following conditions must be met:

(A) Authorization for this type operation has been given by the appropriate authority in the government of the country in which the aircraft is registered;

(B) Each vehicle is secured in an upright position;

(C) Each fuel tank is filled in a manner and only to a degree that will preclude spillage of fuel during loading, unloading, and transportation; and

(D) Each area or compartment in which a self-propelled vehicle is being

ED_001691B_00009240

transported is suitably ventilated to prevent the accumulation of fuel vapors.

(c) *Battery-powered or installed.* Batteries must be securely installed, and wet batteries must be fastened in an upright position. Batteries must be protected against a dangerous evolution of heat, short circuits, and damage to terminals in conformance with §173.159(a) and leakage; or must be removed and packaged separately under §173.159. Battery-powered vehicles, machinery or equipment including battery-powered wheelchairs and mobility aids are not subject to any other requirements of this subchapter except §173.21 of this subchapter when transported by rail, highway or vessel.

(d) *Lithium batteries.* Except as provided in §172.102, special provision A101, of this subchapter, vehicles, engines, and machinery powered by lithium metal batteries, that are transported with these batteries installed, are forbidden aboard passenger-carrying aircraft. Lithium batteries contained in vehicles, engines, or mechanical equipment must be securely fastened in the battery holder of the vehicle, engine, or mechanical equipment, and be protected in such a manner as to prevent damage and short circuits (e.g., by the use of non-conductive caps that cover the terminals entirely). Except for vehicles transported by highway, rail, or vessel with prototype or low production lithium batteries securely installed, each lithium battery must be of a type that has successfully passed each test in the UN Manual of Tests and Criteria (IBR, see §171.7), as specified in §173.185, unless approved by the Associate Administrator.

(e) *Fuel cells.* A fuel cell must be secured and protected in a manner to prevent damage to the fuel cell. Equipment (other than vehicles, engines or mechanical equipment) such as consumer electronic devices containing fuel cells (fuel cell cartridges) must be described as "Fuel cell cartridges contained in equipment" and transported in accordance with §173.230 of this subchapter.

(f) *Other hazardous materials.* (1) Items containing hazardous materials, such as fire extinguishers, compressed gas accumulators, safety devices, and other hazardous materials that are integral components of the motor vehicle, engine, or mechanical equipment, and that are necessary for the operation of the vehicle, engine, or mechanical equipment, or for the safety of its operator or passengers, must be securely installed in the motor vehicle, engine, or mechanical equipment. Such items are not otherwise subject to the requirements of this subchapter. Equipment (other than vehicles, engines, or mechanical equipment), such as consumer electronic devices containing lithium batteries, must be described as "Lithium metal batteries contained in equipment" or "Lithium ion batteries contained in equipment," as appropriate, and transported in accordance with §173.185 of this subchapter, and applicable special provisions. Equipment (other than vehicles, engines, or mechanical equipment), such as consumer electronic devices containing fuel cells (fuel cell cartridges), must be described as "Fuel cell cartridges contained in equipment" and transported in accordance with §173.230 of this subchapter.

(2) Other hazardous materials must be packaged and transported in accordance with the requirements of this subchapter.

(g) *Additional requirements for internal combustion engines and vehicles with certain electronic equipment when transported by aircraft or vessel.* When an internal combustion engine that is not installed in a vehicle or equipment is offered for transportation by aircraft or vessel, all fuel, coolant or hydraulic systems remaining in the engine must be drained as far as practicable, and all disconnected fluid pipes that previously contained fluid must be sealed with leak-proof caps that are positively retained. When offered for transportation by aircraft, vehicles equipped with theft-protection devices, installed radio communications equipment or navigational systems must have such devices, equipment or systems disabled.

(h) *Exceptions.* Except as provided in paragraph (f)(2) of this section, shipments made under the provisions of this section—

(1) Are not subject to any other requirements of this subchapter for

ED_001691B_00009240

transportation by motor vehicle or rail car; and

(2) Are not subject to the requirements of subparts D, E and F (marking, labeling and placarding, respectively) of part 172 of this subchapter or § 172.604 of this subchapter (emergency response telephone number) for transportation by vessel or aircraft. For transportation by aircraft, the provisions of § 173.159(b)(2) of this part as applicable, the provisions of § 173.230(f), as applicable, other applicable requirements of this subchapter, including shipping papers, emergency response information, notification of pilot-in-command, general packaging requirements, and the requirements specified in § 173.27 of this subchapter must be met. For transportation by vessel, additional exceptions are specified in § 176.905 of this subchapter.

[76 FR 3377, Jan. 19, 2011, as amended at 78 FR 1089, Jan. 7, 2013; 78 FR 60754, Oct. 2, 2013; 79 FR 46039, Aug. 6, 2014; 80 FR 1160, Jan. 8, 2015]

§ 173.221 Polymeric beads, expandable and Plastic molding compound.

(a) Non-bulk shipments of Polymeric beads (or granules), expandable *evolving flammable vapor* and Plastic molding compound *in dough, sheet or extruded rope form, evolving flammable vapor* must be packed in: metal (4A, 4B, or 4N), wooden (4C1 or 4C2), plywood (4D), fiberboard (4G), reconstituted wood (4F), plastic (4H1 or 4H2) boxes, plywood drums (1D) or fiber drums (1G) with sealed inner plastic liners; in vapor tight metal or plastic drums (1A1, 1A2, 1B1, 1B2, 1N1, 1N2, 1H1 or 1H2); in vapor tight metal or plastic jerricans (3A1, 3A2, 3B1, 3B2, 3H1, or 3H2); or packed in non-specification packagings when transported in dedicated vehicles or freight containers. The packagings need not conform to the requirements for package testing in part 178 of this subchapter, but must be capable of containing any evolving gases from the contents during normal conditions of transportation.

(b) Bulk shipments of Polymeric beads (or granules), expandable, *evolving flammable vapor* or Plastic molding compounds *in dough, sheet or extruded rope, evolving flammable vapor* may be packed in non-specification bulk packagings. Except for transportation by highway and rail, bulk packagings must be capable of containing any gases evolving from the contents during normal conditions of transportation.

(c) For transportation by vessel, the provisions of § 176.907 must be met.

[64 FR 10779, Mar. 5, 1999, as amended at 78 FR 1089, Jan. 7, 2013]

§ 173.222 Dangerous goods in equipment, machinery or apparatus.

Hazardous materials in machinery or apparatus are excepted from the specification packaging requirements of this subchapter when packaged according to this section. Hazardous materials in machinery or apparatus must be packaged in strong outer packagings, unless the receptacles containing the hazardous materials are afforded adequate protection by the construction of the machinery or apparatus. Each package must conform to the packaging requirements of subpart B of this part, except for the requirements in §§ 173.24(a)(1) and 173.27(e), and the following requirements:

(a) If the machinery or apparatus contains more than one hazardous material, the materials must not be capable of reacting dangerously together.

(b) The nature of the containment must be as follows—

(1) Damage to the receptacles containing the hazardous materials during transport is unlikely. However, in the event of damage to the receptacles containing the hazardous materials, no leakage of the hazardous materials from the machinery or apparatus is possible. A leakproof liner may be used to satisfy this requirement.

(2) Receptacles containing hazardous materials must be secured and cushioned so as to prevent their breakage or leakage and so as to control their movement within the machinery or apparatus during normal conditions of transportation. Cushioning material must not react dangerously with the content of the receptacles. Any leakage of the contents must not substantially impair the protective properties of the cushioning material.

(3) Receptacles for gases, their contents and filling densities must conform to the applicable requirements of

ED_001691B_00009240

this subchapter, unless otherwise approved by the Associate Administrator.

(c) The total net quantity of hazardous materials contained in one item of machinery or apparatus must not exceed the following:

(1) 1 kg (2.2 pounds) in the case of solids;

(2) 0.5 L (0.1 gallons) in the case of liquids;

(3) 0.5 kg (1.1 pounds) in the case of Division 2.2 gases. For transportation by aircraft, Division 2.2 gases with subsidiary risks and refrigerated liquefied gases are not authorized; and

(4) A total quantity of not more than the aggregate of that permitted in paragraphs (c)(1) through (c)(3) of this section, for each category of material in the package, when a package contains hazardous materials in two or more of the categories in paragraphs (c)(1) through (c)(3) of this section.

(d) Except for transportation by aircraft, when a package contains hazardous materials in two or more of the categories listed in paragraphs (c)(1) through (c)(3) of this section the total quantity required by §172.202(c) of this subchapter to be entered on the shipping paper must be either the aggregate quantity, or the estimated quantity, of all hazardous materials, expressed as net mass.

[64 FR 10779, Mar. 5, 1999, as amended at 64 FR 44428, Aug. 16, 1999; 66 FR 45379, Aug. 28, 2001; 70 FR 56098, Sept. 23, 2005; 71 FR 78633, Dec. 29, 2006; 74 FR 2259, Jan. 14, 2009]

§ 173.223 Packagings for certain flammable solids.

(a) Packagings for "Musk xylene," "5-tert-Butyl-2,4,6-trinitro-m-xylene," "Azodicarbonamide," or "Isosorbide-5-mononitrate," when offered for transportation or transported by rail, highway, or vessel, must conform to the general packaging requirements of subpart B of part 173, and to the requirements of part 178 of this subchapter at the Packing Group III performance level and may only be transported in the following packagings:

(1) Fiberboard box (4G) with a single inner plastic bag, and a maximum net mass of not more than 50 kg (110 lbs).

(2) Fiberboard box (4G) or fiber drum (1G), with a plastic inner packaging not exceeding 5 kg (11 lbs), and a maximum net mass of not more than 25 kg (55 lbs).

(3) Fiber drum (1G), and a maximum net mass of not more than 50 kg (110 lbs), that may be fitted with a coating or lining.

(b) [Reserved]

[Doc. No. 2002–13658, 68 FR 45035, July 31, 2003; 75 FR 5394, Feb. 2, 2010]

§ 173.224 Packaging and control and emergency temperatures for self-reactive materials.

(a) *General.* When the §172.101 table of this subchapter specifies that a Division 4.1 material be packaged in accordance with this section, only packagings which conform to the provisions of this section may be used. Each packaging must conform to the general packaging requirements of subpart B of this part and the applicable requirements of part 178 of this subchapter. Non-bulk packagings must meet Packing Group II performance levels. To avoid unnecessary confinement, metallic non-bulk packagings meeting Packing Group I are not authorized. Self-reactive materials which require temperature control are subject to the provisions of §173.21(f). Packagings required to bear a Class 1 subsidiary label must conform to §§173.60 through 173.62.

(b) *Self-Reactive Materials Table.* The Self-Reactive Materials Table specifies, by technical name, those self-reactive materials that are authorized for transportation and not subject to the approval provisions of §173.124(a)(2)(iii). A self-reactive material identified by technical name in the following table is authorized for transportation only if it conforms to all applicable provisions of the table. The column headings of the Self-Reactive Materials Table are as follows:

(1) *Technical name.* Column 1 specifies the technical name.

(2) *ID number.* Column 2 specifies the identification number which is used to identify the proper shipping name in the §172.101 table.

(3) *Concentration of self-reactive material.* Column 3 specifies the concentration (percent) limitations, if any, in mixtures or solutions for the self-reactive material. Limitations are given as minimums, maximums, or a range, as

ED_001691B_00009240

appropriate. A range includes the lower and upper limits (i.e., "53–100" means from, and including, 53 percent to, and including 100 percent).

(4) *Packing method.* Column 4 specifies the highest packing method which is authorized for the self-reactive material. A packing method corresponding to a smaller package size may be used, but a packing method corresponding to a larger package size may not be used. The Table of Packing Methods in § 173.225(d) defines the packing methods. Bulk packagings for Type F self-reactive substances are authorized by § 173.225(f) for IBCs and § 173.225(h) for bulk packagings other than IBCs. Additional bulk packagings are authorized if approved by the Associate Administrator.

(5) *Control temperature.* Column 5 specifies the control temperature in °C. Temperatures are specified only when temperature controls are required (see § 173.21(f)).

(6) *Emergency temperature.* Column 6 specifies the emergency temperature in °C. Temperatures are specified only when temperature controls are required (see § 173.21(f)).

(7) *Notes.* Column 7 specifies other applicable provisions, as set forth in notes following the table.

SELF-REACTIVE MATERIALS TABLE

Self-reactive substance (1)	Identification No. (2)	Concentration—(%) (3)	Packing method (4)	Control temperature—(°C) (5)	Emergency temperature (6)	Notes (7)
Acetone-pyrogallol copolymer 2-diazo-1-naphthol-5-sulphonate.	3228	100	OP8			
Azodicarbonamide formulation type B, temperature controlled.	3232	<100	OP5			1
Azodicarbonamide formulation type C	3224	<100	OP6			
Azodicarbonamide formulation type C, temperature controlled.	3234	<100	OP6			1
Azodicarbonamide formulation type D	3226	<100	OP7			
Azodicarbonamide formulation type D, temperature controlled.	3236	<100	OP7			1
2,2′-Azodi(2,4-dimethyl-4-methoxyvaleronitrile).	3236	100	OP7	−5	+ 5.	
2,2′-Azodi(2,4-dimethylvaleronitrile)	3236	100	OP7	+ 10	+ 15.	
2,2′-Azodi(ethyl 2-methylpropionate)	3235	100	OP7	+ 20	+ 25.	
1,1-Azodi(hexahydrobenzonitrile)	3226	100	OP7			
2,2-Azodi(isobutyronitrile)	3234	100	OP6	+ 40	+ 45.	
2,2′-Azodi(isobutyronitrile) as a water based paste.	3224	≤50	OP6			
2,2-Azodi(2-methylbutyronitrile)	3236	100	OP7	+ 35	+ 40.	
Benzene-1,3-disulphonylhydrazide, as a paste.	3226	52	OP7			
Benzene sulphohydrazide	3226	100	OP7			
4-(Benzyl(ethyl)amino)-3-ethoxybenzenediazonium zinc chloride.	3226	100	OP7			
4-(Benzyl(methyl)amino)-3-ethoxybenzenediazonium zinc chloride.	3236	100	OP7	+ 40	+ 45.	
3-Chloro-4-diethylaminobenzenediazonium zinc chloride.	3226	100	OP7			
2-Diazo-1-Naphthol sulphonic acid ester mixture.	3226	<100	OP7			4
2-Diazo-1-Naphthol-4-sulphonyl chloride	3222	100	OP5			
2-Diazo-1-Naphthol-5-sulphonyl chloride	3222	100	OP5			
2,5-Dibutoxy-4-(4-morpholinyl)-Benzenediazonium, tetrachlorozincate (2:1).	3228	100	OP8			
2,5-Diethoxy-4-morpholinobenzenediazonium zinc chloride.	3236	67–100	OP7	+ 35	+ 40.	
2,5-Diethoxy-4-morpholinobenzenediazonium zinc chloride.	3236	66	OP7	+ 40	+ 45.	
2,5-Diethoxy-4-morpholinobenzenediazonium tetrafluoroborate.	3236	100	OP7	+ 30	+ 35.	

ED_001691B_00009240

SELF-REACTIVE MATERIALS TABLE—Continued

Self-reactive substance (1)	Identification No. (2)	Concentration—(%) (3)	Packing method (4)	Control temperature—(°C) (5)	Emergency temperature (6)	Notes (7)
2,5-Diethoxy-4-(phenylsulphonyl)benzenediazonium zinc chloride.	3236	67	OP7	+ 40	+ 45.	
2,5-Diethoxy-4-(4-morpholinyl)-benzenediazonium sulphate.	3226	100	OP7			
Diethylene glycol bis(allyl carbonate) + Diisopropylperoxydicarbonate.	3237	≥88 + ≤12	OP8	−10	0.	
2,5-Dimethoxy-4-(4-methylphenylsulphony)benzenediazonium zinc chloride.	3236	79	OP7	+ 40	+ 45.	
4-Dimethylamino-6-(2-dimethylaminoethoxy)toluene-2-diazonium zinc chloride.	3236	100	OP7	+ 40	+ 45.	
4-(Dimethylamino)-benzenediazonium trichlorozincate (-1).	3228	100	OP8			
N,N′-Dinitroso-N, N′-dimethylterephthalamide, as a paste.	3224	72	OP6			
N,N′-Dinitrosopentamethylenetetramine	3224	82	OP6			2
Diphenyloxide-4,4′-disulphohydrazide	3226	100	OP7			
Diphenyloxide-4,4′-disulphonylhydrazide	3226	100	OP7			
4-Dipropylaminobenzenediazonium zinc chloride.	3226	100	OP7			
2-(N,N-Ethoxycarbonylphenylamino)-3-methoxy-4-(N-methyl-N-cyclohexylamino)benzenediazonium zinc chloride.	3236	63–92	OP7	+ 40	+ 45.	
2-(N,N-Ethoxycarbonylphenylamino)-3-methoxy-4-(N-methyl-N-cyclohexylamino)benzenediazonium zinc chloride.	3236	62	OP7	+ 35	+ 40.	
N-Formyl-2-(nitromethylene)-1,3-perhydrothiazine.	3236	100	OP7	+ 45	+ 50.	
2-(2-Hydroxyethoxy)-1-(pyrrolidin-1-yl)benzene-4-diazonium zinc chloride.	3236	100	OP7	+ 45	+ 50.	
3-(2-Hydroxyethoxy)-4-(pyrrolidin-1-yl)benzenediazonium zinc chloride.	3236	100	OP7	+ 40	+ 45.	
2-(N,N-Methylaminoethylcarbonyl)-4-(3,4-dimethyl-phenylsulphonyl)benzene diazonium zinc chloride.	3236	96	OP7	+ 45	+ 50.	
4-Methylbenzenesulphonylhydrazide	3226	100	OP7			
3-Methyl-4-(pyrrolidin-1-yl)benzenediazonium tetrafluoroborate.	3234	95	OP6	+ 45	+ 50.	
4-Nitrosophenol	3236	100	OP7	+ 35	+ 40.	
Self-reactive liquid, sample	3223		OP2			3
Self-reactive liquid, sample, temperature control.	3233		OP2			3
Self-reactive solid, sample	3224		OP2			3
Self-reactive solid, sample, temperature control.	3234		OP2			3
Sodium 2-diazo-1-naphthol-4-sulphonate	3226	100	OP7			
Sodium 2-diazo-1-naphthol-5-sulphonate	3226	100	OP7			
Tetramine palladium (II) nitrate	3234	100	OP6	+ 30	+ 35.	

NOTES: 1. The emergency and control temperatures must be determined in accordance with § 173.21(f).
2. With a compatible diluent having a boiling point of not less than 150 °C.
3. Samples may only be offered for transportation under the provisions of paragraph (c)(3) of this section.
4. This entry applies to mixtures of esters of 2-diazo-1-naphthol-4-sulphonic acid and 2-diazo-1-naphthol-5-sulphonic acid.

(c) *New self-reactive materials, formulations and samples.* (1) Except as provided for samples in paragraph (c)(3) of this section, no person may offer, accept for transportation, or transport a self-reactive material which is not identified by technical name in the Self-Reactive Materials Table of this section, or a formulation of one or more self-reactive materials which are identified by technical name in the table, unless the self-reactive material is assigned a generic type and shipping description and is approved by the Associate Administrator under the provisions of § 173.124(a)(2)(iii).

ED_001691B_00009240

(2) Except as provided by an approval issued under §173.124(a)(2)(iii), intermediate bulk and bulk packagings are not authorized.

(3) *Samples.* Samples of new self-reactive materials or new formulations of self-reactive materials identified in the Self-Reactive Materials Table in paragraph (b) of this section, for which complete test data are not available, and which are to be transported for further testing or product evaluation, may be assigned an appropriate shipping description for Self-reactive materials Type C, packaged and offered for transportation under the following conditions:

(i) Data available to the person offering the material for transportation must indicate that the sample would pose a level of hazard no greater than that of a self-reactive material Type B and that the control temperature, if any, is sufficiently low to prevent any dangerous decomposition and sufficiently high to prevent any dangerous phase separation;

(ii) The sample must be packaged in accordance with packing method OP2;

(iii) Packages of the self-reactive material may be offered for transportation and transported in a quantity not to exceed 10 kg (22 pounds) per transport vehicle; and

(iv) One of the following shipping descriptions must be assigned:

(A) Self-reactive, liquid, type C, 4.1, UN3223.

(B) Self-reactive, solid, type C, 4.1, UN3224.

(C) Self-reactive, liquid, type C, temperature controlled, 4.1, UN3233.

(D) Self-reactive, solid, type C, temperature controlled, 4.1, UN3234.

[Amdt. 173–241, 59 FR 67511, Dec. 29, 1994, as amended by Amdt. 173–242, 60 FR 26806, May 18, 1995; Amdt. 173–246, 60 FR 49110, Sept. 21, 1995; Amdt. 173–256, 61 FR 51338, Oct. 1, 1996; Amdt. 173–261, 62 FR 24734, 24735, May 6, 1997; 62 FR 45702, Aug. 28, 1997; 64 FR 10779, Mar. 5, 1999; 65 FR 58630, Sept. 29, 2000; 66 FR 33431, June 21, 2001; 66 FR 45379, Aug. 28, 2001; 68 FR 45035, July 31, 2003; 69 FR 76159, Dec. 20, 2004; 71 FR 78633, Dec. 29,2006]

§ 173.225 Packaging requirements and other provisions for organic peroxides.

(a) *General.* When the §172.101 table specifies that an organic peroxide must be packaged under this section, the organic peroxide must be packaged and offered for transportation in accordance with the provisions of this section. Each packaging must conform to the general requirements of subpart B of part 173 and to the applicable requirements of part 178 of this subchapter. Non-bulk packagings must meet Packing Group II performance levels. To avoid unnecessary confinement, metallic non-bulk packagings meeting Packing Group I are not authorized. No used material, other than production residues or regrind from the same production process, may be used in plastic packagings. Organic peroxides that require temperature control are subject to the provisions of §173.21(f). When an IBC or bulk packaging is authorized and meets the requirements of paragraph (f) or (h) of this section, respectively, lower control temperatures than those specified for non-bulk packaging may be required. An organic peroxide not identified in paragraph (c), (e), or (g) of this section by technical name, or not assigned to a generic type in accordance with the provisions in paragraph (b)(3) of this section, must conform to the provisions of paragraph (c) of §173.128.

(b) *New organic peroxides, formulations and samples.* (1) Except as provided for samples in paragraph (b)(2) of this section, no person may offer for transportation an organic peroxide that is not identified by technical name in the Organic Peroxides Table, Organic Peroxide IBC Table, or the Organic Peroxide Portable Tank Table of this section, or a formulation of one or more organic peroxides that are identified by technical name in one of those tables, unless the organic peroxide is assigned a generic type and shipping description and is approved by the Associate Administrator under the provisions of §173.128(d) of this subchapter.

(2) *Samples.* Samples of new organic peroxides or new formulations of organic peroxides identified in the Organic Peroxides Table in paragraph (c) of this section, for which complete test data are not available, and that are to be transported for further testing or product evaluation, may be assigned an appropriate shipping description for organic peroxide Type C, packaged and

ED_001691B_00009240

offered for transportation, under the following conditions:

(i) Data available to the person offering the material for transportation must indicate that the sample would pose a level of hazard no greater than that of an organic peroxide Type B and that the control temperature, if any, is sufficiently low to prevent any dangerous decomposition and sufficiently high to prevent any dangerous phase separation;

(ii) The sample must be packaged in accordance with packing method OP2, for a liquid or solid, respectively;

(iii) Packages of the organic peroxide may be offered for transportation and transported in a quantity not to exceed 10 kg (22 pounds) per transport vehicle; and

(iv) One of the following shipping descriptions must be assigned:

(A) Organic peroxide Type C, liquid, 5.2, UN 3103;

(B) Organic peroxide Type C, solid, 5.2, UN 3104;

(C) Organic peroxide Type C, liquid, temperature controlled, 5.2, UN 3113; or

(D) Organic peroxide Type C, solid, temperature controlled, 5.2, UN 3114.

(3) *Mixtures.* Mixtures of organic peroxides individually identified in the Organic Peroxides Table in paragraph (c) of this section may be classified as the same type of organic peroxide as that of the most dangerous component and be transported under the conditions for transportation given for this type. If the stable components form a thermally less stable mixture, the SADT of the mixture must be determined and the new control and emergency temperature derived under the provisions of § 173.21(f).

(c) *Organic peroxides table.* The following Organic Peroxides Table specifies by technical name those organic peroxides that are authorized for transportation and not subject to the approval provisions of § 173.128 of this part. An organic peroxide identified by technical name in the following table is authorized for transportation only if it conforms to all applicable provisions of the table. The column headings of the Organic Peroxides Table are as follows:

(1) *Technical name.* The first column specifies the technical name.

(2) *ID number.* The second column specifies the identification (ID) number which is used to identify the proper shipping name in the § 172.101 table. The word "EXEMPT" appearing in the column denotes that the material is not regulated as an organic peroxide.

(3) *Concentration of organic peroxide.* The third column specifies concentration (mass percent) limitations, if any, in mixtures or solutions for the organic peroxide. Limitations are given as minimums, maximums, or a range, as appropriate. A range includes the lower and upper limits (*i.e.*, "53–100" means from, and including, 53% to, and including 100%). See introductory paragraph of § 172.203(k) of this subchapter for additional description requirements for an organic peroxide that may qualify for more than one generic listing, depending on its concentration.

(4) *Concentration of diluents.* The fourth column specifies the type and concentration (mass percent) of diluent or inert solid, when required. Other types and concentrations of diluents may be used if approved by the Associate Administrator.

(i) The required mass percent of "Diluent type A" is specified in column 4a. A diluent type A is an organic liquid that does not detrimentally affect the thermal stability or increase the hazard of the organic peroxide and with a boiling point not less than 150 °C at atmospheric pressure. Type A diluents may be used for desensitizing all organic peroxides.

(ii) The required mass percent of "Diluent type B" is specified in column 4b. A diluent type B is an organic liquid which is compatible with the organic peroxide and which has a boiling point, at atmospheric pressure, of less than 150 °C (302 °F) but at least 60 °C (140 °F), and a flash point greater than 5 °C (41 °F). Type B diluents may be used for desensitizing all organic peroxides, when specified in the organic peroxide tables, provided that the boiling point is at least 60 °C (140 °F) above the SADT of the peroxide in a 50 kg (110 lbs) package. A type A diluent may be used to replace a type B diluent in equal concentration.

(iii) The required mass percent of "Inert solid" is specified in column 4c. An inert solid is a solid that does not

ED_001691B_00009240

detrimentally affect the thermal stability or hazard of the organic peroxide.

(5) *Concentration of water.* Column 5 specifies, in mass percent, the minimum amount of water, if any, which must be in formulation.

(6) *Packing method.* Column 6 specifies the highest packing method (largest packaging capacity) authorized for the organic peroxide. Lower numbered packing methods (smaller packaging capacities) are also authorized. For example, if OP3 is specified, then OP2 and OP1 are also authorized. The Table of Packing Methods in paragraph (d) of this section defines the non-bulk packing methods.

(7) *Temperatures.* Column 7a specifies the control temperature. Column 7b specifies the emergency temperature. Temperatures are specified only when temperature controls are required. (See § 173.21(f)).

(8) *Notes.* Column 8 specifies other applicable provisions, as set forth in notes following the table.

ORGANIC PEROXIDE TABLE

Technical name	ID number	Concentration (mass %)	Diluent (mass %)			Water (mass %)	Packing method	Temperature (°C)		Notes
			A	B	I			Control	Emergency	
(1)	(2)	(3)	(4a)	(4b)	(4c)	(5)	(6)	(7a)	(7b)	(8)
Acetyl acetone peroxide	UN3105	≤42	≥48			≥8	OP7			2
Acetyl acetone peroxide [as a paste].	UN3106	≤32					OP7			21
Acetyl cyclohexanesulfonyl peroxide.	UN3112	≤82				≥12	OP4	−10	0.	
Acetyl cyclohexanesulfonyl peroxide.	UN3115	≤32		≥68			OP7	−10	0.	
tert-Amyl hydroperoxide	UN3107	≤88	≥6			≥6	OP8.			
tert-Amyl peroxyacetate	UN3105	≤62	≥38				OP7.			
tert-Amyl peroxybenzoate.	UN3103	≤100					OP5.			
tert-Amyl peroxy-2-ethylhexanoate.	UN3115	≤100					OP7	+ 20	+ 25.	
tert-Amyl peroxy-2-ethylhexyl carbonate.	UN3105	≤100					OP7.			
tert-Amyl peroxy isopropyl carbonate.	UN3103	≤77	≥23				OP5.			
tert-Amyl peroxyneodecanoate.	UN3115	≤77		≥23			OP7	0	+ 10.	
tert-Amyl peroxyneodecanoate.	3119	≤47	≥53				OP8	0	+ 10.	
tert-Amyl peroxypivalate	UN3113	≤77		≥23			OP5	+ 10	+ 15.	
tert-Amyl peroxypivalate	3119	≤32	≥68				OP8	+ 10	+ 15.	
tert-Amyl peroxy-3,5,5-trimethylhexanoate.	3105	≤100					OP7.			
tert-Butyl cumyl peroxide	UN3107	>42–100					OP8			9
tert-Butyl cumyl peroxide	UN3108	≤52			≥48		OP8			9
n-Butyl-4,4-di-(tert-butylperoxy)valerate.	UN3103	>52–100					OP5.			
n-Butyl-4,4-di-(tert-butylperoxy)valerate.	UN3108	≤52			≥48		OP8.			
tert-Butyl hydroperoxide	UN3103	>79–90				≥10	OP5			13
tert-Butyl hydroperoxide	UN3105	≤80	≥20				OP7			4, 13
tert-Butyl hydroperoxide	UN3107	≤79				>14	OP8			13, 16
tert-Butyl hydroperoxide	UN3109	≤72				≥28	OP8			13
tert-Butyl hydroperoxide [and] Di-tert-butylperoxide.	UN3103	<82 + >9				≥7	OP5			13
tert-Butyl monoperoxymaleate.	UN3102	>52–100					OP5.			
tert-Butyl monoperoxymaleate.	UN3103	≤52	≥48				OP6.			
tert-Butyl monoperoxymaleate.	UN3108	≤52			≥48		OP8.			

ED_001691B_00009240

ORGANIC PEROXIDE TABLE—Continued

Technical name	ID number	Concentration (mass %)	Diluent (mass %)			Water (mass %)	Packing method	Temperature (°C)		Notes
			A	B	I			Control	Emergency	
(1)	(2)	(3)	(4a)	(4b)	(4c)	(5)	(6)	(7a)	(7b)	(8)
tert-Butyl monoperoxymaleate [as a paste].	UN3108	≤52					OP8.			
tert-Butyl peroxyacetate	UN3101	>52–77	≥23				OP5.			
tert-Butyl peroxyacetate	UN3103	>32–52	≥48				OP6.			
tert-Butyl peroxyacetate	UN3109	≤32		≥68			OP8.			
tert-Butyl peroxybenzoate.	UN3103	>77–100					OP5.			
tert-Butyl peroxybenzoate.	UN3105	>52–77	≥23				OP7			1
tert-Butyl peroxybenzoate.	UN3106	≤52			≥48		OP7.			
tert-Butyl peroxybenzoate.	3109	≤32	≥68				OP8.			
tert-Butyl peroxybutyl fumarate.	UN3105	≤52	≥48				OP7.			
tert-Butyl peroxycrotonate.	UN3105	≤77	≥23				OP7.			
tert-Butyl peroxydiethylacetate.	UN3113	≤100					OP5	+ 20	+ 25.	
tert-Butyl peroxy-2-ethylhexanoate.	UN3113	>52–100					OP6	+ 20	+ 25.	
tert-Butyl peroxy-2-ethylhexanoate.	UN3117	>32–52		≥48			OP8	+ 30	+ 35.	
tert-Butyl peroxy-2-ethylhexanoate.	UN3118	≤52			≥48		OP8	+ 20	+ 25.	
tert-Butyl peroxy-2-ethylhexanoate.	UN3119	≤32		≥68			OP8	+ 40	+ 45.	
tert-Butyl peroxy-2-ethylhexanoate [and] 2,2-di-(tert-Butylperoxy)butane.	UN3106	≤12 + ≤14	≥14		≥60		OP7.			
tert-Butyl peroxy-2-ethylhexanoate [and] 2,2-di-(tert-Butylperoxy)butane.	UN3115	≤31 + ≤36		≥33			OP7	+ 35	+ 40.	
tert-Butyl peroxy-2-ethylhexylcarbonate.	UN3105	≤100					OP7.			
tert-Butyl peroxyisobutyrate.	UN3111	>52–77		≥23			OP5	+ 15	+ 20.	
tert-Butyl peroxyisobutyrate.	UN3115	≤52		≥48			OP7	+ 15	+ 20.	
tert-Butylperoxy isopropylcarbonate.	UN3103	≤77	≥23				OP5.			
1-(2-tert-Butylperoxy isopropyl)-3-isopropenylbenzene.	UN3105	≤77	≥23				OP7.			
1-(2-tert-Butylperoxy isopropyl)-3-isopropenylbenzene.	UN3108	≤42			≥58		OP8.			
tert-Butyl peroxy-2-methylbenzoate.	UN3103	≤100					OP5.			
tert-Butyl peroxyneodecanoate.	UN3115	>77–100					OP7	−5	+ 5.	
tert-Butyl peroxyneodecanoate.	UN3115	≤77		≥23			OP7	0	+ 10.	
tert-Butyl peroxyneodecanoate [as a stable dispersion in water].	UN3119	≤52					OP8	0	+ 10.	
tert-Butyl peroxyneodecanoate [as a stable dispersion in water (frozen)].	UN3118	≤42					OP8	0	+ 10.	
tert-Butyl peroxyneodecanoate.	UN3119	≤32	≥68				OP8	0	+ 10.	

ED_001691B_00009240

ORGANIC PEROXIDE TABLE—Continued

Technical name	ID number	Concentration (mass %)	Diluent (mass %)			Water (mass %)	Packing method	Temperature (°C)		Notes
			A	B	I			Control	Emergency	
(1)	(2)	(3)	(4a)	(4b)	(4c)	(5)	(6)	(7a)	(7b)	(8)
tert-Butyl peroxyneoheptanoate.	UN3115	≤77	≥23				OP7	0	+ 10.	
tert-Butyl peroxyneoheptanoate [as a stable dispersion in water].	UN3117	≤42					OP8	0	+ 10.	
tert-Butyl peroxypivalate	UN3113	>67–77	≥23				OP5	0	+ 10.	
tert-Butyl peroxypivalate	UN3115	>27–67		≥33			OP7	0	+ 10.	
tert-Butyl peroxypivalate	UN3119	≤27		≥73			OP8	+ 30	+ 35.	
tert-Butylperoxy stearylcarbonate.	UN3106	≤100					OP7.			
tert-Butyl peroxy-3,5,5-trimethylhexanoate.	UN3105	>32–100					OP7.			
tert-Butyl peroxy-3,5,5-trimethlyhexanoate.	3106	≤42			≥58		OP7.			
tert-Butyl peroxy-3,5,5-trimethylhexanoate.	UN3109	≤32		≥68			OP8.			
3-Chloroperoxybenzoic acid.	UN3102	>57–86			≥14		OP1.			
3-Chloroperoxybenzoic acid.	UN3106	≤57			≥3	≥40	OP7.			
3-Chloroperoxybenzoic acid.	UN3106	≤77			≥6	≥17	OP7.			
Cumyl hydroperoxide	UN3107	>90–98	≤10				OP8			13
Cumyl hydroperoxide	UN3109	≤90	≥10				OP8			13, 15
Cumyl peroxyneodecanoate.	3115	≤87	≥13				OP7	−10	0.	
Cumyl peroxyneodecanoate.	UN3115	≤77		≥23			OP7	−10	0.	
Cumyl peroxyneodecanoate [as a stable dispersion in water].	UN3119	≤52					OP8	−10	0.	
Cumyl peroxyneoheptanoate.	UN3115	≤77	≥23				OP7	−10	0.	
Cumyl peroxypivalate	UN3115	≤77		≥23			OP7	−5	+ 5.	
Cyclohexanone peroxide(s).	UN3104	≤91				≥9	OP6			13
Cyclohexanone peroxide(s).	UN3105	≤72	≥28				OP7			5
Cyclohexanone peroxide(s) [as a paste].	UN3106	≤72					OP7			5, 21
Cyclohexanone peroxide(s).	Exempt	≤32		>68			Exempt			29
Diacetone alcohol peroxides.	UN3115	≤57		≥26		≥8	OP7	+ 40	+ 45	5
Diacetyl peroxide	UN3115	≤27		≥73			OP7	+ 20	+ 25	8,13
Di-tert-amyl peroxide	UN3107	≤100					OP8.			
([3R- (3R, 5aS, 6S, 8aS, 9R, 10R, 12S, 12aR**)]-Decahydro-10-methoxy-3, 6, 9-trimethyl-3, 12-epoxy-12H-pyrano [4, 3- j]-1, 2-benzodioxepin).	UN3106	≤100					OP7.			
2,2-Di-(tert-amylperoxy)-butane.	3105	≤57	≥43				OP7.			
1,1-Di-(tert-amylperoxy)cyclohexane.	UN3103	≤82	≥18				OP6.			
Dibenzoyl peroxide	UN3102	>51–100			≤48		OP2			3
Dibenzoyl peroxide	UN3102	>77–94				≥6	OP4			3
Dibenzoyl peroxide	UN3104	≤77				≥23	OP6.			
Dibenzoyl peroxide	UN3106	≤62			≥28	≥10	OP7.			
Dibenzoyl peroxide [as a paste].	UN3106	>52–62					OP7			21
Dibenzoyl peroxide	UN3106	>35–52			≥48		OP7.			

ED_001691B_00009240

ORGANIC PEROXIDE TABLE—Continued

Technical name	ID number	Concentration (mass %)	Diluent (mass %)			Water (mass %)	Packing method	Temperature (°C)		Notes
			A	B	I			Control	Emergency	
(1)	(2)	(3)	(4a)	(4b)	(4c)	(5)	(6)	(7a)	(7b)	(8)
Dibenzoyl peroxide	UN3107	>36–42	≥18			≤40	OP8.			
Dibenzoyl peroxide [as a paste].	UN3108	≤56.5				≥15	OP8.			
Dibenzoyl peroxide [as a paste].	UN3108	≤52					OP8			21
Dibenzoyl peroxide [as a stable dispersion in water].	UN3109	≤42					OP8.			
Dibenzoyl peroxide	Exempt	≤35			≥65		Exempt			29
Di-(4-tert-butylcyclohexyl)peroxydicarbonate.	UN3114	≤100					OP6	+ 30	+ 35.	
Di-(4-tert-butylcyclohexyl)peroxydicarbonate [as a stable dispersion in water].	UN3119	≤42					OP8	+ 30	+ 35.	
Di-tert-butyl peroxide	UN3107	>52–100					OP8.			
Di-tert-butyl peroxide	UN3109	≤52		≥48			OP8			24
Di-tert-butyl peroxyazelate.	UN3105	≤52	≥48				OP7.			
2,2-Di-(tert-butylperoxy)butane.	UN3103	≤52	≥48				OP6.			
1,6-Di-(tert-butylperoxycarbonyloxy)hexane.	UN3103	≤72	≥28				OP5.			
1,1-Di-(tert-butylperoxy)cyclohexane.	UN3101	>80–100					OP5.			
1,1-Di-(tert-butylperoxy)cyclohexane.	UN3103	>52–80	≥20				OP5.			
1,1-Di-(tert-butylperoxy)-cyclohexane.	3103	≤72		≥28			OP5			30
1,1-Di-(tert-butylperoxy)cyclohexane.	UN3105	>42–52	≥48				OP7.			
1,1-Di-(tert-butylperoxy)cyclohexane.	UN3106	≤42	≥13		≥45		OP7.			
1,1-Di-(tert-butylperoxy)cyclohexane.	UN3107	≤27	≥25				OP8			22
1,1-Di-(tert-butylperoxy)cyclohexane.	UN3109	≤42	≥58				OP8.			
1,1-Di-(tert-Butylperoxy) cyclohexane.	3109	≤37	≥63				OP8.			
1,1-Di-(tert-butylperoxy)cyclohexane.	UN3109	≤25	≥25	≥50			OP8.			
1,1-Di-(tert-butylperoxy)cyclohexane.	UN3109	≤13	≥13	≥74			OP8.			
Di-n-butyl peroxydicarbonate.	UN3115	>27–52		≥48			OP7	−15	−5.	
Di-n-butyl peroxydicarbonate.	UN3117	≤27		≥73			OP8	−10	0.	
Di-n-butyl peroxydicarbonate [as a stable dispersion in water (frozen)].	UN3118	≤42					OP8	−15	−5.	
Di-sec-butyl peroxydicarbonate.	UN3113	>52–100					OP4	−20	−10	6
Di-sec-butyl peroxydicarbonate.	UN3115	≤52		≥48			OP7	−15	−5.	

ED_001691B_00009240

ORGANIC PEROXIDE TABLE—Continued

Technical name	ID number	Concentration (mass %)	Diluent (mass %)			Water (mass %)	Packing method	Temperature (°C)		Notes
			A	B	I			Control	Emergency	
(1)	(2)	(3)	(4a)	(4b)	(4c)	(5)	(6)	(7a)	(7b)	(8)
Di-(tert-butylperoxyisopropyl) benzene(s).	UN3106	>42–100			≤57		OP7			1, 9
Di-(tert-butylperoxyisopropyl) benzene(s).	Exempt	≤42			≥58		Exempt.			
Di-(tert-butylperoxy)phthalate.	UN3105	>42–52	≥48				OP7.			
Di-(tert-butylperoxy)phthalate [as a paste].	UN3106	≤52					OP7			21
Di-(tert-butylperoxy)phthalate.	UN3107	≤42	≥58				OP8.			
2,2-Di-(tert-butylperoxy)propane.	UN3105	≤52	≥48				OP7.			
2,2-Di-(tert-butylperoxy)propane.	UN3106	≤42	≥13		≥45		OP7.			
1,1-Di-(tert-butylperoxy)-3,3,5-trimethylcyclohexane.	UN3101	>90–100					OP5.			
1,1-Di-(tert-butylperoxy)-3,3,5-trimethylcyclohexane.	UN3103	>57–90	≥10				OP5.			
1,1-Di-(tert-butylperoxy)-3,3,5-trimethylcyclohexane.	UN3103	≤77		≥23			OP5.			
1,1-Di-(tert-butylperoxy)-3,3,5-trimethylcyclohexane.	UN3103	≤90		≥10			OP5			30
1,1-Di-(tert-butylperoxy)-3,3,5-trimethylcyclohexane.	UN3110	≤57			≥43		OP8.			
1,1-Di-(tert-butylperoxy)-3,3,5-trimethylcyclohexane.	UN3107	≤57	≥43				OP8.			
1,1-Di-(tert-butylperoxy)-3,3,5-trimethylcyclohexane.	UN3107	≤32	≥26	≥42			OP8.			
Dicetyl peroxydicarbonate.	UN3116	≤100					OP7	+ 30	+ 35.	
Dicetyl peroxydicarbonate [as a stable dispersion in water].	UN3119	≤42					OP8	+ 30	+ 35.	
Di-4-chlorobenzoyl peroxide.	UN3102	≤77				≥23	OP5.			
Di-4-chlorobenzoyl peroxide.	Exempt	≤32			≥68		Exempt			29
Di-2,4-dichlorobenzoyl peroxide [as a paste].	UN3118	≤52				OP8	+ 20	+ 25.		
Di-4-chlorobenzoyl peroxide [as a paste].	UN3106	≤52					OP7			21
Dicumyl peroxide	UN3110	>52–100			≤48		OP8			9
Dicumyl peroxide	Exempt	≤52			≥48		Exempt			29
Dicyclohexyl peroxydicarbonate.	UN3112	>91–100					OP3	+ 10	+ 15.	
Dicyclohexyl peroxydicarbonate.	UN3114	≤91				≥9	OP5	+ 10	+ 15.	
Dicyclohexyl peroxydicarbonate [as a stable dispersion in water].	UN3119	≤42					OP8	+ 15	+ 20.	
Didecanoyl peroxide	UN3114	≤100					OP6	+ 30	+ 35.	
2,2-Di-(4,4-di(tert-butylperoxy)cyclohexyl)propane.	UN3106	≤42			≥58		OP7.			

ED_001691B_00009240

ORGANIC PEROXIDE TABLE—Continued

Technical name	ID number	Concentration (mass %)	Diluent (mass %)			Water (mass %)	Packing method	Temperature (°C)		Notes
			A	B	I			Control	Emergency	
(1)	(2)	(3)	(4a)	(4b)	(4c)	(5)	(6)	(7a)	(7b)	(8)
2,2-Di-(4,4-di(tert-butylperoxy)cyclohexyl)propane.	UN3107	≤22		≥78			OP8.			
Di-2,4-dichlorobenzoyl peroxide.	UN3102	≤77				≥23	OP5.			
Di-2,4-dichlorobenzoyl peroxide [as a paste with silicone oil].	UN3106	≤52					OP7.			
Di-(2-ethoxyethyl) peroxydicarbonate.	UN3115	≤52		≥48			OP7	−10	0.	
Di-(2-ethylhexyl) peroxydicarbonate.	UN3113	>77–100					OP5	−20	−10.	
Di-(2-ethylhexyl) peroxydicarbonate.	UN3115	≤77		≥23			OP7	−15	−5.	
Di-(2-ethylhexyl) peroxydicarbonate [as a stable dispersion in water].	3119	≤62					OP8	−15	−5.	
Di-(2-ethylhexyl) peroxydicarbonate [as a stable dispersion in water].	UN3119	≤52					OP8	−15	−5.	
Di-(2-ethylhexyl) peroxydicarbonate [as a stable dispersion in water (frozen)].	UN3120	≤52					OP8	−15	−5.	
2,2-Dihydroperoxypropane.	UN3102	≤27			≥73		OP5.			
Di-(1-hydroxycyclohexyl)peroxide.	UN3106	≤100					OP7.			
Diisobutyryl peroxide	UN3111	>32–52		≥48			OP5	−20	−10.	
Diisobutyryl peroxide	UN3115	≤32		≥68			OP7	−20	−10.	
Diisopropylbenzene dihydroperoxide.	UN3106	≤82	≥5			≥5	OP7			17
Diisopropyl peroxydicarbonate.	UN3112	>52–100					OP2	−15	−5.	
Diisopropyl peroxydicarbonate.	UN3115	≤52		≥48			OP7	−20	−10.	
Diisopropyl peroxydicarbonate.	UN3115	≤32	≥68				OP7	−15	−5.	
Dilauroyl peroxide	UN3106	≤100					OP7.			
Dilauroyl peroxide [as a stable dispersion in water].	UN3109	≤42					OP8.			
Di-(3-methoxybutyl) peroxydicarbonate.	UN3115	≤52		≥48			OP7	−5	+5.	
Di-(2-methylbenzoyl)peroxide.	UN3112	≤87				≥13	OP5	+30	+35.	
Di-(4-methylbenzoyl)peroxide [as a paste with silicone oil].	UN3106	≤52					OP7.			
Di-(3-methylbenzoyl) peroxide + Benzoyl (3-methylbenzoyl) peroxide + Dibenzoyl peroxide.	UN3115	≤20 + ≤18 + ≤4		≥58			OP7	+35	+40.	
2,5-Dimethyl-2,5-di-(benzoylperoxy)hexane.	UN3102	>82–100					OP5.			
2,5-Dimethyl-2,5-di-(benzoylperoxy)hexane.	UN3106	≤82			≥18		OP7.			

ED_001691B_00009240

ORGANIC PEROXIDE TABLE—Continued

Technical name	ID number	Concentration (mass %)	Diluent (mass %)			Water (mass %)	Packing method	Temperature (°C)		Notes
			A	B	I			Control	Emergency	
(1)	(2)	(3)	(4a)	(4b)	(4c)	(5)	(6)	(7a)	(7b)	(8)
2,5-Dimethyl-2,5-di-(benzoylperoxy)hexane.	UN3104	≤82				≥18	OP5.			
2,5-Dimethyl-2,5-di-(tert-butylperoxy)hexane.	UN3103	>90–100					OP5.			
2,5-Dimethyl-2,5-di-(tert-butylperoxy)hexane.	UN3105	>52—90	≥10				OP7.			
2,5-Dimethyl-2,5-di-(tert-butylperoxy)hexane.	UN3108	≤77			≥23		OP8.			
2,5-Dimethyl-2,5-di-(tert-butylperoxy)hexane.	UN3109	≤52	≥48				OP8.			
2,5-Dimethyl-2,5-di-(tert-butylperoxy)hexane [as a paste].	UN3108	≤47					OP8.			
2,5-Dimethyl-2,5-di-(tert-butylperoxy)hexyne-3.	UN3101	>86–100					OP5.			
2,5-Dimethyl-2,5-di-(tert-butylperoxy)hexyne-3.	UN3103	>52–86	≥14				OP5.			
2,5-Dimethyl-2,5-di-(tert-butylperoxy)hexyne-3.	UN3106	≤52			≥48		OP7.			
2,5-Dimethyl-2,5-di-(2-ethylhexanoylperoxy)hexane.	UN3113	≤100					OP5	+ 20	+ 25.	
2,5-Dimethyl-2,5-dihydroperoxyhexane.	UN3104	≤82				≥18	OP6.			
2,5-Dimethyl-2,5-di-(3,5,5-trimethylhexanoylperoxy)hexane.	UN3105	≤77	≥23				OP7.			
1,1-Dimethyl-3-hydroxybutylperoxyneoheptanoate.	UN3117	≤52	≥48				OP8	0	+ 10.	
Dimyristyl peroxydicarbonate.	UN3116	≤100					OP7	+ 20	+ 25.	
Dimyristyl peroxydicarbonate [as a stable dispersion in water].	UN3119	≤42					OP8	+ 20	+ 25.	
Di-(2-neodecanoylperoxyisopropyl)benzene.	UN3115	≤52	≥48				OP7	−10	0.	
Di-(2-neodecanoylperoxyisopropyl) benzene, as stable dispersion in water.	3119	≤42					OP8	−15	−5.	
Di-n-nonanoyl peroxide	UN3116	≤100					OP7	0	+ 10.	
Di-n-octanoyl peroxide	UN3114	≤100					OP5	+ 10	+ 15.	
Di-(2-phenoxyethyl)peroxydicarbonate.	UN3102	>85–100					OP5.			
Di-(2-phenoxyethyl)peroxydicarbonate.	UN3106	≤85				≥15	OP7.			
Dipropionyl peroxide	UN3117	≤27		≥73			OP8	+ 15	+ 20.	
Di-n-propyl peroxydicarbonate.	UN3113	≤100					OP3	−25	−15.	
Di-n-propyl peroxydicarbonate.	UN3113	≤77		≥23			OP5	−20	−10.	
Disuccinic acid peroxide	UN3102	>72–100					OP4			18
Disuccinic acid peroxide	UN3116	≤72				≥28	OP7	+ 10	+ 15.	
Di-(3,5,5-trimethylhexanoyl) peroxide.	UN3115	>52–82	≥18				OP7	0	+ 10.	

ED_001691B_00009240

ORGANIC PEROXIDE TABLE—Continued

Technical name	ID number	Concentration (mass %)	Diluent (mass %)			Water (mass %)	Packing method	Temperature (°C)		Notes
			A	B	I			Control	Emergency	
(1)	(2)	(3)	(4a)	(4b)	(4c)	(5)	(6)	(7a)	(7b)	(8)
Di-(3,5,5-trimethylhexanoyl)peroxide [as a stable dispersion in water].	UN3119	≤52					OP8	+ 10	+ 15.	
Di-(3,5,5-trimethylhexanoyl)peroxide.	UN3119	≤38	≥62				OP8	+ 20	+ 25.	
Ethyl 3,3-di-(tert-amylperoxy)butyrate.	UN3105	≤67	≥33				OP7.			
Ethyl 3,3-di-(tert-butylperoxy)butyrate.	UN3103	>77–100					OP5.			
Ethyl 3,3-di-(tert-butylperoxy)butyrate.	UN3105	≤77	≥23				OP7.			
Ethyl 3,3-di-(tert-butylperoxy)butyrate.	UN3106	≤52			≥48		OP7.			
1-(2-ethylhexanoylperoxy)-1,3-Dimethylbutyl peroxypivalate.	UN3115	≤52	≥45	≥10			OP7	−20	−10.	
tert-Hexyl peroxyneodecanoate.	UN3115	≤71	≥29				OP7	0	+ 10.	
tert-Hexyl peroxypivalate	UN3115	≤72		≥28			OP7	+ 10	+ 15.	
3-Hydroxy-1,1-dimethylbutyl peroxyneodecanoate.	3115	≤77	≥23				OP7	−5	+ 5.	
3-Hydroxy-1,1-dimethylbutyl peroxyneodecanoate [as a stable dispersion in water].	3119	≤52					OP8	−5	+ 5.	
3-Hydroxy-1,1-dimethylbutyl peroxyneodecanoate.	3117	≤52	≥48				OP8	−5	+ 5.	
Isopropyl sec-butyl peroxydicarbonat + Di-sec-butyl peroxydicarbonate + Di-isopropyl peroxydicarbonate.	UN3111	≤52 + ≤28 + ≤22					OP5	−20	−10.	
Isopropyl sec-butyl peroxydicarbonate + Di-sec-butyl peroxydicarbonate + Di-isopropyl peroxydicarbonate.	UN3115	≤32 + ≤15 −18 + ≤12 −15	≥38				OP7	−20	−10.	
Isopropylcumyl hydroperoxide.	UN3109	≤72	≥28				OP8			13
p-Menthyl hydroperoxide	UN3105	>72–100					OP7			13
p-Menthyl hydroperoxide	UN3109	≤72	≥28				OP8.			
Methylcyclohexanone peroxide(s).	UN3115	≤67		≥33			OP7	+ 35	+ 40.	
Methyl ethyl ketone peroxide(s).	UN3101	≤52	≥48				OP5			5, 13
Methyl ethyl ketone peroxide(s).	UN3105	≤45	≥55				OP7			5
Methyl ethyl ketone peroxide(s).	UN3107	≤40	≥60				OP8			7
Methyl isobutyl ketone peroxide(s).	UN3105	≤62	≥19				OP7			5, 23
Methyl isopropyl ketone peroxide(s).	3109	(See remark 31).	≥70				OP8			31
Organic peroxide, liquid, sample.	UN3103						OP2			12

ED_001691B_00009240

ORGANIC PEROXIDE TABLE—Continued

Technical name	ID number	Concentration (mass %)	Diluent (mass %)			Water (mass %)	Packing method	Temperature (°C)		Notes
			A	B	I			Control	Emergency	
(1)	(2)	(3)	(4a)	(4b)	(4c)	(5)	(6)	(7a)	(7b)	(8)
Organic peroxide, liquid, sample, temperature controlled.	UN3113	.....	.....	.....	.....	.....	OP2	.....	.....	12
Organic peroxide, solid, sample.	UN3104	.....	.....	.....	.....	.....	OP2	.....	.....	12
Organic peroxide, solid, sample, temperature controlled.	UN3114	.....	.....	.....	.....	.....	OP2	.....	.....	12
3,3,5,7,7-Pentamethyl-1,2,4-Trioxepane.	3107	≤100	.....	.....	.....	.....	OP8.			
Peroxyacetic acid, type D, stabilized.	UN3105	≤43	.....	.....	.....	.....	OP7	.....	.....	13, 20
Peroxyacetic acid, type E, stabilized.	UN3107	≤43	.....	.....	.....	.....	OP8	.....	.....	13, 20
Peroxyacetic acid, type F, stabilized.	UN3109	≤43	.....	.....	.....	.....	OP8	.....	.....	13, 20, 28
Peroxyacetic acid or peracetic acid [with not more than 7% hydrogen peroxide].	UN3107	≤36	.....	.....	.....	≥15	OP8	.....	.....	13, 20, 28
Peroxyacetic acid or peracetic acid [with not more than 20% hydrogen peroxide].	Exempt	≤6	.....	.....	.....	≥60	Exempt	.....	.....	28
Peroxyacetic acid or peracetic acid [with not more than 26% hydrogen peroxide].	UN3109	≤17	.....	.....	.....	.....	OP8	.....	.....	13, 20, 28
Peroxylauric acid	UN3118	≤100	.....	.....	.....	.....	OP8	+ 35	+ 40.	
Pinanyl hydroperoxide	UN3105	>56–100	.....	.....	.....	.....	OP7	.....	.....	13
Pinanyl hydroperoxide	UN3109	≤56	≥44	.....	.....	.....	OP8.			
Polyether poly-tert-butylperoxycarbonate.	UN3107	≤52	.....	≥48	.....	.....	OP8.			
Tetrahydronaphthyl hydroperoxide.	UN3106	≤100	.....	.....	.....	.....	OP7.			
1,1,3,3-Tetramethylbutyl hydroperoxide.	UN3105	≤100	.....	.....	.....	.....	OP7.			
1,1,3,3-Tetramethylbutyl peroxy-2-ethylhexanoate.	UN3115	≤100	.....	.....	.....	.....	OP7	+ 15	+ 20.	
1,1,3,3-Tetramethylbutyl peroxyneodecanoate.	UN3115	≤72	.....	≥28	.....	.....	OP7	-5	+ 5.	
1,1,3,3-Tetramethylbutyl peroxyneodecanoate [as a stable dispersion in water].	UN3119	≤52	.....	.....	.....	.....	OP8	−5	+ 5.	
1,1,3,3-tetramethylbutyl peroxypivalate.	UN3115	≤77	≥23	.....	.....	.....	OP7	0	+ 10.	
3, 6, 9-Triethyl-3, 6, 9-trimethyl-1, 4, 7-triperoxonane.	UN3110	≤17	≥18	.....	≥65	.....	OP8.			
3,6,9-Triethyl-3,6,9-trimethyl-1,4,7-triperoxonane.	UN3105	≤42	≥58	.....	.....	.....	OP7	.....	.....	26
Di-(3, 5, 5-trimethylhexanoyl) peroxide.	UN3119	>38–52	≥48	.....	.....	.....	OP8	+ 10	+ 15.	

NOTES

1. For domestic shipments, OP8 is authorized.

2. Available oxygen must be <4.7%.

3. For concentrations <80% OP5 is allowed. For concentrations of at least 80% but <85%, OP4 is allowed. For concentrations of at least 85%, maximum package size is OP2.

ED_001691B_00009240

4. The diluent may be replaced by di-tert-butyl peroxide.
5. Available oxygen must be ≤9% with or without water.
6. For domestic shipments, OP5 is authorized.
7. Available oxygen must be ≤8.2% with or without water.
8. Only non-metallic packagings are authorized.
9. For domestic shipments this material maybe transported under the provisions of paragraph (h)(3)(xii) of this section.
10. [Reserved]
11. [Reserved]
12. Samples may only be offered for transportation under the provisions of paragraph (b)(2) of this section.
13. "Corrosive" subsidiary risk label is required.
14. [Reserved]
15. No "Corrosive" subsidiary risk label is required for concentrations below 80%.
16. With <6% di-tert-butyl peroxide.
17. With ≤8% 1-isopropylhydroperoxy-4-isopropylhydroxybenzene.
18. Addition of water to this organic peroxide will decrease its thermal stability.
19. [Reserved]
20. Mixtures with hydrogen peroxide, water and acid(s).
21. With diluent type A, with or without water.
22. With ≥36% diluent type A by mass, and in addition ethylbenzene.
23. With ≥19% diluent type A by mass, and in addition methyl isobutyl ketone.
24. Diluent type B with boiling point >100 C.
25. No "Corrosive" subsidiary risk label is required for concentrations below 56%.
26. Available oxygen must be ≤7.6%.
27. Formulations derived from distillation of peroxyacetic acid originating from peroxyacetic acid in a concentration of not more than 41% with water, total active oxygen less than or equal to 9.5% (peroxyacetic acid plus hydrogen peroxide).
28. For the purposes of this section, the names "Peroxyacetic acid" and "Peracetic acid" are synonymous.
29. Not subject to the requirements of this subchapter for Division 5.2.
30. Diluent type B with boiling point >130 °C (266 °F).
31. Available oxygen ≤6.7%.

(d) *Packing Method Table.* Packagings for organic peroxides and self-reactive substances are listed in the Maximum Quantity per Packing Method Table. The packing methods are designated OP1 to OP8. The quantities specified for each packing method represent the maximum that is authorized.

(1) The following types of packagings are authorized:

(i) Drums: 1A1, 1A2, 1B1, 1B2, 1D, 1G, 1H1, 1H2;

(ii) Jerricans: 3A1, 3A2, 3B1, 3B2, 3H1, 3H2;

(iii) Boxes: 4C1, 4C2, 4D, 4F, 4G, 4H1, 4H2, 4A, 4B; or

(iv) Composite packagings with a plastic inner receptacle: 6HA1, 6HA2, 6HB1, 6HB2, 6HC, 6HD1, 6HD2, 6HG1, 6HG2, 6HH1, 6HH2.

(2) Metal packaging (including inner packagings of combination packagings and outer packagings of combination or composite packagings) are used only for packing methods OP7 and OP8.

(3) In combination packagings, glass receptacles are used only as inner packagings with a maximum content of 0.5 kg for solids or 0.5 L for liquids.

(4) The maximum quantity per packaging or package for Packing Methods OP1–OP8 must be as follows:

MAXIMUM QUANTITY PER PACKAGING/PACKAGE

[For Packing Methods OP1 to OP8]

Maximum quantity	Packing Method							
	OP1	OP2	OP3	OP4 [1]	OP5	OP6	OP7	OP8
Solids and combination packagings (liquid and solid) (kg)	0.5	0.5/10	5	5	25	50	50	[2] 400
Liquids (L)	0.5		5		30	60	60	[3] 225

[1] If two values are given, the first applies to the maximum net mass per inner packaging and the second to the maximum net mass of the complete package.
[2] 60 kg for jerricans/200 kg for boxes and, for solids, 400 kg in combination packagings with outer packagings comprising boxes (4C1, 4C2, 4D, 4F, 4G, 4H1, and 4H2) and with inner packagings of plastics or fiber with a maximum net mass of 25 kg.
[3] 60 L for jerricans.

(e) *Organic Peroxide IBC Table.* The following Organic Peroxide IBC Table specifies, by technical name, those organic peroxides that are authorized for transportation in certain IBCs and not subject to the approval provisions of

ED_001691B_00009240

§ 173.128 of this part. Additional requirements for authorized IBCs are found in paragraph (f) of this section.

ORGANIC PEROXIDE IBC TABLE

UN No.	Organic peroxide	Type of IBC	Maximum quantity (litres)	Control temperature	Emergency temperature
3109	ORGANIC PEROXIDE, TYPE F, LIQUID.				
	tert-Butyl hydroperoxide, not more than 72% with water.	31A	1250		
	tert-Butyl peroxyacetate, not more than 32% in diluent type A.	31A	1250		
		31HA1	1000		
	tert-Butyl peroxybenzoate, not more than 32% in diluent type A.	31A	1250		
	tert-Butyl peroxy-3,5,5-trimethylhexanoate, not more than 37% in diluent type A.	31A	1250		
		31HA1	1000		
	Cumyl hydroperoxide, not more than 90% in diluent type A.	31HA1	1250		
	Dibenzoyl peroxide, not more than 42% as a stable dispersion.	31H1	1000		
	Di-tert-butyl peroxide, not more than 52% in diluent type B.	31A	1250		
		31HA1	1000		
	1,1-Di-(tert-Butylperoxy) cyclohexane, not more than 37% in diluent type A.	31A	1250		
	1,1-Di-(tert-butylperoxy) cyclohexane, not more than 42% in diluent type A.	31H1	1000		
	Dicumyl peroxide, less than or equal to 100%.	31A	1250		
		31HA1	1000		
	Dilauroyl peroxide, not more than 42%, stable dispersion, in water.	31HA1	1000		
	Isopropyl cumyl hydroperoxide, not more than 72% in diluent type A.	31HA1	1250		
	p-Menthyl hydroperoxide, not more than 72% in diluent type A.	31HA1	1250		
	Peroxyacetic acid, stabilized, not more than 17%.	31A	1500		
		31H1	1500		
		31H2	1500		
		31HA1	1500		
	Peroxyacetic acid, with not more than 26% hydrogen peroxide.	31A	1500		
		31HA1	1500		
	Peroxyacetic acid, type F, stabilized.	31A	1500		
		31HA1	1500		
3110	ORGANIC PEROXIDE TYPE F, SOLID.				
	Dicumyl peroxide, less than or equal to 100%.	31A	2000		
		31H1			
		31HA1			
3119	ORGANIC PEROXIDE, TYPE F, LIQUID, TEMPERATURE CONTROLLED.				
	tert-Amyl peroxypivalate, not more than 32% in diluent type A.	31A	1250	+ 10 °C	+ 15 °C

ED_001691B_00009240

ORGANIC PEROXIDE IBC TABLE—Continued

UN No.	Organic peroxide	Type of IBC	Maximum quantity (litres)	Control temperature	Emergency temperature
	tert-Butyl peroxy-2-ethylhexanoate, not more than 32% in diluent type B.	31HA1	1000	+ 30 °C	+ 35 °C
		31A	1250	+ 30 °C	+ 35 °C
	tert-Butyl peroxyneodecanoate, not more than 32% in diluent type A.	31A	1250	0 °C	+ 10 °C
	tert-Butyl peroxyneodecanoate, not more than 52%, stable dispersion, in water.	31A	1250	−5 °C	+ 5 °C
	tert-Butyl peroxypivalate, not more than 27% in diluent type B.	31HA1	1000	+ 10 °C	+ 15 °C
		31A	1250	+ 10 °C	+ 15 °C
	Di-(4-tert-butylcyclohexyl) peroxydicarbonate, not more than 42%, stable dispersion, in water.	31HA1	1000	+ 30 °C	+ 35 °C
	Dicetyl peroxydicarbonate, not more than 42%, stable dispersion, in water.	31HA1	1000	+ 30 °C	+ 35 °C
	Dicyclohexylperoxydicarbonate, not more than 42% as a stable dispersion, in water.	31A	1250	+ 10 °C	+ 15 °C
	Di-(2-ethylhexyl) peroxydicarbonate, not more than 62%, stable dispersion, in water.	31A	1250	−20 °C	−10 °C
	Diisobutyryl peroxide, not more than 28% as a stable dispersion in water.	31HA1	1000	−20 °C	−10 °C
		31A	1250	−20 °C	−10 °C
	Diisobutyryl peroxide, not more than 42% as a stable dispersion in water.	31HA1	1000	−25 °C	−15 °C
		31A	1250	−25 °C	−15 °C
	Dimyristyl peroxydicarbonate, not more than 42%, stable dispersion, in water.	31HA1	1000	+ 15 °C	+ 20 °C
	Di-(2-neodecanoylperoxyisopropyl) benzene, not more than 42%, stable dispersion, in water.	31A	1250	−15 °C	−5 °C
	Di-(3,5,5-trimethylhexanoyl) peroxide, not more than 52% in diluent type A.	31HA1	1000	+ 10 °C	+ 15 °C
		31A	1250	+ 10 °C	+ 15 °C
	Di-(3,5,5-trimethylhexanoyl) peroxide, not more than 52%, stable dispersion, in water.	31A	1250	+ 10 °C	+ 15 °C
	3-Hydroxy-1,1-dimethylbutyl peroxy-neodecanoate, not more than 52%, stable dispersion, in water.	31A	1250	−15 °C	−5 °C
	1,1,3,3-Tetramethylbutyl peroxyneodecanoate, not more than 52%, stable dispersion, in water.	31A	1250	−5 °C	+ 5 °C
		31HA1	1000	−5 °C	+ 5 °C

(f) *IBCs.* IBCs are authorized subject to the conditions and limitations of this section if the IBC type is authorized according to paragraph (e) of this section, as applicable, and the IBC conforms to the requirements in subpart O of part 178 of this subchapter at the Packing Group II performance level. Type F organic peroxides or self-reactive substances are not authorized for

ED_001691B_00009240

transportation in IBCs other than those specified, unless approved by the Associate Administrator.

(1) IBCs shall be provided with a device to allow venting during transportation. The inlet to the pressure relief device shall be sited in the vapor space of the IBC under maximum filling conditions during transportation.

(2) To prevent explosive rupture of metal IBCs or composite IBCs with a complete metal casing, the emergency-relief devices shall be designed to vent all the decomposition products and vapors evolved during self-accelerating decomposition or during a period of not less than one hour of complete fire-engulfment as calculated by the formula in paragraph (h)(3)(v) of this section. The control and emergency temperatures specified in the Organic Peroxide IBC Table are based on a non-insulated IBC.

(g) *Organic Peroxide Portable Tank Table.* The following Organic Peroxide Portable Tank Table provides certain portable tank requirements and identifies, by technical name, those organic peroxides that are authorized for transportation in the bulk packagings listed in paragraph (h). Organic peroxides listed in this table, provided they meet the specific packaging requirements found in paragraph (h), are not subject to the approval provisions of § 173.128 of this part.

ED_001691B_00009240

ORGANIC PEROXIDE PORTABLE TANK TABLE

UN No.	Hazardous material	Minimum test pressure (bar)	Minimum shell thickness (mm-reference steel) See. . .	Bottom opening requirements See. . .	Pressure-relief requirements See. . .	Filling limits	Control temperature	Emergency temperature
3109	ORGANIC PEROXIDE, TYPE F, LIQUID.							
	tert-Butyl hydroperoxide, not more than 72% with water. *Provided that steps have been taken to achieve the safety equivalence of 65% tert-Butyl hydroperoxide and 35% water.	4	§ 178.274(d)(2)	§ 178.275(d)(3)	§ 178.275(g)(1)	Not more than 90% at 59 °F (15 °C)		
	Cumyl hydro-peroxide, not more than 90% in diluent type A.	4	§ 178.274(d)(2)	§ 178.275(d)(3)	§ 178.275(g)(1)	Not more than 90% at 59 °F (15 °C)		
	Di-tert-butyl peroxide, not more 32% in diluent type A.	4	§ 178.274(d)(2)	§ 178.275(d)(3)	§ 178.275(g)(1)	Not more than 90% at 59 °F (15 °C)		
	Dicumyl peroxide, less than or equal to 100% in diluent type B.	4	§ 178.274(d)(2)	§ 178.275(d)(3)	§ 178.275(g)(1)	Not more than 90% at 59 °F (15 °C)		
	Isopropyl cumyl hydro-peroxide, not more than 72% in diluent type A.	4	§ 178.274(d)(2)	§ 178.275(d)(3)	§ 178.275(g)(1)	Not more than 90% at 59 °F (15 °C)		
	p-Menthyl hydro-peroxide, not more than 72% in diluent type A.	4	§ 178.274(d)(2)	§ 178.275(d)(3)	§ 178.275(g)(1)	Not more than 90% at 59 °F (15 °C)		
	Pinanyl hydro-peroxide, not more than 56% in diluent type A.	4	§ 178.274(d)(2)	§ 178.275(d)(3)	§ 178.275(g)(1)	Not more than 90% at 59 °F (15 °C)		
3110	ORGANIC PEROXIDE, TYPE F, SOLID.							
	Dicumyl peroxide less than or equal to 100% with inert solids. *Maximum quantity per portable tank 2,000 kg.	4	§ 178.274(d)(2)	§ 178.275(d)(3)	§ 178.275(g)(1)	Not more than 90% at 59 °F (15 °C)		
3119	ORGANIC PEROXIDE, TYPE F, LIQUID, TEMPERATURE CONTROLLED.							
	tert-Amyl peroxyneodecanoate, not more than 47% in diluent type A.	4	§ 178.274 (d)(2)	§ 178.275 (d)(3)	§ 178.275 (g)(1)	Not more than 90% at 59 °F (15 °C)	−10 °C	−5 °C.
	tert-Butyl peroxyacetate, not more than 32% in diluent type B.	4	§ 178.274(d)(2)	§ 178.275(d)(3)	§ 178.275(g)(1)	Not more than 90% at 59 °F (15 °C)	+ 30 °C	+ 35 °C
	tert-Butyl peroxy-2-ethylhexanoate, not more than 32% in diluent B.	4	§ 178.274(d)(2)	§ 178.275(d)(3)	§ 178.275(g)(1)	Not more than 90% at 59 °F (15 °C)	+ 15 °C	+ 20 °C

ED_001691B_00009240

tert-Butylperoxypivalate, not more than 27% in diluent type B.	4	§ 178.274(d)(2)	§ 178.275(d)(3)	§ 178.275(g)(1)	Not more than 90% at 59 °F (15 °C)	+ 5 °C	+ 10 °C
tert-Butyl peroxy-3,5,5-trimethylhexanoate, not more than 32% in diluent type B.	4	§ 178.274(d)(2)	§ 178.275(d)(3)	§ 178.275(g)(1)	Not more than 90% at 59 °F (15 °C)	+ 35 °C	+ 40 °C
Di-(3,5,5-trimethyl-hexanoyl) peroxide, not more than 38% in diluent type A or type B.	4	§ 178.274 (d)(2)	§ 178.275 (d)(3)	§ 178.275 (g)(1)	Not more than 90% at 59 °F (15 °C)	0 °C	+ 5 °C.
Peroxyacetic acid, distilled, stabilized, not more than 41%. [1].	4	§ 178.274(d)(2)	§ 178.275(d)(3)	§ 178.275(g)(1)	Not more than 90% at 59 °F (15 °C)	+ 30 °C	+ 35 °C

Note: 1. ''Corrosive'' subsidiary risk placard is required.

ED_001691B_00009240

(h) *Bulk packagings other than IBCs.* The following bulk packagings are authorized, subject to the conditions and limitations of this section, if the organic peroxide is listed in the Organic Peroxide Portable Tank Table and bulk packagings are authorized, or if the organic peroxide is specifically authorized for transport in a bulk packaging by this paragraph (h), and the bulk packaging conforms to the requirements of this subchapter:

(1) *Rail cars.* Class DOT 103, 104, 105, 109, 111, 112, 114, 115, or 120 fusion-weld tank car tanks are authorized. DOT 103W, 111A60F1 and 111A60W1 tank car tanks must have bottom outlets effectively sealed from inside. Gauging devices are required on DOT 103W tank car tanks. Riveted tank car tanks are not authorized.

(2) *Cargo tanks.* Specification MC 307, MC 310, MC 311, MC 312, DOT 407, and DOT 412 cargo tank motor vehicles with a tank design pressure of at least 172 kPa (25 psig) are authorized.

(3) *Portable tanks.* The following requirements apply to portable tanks intended for the transport of organic peroxides or self-reactive substances. DOT 51, 57, IM 101 portable tanks, and UN portable tanks that conform to the requirements of paragraph (g) of this section, are authorized. Type F organic peroxide or self-reactive substance formulations other than those indicated in the Organic Peroxide Portable Tank Table may be transported in portable tanks if approved by the Associate Administrator. The following conditions also apply:

(i) The portable tank must be designed for a test pressure of at least 0.4 MPa (4 bar).

(ii) The portable tank must be fitted with temperature-sensing devices.

(iii) The portable tank must be fitted with pressure relief devices and emergency-relief devices. Vacuum-relief devices may also be used. Pressure relief devices must operate at pressures determined according to both the properties of the hazardous material and the construction characteristics of the portable tank. Fusible elements are not allowed in the shell.

(iv) The pressure relief devices must consist of reclosing devices fitted to prevent significant build-up within the portable tank of the decomposition products and vapors released at a temperature of 50 °C (122 °F). The capacity and start-to-discharge pressure of the relief devices must be in accordance with the applicable requirements of this subchapter specified for the portable tank. The pressure relief devices must not allow liquid to escape in the event the portable tank is overturned in a loaded condition.

(v)(A) The emergency-relief devices may be of the reclosing or frangible types, or a combination of the two, designed to vent all the decomposition products and vapors evolved during a period of not less than one hour of complete fire engulfment as calculated by the following formula:

$$q = 70961\ F\ A^{0.82}$$

Where:

q = heat absorption (W)
A = wetted area (m^2)
F = insulation factor (–)

(B) Insulation factor (F) in the formula in paragraph (h)(3)(v)(A) of this section equals 1 for non-insulated vessels and for insulated vessels F is calculated using the following formula:

$$F = \frac{U\left(923 - T_{PO}\right)}{47032}$$

Where:

U = K/L = heat transfer coefficient of the insulation ($W \cdot m^{-2} \cdot K^{-1}$); where K = heat conductivity of insulation layer ($W \cdot m^{-1} \cdot K^{-1}$), and L = thickness of insulation layer (m).

T_{PO} = temperature of material at relieving conditions (K).

(vi) The start-to-discharge pressure of emergency-relief devices must be higher than that specified for the pressure relief devices in paragraph (h)(3)(iv) of this section. The emergency-relief devices must be sized and designed in such a way that the maximum pressure in the shell never exceeds the test pressure of the portable tank.

NOTE TO PARAGRAPH (h)(3)(vi): An example of a method to determine the size of emergency-relief devices is given in Appendix 5 of the UN Manual of Tests and Criteria (IBR, see § 171.7 of this subchapter). A second example of a test method for venting sizing is given in the American Institute of Chemical

ED_001691B_00009240

Engineers Process Safety Progress Journal, June 2002 issue (Vol. 21, No. 2) (Informational materials not requiring incorporation by reference, see §171.7(b)).

(vii) For insulated portable tanks, the capacity and setting of emergency-relief devices must be determined assuming a loss of insulation from 1% of the surface area.

(viii) Vacuum-relief devices and reclosing devices on portable tanks used for flammable hazardous materials must be provided with flame arresters. Any reduction of the relief capacity caused by the flame arrester must be taken into account and the appropriate relief capacity must be provided.

(ix) Service equipment such as devices and external piping must be designed and constructed so that no hazardous material remains in them after filling the portable tank.

(x) Portable tanks may be either insulated or protected by a sun-shield. If the SADT of the hazardous material in the portable tank is 55 °C (131 °F) or less, the portable tank must be completely insulated. The outer surface must be finished in white or bright metal.

(xi) The degree of filling must not exceed 90% at 15 °C (59 °F).

(xii) DOT 57 metal portable tanks are authorized only for those materials or mixtures of two or more materials that are provided with a reference to Note 9 in Column 8 of the Organic Peroxide Table, found in paragraph (c) of this section. DOT 57 portable tanks must conform to the venting requirements of paragraph (f) of this section. These portable tanks are not subject to any other requirements of paragraph (h) of this section.

(4) For tertiary butyl hydroperoxide (TBHP), each tank car, cargo tank or portable tank must contain 7.6 cm (3.0 inches) low density polyethylene (PE) saddles having a melt index of at least 0.2 grams per 10 minutes (for example see, ASTM D1238, condition E) as part of the lading, with a ratio of PE to TBHP over a range of 0.008 to 0.012 by mass. Alternatively, plastic or metal containers equipped with fusible plugs having a melting point between 69 °C (156 °F) and 71 °C (160 °F) and filled with a sufficient quantity of water to dilute the TBHP to 65% or less by mass may be used. The PE saddles must be visually inspected after each trip and, at a minimum, once every 12 months, and replaced when discoloration, fracture, severe deformation, or other indication of change is noted.

[69 FR 76159, Dec. 20, 2004, as amended at 70 FR 34398, June 14, 2005; 72 FR 55693, Oct. 1, 2007; 74 FR 2260, Jan. 14, 2009; 78 FR 1089, Jan. 7, 2013; 78 FR 65482, Oct. 31, 2013; 80 FR 1160, Jan. 8, 2015]

§ 173.226 Materials poisonous by inhalation, Division 6.1, Packing Group I, Hazard Zone A.

Division 6.1, Packing Group I, Zone A poisonous by inhalation (see §173.133) must be packed in non-bulk packagings in accordance with the following paragraphs:

(a) In seamless specification or UN cylinders conforming to the requirements of §173.40.

(b) In 1A1, 1B1, 1H1, 1N1, or 6HA1 drums further packed in a 1A2 or 1H2 drum. Both inner and outer drums must conform to the performance test requirements of subpart M of part 178 of this subchapter at the Packing Group I performance level. The outer drums may be tested either as a package intended to contain inner packagings (combination package) or as a single packaging intended to contain solids or liquids at a mass corresponding to the mass of the assembled packaging system. All outer drums, even those tested to contain inner packaging or as single packagings for solids, must withstand a hydrostatic test pressure of 100 kPa (15 psig). The outer drum must have a minimum thickness of 1.35 mm (0.053 inch) for a 1A2 outer drum or 6.3 mm (0.248 inch) for a 1H2 outer drum. In addition, the inner drum must—

(1) Be capable of satisfactorily withstanding the hydrostatic pressure test in §178.605 of this subchapter at a test pressure of 300 kPa (45 psig);

(2) Satisfactorily withstand the leakproofness test in §178.604 of this subchapter using an internal air pressure of at least twice the vapor pressure at 55 °C (131 °F) of the material to be packaged;

(3) Have screw-type closures that are—

ED_001691B_00009240

(i) Closed and tightened to a torque prescribed by the closure manufacturer, using a properly calibrated device that is capable of measuring torque;

(ii) Physically held in place by any means capable of preventing back-off or loosening of the closure by impact or vibration during transportation; and

(iii) Provided with a cap seal that is properly applied in accordance with the cap seal manufacturer's recommendations and is capable of withstanding an internal pressure of at least 100 kPa (15 psig).

(4) Have a minimum thickness as follows:

(i) For a 1A1 or 1N1 drum, 1.3 mm (0.051 inch);

(ii) For a 1B1 drum, 3.9 mm (0.154 inch);

(iii) For a 1H1 drum, 3.16 mm (0.124 inch); and

(iv) For a 6HA1 drum, the plastic inner container shall be 1.58 mm (0.0622 inch) and the outer steel drum shall be 0.96 mm (0.0378 inch).

(5) Be isolated from the outer drum by a shock-mitigating, non-reactive material, which completely surrounds the inner packaging on all sides.

(c) In combination packagings, consisting of an inner packaging system and an outer packaging, as follows:

(1) Outer packagings:

Steel drum: 1A2
Aluminum drum: 1B2
Metal drum, other than steel or aluminum: 1N2
Plywood drum: 1D
Fiber drum: 1G
Plastic drum: 1H2
Steel box: 4A
Aluminum box: 4B
Natural wood box: 4C1 or 4C2
Plywood box: 4D
Reconstituted wood box: 4F
Fiberboard box: 4G
Expanded plastic box: 4H1
Solid plastic box: 4H2
Metal box other than steel or aluminum: 4N

(2) Inner packaging system. The inner packaging system consists of two packagings:

(i) an impact-resistant receptacle of glass, earthenware, plastic or metal securely cushioned with a non-reactive, absorbent material, and

(A) Capacity of each inner receptacle may not exceed 4 L (1 gallon).

(B) An inner receptacle that has a closure must have a closure which is physically held in place by any means capable of preventing back-off or loosening of the closure by impact or vibration during transportation.

(ii) Packed within a leak-tight packaging of metal or plastic.

(iii) This combination packaging in turn is packed within the outer packaging.

(3) Additional requirements:

(i) The total amount of liquid contained in the outer packaging must not exceed 16 L (4 gallons).

(ii) The inner packaging system must conform to the performance test requirements of subpart M of part 178 of this subchapter, at the Packaging Group I performance level when subjected to the following tests:

(A) § 178.603—Drop Test

(B) § 178.604—Leakproofness Test

(C) § 178.605—Hydrostatic Pressure Test

(iii) The inner packaging system must meet the above tests without the benefit of the outer packaging.

(iv) The leakproofness and hydrostatic pressure test may be conducted on either the inner receptacle or the outer packaging of the inner packaging system.

(v) The outer package must conform to the performance test requirements of subpart M of part 178 of this subchapter, at the Packaging Group I performance level as applicable for the type of package being used.

(d) If approved by the Associate Administrator, 1A1, 1B1, 1H1, 1N1, 6HA1 or 6HH1 drums described in paragraph (b) of this section may be used without being further packed in a 1A2 or 1H2 drum if the shipper loads the material, palletizes the drums, blocks and braces the drums within the transport vehicle and seals the transport vehicle used. Drums may not be stacked (double decked) within the transport vehicle. Shipments must be from one origin to one destination only without any intermediate pickup or delivery.

(e) Prior to reuse, all authorized inner drums must be leakproofness tested and marked in accordance with § 173.28 using a minimum test pressure

ED_001691B_00009240

as indicated in paragraph (b)(2) of this section.

[69 FR 76172, Dec. 20, 2004, as amended at 71 FR 33881, June 12, 2006; 74 FR 2263, Jan. 14, 2009; 78 FR 1090, Jan. 7, 2013]

§ 173.227 Materials poisonous by inhalation, Division 6.1, Packing Group I, Hazard Zone B.

(a) In packagings as authorized in § 173.226 and seamless and welded specification cylinders or UN seamless cylinders conforming to the requirements of § 173.40.

(b) 1A1, 1B1, 1H1, 1N1, 6HA1, or 6HH1 drums further packed in a 1A2 or 1H2 drum. Both the inner and outer drums must conform to the performance test requirements of subpart M of part 178 of this subchapter at the Packing Group I performance level. Both the inner and outer drums must conform to the performance test requirements of subpart M of part 178 of this subchapter at the Packing Group I performance level. The outer drums may be tested either as a package intended to contain inner packagings (combination package) or as a single packaging intended to contain solids or liquids at a mass corresponding to the mass of the assembled packaging system. The outer drum must have a minimum thickness of 1.35 mm (0.053 inches) for a 1A2 outer drum or 6.30 mm (0.248 inches) for a 1H2 outer drum. Outer 1A2 and 1H2 drums must withstand a hydrostatic test pressure of 100 kPa (15 psig). Capacity of the inner drum may not exceed 220 liters. In addition, the inner drum must conform to all of the following requirements:

(1) Satisfactorily withstand the leakproofness test in § 178.604 of this subchapter using an internal air pressure of at least two times the vapor pressure at 55 °C (131 °F) of the material to be packaged;

(2) Have screw closures that are—

(i) Closed and tightened to a torque prescribed by the closure manufacturer, using a properly calibrated device that is capable of measuring torque;

(ii) Physically held in place by any means capable of preventing back-off or loosening of the closure by impact or vibration during transportation; and

(iii) Provided with a cap seal that is properly applied in accordance with the cap seal manufacturer's recommendations and is capable of withstanding an internal pressure of at least 100 kPa (15 psig).

(3) Have a minimum thickness as follows:

(i) For a 1A1 drum, 0.69 mm (0.027 inch);

(ii) For a 1B1 drum, 2.79 mm (0.110 inch);

(iii) For a 1H1 drum, 1.14 mm (0.045 inch); or

(iv) For a 6HA1 drum, the plastic inner container shall be 1.58 mm (0.0625 inch), the outer steel drum shall be 0.70 mm (0.027 inch).

(4) Be isolated from the outer drum by a shock-mitigating, non-reactive material which completely surrounds the inner packaging on all sides.

(5) Prior to reuse, all authorized inner drums must be leakproofness tested and marked in accordance with § 173.28 using a minimum test pressure as indicated in paragraph (b)(1) of this section.

(c) 1A1, 1B1, 1H1, 1N1, 6HA1 or 6HH1 drums described in paragraph (b) of this section may be used without being further packed in a 1A2 or 1H2 drum if the shipper loads the material, blocks and braces the drums within the transport vehicle and seals the transport vehicle used. Drums may not be stacked (double decked) within the transport vehicle. Shipments must be from one origin to one destination only without any intermediate pickup or delivery.

[70 FR 34398, June 14, 2005, as amended at 71 FR 33881, June 12, 2006; 73 FR 57006, Oct. 1, 2008]

§ 173.228 Bromine pentafluoride or bromine trifluoride.

(a) Bromine pentafluoride and bromine trifluoride are authorized in packagings as follows:

(1) Specification 3A150, 3AA150, 3B240, 3BN150, 4B240, 4BA240, 4BW240, and 3E1800 cylinders.

(2) UN cylinders as specified in part 178 of this subchapter, except acetylene cylinders and non-refillable cylinders, with a minimum test pressure of 10 bar and a minimum outage of 8 percent by volume. The use of UN tubes and MEGCs is not authorized.

ED_001691B_00009240

(3) The use of a pressure relief device is not authorized.

(b) A material in Hazard Zone A must be transported in a seamless specification cylinder conforming to the requirements of § 173.40. However, a welded cylinder filled before October 1, 2002, in accordance with the requirements of this subchapter in effect at the time of filling, may be transported for reprocessing or disposal of the cylinder's contents until December 31, 2003. No cylinder may be equipped with a pressure relief device.

[67 FR 51643, Aug. 8, 2002, as amended at 67 FR 61289, Sept. 30, 2002; 68 FR 24660, May 8, 2003, as amended at 71 FR 33881, June 12, 2006]

§ 173.229 Chloric acid solution or chlorine dioxide hydrate, frozen.

When the § 172.101 table specifies that a hazardous material be packaged in accordance with this section, only 4G fiberboard boxes, with inner packagings of polyethylene or other suitable material, are authorized. Fiberboard boxes must be reinforced and insulated and sufficient dry ice must be used to maintain the hydrate or acid in a frozen state during transportation. Each packaging must conform to the general packaging requirements of subpart B of part 173, and to the requirements of part 178 of this subchapter at the Packing Group I performance level. Transportation is authorized only by private or contract carrier by motor vehicle.

§ 173.230 Fuel cell cartridges containing hazardous material.

(a) *Requirements for Fuel Cell Cartridges.* Fuel cell cartridges, including when contained in or packed with equipment, must be designed and constructed to prevent fuel leakage under normal conditions of transportation. Fuel cell cartridge design types using liquids as fuels must pass an internal pressure test at a gauge pressure of 100 kPa (15 psig) without leakage. Except for fuel cell cartridges containing hydrogen in metal hydride which must be in conformance with paragraph (d) of this section, each fuel cell cartridge design type including when contained in or packed with equipment, must pass a 1.2 meter (3.9 feet) drop test onto an unyielding surface in the orientation most likely to result in the failure of the containment system with no loss of contents. Fuel cell cartridges installed in or integral to a fuel cell system are regarded as contained in equipment. Fuel cell cartridges containing a Division 2.1, Division 4.3 or Class 8 material must meet the following additional requirements.

(b) A fuel cell cartridge designed to contain a Division 4.3 or a Class 8 material may contain an activator provided it is fitted with two independent means of preventing unintended mixing with the fuel during transport.

(c) Each fuel cell cartridge designed to contain a liquefied flammable gas must:

(1) Be capable of withstanding, without leakage or bursting, a pressure of at least two times the equilibrium pressure of the contents at 55 °C (131 °F);

(2) Contain no more than 200 mL of liquefied flammable gas with a vapor pressure not exceeding 1,000 kPa (150 psig) at 55 °C (131 °F); and

(3) Pass the hot water bath test prescribed in accordance with § 173.306(a)(3)(v).

(d) Each fuel cell cartridge designed to contain hydrogen in a metal hydride must conform to the following:

(1) Each fuel cell cartridge must have a water capacity less than or equal to 120 mL (4 fluid ounces).

(2) Each fuel cell cartridge must be a design type that has been subjected, without leakage or bursting, a pressure of at least two times the design pressure of the cartridge at 55 °C (131 °F) or 200 kPa (30 psig) more than the design pressure of the cartridge at 55 °C (131 °F), whichever is greater. The pressure at which the test is conducted is referred to as the "minimum shell burst pressure." The pressure within the fuel cell cartridge must not exceed 5 MPa (725 psig) at 55 °C (131 °F).

(3) Each fuel cell cartridge must be filled in accordance with the procedure provided by the manufacturer. The manufacturer must provide the following information with each fuel cell cartridge:

(i) Inspection procedures to be carried out before initial filling and before refilling of the fuel cell cartridge;

ED_001691B_00009240

(ii) Safety precautions and potential hazards to be aware of;

(iii) A method of determining when the rated capacity has been achieved;

(iv) Minimum and maximum pressure range;

(v) Minimum and maximum temperature range; and

(vi) Any other requirements to be met for initial filling and refilling including the type of equipment to be used.

(4) Each fuel cell cartridge must be permanently marked with the following information:

(i) The rated charging pressure in megapascals (MPa);

(ii) The manufacturer's serial number of the fuel cell cartridges or unique identification number; and

(iii) The expiration date based on the maximum service life (yyyy/mm).

(5) *Design type tests:* Each fuel cell cartridge design type must be subjected to and pass the following tests (this includes cartridges integral to a fuel cell):

(i) *Drop test.* A 1.8 m (5.9 feet) drop test onto an unyielding surface must be performed. There must be no leakage. Leakage must be determined using a soap bubble solution or other equivalent means on all possible leak locations, when the fuel cell cartridge is charged to its rated charging pressure. The fuel cell cartridge must then be hydrostatically pressurized to destruction. The burst pressure must be greater than 85% of the minimum shell burst pressure. The drop must be performed in the following four different orientations:

(A) Vertically, on the end containing the shut-off valve assembly;

(B) Vertically, on the end opposite to the shut-off valve assembly;

(C) Horizontally, onto a steel apex with a diameter of 3.8 cm (9.7 in), with the steel apex in the upward position; and

(D) At a 45° angle on the end containing the shut-off valve assembly.

(ii) *Fire test.* A fuel cell cartridge filled to rated capacity (with hydrogen) must be subjected to a fire engulfment test. The cartridge design (including design types with an integral vent feature) is deemed to pass the fire test if:

(A) The internal pressure vents to zero gauge pressure without the rupture of the cartridge; or

(B) The cartridge withstands the fire for a minimum of 20 minutes without rupture.

(iii) *Hydrogen cycling test.* A fuel cell cartridge must be subjected to a hydrogen cycling test to ensure that the design stress limits are not exceeded during use. The fuel cell cartridge must be cycled from not more than 5% rated hydrogen capacity to not less than 95% rated hydrogen capacity and back to not more than 5% rated hydrogen capacity. The rated charging pressure must be used for charging and temperatures must be within the operating temperature range. The cycling must be continued for at least 100 cycles. Following the cycling test the fuel cell cartridge must be charged and the water volume displaced by the cartridge must be measured. The cartridge design is deemed to pass the test if the water volume displaced by the cycled cartridge does not exceed the water volume displaced by an uncycled cartridge charged to 95% rated capacity and pressurized to 75% of its minimum shell burst pressure.

(6) *Production leak test.* Each fuel cell cartridge must be tested for leaks at 15 °C ±5 °C (59 °F ±9 °F) while pressurized to its rated charging pressure. There must be no leakage. Leakage must be determined using a soap bubble solution or other equivalent means on all possible leak locations.

(e) The following packagings are authorized provided the general packaging requirements subpart B of part 173 of this subchapter are met:

(1) For fuel cell cartridges, rigid packagings conforming to the requirements of part 178 of this subchapter at the packing group II performance level; and

(2) Strong outer packagings for fuel cell cartridges contained in equipment or packed with equipment. Large equipment containing fuel cell cartridges may be transported unpackaged if the equipment provides an equivalent level of protection.

(i) Fuel cell cartridges packed with equipment must be packed with cushioning material or divider(s) or inner

ED_001691B_00009240

packagings so that the fuel cell cartridges are protected against damage that may be caused by the shifting or placement of the equipment and cartridges within the packaging.

(ii) For fuel cell cartridges contained in equipment, the entire fuel cell system must be protected against short circuits and unintentional activation. The equipment must be securely cushioned in the outer packaging.

(f) For transportation by aircraft, the following additional provisions apply:

(1) The package must comply with the applicable provisions of §173.27 of this subchapter;

(2) For fuel cell cartridges contained in equipment, fuel cell systems must not charge batteries during transport;

(3) For transportation aboard passenger aircraft, for fuel cell cartridges contained in equipment, each fuel cell system and fuel cell cartridge must conform to IEC 62282–6–100 and IEC 62282–6–100 Amend. 1 (IBR, see §171.7 of this subchapter) or a standard approved by the Associate Administrator;

(4) When packed with equipment, fuel cell cartridges must be packed in an intermediate packaging along with the equipment they are capable of powering, and the intermediate packagings packed in a strong outer packaging. The maximum number of fuel cell cartridges in the intermediate packaging may not be more than the number required to power the equipment, plus two spares;

(5) Large robust articles containing fuel cells may be transported unpackaged when approved by the Associate Administrator; and

(6) The mass of a fuel cell cartridge containing a Division 4.3 or Class 8 materials must be not more than 1 kg (2.2 lbs).

(7) Fuel cell cartridges intended for transportation in carry-on baggage on board passenger aircraft must comply with paragraphs (a), (b), (c), (d) in this section and the applicable provisions prescribed in §175.10 of this subchapter.

(g) *Limited quantities.* Limited quantities of hazardous materials contained in fuel cell cartridges are excepted from the labeling requirements, unless the cartridges are offered for transportation or transported by aircraft, and from the placarding and specification packaging requirements of this subchapter when packaged according to this section. Each package must conform to the packaging requirements of subpart B of this part and may not exceed 30 kg (66 pounds) gross weight. Except as authorized in paragraph (h) of this section, a package containing a limited quantity of fuel cell cartridges must be marked as specified in §172.315 of this subchapter and, for transportation by highway or rail, is not subject to the shipping paper requirements of subpart C of part 172 of this subchapter, unless the material meets the definition of a hazardous substance, hazardous waste, or marine pollutant, and are eligible for the exceptions provided in §173.156 of part. For transportation by highway, rail and vessel, the following combination packagings are authorized:

(1) For flammable liquids, in fuel cell cartridges containing not more than 1.0 L (0.3 gallon) per cartridge, packed in strong outer packaging.

(2) For water-reactive substances (Division 4.3 Dangerous when wet material), in fuel cell cartridges containing not more than 0.5 L (16.9 fluid ounces) for liquids or not over 0.5 kg (1.1 pound) for solids per cartridge, packed in strong outer packaging.

(3) For corrosive materials, in fuel cell cartridges containing not more than 1.0 L (0.3 gallon) for liquids or not more than 1.0 kg (2.2 pounds) for solids per cartridge, packed in strong outer packaging.

(4) For liquefied (compressed) flammable gas, in fuel cell cartridges not over 120 mL (4 fluid ounces) net capacity per cartridge, packed in strong outer packaging.

(5) For hydrogen in metal hydride, in fuel cell cartridges not over 120 mL (4 fluid ounces) net capacity per cartridge, packed in strong outer packaging.

(6) For transportation by aircraft, the following combination packagings are authorized:

(i) For flammable liquids, in fuel cell cartridges containing not more than 0.5 L (16.9 fluid ounces) per cartridge, packed in strong outer packaging. Additionally, each package may contain no more than 2.5 kg (net mass) of fuel cell cartridges.

ED_001691B_00009240

(ii) For water-reactive substances (Division 4.3 Dangerous when wet material), in fuel cell cartridges containing not more than 200 g (0.4 pounds) of solid fuel per cartridge, packed in strong outer packaging. Additionally, each package may contain no more than 2.5 kg (net mass) of fuel cell cartridges.

(iii) For corrosive materials, in fuel cell cartridges containing not more than 200 mL (6.7 fluid ounces) for liquids or not more than 200 g (0.4 pounds) for solids per cartridge packed in strong outer packaging. Additionally, each package may contain no more than 2.5 kg (net mass) of fuel cell cartridges.

(iv) For liquefied (compressed) flammable gas, in fuel cell cartridges not over 120 mL (4 fluid ounces) net capacity per cartridge, packed in strong outer packaging. Additionally, each package may contain no more than 0.5 kg (net mass) of fuel cell cartridges.

(v) For hydrogen in metal hydride, in fuel cell cartridges not over 120 mL (4 fluid ounces) net capacity per cartridge, packed in strong outer packaging. Additionally, each package may contain no more than 0.5 kg (net mass) of fuel cell cartridges.

(h) *Consumer commodities.* Until December 31, 2020, for other than transportation by aircraft, a limited quantity that conforms to the provisions of paragraph (g) of this section and is also a "consumer commodity" as defined in §171.8 of this subchapter, may be renamed "Consumer commodity" and reclassed as ORM–D. In addition to the exceptions provided by paragraph (g) of this section, shipments of ORM–D materials are not subject to the shipping paper requirements of subpart C of part 172 of this subchapter, unless the materials meet the definition of a hazardous substance, hazardous waste, marine pollutant, or are offered for transportation by aircraft, and are eligible for the exceptions provided in §173.156 of this part.

[74 FR 2263, Jan. 14, 2009, as amended at 75 FR 73, Jan. 4, 2010; 76 FR 3379, Jan. 19, 2011; 78 FR 1090, 1115, Jan. 7, 2013; 78 FR 65485, Oct. 31, 2013]

§ 173.231 Ammonium nitrate emulsion, suspension or gel.

(a) Packagings for non-bulk shipments of Ammonium nitrate emulsions, suspensions and gels must conform to the general packaging requirements of subpart B of part 173, to the requirements of part 178 of this subchapter at the Packing Group I or II performance level, and the requirements of the special provisions of column 7 of the §172.101 table.

(1) The following combination packagings are authorized:

Outer packagings:
Drums: 1B2, 1G, 1N2, 1H2 or 1D
Boxes: 4B, 4C1, 4C2, 4D, 4G or 4H2
Jerricans: 3B2 of 3H2

Inner packagings:
Glass, plastic or metal inner receptacles

(2) For combination packagings, the capacity of each inner packaging must not exceed 5 liters (1.3 gallons) and the maximum authorized net weight of each outer packaging must not exceed 125 kg (275 pounds).

(3) The following single packagings are authorized:

Drums: 1B1, 1B2, 1H1 or 1H2 with a maximum capacity of 250 liters (66 gallons).

Jerricans: 3B1, 3B2, 3H1 or 3H2 with a maximum capacity of 60 liters (15.9 gallons).

Plastic receptacle in aluminum, fiber, plastic or plywood drum: 6HB1, 6HG1, 6HH1 or 6HD1with the outer drum having a maximum capacity of 250 liters (66 gallons).

Plastic receptacle in aluminum wood, plywood, fiberboard, or solid plastic box: 6HB2, 6HC, 6HD2, 6HG2, or 6HH2 with the outer box having a maximum capacity of 60 liters (15.9 gallons).

Glass receptacle in aluminum, fiber, or plywood drum: 6PB1, 6PF1 or 6PD1 with the outer drum having a maximum capacity of 60 liters (15.9 gallons).

Glass receptacle in expanded plastic or solid plastic packaging: 6PH1 or 6PH2 with the outer packaging having a maximum capacity of 60 liters (15.9 gallons).

Glass receptacle in aluminum, wood, or fiberboard box, or wickerwork hamper: 6PB2, 6PC, 6PG2 or 6PD2 with the outer box or hamper having a maximum capacity of 60 liters (15.9 gallons).

(b) [Reserved]

[80 FR 1160, Jan. 8, 2015]

ED_001691B_00009240

Subpart F—Bulk Packaging for Hazardous Materials Other Than Class 1 and Class 7

§ 173.240 Bulk packaging for certain low hazard solid materials.

When § 172.101 of this subchapter specifies that a hazardous material be packaged under this section, only the following bulk packagings are authorized, subject to the requirements of subparts A and B of part 173 of this subchapter and the special provisions specified in column 7 of the § 172.101 table.

(a) *Rail cars:* Class DOT 103, 104, 105, 109, 111, 112, 114, 115, or 120 tank car tanks; Class 106 or 110 multi-unit tank car tanks; and metal non-DOT specification, sift-proof tank car tanks and sift-proof closed cars.

(b) *Motor vehicles:* Specification MC 300, MC 301, MC 302, MC 303, MC 304, MC 305, MC 306, MC 307, MC 310, MC 311, MC 312, MC 330, MC 331, DOT 406, DOT 407, and DOT 412 cargo tank motor vehicles; non-DOT specification, sift-proof cargo tank motor vehicles; and sift-proof closed vehicles.

(c) *Portable tanks and closed bulk bins.* DOT 51, 56, 57 and 60 portable tanks; IMO type 1, 2 and 5, and IM 101 and IM 102 portable tanks; UN portable tanks; marine portable tanks conforming to 46 CFR part 64; and sift-proof non-DOT Specification portable tanks and closed bulk bins are authorized.

(d) *IBCs.* IBCs are authorized subject to the conditions and limitations of this section provided the IBC type is authorized according to the IBC packaging code specified for the specific hazardous material in Column (7) of the § 172.101 Table of this subchapter and the IBC conforms to the requirements in subpart O of part 178 of this subchapter at the Packing Group performance level as specified in Column (5) of the § 172.101 Table of this subchapter for the material being transported.

(1) IBCs may not be used for the following hazardous materials:

(i) Packing Group I liquids; and

(ii) Packing Group I solids that may become liquid during transportation.

(2) The following IBCs may not be used for Packing Group II and III solids that may become liquid during transportation:

(i) Wooden: 11C, 11D and 11F;

(ii) Fiberboard: 11G;

(iii) Flexible: 13H1, 13H2, 13H3, 13H4, 13H5, 13L1, 13L2, 13L3, 13L4, 13M1 and 13M2; and

(iv) Composite: 11HZ2 and 21HZ2.

(e) *Large Packagings.* Large Packagings are authorized subject to the conditions and limitations of this section provided the Large Packaging type is authorized according to the IBC packaging code specified for the specific hazardous material in Column (7) of the § 172.101 Table of this subchapter and the Large Packaging conforms to the requirements in subpart Q of part 178 of this subchapter at the Packing Group performance level as specified in Column (5) of the § 172.101 Table for the material being transported.

(1) Except as specifically authorized in this subchapter, Large Packagings may not be used for Packing Group I or II hazardous materials.

(2) Large Packagings with paper or fiberboard inner receptacles may not be used for solids that may become liquid in transportation.

(f) *Flexible Bulk Containers.* Flexible Bulk Containers are authorized subject to the conditions and limitations of this section provided the use of a Flexible Bulk Container is authorized by the inclusion of bulk packaging code B120 in Column (7) of the § 172.101 Hazardous Materials Table of this subchapter and the Flexible Bulk Container conforms to the requirements in subpart S of part 178 of this subchapter. Flexible Bulk Containers may not be used for Packing Group I or II hazardous materials.

[Amdt. 173–224, 55 FR 52663, Dec. 21, 1990, as amended at 56 FR 66274, Dec. 20, 1991; Amdt. 173–238, 59 FR 38067, July 26, 1994; Amdt. 173–252, 61 FR 28676, June 5, 1996; 66 FR 33435, June 21, 2001; 78 FR 1091, Jan. 7, 2013]

§ 173.241 Bulk packagings for certain low hazard liquid and solid materials.

When § 172.101 of this subchapter specifies that a hazardous material be packaged under this section, only the following bulk packagings are authorized, subject to the requirements of subparts A and B of part 173 of this subchapter and the special provisions specified in column 7 of the § 172.101 table.

ED_001691B_00009240

(a) *Rail cars:* Class DOT 103, 104, 105, 109, 111, 112, 114, 115, 117, or 120 tank car tanks; Class 106 or 110 multi-unit tank car tanks; and AAR Class 203W, 206W, and 211W tank car tanks. Additional operational requirements apply to high-hazard flammable trains (see § 171.8 of this subchapter) as prescribed in § 174.310 of this subchapter. Except as otherwise provided in this section, DOT Specification 111 tank cars and DOT Specification 111 tank cars built to the CPC–1232 industry standard are no longer authorized to transport Class 3 (flammable liquids) in Packing Group III, for use in high-hazard flammable train service, unless retrofitted to the DOT Specification 117R retrofit standards or the DOT Specification 117P performance standards provided in part 179, subpart D of this subchapter.

(1) DOT Specification 111 tank cars and DOT Specification 111 tank cars built to the CPC–1232 industry standard are no longer authorized for use in high-hazard flammable train service unless retrofitted prior to the dates in the following table:

Packing group	DOT 111 not authorized on or after	DOT 111 built to the CPC–1232 not authorized on or after
III	May 1, 2025	May 1, 2025.

(2) Conforming retrofitted tank cars are to be marked "DOT–117R."

(3) Conforming performance standard tank cars are to be marked "DOT–117P."

(b) *Cargo tanks:* DOT specification MC 300, MC 301, MC 302, MC 303, MC 304, MC 305, MC 306, MC 307, MC 310, MC 311, MC 312, MC 330, MC 331, DOT 406, DOT 407, and DOT 412 cargo tank motor vehicles; and non-DOT specification cargo tank motor vehicles suitable for transport of liquids.

(c) *Portable tanks.* DOT Specification 51, 56, 57 and 60 portable tanks; IMO type 1, 2 and 5, and IM 101 and IM 102 portable tanks; UN portable tanks; marine portable tanks conforming to 46 CFR part 64; and non-DOT Specification portable tanks suitable for transport of liquids are authorized. For transportation by vessel, also see § 176.340 of this subchapter. For transportation of combustible liquids by vessel, additional requirements are specified in § 176.340 of this subchapter.

(d) *IBCs.* IBCs are authorized subject to the conditions and limitations of this section provided the IBC type is authorized according to the IBC packaging code specified for the specific hazardous material in Column (7) of the § 172.101 Table of this subchapter and the IBC conforms to the requirements in subpart O of part 178 of this subchapter at the Packing Group performance level as specified in Column (5) of the § 172.101 Table for the material being transported.

(1) IBCs may not be used for the following hazardous materials:

(i) Packing Group I liquids; and

(ii) Packing Group I solids that may become liquid during transportation.

(2) The following IBCs may not be used for Packing Group II and III solids that may become liquid during transportation:

(i) Wooden: 11C, 11D and 11F;

(ii) Fiberboard: 11G;

(iii) Flexible: 13H1, 13H2, 13H3, 13H4, 13H5, 13L1, 13L2, 13L3, 13L4, 13M1 and 13M2; and

(iv) Composite: 11HZ2 and 21HZ2.

(e) *Large Packagings.* Large Packagings are authorized subject to the conditions and limitations of this section provided the Large Packaging type is authorized according to the IBC packaging code specified for the specific hazardous material in Column (7) of the § 172.101 Table of this subchapter and the Large Packaging conforms to the requirements in subpart Q of part 178 of this subchapter at the Packing Group performance level as specified in Column (5) of the § 172.101 Table for the material being transported.

(1) Except as specifically authorized in this subchapter, Large Packagings may not be used for Packing Group I or II hazardous materials.

(2) Large Packagings with paper or fiberboard inner receptacles may not

ED_001691B_00009240

be used for solids that may become liquid in transportation.

[Amdt. 173–224, 55 FR 52663, Dec. 21, 1990, as amended at 56 FR 66275, Dec. 20, 1991; Amdt. 173–238, 59 FR 38067, July 26, 1994; Amdt. 173–252, 61 FR 28676, June 5, 1996; 66 FR 33435, June 21, 2001; 68 FR 57632, Oct. 6, 2003; 70 FR 34075, June 13, 2005; 75 FR 5394, Feb. 2, 2010; 80 FR 26747, May 8, 2015]

§ 173.242 Bulk packagings for certain medium hazard liquids and solids, including solids with dual hazards.

When § 172.101 of this subchapter specifies that a hazardous material be packaged under this section, only the following bulk packagings are authorized, subject to the requirements of subparts A and B of part 173 of this subchapter and the special provisions specified in column 7 of the § 172.101 table.

(a) *Rail cars:* Class DOT 103, 104, 105, 109, 111, 111, 112, 114, 115, 117, or 120 tank car tanks; Class 106 or 110 multi-unit tank car tanks and AAR Class 206W tank car tanks. Additional operational requirements apply to high-hazard flammable trains (see § 171.8 of this subchapter) as prescribed in § 174.310 of this subchapter. Except as otherwise provided in this section, DOT Specification 111 tank cars and DOT Specification 111 tank cars built to the CPC–1232 industry standard are no longer authorized to transport Class 3 (flammable liquids) in Packing Group II and III, for use in high-hazard flammable train service, unless retrofitted to the DOT Specification 117R retrofit standards, or the DOT Specification 117P performance standards provided in part 179, subpart D of this subchapter.

(1) DOT Specification 111 tank cars and DOT Specification 111 tank cars built to the CPC–1232 industry standard are no longer authorized for use in high-hazard flammable train service unless retrofitted prior to the dates in the following table:

Packing group	DOT 111 not authorized on or after	DOT 111 built to the CPC–1232 industry standard not authorized on or after
II	May 1, 2023 (jacketed and non-jacketed)	July, 1 2023 (non-jacketed). May 1, 2025 (jacketed).
III	May 1, 2025	May 1, 2025.

(2) Conforming retrofitted tank cars are to be marked "DOT–117R."

(3) Conforming performance standard tank cars are to be marked "DOT–117P."

(b) *Cargo tanks:* Specification MC 300, MC 301, MC 302, MC 303, MC 304, MC 305, MC 306, MC 307, MC 310, MC 311, MC 312, MC 330, MC 331, DOT 406, DOT 407, and DOT 412 cargo tank motor vehicles; and non-DOT specification cargo tank motor vehicles when in compliance with § 173.5a(c). Cargo tanks used to transport Class 3, Packing Group I or II, or Packing Group III with a flash point of less than 38 °C (100 °F); Class 6, Packing Group I or II; and Class 8, Packing Group I or II materials must conform to the following special requirements:

(1) Pressure relief system: Except as provided by § 173.33(d), each cargo tank must be equipped with a pressure relief system meeting the requirements of § 178.346–3 or § 178.347–4 of this subchapter. However, pressure relief devices on MC 310, MC 311 and MC 312 cargo tanks must meet the requirements for a Specification MC 307 cargo tank (except for Class 8, Packing Group I and II). Pressure relief devices on MC 330 and MC 331 cargo tanks must meet the requirement in § 178.337–9 of this subchapter.

(2) Bottom outlets: DOT 406, DOT 407 and DOT 412 must be equipped with stop-valves meeting the requirements of § 178.345–11 of this subchapter; MC 304, MC 307, MC 310, MC 311, and MC 312 cargo tanks must be equipped with stop-valves capable of being remotely closed within 30 seconds of actuation by manual or mechanic means and (except for Class 8, Packing Group I and II) by a closure activated at a temperature not over 121 °C (250 °F); MC 330 and MC 331 cargo tanks must be equipped with internal self-closing stop-valves meeting the requirements in § 178.337–11 of this subchapter.

(c) *Portable tanks.* DOT Specification 51, 56, 57 and 60 portable tanks; Specification IM 101, IM 102, and UN portable tanks when a T Code is specified

ED_001691B_00009240

in Column (7) of the § 172.101 Hazardous Materials Table for a specific hazardous material; and marine portable tanks conforming to 46 CFR part 64 are authorized. DOT Specification 57 portable tanks used for the transport by vessel of Class 3, Packaging Group II materials must conform to the following:

(1) *Minimum design pressure.* Each tank must have a minimum design pressure of 62 kPa (9 psig);

(2) *Pressure relief devices.* Each tank must be equipped with at least one pressure relief device, such as a spring-loaded valve or fusible plug, conforming to the following:

(i) Each pressure relief device must communicate with the vapor space of the tank when the tank is in a normal transportation attitude. Shutoff valves may not be installed between the tank opening and any pressure relief device. Pressure relief devices must be mounted, shielded, or drained to prevent the accumulation of any material that could impair the operation or discharge capability of the device;

(ii) Frangible devices are not authorized;

(iii) No pressure relief device may open at less than 34.4 kPa (5 psig);

(iv) If a fusible device is used for relieving pressure, the device must have a minimum area of 1.25 square inches. The device must function at a temperature between 104 °C. and 149 °C. (220 °F. and 300 °F.) and at a pressure less than the design test pressure of the tank, unless this latter function is accomplished by a separate device; and

(v) No relief device may be used which would release flammable vapors under normal conditions of transportation (temperature up to and including 54 °C. (130 °F.).); and

(3) *Venting capacity.* The minimum venting capacity for pressure activated vents must be 6,000 cubic feet of free air per hour (measured at 101.3 kPa (14.7 psi) and 15.6 °C. (60 °F.)) at not more than 34.4 kPa (5 psi). The total emergency venting capacity (cu. ft./hr.) of each portable tank must be at least that determined from the following table:

Total surface area square feet [1] [2]	Cubic feet free air per hour
20	15,800
30	23,700
40	31,600
50	39,500
60	47,400
70	55,300
80	63,300
90	71,200
100	79,100
120	94,900
140	110,700
160	126,500

[1] Interpolate for intermediate sizes.
[2] Surface area excludes area of legs.

(4) Unless provided by § 173.32(h)(3), an IM 101, 102 or UN portable tank with a bottom outlet and used to transport a liquid hazardous material that is a Class 3, PG I or II, or PG III with a flash point of less than 38 °C (100 °F); Division 5.1 PG I or II; or Division 6.1, PG I or II, must have internal valves conforming to § 178.275(d)(3) of this subchapter.

(d) *IBCs.* IBCs are authorized subject to the conditions and limitations of this section provided the IBC type is authorized according to the IBC packaging code specified for the specific hazardous material in Column (7) of the § 172.101 Table of this subchapter and the IBC conforms to the requirements in subpart O of part 178 of this subchapter at the Packing Group performance level as specified in Column (5) of the § 172.101 Table of this subchapter for the material being transported.

(1) IBCs may not be used for the following hazardous materials:

(i) Packing Group I liquids; and

(ii) Packing Group I solids that may become liquid during transportation.

(2) The following IBCs may not be used for Packing Group II and III solids that may become liquid during transportation:

(i) Wooden: 11C, 11D and 11F;

(ii) Fiberboard: 11G;

(iii) Flexible: 13H1, 13H2, 13H3, 13H4, 13H5, 13L1, 13L2, 13L3, 13L4, 13M1 and 13M2; and

(iv) Composite: 11HZ2 and 21HZ2.

(e) *Large Packagings.* Large Packagings are authorized subject to the conditions and limitations of this section provided the Large Packaging type is authorized according to the IBC packaging code specified for the specific hazardous material in Column (7)

ED_001691B_00009240

of the § 172.101 Table of this subchapter and the Large Packaging conforms to the requirements in subpart Q of part 178 of this subchapter at the Packing Group performance level as specified in Column (5) of the § 172.101 Table for the material being transported.

(1) Except as specifically authorized in this subchapter, Large Packagings may not be used for Packing Group I or II hazardous materials.

(2) Large Packagings with paper or fiberboard inner receptacles may not be used for solids that may become liquid in transportation.

[Amdt. 173–224, 55 FR 52663, Dec. 21, 1990, as amended at 56 FR 66275, Dec. 20, 1991; Amdt. 173–238, 59 FR 38067, July 26, 1994; Amdt. 173–243, 60 FR 40038, Aug. 4, 1995; Amdt. 173–246, 60 FR 49110, Sept. 21, 1995; Amdt. 173–252, 61 FR 28676, June 5, 1996; 62 FR 51560, Oct. 1, 1997; 65 FR 50461, Aug. 18, 2000; 66 FR 33435, June 21, 2001; 67 FR 15743, Apr. 3, 2002; 68 FR 32413, May 30, 2003; 75 FR 5395, Feb. 2, 2010; 76 FR 5492, Feb. 1, 2011; 80 FR 26747, May 8, 2015]

§ 173.243 Bulk packaging for certain high hazard liquids and dual hazard materials which pose a moderate hazard.

When § 172.101 of this subchapter specifies that a hazardous material be packaged under this section, only the following bulk packagings are authorized, subject to the requirements of subparts A and B of part 173 of this subchapter and the special provisions specified in column 7 of the § 172.101 table.

(a) *Rail cars:* Class DOT 103, 104, 105, 109, 111, 112, 114, 115, 117, or 120 fusion-welded tank car tanks; and Class 106 or 110 multi-unit tank car tanks. Additional operational requirements apply to high-hazard flammable trains (see § 171.8 of this subchapter) as prescribed in § 174.310 of this subchapter. Except as otherwise provided in this section, DOT Specification 111 tank cars and DOT Specification 111 tank cars built to the CPC–1232 industry standard are no longer authorized to transport Class 3 (flammable liquids) in Packing Group I, for use in high-hazard flammable train service, unless retrofitted to the DOT Specification 117R retrofit standards or the DOT Specification 117P performance standards provided in part 179, subpart D of this subchapter.

(1) DOT Specification 111 tank cars and DOT Specification 111 tank cars built to the CPC–1232 industry standard are no longer authorized for use in high-hazard flammable train service unless retrofitted prior to the dates in the following table:

Packing group	DOT 111 not authorized on or after	DOT 111 built to the CPC–1232 industry standard not authorized on or after
I	January 1, 2017 (non-jacketed report trigger) January 1, 2018 (non-jacketed) March 1, 2018 (jacketed).	April 1, 2020 (non-jacketed). May 1, 2025 (jacketed).

(2) Conforming retrofitted tank cars are to be marked "DOT–117R."

(3) Conforming performance standard tank cars are to be marked "DOT–117P."

(b) *Cargo tanks.* Specification MC 304, MC 307, MC 330, MC 331 cargo tank motor vehicles; and MC 310, MC 311, MC 312, DOT 407, and DOT 412 cargo tank motor vehicles with tank design pressure of at least 172.4 kPa (25 psig). Cargo tanks used to transport Class 3 or Division 6.1 materials, or Class 8, Packing Group I or II materials must conform to the following special requirements:

(1) Pressure relief system: Except as provided by § 173.33(d), each cargo tank must be equipped with a pressure relief system meeting the requirements of § 178.346–3 or 178.347–4 of this subchapter. However, pressure relief devices on MC 310, MC 311 and MC 312 cargo tanks must meet the requirements for a Specification MC 307 cargo tank (except for Class 8, Packing Group I and II). Pressure relief devices on MC 330 and MC 331 cargo tanks must meet the requirement in § 178.337–9 of this subchapter.

(2) Bottom outlets: DOT 407 and DOT 412 cargo tanks must be equipped with stop-valves meeting the requirements of § 178.345–11 of this subchapter; MC 304, MC 307, MC 310, MC 311, and MC 312 cargo tanks must be equipped with

ED_001691B_00009240

stop-valves capable of being remotely closed within 30 seconds of actuation by manual or mechanic means and (except for Class 8, Packing Group I and II) by a closure activated at a temperature not over 121 °C (250 °F); MC 330 and MC 331 cargo tanks must be equipped with internal self-closing stop-valves meeting the requirements in § 178.337–11 of this subchapter.

(c) *Portable tanks.* DOT Specification 51 and 60 portable tanks; UN portable tanks and IM 101 and IM 102 portable tanks when a T code is specified in Column (7) of the § 172.101 Table of this subchapter for a specific hazardous material; and marine portable tanks conforming to 46 CFR part 64 with design pressure of at least 172.4 kPa (25 psig) are authorized. Unless provided by § 173.32(h)(3), an IM 101, 102 or UN portable tank, with a bottom outlet, used to transport a liquid hazardous material that is a Class 3, PG I or II, or PG III with a flash point of less than 38 °C (100 °F); Division 5.1, PG I or II; or Division 6.1, PG I or II, must have internal valves conforming to § 178.275(d)(3) of this subchapter.

(d) *IBCs.* IBCs are authorized subject to the conditions and limitations of this section provided the IBC type is authorized according to the IBC packaging code specified for the specific hazardous material in Column (7) of the § 172.101 Table of this subchapter and the IBC conforms to the requirements in subpart O of part 178 of this subchapter at the Packing Group performance level as specified in Column (5) of the § 172.101 Table of this subchapter for the material being transported.

(1) IBCs may not be used for the following hazardous materials:

(i) Packing Group I liquids; and

(ii) Packing Group I solids that may become liquid during transportation.

(2) The following IBCs may not be used for Packing Group II and III solids that may become liquid during transportation:

(i) Wooden: 11C, 11D and 11F;

(ii) Fiberboard: 11G;

(iii) Flexible: 13H1, 13H2, 13H3, 13H4, 13H5, 13L1, 13L2, 13L3, 13L4, 13M1 and 13M2; and

(iv) Composite: 11HZ2 and 21HZ2.

(e) A dual hazard material may be packaged in accordance with § 173.242 if:

(1) The subsidiary hazard is Class 3 with a flash point greater than 38 °C (100 °F); or

(2) The subsidiary hazard is Division 6.1, Packing Group III; or

(3) The subsidiary hazard is Class 8, Packaging Group, III.

[Amdt. 173–224, 55 FR 52663, Dec. 21, 1990, as amended at 56 FR 66275, Dec. 20, 1991; Amdt. 173–138, 59 FR 49134, Sept. 26, 1994; Amdt. 173–238, 59 FR 38068, July 26, 1994; Amdt. 173–243, 60 FR 40038, Aug. 4, 1995; Amdt. 173–246, 60 FR 49110, Sept. 21, 1995; Amdt. 173–252, 61 FR 28676, June 5, 1996; 62 FR 51560, Oct. 1, 1997; 64 FR 10780, Mar. 5, 1999; 66 FR 33435, June 21, 2001; 67 FR 15743, Apr. 3, 2002; 68 FR 32413, May 30, 2003; 80 FR 26748, May 8, 2015]

§ 173.244 Bulk packaging for certain pyrophoric liquids (Division 4.2), dangerous when wet (Division 4.3) materials, and poisonous liquids with inhalation hazards (Division 6.1).

When § 172.101 of this subchapter specifies that a hazardous material be packaged under this section, only the following bulk packagings are authorized, subject to the requirements of subparts A and B of part 173 of this subchapter and the special provisions specified in column 7 of the § 172.101 table.

(a) *Rail cars:* (1) Class DOT 105, 109, 112, 114, or 120 fusion-welded tank car tanks; and Class 106 or 110 multi-unit tank car tanks. For tank car tanks built prior to March 16, 2009, the following conditions apply:

(i) Division 6.1 Hazard Zone A materials must be transported in tank cars having a test pressure of 34.47 Bar (500 psig) or greater and conform to Classes 105J, 106 or 110.

(ii) Division 6.1 Hazard Zone B materials must be transported in tank cars having a test pressure of 20.68 Bar (300 psig) or greater and conform to Classes 105S, 106, 110, 112J, 114J or 120S.

(iii) Hydrogen fluoride, anhydrous must be transported in tank cars having a test pressure of 20.68 Bar (300 psig) or greater and conform to Classes 105, 112, 114 or 120.

(2) For materials poisonous by inhalation, single unit tank cars tanks built prior to March 16, 2009 and approved by the Tank Car Committee for

ED_001691B_00009240

transportation of the specified material. Except as provided in §173.244(a)(3), tank cars built on or after March 16, 2009 used for the transportation of the PIH materials listed below, must meet the applicable authorized tank car specification listed in the following table:

Proper shipping name	Authorized tank car specification
Acetone cyanohydrin, stabilized (Note 1)	105J500I 112J500I
Acrolein (Note 1)	105J600I
Allyl Alcohol	105J500I 112J500I
Bromine	105J500I
Chloropicrin	105J500I 112J500I
Chlorosulfonic acid	105J500I 112J500I
Dimethyl sulfate	105J500I 112J500I
Ethyl chloroformate	105J500I 112J500I
Hexachlorocyclopentadiene	105J500I 112J500I
Hydrocyanic acid, aqueous solution*or* Hydrogen cyanide, aqueous solution*with not more than 20% hydrogen cyanide (Note 2)*	105J500I 112J500I
Hydrogen cyanide, stabilized (Note 2)	105J600I
Hydrogen fluoride, anhydrous	105J500I 112J500I
Poison inhalation hazard, Zone A materials not specifically identified in this table	105J600I
Poison inhalation hazard, Zone B materials not specifically identified in this table	105J500I 112J500I
Phosphorus trichloride	105J500I 112J500I
Sulfur trioxide, stabilized	105J500I 112J500I
Sulfuric acid, fuming	105J500I 112J500I
Titanium tetrachloride	105J500I 112J500I

Note 1: Each tank car must have a reclosing pressure relief device having a start-to-discharge pressure of 10.34 Bar (150 psig). Restenciling to a lower test pressure is not authorized.

Note 2: Each tank car must have a reclosing pressure relief device having a start-to-discharge pressure of 15.51 Bar (225 psig). Restenciling to a lower test pressure is not authorized.

(3) As an alternative to the authorized tank car specification listed in the table in paragraph (a)(2) of this section, a car of the same authorized tank car specification but of the next lower test pressure, as prescribed in column 5 of the table at §179.101–1 of this subchapter, may be used provided that both of the following conditions are met:

(i) The difference between the alternative and the required minimum plate thicknesses, based on the calculation prescribed in §179.100–6 of this subchapter, must be added to the alternative tank car jacket and head shield. When the jacket and head shield are made from steel with a minimum tensile strength from 70,000 p.s.i. to 80,000 p.s.i., but the required minimum plate thickness calculation is based on steel with a minimum tensile strength of 81,000 p.s.i., the thickness to be added to the jacket and head shield must be increased by a factor of 1.157. Forming allowances for heads are not required to be considered when calculating thickness differences.

(ii) The tank car jacket and head shield are manufactured from carbon steel plate as prescribed in §179.100–7(a) of this subchapter.

(b) *Cargo tanks:* Specifications MC 330 and MC 331 cargo tank motor vehicles and, except for Division 4.2 materials, MC 312 and DOT 412 cargo tank motor vehicles.

(c) *Portable tanks:* DOT 51 portable tanks and UN portable tanks that meet the requirements of this subchapter, when a T code is specified in Column (7) of the §172.101 Table of this subchapter for the specific hazardous material, are authorized. Additionally, a DOT 51 or UN portable tank used for Division 6.1 liquids, Hazard Zone A or B, must be certified and stamped to the ASME Code as specified in §178.273(b)(6) of this subchapter.

[Amdt. 173–224, 55 FR 52663, Dec. 21, 1990, as amended at 56 FR 66275, Dec. 20, 1991; 57 FR 45463, Oct. 1, 1992; Amdt. 173–252, 61 FR 28676, June 5, 1996; 68 FR 45037, July 31, 2003; 72 FR 55693, Oct. 1, 2007; 74 FR 1799, Jan. 13, 2009]

§ 173.245 Bulk packaging for extremely hazardous materials such as poisonous gases (Division 2.3).

When §172.101 of this subchapter specifies that a hazardous material be packaged under this section, only the following bulk packagings are authorized, subject to the requirements of subparts A and B of part 173 of this subchapter and the special provisions specified in column 7 of the §172.101 table.

(a) Tank car tanks and multi-unit tank car tanks, when approved by the Associate Administrator.

ED_001691B_00009240

(b) Cargo tank motor vehicles and portable tanks, when approved by the Associate Administrator.

[Amdt. 173–224, 55 FR 52663, Dec. 21, 1990, as amended at 56 FR 66275, Dec. 20, 1991; 66 FR 45379, Aug. 28, 2001]

§ 173.247 Bulk packaging for certain elevated temperature materials.

When § 172.101 of this subchapter specifies that a hazardous material be packaged under this section, only the following bulk packagings are authorized, subject to the requirements of subparts A and B of part 173 of this subchapter and the special provisions in column 7 of the § 172.101 table. On or after October 1, 1993, authorized packagings must meet all requirements in paragraph (g) of this section, unless otherwise excepted.

(a) *Rail cars:* Class DOT 103, 104, 105, 109, 111, 112, 114, 115, or 120 tank car tanks; Class DOT 106, 110 multi-unit tank car tanks; AAR Class 203W, 206W, 211W tank car tanks; and non-DOT specification tank car tanks equivalent in structural design and accident damage resistance to specification packagings.

(b) *Cargo tanks:* Specification MC 300, MC 301, MC 302, MC 303, MC 304, MC 305, MC 306, MC 307, MC 310, MC 311, MC 312, MC 330, MC 331 cargo tank motor vehicles; DOT 406, DOT 407, DOT 412 cargo tank motor vehicles; and non-DOT specification cargo tank motor vehicles equivalent in structural design and accident damage resistance to specification packagings. A non-DOT specification cargo tank motor vehicle constructed of carbon steel which is in elevated temperature material service is excepted from § 178.345–7(d)(5) of this subchapter.

(c) *Portable tanks.* DOT Specification 51, 56, 57 and 60 portable tanks; IM 101 and IM 102 portable tanks; UN portable tanks; marine portable tanks conforming to 46 CFR part 64; metal IBCs and non-specification portable tanks equivalent in structural design and accident damage resistance to specification packagings are authorized.

(d) *Crucibles:* Nonspecification crucibles designed and constructed such that the stress in the packaging does not exceed one fourth (0.25) of the ultimate strength of the packaging material at any temperature within the design temperature range. Stress is determined under a load equal to the sum of the static or working pressure in combination with the loads developed from accelerations and decelerations incident to normal transportation. For highway transportation, these forces are assumed to be "1.7g" vertical, "0.75g" longitudinal, and "0.4g" transverse, in reference to the axes of the transport vehicle. Each accelerative or decelerative load may be considered separately.

(e) *Kettles:* A kettle, for the purpose of this section, is a bulk packaging (portable tank or cargo tank) having a capacity not greater than 5678 L (1500 gallons) with an integral heating apparatus used for melting various bituminous products such as asphalt. Kettles used for the transport of asphalt or bitumen are subject to the following requirements:

(1) *Low stability kettles.* Kettles with a ratio of track-width to fully loaded center of gravity (CG) height less than 2.5 must meet all requirements of paragraph (g) of this section (track-width is the distance measured between the outer edge of the kettle tires; CG height is measured perpendicular from the road surface).

(2) *High stability kettles.* (i) Kettles with a total capacity of less than 2650 L (700 gallons) and a ratio of track-width to fully loaded CG height of 2.5 or more are excepted from all requirements of paragraph (g)(2) of this section and the rollover protection requirements of paragraph (g)(6) of this section, if closures meet the requirements of paragraph (e)(2)(iii) of this section.

(ii) Kettles with a total capacity of 2650 L (700 gallons) or more and a ratio of track-width to fully loaded CG height of 2.5 or more are excepted from the "substantially leak tight" requirements of paragraph (g)(2) of this section and the rollover protection requirements of paragraph (g)(6) of this section if closures meet the requirements of paragraph (e)(2)(iii) of this section.

(iii) Closures must be securely closed during transportation. Closures also must be designed to prevent opening

ED_001691B_00009240

and the expulsion of lading in a rollover accident.

(f) *Other bulk packagings:* Bulk packagings, other than those specified in paragraphs (a) through (e) of this section, which are used for the transport of elevated temperature materials, must conform to all requirements of paragraph (g) of this section on or after October 1, 1993.

(g) *General requirements.* Bulk packagings authorized or used for transport of elevated temperature materials must conform to the following requirements:

(1) *Pressure and vacuum control equipment.* When pressure or vacuum control equipment is required on a packaging authorized in this section, such equipment must be of a self-reclosing design, must prevent package rupture or collapse due to pressure, must prevent significant release of lading due to packaging overturn or splashing or surging during normal transport conditions, and may be external to the packaging.

(i) Pressure control equipment is not required if pressure in the packaging would increase less than 10 percent as a result of heating the lading from the lowest design operating temperature to a temperature likely to be encountered if the packaging were engulfed in a fire. When pressure control equipment is required, it must prevent rupture of the packaging from heating, including fire engulfment.

(ii) Vacuum control equipment is not required if the packaging is designed to withstand an external pressure of 100 kPa (14.5 psig) or if pressure in the packaging would decrease less than 10 percent as a result of the lading cooling from the highest design operating temperature to the lowest temperature incurred in transport. When vacuum control equipment is required, it must prevent collapse of the packaging from a cooling-induced pressure differential.

(iii) When the regulations require a reclosing pressure relief device, the lading must not render the devices inoperable (i.e. from clogging, freezing, or fouling). If the lading affects the proper operation of the device, the packaging must have:

(A) A safety relief device incorporating a frangible disc or a permanent opening, each having a maximum effective area of 22 cm^2 (3.4 $in.^2$), for transportation by highway;

(B) For transportation of asphalt by highway, a safety relief device incorporating a frangible disc or a permanent opening, each having a maximum effective area of 48 cm^2 (7.4 in^2); or

(C) For transportation by rail, a nonreclosing pressure relief device incorporating a rupture disc conforming to the requirements of § 179.15 of this subchapter.

(iv) Reclosing pressure relief devices, rupture discs or permanent openings must not allow the release of lading during normal transportation conditions (i.e., due to splashing or surging).

(2) *Closures.* All openings, except permanent vent openings authorized in paragraph (g)(1)(iii) of this section, must be securely closed during transportation. Packagings must be substantially leak-tight so as not to allow any more than dripping or trickling of a non-continuous flow when overturned. Closures must be designed and constructed to withstand, without exceeding the yield strength of the packaging, twice the static loading produced by the lading in any packaging orientation and at all operating temperatures.

(3) *Strength.* Each packaging must be designed and constructed to withstand, without exceeding the yield strength of the packaging, twice the static loading produced by the lading in any orientation and at all operating temperatures.

(4) *Compatibility.* The packaging and lading must be compatible over the entire operating temperature range.

(5) *Markings.* In addition to any other markings required by this subchapter, each packaging must be durably marked in a place readily accessible for inspection in characters at least 4.8 mm (3/16 inch) with the manufacturer's name, date of manufacture, design temperature range, and maximum product weight (or "load limit" for tank cars) or volumetric capacity.

(6) *Accident damage protection.* For transportation by highway, external loading and unloading valves and closures must be protected from impact damage resulting from collision or overturn. Spraying equipment and the

ED_001691B_00009240

road oil application portion of a packaging are excepted from this requirement.

(7) *New construction.* Specification packagings that are being manufactured for the transport of elevated temperature materials must be authorized for current construction.

(h) *Exceptions*—(1) *General.* Packagings manufactured for elevated temperature materials service prior to October 1, 1993, which are not in full compliance with the requirements in paragraph (g) of this section, may continue in service if they meet the applicable requirements of subparts A and B of this part and meet the closure requirements in paragraph (g)(2) of this section by March 30, 1995.

(2) *Kettles.* Kettles in service prior to October 1, 1993, which are used to transport asphalt or bitumen, are excepted from specific provisions of this section as follows:

(i) Kettles with a total capacity of less than 2650 L (700 gallons), which are not in full compliance with the requirements of paragraph (g) of this section, may continue in elevated temperature material service if they meet the applicable requirements of subparts A and B of this part and if, after March 30, 1995, closures are secured during transport to resist opening in an overturn.

(ii) Kettles with a total capacity of 2650 L (700 gallons) or more, which are not in full compliance with the requirements of paragraph (g) of this section, may continue in elevated temperature material service if they meet the applicable requirements of subparts A and B of this part and if, after March 30, 1995, closures are secured during transport to resist opening in an overturn and no opening exceeds 46 cm^2 (7.1 in^2).

(3) *Molten metals and molten glass.* This section does not apply to packagings used for transportation of molten metals and molten glass by rail when movement is restricted to operating speeds less than 15 miles per hour. (See §172.203(g)(3) of this subchapter for shipping paper requirements.)

(4) *Solid elevated temperature materials.* A material which meets the definition of a solid elevated temperature material is excepted from all requirements of this subchapter except §172.325 of this subchapter.

[Amdt. 173–227, 58 FR 3349, Jan. 8, 1993, as amended by Amdt. 173–234, 58 FR 51532, Oct. 1, 1993; 173–237, 59 FR 28493, June 2, 1994; 62 FR 51560, Oct. 1, 1997; 63 FR 52849, Oct. 1, 1998; 65 FR 50461, Aug. 18, 2000; 66 FR 33436, June 21, 2001; 66 FR 45382, Aug. 28, 2001; 67 FR 61013, Sept. 27, 2002]

§173.249 Bromine.

When §172.101 of this subchapter specifies that a hazardous material be packaged under this section, only the following bulk packagings are authorized, subject to the requirements of subparts A and B of part 173 of this subchapter and the special provisions specified in column 7 of the §172.101 table.

(a) Class DOT 105A300W or 105A500W tank cars. Class 105A500W tank cars may be equipped with manway cover plates, pressure relief valves, vent valves, and loading/unloading valves that are required on Class 105A–300W tank cars. Tank cars must conform to the requirements in paragraphs (a) through (g) of this section.

(b) Specification MC 310, MC 311, MC 312 or DOT 412 cargo tank motor vehicles conforming with paragraphs (d) through (f) of this section. Except when transported as a residue, the total quantity in one tank may not be less than 88 percent or more than 96 percent of the volume of the tank. Cargo tanks in bromine service built prior to August 31, 1991, may continue in service under the requirements contained in §173.252(a)(4) of this part in effect on September 30, 1991.

(c) UN portable tanks conforming to tank code T22 (see §172.102 of this subchapter) or specification IM 101 portable tanks conforming with paragraphs (d) through (f) of this section. Except when transported as a residue, the total quantity in one tank may not be less than 88% nor more than 92% of the volume of the tank.

(d) The tank must be made from nickel-clad or lead-lined steel plate. Nickel cladding or lead lining must be on the inside of the tank. Nickel cladding must comprise at least 20 percent of the required minimum total thickness. Nickel cladding must conform to

ED_001691B_00009240

ASTM B 162 (IBR, see § 171.7 of this subchapter). Lead lining must be at least 4.763 mm (0.188 inch) thick. All tank equipment and appurtenances in contact with the lading must be lined or made from metal not subject to deterioration by contact with lading.

(e) Maximum filling density is 300 percent of the tank's water capacity. Minimum filling density is 287 percent of the tank's water capacity. Maximum water capacity is 9,253 kg (20,400 pounds) for DOT 105A300W tank cars. Maximum quantity of lading in DOT 105A300W tank cars is 27,216 kg (60,000 pounds). Maximum water capacity is 16,964 kg (37,400 pounds) for DOT 105A500W tank cars and DOT 105A500W tank cars equipped as described in paragraph (a) of this section. Maximum quantity of lading in DOT 105A500W tank cars is 49,895 kg (110,000 pounds).

(f) Tank shell and head thickness for cargo tank motor vehicles and portable tanks must be at least 9.5 mm (0.375 inch) excluding lead lining.

(g) Except as provided in § 173.244(a)(3), tank cars built on or after March 16, 2009 and used for the transportation of bromine must meet the applicable authorized tank car specification listed in the table in § 173.244(a)(2).

[Amdt. 173–224, 55 FR 52663, Dec. 21, 1990, as amended at 56 FR 66275, Dec. 20, 1991; 68 FR 75745, Dec. 31, 2003; 69 FR 76174, Dec. 20, 2004; 74 FR 1800, Jan. 13, 2009; 75 FR 5395, Feb. 2, 2010]

§ 173.251 Bulk packaging for ammonium nitrate emulsion, suspension, or gel.

When § 172.101 of this subchapter specifies that a hazardous material be packaged under this section, only the following bulk packagings are authorized, subject to the requirements of subparts A and B of part 173 of this subchapter and the special provisions specified in column 7 of the § 172.101 table.

(a) *IBCs.* IBCs are authorized subject to the conditions and limitations of this section provided:

(1) The IBC type is authorized according to the IBC packaging code for the specific hazardous material in Column (7) of the § 172.101 Table;

(2) The IBC conforms to the requirements in subpart O of part 178 of this subchapter at the Packing Group performance level in Column (5) of the § 172.101 Table for the material being transported.

(b) [Reserved]

[80 FR 1161, Jan. 8, 2015]

Subpart G—Gases; Preparation and Packaging

§ 173.300 [Reserved]

§ 173.301 General requirements for shipment of compressed gases and other hazardous materials in cylinders, UN pressure receptacles and spherical pressure vessels.

(a) *General qualifications for use of cylinders.* Unless otherwise stated, as used in this section, the term "cylinder" includes a UN pressure receptacle. As used in this subpart, filled or charged means an introduction or presence of a hazardous material in a cylinder. A cylinder filled with a Class 2 hazardous material (gas) and offered for transportation must meet the requirements in this section and §§ 173.301a through 173.305, as applicable.

(1) Compressed gases must be in UN pressure receptacles built in accordance with the UN standards or in metal cylinders and containers built in accordance with the DOT and ICC specifications and part 178 of this subchapter in effect at the time of manufacture, and requalified and marked as prescribed in subpart C in part 180 of this subchapter, if applicable. The DOT and ICC specifications authorized for use are as follows:

Packagings	
2P	4AA480
2Q	4B
ICC–3[1]	4B240ET
3A	4BA
3AA	4BW
3AL	4D
3AX	4DA
3A480X	4DS
3AAX	4E
3B	4L
3BN	8
3E	8AL
3HT	39
3T	

[1] Use of existing cylinders is authorized. New construction is not authorized.

ED_001691B_00009240

(2) A cylinder must be filled in accordance with this part. Before each filling of a cylinder, the person filling the cylinder must visually inspect the outside of the cylinder. A cylinder that has a crack or leak, is bulged, has a defective valve or a leaking or defective pressure relief device, or bears evidence of physical abuse, fire or heat damage, or detrimental rusting or corrosion, may not be filled and offered for transportation. A cylinder may be repaired and requalified only as prescribed in subpart C of part 180 of this subchapter.

(3) Pressure relief devices must be tested for leaks before a filled cylinder is shipped from the cylinder filling plant. It is expressly forbidden to repair a leaking fusible plug device where the leak is through the fusible metal or between the fusible metal and the opening in the plug body, except by removal and replacement of the pressure relief device.

(4) A cylinder that previously contained a Class 8 material must be requalified in accordance with §180.205(e) of this subchapter.

(5) When a cylinder with a marked pressure limit is prescribed, another cylinder made under the same specification but with a higher marked pressure limit is authorized. For example, a cylinder marked "DOT-4B500" may be used when "DOT-4B300" is specified.

(6) No person may fill a cylinder overdue for periodic requalification with a hazardous material and then offer it for transportation. The prohibition against offering a cylinder for transportation that is overdue for periodic requalification does not apply to a cylinder filled prior to the requalification due date.

(7) A cylinder with an authorized service life may not be offered for transportation in commerce after its authorized service life has expired. However, a cylinder in transportation or a cylinder filled prior to the expiration of its authorized service life may be transported for reprocessing or disposal of the cylinder's contents. After emptying, the cylinder must be condemned in accordance with §180.205 of this subchapter.

(8) The pressure of the hazardous material at 55 °C (131 °F) may not exceed ⅘ of the service pressure of the cylinder. Sufficient outage must be provided so the cylinder will not be liquid full at 55 °C (131 °F).

(9) Specification 2P, 2Q, 3E, 3HT, spherical 4BA, 4D, 4DA, 4DS, and 39 cylinders must be packed in strong non-bulk outer packagings. The outside of the combination packaging must be marked with an indication that the inner packagings conform to the prescribed specifications.

(10) Any person who installs a valve into an aluminum cylinder in oxygen service must verify the valve and the cylinder have the same thread type.

(b) *Cylinder markings.* Required markings on a cylinder must be legible and must meet the applicable requirements of subpart C of part 180 of this subchapter. Additional information may be marked on the cylinder provided it does not affect the required markings prescribed in the applicable cylinder specification.

(c) *Toxic gases and mixtures.* Cylinders containing toxic gases and toxic gas mixtures meeting the criteria of Division 2.3 Hazard Zone A or B must conform to the requirements of §173.40 and CGA S–1.1 (compliance with paragraph 9.1.1.1 is not required) (IBR; see §171.7 of this subchapter) and CGA S–7 (IBR; see §171.7 of this subchapter). A DOT 39 cylinder, UN non-refillable cylinder, or a UN composite cylinder certified to ISO–11119–3 may not be used for a toxic gas or toxic gas mixture meeting the criteria for Division 2.3, Hazard Zone A or B.

(d) *Gases capable of combining chemically.* A filled cylinder may not contain any gas or material capable of combining chemically with the cylinder's contents or with the cylinder's material of construction, so as to endanger the cylinder's serviceability.

(e) *Ownership of cylinder.* A cylinder filled with a hazardous material may not be offered for transportation unless it was filled by the owner of the cylinder or with the owner's consent.

(f) *Pressure relief device systems.* (1) Except as provided in paragraphs (f)(5) and (6) of this section, and §171.23(a)(5) of this subchapter, a cylinder filled with a gas and offered for transportation must be equipped with one or more pressure relief devices sized and

ED_001691B_00009240

selected as to type, location, and quantity, and tested in accordance with CGA S–1.1 (compliance with paragraph 9.1.1.1 is not required) and CGA S–7. The pressure relief device must be capable of preventing rupture of the normally filled cylinder when subjected to a fire test conducted in accordance with CGA C–14 (IBR, see §171.7 of this subchapter), or, in the case of an acetylene cylinder, CGA C–12 (IBR, see §171.7 of this subchapter).

(2) A pressure relief device, when installed, must be in communication with the vapor space of a cylinder containing a Division 2.1 (flammable gas) material.

(3) For a specification 3, 3A, 3AA, 3AL, 3AX, 3AXX, 3B, 3BN, or 3T cylinder filled with gases in other than Division 2.2 (except oxygen and oxidizing gases transported by aircraft, see §§173.302(f) and 173.304(f)), beginning with the first requalification due after December 31, 2003, the burst pressure of a CG–1, CG–4, or CG–5 pressure relief device must be at test pressure with a tolerance of plus zero to minus 10%. An additional 5% tolerance is allowed when a combined rupture disk is placed inside a holder. This requirement does not apply if a CG–2, CG–3, or CG–9 thermally activated relief device or a CG–7 reclosing pressure valve is used on the cylinder.

(4) A pressure relief device is required on a DOT 39 cylinder regardless of cylinder size or filled pressure. A DOT 39 cylinder used for liquefied Division 2.1 materials must be equipped with a metal pressure relief device. Fusible pressure relief devices are not authorized on a DOT 39 cylinder containing a liquefied gas.

(5) A pressure relief device is not required on—

(i) A cylinder 305 mm (12 inches) or less in length, exclusive of neck, and 114 mm (4.5 inches) or less in outside diameter, except when the cylinder is filled with a liquefied gas for which this part requires a service pressure of 1800 psig or higher or a nonliquefied gas to a pressure of 1800 psig or higher at 21 °C (70 °F);

(ii) A cylinder with a water capacity of less than 454 kg (1000 lbs) filled with a nonliquefied gas to a pressure of 300 psig or less at 21 °C (70 °F), except for a DOT 39 cylinder or a cylinder used for acetylene in solution; or

(iii) A cylinder containing a Class 3 or a Class 8 material without pressurization, unless otherwise specified for the hazardous material.

(iv) A UN pressure receptacle transported in accordance with paragraph (k) or (l) or this section.

(6) A pressure relief device is prohibited on a cylinder filled with a Division 2.3 or 6.1 material in Hazard Zone A.

(g) *Manifolding cylinders in transportation.* (1) Cylinder manifolding is authorized only under conditions prescribed in this paragraph (g). Manifolded cylinders must be supported and held together as a unit by structurally adequate means. Except for Division 2.2 materials, each cylinder must be equipped with an individual shutoff valve that must be tightly closed while in transit. Manifold branch lines must be sufficiently flexible to prevent damage to the valves that otherwise might result from the use of rigid branch lines. Each cylinder must be individually equipped with a pressure relief device as required in paragraph (f) of this section, except that pressure relief devices on manifolded horizontal cylinders that are mounted on a motor vehicle or framework may be selected as to type, location, and quantity according to the lowest marked pressure limit of an individual cylinder in the manifolded unit. The pressure relief devices selected for the manifolded unit must have been tested in accordance with CGA S–1.1 and CGA S–7. Pressure relief devices on manifolded horizontal cylinders filled with a compressed gas must be arranged to discharge unobstructed to the open air. In addition, for Division 2.1 (flammable gas) material, the pressure relief devices (PRDs) must be arranged to discharge upward to prevent any escaping gas from contacting personnel or any adjacent cylinders. Valves and pressure relief devices on manifolded cylinders filled with a compressed gas must be protected from damage by framing, a cabinet or other method. Manifolding is authorized for cylinders containing the following gases:

(i) Nonliquefied (permanent) compressed gases authorized by §173.302.

ED_001691B_00009240

(ii) Liquefied compressed gases authorized by § 173.304. Each manifolded cylinder containing a liquefied compressed gas must be separately filled and means must be provided to ensure no interchange of cylinder contents can occur during transportation.

(iii) Acetylene as authorized by § 173.303.

(2) For the checking of tare weights or replacing solvent, the cylinder must be removed from the manifold. This requirement is not intended to prohibit filling acetylene cylinders while manifolded.

(h) *Cylinder valve protection.* UN pressure receptacles must meet the valve protection requirements in § 173.301b(c). A DOT specification cylinder used to transport a hazardous material must meet the requirements specified in this paragraph (h).

(1) The following specification cylinders are not subject to the cylinder valve protection requirements in this paragraph (h):

(i) A cylinder containing only a Division 2.2 material without a Division 5.1 subsidiary hazard;

(ii) A cylinder containing a Class 8 liquid corrosive only to metal;

(iii) A cylinder with a water capacity of 4.8 liters (293 in^3) or less containing oxygen, compressed;

(iv) A cylinder containing oxygen, refrigerated liquid (cryogenic liquid);

(v) A Medical E cylinder with a water capacity of 4.9 liters (300 in^3) or less;

(vi) A fire extinguisher; or

(vii) A "B" style cylinder with a capacity of 40 ft^3 (1.13 m^3) or an "MC" style cylinder with a capacity of 10 ft^3 (0.28m^3) containing acetylene.

(2) For cylinders manufactured before October 1, 2007, a cylinder must have its valves protected by one of the following methods:

(i) By equipping the cylinder with securely attached metal caps of sufficient strength to protect valves from damage during transportation;

(ii) By boxing or crating the cylinders so as to protect valves from damage during transportation;

(iii) By constructing the cylinder so that the valve is recessed into the cylinder or otherwise protected to the extent that it will not be subjected to a blow when the container is dropped onto a flat surface; or

(iv) By loading the cylinders in an upright position and securely bracing the cylinders in rail cars or motor vehicles, when loaded by the consignor and unloaded by the consignee.

(3) For cylinders manufactured on or after October 1, 2007, each cylinder valve assembly must be of sufficient strength or protected such that no leakage occurs when a cylinder with the valve installed is dropped 1.8 m (6 ft.) or more onto a non-yielding surface, such as concrete or steel, impacting the valve assembly or protection device at an orientation most likely to cause damage. The cylinder valve assembly protection may be provided by any method meeting the performance requirement in this paragraph (h)(3). Examples include:

(i) Equipping the cylinder with a securely attached metal cap.

(ii) Packaging the cylinder in a box, crate, or other strong outer packaging conforming to the requirements of § 173.25.

(iii) Constructing the cylinder such that the valve is recessed into the cylinder or otherwise protected.

(i) *Cylinders mounted in motor vehicles or in frames.* (1) MEGCs must conform to the requirements in § 173.312. DOT specification cylinders mounted on motor vehicles or in frames must conform to the requirements specified in this paragraph (i).

(2) Seamless DOT specification cylinders longer than 2 m (6.5 feet) are authorized for transportation only when horizontally mounted on a motor vehicle or in an ISO framework or other framework of equivalent structural integrity in accordance with CGA TB–25 (IBR, see § 171.7 of this subchapter). The pressure relief device must be arranged to discharge unobstructed to the open air. In addition, for Division 2.1 (flammable gas) material, the pressure relief devices must be arranged to discharge upward to prevent any escaping gas from contacting personnel or any adjacent cylinders.

(3) Cylinders may not be transported by rail in container on freight car (COFC) or trailer on flat car (TOFC) service except under conditions approved by the Associate Administrator

ED_001691B_00009240

for Safety, Federal Railroad Administration.

(j) *Non-specification cylinders in domestic use.* Except as provided in §§171.12(a) and 171.23(a) of this subchapter, a filled cylinder manufactured to other than a DOT specification or a UN standard in accordance with part 178 of this subchapter, or a DOT exemption or special permit cylinder or a cylinder used as a fire extinguisher in conformance with §173.309(a), may not be transported to, from, or within the United States.

(k) *Metal attachments.* Metal attachments to cylinders must have rounded or chamfered corners, or be otherwise protected, so as to prevent the likelihood of causing puncture or damage to other hazardous materials packages. This requirement applies to anything temporarily or permanently attached to the cylinder, such as metal skids.

(l) *Cylinders made of aluminum alloy 6351–T6.* A DOT 3AL cylinder manufactured of aluminum alloy 6351–T6 may not be filled and offered for transportation or transported with pyrophoric gases. The use of UN cylinders manufactured of aluminum alloy 6351–T6 is prohibited.

[67 FR 51643, Aug. 8, 2002]

EDITORIAL NOTE: For FEDERAL REGISTER citations affecting §173.301, see the List of CFR Sections Affected, which appears in the Finding Aids section of the printed volume and at *www.fdsys.gov*.

§ 173.301a Additional general requirements for shipment of specification cylinders.

(a) *General.* The requirements in this section are in addition to the requirements in §173.301 and apply to the shipment of gases in specification cylinders.

(b) *Authorized cylinders not marked with a service pressure.* For authorized cylinders not marked with a service pressure, the service pressure is designated as follows:

Specification marking	Service Pressure psig
3	1800
3E	1800
8	250

(c) *Cylinder pressure at 21 °C (70 °F).* The pressure in a cylinder at 21 °C (70 °F) may not exceed the service pressure for which the cylinder is marked or designated, except as provided in §173.302a(b). For certain liquefied gases, the pressure at 21 °C (70 °F) must be lower than the marked service pressure to avoid having a pressure at a temperature of 55 °C (131 °F) that is greater than permitted.

(d) *Cylinder pressure at 55 °C (131 °F).* The pressure in a cylinder at 55 °C (131 °F) may not exceed 5/4 times the service pressure, except:

(1) For a cylinder filled with acetylene, liquefied nitrous oxide, or carbon dioxide.

(2) For a cylinder filled in accordance with §173.302a(b), the pressure in the cylinder at 55 °C (131 °F) may not exceed 5/4 times the filling pressure.

(3) The pressure at 55 °C (131 °F) of Hazard Zone A and Hazard Zone B materials may not exceed the service pressure of the cylinder. Sufficient outage must be provided so that the cylinder will not be liquid full at 55 °C (131 °F).

(e) *Grandfather clause.* A cylinder in domestic use prior to the date on which the specification for the cylinder was first made effective may be used if the cylinder has been properly tested and otherwise conforms to the requirements applicable to the gas with which it is charged.

[67 FR 51645, Aug. 8, 2002, as amended at 67 FR 61289, Sept. 30, 2002; 68 FR 24661, May 8, 2003; 76 FR 56317, Sept. 13, 2011]

§ 173.301b Additional general requirements for shipment of UN pressure receptacles.

(a) *General.* The requirements of this section are in addition to the requirements in §173.301 and apply to the shipment of gases in UN pressure receptacles. A UN pressure receptacle, including closures, must conform to the design, construction, inspection and testing requirements specified in parts 178 and 180 of this subchapter, as applicable. Bundles of cylinders must conform to the requirements in §178.70(e) of this subchapter.

(1) A UN pressure receptacle may not be filled and offered for transportation when damaged to such an extent that the integrity of the UN pressure receptacle or its service equipment may be

ED_001691B_00009240

affected. Prior to filling, the service equipment must be examined and found to be in good working condition (see §178.70(d) of this subchapter). In addition, the required markings must be legible on the pressure receptacle.

(2) The gases or gas mixtures must be compatible with the UN pressure receptacle and valve materials as prescribed for metallic materials in ISO 11114–1 (IBR, see §171.7 of this subchapter) and for non-metallic materials in ISO 11114–2 (IBR, see §171.7 of this subchapter).

(3) A refillable UN pressure receptacle may not be filled with a gas or gas mixture different from that previously contained in the UN pressure receptacle unless the necessary operations for change of gas service have been performed in accordance with ISO 11621 (IBR, see §171.7 of this subchapter).

(4) When a strong outer packaging is prescribed, for example as provided by paragraph (c)(2)(vi) or (d)(1) of this section, the UN pressure receptacles must be protected to prevent movement. Unless otherwise specified in this part, more than one UN pressure receptacle may be enclosed in the strong outer packaging.

(b) *Individual shut-off valves and pressure relief devices.* Except for Division 2.2 permanent gases, each UN pressure receptacle must be equipped with an individual shutoff valve that must be tightly closed while in transit. Each UN pressure receptacle must be individually equipped with a pressure relief device as prescribed by §173.301(f), except that pressure relief devices on bundles of cylinders or manifolded horizontal cylinders must have a set-to-discharge pressure that is based on the lowest marked pressure of any cylinder in the bundle or manifolded unit.

(c) *Pressure receptacle valve requirements.* (1) When the use of a valve is prescribed, the valve must conform to the requirements in ISO 10297:2006 (IBR, see §171.7 of this subchapter). Until December 31, 2008, the manufacture of a valve conforming to the requirements in ISO 10297:1999 (IBR, see §171.7 of this subchapter) is authorized.

(2) A UN pressure receptacle must have its valves protected from damage that could cause inadvertent release of the contents of the UN pressure receptacle by one of the following methods:

(i) By constructing the pressure receptacle so that the valves are recessed inside the neck of the UN pressure receptacle and protected by a threaded plug or cap;

(ii) By equipping the UN pressure receptacle with a valve cap conforming to the requirements in ISO 11117:2008 and Technical Corrigendum 1 (IBR, see §171.7 of this subchapter). Until December 31, 2014, the manufacture of a valve cap conforming to the requirements in ISO 11117:1998 (IBR, see §171.7 of this subchapter) is authorized. The cap must have vent-holes of sufficient cross-sectional area to evacuate the gas if leakage occurs at the valve;

(iii) By protecting the valves by shrouds or guards conforming to the requirements in ISO 11117:2008 and Technical Corrigendum 1 (IBR; *see* §171.7 of this subchapter). Until December 31, 2014, the manufacture of a shroud or guard conforming to the requirements in ISO 11117:1998 (IBR, see §171.7 of this subchapter) is authorized. For metal hydride storage systems, by protecting the valves in accordance with the requirements in ISO 16111:2008 (IBR; *see* §171.7 of this subchapter).

(iv) By using valves designed and constructed with sufficient inherent strength to withstand damage in accordance with Annex B of ISO 10297;

(v) By enclosing the UN pressure receptacles in frames, e.g., bundles of cylinders; or

(vi) By packing the UN pressure receptacles in a strong outer package, such as a box or crate, capable of meeting the drop test specified in §178.603 of this subchapter at the Packing Group I performance level.

(d) *Non-refillable UN pressure receptacles.* (1) When the use of a valve is prescribed, the valve must conform to the requirements in ISO 13340 (IBR, see §171.7 of this subchapter);

(2) The receptacles must be transported as an inner package of a combination package;

(3) The receptacle must have a water capacity not exceeding 1.25 L when used for a flammable or toxic gas or 50 liters for receptacles used to contain chemical under pressure; and

ED_001691B_00009240

(4) The receptacle is prohibited for Hazard Zone A material.

(e) *Pyrophoric gases.* A UN pressure receptacle must have valve outlets equipped with gas-tight plugs or caps when used for pyrophoric or flammable mixtures of gases containing more than 1% pyrophoric compounds. When UN pressure receptacles are manifolded in a bundle, each of the pressure receptacles must be equipped with an individual valve that must be closed while in transportation, and the outlet of the manifold valve must be equipped with a pressure retaining gas-tight plug or cap. Gas-tight plugs or caps must have threads that match those of the valve outlets.

(f) *Hydrogen bearing gases.* A steel UN pressure receptacle bearing an "H" mark must be used for hydrogen bearing gases or other embrittling gases that have the potential of causing hydrogen embrittlement.

(g) *Composite cylinders in underwater use.* A composite cylinder certified to ISO–11119–2 or ISO–11119–3 may not be used for underwater applications unless the cylinder is manufactured in accordance with the requirements for underwater use and is marked "UW" as prescribed in §178.71(o)(17) of this subchapter.

[71 FR 33882, June 12, 2006, as amended at 71 FR 54395, Sept. 14, 2006; 76 FR 3380, Jan. 19, 2011; 78 FR 1091, Jan. 7, 2013; 78 FR 65485, Oct. 31, 2013; 80 FR 1161, Jan. 8, 2015]

§ 173.302 Filling of cylinders with non-liquefied (permanent) compressed gases or adsorbed gases.

(a) *General requirements.* A cylinder filled with a non-liquefied compressed gas (except gas in solution) must be offered for transportation in accordance with the requirements of this section and §173.301. In addition, a DOT specification cylinder must meet the requirements in §§173.301a, 173.302a and 173.305, as applicable. UN pressure receptacles must meet the requirements in §§173.301b and 173.302b, as applicable. Where more than one section applies to a cylinder, the most restrictive requirements must be followed.

(b) *Aluminum cylinders in oxygen service.* Each aluminum cylinder filled with oxygen must meet all of the following conditions:

(1) Metallic portions of a valve that may come into contact with the oxygen in the cylinder must be constructed of brass or stainless steel.

(2) Except for UN cylinders, each cylinder opening must be configured with straight threads only.

(3) Each UN pressure receptacle must be cleaned in accordance with the requirements of ISO 11621 (IBR, see §171.7 or this subchapter). Each DOT cylinder must be cleaned in accordance with the requirements of GSA Federal Specification RR–C–901D, paragraphs 3.3.1 and 3.3.2 (IBR, see §171.7 of this subchapter). Cleaning agents equivalent to those specified in Federal Specification RR–C–901D may be used provided they do not react with oxygen. One cylinder selected at random from a group of 200 or fewer and cleaned at the same time must be tested for oil contamination in accordance with Federal Specification RR–C–901D, paragraph 4.3.2, and meet the specified standard of cleanliness.

(4) The pressure in each cylinder may not exceed 3000 psig at 21 °C (70 °F).

(c) Notwithstanding the provisions of §173.24(b)(1) and paragraph (f) of this section, an authorized cylinder containing oxygen continuously fed to tanks containing live fish may be offered for transportation and transported.

(d) Shipment of Division 2.1 materials in aluminum cylinders is authorized for transportation only by motor vehicle, rail car, or cargo-only aircraft.

(e) *DOT 3AL cylinders manufactured of 6351–T6 aluminum alloy.* Suitable safeguards should be provided to protect personnel and facilities should failure occur while filling cylinders manufactured of aluminum alloy 6351–T6 used in self-contained underwater breathing apparatus (SCUBA), self-contained breathing apparatus (SCBA) or oxygen service. The cylinder filler should allow only those individuals essential to the filling process to be in the vicinity of the cylinder during the filling process.

(f) *Compressed oxygen and oxidizing gases by aircraft.* A cylinder containing oxygen, compressed; compressed gas, oxidizing, n.o.s.; or nitrogen trifluoride is authorized for transportation by aircraft only when it meets the following requirements:

ED_001691B_00009240

(1) Only DOT specification 3A, 3AA, 3AL, 3E, 3HT, and 39 cylinders, and UN pressure receptacles ISO 9809–1, ISO 9809–2, ISO 9809–3 and ISO 7866 cylinders are authorized.

(2) Cylinders must be equipped with a pressure relief device in accordance with § 173.301(f) and, for DOT 39 cylinders offered for transportation after October 1, 2008, for the other DOT specification cylinders with the first requalification due after October 1, 2008, or for the UN pressure receptacles prior to initial use:

(i) The rated burst pressure of a rupture disc for DOT 3A, 3AA, 3AL, 3E, and 39 cylinders, and UN pressure receptacles ISO 9809–1, ISO 9809–2, ISO 9809–3 and ISO 7866 cylinders must be 100% of the cylinder minimum test pressure with a tolerance of plus zero to minus 10%; and

(ii) The rated burst pressure of a rupture disc for a DOT 3HT cylinder must be 90% of the cylinder minimum test pressure with a tolerance of plus zero to minus 10%.

(3) The cylinder must be placed in a rigid outer packaging that—

(i) Conforms to the requirements of either part 178, subparts L and M of this subchapter at the Packing Group I or II performance level or the performance criteria in Air Transport Association (ATA) Specification No. 300 for a Category I Shipping Container;

(ii) Is capable of passing, as demonstrated by design testing, the Flame Penetration Resistance Test in appendix E to part 178 of this subchapter; and

(iii) Prior to each shipment, passes a visual inspection that verifies that all features of the packaging are in good condition, including all latches, hinges, seams, and other features, and that the packaging is free from perforations, cracks, dents, or other abrasions that may negatively affect the flame penetration resistance and thermal resistance characteristics of the packaging.

(4) The cylinder and the outer packaging must be capable of passing, as demonstrated by design testing, the Thermal Resistance Test specified in appendix D to part 178 of this subchapter.

(5) The cylinder and the outer packaging must both be marked and labeled in accordance with part 172, subparts D and E of this subchapter. The additional marking "DOT31FP," is allowed to indicate that the cylinder and the outer packaging are capable of passing, as demonstrated by design testing, the Thermal Resistance Test specified in appendix D to part 178 of this subchapter.

(6) A cylinder of compressed oxygen that has been furnished by an aircraft operator to a passenger in accordance with 14 CFR § 121.574, § 125.219, or § 135.91 is excepted from the outer packaging requirements of paragraph (f)(3) of this section.

[67 FR 51646, Aug. 8, 2002, as amended at 67 FR 61289, Sept. 30, 2002; 68 FR 75745, Dec. 31, 2003; 71 FR 33883; June 12, 2006; 71 FR 51127, Aug. 29, 2006; 72 FR 55098, Sept. 28, 2007; 76 FR 56317, Sept. 13, 2011; 80 FR 1161, Jan. 8, 2015]

EDITORIAL NOTE: At 80 FR 1161, Jan. 8, 2015, § 173.302 was amended in part by revising paragraphs (a)(1) and (a)(2). These revisions could not be performed due to inaccurate regulatory instruction.

§ 173.302a Additional requirements for shipment of nonliquefied (permanent) compressed gases in specification cylinders.

(a) *Detailed filling requirements.* Nonliquefied compressed gases (except gas in solution) for which filling requirements are not specifically prescribed in § 173.304a must be shipped subject to the requirements in this section and §§ 173.301, 173.301a, 173.302, and 173.305 in specification cylinders, as follows:

(1) DOT 3, 3A, 3AA, 3AL, 3B, 3E, 4B, 4BA and 4BW cylinders.

(2) DOT 3HT cylinders. These cylinders are authorized for aircraft use only and only for nonflammable gases. They have a maximum service life of 24 years from the date of manufacture. The cylinders must be equipped with frangible disc type pressure relief devices that meet the requirements of § 173.301(f). Each frangible disc must have a rated bursting pressure not exceeding 90 percent of the minimum required test pressure of the cylinder. Discs with fusible metal backing are not permitted. Specification 3HT cylinders may be offered for transportation only when packaged in accordance with § 173.301(a)(9).

(3) DOT 39 *DOT 39 cylinders.* When the cylinder is filled with a Division 2.1 material, the internal volume of the

ED_001691B_00009240

cylinder may not exceed 1.23 L (75 in^3) or 50 L (3050 in^3) for chemical under pressure.

(4) DOT 3AX, 3AAX, and 3T cylinders are authorized for Division 2.1 and 2.2 materials and for carbon monoxide. DOT 3T cylinders are not authorized for hydrogen. When used in methane service, the methane must be a non-liquefied gas with a minimum purity of 98.0 percent methane and commercially free of corroding components.

(5) Aluminum cylinders manufactured in conformance with specifications DOT 39 and 3AL are authorized for oxygen only under the conditions specified in § 173.302(b).

(b) *Special filling limits for DOT 3A, 3AX, 3AA, 3AAX, and 3T cylinders.* A DOT 3A, 3AX, 3AA, 3AAX, and 3T cylinder may be filled with a compressed gas, other than a liquefied, dissolved, Division 2.1, or Division 2.3 gas, to a pressure 10 percent in excess of its marked service pressure, provided:

(1) The cylinder is equipped with a frangible disc pressure relief device (without fusible metal backing) having a bursting pressure not exceeding the minimum prescribed test pressure.

(2) The cylinder's elastic expansion was determined at the time of the last test or retest by the water jacket method.

(3) Either the average wall stress or the maximum wall stress does not exceed the wall stress limitation shown in the following table:

Type of steel	Average wall stress limitation	Maximum wall stress limitation
I. Plain carbon steels over 0.35 carbon and medium manganese steels	53,000	58,000
II. Steels of analysis and heat treatment specified in spec. 3AA	67,000	73,000
III. Steels of analysis and heat treatment specified in spec. DOT-3T	87,000	94,000
IV. Plain carbon steels less than 0.35 carbon made prior to 1920	45,000	48,000

(i)(A) The average wall stress must be computed from the elastic expansion data using the following formula:

$$S = 1.7EE / KV - 0.4P$$

Where:

S = wall stress, pounds per square inch;

EE = elastic expansion (total less permanent) in cubic centimeters;

K = factor $\times 10^{-7}$ experimentally determined for the particular type of cylinder being tested or derived in accordance with CGA C–5 (IBR, see § 171.7 of this subchapter);

V = internal volume in cubic centimeter (1 cubic inch = 16.387 cubic centimeters);

P = test pressure, pounds per square inch.

(B) The formula in paragraph (b)(3)(i)(A) of this section is derived from the formula in paragraph (b)(3)(ii) of this section and the following:

$$EE = (PKVD^2) / (D^2 - d^2)$$

(ii) The maximum wall stress must be computed from the formula:

$$S = (P(1.3D^2 + 0.4d^2)) / (D^2 - d^2)$$

Where:

S = wall stress, pounds per square inch;

P = test pressure, pounds per square inch;

D = outside diameter, inches;

d = D–2t, where t = minimum wall thickness determined by a suitable method.

(iii) Compliance with average wall stress limitation may be determined by computing the elastic expansion rejection limit in accordance with CGA C–5, by reference to data tabulated in CGA C–5, or by the manufacturer's marked elastic expansion rejection limit (REE) on the cylinder.

(4) An external and internal visual examination made at the time of test or retest shows the cylinder to be free from excessive corrosion, pitting, or dangerous defects.

(5) A plus sign (+) is added following the test date marking on the cylinder to indicate compliance with paragraphs (b) (2), (b)(3), and (b)(4) of this section.

(c) *Carbon monoxide.* Carbon monoxide must be offered in a DOT 3, 3A, 3AX, 3AA, 3AAX, 3AL, 3E, or 3T cylinder having a minimum service pressure of 1800 psig. The pressure in a steel cylinder may not exceed 1000 psig at 21 °C (70 °F), except that if the gas is dry and sulfur free, the cylinder may be filled to ⅝ of the cylinder's service pressure or 2000 psig, whichever is less. A DOT 3AL cylinder may be filled to its marked service pressure. A DOT 3AL cylinder is authorized only when transported by motor vehicle, rail car, or cargo-only aircraft.

(d) *Diborane and diborane mixtures.* Diborane and diborane mixed with

ED_001691B_00009240

compatible compressed gas must be offered in a DOT 3AL1800 or 3AA1800 cylinder. The maximum filling density of the diborane may not exceed 7 percent. Diborane mixed with compatible compressed gas may not have a pressure exceeding the service pressure of the cylinder if complete decomposition of the diborane occurs. Cylinder valve assemblies must be protected in accordance with § 173.301(h).

(e) *Fluorine.* Fluorine must be shipped in specification 3A1000, 3AA1000, or 3BN400 cylinders without pressure relief devices and equipped with valve protection cap. The cylinder may not be charged to over 400 psig at 21 °C (70 °F) and may not contain over 2.7 kg (6 lbs) of gas.

[67 FR 51646, Aug. 8, 2002, as amended at 68 FR 75745, Dec. 31, 2003; 70 FR 34075, June 13, 2005; 71 FR 54395, Sept. 14, 2006; 72 FR 4455, Jan. 31, 2007; 72 FR 55098, Sept. 28, 2007; 78 FR 1091, Jan. 7, 2013]

§ 173.302b Additional requirements for shipment of non-liquefied (permanent) compressed gases in UN pressure receptacles.

(a) *General.* A cylinder filled with a non-liquefied gas must be offered for transportation in UN pressure receptacles subject to the requirements in this section and § 173.302. In addition, the requirements in §§ 173.301 and 173.301b must be met.

(b) *UN pressure receptacles filling limits.* A UN pressure receptacle is authorized for the transportation of non-liquefied compressed gases as specified in this section. Except where filling limits are specifically prescribed in this section, the working pressure of a UN pressure receptacle may not exceed ⅔ of the test pressure of the receptacle. Alternatively, the filling limits specified for non-liquefied gases in Table 1 of P200 of the UN Recommendations (IBR, see § 171.7 of this subchapter) are authorized. In no case may the internal pressure at 65 °C (149 °F) exceed the test pressure.

(c) *Fluorine, compressed, UN 1045 and Oxygen difluoride, compressed, UN 2190.* Fluorine, compressed and Oxygen difluoride, compressed must be packaged in a UN pressure receptacle with a minimum test pressure of 200 bar and a maximum working pressure not to exceed 30 bar. A UN pressure receptacle made of aluminum alloy is not authorized. The maximum quantity of gas authorized in each UN pressure receptacle is 5 kg.

(d) *Diborane and diborane mixtures, UN 1911.* Diborane and diborane mixtures must be packaged in a UN pressure receptacle with a minimum test pressure of 250 bar and a maximum filling ratio dependent on the test pressure not to exceed 0.07. Filling should be further limited so that if complete decomposition of diborane occurs, the pressure of diborane or diborane mixtures will not exceed the working pressure of the cylinder. The use of UN tubes and MEGCs is not authorized.

(e) *Carbon monoxide, compressed UN 1016.* Carbon monoxide, compressed is authorized in UN pressure receptacles. The settled pressure in a steel pressure receptacle containing carbon monoxide may not exceed ⅓ of the pressure receptacle's test pressure at 65 °C (149 °F) except, if the gas is dry and sulfur-free, the settled pressure may not exceed ½ of the marked test pressure.

[71 FR 33883, June 12, 2006]

§ 173.302c Additional requirements for the shipment of adsorbed gases in UN pressure receptacles.

(a) A cylinder filled with an adsorbed gas must be offered for transportation in UN pressure receptacles subject to the requirements in this section and § 173.302, as well as, §§ 173.301 and 173.301b.

(b) The pressure of each filled cylinder must be less than 101.3 kPa at 20 °C (68 °F) and must not exceed 300 kPa at 50 °C (122 °F).

(c) The minimum test pressure of the cylinder must be 21 bar.

(d) The minimum burst pressure of the cylinder must be 94.5 bar.

(e) The internal pressure at 65 °C (149 °F) of the filled cylinder must not exceed the test pressure of the cylinder.

(f) The adsorbent material must be compatible with the cylinder and must not form harmful or dangerous compounds with the gas to be adsorbed. The gas in combination with the adsorbent material must not affect or weaken the cylinder or cause a dangerous reaction (*e.g.*, a catalyzing reaction).

ED_001691B_00009240

(g) The quality of the adsorbent material must be verified at the time of each fill to assure the pressure and chemical stability requirements of this section are met each time an adsorbed gas package is offered for transport.

(h) The adsorbent material must not meet the definition of any other hazard class.

(i) Cylinders and closures containing toxic gases with an LC50 less than or equal to 200 ml/m3 (ppm) (see the following Adsorbed Gases Table) must meet the following requirements:

(1) Valve outlets must be fitted with pressure retaining gas-tight plugs or caps having threads matching those of the valve outlets.

(2) Each valve must either be of the packless type with non-perforated diaphragm, or be of a type which prevents leakage through or past the packing.

(3) Each cylinder and closure must be tested for leakage after filling.

(4) Each valve must be capable of withstanding the test pressure of the cylinder and be directly connected to the cylinder by either a taper-thread or other means which meets the requirements of ISO 10692–2 (IBR, see §171.7 of this subchapter); and

(5) Cylinders and valves must not be fitted with a pressure relief device.

(j) Valve outlets for cylinders containing pyrophoric gases must be fitted with gas-tight plugs or caps having threads matching those of the valve outlets.

(k) The filling procedure must be in accordance with Annex A of ISO 11513 (IBR, see §171.7 of this subchapter).

(l) The maximum period for periodic requalification must be in accordance with §180.207(c) of this subchapter.

ADSORBED GASES TABLE

ID No.	Hazardous material	LC_{50} ml/m³	Notes
3510	Adsorbed gas, flammable, n.o.s.		z.
3511	Adsorbed gas, n.o.s.		z.
3512	Adsorbed gas, toxic, n.o.s.	≤5000	z.
3513	Adsorbed gas, oxidizing, n.o.s.		z.
3514	Adsorbed gas, toxic, flammable, n.o.s.	≤5000	z.
3515	Adsorbed gas, toxic, oxidizing, n.o.s.	≤5000	z.
3516	Adsorbed gas, toxic, corrosive, n.o.s.	≤5000	z.
3517	Adsorbed gas, toxic, flammable, corrosive, n.o.s.	≤5000	z.
3518	Adsorbed gas, toxic, oxidizing, corrosive, n.o.s.	≤5000	z.
3519	Boron trifluoride, adsorbed	387	a.
3520	Chlorine, adsorbed	293	a.
3521	Silicon tetrafluoride, adsorbed	450	a.
3522	Arsine, adsorbed	20	d.
3523	Germane, adsorbed	620	d, r.
3524	Phosphorus pentafluoride, adsorbed	190	
3525	Phosphine, adsorbed	20	d.
3526	Hydrogen selenide, adsorbed	2	

Notes:

a: Aluminum alloy cylinders must not be used.

d: When steel cylinders are used, only those bearing the "H" mark in accordance with § 173.302b(f) are authorized.

r: The filling of this gas must be limited such that, if complete decomposition occurs, the pressure does not exceed two thirds of the test pressure of the cylinder.

z: The construction materials of the cylinders and their accessories must be compatible with the contents and must not react to form harmful or dangerous compounds therewith.

[80 FR 1161, Jan. 8, 2015]

§ 173.303 Charging of cylinders with compressed gas in solution (acetylene).

(a) *Cylinder, filler and solvent requirements.* (Refer to applicable parts of Specification 8 and 8AL). Acetylene gas must be shipped in Specification 8 or 8AL cylinders (§178.59 or §178.60 of this subchapter). The cylinders shall consist of metal shells filled with a porous material, and this material must be charged with a suitable solvent. The cylinders containing the porous material and solvent shall be successfully tested in accordance with CGA C–12 (IBR, see §171.7 of this subchapter). Representative samples of cylinders charged with acetylene must be successfully tested in accordance with CGA C–12.

ED_001691B_00009240

(b) *Filling limits.* For DOT specification cylinders, the pressure in the cylinder containing acetylene gas may not exceed 250 psig at 70 °F. If cylinders are marked for a lower allowable charging pressure at 70 °F., that pressure must not be exceeded. For UN cylinders, the pressure in the cylinder may not exceed the limits specified in § 173.304b(b)(2).

(c) *Data requirements on filler and solvent.* Cylinders containing acetylene gas must not be shipped unless they were charged by or with the consent of the owner, and by a person, firm, or company having possession of complete information as to the nature of the porous filling, the kind and quantity of solvent in the cylinders, and the meaning of such markings on the cylinders as are prescribed by the Department's regulations and specifications applying to containers for the transportation of acetylene gas.

(d) *Verification of container pressure.* (1) Each day, the pressure in a container representative of that day's compression must be checked by the charging plant after the container has cooled to a settled temperature and a record of this test kept for at least 30 days.

(e) *Prefill requirements.* Before each filling of an acetylene cylinder, the person filling the cylinder must visually inspect the outside of the cylinder in accordance with the prefill requirements contained in CGA C–13, Section 3 (IBR, see § 171.7 of this subchapter).

(f) *UN cylinders.* (1) UN cylinders and bundles of cylinders are authorized for the transport of acetylene gas as specified in this section. Each UN acetylene cylinder must conform to ISO 3807–2 (IBR, see § 171.7 of this subchapter), have a homogeneous monolithic porous mass filler and be charged with acetone or a suitable solvent as specified in the standard. UN acetylene cylinders must have a minimum test pressure of 52 bar and may be filled up to the pressure limits specified in ISO 3807–2. The use of UN tubes and MEGCs is not authorized.

(2) UN cylinders equipped with pressure relief devices or that are manifolded together must be transported upright.

[29 FR 18743, Dec. 29, 1964. Redesignated at 32 FR 5606, Apr. 5, 1967]

EDITORIAL NOTE: For FEDERAL REGISTER citations affecting § 173.303, see the List of CFR Sections Affected, which appears in the Finding Aids section of the printed volume and at *www.fdsys.gov*.

§ 173.304 Filling of cylinders with liquefied compressed gases.

(a) *General requirements.* A cylinder filled with a liquefied compressed gas (except gas in solution) must be offered for transportation in accordance with the requirements of this section and the general requirements in § 173.301. In addition, a DOT specification cylinder must meet the requirement in §§ 173.301a, 173.304a, and 173.305, as applicable. UN pressure receptacles must be shipped in accordance with the requirements in 173.301b and 173.304b, as applicable.

(1) A DOT 3AL cylinder may not be used for any material with a primary or subsidiary hazard of Class 8.

(2) Shipments of Division 2.1 materials in aluminum cylinders are authorized only when transported by motor vehicle, rail car, or cargo-only aircraft.

(b) *Filling limits.* Except for carbon dioxide; 1,1-Difluoroethylene (R–1132A); nitrous oxide; and vinyl fluoride, inhibited, the liquid portion of a liquefied gas may not completely fill the packaging at any temperature up to and including 55 °C (131 °F). The liquid portion of vinyl fluoride, inhibited, may completely fill the cylinder at 55 °C (131 °F) provided the pressure at the critical temperature does not exceed 1.25 times the service pressure of the cylinder.

(c) *Mixture of compressed gas and other material.* A mixture of compressed gas must be shipped in accordance with § 173.305.

(d) *Refrigerant and dispersant gases.* Nontoxic and nonflammable refrigerant or dispersant gases must be offered for transportation in cylinders prescribed in § 173.304a, or in DOT 2P and 2Q containers (§§ 178.33, 178.33a of this subchapter). DOT 2P and 2Q containers must be packaged in a strong

ED_001691B_00009240

wooden or fiberboard box of such design as to protect valves from damage or accidental functioning under conditions incident to transportation. Pressure in the inside metal containers may not exceed 87 psia at 21 °C (70 °F). Each completed metal container filled for shipment must be heated until its contents reach a minimum temperature of 55 °C (131 °F) without evidence of leakage, distortion, or other defect. Each outside package must be plainly marked "INSIDE CONTAINERS COMPLY WITH PRESCRIBED SPECIFICATIONS".

(e) *Engine starting fluid.* Engine starting fluid containing a flammable compressed gas or gases must be shipped in a cylinder as prescribed in § 173.304a or as follows:

(1) Inside non-refillable metal containers having a capacity not greater than 500 mL (32 in^3). The containers must be packaged in strong, tight outer packagings. The pressure in the container may not exceed 145 psia at 54 °C (130 °F). If the pressure exceeds 145 psia at 54 °C (130 °F), a DOT 2P container must be used. In either case, the metal container must be capable of withstanding, without bursting, a pressure of 1.5 times the pressure of the contents at 54 °C (130 °F). The liquid content of the material and gas may not completely fill the container at 54 °C (130 °F). Each container filled for shipment must have been heated until its contents reach a minimum temperature of 54 °C (130 °F), without evidence of leakage, distortion, or other defect. Each outside shipping container must be plainly marked, "INSIDE CONTAINERS COMPLY WITH PRESCRIBED SPECIFICATIONS".

(2) [Reserved]

(f) *Oxidizing gases by aircraft.* A cylinder containing carbon dioxide and oxygen mixture, compressed; liquefied gas, oxidizing, n.o.s.; or nitrous oxide is authorized for transportation by aircraft only when it meets the following requirements:

(1) Only DOT specification 3A, 3AA, 3AL, 3E, 3HT, and 39 cylinders, and UN pressure receptacles ISO 9809–1, ISO 9809–2, ISO 9809–3 and ISO 7866 cylinders are authorized.

(2) Cylinders must be equipped with a pressure relief device in accordance with § 173.301(f) and, for DOT 39 cylinders offered for transportation after October 1, 2008, for the other DOT specification cylinders with the first requalification due after October 1, 2008, or for the UN pressure receptacles prior to initial use:

(i) The rated burst pressure of a rupture disc for DOT 3A, 3AA, 3AL, 3E and 39 cylinders, and UN pressure receptacles ISO 9809–1, ISO 9809–2, ISO 9809–3 and ISO 7866 cylinders must be 100% of the cylinder minimum test pressure with a tolerance of plus zero to minus 10%; and

(ii) The rated burst pressure of a rupture disc for a DOT 3HT cylinder must be 90% of the cylinder minimum test pressure with a tolerance of plus zero to minus 10%.

(3) The cylinder must be placed in a rigid outer packaging that—

(i) Conforms to the requirements of either part 178, subparts L and M, of this subchapter at the Packing Group I or II performance level, or the performance criteria in Air Transport Association (ATA) Specification No. 300 for a Category I Shipping Container;

(ii) Is capable of passing, as demonstrated by design testing, the Flame Penetration Resistance Test in appendix E to part 178 of this subchapter; and

(iii) Prior to each shipment, passes a visual inspection that verifies that all features of the packaging are in good condition, including all latches, hinges, seams, and other features, and the packaging is free from perforations, cracks, dents, or other abrasions that may negatively affect the flame penetration resistance and thermal resistance characteristics of the container.

(4) The cylinder and the outer packaging must be capable of passing, as demonstrated by design testing, the Thermal Resistance Test specified in appendix D to part 178 of this subchapter.

(5) The cylinder and the outer packaging must both be marked and labeled in accordance with part 172, subparts D and E of this subchapter. The additional marking "DOT31FP," is allowed to indicate that the cylinder and the outer packaging are capable of passing, as demonstrated by design testing, the Thermal Resistance Test specified in

ED_001691B_00009240

appendix D to part 178 of this subchapter.

(6) A cylinder of compressed oxygen that has been furnished by an aircraft operator to a passenger in accordance with 14 CFR 121.574, 125.219, or 135.91 is excepted from the outer packaging requirements of paragraph (f)(3) of this section.

[67 FR 51647, Aug. 8, 2002, as amended at 68 FR 24661, May 8, 2003; 71 FR 33883, June 12, 2006; 72 FR 55098, Sept. 28, 2007; 74 FR 53188, Oct. 16, 2009; 76 FR 56317, Sept. 13, 2011; 78 FR 60754, Oct. 2, 2013]

§ 173.304a Additional requirements for shipment of liquefied compressed gases in specification cylinders.

(a) *Detailed filling requirements.* Liquefied gases (except gas in solution) must be offered for transportation, subject to the requirements in this section and §§ 173.301 and 173.304, in specification cylinders, as follows:

(1) DOT 3, 3A, 3AA, 3AL, 3B, 3BN, 3E, 4B, 4BA, 4B240ET, 4BW, 4E, 39, except that no DOT 4E or 39 packaging may be filled and shipped with a mixture containing a pyrophoric liquid, carbon bisulfide (disulfide), ethyl chloride, ethylene oxide, nickel carbonyl, spirits of nitroglycerin, or toxic material (Division 6.1 or 2.3), unless specifically authorized in this part.

(2) For the gases named, the following requirements apply (for cryogenic liquids, see § 173.316):

Kind of gas	Maximum permitted filling density (percent) (see Note 1)	Packaging marked as shown in this column or of the same type with higher service pressure must be used, except as provided in §§ 173.301(l), 173.301a(e), and 180.205(a) (see notes following table)
Anhydrous ammonia	54	DOT-3A480; DOT-3AA480; DOT-3A480X; DOT-4AA480; DOT-3; DOT-3E1800; DOT-3AL480.
Bromotrifluoromethane (R–13B1 or H–1301)	124	DOT-3A400; DOT-3AA400; DOT-3B400; DOT-4AA480; DOT-4B400; DOT-4BA400; DOT-4BW400; DOT-3E1800; DOT-39; DOT-3AL400.
Carbon dioxide (*see* Notes 4, 7, and 8)	68	DOT-3A1800; DOT-3AX1800; DOT-3AA1800; DOT-3AAX1800; DOT-3; DOT-3E1800; DOT-3T1800; DOT-3HT2000; DOT-39; DOT-3AL1800.
Carbon dioxide, refrigerated liquid (*see* paragraph (e) of this section).		DOT-4L.
Chlorine (*see* Note 2)	125	DOT-3A480; DOT-3AA480; DOT-3; DOT-3BN480; DOT-3E1800.
Chlorodifluroethane or 1-Chloro-1, 1-difluoroethane (R–142b).	100	DOT-3A150; DOT-3AA150; DOT-3B150; DOT-4B150; DOT-4BA225; DOT-4BW225; DOT-3E1800; DOT-39; DOT-3AL150.
Chlorodifluoromethane (R–22) (*see* Note 8)	105	DOT-3A240; DOT-3AA240; DOT-3B240; DOT-4B240; DOT-4BA240; DOT-4BW240; DOT-4B240ET; DOT-4E240; DOT-39; DOT-3E1800; DOT-3AL240.
Chloropentafluorethane (R–115)	110	DOT-3A225; DOT-3AA225; DOT-3B225; DOT-4BA225; DOT-4B225; DOT-4BW225; DOT-3E1800; DOT-39; DOT-3AL225.
Chlorotrifluoromethane (R–13) (*see* Note 8)	100	DOT-3A1800; DOT-3AA1800; DOT-3; DOT-3E1800; DOT-39; DOT-3AL1800.
Cyclopropane (*see* Note 8)	55	DOT-3A225; DOT-3A480X; DOT-3AA225; DOT-3B225; DOT-4AA480; DOT4B225; DOT-4BA225; DOT-4BW225; DOT-4B240ET; DOT-3; DOT-3E1800; DOT-39; DOT-3AL225.
Dichlorodifluoromethane (R–12) (*see* Note 8)	119	DOT-3A225; DOT-3AA225; DOT-3B225; DOT-4B225; DOT-4BA225; DOT-4BW225; DOT-4B240ET; DOT-4E225; DOT-39; DOT-3E1800; DOT-3AL225.
Dichlorodifluoromethane and difluoroethane mixture (constant boiling mixture) (R–500) (*see* Note 8).	Not liquid full at 131 °F	DOT-3A240; DOT-3AA240; DOT-3B240; DOT-3E1800; DOT-4B240; DOT-4BA240; DOT-4BW240; DOT-4E240; DOT-39.
1,1-Difluoroethane (R–152a) (*see* note 8)	79	DOT-3A150; DOT-3AA150; DOT-3B150; DOT-4B150; DOT-4BA225; DOT-4BW225; DOT-3E1800; DOT-3AL150.
1,1-Difluoroethylene (R–1132A)	73	DOT-3A2200; DOT-3AA2200; DOT-3AX2200; DOT-3AAX2200; DOT-3T2200; DOT-39.

ED_001691B_00009240

Kind of gas	Maximum permitted filling density (percent) (see Note 1)	Packaging marked as shown in this column or of the same type with higher service pressure must be used, except as provided in §§ 173.301(l), 173.301a(e), and 180.205(a) (see notes following table)
Dimethylamine, anhydrous	59	DOT-3A150; DOT-3AA150; DOT-3B150; DOT-4B150; DOT-4BA225; DOT-4BW225; ICC–3E1800.
Ethane (*see* Note 8)	35.8	DOT-3A1800; DOT-3AX1800; DOT-3AA1800; DOT-3AAX1800; DOT-3; DOT-3E1800; DOT-3T1800; DOT-39; DOT-3AL1800.
Ethane (*see* Note 8)	36.8	DOT-3A2000; DOT-3AX2000; DOT-3AA2000; DOT-3AAX2000; DOT-3T2000; DOT-39; DOT-3AL2000.
Ethylene (*see* Note 8)	31.0	DOT-3A1800; DOT-3AX1800; DOT-3AA1800; DOT-3AAX1800; DOT-3; DOT-3E1800; DOT-3T1800; DOT-39; DOT-3AL1800.
Ethylene (*see* Note 8)	32.5	DOT-3A2000; DOT-3AX2000; DOT-3AA2000; DOT-3AAX2000; DOT-3T2000; DOT-39; DOT-3AL2000.
Ethylene (*see* Note 8)	35.5	DOT-3A2400; DOT-3AX2400; DOT-3AA2400; DOT-3AAX2400; DOT-3T2400; DOT-39; DOT-3AL2400.
Hydrogen chloride, anhydrous	65	DOT-3A1800; DOT-3AA1800; DOT-3AX1800; DOT-3AAX1800; DOT-3; DOT-3T1800; DOT-3E1800.
Hydrogen sulfide (*see* Notes 10 and 14)	62.5	DOT-3A; DOT-3AA; DOT-3B; DOT-4A; DOT-4B; DOT-4BA; DOT-4BW; DOT-3E1800; DOT-3AL.
Insecticide, gases liquefied (*see* Notes 8 and 12)	Not liquid full at 131 °F	DOT-3A300; DOT-3AA300; DOT-3B300; DOT-4B300; DOT-4BA300; DOT-4BW300; DOT-3E1800.
Liquefied nonflammable gases, other than classified flammable, corrosive, toxic & mixtures or solution thereof filled w/nitrogen, carbon dioxide, or air (*see* Notes 7 and 8)..	Not liquid full at 131 °F	Specification packaging authorized in paragraph (a)(1) of this section and DOT-3HT; DOT 4D; DOT-4DA; DOT-4DS.
Methyl acetylene-propadiene, mixtures, stabilized; (*see* Note 5)..	Not liquid at 131 °F	DOT-4B240 without brazed seams; DOT-4BA240 without brazed seams; DOT-3A240; DOT-3AA240; DOT-3B240; DOT-3E1800; DOT-4BW240; DOT-4E240; DOT-4B240ET; DOT-3AL240.
Methyl chloride	84	DOT-3A225; DOT-3AA225; DOT-3B225; DOT-4B225; DOT-4BA225; DOT-4BW225; DOT-3; DOT-3E1800; DOT-4B240ET. Cylinders complying with DOT-3A150; DOT-3B150; and DOT-4B150 manufactured prior to Dec. 7, 1936 are also authorized.
Methyl mercaptan	80	DOT-3A240; DOT-3AA240; DOT-3B240; OT-4B240; DOT-4B240ET; DOT-3E1800; DOT-4BA240; DOT-4BW240.
Nitrosyl chloride	110	DOT-3BN400 only.
Nitrous oxide (*see* Notes 7, 8, and 11)	68	DOT-3A1800; DOT-3AX1800; DOT-3AA1800; DOT-3AAX1800; DOT-3; DOT-3E1800; DOT-3T1800; DOT-3HT2000; DOT-39; DOT-3AL1800.
Nitrous oxide, refrigerated liquid (*see* paragraph (e) of this section.).		DOT-4L.
Refrigerant gas, n.o.s. or Dispersant gas, n.o.s. (*see* Notes 8 and 13).	Not liquid full at 130 °F	DOT-3A240; DOT-3AA240; DOT-3B240; DOT-3E1800; DOT-4B240; DOT-4BA240; DOT-4BW240; DOT-4E240; DOT-39; DOT-3AL240.
Sulfur dioxide (*see* note 8)	125	DOT-3A225; DOT-3AA225; DOT-3B225; DOT-4B225; DOT-4BA225; DOT-4BW225; DOT-4B240ET; DOT-3; DOT-39; DOT-3E1800; DOT-3AL225.
Sulfur hexafluoride	120	DOT-3A1000; DOT-3AA1000; DOT-AAX2400; DOT-3; DOT-3AL1000; DOT-3E1800; DOT-3T1800.
Sulfuryl fluoride	106	DOT-3A480; DOT-3AA480; DOT-3E1800; DOT-4B480; DOT-4BA480; DOT-4BW480.
Tetrafluoroethylene, stabilized	90	DOT-3A1200; DOT-3AA1200; DOT-3E1800.
Trifluorochloroethylene, stabilized	115	DOT-3A300; DOT-3AA300; DOT-3B300; DOT-4B300; DOT-4BA300; DOT-4BW300; DOT-3E1800.

ED_001691B_00009240

Kind of gas	Maximum permitted filling density (percent) (see Note 1)	Packaging marked as shown in this column or of the same type with higher service pressure must be used, except as provided in §§ 173.301(l), 173.301a(e), and 180.205(a) (see notes following table)
Trimethylamine, anhydrous	57	DOT-3A150; DOT-3AA150; DOT-3B150; DOT-4B150; DOT-4BA225; DOT-4BW225; DOT-3E1800.
Vinyl chloride (*see* Note 5)	84	DOT-4B150 without brazed seams; DOT-4BA225 without brazed seams; DOT-4BW225; DOT-3A150; DOT-3AA150; DOT-3E1800; DOT-3AL150.
Vinyl fluoride, stabilized	62	DOT-3A1800; DOT-3AA1800; DOT-3E1800; DOT-3AL1800.
Vinyl methyl ether, stabilized(*see* Note 5)	68	DOT-4B150, without brazed seams; DOT-4BA225 without brazed seams; DOT-4BW225; DOT-3A150; DOT-3AA150; DOT-3B1800; DOT-3E1800.

NOTE 1: "Filling density" means the percent ratio of the weight of gas in a packaging to the weight of water that the container will hold at 16 °C (60 °F). (1 lb of water = 27.737 in^3 at 60 °F.).

NOTE 2: Cylinders purchased after Oct. 1, 1944, for the transportation of chlorine must contain no aperture other than that provided in the neck of the cylinder for attachment of a valve equipped with an approved pressure relief device. Cylinders purchased after Nov. 1, 1935, and filled with chlorine may not contain over 68.04 kg (150 lb) of gas.

NOTE 3: [Reserved]

NOTE 4: Special carbon dioxide mining devices containing a heating element and filled with not over 2.72 kg (6 lb) of carbon dioxide may be filled to a density of not over 85 percent, provided the cylinder is made of steel with a calculated bursting pressure in excess of 39000 psig, fitted with a frangible disc that will operate at not over 57 percent of that pressure, and is able to withstand a drop of 10 feet when striking crosswise on a steel rail while under a pressure of at least 3000 psig. Such devices must be shipped in strong boxes or must be wrapped in heavy burlap and bound by 12-gauge wire with the wire completely covered by friction tape. Wrapping must be applied so as not to interfere with the functioning of the frangible disc pressure relief device. Shipments must be described as "liquefied carbon dioxide gas (mining device)" and marked, labeled, and certified as prescribed for liquefied carbon dioxide.

NOTE 5: All parts of valve and pressure relief devices in contact with contents of cylinders must be of a metal or other material, suitably treated if necessary, that will not cause formation of any acetylides.

NOTE 6: [Reserved]

NOTE 7: Specification 3HT cylinders for aircraft use only, having a maximum service life of 24 years. Authorized only for nonflammable gases. Cylinders must be equipped with pressure relief devices of the frangible disc type that meet the requirements of § 173.301(f). Each frangible disc must have a rated bursting pressure that does not exceed 90 percent of the minimum required test pressure of the cylinder. Discs with fusible metal backing are not permitted. Cylinders may be offered for transportation only when packaged in accordance with § 173.301(a)(9).

NOTE 8: *See* § 173.301(a)(9).

NOTE 9: [Reserved]

NOTE 10: Each valve outlet must be sealed by a threaded cap or a threaded solid plug.

NOTE 11: Must meet the valve and cleaning requirements in § 173.302(b).

NOTE 12: For an insecticide gas that is nontoxic and nonflammable, *see* § 173.305(c).

NOTE 13: For a refrigerant or dispersant gas that is nontoxic and nonflammable, *see* § 173.304(d).

NOTE 14: The use of DOT specification cylinder with a marked service pressure of 480 psi is authorized until December 31, 2003.

(b) [Reserved]

(c) *Verification of content in cylinder.* Except as noted in paragraph (d)(4) of this section, the amount of liquefied gas filled into a cylinder must be by weight or, when the gas is lower in pressure than required for liquefaction, a pressure-temperature chart for the specific gas may be used to ensure that the service pressure at 55 °C (131 °F) will not exceed ¾ of the service pressure at 21 °C (70 °F). The weight of liquefied gas filled into the cylinder also must be checked, after disconnecting the cylinder from the filling line, by the use of an accurate scale.

(d) Requirements for liquefied petroleum gas. (1) Filling density limits are as follows:

Minimum specific gravity of liquid material at 60 °F	Maximum the filling density in percent of the water-weight capacity of the cylinder
0.271 to 0.289	26
0.290 to 0.306	27
0.307 to 0.322	28
0.323 to 0.338	29
0.339 to 0.354	30
0.355 to 0.371	31
0.372 to 0.398	32
0.399 to 0.425	33
0.426 to 0.440	34
0.441 to 0.452	35
0.453 to 0.462	36
0.463 to 0.472	37
0.473 to 0.480	38
0.481 to 0.488	39
0.489 to 0.495	40
0.496 to 0.503	41
0.504 to 0.510	42
0.511 to 0.519	43
0.520 to 0.527	44
0.528 to 0.536	45
0.537 to 0.544	46
0.545 to 0.552	47
0.553 to 0.560	48
0.561 to 0.568	49
0.569 to 0.576	50

ED_001691B_00009240

Minimum specific gravity of liquid material at 60 °F	Maximum the filling density in percent of the water-weight capacity of the cylinder
0.577 to 0.584	51
0.585 to 0.592	52
0.593 to 0.600	53
0.601 to 0.608	54
0.609 to 0.617	55
0.618 to 0.626	56
0.627 to 0.634	57

(2) Subject to §173.301a(d), any filling density percentage prescribed in this section is authorized to be increased by a factor of 2 for liquefied petroleum gas in DOT 3 cylinders or in DOT 3A cylinders marked for 1800 psig, or higher, service pressure.

(3) Liquefied petroleum gas must be shipped in specification cylinders as follows:

(i) DOT 3, 3A, 3AA, 3B, 3E, 3AL, 4B, 4BA, 4B240ET, 4BW, 4E, or 39 cylinders. Shipments of flammable gases in DOT 3AL cylinders are authorized only when transported by motor vehicle, rail car, or cargo-only aircraft.

(ii) Additional containers may be used within the limits of quantity and pressure as follows:

Type of container	Maximum capacity (cubic inches)	Maximum filling pressure (psig)
DOT-2P or DOT-2Q (see Note 1)	31.83	45 psig at 70 °F and 105 psig at 130 °F (see Note 2).
DOT-2P or DOT-2Q (see Note 1)	31.83	35 psig at 70 °F and 100 psig at 130 °F.

NOTE 1: Containers must be packed in strong wooden or fiber boxes of such design as to protect valves from damage or accidental functioning under conditions normally incident to transportation. Each completed container filled for shipment must have been heated until its contents reach a temperature of 54 °C (130 °F), without evidence of leakage, distortion, or other defect. Each outside shipping container must be plainly marked "INSIDE CONTAINERS COMPLY WITH PRESCRIBED SPECIFICATIONS'.

NOTE 2: A container must be equipped with a pressure relief device that will prevent rupture of the container and dangerous projection of a closing device when exposed to fire.

(4) *Verification of content.* A cylinder with a water capacity of 90.72 kg (200 lb) or more and for use with a liquefied petroleum gas with a specific gravity of 0.504 or greater at 16 °C (60 °F) may have the quantity of its contents determined by using a fixed length dip tube gauging device. The length of the dip tube must be such that when a liquefied petroleum gas, with a specific volume of 0.03051 cu. ft./lb. at a temperature of 40 °F, is filled into the container, the liquid just reaches the bottom of the tube. The weight of this liquid may not exceed 42 percent of the water capacity of the container, which must be stamped on the cylinder. The length of the dip tube, expressed in inches carried out to one decimal place and prefixed with the letters "DT", must be stamped on the container and on the exterior of removable type dip tube. For the purpose of this requirement, the marked length must be expressed as the distance measured along the axis of a straight tube from the top of the boss through which the tube is inserted to the proper level of the liquid in the container. The length of each dip tube must be checked when installed by weighing each container after filling except when installed in groups of substantially identical containers, in which case one of each 25 containers must be weighed. The quantity of liquefied gas in each container must be checked by means of the dip tube after disconnecting from the filling line. The outlet from the dip tube may not be larger than 0.1016 centimeters (0.040 inch; No. 54 drill bit size orifice). A container representative of each day's filling at each filling plant must have its contents checked by weighing after disconnecting from the filling line.

(e) *Carbon dioxide, refrigerated liquid or nitrous oxide, refrigerated liquid.* (1) The following provisions apply to carbon dioxide, refrigerated liquid, and nitrous oxide, refrigerated liquid:

(i) DOT 4L cylinders conforming to the provisions of this paragraph are authorized.

(ii) Each cylinder must be protected with at least one pressure relief device and at least one frangible disc conforming to §173.301(f) and paragraph (a)(2) of this section. The relieving capacity of the pressure relief device system must be equal to or greater than that calculated by the applicable formula in paragraph 5.8.3 of CGA S–1.1 (IBR, see §171.7 of this subchapter).

ED_001691B_00009240

(iii) The temperature and pressure of the gas at the time the shipment is offered for transportation may not exceed −18 °C (0 °F) and 290 psig for carbon dioxide and −15.6 °C (+ 4 °F) and 290 psig for nitrous oxide. Maximum time in transit may not exceed 120 hours.

(2) The following pressure relief device settings, design service temperatures and filling densities apply:

Pressure relief device setting maximum start—to discharge gauge pressure in psig	Maximum permitted filling density (percent by weight)	
	Carbon dioxide, refrigerated liquid	Nitrous oxide, refrigerated liquid
105 psig	108	104
170 psig	105	101
230 psig	104	99
295 psig	102	97
360 psig	100	95
450 psig	98	83
540 psig	92	87
625 psig	86	80
Design service temperature °C (°F)	−196 °C (−320 °F)	−196 °C (−320 °F)

[67 FR 51647, Aug. 8, 2002, as amended at 68 FR 24661, May 8, 2003; 68 FR 57632, Oct. 6, 2003; 68 FR 75742, Dec. 31, 2003; 70 FR 34076, June 13, 2005; 72 FR 4456, Jan. 31, 2007; 72 FR 55098, Sept. 28, 2007; 73 FR 4719, Jan. 28, 2008]

EDITORIAL NOTE: At 70 FR 34076, June 13, 2005, § 173.304a was amended in the table in paragraph (a)(2) by removing the phrase "DOT–4A480" from the entry "Hydrogen sulfide"; however, the amendment could not be incorporated because that phrase does not exist in the entry.

§ 173.304b Additional requirements for shipment of liquefied compressed gases in UN pressure receptacles.

(a) *General.* Liquefied gases and gas mixtures must be offered for transportation in UN pressure receptacles subject to the requirements in this section and § 173.304. In addition, the general requirements applicable to UN pressure receptacles in §§ 173.301 and 173.301b must be met.

(b) *UN pressure receptacle filling limits.* A UN pressure receptacle is authorized for the transportation of liquefied compressed gases and gas mixtures as specified in this section. When a liquefied compressed gas or gas mixture is transported in a UN pressure receptacle, the filling ratio may not exceed the maximum filling ratio prescribed in this section and the applicable ISO standard. Compliance with the filling limits may be determined by referencing the numerical values and data in Table 2 of P200 of the UN Recommendations (IBR, see § 171.7 of this subchapter). Alternatively, the maximum allowable filling limits may be determined as follows:

(1) For high pressure liquefied gases, in no case may the filling ratio of the settled pressure at 65 °C (149 °F) exceed the test pressure of the UN pressure receptacle.

(2) For low pressure liquefied gases, the filling factor (maximum mass of contents per liter of water capacity) must be less than or equal to 95 percent of the liquid phase at 50 °C. In addition, the UN pressure receptacle may not be liquid full at 60 °C. The test pressure of the pressure receptacle must be equal to or greater than the vapor pressure of the liquid at 65 °C.

(3) For high pressure liquefied gases or gas mixtures, the maximum filling ratio may be determined using the formulas in (3)(b) of P200 of the UN Recommendations.

(4) For low pressure liquefied gases or gas mixtures, the maximum filling ratio may be determined using the formulas in (3)(c) of P200 of the UN Recommendations.

(c) Tetraflouroethylene, stabilized, UN1081 must be packaged in a pressure receptacle with a minimum test pressure of 200 bar and a working pressure not exceeding 5 bar.

ED_001691B_00009240

(d) Fertilizer ammoniating solution with free ammonia, UN1043 is not authorized in UN tubes or MEGCs.

[74 FR 2265, Jan. 14, 2009]

§ 173.305 Charging of cylinders with a mixture of compressed gas and other material.

(a) *Detailed requirements.* A mixture of a compressed gas and any other material must be shipped as a compressed gas if the mixture is a compressed gas as designated in § 173.115 and when not in violation of § 173.301(a).

(b) *Filling limits.* (See § 173.301.) For mixtures, the liquid portion of the liquefied compressed gas at 131 °F. plus any additional liquid or solid must not completely fill the container.

(c) *Nonpoisonous and nonflammable mixtures.* Mixtures containing compressed gas or gases including insecticides, which mixtures are nonpoisonous and nonflammable under this part must be shipped in cylinders as prescribed in § 173.304(a) or as follows:

(1) Specification 2P (§ 178.33 of this subchapter). Inside metal containers equipped with safety relief devices of a type examined by the Bureau of Explosives and approved by the Associate Administrator, and packed in strong wooden or fiber boxes of such design as to protect valves from damage or accidental functioning under conditions incident to transportation. Pressure in the container may not exceed 85 psia at 70 °F. Each completed metal container filled for shipment must be heated until content reaches a minimum temperature of 130 °F., without evidence of leakage, distortion or other defect. Each outside shipping container must be plainly marked "INSIDE CONTAINERS COMPLY WITH PRESCRIBED SPECIFICATIONS."

(2) [Reserved]

(d) *Poisonous mixtures.* A mixture containing any poisonous material (Division 6.1 or 2.3) in such proportions that the mixture would be classed as poisonous under § 173.115 or § 173.132 must be shipped in packagings as authorized for these poisonous materials.

[29 FR 18743, Dec. 29, 1964. Redesignated at 32 FR 5606, Apr. 5, 1967, and amended by Amdt. 173–70, 38 FR 5309, Feb. 27, 1973, Amdt. 173–94, 41 FR 16079, Apr. 15, 1976; 45 FR 32697, May 19, 1980; Amdt. 173–224, 56 FR 66275, 66279, Dec. 20, 1991; 66 FR 45379, Aug. 28, 2001; 67 FR 61013, Sept. 27, 2002; 67 FR 51651, Aug. 8, 2002; 68 FR 24662, May 8, 2003]

§ 173.306 Limited quantities of compressed gases.

(a) Limited quantities of compressed gases for which exceptions are permitted as noted by reference to this section in § 172.101 of this subchapter are excepted from labeling, except when offered for transportation or transported by air, and, unless required as a condition of the exception, specification packaging requirements of this subchapter when packaged in accordance with the following paragraphs. For transportation by aircraft, the package must conform to the applicable requirements of § 173.27 of this subchapter and only packages of hazardous materials authorized aboard passenger-carrying aircraft may be transported as a limited quantity. In addition, shipments are not subject to subpart F (Placarding) of part 172 of this subchapter, to part 174 of this subchapter except § 174.24, and to part 177 of this subchapter except § 177.817. Each package may not exceed 30 kg (66 pounds) gross weight.

(1) When in containers of not more than 4 fluid ounces capacity (7.22 cubic inches or less) except cigarette lighters. Additional exceptions for certain compressed gases in limited quantities and the ORM–D hazard class are provided in paragraph (i) of this section.

(2) When in metal containers filled with a material that is not classed as a hazardous material to not more than 90 percent of capacity at 70 °F. and then charged with nonflammable, nonliquefied gas. Each container must be tested to three times the pressure at 70 °F. and, when refilled, be retested to three times the pressure of the gas at 70 °F. Also, one of the following conditions must be met:

(i) Container is not over 0.95 L (1 quart) capacity and charged to not more than 11.17 bar (482.63 kPa, 170

ED_001691B_00009240

psig) at 21 °C (70 °F), and must be packed in a strong outer packaging, or

(ii) Container is not over 30 gallons capacity and charged to not more than 75 psig at 70 °F.

(3) When in a metal container for the sole purpose of expelling a nonpoisonous (other than a Division 6.1 Packing Group III material) liquid, paste or powder, provided all of the following conditions are met. Additional exceptions for certain compressed gases in limited quantities and the ORM–D hazard class are provided in paragraph (i) of this section.

(i) Capacity must not exceed 1 L(61.0 cubic inches).

(ii) Pressure in the container must not exceed 180 psig at 130 °F. If the pressure exceeds 140 psig at 130 °F., but does not exceed 160 psig at 130 °F., a specification DOT 2P (§178.33 of this subchapter) inside metal container must be used; if the pressure exceeds 160 psig at 130 °F., a specification DOT 2Q (§178.33a of this subchapter) inside metal container must be used. In any event, the metal container must be capable of withstanding without bursting a pressure of one and one-half times the equilibrium pressure of the content at 130 °F.

(iii) Liquid content of the material and gas must not completely fill the container at 130 °F.

(iv) The container must be packed in strong outside packagings.

(v) Each container, after it is filled, must be subjected to a test performed in a hot water bath; the temperature of the bath and the duration of the test must be such that the internal pressure reaches that which would be reached at 55 °C (131 °F) (50 °C (122 °F) if the liquid phase does not exceed 95% of the capacity of the container at 50 °C (122 °F)). If the contents are sensitive to heat, the temperature of the bath must be set at between 20 °C (68 °F) and 30 °C (86 °F) but, in addition, one container in 2,000 must be tested at the higher temperature. No leakage or permanent deformation of a container may occur.

(vi) Each outside packaging must be marked "INSIDE CONTAINERS COMPLY WITH PRESCRIBED REGULATIONS."

(4) Gas samples must be transported under the following conditions:

(i) A gas sample may only be transported as non-pressurized gas when its pressure corresponding to ambient atmospheric pressure in the container is not more than 105 kPa absolute (15.22 psia).

(ii) Non-pressurized gases, toxic (or toxic and flammable) must be packed in hermetically sealed glass or metal inner packagings of not more than one L (0.3 gallons) overpacked in a strong outer packaging.

(iii) Non-pressurized gases, flammable must be packed in hermetically sealed glass or metal inner packagings of not more than 5 L (1.3 gallons) and overpacked in a strong outer packaging.

(5) For limited quantities of Division 2.2 gases with no subsidiary risk, when in a plastic container for the sole purpose of expelling a liquid, paste or powder, provided all of the following conditions are met. Additional exceptions for certain compressed gases in limited quantities and the ORM–D hazard class are provided in paragraph (i) of this section.

(i) Capacity must not exceed 1 L (61.0 cubic inches).

(ii) Pressure in the container must not exceed 160 psig at 130 °F. If the pressure in the container is less than 140 psig at 130 °F, a non-DOT specification container may be used. If the pressure in the container exceeds 140 psig at 130 °F but does not exceed 160 psig at 130 °F, the container must conform to specification DOT 2S. All non-DOT specification and specification DOT 2S containers must be capable of withstanding, without bursting, a pressure of one and one-half times the equilibrium pressure of the contents at 130 °F.

(iii) Liquid content of the material and gas must not completely fill the container at 130 °F.

(iv) The container must be packed in strong outside packagings.

(v) Except as provided in paragraph (a)(5)(vi) of this section, each container must be subjected to a test performed in a hot water bath; the temperature of the bath and the duration of the test must be such that the internal pressure reaches that which would be reached at 55 °C (131 °F) or 50 °C (122 °F) if the liquid phase does not exceed 95% of the

ED_001691B_00009240

capacity of the container at 50 °C (122 °F). If the contents are sensitive to heat, or if the container is made of plastic material which softens at this test temperature, the temperature of the bath must be set at between 20 °C (68 °F) and 30 °C (86 °F) but, in addition, one container in 2,000 must be tested at the higher temperature. No leakage or permanent deformation of a container may occur except that a plastic container may be deformed through softening provided that it does not leak.

(vi) As an alternative to the hot water bath test in paragraph (a)(5)(v) of this section, testing may be performed as follows:

(A) *Pressure and leak testing before filling.* Each empty container must be subjected to a pressure equal to or in excess of the maximum expected in the filled containers at 55 °C (131 °F) (or 50 °C (122 °F) if the liquid phase does not exceed 95 percent of the capacity of the container at 50 °C (122 °F). This must be at least two-thirds of the design pressure of the container. If any container shows evidence of leakage at a rate equal to or greater than 3.3×10^{-2} mbar L/s at the test pressure, distortion or other defect, it must be rejected; and

(B) *Testing after filling.* Prior to filling, the filler must ensure that the crimping equipment is set appropriately and the specified propellant is used before filling the container. Once filled, each container must be weighed and leak tested. The leak detection equipment must be sufficiently sensitive to detect at least a leak rate of 2.0×10^{-3} mbar L/s at 20 °C (68 °F). Any filled container which shows evidence of leakage, deformation, or excessive weight must be rejected.

(vi) Each outside packaging must be marked "INSIDE CONTAINERS COMPLY WITH PRESCRIBED REGULATIONS."

(b) *Exceptions for foodstuffs, soap, biologicals, electronic tubes, and audible fire alarm systems.* Limited quantities of compressed gases (except Division 2.3 gases) for which exceptions are provided as indicated by reference to this section in § 172.101 of this subchapter, when accordance with one of the following paragraphs, are excepted from labeling, except when offered for transportation or transported by aircraft, and the specification packaging requirements of this subchapter. For transportation by aircraft, the package must conform to the applicable requirements of § 173.27 of this subchapter and only packages of hazardous materials authorized aboard passenger-carrying aircraft may be transported as a limited quantity. In addition, shipments are not subject to subpart F (Placarding) of part 172 of this subchapter, to part 174 of this subchapter, except § 174.24, and to part 177 of this subchapter, except § 177.817. Additional exceptions for certain compressed gases in limited quantities and the ORM–D hazard class are provided in paragraph (i) of this section.

(1) Foodstuffs or soaps in a nonrefillable metal or plastic container not exceeding 1 L (61.0 cubic inches), with soluble or emulsified compressed gas, provided the pressure in the container does not exceed 140 psig at 130 °F. Plastic containers must only contain Division 2.2 non-flammable soluble or emulsified compressed gas. The metal or plastic container must be capable of withstanding, without bursting, a pressure of one and one-half times the equilibrium pressure of the contents at 130 °F.

(i) Containers must be packed in strong outside packagings.

(ii) Liquid content of the material and the gas must not completely fill the container at 130 °F.

(iii) Each outside packaging must be marked "INSIDE CONTAINERS COMPLY WITH PRESCRIBED REGULATIONS."

(2) Cream in refillable metal or plastic containers with soluble or emulsified compressed gas. Plastic containers must only contain Division 2.2 non-flammable soluble or emulsified compressed gas. Containers must be of such design that they will hold pressure without permanent deformation up to 375 psig and must be equipped with a device designed so as to release pressure without bursting of the container or dangerous projection of its parts at higher pressures. This exception applies to shipments offered for transportation by refrigerated motor vehicles only.

ED_001691B_00009240

(3) Nonrefillable metal or plastic containers charged with a Division 6.1 Packing Group III or nonflammable solution containing biological products or a medical preparation which could be deteriorated by heat, and compressed gas or gases. Plastic containers must only contain 2.2 non-flammable soluble or emulsified compressed gas. The capacity of each container may not exceed 35 cubic inches (19.3 fluid ounces). The pressure in the container may not exceed 140 psig at 130 °F, and the liquid content of the product and gas must not completely fill the containers at 130 °F. One completed container out of each lot of 500 or less, filled for shipment, must be heated, until the pressure in the container is equivalent to equilibrium pressure of the contents at 130 °F. There must be no evidence of leakage, distortion, or other defect. The container must be packed in strong outside packagings.

(4) Electronic tubes, each having a volume of not more than 30 cubic inches and charged with gas to a pressure of not more than 35 psig and packed in strong outside packagings.

(5) Audible fire alarm systems powered by a compressed gas contained in an inside metal container when shipped under the following conditions:

(i) Each inside container must have contents which are not flammable, poisonous, or corrosive as defined under this part,

(ii) Each inside container may not have a capacity exceeding 35 cubic inches (19.3 fluid ounces),

(iii) Each inside container may not have a pressure exceeding 70 psig at 70 °F. and the liquid portion of the gas may not completely fill the inside container at 130 °F., and

(iv) Each nonrefillable inside container must be designed and fabricated with a burst pressure of not less than four times its charged pressure at 130 °F. Each refillable inside container must be designed and fabricated with a burst pressure of not less than five times its charged pressure at 130 °F.

(c)–(d) [Reserved]

(e) *Refrigerating machines.* (1) New (unused) refrigerating machines or components thereof are excepted from the specification packaging requirements of this part if they meet the following conditions. In addition, shipments are not subject to subpart F of part 172 of this subchapter, to part 174 of this subchapter except § 174.24 and to part 177 of this subchapter except § 177.817.

(i) Each pressure vessel may not contain more than 5,000 pounds of Group A1 refrigerant as classified in ANSI/ASHRAE Standard 15 or not more than 50 pounds of refrigerant other than Group A1.

(ii) Machines or components having two or more charged vessels may not contain an aggregate of more than 2,000 pounds of Group I refrigerant or more than 100 pounds of refrigerant other than Group I.

(iii) Each pressure vessel must be equipped with a safety device meeting the requirements of ANSI/ASHRAE 15 (IBR, see § 171.7 of this subchapter).

(iv) Each pressure vessel must be equipped with a shut-off valve at each opening except openings used for safety devices and with no other connection. These valves must be closed prior to and during transportation.

(v) Pressure vessels must be manufactured, inspected and tested in accordance with ANSI/ASHRAE 15, or when over 6 inches internal diameter, in accordance with Section VIII of the ASME Code (IBR, see § 171.7 of this subchapter).

(vi) All parts subject to refrigerant pressure during shipment must be tested in accordance with ANSI/ASHRAE 15.

(vii) The liquid portion of the refrigerant, if any, may not completely fill any pressure vessel at 130 °F.

(viii) The amount of refrigerant, if liquefied, may not exceed the filling density prescribed in § 173.304.

(f) *Accumulators (Articles, pressurized pneumatic or hydraulic containing nonflammable gas).* The following applies to accumulators, which are hydraulic accumulators containing nonliquefied, nonflammable gas, and nonflammable liquids or pneumatic accumulators containing nonliquefied, nonflammable gas, fabricated from materials which will not fragment upon rupture.

(1) Accumulators installed in motor vehicles, construction equipment, and assembled machinery and designed and fabricated with a burst pressure of not

ED_001691B_00009240

less than five times their charged pressure at 70 °F., when shipped, are not subject to the requirements of this subchapter.

(2) Accumulators charged with limited quantities of compressed gas to not more than 200 p.s.i.g. at 70 °F. are excepted from labeling (except when offered for transportation by air) and the specification packaging requirements of this subchapter when shipped under the following conditions. In addition, shipments are not subject to subpart F of part 172 of this subchapter, to part 174 of this subchapter except §174.24 and to part 177 of this subchapter except §177.817.

(i) Each accumulator must be shipped as an inside packaging,

(ii) Each accumulator may not have a gas space exceeding 2,500 cubic inches under stored pressure, and

(iii) Each accumulator must be tested, without evidence of failure or damage, to at least three times its charged pressure of 70 °F., but not less than 120 p.s.i. before initial shipment and before each refilling and reshipment.

(3) Accumulators with a charging pressure exceeding 200 p.s.i.g. at 70 °F. are excepted from labeling (except when offered for transportation by air) and the specification packaging requirements of this subchapter when shipped under the following conditions:

(i) Each accumulator must be in compliance with the requirements stated in paragraph (f)(2), (i), (ii), and (iii) of this section, and

(ii) Each accumulator must be designed and fabricated with a burst pressure of not less than five times its charged pressure at 70 °F. when shipped.

(4) Accumulators intended to function as shock absorbers, struts, gas springs, pneumatic springs or other impact or energy-absorbing devices are not subject to the requirements of this subchapter provided each:

(i) Has a gas space capacity not exceeding 1.6 L and a charge pressure not exceeding 280 bar, where the product of the capacity expressed in liters and charge pressure expressed in bars does not exceed 80 (for example, 0.5 L gas space and 160 bar charge pressure);

(ii) Has a minimum burst pressure of 4 times the charge pressure at 20 °C for products not exceeding 0.5 L gas space capacity and 5 times the charge pressure for products greater than 0.5 L gas space capacity;

(iii) Design type has been subjected to a fire test demonstrating that the article relieves its pressure by means of a fire degradable seal or other pressure relief device, such that the article will not fragment and that the article does not rocket; and

(iv) Accumulators must be manufactured under a written quality assurance program which monitors parameters controlling burst strength, burst mode and performance in a fire situation as specified in paragraphs (f)(4)(i) through (f)(4)(iii) of this section. A copy of the quality assurance program must be maintained at each facility at which the accumulators are manufactured.

(5) Accumulators not conforming to the provisions of paragraphs (f)(1) through (f) (4) of this section, may only be transported subject to the approval of the Associate Administrator.

(g) *Water pump system tank.* Water pump system tanks charged with compressed air or limited quantities of nitrogen to not over 40 psig for single-trip shipment to installation sites are excepted from labeling (transportation by air not authorized) and the specification packaging requirements of this subchapter when shipped under the following conditions. In addition, shipments are not subject to subpart F of this subchapter, to part 174 of this subchapter except §174.24 and part 177 except §177.817.

(1) The tank must be of steel, welded with heads concave to pressure, having a rated water capacity not exceeding 120 gallons and with outside diameter not exceeding 24 inches. Safety relief devices not required.

(2) The tank must be pneumatically tested to 100 psig. Test pressure must be permanently marked on the tank.

(3) The stress at prescribed pressure must not exceed 20,000 psi using formula:

$$S = Pd / 2t$$

where:

S = wall stress in psi:

P = prescribed pressure for the tank of at least 3 times charged pressure at 70 °F or 100 psig, whichever is greater;

ED_001691B_00009240

d = inside diameter in inches;
t = minimum wall thickness, in inches.

(4) The burst pressure must be at least 6 times the charge pressure at 70 °F.

(5) Each tank must be overpacked in a strong outer packaging in accordance with § 173.301(h).

(h) *Lighter refills.* (1) Lighter refills (see § 171.8 of this subchapter) must not contain an ignition element but must contain a release device. Lighter refills offered for transportation under this section may not exceed 4 fluid ounces capacity (7.22 cubic inches) or contain more than 65 grams of a Division 2.1 fuel. For transportation by highway or rail, lighter refills must be tightly packed and secured against movement in strong outer packagings. For transportation by aircraft or vessel, lighter refills must be tightly packed and secured against movement in any rigid specification outer packaging authorized in subpart L of part 178 of this subchapter at the Packing Group II performance level.

(2) *Exceptions.* (i) For other than transportation by aircraft, exceptions for certain compressed gases in limited quantities and the ORM–D hazard class are provided in paragraph (i) of this section.

(ii) For highway transportation, when no more than 1,500 lighter refills covered by this paragraph are transported in one motor vehicle, the requirements of subparts C through H of part 172, and part 177 of this subchapter do not apply. Lighter refills covered under this paragraph must be packaged in rigid, strong outer packagings meeting the general packaging requirements of subpart B of this part. Outer packagings must be plainly and durably marked on two opposing sides or ends with the words "LIGHTER REFILLS" and the number of devices contained therein in letters measuring at least 20 mm (0.79 in) in height. No person may offer for transportation or transport the lighter refills or prepare the lighter refills for shipment unless that person has been specifically informed of the requirements of this section.

(i) *Limited quantities.* (1) A limited quantity that conforms to the provisions of paragraph (a)(1), (a)(3), (a)(5), (b) or, except for transportation by aircraft, paragraph (h) of this section is excepted from labeling requirements, unless the material is offered for transportation or transported by aircraft, and the specification packaging requirements of this subchapter when packaged in combination packagings according to this paragraph. Packages must be marked in accordance with § 172.315(a) or (b), as appropriate, or as authorized in paragraph (i)(2) of this section. Unless otherwise specified in paragraph (i)(2) of this section, packages of limited quantities intended for transportation by aircraft must conform to the applicable requirements (*e.g.*, authorized materials, inner packaging quantity limits and closure securement) of § 173.27 of this part. A limited quantity package that conforms to the provisions of this section is not subject to the shipping paper requirements of subpart C of part 172 of this subchapter, unless the material meets the definition of a hazardous substance, hazardous waste, marine pollutant, or is offered for transportation and transported by aircraft or vessel, and is eligible for the exceptions provided in § 173.156 of this part. Outside packagings conforming to this paragraph are not required to be marked "INSIDE CONTAINERS COMPLY WITH PRESCRIBED REGULATIONS." In addition, packages of limited quantities are not subject to subpart F (Placarding) of part 172 of this subchapter. Each package must conform to the packaging requirements of subpart B of this part and may not exceed 30 kg (66 pounds) gross weight.

(2) *Consumer commodities.* Until December 31, 2020, a limited quantity package containing a "consumer commodity" as defined in § 171.8 of this subchapter may be renamed "Consumer commodity" and reclassed as ORM–D or, until December 31, 2012, as ORM–D–AIR material and offered for transportation and transported in accordance with the applicable provisions of this subchapter in effect on October 1, 2010.

(j) *Aerosols and receptacles small, containing gas with a capacity of less than 50 mL.* Aerosols, as defined in § 171.8 of this subchapter, and receptacles, small, containing gas, with a capacity not exceeding 50 mL (1.7 fluid oz.) and with a

ED_001691B_00009240

pressure not exceeding 970 kPa (141 psig) at 55 °C (131 °F), containing no hazardous materials other than a Division 2.2 gas, are not subject to the requirements of this subchapter except that for transport by aircraft, such aerosols and receptacles must be transported as cargo and may not be carried onboard an aircraft by passengers or crewmembers in carry-on baggage, checked baggage, or on their person unless specifically excepted by § 175.10. The pressure limit may be increased to 2,000 kPa (290 psig) at 55 °C (131 °F) provided the aerosols are transported in outer packages that conform to the packaging requirements of Subpart B of this part. This paragraph (j) does not apply to a self-defense spray (e.g., pepper spray).

(k) *Aerosols for recycling or disposal.* Aerosols, as defined in § 171.8 of this subchapter, containing a limited quantity which conforms to the provisions of paragraph (a)(3), (a)(5), (b)(1), (b)(2), or (b)(3) of this section are not subject to the 30 kg (66 pounds) gross weight limitation when transported by motor vehicle for purposes of recycling or disposal under the following conditions:

(1) The strong outer packaging and its contents must not exceed a gross weight of 500 kg (1,100 pounds);

(2) Each aerosol container must be secured with a cap to protect the valve stem or the valve stem must be removed; and

(3) The packaging must be offered for transportation or transported by—

(i) Private or contract motor carrier; or

(ii) Common carrier in a motor vehicle under exclusive use for such service.

(l) For additional exceptions, *see* § 173.307.

[Amdt. 173–94, 41 FR 16079, Apr. 15, 1976]

EDITORIAL NOTE: For FEDERAL REGISTER citations affecting § 173.306, see the List of CFR Sections Affected, which appears in the Finding Aids section of the printed volume and at *www.fdsys.gov*.

§ 173.307 Exceptions for compressed gases.

(a) The following materials are not subject to the requirements of this subchapter:

(1) Carbonated beverages.

(2) Tires when inflated to pressures not greater than their rated inflation pressures. For transportation by air, tires and tire assemblies must meet the conditions in § 175.8(b)(4) of this subchapter.

(3) Balls used for sports.

(4) Refrigerating machines, including dehumidifiers and air conditioners, and components thereof, such as precharged tubing containing:

(i) 12 kg (25 pounds) or less of a nonflammable, non-toxic gas;

(ii) 12 L (3 gallons) or less of ammonia solution (UN2672);

(iii) Except when offered or transported by air, 12 kg (25 pounds) or less of a flammable, non-toxic gas;

(iv) Except when offered or transported by air or vessel, 20 kg (44 pounds) or less of a Group A1 refrigerant specified in ANSI/ASHRAE Standard 15 (IBR, see § 171.7 of this subchapter); or

(v) 100 g (4 ounces) or less of a flammable, non-toxic liquefied gas.

(5) Manufactured articles or apparatuses, other than light bulbs each containing not more than 100 mg (0.0035 ounce) of inert gas and packaged so that the quantity of inert gas per package does not exceed 1 g (0.35 ounce).

(6) Light bulbs (lamps) conforming to the requirements of § 173.11.

(b) [Reserved]

[Amdt. 173–94, 41 FR 16081, Apr. 15, 1976, as amended by Amdt. 173–135, 45 FR 13090, Feb. 28, 1980; 65 FR 50462, Aug. 18, 2000; 68 FR 45038, July 31, 2003; 68 FR 75745, Dec. 31, 2003; 69 FR 76174, Dec. 20, 2004; 71 FR 14604, Mar. 22, 2006; 74 FR 2266, Jan. 14, 2009; 76 FR 3380, Jan. 19, 2011; 80 FR 1162, Jan. 8, 2015]

§ 173.308 Lighters.

(a) *General requirements.* No person may offer for transportation or transport a lighter (see § 171.8 of this subchapter) containing a Division 2.1 (flammable gas) material except under the following conditions:

(1) The lighter must contain a fuel reservoir not exceeding 4 fluid ounces capacity (7.22 cubic inches), and must contain not more than 10 grams (0.35 ounce) of flammable gas.

(2) The maximum filling density may not exceed 85 percent of the volumetric

ED_001691B_00009240

capacity of each fluid reservoir at 15 °C (59 °F).

(3) Each lighter design, including closures, must be capable of withstanding, without leakage or rupture, an internal pressure of at least two times the pressure of the flammable gas at 55 °C (131 °F).

(4) Each appropriate lighter design must be examined and successfully tested by a person or agency (authorized testing agency) who is authorized by the Associate Administrator to perform such examination and testing under the provisions of subpart E of part 107 of this chapter and who—

(i) Has the equipment necessary to perform the testing required to the level of accuracy required;

(ii) Is able to demonstrate, upon request, the knowledge of the testing procedures and requirements of the HMR relative to lighters;

(iii) Does not manufacture or market lighters, is not financially dependent or owned in whole or in part, by any entity that manufactures or markets lighters;

(iv) Is a resident of the United States; and

(v) Performs all examination and testing in accordance with the requirements of paragraph (b)(3) and (4) of this section.

(5) The Associate Administrator will assign an identification code to each person who is authorized to examine and test lighters. This identification code must be incorporated into a unique test report identifier for each successfully tested lighter design.

(b) *Examination and testing of lighter design types*—(1) *Lighter design type definition.* A new lighter design is one that has never been examined and tested or one that differs from a previous design in any manner that may affect the escape (leakage) of gas. Lighter characteristics that may affect the escape of gas include changes in materials of construction, ignition mechanism, burner valve design, wall thickness, sealing materials, and type of fuel (e.g., vapor pressure differences).

(2) *Lighter samples submitted for examination and testing.* Samples of a new lighter design are excepted from the requirements of (a)(4) and (d) of this section and may be offered for transportation and transported under the following conditions:

(i) The samples must be transported only to an authorized testing agency;

(ii) No more than 12 lighters may be packaged in a single outer packaging;

(iii) Inner packagings must conform to the requirements of paragraph (c)(1) of this section. For transportation by aircraft, intermediate or outer packagings must meet the pressure differential requirements of §173.27(c) of this part;

(iv) The outer packaging must conform to the requirements of subpart M of part 178 of this subchapter at the Packing Group I performance level and to the requirements of §173.24 of this subpart;

(v) The word "sample" must appear on the shipping paper as part of the proper shipping name or in association with the basic description; and

(vi) In addition to other required markings and labels, the package must be marked "SAMPLE FOR EXAMINATION AND TESTING."

(vii) All other applicable requirements of this subchapter must be met.

(3) *Examination and testing of sample lighters by an authorized testing agency.* Each sample lighter must be examined for conformance with paragraph (a) of this section by a person authorized by the Associate Administrator. In addition, lighters must be subjected to the following leakage test:

(i) A minimum of six lighters must be examined and tested at one time. Store the lighters in a desiccator for 24 hours. After drying, weigh each lighter on an analytical balance capable of accurately measuring to within 1/10 of a milligram (0.0001 grams).

(ii) After weighing, place the lighters together in an explosion-proof, controlled-temperature laboratory oven capable of maintaining 38 ±1 °C (100 ±2 °F) for 96 continuous hours (4 days). At the end of 96 hours, remove the lighters from the oven and place them in the same desiccator and allow the lighters to cool to ambient temperature.

(iii) After cooling, weigh each lighter and determine the net weight differences for each lighter tested (subtract the mass after oven exposure from the original mass before oven exposure).

ED_001691B_00009240

(iv) Weight losses must be assessed to determine the quantity of gas that leaked from the lighters and from the weight change as a result of absorbed moisture. If the net weight has increased, the test facility must run the required test using six empty lighters in parallel with the six filled lighters. The parallel tests are conducted to determine the weight of moisture absorbed in the plastic in order to determine the weight loss of the lighters from gas leakage.

(v) If the net weight loss for any one of the six lighters exceeds 20 milligrams (0.020 grams), the design must be rejected.

(vi) Lighters manufactured to a rejected lighter design may not be offered for transportation or transported in commerce unless approved in writing by the Associate Administrator.

(4) *Recordkeeping requirements.* (i) Following the examination of each new lighter design, the person or agency that conducted the examination and test must prepare a test report and make that test report available to the manufacturer. At a minimum, the test report must contain the following information:

(A) Name and address of test facility;

(B) Name and address of applicant;

(C) A test report identifier, that is, the authorized person or agency identifier code immediately followed by an alpha/numeric identifier of four or more characters assigned to the specific lighter design by the authorized person or agency (e.g., "LAA****," where, "LAA" is the identification code assigned to the authorized person or agency by the Associate Administrator and "****" is replaced with the unique test report identifier assigned to the specific lighter design by the authorized person or agency);

(D) Manufacturer of the lighter. For a foreign manufacturer, the U.S. agent or importer must be identified;

(E) Description of the lighter design type (e.g., model, dimensions, ignition mechanism, reservoir capacity, lot/batch number) in sufficient detail to ensure conformance with paragraph (b)(4)(iii) of this section; and

(F) A certification by the authorized testing agency that the lighter design conforms to paragraph (a) of this section and passes or does not pass the required leakage test in paragraph (b) of this section.

(ii) For as long as any lighter design is in production and for at least three years thereafter, a copy of each lighter's test report must be maintained by the authorized testing agency that performed the examination and testing and the manufacturer of the design. For a foreign manufacturer, each test report must be maintained in accordance with this paragraph by the foreign manufacturer's U.S. agent or importer.

(iii) Test reports must be traceable to a specific lighter design and must be made available to a representative of the Department upon request.

(5) *Transitional provisions.* Until January 1, 2012, approval numbers issued by the Associate Administrator prior to January 1, 2007 may continue to be marked on packages and annotated on shipping papers, where applicable. After that time, previously issued approvals (*i.e.*, T-***) will no longer be valid and each lighter design currently in production must be re-examined and tested under the provisions of this section.

(c) *Packaging requirements*—(1) *Inner containment.* Lighters must be placed in an inner packaging that is designed to prevent movement of the lighters and inadvertent ignition or leakage. The ignition device and gas control lever of each lighter must be designed, or securely sealed, taped, or otherwise fastened or packaged to protect against accidental functioning or leakage of the contents during transport. If lighters are packed vertically in a plastic tray, a plastic, fiberboard or paperboard partition must be used to prevent friction between the ignition device and the inner packaging.

(2) *Outer packaging.* Lighters and their inner packagings must be tightly packed and secured against movement in any rigid specification outer packaging authorized in subpart L of part 178 of this subchapter at the Packing Group II performance level.

(d) *Shipping paper and marking requirements.* (1) In addition to the requirements of subpart C of part 172, shipping papers must be annotated with the lighter design test report identifier (see paragraph (b)(4)(i)(C) of

ED_001691B_00009240

this section) traceable to the test report assigned to the lighters or, if applicable, the previously issued approval number (*i.e.*, T***), in association with the basic description.

(2) In addition to the requirements of subpart D of part 172, a lighter design test report identifier (see paragraph (b)(4)(i)(C) of this section) or, if applicable, the previously issued approval number (*i.e.*, T***), must be marked on a package containing lighters.

(3) For transportation by vessel in a closed transport vehicle or a closed freight container, the following warning must be affixed to the access doors:

WARNING—MAY CONTAIN EXPLOSIVE MIXTURES WITH AIR—KEEP IGNITION SOURCES AWAY WHEN OPENING

The warning must be on a contrasting background and must be in letters measuring at least 12.7 mm (0.5 inch) in height.

(e) *Exceptions*—(1) *Common or contract carriage.* For highway transportation by common or contract carrier, when no more than 1,500 lighters covered by this section are transported in one motor vehicle, the requirements of subparts C through H of part 172, and part 177 of this subchapter do not apply. Lighters transported in accordance with this paragraph are also excepted from the specification packaging, shipping paper, and marking requirements specified in §173.308(c) and (d). Inner packagings must conform to paragraph (c)(1) of this section. Lighters must be further packaged in rigid, strong outer packagings meeting the general packaging requirements of subpart B of part 173. Outer packagings must be plainly and durably marked, on two opposing sides or ends, with the word "LIGHTERS" and the number of devices contained therein in letters measuring at least 20 mm (0.79 in) in height. In addition, the package must include the test report identifier for each lighter design as specified in paragraph (b)(4)(i)(C) of this section or, if applicable, the previously issued approval number (*i.e.*, T***). The test report identifier or approval number must be durable, legible, in English, and located in, attached to, or marked directly on the package. No person may offer for transportation or transport the lighters or prepare the lighters for shipment unless that person has been specifically informed of the requirements of this section.

(2) *Private carriage.* For highway transportation by a private carrier, lighters that have been examined and successfully tested in accordance with this section are not subject to any other requirements of this subchapter under the following conditions:

(i) No person may offer for transportation or transport the lighters or prepare the lighters for shipment unless that person has been specifically informed of the requirements of this section;

(ii) Lighters must be placed in an inner packaging that is designed to prevent accidental activation of the ignition device or valve, release of gas, and movement of the lighters (*e.g.*, tray, blister pack, etc.);

(iii) Inner packagings must be placed in a securely closed rigid outer packaging that limits movement of the inner packagings and protects them from damage;

(iv) The outer package may contain not more than 300 lighters;

(v) A transport vehicle may carry not more than 1,500 lighters at any one time;

(vi) The lighters may not be placed in an outer packaging with other hazardous materials; and

(vii) Outer packagings must be plainly and durably marked with the words "LIGHTERS, excepted quantity."

[71 FR 3427, Jan. 23, 2006, as amended at 73 FR 57006, Oct. 1, 2008]

§ 173.309 Fire extinguishers.

This section applies to portable fire extinguishers for manual handling and operation, fire extinguishers for installation in aircraft, and large fire extinguishers. *Large fire extinguishers* include fire extinguishers mounted on wheels for manual handling; fire extinguishing equipment or machinery mounted on wheels or wheeled platforms or units transported similar to (small) trailers; and fire extinguishers composed of a non-rollable pressure drum and equipment, and handled, for example, by fork lift or crane when loaded or unloaded.

ED_001691B_00009240

(a) Specification 3A, 3AA, 3E, 3AL, 4B, 4BA, 4B240ET or 4BW (§§178.36, 178.37, 178.42, 178.46, 178.50, 178.51, 178.55 and 178.61 of this subchapter) cylinders are authorized for manufacture and use as fire extinguishers under the following conditions:

(1) Extinguishing agents must be nonflammable, non-poisonous, non-corrosive, and commercially free from corroding components;

(2) Each fire extinguisher must be charged with a nonflammable, non-poisonous, dry gas that has a dew-point at or below minus 46.7 °C (minus 52 °F) at 101 kPa (1 atmosphere) and is free of corroding components, to not more than the service pressure of the cylinder;

(3) A fire extinguisher may not contain more than 30% carbon dioxide by volume or any other corrosive extinguishing agent; and

(4) Each fire extinguisher must be protected externally by suitable corrosion-resisting coating.

(5) Specification 3E and 4BA cylinders must be packed in strong non-bulk outer packagings. The outside of the combination packaging must be marked with an indication that the inner packagings conform to the prescribed specifications.

(b) Specification 2P or 2Q (§§178.33 and 178.33a of this subchapter) inner non-refillable metal packagings are authorized as fire extinguishers subject to the following conditions:

(1) Extinguishing agents must be nonflammable, non-poisonous, and non-corrosive as defined in this subchapter;

(2) The liquid portion of the gas plus any additional liquid or solid may not completely fill the packaging at 55 °C (130 °F);

(3) Pressure in the packaging must not exceed 1250 kPa (181 psig) at 55 °C (130 °F). If the pressure exceeds 920 kPa (141 psig) at 55 °C (130 °F), but does not exceed 1100 kPa (160 psig) at 55 °C (130 °F), a specification DOT 2P inner metal packaging must be used; if the pressure exceeds 1100 kPa (160 psig) at 55 °C (130 °F), a specification DOT 2Q inner metal packaging must be used. The metal packaging must be capable of withstanding, without bursting, a pressure of one and one-half times the equilibrium pressure of the contents at 55 °C (130 °F);

(4) Each completed inner packaging filled for shipment must have been heated until the pressure in the container is equivalent to the equilibrium pressure of the contents at 55 °C (130 °F) without evidence of leakage, distortion, or other defect; and

(5) Specification 2P and 2Q cylinders must be packed in strong non-bulk outer packagings. The outside of the combination packaging must be marked with an indication that the inner packagings conform to the prescribed specifications.

(c) Non-specification cylinders are authorized as fire extinguishers subject to the following conditions:

(1) Extinguishing agents must be nonflammable, non-poisonous, and non-corrosive as defined in this subchapter;

(2) The internal volume of each cylinder may not exceed 18 L (1,100 cubic inches). For fire extinguishers not exceeding 900 mL (55 cubic inches) capacity, the liquid portion of the gas plus any additional liquid or solid must not completely fill the container at 55 °C (130 °F). Fire extinguishers exceeding 900 mL (55 cubic inches) capacity may not contain any liquefied compressed gas;

(3) Each fire extinguisher manufactured on and after January 1, 1976, must be designed and fabricated with a burst pressure of not less than six times its charged pressure at 21 °C (70 °F) when shipped;

(4) Each fire extinguisher must be tested, without evidence of failure or damage, to at least three times its charged pressure at 21 °C (70 °F) but not less than 825 kPa (120 psig) before initial shipment, and must be marked to indicate the year of the test (within 90 days of the actual date of the original test) and with the words "MEETS DOT REQUIREMENTS." This marking is considered a certification that the fire extinguisher is manufactured in accordance with the requirements of this section. The words "This extinguisher meets all requirements of 49 CFR 173.306" may be displayed on fire extinguishers manufactured prior to January 1, 1976;

(5) Each non-specification fire extinguisher must be packaged as an inner

ED_001691B_00009240

packaging within a combination outer packaging. Examples of acceptable outer packagings for non-specification fire extinguishers include large cartons, racks, cages or other suitable enclosures; and

(6) For any subsequent shipment, each fire extinguisher must be in compliance with the retest requirements of the Occupational Safety and Health Administration Regulations of the Department of Labor, 29 CFR 1910.157.

(d) Limited quantities: Fire extinguishers otherwise conforming to paragraph (a), (b), or (c) of this section and are charged with a limited quantity of compressed gas to not more than 1660 kPa (241 psig) at 21 °C (70 °F) are excepted from shipping papers (except when offered for transportation by aircraft or vessel), labeling (except when offered for transportation by aircraft), placarding, the specification packaging requirements of this subchapter, and are eligible for the exceptions provided in § 173.156 when offered for transportation in accordance with this paragraph (d). Limited quantity shipments conforming to this paragraph are not subject to parts 174 and 177 of this subchapter when transported by highway or rail. In addition, limited quantity packages of fire extinguishers are subject to the following conditions, as applicable:

(1) Extinguishing agents must be nonflammable, non-poisonous, and noncorrosive as defined in this subchapter; and

(2) Packages must be marked as specified for limited quantities in § 172.315 of this subchapter.

(e) Large fire extinguishers may be transported while unpackaged under the following conditions:

(1) The requirements of § 173.24(b) are met;

(2) The valves are protected in accordance with § 173.301(c)(2)(i), (ii), (iii) or (v); and

(3) Other equipment mounted on the fire extinguisher is protected to prevent accidental activation.

[78 FR 1116, Jan. 7, 2013, as amended at 80 FR 1162, Jan. 8, 2015]

§ 173.310 Exceptions for radiation detectors.

Radiation detectors, radiation sensors, electron tube devices, or ionization chambers, herein referred to as "radiation detectors," that contain only Division 2.2 gases, are excepted from the specification packaging in this subchapter and, except when transported by air, from labeling and placarding requirements of this subchapter when designed, packaged, and transported as follows:

(a) Radiation detectors must be single-trip, hermetically sealed, welded metal inside containers that will not fragment upon impact.

(b) Radiation detectors must not have a design pressure exceeding 4.83 MPa (700 psig) and a capacity exceeding 355 fluid ounces (641 cubic inches). They must be designed and fabricated with a burst pressure of not less than three times the design pressure if the radiation detector is equipped with a pressure relief device, and not less than four times the design pressure if the detector is not equipped with a pressure relief device.

(c) Radiation detectors must be shipped in a strong outer packaging capable of withstanding a drop test of at least 1.2 meters (4 feet) without breakage of the radiation detector or rupture of the outer packaging. If the radiation detector is shipped as part of other equipment, the equipment must be packaged in strong outer packaging or the equipment itself must provide an equivalent level of protection.

(d) Emergency response information accompanying each shipment and available from each emergency response telephone number for radiation detectors must identify those receptacles that are not fitted with a pressure relief device and provide appropriate guidance for exposure to fire.

[75 FR 27215, May 14, 2010]

§ 173.311 Metal hydride storage systems.

The following packing instruction is applicable to transportable UN Metal hydride storage systems (UN3468) with pressure receptacles not exceeding 150 liters (40 gallons) in water capacity and having a maximum developed pressure

ED_001691B_00009240

not exceeding 25 MPa. Metal hydride storage systems must be designed, constructed, initially inspected and tested in accordance with ISO 16111 (IBR, see § 171.7 of this subchapter) as authorized under § 178.71(m) of this subchapter. Steel pressure receptacles or composite pressure receptacles with steel liners must be marked in accordance with § 173.301b(f) of this part which specifies that a steel UN pressure receptacle bearing an "H" mark must be used for hydrogen bearing gases or other gases that may cause hydrogen embrittlement. Requalification intervals must be no more than every five years as specified in § 180.207 of this subchapter in accordance with the requalification procedures prescribed in ISO 16111.

[76 FR 3381, Jan. 19, 2011, as amended at 76 FR 82178, Dec. 30, 2011]

§ 173.312 Requirements for shipment of MEGCs.

(a) *General requirements.* (1) Unless otherwise specified, a MEGC is authorized for the shipment of liquefied and non-liquefied compressed gases. Each pressure receptacle contained in a MEGC must meet the requirements in §§ 173.301, 173.301b, 173.302b and 173.304b, as applicable.

(2) The MEGC must conform to the design, construction, inspection and testing requirements prescribed in § 178.75 of this subchapter.

(3) No person may offer or accept a hazardous material for transportation in a MEGC that is damaged to such an extent that the integrity of the pressure receptacles or the MEGC's structural or service equipment may be affected.

(4) No person may fill or offer for transportation a pressure receptacle in a MEGC if the pressure receptacle or the MEGC is due for periodic requalification, as prescribed in subpart C to part 180 of this subchapter. However, this restriction does not preclude transportation of pressure receptacles filled and offered for transportation prior to the requalification due date.

(5) Prior to filling and offering a MEGC for transportation, the MEGC's structural and service equipment must be visually inspected. Any unsafe condition must be corrected before the MEGC is offered for transportation. All required markings must be legible.

(6) Except for Division 2.2 permanent gases, each pressure receptacle must be equipped with an individual shutoff valve that must be tightly closed while in transit. For Division 2.1, Division 2.2 liquefied gases and 2.3 gases, the manifold must be designed so that each pressure receptacle can be filled separately and be kept isolated by a valve capable of being closed during transit. For Division 2.1 gases, the pressure receptacles must be isolated by a valve into assemblies of not more than 3,000 L.

(b) *Filling.* (1) A MEGC may not be filled to a pressure greater than the lowest marked working pressure of any pressure receptacle. A MEGC may not be filled above its marked maximum permissible gross mass.

(2) After each filling, the shipper must verify the leakproofness of the closures and equipment. Each fill opening must be closed by a cap or plug.

(c) *Damage protection.* During transportation, a MEGC must be protected against damage to the pressure receptacles and service equipment resulting from lateral and longitudinal impact and overturning as prescribed in § 178.75 of this subchapter.

[71 FR 33884, June 12, 2006]

§ 173.313 UN Portable Tank Table for Liquefied Compressed Gases and Chemical Under Pressure.

The UN Portable Tank Table for Liquefied Compressed Gases and chemical under pressure is referenced in § 172.102(c)(7)(iii) of this subchapter for portable tanks that are used to transport liquefied compressed gases and chemicals under pressure. The table applies to each liquefied compressed gas and chemical under pressure that are identified with Special Provision T50 in Column (7) of the § 172.101 Hazardous Materials Table. In addition to providing the UN identification number and proper shipping name, the table provides maximum allowable working pressures, bottom opening requirements, pressure relief device requirements, and degree of filling requirements for liquefied compressed gas and chemical under pressure permitted for transportation in a T50 portable tank.

ED_001691B_00009240

In the minimum test pressure column, ''small'' means a portable tank with a diameter of 1.5 meters or less when measured at the widest part of the shell, ''sunshield'' means a portable tank with a shield covering at least the upper third of the shell, ''bare'' means no sunshield or insulation is provided, and ''insulated'' means a complete cladding of sufficient thickness of insulating material necessary to provide a minimum conductance of not more than 0.67 w/m²/k. In the pressure relief requirements column, the word ''Normal'' denotes that a frangible disc as specified in §178.276(e)(3) of this subchapter is not required.

UN PORTABLE TANK TABLE FOR LIQUEFIED COMPRESSED GASES AND CHEMICALS UNDER PRESSURE

UN No.	Non-refrigerated liquefied compressed gases	Minimum design pressure (bar) small; bare; sunshield; insulated	Openings below liquid level	Pressure relief requirements (*See* § 178.276(e))	Maximum filling density (kg/l)
1005	Ammonia, anhydrous	29.0 25.7 22.0 19.7	Allowed	§ 178.276(e)(3)	0.53
1009	Bromotrifluoromethane or Refrigerant gas R 13B1.	38.0 34.0 30.0 27.5	Allowed	Normal	1.13
1010	Butadienes, stabilized	7.5 7.0 7.0 7.0	Allowed	Normal	0.55
1011	Butane	7.0 7.0 7.0 7.0	Allowed	Normal	0.51
1012	Butylene	8.0 7.0 7.0 7.0	Allowed	Normal	0.53
1017	Chlorine	19.0 17.0 15.0 13.5	Not Allowed	§ 178.276(e)(3)	1.25
1018	Chlorodifluoromethane or Refrigerant gas R 22.	26.0 24.0 21.0 19.0	Allowed	Normal	1.03
1020	Chloropentafluoroethane or Refrigerant gas R 115.	23.0 20.0 18.0 16.0	Allowed	Normal	1.06
1021	1-Chloro-1,2,2,2-tetrafluoroethane or Refrigerant gas R 124.	10.3 9.8 7.9 7.0	Allowed	Normal	1.2
1027	Cyclopropane	18.0 16.0 14.5 13.0	Allowed	Normal	0.53
1028	Dichlorodifluoromethane or Refrigerant gas R 12.	16.0 15.0 13.0 11.5	Allowed	Normal	1.15
1029	Dichlorofluoromethane or Refrigerant gas R 21.	7.0 7.0 7.0 7.0	Allowed	Normal	1.23
1030	1,1-Difluoroethane or Refrigerant gas R 152a.	16.0	Allowed	Normal	0.79

ED_001691B_00009240

UN PORTABLE TANK TABLE FOR LIQUEFIED COMPRESSED GASES AND CHEMICALS UNDER PRESSURE—Continued

UN No.	Non-refrigerated liquefied compressed gases	Minimum design pressure (bar) small; bare; sunshield; insulated	Openings below liquid level	Pressure relief requirements (*See* § 178.276(e))	Maximum filling density (kg/l)
		14.0			
		12.4			
		11.0			
1032	Dimethylamine, anhydrous	7.0	Allowed	Normal	0.59
		7.0			
		7.0			
		7.0			
1033	Dimethyl ether	15.5	Allowed	Normal	0.58
		13.8			
		12.0			
		10.6			
1036	Ethylamine	7.0	Allowed	Normal	0.61
		7.0			
		7.0			
		7.0			
1037	Ethyl chloride	7.0	Allowed	Normal	0.8
		7.0			
		7.0			
		7.0			
1040	Ethylene oxide with nitrogen up to a total pressure of 1MPa (10 bar) at 50 °C.	Only authorized in 10 bar insulated portable tanks—	Not Allowed	§ 178.276(e)(3)	0.78
1041	Ethylene oxide and carbon dioxide mixture with more than 9% but not more than 87% ethylene oxide.	See MAWP definition in § 178.276(a)	Allowed	Normal	*See* § 173.32(f)
1055	Isobutylene	8.1	Allowed	Normal	0.52
		7.0			
		7.0			
		7.0			
1060	Methyl acetylene and propadiene mixture, stabilized.	28.0	Allowed	Normal	0.43
		24.5			
		22.0			
		20.0			
1061	Methylamine, anhydrous	10.8	Allowed	Normal	0.58
		9.6			
		7.8			
		7.0			
1062	Methyl bromide	7.0	Not Allowed	§ 178.276(e)(3)	1.51
		7.0			
		7.0			
		7.0			
1063	Methyl chloride *or* Refrigerant gas R 40	14.5	Allowed	Normal	0.81
		12.7			
		11.3			
		10.0			
1064	Methyl mercaptan	7.0	Not Allowed	§ 178.276(e)(3)	0.78
		7.0			
		7.0			
		7.0			
1067	Dinitrogen tetroxide	7.0	Not Allowed	§ 178.276(e)(3)	1.3
		7.0			
		7.0			
		7.0			
1075	Petroleum gas, liquefied	See MAWP definition in § 178.276(a)	Allowed	Normal	See § 173.32(f)
1077	Propylene	28.0	Allowed	Normal	0.43
		24.5			
		22.0			
		20.0			
1078	Refrigerant gas, n.o.s.	See MAWP definition in § 178.276(a)	Allowed	Normal	See § 173.32(f)
1079	Sulphur dioxide	11.6	Not Allowed	§ 178.276(e)(3)	1.23
		10.3			

ED_001691B_00009240

UN PORTABLE TANK TABLE FOR LIQUEFIED COMPRESSED GASES AND CHEMICALS UNDER PRESSURE—Continued

UN No.	Non-refrigerated liquefied compressed gases	Minimum design pressure (bar) small; bare; sunshield; insulated	Openings below liquid level	Pressure relief requirements (*See* § 178.276(e))	Maximum filling density (kg/l)
		8.5 7.6			
1082	Trifluorochloroethylene, stabilized *or* Refrigerant gas R 1113.	17.0 15.0 13.1 11.6	Not Allowed	§ 178.276(e)(3)	1.13
1083	Trimethylamine, anhydrous	7.0 7.0 7.0 7.0	Allowed	Normal	0.56
1085	Vinyl bromide, stabilized	7.0 7.0 7.0 7.0	Allowed	Normal	1.37
1086	Vinyl chloride, stabilized	10.6 9.3 8.0 7.0	Allowed	Normal	0.81
1087	Vinyl methyl ether, stabilized	7.0 7.0 7.0 7.0	Allowed	Normal	0.67
1581	Chloropicrin and methyl bromide mixture.	7.0 7.0 7.0 7.0	Not Allowed	§ 178.276(e)(3)	1.51
1582	Chloropicrin and methyl chloride mixture.	19.2 16.9 15.1 13.1	Not Allowed	§ 178.276(e)(3)	0.81
1858	Hexafluoropropylene compressed *or* Refrigerant gas R 1216.	19.2 16.9 15.1 13.1	Allowed	Normal	1.11
1912	Methyl chloride and methylene chloride mixture.	15.2 13.0 11.6 10.1	Allowed	Normal	0.081
NA, 1954	Insecticide gases, *flammable*, n.o.s.	See MAWP definition in § 178.276(a)	Allowed	Normal	§ 173.32(f)
1958	1,2-Dichloro-1,1,2,2-tetrafluoroethane or Refrigerant gas R 114.	7.0 7.0 7.0 7.0	Allowed	Normal	1.3
1965	Hydrocarbon gas, mixture liquefied, n.o.s..	See MAWP definition in 178.276(a)	Allowed	Normal	See § 173.32(f)
1969	Isobutane	8.5 7.5 7.0 7.0	Allowed	Normal	0.49
1973	Chlorodifluoromethane and chloropentafluoroethane mixture with fixed boiling point, with approximately 49% chlorodifluoromethane or Refrigerant gas R 502.	28.3 25.3 22.8 20.3	Allowed	Normal	1.05
1974	Chlorodifluorobromomethane *or* Refrigerant gas R 12B1.	7.4	Allowed	Normal	1.61

ED_001691B_00009240

UN PORTABLE TANK TABLE FOR LIQUEFIED COMPRESSED GASES AND CHEMICALS UNDER PRESSURE—Continued

UN No.	Non-refrigerated liquefied compressed gases	Minimum design pressure (bar) small; bare; sunshield; insulated	Openings below liquid level	Pressure relief requirements (*See* § 178.276(e))	Maximum filling density (kg/l)
		7.0			
		7.0			
		7.0			
1976	Octafluorocyclobutane *or* Refrigerant gas RC 318.	8.8	Allowed	Normal	1.34
		7.8			
		7.0			
		7.0			
1978	Propane	22.5	Allowed	Normal	0.42
		20.4			
		18.0			
		16.5			
1983	1-Chloro-2,2,2-trifluoroethane or Refrigerant gas R 133a.	7.0	Allowed	Normal	1.18
		7.0			
		7.0			
		7.0			
2035	1,1,1-Trifluoroethane compressed or Refrigerant gas R 143a.	31.0	Allowed	Normal	0.76
		27.5			
		24.2			
		21.8			
2424	Octafluoropropane or Refrigerant gas R 218.	23.1	Allowed	Normal	1.07
		20.8			
		18.6			
		16.6			
2517	1-Chloro-1,1-difluoroethane or Refrigerant gas R 142b.	8.9	Allowed	Normal	0.99
		7.8			
		7.0			
		7.0			
2602	Dichlorodifluoromethane and difluoroethane azeotropic mixture with approximately 74% dichlorodifluoromethane or Refrigerant gas R 500.	20.0	Allowed	Normal	1.01
		18.0			
		16.0			
		14.5			
3057	Trifluoroacetyl chloride	14.6	Not allowed	§ 178.276(e)(3)	1.17
		12.9			
		11.3			
		9.9			
3070	Ethylene oxide and dichlorodifluoromethane mixture with not more than 12.5% ethylene oxide.	14.0	Allowed	§ 178.276(e)(3)	1.09
		12.0			
		11.0			
		9.0			
3153	Perfluoro (methyl vinyl ether)	14.3	Allowed	Normal	1.14
		13.4			
		11.2			
		10.2			
3159	1,1,1,2-Tetrafluoroethane or Refrigerant gas R 134a.	17.7	Allowed	Normal	1.04
		15.7			
		13.8			
		12.1			
3161	Liquefied gas, flammable, n.o.s.	See MAWP definition in § 178.276(a)	Allowed	Normal	§ 173.32(f)
3163	Liquefied gas, n.o.s.	See MAWP definition in § 178.276(a)	Allowed	Normal	§ 173.32(f)
3220	Pentafluoroethane or Refrigerant gas R 125.	34.4			
	30.8				

ED_001691B_00009240

UN PORTABLE TANK TABLE FOR LIQUEFIED COMPRESSED GASES AND CHEMICALS UNDER PRESSURE—Continued

UN No.	Non-refrigerated liquefied compressed gases	Minimum design pressure (bar) small; bare; sunshield; insulated	Openings below liquid level	Pressure relief requirements (*See* § 178.276(e))	Maximum filling density (kg/l)
		27.5			
		24.5	Allowed	Normal	0.87
3252	Difluoromethane or Refrigerant gas R 32.	43.0	Allowed	Normal	0.78
		39.0			
		34.4			
		30.5			
3296	Heptafluoropropane or Refrigerant gas R 227.	16.0	Allowed	Normal	1.2
		14.0			
		12.5			
		11.0			
3297	Ethylene oxide and chlorotetrafluoroethane mixture, with not more than 8.8% ethylene oxide.	8.1	Allowed	Normal	1.16
		7.0			
		7.0			
		7.0			
3298	Ethylene oxide and pentafluoroethane mixture, with not more than 7.9% ethylene oxide.	25.9	Allowed	Normal	1.02
		23.4			
		20.9			
		18.6			
3299	Ethylene oxide and tetrafluoroethane mixture, with not more than 5.6% ethylene oxide.	16.7	Allowed	Normal	1.03
		14.7			
		12.9			
		11.2			
3318	Ammonia solution, relative density less than 0.880 at 15 °C in water, with more than 50% ammonia.	See MAWP definition in § 178.276(a)	Allowed	§ 178.276(e)(3)	§ 173.32(f)
3337	Refrigerant gas R 404A	31.6	Allowed	Normal	0.84
		28.3			
		25.3			
		22.5			
3338	Refrigerant gas R 407A	31.3	Allowed	Normal	0.95
		28.1			
		25.1			
		22.4			
3339	Refrigerant gas R 407B	33.0	Allowed	Normal	0.95
		29.6			
		26.5			
		23.6			
3340	Refrigerant gas R 407C	29.9	Allowed	Normal	0.95
		26.8			
		23.9			
		21.3			
3500	Chemical under pressure, n.o.s	See MAWP definition in § 178.276(a)	Allowed	§ 178.276(e)(3)	See TP4 in § 172.102(c)
3501	Chemical under pressure, flammable, n.o.s.	See MAWP definition in § 178.276(a)	Allowed	§ 178.276(e)(3)	See TP4 in § 172.102(c)
3502	Chemical under pressure, toxic, n.o.s ...	See MAWP definition in § 178.276(a)	Allowed	§ 178.276(e)(3)	See TP4 in § 172.102(c)
3503	Chemical under pressure, corrosive, n.o.s.	See MAWP definition in § 178.276(a)	Allowed	§ 178.276(e)(3)	See TP4 in § 172.102(c)
3504	Chemical under pressure, flammable, toxic, n.o.s.	See MAWP definition in § 178.276(a)	Allowed	§ 178.276(e)(3)	See TP4 in § 172.102(c)
3505	Chemical under pressure, flammable, corrosive, n.o.s.	See MAWP definition in § 178.276(a)	Allowed	§ 178.276(e)(3)	See TP4 in § 172.102(c)

ED_001691B_00009240

[69 FR 76174, Dec. 20, 2004, as amended at 70 FR 34399, June 14, 2005; 78 FR 1091, Jan. 7, 2013]

§ 173.314 Compressed gases in tank cars and multi-unit tank cars.

(a) *Definitions.* For definitions of compressed gases, see § 173.115.

(b) *General requirements.* (1) Tank car tanks containing compressed gases must not be shipped unless they were loaded by or with the consent of the owner thereof.

(2) Tank car tanks must not contain gases capable of combining chemically and must not be loaded with any gas which combines chemically with the gas previously loaded therein, until all residue has been removed and interior of tank thoroughly cleaned.

(3) For tanks of the DOT-106A and 110A class, the tanks must be placed in position and attached to car structure by the shipper.

(4) Wherever the word ''approved'' is used in this part of the regulations, it means approval by the Association of American Railroads Committee on Tank Cars as prescribed in § 179.3 of this subchapter.

(5) Each tank car used for the transportation of anhydrous ammonia or any material that meets the criteria of Division 2.1 or 2.3 must have gaskets for manway cover plates and for mounting of fittings designed (for temperature, application, media, pressure, and size) to create a positive seal so that, under conditions normally incident to transportation, there will not be an identifiable release of the material to the environment. The use of sealants to install gaskets is prohibited.

(c) *Authorized gases, filling limits for tank cars.* A compressed gas in a tank car or a multi-unit tank car must be offered for transportation in accordance with § 173.31 and this section. The gases listed below must be loaded and offered for transportation in accordance with the following table:

Proper shipping name	Outage and filling limits (see note 1)	Authorized tank car class (see note 11)	Authorized tank car specification (see note 12)
Ammonia, anhydrous, or ammonia solutions >50 percent ammonia.	Notes 2, 10	105, 112, 114, 120	105J500I, 112J500I
	Note 3	106.	
Ammonia solutions with >35 percent, but ≤50 percent ammonia by mass.	Note 3	105, 109, 112, 114, 120.	
Argon, compressed	Note 4	107.	
Boron trichloride	Note 3	105, 106.	
Carbon dioxide, refrigerated liquid	Note 5	105.	
Chlorine	Note 6	105	105J600I
	125	106.	
Chlorine trifluoride	Note 3	106, 110.	
Chlorine pentafluoride	Note 3	106, 110.	
Dimethyl ether	Note 3	105, 106, 110, 112, 114, 120.	
Dimethylamine, anhydrous	Note 3	105, 106, 112.	
Dinitrogen tetroxide, inhibited	Note 3	105, 106, 112	105J500I
Division 2.1 materials not specifically identified in this table.	Notes 9, 10	105, 106, 110, 112, 114, 120.	
Division 2.2 materials not specifically identified in this table.	Note 3	105, 106, 109, 110, 112, 114, 120.	
Division 2.3 Zone A materials not specifically identified in this table.	None	See § 173.245.	105J600I
Division 2.3 Zone B materials not specifically identified in this table.	Note 3	105, 106, 110, 112, 114, 120.	105J600I
Division 2.3 Zone C materials not specifically identified in this table.	Note 3	105, 106, 110, 112, 114, 120.	105J500I
Division 2.3 Zone D materials not specifically identified in this table.	Note 3	105, 106, 109, 110, 112, 114, 120.	105J500I, 112J500I
Ethylamine	Note 3	105, 106, 110, 112, 114, 120.	
Helium, compressed	Note 4	107.	
Hydrogen	Note 4	107.	
Hydrogen chloride, refrigerated liquid	Note 7	105	105J600I, 112S600I
Hydrogen sulfide	Note 3	105, 106, 110, 112, 114, 120.	105J600I
Hydrogen sulfide, liquefied	68	106.	
Methyl bromide	Note 3	105, 106	105J500I
Methyl chloride	Note 3	105, 106, 112.	

ED_001691B_00009240

Proper shipping name	Outage and filling limits (see note 1)	Authorized tank car class (see note 11)	Authorized tank car specification (see note 12)
Methyl mercaptan	Note 3	105, 106	105J500I
Methylamine, anhydrous	Note 3	105, 106, 112.	
Nitrogen, compressed	Note 4	107.	
Nitrosyl chloride	124	105	105J500I
	110	106.	
Nitrous oxide, refrigerated liquid	Note 5	105.	
Oxygen, compressed	Note 4	107.	
Phosgene	Note 3	106.	
Sulfur dioxide, liquefied	125	105, 106, 110	105J500I
Sulfuryl fluoride	120	105.	
Vinyl fluoride, stabilized	Note 8	105.	

NOTES: 1. The percent filling density for liquefied gases is hereby defined as the percent ratio of the mass of gas in the tank to the mass of water that the tank will hold. For determining the water capacity of the tank in kilograms, the mass of 1 L of water at 15.5 °C in air is 1 kg. (the mass of one gallon of water at 60 °F in air is 8.32828 pounds).

2. The liquefied gas must be loaded so that the outage is at least two percent of the total capacity of the tank at the reference temperature of 46 °C (115 °F) for a noninsulated tank; 43 °C (110 °F) for a tank having a thermal protection system incorporating a metal jacket that provides an overall thermal conductance at 15.5 °C (60 °F) of no more than 10.22 kilojoules per hour per square meter per degree Celsius (0.5 Btu per hour/per square foot/per degree F) temperature differential; and 41 °C (105 °F) for an insulated tank having an insulation system incorporating a metal jacket that provides an overall thermal conductance at 15.5 °C (60 °F) of no more than 1.5333 kilojoules per hour per square meter per degree Celsius (0.075 Btu per hour/per square foot/per degree F) temperature differential.

3. The requirements of § 173.24b(a) apply.

4. The gas pressure at 54.44 °C (130 °F.) in any non-insulated tank car may not exceed 7/10 of the marked test pressure, except that a tank may be charged with helium to a pressure 10 percent in excess of the marked maximum gas pressure at 54.44 °C (130 °F.) of each tank.

5. The liquid portion of the gas at -17.77 °C (0 °F.) must not completely fill the tank.

6. The maximum permitted filling density is 125 percent. The quantity of chlorine loaded into a single unit-tank car may not be loaded in excess of the normal lading weights nor in excess of 81.65 Mg (90 tons).

7. 89 percent maximum to 80.1 percent minimum at a test pressure of 6.2 Bar (90 psig).

8. 59.6 percent maximum to 53.6 percent minimum at a test pressure of 7.2 Bar (105 psig).

9. For a liquefied petroleum gas, the liquefied gas must be loaded so that the outage is at least one percent of the total capacity of the tank at the reference temperature of 46 °C (115 °F) for a noninsulated tank; 43 °C (110 °F) for a tank having a thermal protection system incorporating a metal jacket that provides an overall thermal conductance at 15.5 °C (60 °F) of no more than 10.22 kilojoules per hour per square meter per degree Celsius (0.5 Btu per hour/per square foot/per degree F) temperature differential; and 41 °C (105 °F) for an insulated tank having an insulation system incorporating a metal jacket that provides an overall thermal conductance at 15.5 °C (60 °F) of no more than 1.5333 kilojoules per hour per square meter per degree Celsius (0.075 Btu per hour/per square foot/per degree F) temperature differential.

10. For liquefied petroleum gas and anhydrous ammonia, during the months of November through March (winter), the following reference temperatures may be used: 38 °C (100 °F) for a noninsulated tank; 32 °C (90 °F) for a tank having a thermal protection system incorporating a metal jacket that provides an overall thermal conductance at 15.5 °C (60 °F) of no more than 10.22 kilojoules per hour per square meter per degree Celsius (0.5 Btu per hour/per square foot/per degree F) temperature differential; and 29 °C (85 °F) for an insulated tank having an insulation system incorporating a metal jacket and insulation that provides an overall thermal conductance at 15.5 °C (60 °F) of no more than 1.5333 kilojoules per hour per square meter per degree Celsius (0.075 Btu per hour/per square foot/per degree F) temperature differential. The winter reference temperatures may only be used for a tank car shipped directly to a consumer for unloading and not stored in transit. The offeror of the tank must inform each customer that the tank car was filled based on winter reference temperatures. The tank must be unloaded as soon as possible after March in order to retain the specified outage and to prevent a release of hazardous material which might occur due to the tank car becoming liquid full at higher temperatures.

11. For materials poisonous by inhalation, the single unit tank car tanks authorized are only those cars approved by the Tank Car Committee for transportation of the specified material and built prior to March 16, 2009.

12. Except as provided by paragraph (d) of this section, for materials poisonous by inhalation, fusion-welded tank car tanks built on or after March 16, 2009 used for the transportation of the PIH materials noted, must meet the applicable authorized tank car specification and must be equipped with a head shield as prescribed in § 179.16(c)(1).

(d) *Alternative tank car tanks for materials poisonous by inhalation.* (1) As an alternative to the authorized tank car specification noted in the column 4 of the table in paragraph (c) of this section, a car of the same authorized tank car specification but of the next lower test pressure, as prescribed in column 5 of the table at § 179.101–1, may be used provided both of the following conditions are met:

(i) The difference between the alternative and the required minimum plate thicknesses, based on the calculation prescribed in § 179.100–6 of this subchapter, is added to the alternative tank car jacket and head shield. When the jacket and head shield are made from any authorized steel with a minimum tensile strength from 70,000 p.s.i. to 80,000 p.s.i., but the required minimum plate thickness calculation is based on steel with a minimum tensile strength of 81,000 p.s.i., the thickness to be added to the jacket and head shield must be increased by a factor of 1.157. Forming allowances for heads are not required to be considered when calculating thickness differences as prescribed in this paragraph.

(ii) The tank car jacket and head shield must be manufactured from carbon steel plate as prescribed in § 179.100–7(a) of this subchapter.

ED_001691B_00009240

(e) *Verification of content.* (1) The amount of liquefied gas loaded into each tank may be determined either by measurement or calculation of the weight, except that DOT specification tank car tanks authorized for the transportation of anhydrous ammonia and ammonia solution may have the amount of liquefied gas loaded into the tank car measured by a metering device in conformance with paragraph (e)(2) of this section.

(2) *Metering device.* (i) Tank cars loaded with anhydrous ammonia or ammonia solution through the use of a metering device in conformance with this section are not required to be weighed, but must have their outage measured with a magnetic gauging device to determine that the tank car is properly loaded in conformance with this paragraph. Written procedures for loading a tank car using a metering device must be developed and made available at each location where such loading takes place. Certification in writing of the inspection and completion of these loading and/or unloading procedures must be maintained for each tank car and maintained in accordance with the recordkeeping requirements in paragraph (e)(2)(iii) of this section, and all necessary records must be completed. At a minimum, these procedures will specify:

(A) The tank car must be offered for transportation in conformance with all applicable government regulations.

(B) Any defects found when the tank car is examined before shipping must be recorded, and the tank must not be loaded until the repairs to eliminate each defect are completed.

(C) The tank car must be allowed to sit undisturbed for at least 10 minutes after loading to allow material within the tank to settle. After this has occurred a final check for leaks must be conducted prior to offering the tank car for transportation.

(ii) One out of every 10 tank cars loaded by the use of the metering device must be gauged utilizing the fixed gauging equipment on the tank car to verify by calculation the amount of anhydrous ammonia or ammonia solution contained in the tank car.

(iii) *Recordkeeping.* The following information must be maintained and be made available to any representative of the DOT upon request for each tank car loaded with the use of a metering device:

(A) Date loaded,

(B) Date shipped,

(C) Tank car reporting marks,

(D) DOT Specification,

(E) Tank car stenciled shell capacity (gallons/liters),

(F) Tank car stenciled tare weight (pounds/kilograms),

(G) Outage or innage table number,

(H) Water capacity of tank in pounds and/or kilograms,

(I) Maximum permitted filling density (see § 173.314),

(J) Specific gravity of anhydrous ammonia or ammonia solution at the reference temperature,

(K) Tank car outage (inches/meters, gallons/liters),

(L) Gallons/liters of liquid ammonia in tank car,

(M) Quantity of vapor ammonia in tank car (gallons/liters), and

(N) Total calculated ammonia (liquid & vapor) in tank car (pounds/kilograms).

(f) [Reserved]

(g) Special requirements for hydrogen chloride, refrigerated liquid, and vinyl fluoride,stabilized.

(1) The shipper shall notify the Federal Railroad Administration whenever a tank car is not received by the consignee within 20 days from the date of shipment. Notification to the Federal Railroad Administration may be made by e-mail to *Hmassist@fra.dot.gov* or telephone call to (202) 493–6229.

(2) A tank car containing hydrogen chloride, refrigerated liquid must have the auxiliary valve on the pressure relief device closed during transportation.

(3) See § 179.102–17 of this subchapter for additional requirements.

(4) Tank cars containing hydrogen chloride, refrigerated liquid, must be unloaded to such an extent that any residue remaining in the tank at a reference temperature of 32 °C (90 °F) will not actuate the reclosing pressure relief device.

(h)–(i) [Reserved]

(j) *Special requirements for materials having a primary or secondary Division 2.1 (flammable gas) hazard.* For single

ED_001691B_00009240

unit tank cars, interior pipes of loading and unloading valves, sampling devices, and gauging devices with an opening for the passage of the lading exceeding 1.52 mm (0.060 inch) diameter must be equipped with excess flow valves. For single unit tank cars constructed before January 1, 1972, gauging devices must conform to this paragraph by no later than July 1, 2006. The protective housing cover must be provided with an opening, with a weatherproof cover, above each pressure relief valve that is concentric with the discharge of the pressure relief valve and that has an area at least equal to the valve outlet area. Class DOT 109 tank cars and tank cars manufactured from aluminum or nickel plate are not authorized.

(k) *Special requirements for chlorine.* (1) Tank cars built after September 30, 1991, must have an insulation system consisting of 5.08 cm (2 inches) glass fiber placed over 5.08 cm (2 inches) of ceramic fiber. Tank cars must have excess flow valves on the interior pipes of liquid discharge valves. Tank cars constructed to a DOT 105A500W specification may be marked as a DOT 105A300W specification with the size and type of reclosing pressure relief valves required by the marked specification.

(2) DOT105J500W tank cars may be used as authorized packagings, as prescribed in this subchapter for transporting "Chlorine, 2.3 (8), UN 1017, Poison Inhalation Hazard, Zone B, RQ," if the tank cars meet all DOT specification requirements, and the tank cars are equipped with combination safety relief valves with a start-to-discharge pressure of 360 psi, rather than the 356 psi. The start-to-discharge pressure setting must be marked on the pressure relief device in conformance with applicable provisions of the AAR Specification for Tank Cars (IBR, see § 171.7 of this subchapter).

(l) *Special requirements for hydrogen sulphide.* Each multi-unit tank car must be equipped with adequate pressure relief devices of the fusible plug type having a yield temperature not over 76.66 °C (170 °F.), and not less than 69.44 °C (157 °F.). Each device must be resistant to extrusion of the fusible alloy and leak tight at 55 °C (130 °F.). A threaded solid plug must seal each valve outlet. In addition, a metal cover must protect all valves.

(m) *Special requirements for nitrosyl chloride.* Single unit tank cars and their associated service equipment, such as venting, loading and unloading valves, and reclosing pressure relief valves, must be made of metal or clad with a material that is not subject to rapid deterioration by the lading. Multi-unit tank car tanks must be nickel-clad and have reclosing pressure relief devices incorporating a fusible plug having a yield temperature of 79.44 °C (175 °F.). Reclosing pressure relief devices must be vapor tight at 54.44 °C (130 °F.).

(n) *Special requirements for hydrogen.* Each tank car must be equipped with one or more pressure relief devices. The discharge outlet for each pressure relief device must be connected to a manifold having a non-obstructed discharge area of at least 1.5 times the total discharge area of the pressure relief devices connected to the manifold. All manifolds must be connected to a single common header having a non-obstructed discharge pointing upward and extending above the top of the car. The header and the header outlet must each have a non-obstructed discharge area at least equal to the total discharge area of the manifolds connected to the header. The header outlet must be equipped with an ignition device that will instantly ignite any hydrogen discharged through the pressure relief device.

(o) *Special requirements for carbon dioxide, refrigerated liquid and nitrous oxide, refrigerated liquid.* Each tank car must have an insulation system so that the thermal conductance is not more than 0.613 kilojoules per hour, per square meter, per degree Celsius (0.03 B.t.u. per square foot per hour, per degree Fahrenheit) temperature differential. Each tank car must be equipped with one reclosing pressure relief valve having a start-to-discharge pressure not to exceed 75 percent of the tank test pressure and one non-reclosing pressure relief valve having a rupture disc design to burst at a pressure less than the tank test pressure. The discharge capacity of each pressure relief device must be sufficient to prevent building up of pressure in the tank in

ED_001691B_00009240

excess of 82.5 percent of the test pressure of the tank. Tanks must be equipped with two regulating valves set to open at a pressure not to exceed 24.1 Bar (350 psi) on DOT 105A500W tanks and at a pressure not to exceed 27.6 Bar (400 psi) on DOT 105A600W tanks. Each regulating valve and pressure relief device must have its final discharge piped to the outside of the protective housing.

[Amdt. 173–224, 55 FR 52665, Dec. 21, 1990]

EDITORIAL NOTE: For FEDERAL REGISTER citations affecting § 173.314, see the List of CFR Sections Affected, which appears in the Finding Aids section of the printed volume and at *www.fdsys.gov*.

§ 173.315 Compressed gases in cargo tanks and portable tanks.

(a) Liquefied compressed gases that are transported in UN portable tanks, DOT specification portable tanks, or cargo tanks must be prepared in accordance with this section, § 173.32, § 173.33 and subpart E or subpart G of part 180 of this subchapter, as applicable. For cryogenic liquid in cargo tanks, see § 173.318. For marking requirements for portable tanks and cargo tanks, see § 172.326 and § 172.328 of this subchapter, as applicable.

(1) *UN portable tanks:* UN portable tanks must be loaded and offered for transportation in accordance with portable tank provision T50 in § 172.102 of this subchapter.

(2) *Cargo tanks and DOT specification portable tanks:* Cargo tanks and DOT specification portable tanks must be loaded and offered for transportation in accordance with the following table:

Kind of gas	Maximum permitted filling density		Specification container required	
	Percent by weight (see Note 1)	Percent by volume (see par. (f) of this section)	Type (see Note 2)	Minimum design pressure (psig)
Ammonia, anhydrous or Ammonia solutions with greater than 50 percent ammonia (see Notes 14 and 17).	56	82, See Note 5	DOT-51, MC–330, MC–331; See Notes 12, 17 and 27.	265; See Note 17.
Ammonia solutions with more than 35 percent but not more than 50 percent ammonia.	See par. (c) of this section.	See Note 7	DOT-51, MC–330, MC–331; see Note 12.	100; See par. (c) of this section.
Bromotrifluoromethane (R–13B1 or H–1301); (See Note 9).	133	See Note 7	DOT-51, MC–330, MC–331.	365.
Butadiene, stabilized	See par. (b) of this section.	See par. (b) of this section.	DOT-51, MC–330, MC–331.	100.
Carbon dioxide, refrigerated liquid	See par. (c)(1) of this section.	95	.....do	200; see Note 3.
Chlorine	125	See Note 7	DOT-51, MC–330, MC–331.	225; See Notes 4 and 8.
Chlorodifluoroethane (R–142b) (1-Chloro 1,1-difluoroethane); (See Note 9).	100	See Note 7	DOT-51, MC–330, MC–331.	100.
Chlorodifluoromethane (R–22); (See Note 9).	105	See Note 7	DOT-51, MC–330, MC–331.	250.
Chloropentafluoroethane (R–115); (See Note 9).	See par. (c) of this section.	See Note 7	DOT-51, MC–330, MC–331.	See par. (c) of this section.
Chlorotrifluoromethane (R–13); (See Note 9).	See par. (c) of this section.	See Note 7	DOT-51, MC–330, MC–331.	See par. (c) of this section.
Dichlorodifluoromethane (R–12); (See Note 9).	119	See Note 7	DOT-51, MC–330, MC–331.	150.
Difluoroethane (R–152a); (See Note 9)	79	See Note 7	DOT-51, MC–330, MC–331.	150.
Dimethyl ether (see Note 16)	59	.....do	.....do	200.
Dimethylamine, anhydrous	59	See Note 7	DOT-51, MC–330, MC–331.	150.
Division 2.1, materials not specifically provided for in this table.	See par. (c) of this section.	See Note 7	DOT-51, MC–330, MC–331.	See Note 18.
Division 2.2, materials not specifically provided for in this table.	See par. (c) of this section.	See Note 7	DOT-51, MC–330, MC–331.	See Note 19.
Division 2.3, Hazard Zone A, materials not specifically provided for in this table.	See par. (c) of this section.	See Note 7	DOT-51, MC–330, MC–331; See Note 23.	See Note 20.
Division 2.3, Hazard Zone B, materials not specifically provided for in this table.	See par. (c) of this section.	See Note 7	DOT-51, MC–330, MC–331; See Note 23.	See Note 20.

ED_001691B_00009240

Kind of gas	Maximum permitted filling density		Specification container required	
	Percent by weight (see Note 1)	Percent by volume (see par. (f) of this section)	Type (see Note 2)	Minimum design pressure (psig)
Division 2.3, Hazard Zone C, materials not specifically provided for in this table.	See par. (c) of this section.	See Note 7	DOT-51, MC–330, MC–331; See Note 24.	See Note 21.
Division 2.3, Hazard Zone D, materials not specifically provided for in this table.	See par. (c) of this section.	See Note 7	DOT-51, MC–330, MC–331; See Note 25.	See Note 22.
Ethane, refrigerated liquid		See par. (c) of this section.	MC–331, MC–338	100; see Note 11.
Ethane-propane mixture, refrigerated liquid.		See par. (c) of this section.	MC–331, MC–338	275; see Note 11.
Hexafluoropropylene	110	See Note 7	DOT-51, MC–330, MC–331.	250.
Hydrogen chloride, refrigerated liquid	103.0	See Note 7	MC–331, MC–338	100; see Note 11.
	91.6	....do	....do	300; see Note 11.
	86.7	....do	....do	450; see Note 11.
Liquefied petroleum gas (see Note 15)	See par. (b) of this section.	See par. (b) of this section.	DOT-51, MC–330, MC–331; See Note 26.	See par. (c) of this section.
Methylacetylene-propadiene, stabilized (see Note 13).	53	90	DOT 51, MC 330, MC 331.	200.
Methylamine, anhydrous	60	See Note 7	DOT-51, MC–330, MC–331..	
Methyl chloride	84	88.5	....do	150.
Methyl chloride (optional portable tank 2,000 pounds water capacity, fusible plug).	....do	See Note 6	DOT-51	225.
Methyl mercaptan	80	90	DOT-51, MC–330, MC–331; See Note 23.	100.
Nitrous oxide, refrigerated liquid	See par. (c)(1) of this section.	95	DOT-51, MC–330, MC–331.	200; See Note 3.
Refrigerant gas, n.o.s. or Dispersant gas, n.o.s. (See Note 9).	See par. (c) of this section.	See Note 7	DOT-51, MC–330, MC–331.	See par. (c) of this section.
Sulfur dioxide (tanks not over 1,200 gallons water capacity).	125	87.5	DOT-51, MC–330, MC–331; See Note 24.	150; See Note 4.
Sulfur dioxide (tanks over 1,200 gallons water capacity).	125	87.5	DOT-51, MC–330, MC–331; See Note 24.	125; See Note 4.
Sulfur dioxide (optional portable tank 1,000–2,000 pounds water capacity, fusible plug).	125	See Note 6	DOT-51; See Note 24.	225.
Trimethylamine, anhydrous	57	See Note 7	DOT-51, MC–330, MC–331.	150.
Vinyl chloride	84 (see Note 13)	See Note 7	MC–330, MC–331	150.
Vinyl fluoride, stabilized	66	....do	....do	250; see Note 11.
Vinyl methyl ether	68	See Notes 7 and 13.	....do	100.

NOTE 1: Maximum filling density for liquefied gases is hereby defined as the percent ratio of the weight of gas in the tank to the weight of water that the tank will hold. For determining the water capacity of the tank in pounds, the weight of a gallon (231 cubic inches) of water at 60 °F. in air shall be 8.32828 pounds.

NOTE 2: See § 173.32 for authority to use other portable tanks and for manifolding cargo tanks, see paragraph (q) of this section. Specifications MC 330 cargo tanks may be painted as specified for MC 331 cargo tanks.

NOTE 3: If cargo tanks and portable tank containers for carbon dioxide, refrigerated liquid, and nitrous oxide, refrigerated liquid, are designed to conform to the requirements in Section VIII of the ASME Code for low temperature operation (IBR, see § 171.7 of this subchapter), the design pressure may be reduced to 100 psig or the controlled pressure, whichever is greater.

NOTE 4: Material must be steel. Packagings must have a corrosion allowance of 20 percent or 0.10 inch, whichever is less, added to the metal thickness. The minimum wall thickness for chlorine packagings is 0.300 inch for stainless steel or 0.625 inch for carbon steel, including corrosion allowance.

NOTE 5: Unlagged cargo tanks and portable tank containers for liquid anhydrous ammonia may be filled to 87.5 percent by volume provided the temperature of the anhydrous ammonia being loaded into such tanks is determined to be not lower than 30 °F. or provided the filling of such tanks is stopped at the first indication of frost or ice formation on the outside surface of the tank and is not resumed until such frost or ice has disappeared.

NOTE 6: Tanks equipped with fusible plugs must be filled by weight.

NOTE 7: Tanks must be filled by weight.

NOTE 8: Chlorine packagings may be shipped only if the contents are to be unloaded at one unloading point.

NOTE 9: This gas may be transported in authorized cargo tanks and portable tanks marked "DISPERSANT GAS," or "REFRIGERANT GAS."

NOTE 10: [Reserved]

ED_001691B_00009240

NOTE 11: MC–330, MC–331 and MC–338 cargo tanks must be insulated. Cargo tanks must meet all the following requirements. Each tank must have a design service temperature of minus 100 °F., or no warmer than the boiling point at one atmosphere of the hazardous material to be shipped therein, whichever is colder, and must conform to the low-temperature requirements in Section VIII of the ASME Code. When the normal travel time is 24 hours or less, the tank's holding time as loaded must be at least twice the normal travel time. When the normal travel time exceeds 24 hours, the tank's holding time as loaded must be at least 24 hours greater than the normal travel time. The holding time is the elapsed time from loading until venting occurs under equilibrium conditions. The cargo tank must have an outer jacket made of steel when the cargo tank is used to transport a flammable gas.

NOTE 12: No aluminum, copper, silver, zinc or an alloy of any of these metals shall be used in packaging construction where it comes into contact with the lading.

NOTE 13: All parts of valves and safety devices in contact with contents of tank must be of a metal or other material suitably treated if necessary, which will not cause formation of any acetylides.

NOTE 14: Specifications MC 330 and MC 331 cargo tanks constructed of other than quenched and tempered steel "(NQT)" are authorized for all grades of anhydrous ammonia. Specifications MC 330 and MC 331 cargo tanks constructed of quenched and tempered steel "(QT)" (see marking requirements of § 172.328(c) of this subchapter) are authorized for anhydrous ammonia having a minimum water content of 0.2 percent by weight. Any tank being placed in anhydrous ammonia service or a tank which has been in other service or has been opened for inspection, test, or repair, must be cleaned of the previous product and must be purged of air before loading. See § 172.203(h) of this subchapter for special shipping paper requirements.

NOTE 15: Specifications MC 330 and MC 331 cargo tanks constructed of other than quenched and tempered steel (NQT) are authorized for all grades of liquefied petroleum gases. Only grades of liquefied petroleum gases determined to be "noncorrosive" are authorized in Specification MC 330 and MC 331 cargo tanks constructed of quenched and tempered steel (QT). "Noncorrosive" means the corrosiveness of the gas does not exceed the limitations for classification 1 of the ASTM Copper Strip Classifications when tested in accordance with ASTM D 1838, "Copper Strip Corrosion by Liquefied Petroleum (LP) Gases" (IBR, see § 171.7 of this subchapter). (For (QT) and (NQT) marking requirements, see § 172.328(c) of this subchapter. For special shipping paper requirements, see § 172.203(h) of this subchapter.)

NOTE 16: Openings, inlets, and outlets on MC 330 and MC 331 cargo tanks must conform to § 178.337–8(a) of this subchapter. MC 330 and MC 331 cargo tanks must be equipped with emergency discharge control equipment as specified in § 178.337–11(a) of this subchapter.

NOTE 17: A Specification MC-330 or MC-331 cargo tank or a nonspecification cargo tank meeting, and marked in conformance with, the edition of the ASME Code in effect when it was fabricated, may be used for the transportation of anhydrous ammonia if it:

(1) Has a minimum design pressure not lower than 250 psig;

(2) Was manufactured in conformance with the ASME Code prior to January 1, 1981, according to its ASME name plate and manufacturer's data report;

(3) Is painted white or aluminum;

(4) Complies with Note 12 of this paragraph;

(5) Has been inspected and tested in accordance with subpart E of part 180 of this subchapter as specified for MC 331 cargo tanks.

(6) Was used to transport anhydrous ammonia prior to January 1, 1981;

(7) Is operated exclusively in intrastate commerce (including its operation by a motor carrier otherwise engaged in interstate commerce) in a state where its operation was permitted by the laws of that State (not including the incorporation of this subchapter) prior to January 1, 1981; and

(8) Is operated in conformance with all other requirements of this subchapter.

NOTE 18: The minimum packaging design pressure must not be less than the vapor pressure at the reference temperature of the lading plus one percent or 173.4 kPa (25 psig), whichever is less.

NOTE 19: The minimum packaging design pressure must not be less than the vapor pressure at the reference temperature of the lading.

NOTE 20: The minimum packaging design pressure must not be less than 1.5 times the vapor pressure of the lading at 46 °C (115 °F).

NOTE 21: The minimum packaging design pressure must not be less than 1.3 times the vapor pressure of the lading at 46 °C (115 °F).

NOTE 22: The minimum packaging design pressure must not be less than 1.1 times the vapor pressure of the lading at 46 °C (115 °F).

NOTE 23: Packagings must be made of stainless steel except that steel other than stainless steel may be used in accordance with the provisions of § 173.24b(b) of this part. Thickness of stainless steel for shell and heads must be the greater of 7.62 mm (0.300 inch) or the thickness required for the packaging at its minimum design pressure.

NOTE 24: Packagings must be made of stainless steel except that steel other than stainless steel may be used in accordance with the provisions of § 173.24b(b) of this part. Thickness of stainless steel for shell and heads must be the greater of 6.35 mm (0.250 inch) or the thickness required for the packaging at its minimum design pressure. For sulphur dioxide, this Note does not apply until October 1, 1994.

NOTE 25: Packagings must be made of stainless steel except that steel other than stainless steel may be used in accordance with the provisions of § 173.24b(b) of this part. Thickness for shell and heads must be as calculated for the packaging at its minimum design pressure.

NOTE 26: Non-specification cargo tanks may be used for the transportation of liquefied petroleum gas, subject to the conditions prescribed in paragraph (k) of this section.

NOTE 27: Non-specification cargo tanks may be used for transportation of Ammonia, anhydrous and ammonia solutions with greater than 50% ammonia, subject to the conditions prescribed in paragraph (m) of this section.

(b) Maximum permitted filling densities for cargo and portable tank containers for transportation of butadiene, stabilized, and liquefied petroleum gas are as follows:

Maximum specific gravity of the liquid material at 60 °F.	Maximum permitted filling density in percent of the water-weight capacity of the tanks (percent) See Note 1	
	1200 gallons or less	Over 1200 gallons
0.473 to 0.480	38	41
0.481 to 0.488	39	42
0.489 to 0.495	40	43
0.496 to 0.503	41	44
0.504 to 0.510	42	45
0.511 to 0.519	43	46

ED_001691B_00009240

Maximum specific gravity of the liquid material at 60 °F.	Maximum permitted filling density in percent of the water-weight capacity of the tanks (percent) See Note 1	
	1200 gallons or less	Over 1200 gallons
0.520 to 0.527	44	47
0.528 to 0.536	45	48
0.537 to 0.544	46	49
0.545 to 0.552	47	50
0.553 to 0.560	48	51
0.561 to 0.568	49	52
0.569 to 0.576	50	53
0.577 to 0.584	51	54
0.585 to 0.592	52	55
0.593 to 0.600	53	56
0.601 to 0.608	54	57
0.609 to 0.617	55	58
0.618 to 0.626	56	59
0.627 and over	57	60

NOTE 1: Filling is permitted by volume provided the same filling density is used as permitted by weight, except when using fixed length dip tube or other fixed maximum liquid level indicators (paragraph (f) of this section), in which case the maximum permitted filling density shall not exceed 97 percent of the maximum permitted filling density by weight contained in the table.

(1) *Odorization.* All liquefied petroleum gas shall be effectively odorized as required in Note 2 of this paragraph to indicate positively, by a distinctive odor, the presence of gas down to a concentration in air of not over one-fifth the lower limit of combustibility provided, however, that odorization is not required if harmful in the use or further processing of the liquefied petroleum gas, or if odorization will serve no useful purpose as a warning agent in such use or further processing.

NOTE 1: The lower limits of combustibility of the more commonly used liquefied petroleum gases are: Propane, 2.15 percent; butane, 1.55 percent. These figures represent volumetric percentages of gas-air mixtures in each case.

NOTE 2: The use of 1.0 pound of ethyl mercaptan, 1.0 pound of thiophane, or 1.4 pounds of amyl mercaptan per 10,000 gallons of liquefied petroleum gas shall be considered sufficient to meet the requirements of § 173.315(b)(1). This note does not exclude the use of any other odorant in sufficient quantity to meet the requirements of § 173.315(b)(1).

(c) Except as otherwise provided, the loading of a liquefied gas into a cargo tank or portable tank shall be determined by weight or by a suitable liquid level gauging device. The vapor pressure (psig) at 115 °F. must not exceed the design pressure of the cargo tank or portable tank container. The outage and filling limits for liquefied gases must be as prescribed in § 173.24b of this part, except that this requirement does not apply to:

(1) *A tank containing carbon dioxide, refrigerated liquid or nitrous oxide, refrigerated liquid.* Such tank is required to be equipped with suitable pressure control valves and may not be filled to a level exceeding 95 percent of the volumetric capacity of the tank.

(2) *A tank containing ethane, refrigerated liquid; ethane-propane mixture, refrigerated liquid; or hydrogen chloride, refrigerated liquid.* Such tank must be filled to allow at least two percent outage below the inlet of the pressure relief valve or pressure control valve under conditions of incipient opening, with the tank in a level attitude.

(d) If the loading of cargo tanks and portable tank containers with liquefied gases is to be determined by weight, the gross weight shall be checked after the filling line is disconnected in each instance. The gross weight shall be calculated from the tank capacity and tare weight set forth on the metal plate required by the specification, and the maximum filling density permitted for the material being loaded into the tank as set forth in the table, paragraph (a) of this section.

(e) If the loading of cargo tanks and portable tank containers with liquefied gases is to be determined by adjustable liquid level device, each tank and each compartment thereof shall have a thermometer well, so that the internal liquid temperature can easily be determined, and the amount of liquid in the tank shall be corrected to a 60 °F. basis. Liquid levels shall not exceed a level corresponding to the maximum filling density permitted for the material being loaded into the tank as set forth in the table in paragraph (a) of this section.

(f) When the loading of cargo tanks and portable tank containers with liquefied gases is determined only by fixed length dip tube or other fixed maximum liquid level indicator, the device shall be arranged to function at a level not to exceed the maximum permitted volume prescribed by the table, paragraph (a) of this section. Loading shall be stopped when the device functions.

ED_001691B_00009240

(g) Containers, the liquid level of which has been determined by means of a fixed length dip tube gauging device, shall not be acceptable for stowage as cargo on vessels in commerce subject to the jurisdiction of the United States Coast Guard. Nothing contained in this section shall be so construed as to prohibit the transportation on car floats or car ferries of motor vehicles laden with containers nor cargo tanks the liquid level of either of which has been determined by means of fixed length dip tube devices.

(h) Each cargo tank and portable tank, except a tank filled by weight, must be equipped with one or more of the gauging devices described in the following table which indicate accurately the maximum permitted liquid level. Additional gauging devices may be installed but may not be used as primary controls for filling of cargo tanks and portable tanks. Gauge glasses are not permitted on any cargo tank or portable tank. Primary gauging devices used on cargo tanks of less than 3500 gallons water capacity are exempt from the longitudinal location requirements specified in paragraphs (h)(2) and (3) of this section provided: The tank length does not exceed three times the tank diameter; and the cargo tank is unloaded within 24 hours after each filling of the tank.

Kind of gas	Gaging device permitted for filling purposes
Anhydrous ammonia	Rotary tube; adjustable slip tube; fixed length dip tube.
Anhydrous dimethylamine	None.
Anhydrous monomethylamine	Do.
Anhydrous trimethylamine	Do.
Aqua ammonia solution containing anhydrous ammonia.	Rotary tube; adjustable slip tube; fixed length dip tube.
Butadiene, stabilized	Do.
Carbon dioxide, refrigerated liquid	Do.
Chlorine	None.
Dichlorodifluoromethane	Do.
Difluoroethane	Do.
Difluoromonochloroethane	Do.
Dimethyl ether	Do.
Ethane, refrigerated liquid	Rotary tube; adjustable slip tube; fixed length dip tube.
Ethane-propane mixture, refrigerated liquid.	Do.
Hexafluoropropylene	None.
Hydrogen chloride, refrigerated liquid.	Do.
Liquefied petroleum gases	Rotary tube; adjustable slip tube; fixed length dip tube.
Methyl chloride	Fixed length dip tube.
Methyl mercaptan	Rotary tube; adjustable slip tube; fixed length dip tube.
Monochlorodifluoromethane	None.
Nitrous oxide, refrigerated liquid	Rotary tube; adjustable slip tube; fixed length dip tube.
Methylacetylenepropadiene, stabilized.	Do.
Refrigerant gas, n.o.s. or Dispersant gas, n.o.s.	None.
Sulfur dioxide	Fixed length dip tube.
Vinyl chloride	None.
Vinyl fluoride, inhibited	Do.

(1) The design pressure of the liquid level gauging devices shall be at least equal to the design pressure of the tank.

(2) If the primary gauging device is adjustable, it must be capable of adjustment so that the end of the tube will be in the location specified in paragraph (h)(3) of this section for at least one of the ladings to be transported, at the filling level corresponding to an average loading temperature. Exterior means must be provided to indicate this adjustment. The gauging device must be legibly and permanently marked in increments not exceeding 20 Fahrenheit degrees (or not exceeding 25 p.s.i.g. on tanks for carbon dioxide, refrigerated liquid or nitrous oxide, refrigerated liquid), to indicate the maximum levels to which the tank may be filled with liquid at temperatures above 20 °F. However, if it is not practicable to so mark the gauging device, this information must be legibly and permanently marked on a plate affixed to the tank adjacent to the gauging device.

(3) A dip tube gauging device consists of a pipe or tube with a valve at its outer end with its intake limited by an orifice not larger than 0.060 inch in diameter. If a fixed length dip tube is used, the intake must be located midway of the tank both longitudinally and laterally and at maximum permitted filling level. In tanks for liquefied petroleum gases, the intake must be located at the level reached by the lading when the tank is loaded to maximum filling density at 40 °F.

(4) Except on a tank used exclusively for the transportation of carbon dioxide, refrigerated liquid or nitrous oxide, refrigerated liquid, each opening

ED_001691B_00009240

for a pressure gauge must be restricted at or inside the tank by an orifice no larger than 0.060 inch in diameter. For carbon dioxide, refrigerated liquid or nitrous oxide, refrigerated liquid service, the pressure gauge need only be used during the filling operation.

(i) Each tank must be provided with one or more pressure relief devices which, unless otherwise specified in this part, must be of the spring-loaded type. Each valve must be arranged to discharge upward and unobstructed to the outside of the protective housing to prevent any impingement of escaping gas upon the tank. For each chlorine tank the protective housing must be in compliance with the requirements set forth in the applicable specification.

(1) The safety relief valves on each tank must meet the following conditions:

(i) The total relieving capacity, as determined by the flow formulas contained in Section 5 of CGA S–1.2 (IBR, see §171.7 of this subchapter), must be sufficient to prevent a maximum pressure in the tank of more than 120 percent of the design pressure;

(ii) The flow capacity rating, testing and marking must be in accordance with Sections 5, 6 and 7 of CGA Pamphlet S–1.2.

(iii) For an insulated tank, the required relieving capacity of the relief devices must be the same as for an uninsulated tank, unless the insulation will remain in place and will be effective under fire conditions. In this case, except for UN portable tanks, each insulated tank must be covered by a sheet metal jacket of not less than 16 gauge thickness. For UN portable tanks where the relieving capacity of the valves has been reduced on the basis of the insulation system, the insulation system must remain effective at all temperatures less than 649 °C (1200.2 °F) and be jacketed with a material having a melting point of 700 °C (1292.0 °F) or greater.

(iv) An MC 330 cargo tank that has relief valves sized by Fetterly's formula dated November 27, 1928, may be continued in service.

(2) Each safety relief valve must be arranged to minimize the possibility of tampering. If the pressure setting or adjustment is external to the valve, the safety relief valve must be provided with means for sealing the adjustment and it must be sealed.

(3) Each safety relief valve on a portable tank, other than a UN portable tank, must be set to start-to-discharge at pressure no higher than 110% of the tank design pressure and no lower than the design pressure specified in paragraph (a) of this section for the gas transported. For UN portable tanks used for liquefied compressed gases and constructed in accordance with the requirements of §178.276 of this subchapter, the pressure relief device(s) must conform to §178.276(e) of this subchapter.

(4) Except for UN portable tanks, each safety relief valve must be plainly and permanently marked with the pressure in p.s.i.g. at which it is set to discharge, with the actual rate of discharge of the device in cubic feet per minute of the gas or of air at 60 °F (15.6 °C) and 14.7 p.s.i.a., and with the manufacturer's name or trade name and catalog number. The start-to-discharge valve marking must be visible after the valve is installed. The rated discharge capacity of the device must be determined at a pressure of 120% of the design pressure of the tank. For UN portable tanks, each pressure relief device must be clearly and permanently marked as specified in §178.274(f)(1) of this subchapter.

(5) Each safety relief valve must have direct communication with the vapor space in the tank.

(6) Each connection to a safety relief valve must be of sufficient size to provide the required rate of discharge through the safety relief valve.

(7) [Reserved]

(8) Each pressure relief valve outlet must be provided with a protective device to prevent the entrance and accumulation of dirt and water. This device must not impede flow through the valve. Pressure relief devices must be designed to prevent the entry of foreign matter, the leakage of liquid and the development of any dangerous excess pressure.

(9) On tanks for carbon dioxide, refrigerated liquid or nitrous oxide, refrigerated liquid each safety relief device must be installed and located so that the cooling effect of the contents

ED_001691B_00009240

will not prevent the effective operation of the device. In addition to the required safety relief valves, these tanks may be equipped with one or more pressure controlling devices.

(10) Each tank for carbon dioxide, refrigerated liquid also may be equipped with one or more non-reclosing pressure relief devices set to function at a pressure not over two times nor less than 1.5 times the design pressure of the tank.

(11) Each portion of connected liquid piping or hose that can be closed at both ends must be provided with a safety relief valve without an intervening shut-off valve to prevent excessive hydrostatic pressure that could burst the piping or hose.

(12) Subject to conditions of paragraph (a) of this section for the methyl chloride and sulfur dioxide optional portable tanks, one or more fusible plugs examined by the Bureau of Explosives and approved by the Associate Administrator may be used on these tanks in place of safety relief valves of the spring-loaded type. The fusible plug or plugs must be in accordance with CGA Pamphlet S–1.2, to prevent a pressure rise in the tank of more than 120 percent of the design pressure. If the tank is over 30 inches long, each end must have the total specified safety discharge area.

(13) A safety relief valve on a chlorine cargo tank must conform to one of the following standards of The Chlorine Institute, Inc.: Type 1 ½ JQ225, Dwg. H51970 (IBR, see § 171.7 of this subchapter); or Type 1 ½ JQ225, Dwg. H50155 (IBR, see § 171.7 of this subchapter).

(j) *Consumer storage containers.* (1) Storage containers for liquefied petroleum gas or propane charged to five percent of their capacity or less and intended for permanent installation on consumer premises may be shipped by private motor carrier under the following conditions:

(i) Each container must be constructed in compliance with the requirements in Section VIII of the ASME Code (IBR, see § 171.7 of this subchapter) and must be marked to indicate compliance in the manner specified by the respective Code. Containers built in compliance with earlier editions starting with 1943 are authorized.

(ii) Each container must be equipped with safety devices in compliance with the requirements for safety devices on containers as specified in NFPA 58, Liquefied Petroleum Gas Code (IBR, see § 171.7 of this subchapter).

(iii) The containers must be braced or otherwise secured on the vehicle to prevent relative motion while in transit. Valves or other fittings must be adequately protected against damage during transportation. (See § 177.834(a) of this subchapter).

(2) Storage containers with a water capacity not exceeding 500 gallons charged with liquefied petroleum gas to more than five percent of their capacity and intended for permanent installation on consumer premises may be transported by private motor carrier one-way only from the consumer's premises to the container owner's nearest facility under the following conditions:

(i) Each container must be constructed in compliance with the requirements in Section VIII of the ASME Code and must be marked to indicate compliance in the manner specified by the respective Code.

(ii) Maximum permitted filling density may not exceed that specified in paragraph (b) of this section.

(iii) Prior to loading on a motor vehicle, the container must be inspected by a trained and qualified person for leaks, corroded or abraded areas, dents, distortions, weld defects, or other condition that may render the container unsafe for transportation. A record of the inspection must be legibly signed and dated by the person performing the inspection and retained by the container owner for two years. The signature on the inspection record represents a certification that the container has been inspected and has no defects that would render it unsafe for transportation under the HMR. The record of inspection must include the date of inspection, the inspector's contact information (such as a telephone number), the container's serial number and container size (water capacity), estimated amount of hazardous material, and the origin and destination of shipment.

ED_001691B_00009240

(iv) Only one storage container may be transported on a motor vehicle.

(v) For loading on a motor vehicle, the container must be lifted by slings, which must be completely wrapped around the container. Lifting lugs may not be used. The slings must be rated to a weight sufficient to accommodate the container and its lading and shall comply with ASME B30.9 on slings used for lifting purposes, and must be visually inspected prior to each use. A sling showing evidence of tears, fraying, or other signs of excessive wear may not be used.

(vi) The storage container must be secured on a motor vehicle so that the container is completely within the envelope of the vehicle and does not extend beyond the vehicle frame.

(vii) The storage container must be placed on the vehicle in a manner, such as in a cradle, which ensures that no weight is placed on the supporting legs during transportation.

(viii) The storage container must be secured against movement during transportation. Bracing must conform with the requirements of paragraph (j)(1)(iii) of this section and § 177.834(a) of this subchapter and with Section 6–5.2 of NFPA 58, Liquefied Petroleum Gas Code. Straps or chains used as tiedowns must be rated to exceed the maximum load to be transported and conform to the requirements in §§ 393.100 through 393.106 of this title.

(ix) Tow trailers used to transport storage containers in accordance with this paragraph (j)(2) must provide rear end protection that conforms to requirements in § 393.86 of this title.

(3) Storage containers of less than 1,042 pounds water capacity (125 gallons) may be shipped when charged with liquefied petroleum gas in compliance with DOT filling density.

(k) A nonspecification cargo tank meeting, and marked in conformance with, the edition of Section VIII of the ASME Code in effect when it was fabricated may be used for the transportation of liquefied petroleum gas provided it meets all of the following conditions:

(1) It must have a minimum design pressure no lower than 250 psig.

(2) It must have a capacity of 13,247.5 L (3,500 water gallons) or less.

(3) It must have been manufactured in conformance with Section VIII of the ASME Code prior to January 1, 1981, according to its ASME name plate and manufacturer's data report.

(4) It must conform to the applicable provisions of NFPA 58, except to the extent that provisions in NFPA 58 are inconsistent with requirements in parts 178 and 180 of this subchapter.

(5) It must be inspected, tested, and equipped in accordance with subpart E of part 180 of this subchapter as specified for MC 331 cargo tank motor vehicles.

(6) Except as provided in this paragraph (k), it must be operated exclusively in intrastate commerce, including its operation by a motor carrier otherwise engaged in interstate commerce, in a state where its operation was permitted by law (not including the incorporation of this subchapter) prior to January 1, 1981. A cargo tank motor vehicle operating under authority of this section may cross state lines to travel to and from a qualified assembly, repair, maintenance, or requalification facility. The cargo tank need not be cleaned and purged, but it may not contain liquefied petroleum gas in excess of five percent of the water capacity of the cargo tank. If the vehicle engine is supplied fuel from the cargo tank, enough fuel in excess of five percent of the cargo tank's water capacity may be carried for the trip to or from the facility.

(7) It must have been used to transport liquefied petroleum gas prior to January 1, 1981.

(8) It must be operated in conformance with all other requirements of this subchapter.

(l) Anhydrous ammonia must not be offered for transportation or transported in specification MC 330 and MC 331 cargo tanks constructed of quenched and tempered ("QT") steel except as provided in this paragraph.

(1) The ammonia must have a minimum water content of 0.2 percent by weight. Any addition of water must be made using steam condensate, deionized, or distilled water.

(2) Except as otherwise provided in this paragraph, each person offering for

ED_001691B_00009240

transportation or transporting anhydrous ammonia shall perform a periodic analysis for prescribed water content in the ammonia. The analysis must be performed:

(i) From a sample of the ammonia in storage taken at least once every 7 days, or each time ammonia is added to the storage tanks, whichever is less frequent; or

(ii) At the time the cargo tanks are loaded, then a sample of the ammonia taken from at least one loaded cargo tank out of each 10 loads, or from one cargo tank every 24 hours, whichever is less frequent; or

(iii) At the same frequency as described in paragraph (l)(2)(ii) of this section, from a sample taken from the loading line to the cargo tank.

(3) If water is added at the time of loading:

(i) The sample for analysis must be taken from a point in the loading line between the water injection equipment and the cargo tank; and

(ii) Positive provisions must be made to assure water injection equipment is operating.

(4) If water injection equipment becomes inoperative, suitable corrective maintenance must be performed after which a sample from the first loaded cargo tank must be analyzed for prescribed water content.

(5) The analysis method for water content must be as prescribed in CGA G–2.2, "Tentative Standard Method for Determining Minimum of 0.2 percent water in Anhydrous Ammonia," (IBR, see §171.7 of this subchapter).

(6) Records indicating the results of the analysis taken, as required by this paragraph, must be retained for 2 years and must be open to inspection by a representative of the Department.

(7) Each person receiving anhydrous ammonia containing 0.2 per cent water by weight may offer for transportation or transport that ammonia without performing the prescribed analysis for water content provided:

(i) The ammonia received was certified as containing 0.2 percent water as prescribed in §§172.203(h)(l)(i) and 177.817(a) of this subchapter; and

(ii) The amount of water in the ammonia has not been reduced by any means.

(m) *General.* (1) A cargo tank that is commonly known as a nurse tank and considered an implement of husbandry transporting anhydrous ammonia and operated by a private motor carrier exclusively for agricultural purposes is excepted from the specification requirements of part 178 of this subchapter if it:

(i) Has a minimum design pressure of 250 psig, meets the requirements of the edition of Section VIII of the ASME Code in effect at the time it was manufactured, and is marked with a valid ASME plate.

(ii) Is equipped with pressure relief valves meeting the requirements of CGA Standard S–1.2 (IBR, see §171.7 of this subchapter);

(iii) Is painted white or aluminum;

(iv) Has a capacity of 3,000 gallons or less;

(v) Is loaded to a filling density no greater than 56 percent;

(vi) Is securely mounted on a farm wagon or meets paragraph (m)(3) of this section; and

(vii) Is in conformance with the requirements of part 172 of this subchapter except that shipping papers are not required; and it need not be marked or placarded on one end if that end contains valves, fittings, regulators or gauges when those appurtenances prevent the markings and placard from being properly placed and visible.

(2) *Nurse tanks with missing or illegible ASME plates.* Nurse tanks with missing or illegible ASME plates may continue to be operated provided they conform to the following requirements:

(i) Each nurse tank must undergo an external visual inspection and testing in accordance with §180.407(d) of this subchapter.

(ii) Each nurse tank must be thickness tested in accordance with §180.407(i) of this subchapter. A nurse tank with a capacity of less than 1,500 gallons must have a minimum head thickness of 0.203 inch and a minimum shell thickness of 0.239 inch. A nurse tank with a capacity of 1,500 gallons or more must have a minimum thickness of 0.250 inch. Any nurse tank with a thickness test reading of less than that specified in this paragraph at any point

ED_001691B_00009240

must be removed from hazardous materials service.

(iii) Each nurse tank must be pressure tested in accordance with § 180.407(g) of this subchapter. The minimum test pressure is 375 psig. Pneumatic testing is not authorized.

(iv) Each nurse tank must be inspected and tested by a person meeting the requirements of § 180.409(d) of this subchapter. Furthermore, each nurse tank must have the tests performed at least once every five years after the completion of the initial tests.

(v) After each nurse tank has successfully passed the visual, thickness, and pressure tests, welded repairs on the tank are prohibited.

(vi) After the nurse tank has successfully passed the visual, thickness, and pressure tests, it must be marked in accordance with § 180.415(b), and permanently marked near the test and inspection markings with a unique owner's identification number in letters and numbers at least ½ inch in height and width.

(vii) Each nurse tank owner must maintain a copy of the test inspection report prepared by the inspector. The test report must contain the results of the test and meet the requirements in § 180.417(b) and be made available to a DOT representative upon request.

(3) *Field truck mounted tanks.* A non-DOT specification cargo tank (nurse tank) securely mounted on a field truck is authorized under the following conditions:

(i) The tank is in conformance with all the requirements of paragraph (m)(1) of this section, except that the requirement in paragraph (m)(1)(vi) does not apply;

(ii) The tank is inspected and tested in accordance with subpart E of part 180 of this subchapter as specified for an MC 331 cargo tank;

(iii) The tank is restricted to rural roads in areas within 50 miles of the fertilizer distribution point where the nurse tank is loaded; and

(iv) For the purposes of this section, a field truck means a vehicle on which a nurse tank is mounted that is designed to withstand off-road driving on hilly terrain. Specifically, the vehicle must be outfitted with stiffer suspension (for example, additional springs or airbags) than would be necessary for a comparable on-road vehicle, a rear axle ratio that provides greater low end torque, and a braking system and tires designed to ensure stability in hilly terrain. The field truck must have low annual over-the-road mileage and be used exclusively for agricultural purposes.

(n) *Emergency discharge control for cargo tank motor vehicles in liquefied compressed gas service*—(1) *Required emergency discharge control equipment.* Each cargo tank motor vehicle in liquefied compressed gas service must have an emergency discharge control capability as specified in the following table:

§ 173.315(n)(1)(*)	Material	Delivery service	Required emergency discharge control capability
(i)	Division 2.2 materials with no subsidiary hazard, excluding anhydrous ammonia.	All	None.
(ii)	Division 2.3 materials	All	Paragraph (n)(2) of this section.
(iii)	Division 2.2 materials with a subsidiary hazard, Division 2.1 materials, and anhydrous ammonia.	Other than metered delivery service.	Paragraph (n)(2) of this section.
(iv)	Division 2.2 materials with a subsidiary hazard, Division 2.1 materials, and anhydrous ammonia in a cargo tank motor vehicle with a capacity of 13,247.5 L (3,500 water gallons) or less.	Metered delivery service	Paragraph (n)(3) of this section.

ED_001691B_00009240

§ 173.315(n)(1)(*)	Material	Delivery service	Required emergency discharge control capability
(v)	Division 2.2 materials with a subsidiary hazard, Division 2.1 materials, and anhydrous ammonia in a cargo tank motor vehicle with a capacity greater than 13,247.5 L (3,500 water gallons).	Metered delivery service	Paragraph (n)(3) of this section, and, for obstructed view deliveries where permitted by § 177.840(p) of this subchapter, paragraph (n)(2) or (n)(4) of this section.
(vi)	Division 2.2 materials with a subsidiary hazard, Division 2.1 materials, and anhydrous ammonia in a cargo tank with a capacity of greater than 13,247.5 L (3,500 water gallons).	Both metered delivery and other than metered delivery service.	Paragraph (n)(2) of this section, provided the system operates for both metered and other than metered deliveries; otherwise, paragraphs (n)(2) and (n)(3) of this section.

(2) *Cargo tank motor vehicles in other than metered delivery service.* A cargo tank motor vehicle in other than metered delivery service must have a means to automatically shut off the flow of product without the need for human intervention within 20 seconds of an unintentional release caused by a complete separation of a liquid delivery hose (passive shut-down capability).

(i) Designed flow of product through a bypass in the valve is acceptable when authorized by this subchapter.

(ii) The design for the means to automatically shut off product flow must be certified by a Design Certifying Engineer. The certification must consider any specifications of the original component manufacturer and must explain how the passive means to shut off the flow of product operates. It must also outline the parameters (e.g., temperature, pressure, types of product) within which the passive means to shut off the flow of product is designed to operate. All components of the discharge system that are integral to the design must be included in the certification. A copy of the design certification must be provided to the owner of the cargo tank motor vehicle on which the equipment will be installed.

(iii) Installation must be performed under the supervision of a Registered Inspector unless the equipment is installed and removed as part of regular operation (e.g., a hose). The Registered Inspector must certify that the equipment is installed and tested, if it is possible to do so without damaging the equipment, in accordance with the Design Certifying Engineer's certification. The Registered Inspector must provide the certification to the owner of the cargo tank motor vehicle.

(3) *Cargo tank motor vehicles in metered delivery service.* When required by the table in paragraph (n)(1) of this section, a cargo tank motor vehicle must have an off-truck remote means to close the internal self-closing stop valve and shut off all motive and auxiliary power equipment upon activation by a qualified person attending the unloading of the cargo tank motor vehicle (off-truck remote shut-off). It must function reliably at a distance of 45.72 m (150 feet). The off-truck remote shut-off activation device must not be capable of reopening the internal self-closing stop valve after emergency activation.

(i) The emergency discharge control equipment must be installed under the supervision of a Registered Inspector. Each wireless transmitter/receiver must be tested to demonstrate that it will close the internal self-closing stop valve and shut off all motive and auxiliary power equipment at a distance of 91.44 m (300 feet) under optimum conditions. Emergency discharge control equipment that does not employ a wireless transmitter/receiver must be tested to demonstrate its functioning at the maximum length of the delivery hose.

(ii) The Registered Inspector must certify that the remote control equipment is installed in accordance with the original component manufacturer's specifications and is tested in accordance with paragraph (n)(3)(i) of this section. The Registered Inspector must

ED_001691B_00009240

provide the owner of the cargo tank motor vehicle with this certification.

(4) *Query systems.* When a transmitter/receiver system is used to satisfy the requirements of paragraph (n)(1)(v) of this section, it must close the internal self-closing stop valve and shut off all motive and auxiliary power equipment unless the qualified person attending the unloading operation prevents it from doing so at least once every five minutes. Testing and certification must be as specified in paragraph (n)(3) of this section.

(5) *Compliance dates.* (i) Each specification MC 331 cargo tank motor vehicle with a certificate of construction issued two or more years after July 1, 1999, must have an appropriate emergency discharge control capability as specified in this paragraph (n).

(ii) No MC 330, MC 331, or nonspecification cargo tank motor vehicle authorized under paragraph (k) of this section may be operated unless it has an appropriate emergency discharge control capability as specified in this paragraph (n) no later than the date of its first scheduled pressure retest required after July 1, 2001. No MC 330, MC 331 or nonspecification cargo tank motor vehicle authorized under paragraph (k) of this section may be operated after July 1, 2006, unless it has been equipped with emergency discharge control equipment as specified in this paragraph (n).

(iii) No MC 330 or MC 331 cargo tank motor vehicle with a capacity over 13,247 L (3,500 gallons) used in metered delivery service may be operated unless it has an appropriate discharge control capability as specified in this paragraph (n) no later than July 1, 2003, or the date of its first scheduled pressure retest required after July 1, 2001, whichever is earlier.

(o) *Chlorine cargo tank motor vehicles.* Each cargo tank motor vehicle used for the transportation of chlorine must meet the requirements in the following:

(1) Any hose, piping, or tubing used for loading or unloading that is mounted or carried on the motor vehicle may not be attached to any valve and must be capped at all ends to prevent the entry of moisture, except at the time of loading or unloading. Except at the time of loading and unloading, the pipe connection of each angle valve must be closed with a screw plug which is chained or otherwise fastened to prevent misplacement.

(2) Each chlorine cargo tank motor vehicle angle valve must be tested to be leak free at not less than 225 psig using dry air or inert gas before installation and thereafter every 2 years when performing the required periodic retest in § 180.407(c) of this subchapter. Prior to each loading, the cargo tank motor vehicle must be inspected and the angle valves and gasketed joints must be examined and tested at a pressure of not less than 50 psig to determine that they are not leaking and are in proper condition for transportation. Any leaks must be corrected before the cargo tank motor vehicle is offered for transportation.

(3) Excess flow valves on the cargo tank motor vehicle must meet the requirements of paragraph (n) of this section.

(p) *Fusible elements.* Each MC 330, MC 331, or nonspecification cargo tank authorized under paragraph (k) of this section must have a thermal means of closure for each internal self-closing stop valve as specified in § 178.337–8(a)(4) of this subchapter.

(q) Manifolding is authorized for cargo tanks containing anhydrous ammonia provided each individual cargo tank is equipped with a pressure relief device or valves and gauging devices as required by paragraphs (h) and (i) of this section. Each valve must be tightly closed while the cargo tank is in transit. Each cargo tank must be filled separately.

[29 FR 18743, Dec. 29, 1964. Redesignated at 32 FR 5606, Apr. 5, 1967]

EDITORIAL NOTE: For FEDERAL REGISTER citations affecting § 173.315, see the List of CFR Sections Affected, which appears in the Finding Aids section of the printed volume and at *www.fdsys.gov.*

§ 173.316 Cryogenic liquids in cylinders.

(a) *General requirements.* (1) A cylinder may not be loaded with a cryogenic liquid colder than the design service temperature of the packaging.

(2) A cylinder may not be loaded with any material which may combine

ED_001691B_00009240

chemically with any residue in the packaging to produce an unsafe condition.

(3) The jacket covering the insulation on a cylinder used to transport any flammable cryogenic liquid must be made of steel.

(4) A valve or fitting made of aluminum with internal rubbing or abrading aluminum parts that may come in contact with oxygen in the cryogenic liquid form may not be installed on any cylinder used to transport oxygen, cryogenic liquid unless the parts are anodized in accordance with ASTM Standard B 580 (IBR, see § 171.7 of this subchapter).

(5) An aluminum valve, pipe or fitting may not be installed on any cylinder used to transport any flammable cryogenic liquid.

(6) Each cylinder must be provided with one or more pressure relief devices, which must be installed and maintained in compliance with the requirements of this subchapter.

(7) Each pressure relief device must be installed and located so that the cooling effect of the contents during venting will not prevent effective operation of the device.

(8) All pressure relief device inlets must under maximum filling conditions be situated in the vapor space of the closed cryogenic receptacle and the devices must be arranged to ensure that the escaping vapor is discharged unobstructed.

(9) The maximum weight of the contents in a cylinder with a design service temperature colder than −320 °F. may not exceed the design weight marked on the cylinder (see § 178.35 of this subchapter).

(b) *Pressure control systems.* Each cylinder containing a cryogenic liquid must have a pressure control system that conforms to § 173.301(f) and is designed and installed so that it will prevent the cylinder from becoming liquid full.

(c) *Specification cylinder requirements and filling limits.* Specification DOT-4L cylinders (§ 178.57 of this subchapter) are authorized for the transportation of cryogenic liquids when carried in the vertical position as follows:

(1) For purposes of this section, "filling density," except for hydrogen, is defined as the percent ratio of the weight of lading in the packaging to the weight of water that the packaging will hold at 60 °F. (1 lb. of water = 27.737 cubic inches at 60 °F.).

(2) The cryogenic liquids of argon, nitrogen, oxygen, helium and neon must be loaded and shipped in accordance with the following table:

Pressure control valve setting (maximum start-to-discharge pressure psig)	Maximum permitted filling density (percent by weight)					
	Air	Argon	Nitrogen	Oxygen	Helium	Neon
45	82.5	133	76	108	12.5	109
75	80.3	130	74	105	12.5	104
105	78.4	127	72	103	12.5	100
170	76.2	122	70	100	12.5	92
230	75.1	119	69	98	12.5	85
295	73.3	115	68	96	12.5	77
360	70.7	113	65	93	12.5	
450	65.9	111	61	91	12.5	
540	62.9	107	58	88	12.5	
625	60.1	104	55	86	12.5	
Design service temperature (°F.)	−320	−320	−320	−320	−452	−411

(3) Hydrogen (minimum 95 percent parahydrogen) must be loaded and shipped as follows:

Column 1	Column 2
Design service temperature	Minus 423 °F. or colder.
Maximum permitted filling density, based on cylinder capacity at minus 423 °F (see Note 1).	6.7 percent.
The pressure control valve must be designed and set to limit the pressure in the cylinder to not more than.	17 psig.

NOTE 1: The filling density for hydrogen, cryogenic liquid is defined as the percent ratio of the weight of lading in a packaging to the weight of water that the packaging will hold at minus 423 °F. The volume of the

ED_001691B_00009240

packaging at minus 423 °F is determined in cubic inches. The volume is converted to pounds of water (1 lb. of water = 27.737 cubic inches).

(i) Each cylinder must be constructed, insulated and maintained so that during transportation the total rate of venting shall not exceed 30 SCF of hydrogen per hour.

(ii) In addition to the marking requirements in §178.35 of this subchapter, the total rate of venting in SCF per hour (SCFH) shall be marked on the top head or valve protection band in letters at least one-half inch high as follows: "VENT RATE**SCFH" (with the asterisks replaced by the number representing the total rate of venting, in SCF per hour).

(iii) Carriage by highway is subject to the conditions specified in §177.840(a) of this subchapter.

(d) *Mixtures of cryogenic liquid.* Where charging requirements are not specifically prescribed in paragraph (c) of this section, the cryogenic liquid must be shipped in packagings and under conditions approved by the Associate Administrator.

[Amdt. 173–166, 48 FR 27695, June 16, 1983, as amended by Amdt. 173–166, 49 FR 24314, June 12, 1984; Amdt. 173–180, 49 FR 42735, Oct. 24, 1984; Amdt. 173–201, 52 FR 13041, Apr. 20, 1987; Amdt. 173–250, 61 FR 25942, May 23, 1996; Amdt. 173–261, 62 FR 24741, May 6, 1997; 66 FR 45379, Aug. 28, 2001; 67 FR 16013, Sept. 27, 2002; 68 FR 75742, Dec. 31, 2003; 69 FR 54046, Sept. 7, 2004; 78 FR 1092, Jan. 7, 2013]

§173.318 Cryogenic liquids in cargo tanks.

(a) *General requirements.* (1) A cargo tank may not be loaded with a cryogenic liquid colder than the design service temperature of the packaging.

(2) A cargo tank may not be loaded with any material that may combine chemically with any residue in the packaging to produce an unsafe condition (see §178.338–15).

(3) The jacket covering the insulation on a tank used to transport a cryogenic liquid must be made of steel if the cryogenic liquid:

(i) Is to be transported by vessel (see §176.76(g) of this subchapter); or

(ii) Is oxygen or a flammable material.

(4) A valve or fitting made of aluminum with internal rubbing or abrading aluminum parts that may come in contact with oxygen in the cryogenic liquid form may not be installed on any cargo tank used to transport oxygen, cryogenic liquid unless the parts are anodized in accordance with ASTM Standard B 580 (IBR, see §171.7 of this subchapter).

(5) An aluminum valve, pipe or fitting, external to the jacket that retains lading during transportation may not be installed on any cargo tank used to transport oxygen, cryogenic liquid or any flammable cryogenic liquid.

(6) A cargo tank used to transport oxygen, cryogenic liquid must be provided with a manhole (see §178.338–6 of this subchapter).

(b) *Pressure relief systems and pressure control valves*—(1) *Types of pressure relief systems*—(i) *Tanks in oxygen and flammable cryogenic liquid service.* Except as otherwise provided in this paragraph, each tank in oxygen and flammable cryogenic liquid service must be protected by two independent pressure relief systems which are not connected in series, namely:

(A) A primary system of one or more pressure relief valves; and

(B) A secondary system of one of more frangible discs or pressure relief valves. For a tank in carbon monoxide service, the secondary system must be pressure relief valves only.

(ii) *Tanks in helium and atmospheric gas (except oxygen) cryogenic liquid service.* For a tank used in helium and atmospheric gas (except oxygen) cryogenic liquid service, the tank must be protected by at least one pressure relief system consisting of:

(A) One or more pressure relief valves; or

(B) A combination of one or more pressure relief valves and one or more frangible discs.

(2) *Capacities of pressure relief systems*—(i) *Tanks in oxygen or flammable cryogenic liquid service.* For tanks in oxygen or flammable cryogenic liquid service, the primary system and the secondary system of pressure relief devices must each have a flow capacity equal to or greater than that calculated by the applicable formula in paragraph 5.3.2 or paragraph 5.3.3 of CGA S–1.2 (IBR, see §171.7 of this subchapter). In addition:

ED_001691B_00009240

(A) The primary pressure relief system must have a total flow capacity at a pressure not exceeding 120 percent of the tank's design pressure.

(B) The secondary pressure relief system must have a total flow capacity at a pressure not exceeding 150 percent of the tank's design pressure.

(C) The flow capacity and rating must be verified and marked by the manufacturer of the device in accordance with CGA Pamphlet S–1.2.

(ii) *Tanks in helium and atmospheric gas (except oxygen) cryogenic liquid service.* For tanks in helium and atmospheric gas (except oxygen) cryogenic liquid service, the pressure relief system must have a flow capacity equal to or greater than that calculated by the applicable formula in paragraphs 5.3.2 or 5.3.3 of CGA Pamphlet S–1.2. If the pressure relief system consists of a combination of pressure relief valves and frangible discs, the pressure relief valves must have a total venting capacity equal to or greater than that calculated by the applicable formula in paragraph 4.1.10.1.1 of CGA Pamphlet S–1.2. The pressure relief system must have this total flow capacity at a pressure not exceeding 150 percent of the tank's design pressure. The flow capacity and rating must be verified and marked by the manufacturer of the device in accordance with CGA Pamphlet S–1.2.

(3) *Type and construction of pressure relief devices.* (i) Each pressure relief device must be designed and constructed for a pressure equal to or exceeding the tank's design pressure at the coldest temperature reasonably expected to be encountered.

(ii) Pressure relief devices must be either spring-loaded pressure relief valves or frangible discs. Pressure relief valves must be of a type that automatically open and close at predetermined pressures.

(4) *Setting of pressure relief devices.* (i) On a tank used in oxygen or flammable cryogenic liquid service, the pressure relief devices must perform as follows.

(A) Each pressure relief valve in the primary relief system must be set-to-discharge at a pressure no higher than 110 percent of the tank's design pressure.

(B) Each pressure relief device in the secondary pressure relief system must be designed to commence functioning at a pressure no lower than 130 percent and no higher than 150 percent of the tank's design pressure.

(ii) On a tank used in helium and atmospheric gas (except oxygen) cryogenic liquid service, the pressure relief devices in the pressure relief system must be designed to commence functioning at no higher than 150 percent of the tank's design pressure.

(5) *Optional pressure relief devices and pressure control valves.* In addition to the required pressure relief devices, a cargo tank in cryogenic liquid (except carbon monoxide) service may be equipped with one or both of the following:

(i) One or more pressure control valves set at a pressure below the tank's design pressure.

(ii) One or more frangible discs set to function at a pressure not less than one and one-half times or more than two times the tank's design pressure.

(6) *Maximum filling rate.* (i) For a tank used in oxygen and flammable cryogenic liquid service, the maximum rate at which the tank is filled must not exceed the liquid flow capacity of the primary pressure relief system rated at a pressure not exceeding 120 percent of the tank's design pressure.

(ii) On a tank used in helium and atmospheric gas (except oxygen) cryogenic liquid service, the maximum rate at which the tank is filled must not exceed the liquid flow capacity of the pressure relief valves rated at 150 percent of the tank's design pressure.

(7) *Arrangement and location of pressure relief devices.* (i) The discharge from any pressure relief system must be directed upward and be unobstructed to the outside of the protective housing in such a manner as to prevent impingement of gas upon the jacket or any structural part of the vehicle.

(ii) Each pressure relief valve must be arranged or protected to prevent the accumulation of foreign material between the relief valve and the atmospheric discharge opening in any relief piping. The arrangement must not impede flow through the device.

ED_001691B_00009240

(iii) Each pressure relief valve must be designed and located to minimize the possibility of tampering. If the pressure setting or adjustment is external to the valve, the valve adjustment must be sealed.

(iv) Each pressure relief device must have direct communication with the vapor space of the tank at the midlength of the top centerline.

(v) Each pressure relief device must be installed and located so that the cooling effect of the contents during venting will not prevent the effective operation of the device.

(vi) All pressure relief device inlets must under maximum filling conditions be situated in the vapor space of the closed cryogenic receptacle and the devices must be arranged to ensure that the escaping vapor is discharged unobstructed.

(8) *Connections.* (i) Each connection to a pressure relief device must be of sufficient size to allow the required rate of discharge through the pressure relief device. The inlet connection must be not less than one-half inch nominal pipe size.

(ii) A shut-off valve may be installed in a pressure relief system only when the required relief capacity is provided at all times.

(9) *Pressure relief devices for piping hose and vacuum-insulated jackets.* (i) Each portion of connected liquid piping or hose that can be closed at both ends must be provided with either a hydrostatic pressure relief valve without an intervening shut-off valve, or a check valve permitting flow from the pipe or hose into the tank. If used, the relief valve must be located so as to prevent its discharge from impinging on the tank, piping, or operating personnel.

(ii) On a vacuum-insulated cargo tank the jacket must be protected by a suitable relief device to release internal pressure. The discharge area of this device must be at least 0.00024 square inch per pound of water capacity of the tank. This relief device must function at a pressure not exceeding the internal design pressure of the jacket, calculated in accordance with Section VIII of the ASME Code (IBR, see §171.7 of this subchapter), or 25 psig, whichever is less.

(10) *Tank inlet, outlet, pressure relief device and pressure control valve markings.* (i) Each tank inlet and outlet, except pressure relief devices and pressure control valves, must be permanently marked to indicate whether it communicates with "vapor" or "liquid" when the tank is filled to the maximum permitted filling density.

(ii) Each pressure relief valve must be plainly and permanently marked with the pressure, in psig, at which it is set-to-discharge, the discharge rate of the device in SCF per minute (SCFM) of free air, and the manufacturer's name or trade name and catalog number. The marked set-to-discharge pressure valve must be visible with the valve in its installed position. The rated discharge capacity of the device must be determined at a pressure of 120 percent of the design pressure of the tank.

(iii) Each pressure control valve must be plainly and permanently marked with the pressure, in psig, at which it is set-to-discharge.

(c) *Weight of lading requirements.* The weight of a cryogenic liquid in the tank must be determined by weighing or by the use of a liquid level gauging device authorized in §178.338–14(a) of this subchapter, and may not exceed the lesser of:

(1) The weight of lading in the tank, based on the water capacity stamped on the nameplate (§178.338–18(a)(4) of this subchapter) and the appropriate maximum permitted filling density specified in paragraph (f) of this section; or

(2) The maximum weight of lading for which the cargo tank was designed, as marked on the specification plate (see §178.338–18(b) of this subchapter).

(d) *Outage.* Except for a cargo tank containing helium, cryogenic liquid, a cargo tank offered for transportation must have an outage of at least two percent below the inlet of the pressure relief device or pressure control valve, under conditions of incipient opening, with the tank in a level attitude.

(e) *Temperature.* A flammable cryogenic liquid in a cargo tank at the start of travel must be at a temperature sufficiently cold that the pressure setting of the pressure control valve or the required pressure relief valve,

ED_001691B_00009240

whichever is lower, will not be reached in less time than the marked rated holding time for the cryogenic liquid (see paragraph (g)(3) of this section and § 178.338–9(b) of this subchapter).

(f) *Specification MC–338 (§ 178.338 of this subchapter) cargo tanks* are authorized for the shipment of the following cryogenic liquids subject to the following additional requirements:

(1) For purposes of this section, ''filling density'' is defined as the percent ratio of the weight of lading in the tank to the weight of water that the tank will hold at the design service temperature (one pound of water = 27.737 cubic inches at 60 °F., or one gallon of water = 231 cubic inches at 60 °F. and weighs 8.32828 pounds).

(2) *Air, argon, helium, nitrogen, and oxygen, cryogenic liquids* must be loaded and shipped in accordance with the following table:

PRESSURE CONTROL VALVE SETTING OR RELIEF VALVE SETTING

Maximum set-to-discharge pressure (psig)	Maximum permitted filling density (percent by weight)				
	Air	Argon	Helium	Nitrogen	Oxygen
26			12.5.		
30	80.3	129	12.5	74	105
40	79.2		12.5.		
50	78.0		12.5.		
55	77.3	125	12.5	71	102
60	76.9		12.5.		
80	75.3		12.5.		
85	75.1	121	12.5		99
100	73.0		12.5.		
105	73.7		12.5	67.	
120	72.2		12.5.		
140	71.4		12.5.		
145	70.9	115	12.5	64	94
180	68.3		12.5.		
200	67.3	110	12.5	61	91
250	63.3	106	12.5	57	87
275	62.3	105	12.5	56	86
325	59.4	101		53	83
Design service temperature.	−320 °F	−320 °F	−452 °F	−320 °F	−320 °F

(3) *Carbon monoxide, hydrogen (minimum 95 percent para-hydrogen), ethylene, and methane or natural gas, cryogenic liquids* must be loaded and shipped in accordance with the following table:

PRESSURE CONTROL VALVE SETTING OR RELIEF VALVE SETTING

Maximum set-to-discharge pressure (psig)	Maximum permitted filling density (percent by weight)			
	Carbon monoxide	Ethylene	Hydrogen	Methane or natural gas
13			6.6.	
15	75.0		6.6	40.5
17	74.0		6.6.	
20		53.5		40.0
25	73.0.			
30	72.0	52.7	6.3	39.1
35.				
40		52.0		38.6
45	71.5.			
50		51.4	6.0	38.2
55.				
60		50.8.		
70		50.2	5.7	37.5
90		49.2.		
95.				
100		48.4	5.4	36.6
115		48.2.		
125			5.0.	
150			4.5.	

ED_001691B_00009240

PRESSURE CONTROL VALVE SETTING OR RELIEF VALVE SETTING—Continued

Maximum set-to-discharge pressure (psig)	Maximum permitted filling density (percent by weight)			
	Carbon monoxide	Ethylene	Hydrogen	Methane or natural gas
175	62.5	45.8.		
285	56.0.			
Design service temperature.	−320 °F	−155 °F	−423 °F	−260 °F

(4) *Mixtures of cryogenic liquid.* Where charging requirements are not specifically prescribed in this paragraph (f), the cryogenic liquid must be shipped in packagings and under conditions approved by the Associate Administrator.

(g) *One-way travel time; marking.* The jacket of a cargo tank to be used to transport a flammable cryogenic liquid must be marked on its right side near the front, in letters and numbers at least two inches high, "One-Way-Travel-Time ___ hrs.", with the blank filled in with a number indicating the one-way travel time (OWTT), in hours, of the cargo tank for the flammable cryogenic liquid to be transported. A cargo tank that is partially unloaded at one or more locations must have additional marking "One-Way-Travel-Time ___ hrs. ___ psig to ___ psig at ___ percent filling density," with the second blank filled in with the pressure existing after partial unloading and the third blank filled in with the set-to-discharge pressure of the control valve or pressure relief valve, and the fourth blank with the filling density following partial unloading. Multiple OWTT markings for different pressure levels are permitted. The abbreviation "OWTT" may be used in place of the words "One-way-travel-time" in the marking required by this paragraph.

(1) OWTT is based on the marked rated holding time (MRHT) of the cargo tank for the cryogenic liquid to be transported in the cargo tank. If the MRHT for the flammable cryogenic liquid is not displayed on or adjacent to the specification plate, this MRHT may be derived.

(2) The MRHT is converted to OWTT, in hours, as follows:

(i) For a tank with an MRHT of 72 hours or less,

$$OWTT = (MRHT - 24) / 2$$

(ii) For a tank with an MRHT greater than 72 hours,

$$OWTT = MRHT - 48$$

(3) Each cargo tank motor vehicle used to transport a flammable cryogenic liquid must be examined after each shipment to determine its actual holding time. The record required by §177.840(h) of this subchapter may be used for this determination. If the examination indicates that the actual holding time of the cargo tank, after adjustment to reflect an average ambient temperature of 85 °F, is less than 90 percent of the marked rated holding time (MRHT) for the cryogenic liquid marked on the specification plate or adjacent thereto (see §178.338–18(b) of this subchapter), the tank may not be refilled with any flammable cryogenic liquid until it is restored to its marked rated holding time value or it is remarked with the actual marked rated holding time determined by this examination. If the name of the flammable cryogenic liquid that was transported and its marked rated holding time is not displayed on or adjacent to the specification plate, this requirement may be met by deriving the MRHT of the cargo tank for that flammable cryogenic liquid and comparing that derived MRHT with the actual holding time after adjustment.

[Amdt. 173–166, 48 FR 27696, June 16, 1983]

EDITORIAL NOTE: For FEDERAL REGISTER citations affecting §173.318, see the List of CFR Sections Affected, which appears in the Finding Aids section of the printed volume and at *www.fdsys.gov*.

§ 173.319 Cryogenic liquids in tank cars.

(a) *General requirements.* (1) A tank car containing a flammable cryogenic liquid may not be shipped unless it was

ED_001691B_00009240

loaded by, or with the consent of, the owner of the tank car.

(2) The amount of flammable cryogenic liquid loaded into a tank car must be determined, either by direct measurement or by calculation based on weight, to verify that the tank has not been filled to a level in excess of the limits specified in paragraph (d)(2) of this section. The weight of any flammable cryogenic liquid loaded, except hydrogen, must be checked by use of scales after disconnecting the loading line.

(3) The shipper must notify the Federal Railroad Administration whenever a tank car containing any flammable cryogenic liquid is not received by the consignee within 20 days from the date of shipment. Notification to the Federal Railroad Administration may be made by email to *HMassist@dot.gov* or telephone call to (202) 493–6245.

(4) A tank car may not be loaded with any flammable cryogenic liquid:

(i) That may combine chemically with any residue in the tank to produce an unsafe condition,

(ii) That is colder than the design service temperature of the tank,

(iii) If the average daily pressure rise in the tank exceeded 3 psig during the prior shipment,

(iv) Unless it is marked with the name of contents, in accordance with § 172.330 of this subchapter.

(b) When a tank car containing a flammable cryogenic liquid is offered for transportation:

(1) At least 0.5 percent outage must be provided below the inlet of the pressure relief or pressure control valve at the start-to-discharge pressure setting of the valve, with the tank car in a level attitude, and

(2) The absolute pressure in the annular space must be less than 75 microns of mercury.

(c) *Temperature.* A flammable cryogenic liquid must be loaded into a tank car at such a temperature that the average daily pressure rise during transportation will not exceed 3 psig (see paragraph (a)(4)(iii) of this section).

(d) A Class DOT-113 tank car is authorized for the shipment of the following cryogenic liquids subject to the following additional requirements:

(1) For purposes of this section, ''filling density'' is defined as the percent ratio of the weight of lading in the tank to the weight of water that the tank will hold at the design service temperature (one pound of water = 27.737 cubic inches at 60 °F., or one gallon of water = 231 cubic inches at 60 °F. and weighs 8.32828 pounds).

(2) *Ethylene, and hydrogen (minimum 95 percent parahydrogen), cryogenic liquids* must be loaded and shipped in accordance with the following table:

PRESSURE CONTROL VALVE SETTING OR RELIEF VALVE SETTING

Maximum start-to-discharge pressure (psig)	Maximum permitted filling density (percent by weight)			
	Ethylene	Ethylene	Ethlyene	Hydrogen
17				6.60.
45	52.8.			
75		51.1	51.1.	
Maximum pressure when offered for transportation.	10 psig	10 psig	20 psig.	
Design service temperature	Minus 260 °F	Minus 260 °F	Minus 155 °F	Minus 423 °F.
Specification (see § 180.507(b)(3) of this subchapter).	113D60W 113C60W	113C120W	113D120W	113A175W. 113A60W.

(e) *Special requirements for class DOT 113 tank cars*—(1) A class DOT-113 tank car need not be periodically pressure tested; however, each shipment must be monitored to determine the average daily pressure rise in the tank car. If the average daily pressure rise during any shipment exceeds 0.2 Bar (3 psig) per day, the tank must be tested for thermal integrity prior to any subsequent shipment.

(2) *Thermal integrity test.* When required by paragraph (e)(1) of this section, either of the following thermal integrity tests may be used:

(i) *Pressure rise test.* The pressure rise in the tank may not exceed 0.34 Bar (5 psig) in 24 hours. When the pressure

ED_001691B_00009240

rise test is performed, the absolute pressure in the annular space of the loaded tank car may not exceed 75 microns of mercury at the beginning of the test and may not increase more than 25 microns during the 24-hour period; or

(ii) *Calculated heat transfer rate test.* The insulation system must be performance tested as prescribed in §179.400–4 of this subchapter. When the calculated heat transfer rate test is performed, the absolute pressure in the annular space of the loaded tank car may not exceed 75 microns of mercury at the beginning of the test and may not increase more than 25 microns during the 24-hour period. The calculated heat transfer rate in 24 hours may not exceed:

(A) 120 percent of the appropriate standard heat transfer rate specified in §179.401–1 of this subchapter, for DOT-113A60W and DOT-113C120W tank cars;

(B) 122.808 joules (0.1164 Btu/day/lb.) of inner tank car water capacity, for DOT-113A175W tank cars;

(C) 345.215 joules (0.3272 Btu/day/lb.) of inner tank car water capacity, for DOT-113C60W and 113D60W tank cars; or

(D) 500.09 joules (0.4740 Btu/day/lb.) of inner tank car water capacity, for DOT-113D120W tank cars.

(3) A tank car that fails a test prescribed in paragraph (e)(2) of this section must be removed from hazardous materials service. A tank car removed from hazardous materials service because it failed a test prescribed in paragraph (e)(2) of this section may not be used to transport a hazardous material unless the tank car conforms to all applicable requirements of this subchapter.

(4) Each rupture disc must be replaced every 12 months, and the replacement date must be marked on the car near the pressure relief valve information.

(5) Pressure relief valves and alternate pressure relief valves must be tested every five years. The start-to-discharge pressure and vapor tight pressure requirements for the pressure relief valves must be as specified in §179.401–1 of this subchapter. The alternate pressure relief device values specified in §179.401–1 of this subchapter for a DOT-113C120W tank car apply to a DOT-113D120W tank car.

(49 U.S.C. 1803, 1804, 1808; 49 CFR 1.53, app. A to part 1)

[Amdt. 173–166, 48 FR 27698, June 16, 1983, as amended by Amdt. 173–245, Sept. 21, 1995; 65 FR 58630, Sept. 29, 2000; 66 FR 45184, 45379, 45383, Aug. 28, 2001; 70 FR 34076, June 13, 2005]

§ 173.320 Cryogenic liquids; exceptions.

(a) Atmospheric gases and helium, cryogenic liquids, in Dewar flasks, insulated cylinders, insulated portable tanks, insulated cargo tanks, and insulated tank cars, designed and constructed so that the pressure in such packagings will not exceed 25.3 psig under ambient temperature conditions during transportation are not subject to the requirements of this subchapter when transported by motor vehicle or railcar except as specified in paragraphs (a)(1), (a)(2), and (a)(3) of this section.

(1) Sections 171.15 and 171.16 of this subchapter pertaining to the reporting of incidents, not including a release that is the result of venting through a pressure control valve, or the neck of the Dewar flask.

(2) Subparts A, B, C, D, G and H of part 172, (§§174.24 for rail and 177.817 for highway) and in addition, part 172 in its entirety for oxygen.

(3) Subparts A and B of part 173, and §§174.1 and 177.800, 177.804, and 177.823 of this subchapter.

(b) The requirements of this subchapter do not apply to atmospheric gases and helium:

(1) During loading and unloading operations (pressure rises may exceed 25.3 psig); or

(2) When used in operation of a process system; such as a refrigeration system (pressure may exceed 25.3 psig).

(c) For transportation aboard aircraft, see the ICAO Technical Instructions (IBR, see §171.7 of this subchapter), Packing Instruction 202 and the packaging specifications in part 6, chapter 5.

[Amdt. 173–201, 52 FR 13043, Apr. 20, 1987, as amended at 62 FR 51561, Oct. 1, 1997; 66 FR 33436, June 21, 2001; 67 FR 61014, Sept. 27, 2002; 68 FR 48570, Aug. 14, 2003; 68 FR 75746, Dec. 31, 2003]

ED_001691B_00009240

§ 173.321 Ethylamine.

Ethylamine must be packaged as follows:

(a) In 1A1 drums which meet Packing Group I performance level requirements.

(b) In specification cylinders as prescribed for any compressed gas except acetylene.

[Amdt. 173–224, 55 FR 52667, Dec. 21, 1990]

§ 173.322 Ethyl chloride.

Ethyl chloride must be packaged in any of the following single or combination non-bulk packagings which meet Packing Group I performance level requirements:

(a) In 4C1, 4C2, 4D or 4F wooden boxes with glass, earthenware, or metal inner receptacles not over 500 g (17.6 ounces) capacity each;

(b) In 4G fiberboard boxes with glass, earthenware, or metal inner receptacles not over 500 g (17.6 ounces) capacity each. Outer packagings may not exceed 30 kg (66 pounds) gross weight;

(c) In 1A1 drums of not over 100 L (26 gallons) capacity each; or

(d) In specification cylinders as prescribed for any compressed gas except acetylene. Cylinders made of aluminum alloy are not authorized.

(e) In capsules under the following conditions:

(1) The mass of gas must not exceed 150 g (5.30 ounces) per capsule;

(2) The capsule must be free of faults liable to impair its strength;

(3) The leakproofness integrity of the closure must be maintained by a secondary means (*e.g.*, cap, crown, seal, binding, *etc.*) capable of preventing any leakage of the closure while in transportation; and

(4) The capsules must be placed in a strong outer packaging suitable for the contents and may not exceed a gross mass of 75 kg (165 pounds).

[Amdt. 173–224, 55 FR 52667, Dec. 21, 1990, as amended at 74 FR 2266, Jan. 14, 2009; 76 FR 3381, Jan. 19, 2011]

§ 173.323 Ethylene oxide.

(a) For packaging ethylene oxide in non-bulk packagings, silver mercury or any of its alloys or copper may not be used in any part of a packaging, valve, or other packaging appurtenance if that part, during normal conditions of transportation, may come in contact with ethylene oxide liquid or vapor. Copper alloys may be used only where gas mixtures do not contain free acetylene at any concentration that will form copper acetylene. All packaging and gaskets must be constructed of materials which are compatible with ethylene oxide and do not lower the auto-ignition temperature of ethylene oxide.

(b) Ethylene oxide must be packaged in one of the following:

(1) In hermetically sealed glass or metal inner packagings suitably cushioned in an outer package authorized by § 173.201(b). The maximum quantity permitted in any glass inner packaging is 100 g (3.5 ounces), and the maximum quantity permitted in any metal inner packaging is 340 g (12 ounces). After filling, each inner packaging shall be determined to be leak-tight by placing the inner packaging in a hot water bath at a temperature, and for a period of time, sufficient to ensure that an internal pressure equal to the vapor pressure of ethylene oxide at 55 °C is achieved. The total quantity in any outer packaging shall not exceed 100 g (3.5 ounces), and the total quantity in any outer packaging containing only metal inner packagings shall not exceed 2.5 kg (5.5 pounds). Each completed package must be capable of passing all Packing Group I performance tests.

(2) In specification cylinders or UN pressure receptacles, as authorized for any compressed gas except acetylene. Pressurizing valves and insulation are required for cylinders over 4 L (1 gallon) capacity. Eductor tubes must be provided for cylinders over 19 L (5 gallons) capacity. Cylinders must be seamless or welded steel (not brazed) with a nominal capacity of no more than 115 L (30 gallons) and may not be liquid full below 82 °C (180 °F). Before each refilling, each cylinder must be tested for leakage at no less than 103.4 kPa (15 psig) pressure. In addition, each cylinder must be equipped with a fusible type relief device with yield temperature of 69 °C to 77 °C (157 °F to

ED_001691B_00009240

170 °F). The capacity of the relief device and the effectiveness of the insulation must be such that the charged cylinder will not explode when tested by the method described in CGA Pamphlet C–14 or other equivalent method.

(3) In 1A1 steel drums of no more than 231 L (61 gallons) and meeting Packing Group I performance standards. The drum must be lagged of all welded construction with the inner shell having a minimum thickness of 1.7 mm (0.068 inches) and the outer shell having a minimum thickness of 2.4 mm (0.095 inches). Drums must be capable of withstanding a hydrostatic test pressure of 690 kPa (100 psig). Lagging must be of sufficient thickness so that the drum, when filled with ethylene oxide and equipped with the required pressure relief device, will not rupture when exposed to fire. The drum may not be liquid full below 85 °C (185 °F), and must be marked "THIS END UP" on the top head. Before each refilling, each drum must be tested for leakage at no less than 103 kPa (15 psig) pressure. Each drum must be equipped with a fusible type relief device with yield temperature of 69 °C to 77 °C (157 °F to 170 °F), and the capacity of the relief device must be such that the filled drum is capable of passing, without rupture, the test method described in CGA Pamphlet C–14 or other equivalent method.

(c) When §172.101 of this subchapter specifies that a hazardous material be packaged under this section, only the following bulk packagings are authorized, subject to the requirements of subparts A and B of this part, the special provisions specified in column 7 of the §172.101 table, and paragraphs (d) through (j) of this section:

(1) *Tank cars.* Class DOT 105 tank cars:

(i) Each tank car built before March 16, 2009 must have a tank test pressure of at least 20.7 Bar (300 psig); and

(ii) Except as provided in §173.314(d), tank cars built on or after March 16, 2009 used for the transportation of ethylene oxide must meet the applicable authorized tank car specification listed in the table in §173.314(c).

(2) *Cargo tanks.* Specification MC 330 and MC 331 cargo tank motor vehicles.

(3) *Portable tanks.* DOT 51 portable tanks.

(d) The pressure relief devices must be set to function at 517 kPa (75 psig). Portable tanks fitted with non-reclosing devices made and in use prior to December 31, 1987, may continue to be used in ethylene oxide service.

(e) In determining outage, consideration must be given to the lading temperature and solubility of inert gas padding in ethylene oxide as well as the partial pressure exerted by the gas padding.

(f) Each tank, loaded or empty, must be padded with dry nitrogen or other suitable inert gas of sufficient quantity to render the vapor space of the tank nonflammable up to 41 °C (105 °F). The gas used for padding must be free of impurities which may cause the ethylene oxide to polymerize, decompose or undergo other violent chemical reaction.

(g) Copper, silver, mercury, magnesium or their alloys may not be used in any part of the tank or appurtenances that are normally in contact with the lading.

(h) Neoprene, natural rubber and asbestos gaskets are prohibited. All packing and gaskets must be made of materials which do not react with or lower the autoignition temperature of the lading.

(i) Each tank must be insulated with cork (at least 10 cm (4 inches) thick), or mineral wool, fiberglass or other suitable insulation material of sufficient thickness so that the thermal conductance at 16 °C (60 °F) is not more than 0.075 Btu per hour per square foot per degree F. temperature differential. Portable tanks made and in use prior to December 31, 1987 equipped with fusible plugs instead of a pressure relief valve or rupture disc, must have sufficient insulation so that the tank as filled for shipment will not rupture in a fire. The insulation on portable tanks or cargo tank motor vehicles must be protected with a steel jacket at least 2.54 mm (0.100 inch) thick, or as required by the specification.

ED_001691B_00009240

(j) Tank car tanks built after December 30, 1971 must be equipped with a thermometer well.

[Amdt. 173–224, 55 FR 52667, Dec. 21, 1990, as amended at 56 FR 66279, Dec. 20, 1991; Amdt. 173–236, 58 FR 50237, Sept. 24, 1993; Amdt. 173–234, 58 FR 51532, Oct. 1, 1993; Amdt. 173–145, 60 FR 49076, Sept. 21, 1995; 66 FR 45380, 45383, Aug. 28, 2001; 68 FR 75746, Dec. 31, 2003; 69 FR 76178, Dec. 20, 2004; 71 FR 33884, June 12, 2006; 74 FR 1801, Jan. 13, 2009]

§ 173.334 Organic phosphates mixed with compressed gas.

Hexaethyl tetraphosphate, parathion, tetraethyl dithio pyrophosphate, tetraethyl pyrophosphate, or other Division 6.1 organic phosphates (including a compound or mixture), may be mixed with a non-flammable compressed gas. This mixture may not contain more than 20 percent by weight of organic phosphate and must be packaged in DOT 3A240, 3AA240, 3B240, 4B240, 4BA240, 4BW240 or UN cylinders meeting all of the following requirements:

(a) Each cylinder may be filled with not more than 5 kg (11.0 lb) of the mixture, to a maximum filling density of not more than 80 percent of the water capacity.

(b) No cylinder may be equipped with an education tube or a fusible plug.

(c) No cylinder may be equipped with any valve unless the valve is a type approved by the Associate Administrator.

(d) Cylinders must be overpacked in a box, crate, or other strong outer packaging conforming to the requirements of § 173.25 and arranged to protect each valve or other closing device from damage. Except as provided in paragraph (e) of this section, no more than four cylinders may be packed in a strong outer packaging. Each strong outer packaging with its closing device protection must be sufficiently strong to protect all parts of each cylinder from deformation or leakage if the completed package is dropped 1.8 m (6 feet) onto a non-yielding surface, such as concrete or steel, impacting at the packaging's weakest point.

(e) Cylinders may be packed in strong wooden boxes with valves or other closing devices protected from damage, with not more than twelve cylinders in one outside wooden box. An outer fiberboard box may be used when not more than four such cylinders are to be shipped in one packaging. Valves must be adequately protected. Box and valve protection must be of sufficient strength to protect all parts of inner packagings and valves from deformation or breakage resulting from a drop of at least 1.8 m (6 feet) onto a non-yielding surface, such as concrete or steel, impacting at the weakest point.

[67 FR 51651, Aug. 8, 2002, as amended at 71 FR 54395, Sept. 14, 2006; 75 FR 5395, Feb. 2, 2010]

§ 173.335 Chemical under pressure n.o.s.

(a) *General requirements.* A cylinder filled with a chemical under pressure must be offered for transportation in accordance with the requirements of this section and § 172.301. In addition, a DOT specification cylinder must meet the requirements in §§ 173.301a, 173.302, 173.302a, and 173.305, as applicable. UN pressure receptacles must meet the requirements in §§ 173.301b and 173.302b, as applicable. Where more than one section applies to a cylinder, the most restrictive requirements must be followed.

(b) *Filling limits.* Cylinders must be filled so that at 50 °C (122 °F) the non-gaseous phase does not exceed 95% of their water capacity and they are not completely filled at 60 °C (140 °F). When filled, the internal pressure at 65 °C (149 °F) must not exceed the test pressure of the cylinder. The vapor pressures and volumetric expansion of all substances in the cylinders must be taken into account.

(c) *Minimum service pressure.* The minimum service pressure must be in accordance with the design specifications of part 178 of this subchapter for the propellant. In any case the minimum test pressure must not be less than 20 bar.

(d) *Periodic inspection.* The maximum requalification test period for cylinders transporting chemical under pressure n.o.s. is 5 years.

[78 FR 1092, Jan. 7, 2013]

§ 173.336 Nitrogen dioxide, liquefied, or dinitrogen tetroxide, liquefied.

(a) Nitrogen dioxide, liquefied, or dinitrogen tetroxide, liquefied, must be packaged in specification or UN cylinders as prescribed in § 173.192, except

ED_001691B_00009240

valves are not authorized. UN tubes and MEGCs are not authorized for use. Cylinders must be equipped with a stainless steel valve and valve seat that will not deteriorate in contact with nitrogen dioxide. Each valve opening must be closed by a solid metal plug with tapered thread properly luted to prevent leakage. Transportation in DOT 3AL cylinders is authorized only by highway and rail.

(b) Each UN pressure receptacle must be cleaned in accordance with the requirements of ISO 11621 (IBR, see § 171.7 of this subchapter). Each DOT specification cylinder must be cleaned according to the requirements of GSA Federal Specification RR–C–901D, paragraphs 3.3.1 and 3.3.2 (IBR, see § 171.7 of this subchapter). Cleaning agents equivalent to those specified in RR–C–901D may be used; however, any cleaning agent must not be capable of reacting with oxygen. One cylinder selected at random from a group of 200 or fewer and cleaned at the same time must be tested for oil contamination in accordance with Specification RR–C–901D, paragraph 4.3.2 (IBR, see § 171.7 of this subchapter) and meet the standard of cleanliness specified therein.

[71 FR 33885, June 12, 2006]

§ 173.337 Nitric oxide.

(a) Nitric oxide must be packaged in cylinders conforming to the requirements of § 173.40 and as follows:

(1) *DOT specification cylinder.* In a DOT 3A1800, 3AA1800, 3E1800, or 3AL1800 cylinder. A DOT specification cylinder must be charged to a pressure of not more than 5,170 kPa (750 psi) at 21 °C (70 °F). Transportation of nitric oxide in a DOT 3AL is cylinder is authorized only by highway and rail.

(2) *UN cylinder.* In a UN cylinder with a minimum test pressure of 200 bar. The maximum working pressure of the cylinder must not exceed 50 bar. The pressure in the cylinder at 65 °C (149 °F) may not exceed the test pressure. The use of UN tubes and MEGCs is not authorized.

(3) *Valves.* Cylinders must be equipped with a stainless steel valve and valve seat that will not deteriorate in contact with nitric oxide. Cylinders or valves may not be equipped with pressure relief devices of any type.

(b) Each UN cylinder must be cleaned in accordance with the requirements of ISO 11621 (IBR, see § 171.7 of this subchapter). Each DOT specification cylinder must be cleaned in compliance with the requirements of GSA Federal Specification RR–C–901D, paragraphs 3.3.1 and 3.3.2 (IBR, see § 171.7 of this subchapter). Cleaning agents equivalent to those specified in Federal Specification RR–C–901D may be used; however, any cleaning agent must not be capable of reacting with oxygen. One cylinder selected at random from a group of 200 or fewer and cleaned at the same time must be tested for oil contamination in accordance with Federal Specification RR–C–901D paragraph 4.3.2 and meet the standard of cleanliness specified therein.

[71 FR 33885, June 12, 2006]

§ 173.338 Tungsten hexafluoride.

(a) Tungsten hexafluoride must be packaged in specification 3A, 3AA, 3BN, or 3E (§§ 178.36, 178.37, 178.39, 178.42 of this subchapter) cylinders. Cylinders must be equipped with a valve protection cap or be packed in a strong outer packaging meeting the provisions of § 173.40. Outlets of any valves must be capped or plugged. As an alternative, the cylinder opening may be closed by the use of a metal plug. Specification 3E cylinders must be shipped in an overpack that meets the provisions of § 173.40.

(b) In place of the volumetric expansion test, DOT 3BN cylinders used in exclusive service may be given a complete external visual inspection in conformance with part 180, subpart C, of this subchapter, at the time such periodic requalification becomes due. Cylinders that undergo a complete external visual inspection, in place of the volumetric expansion test, must be condemned if removed from tungsten hexafluoride service.

[74 FR 16143, Apr. 9, 2009, as amended at 75 FR 5395, Feb. 2, 2010]

§ 173.340 Tear gas devices.

(a) Packagings for tear gas devices must be approved prior to initial transportation by the Associate Administrator.

ED_001691B_00009240

(b) Tear gas devices may not be assembled with, or packed in the same packaging with, mechanically- or manually-operated firing, igniting, bursting, or other functioning elements unless of a type and design which has been approved by the Associate Administrator.

(c) Tear gas grenades, tear gas candles, and similar devices must be packaged in one of the following packagings conforming to the requirements of part 178 of this subchapter at the Packing Group II performance level:

(1) In UN 4A, 4B, or 4N metal boxes or UN 4C1, 4C2, 4D, or 4F metal-strapped wooden boxes. Functioning elements not assembled in grenades or devices must be in a separate compartment of these boxes, or in inner or separate outer boxes, UN 4C1, 4C2, 4D, or 4F, and must be packed and cushioned so that they may not come in contact with each other or with the walls of the box during transportation. Not more than 50 tear gas devices and 50 functioning elements must be packed in one box, and the gross weight of the outer box may not exceed 35 kg (77 pounds).

(2) In UN 1A2, 1B2, 1N2 or 1H2 drums. Functioning elements must be packed in a separate inner packaging or compartment. Not more than 24 tear gas devices and 24 functioning elements must be packed in one outer drum, and the gross weight of the drum may not exceed 35 kg (77 pounds).

(3) In a UN 4G fiberboard box with inside tear gas devices meeting Specifications 2P or 2Q. Each inside packaging must be placed in fiberboard tubes fitted with metal ends or a fiber box with suitable padding. Not more than 30 inner packagings must be packed in one outer box, and the gross weight of the outer box may not exceed 16 kg (35 pounds).

(4) In other packagings of a type or design which has been approved by the Associate Administrator.

(d) Tear gas devices may be shipped completely assembled when offered by or consigned to the U.S. Department of Defense, provided the functioning elements are packed so that they cannot accidentally function. Outer packagings must be UN 4A, 4B, or 4N metal boxes or UN 4C1, 4C2, 4D, or 4F metal-strapped wooden boxes.

[Amdt. 173–224, 55 FR 52669, Dec. 21, 1990, as amended at 66 FR 45379, Aug. 28, 2001; 78 FR 1092, Jan. 7, 2013]

Subpart H [Reserved]

Subpart I—Class 7 (Radioactive) Materials

SOURCE: Amdt. 173–244, 60 FR 50307, Sept. 28, 1995, unless otherwise noted.

§ 173.401 Scope.

(a) This subpart sets forth requirements for the packaging and transportation of Class 7 (radioactive) materials by offerors and carriers subject to this subchapter. The requirements prescribed in this subpart are in addition to, not in place of, other requirements set forth in this subchapter for Class 7 (radioactive) materials and those of the Nuclear Regulatory Commission in 10 CFR part 71.

(b) This subpart does not apply to:

(1) Class 7 (radioactive) materials produced, used, transported, or stored within an establishment other than during the course of transportation, including storage in transportation.

(2) Class 7 (radioactive) materials that have been implanted or incorporated into, and are still in, a person or live animal for diagnosis or treatment.

(3) Class 7 (radioactive) material that is an integral part of the means of transport.

(4) Natural material and ores containing naturally occurring radionuclides which are either in their natural state, or which have only been processed for purposes other than for extraction of the radionuclides, and which are not intended to be processed for the use of these radionuclides, provided the activity concentration of the material does not exceed 10 times the exempt material activity concentration values specified in § 173.436, or determined in accordance with the requirements of § 173.433.

(5) Non-radioactive solid objects with radioactive substances present on any surfaces in quantities not exceeding

ED_001691B_00009240

the threshold limits set forth in the definition of contamination in § 173.403.

[Amdt. 173–244, 60 FR 50307, Sept. 28, 1995, as amended at 69 FR 3670, Jan. 26, 2004; 79 FR 40610, July 11, 2014]

§ 173.403 Definitions.

For purposes of this subpart—

A_1 means the maximum activity of special form Class 7 (radioactive) material permitted in a Type A package. This value is either listed in § 173.435 or may be derived in accordance with the procedures prescribed in § 173.433.

A_2 means the maximum activity of Class 7 (radioactive) material, other than special form material, LSA material, and SCO, permitted in a Type A package. This value is either listed in § 173.435 or may be derived in accordance with the procedures prescribed in § 173.433.

Class 7 (radioactive) material See the definition of *Radioactive material* in this section.

Closed transport vehicle means a transport vehicle or conveyance equipped with a securely attached exterior enclosure that during normal transportation restricts the access of unauthorized persons to the cargo space containing the Class 7 (radioactive) materials. The enclosure may be either temporary or permanent, and in the case of packaged materials may be of the "see-through" type, and must limit access from top, sides, and bottom.

Consignment means a package or group of packages or load of radioactive material offered by a person for transport in the same shipment.

Containment system means the assembly of components of the packaging intended to retain the Class 7 (radioactive) material during transport.

Contamination means the presence of a radioactive substance on a surface in quantities in excess of 0.4 Bq/cm^2 for beta and gamma emitters and low toxicity alpha emitters or 0.04 Bq/cm^2 for all other alpha emitters. There are two categories of contamination:

(1) Fixed contamination means contamination that cannot be removed from a surface during normal conditions of transport.

(2) Non-fixed contamination means contamination that can be removed from a surface during normal conditions of transport.

Conveyance means:

(1) For transport by public highway or rail: any transport vehicle or large freight container;

(2) For transport by water: any vessel, or any hold, compartment, or defined deck area of a vessel including any transport vehicle on board the vessel; and

(3) For transport by aircraft, any aircraft.

Criticality Safety Index (CSI) means a number (rounded up to the next tenth) which is used to provide control over the accumulation of packages, overpacks or freight containers containing fissile material. The CSI for a package containing fissile material is determined in accordance with the instructions provided in 10 CFR 71.22, 71.23, and 71.59. The CSI for an overpack, freight container, consignment or conveyance containing fissile material packages is the arithmetic sum of the criticality safety indices of all the fissile material packages contained within the overpack, freight container, consignment or conveyance.

Design means the description of a special form Class 7 (radioactive) material, a package, packaging, or LSA-III, that enables those items to be fully identified. The description may include specifications, engineering drawings, reports showing compliance with regulatory requirements, and other relevant documentation.

Deuterium means, for the purposes of § 173.453, deuterium and any deuterium compound, including heavy water, in which the ratio of deuterium atoms to hydrogen atoms exceeds 1:5000.

Exclusive use means sole use by a single consignor of a conveyance for which all initial, intermediate, and final loading and unloading and shipment are carried out in accordance with the direction of the consignor or consignee where required by this subchapter. The consignor and the carrier must ensure that any loading or unloading is performed by personnel having radiological training and resources appropriate for safe handling of the

ED_001691B_00009240

consignment. The consignor must provide to the initial carrier specific written instructions for maintenance of exclusive use shipment controls, including the vehicle survey requirement of §173.443(c) as applicable, and include these instructions with the shipping paper information provided to the carrier by the consignor.

Exemption value means either an exempt material activity concentration or an exempt consignment activity limit listed in the table in §173.436, or determined according to the procedures described in §173.433, and used to determine whether a given physically radioactive material is sufficiently radioactive to be subject to the HMR (see definition of radioactive material). An exemption value is different from an exemption, as specified under the definition for special permit in §171.8 of this subchapter.

Fissile material means plutonium-239, plutonium-241, uranium-233, uranium-235, or any combination of these radionuclides. Fissile material means the fissile nuclides themselves, not material containing fissile nuclides, but does not include: Unirradiated natural uranium or depleted uranium; and natural uranium or depleted uranium that has been irradiated in thermal reactors only. Certain exceptions for fissile materials are provided in §173.453.

Freight container means a reusable container having a volume of 1.81 cubic meters (64 cubic feet) or more, designed and constructed to permit it being lifted with its contents intact and intended primarily for containment of packages in unit form during transportation. A "small freight container" is one which has an internal volume of not more than 3.0 cubic meters (106 cubic feet). All other freight containers are designated as "large freight containers."

Graphite means, for the purposes of §173.453, graphite with a boron equivalent content less than 5 parts per million and density greater than 1.5 grams per cubic centimeter.

Highway route controlled quantity means a quantity within a single package which exceeds:

(1) 3,000 times the A_1 value of the radionuclides as specified in §173.435 for special form Class 7 (radioactive) material;

(2) 3,000 times the A_2 value of the radionuclides as specified in §173.435 for normal form Class 7 (radioactive) material; or

(3) 1,000 TBq (27,000 Ci), whichever is least.

Limited quantity of Class 7 (radioactive) material means a quantity of Class 7 (radioactive) material not exceeding the material's package limits specified in §173.425 and conforming with requirements specified in §173.421.

Low Specific Activity (LSA) material means Class 7 (radioactive) material with limited specific activity which is not fissile material or is excepted under §173.453, and which satisfies the descriptions and limits set forth below. Shielding material surrounding the LSA material may not be considered in determining the estimated average specific activity of the LSA material. LSA material must be in one of three groups:

(1) LSA–I:

(i) Uranium and thorium ores, concentrates of uranium and thorium ores, and other ores containing naturally occurring radionuclides which are intended to be processed for the use of these radionuclides; or

(ii) Natural uranium, depleted uranium, natural thorium or their compounds or mixtures, provided they are unirradiated and in solid or liquid form; or

(iii) Radioactive material for which the A_2 value is unlimited; or

(iv) Other radioactive material in which the activity is distributed throughout and the estimated average specific activity does not exceed 30 times the values for activity concentration specified in §173.436 or calculated in accordance with §173.433, or 30 times the default values listed in Table 8 of §173.433.

(2) LSA–II:

(i) Water with tritium concentration up to 0.8 TBq/L (20.0 Ci/L); or

(ii) Other radioactive material in which the activity is distributed throughout and the average specific activity does not exceed 10^{-4} A_2/g for solids and gases, and 10^{-5} A_2/g for liquids.

(3) LSA–III. Solids (*e.g.*, consolidated wastes, activated materials), excluding

ED_001691B_00009240

powders, that meet the requirements of § 173.468 and in which:

(i) The radioactive material is distributed throughout a solid or a collection of solid objects, or is essentially uniformly distributed in a solid compact binding agent (such as concrete, bitumen, ceramic, etc.);

(ii) The radioactive material is relatively insoluble, or it is intrinsically contained in a relatively insoluble material, so that, even under loss of packaging, the loss of Class 7 (radioactive) material per package by leaching when placed in water for seven days would not exceed 0.1 A_2; and

(iii) The estimated average specific activity of the solid, excluding any shielding material, does not exceed 2×10^{-3} A_2/g.

Low toxicity alpha emitters means natural uranium; depleted uranium; natural thorium; uranium-235 or uranium-238; thorium-232; thorium-228 and thorium-230 when contained in ores or physical and chemical concentrates; and alpha emitters with a half-life of less than 10 days.

Maximum normal operating pressure means the maximum gauge pressure that would develop in a containment system during a period of one year, in the absence of venting or cooling, under the heat conditions specified in 10 CFR 71.71(c)(1).

Multilateral approval means approval of a package design or shipment by the relevant Competent Authority of the country of origin and of each country through or into which the package or shipment is to be transported. This definition does not include approval from a country over which Class 7 (radioactive) materials are carried in aircraft, if there is no scheduled stop in that country.

Natural thorium means thorium with the naturally occurring distribution of thorium isotopes (essentially 100 percent by weight of thorium-232).

Normal form Class 7 (radioactive) material means Class 7 (radioactive) which has not been demonstrated to qualify as "special form Class 7 (radioactive) material."

Package means the packaging together with its radioactive contents as presented for transport.

(1) "Excepted package" means a packaging together with its excepted Class 7 (radioactive) materials as specified in §§ 173.421–173.426 and 173.428.

(2) "Industrial package" means a packaging that, together with its low specific activity (LSA) material or surface contaminated object (SCO) contents, meets the requirements of §§ 173.410 and 173.411. Industrial packages are categorized in § 173.411 as either:

(i) "Industrial package Type 1 (Type IP–1);

(ii) "Industrial package Type 2 (Type IP–2); or

(iii) "Industrial package Type 3 (Type IP–3).

(3) "Type A package" means a packaging that, together with its radioactive contents limited to A_1 or A_2 as appropriate, meets the requirements of §§ 173.410 and 173.412 and is designed to retain the integrity of containment and shielding required by this part under normal conditions of transport as demonstrated by the tests set forth in § 173.465 or § 173.466, as appropriate. A Type A package does not require Competent Authority approval.

(4) "Type B package" means a packaging designed to transport greater than an A_1 or A_2 quantity of radioactive material that, together with its radioactive contents, is designed to retain the integrity of containment and shielding required by this part when subjected to the normal conditions of transport and hypothetical accident test conditions set forth in 10 CFR part 71.

(i) "Type B(U) package" means a Type B packaging that, together with its radioactive contents, for international shipments requires unilateral approval only of the package design and of any stowage provisions that may be necessary for heat dissipation.

(ii) "Type B(M) package" means a Type B packaging, together with its radioactive contents, that for international shipments requires multilateral approval of the package design, and may require approval of the conditions of shipment. Type B(M) packages are those Type B package designs which have a maximum normal operating pressure of more than 700 kPa/cm^2 (100 lb/in^2) gauge or a relief device

ED_001691B_00009240

which would allow the release of Class 7 (radioactive) material to the environment under the hypothetical accident conditions specified in 10 CFR part 71.

(5) ''Fissile material package'' means a packaging, together with its fissile material contents, which meets the requirements for fissile material packages described in subpart E of 10 CFR 71. A fissile material package may be a Type AF package, a Type B(U)F package, or a Type B(M)F package.

Packaging means, for Class 7 (radioactive) materials, the assembly of components necessary to ensure compliance with the packaging requirements of this subpart. It may consist of one or more receptacles, absorbent materials, spacing structures, thermal insulation, radiation shielding, service equipment for filling, emptying, venting and pressure relief, and devices for cooling or absorbing mechanical shocks. The conveyance, tie-down system, and auxiliary equipment may sometimes be designated as part of the packaging.

Quality assurance means a systematic program of controls and inspections applied by each person involved in the transport of radioactive material which provides confidence that a standard of safety prescribed in this subchapter is achieved in practice.

Radiation level means the radiation dose-equivalent rate expressed in millisieverts per hour or mSv/h (millirems per hour or mrem/h). It consists of the sum of the dose-equivalent rates from all types of ionizing radiation present including alpha, beta, gamma, and neutron radiation. Neutron flux densities may be used to determine neutron radiation levels according to Table 1:

TABLE 1—NEUTRON FLUENCE RATES TO BE REGARDED AS EQUIVALENT TO A RADIATION LEVEL OF 0.01 mSv/h (1mrem/h) [1]

Energy of neutron	Flux density equivalent to 0.01 mSv/h (1 mrem/h) neutrons per square centimeter per second (n/cm²/s)[1]
Thermal (2.5 10E–8) MeV	272.0
1 keV	272.0
10 keV	281.0
100 keV	47.0
500 keV	11.0
1 MeV	7.5
5 MeV	6.4
10 MeV	6.7

[1] Flux densities equivalent for energies between those listed in this table may be obtained by linear interpolation.

Radioactive contents means a Class 7 (radioactive) material, together with any contaminated or activated solids, liquids and gases within the packaging.

Radioactive instrument or article means any manufactured instrument or article such as an instrument, clock, electronic tube or apparatus, or similar instrument or article having Class 7 (radioactive) material in gaseous or nondispersible solid form as a component part.

Radioactive material means any material containing radionuclides where both the activity concentration and the total activity in the consignment exceed the values specified in the table in §173.436 or values derived according to the instructions in §173.433.

Special form Class 7 (radioactive) material means either an indispersible solid radioactive material or a sealed capsule containing radioactive material which satisfies the following conditions:

(1) It is either a single solid piece or a sealed capsule containing radioactive material that can be opened only by destroying the capsule;

(2) The piece or capsule has at least one dimension not less than 5 mm (0.2 in); and

(3) It satisfies the test requirements of §173.469. Special form encapsulations designed in accordance with the requirements of §173.389(g) in effect on June 30, 1983 (see 49 CFR part 173, revised as of October 1, 1982), and constructed prior to July 1, 1985 and special form encapsulations designed in accordance with the requirements of §173.403 in effect on March 31, 1996 (see

ED_001691B_00009240

49 CFR part 173, revised as of October 1, 1995), and constructed prior to April 1, 1997, may continue to be used. Any other special form encapsulation must meet the requirements of this paragraph (3).

Specific activity of a radionuclide means the activity of the radionuclide per unit mass of that nuclide. The specific activity of a material in which the radionuclide is essentially uniformly distributed is the activity per unit mass of the material.

Surface Contaminated Object (SCO) means a solid object which is not itself radioactive but which has radioactive material distributed on its surface. SCO exists in two phases:

(1) SCO-I: A solid object on which:

(i) The non-fixed contamination on the accessible surface averaged over 300 cm^2 (or the area of the surface if less than 300 cm^2) does not exceed 4 Bq/cm^2 (10^{-4} microcurie/cm^2) for beta and gamma and low toxicity alpha emitters, or 0.4 Bq/cm^2 (10^{-5} microcurie/cm^2) for all other alpha emitters;

(ii) The fixed contamination on the accessible surface averaged over 300 cm^2 (or the area of the surface if less than 300 cm^2) does not exceed 4×10^4 Bq/cm^2 (1.0 microcurie/cm^2) for beta and gamma and low toxicity alpha emitters, or 4×10^3 Bq/cm^2 (0.1 microcurie/cm^2) for all other alpha emitters; and

(iii) The non-fixed contamination plus the fixed contamination on the inaccessible surface averaged over 300 cm^2 (or the area of the surface if less than 300 cm^2) does not exceed 4×10^4 Bq/cm^2 (1 microcurie/cm^2) for beta and gamma and low toxicity alpha emitters, or 4×10^3 Bq/cm^2 (0.1 microcurie/cm^2) for all other alpha emitters.

(2) SCO-II: A solid object on which the limits for SCO-I are exceeded and on which:

(i) The non-fixed contamination on the accessible surface averaged over 300 cm^2 (or the area of the surface if less than 300 cm^2) does not exceed 400 Bq/cm^2 (10^{-2} microcurie/cm^2) for beta and gamma and low toxicity alpha emitters, or 40 Bq/cm^2 (10^{-3} microcurie/cm^2) for all other alpha emitters;

(ii) The fixed contamination on the accessible surface averaged over 300 cm^2 (or the area of the surface if less than 300 cm^2) does not exceed 8×10^5 Bq/cm^2 (20 microcurie/cm^2) for beta and gamma and low toxicity alpha emitters, or 8×10^4 Bq/cm^2 (2 microcuries/cm^2) for all other alpha emitters; and

(iii) The non-fixed contamination plus the fixed contamination on the inaccessible surface averaged over 300 cm^2 (or the area of the surface if less than 300 cm^2) does not exceed 8×10^5 Bq/cm^2 (20 microcuries/cm^2) for beta and gamma and low toxicity alpha emitters, or 8×10^4 Bq/cm^2 (2 microcuries/cm^2) for all other alpha emitters.

Transport index (TI) means the dimensionless number (rounded up to the next tenth) placed on the label of a package, to designate the degree of control to be exercised by the carrier during transportation. The transport index is determined by multiplying the maximum radiation level in millisieverts (mSv) per hour at 1 m (3.3 ft) from the external surface of the package by 100 (equivalent to the maximum radiation level in millirem per hour at 1 m (3.3 ft)).

Type A quantity means a quantity of Class 7 (radioactive) material, the aggregate radioactivity which does not exceed A_1 for special form Class 7 (radioactive) material of A_2 for normal form Class 7 (radioactive) material, where A_1 and A_2 values are given in §173.435 or are determined in accordance with §173.433.

Type B quantity means a quantity of material greater than a Type A quantity.

Unilateral approval means approval of a package design solely by the Competent Authority of the country of origin of the design.

Unirradiated thorium means thorium containing not more than 10^{-7} grams uranium-233 per gram of thorium-232.

Unirradiated uranium means uranium containing not more than 2×10^3 Bq of plutonium per gram of uranium-235, not more than 9×10^6 Bq of fission products per gram of uranium-235 and not more than 5×10^{-3} g of uranium-236 per gram of uranium-235.

ED_001691B_00009240

Uranium—natural, depleted or *enriched* means the following:

(1)(i) "Natural uranium" means uranium (which may be chemically separated) containing the naturally occurring distribution of uranium isotopes (approximately 99.28% uranium-238 and 0.72% uranium-235 by mass).

(ii) "Depleted uranium" means uranium containing a lesser mass percentage of uranium-235 than in natural uranium.

(iii) "Enriched uranium" means uranium containing a greater mass percentage of uranium-235 than 0.72%.

(2) For each of these definitions, a very small mass percentage of uranium-234 may be present.

[69 FR 3670, Jan. 26, 2004; 69 FR 55116, Sept. 13, 2004; 69 FR 58843, Oct. 1, 2004; 70 FR 56098, Sept. 23, 2005; 70 FR 73165, Dec. 9, 2005; 79 FR 40610, July 11, 2014; 80 FR 1162, Jan. 8, 2015]

§ 173.410 General design requirements.

In addition to the requirements of subparts A and B of this part, each package used for the shipment of Class 7 (radioactive) materials must be designed so that—

(a) The package can be easily handled and properly secured in or on a conveyance during transport.

(b) Each lifting attachment that is a structural part of the package must be designed with a minimum safety factor of three against yielding when used to lift the package in the intended manner, and it must be designed so that failure of any lifting attachment under excessive load would not impair the ability of the package to meet other requirements of this subpart. Any other structural part of the package which could be used to lift the package must be capable of being rendered inoperable for lifting the package during transport or must be designed with strength equivalent to that required for lifting attachments.

(c) The external surface, as far as practicable, will be free from protruding features and will be easily decontaminated.

(d) The outer layer of packaging will avoid, as far as practicable, pockets or crevices where water might collect.

(e) Each feature that is added to the package will not reduce the safety of the package.

(f) The package will be capable of withstanding the effects of any acceleration, vibration or vibration resonance that may arise under normal conditions of transport without any deterioration in the effectiveness of the closing devices on the various receptacles or in the integrity of the package as a whole and without loosening or unintentionally releasing the nuts, bolts, or other securing devices even after repeated use (see §§ 173.24, 173.24a, and 173.24b).

(g) The materials of construction of the packaging and any components or structure will be physically and chemically compatible with each other and with the package contents. The behavior of the packaging and the package contents under irradiation will be taken into account.

(h) All valves through which the package contents could escape will be protected against unauthorized operation.

(i) For transport by air—

(1) The temperature of the accessible surfaces of the package will not exceed 50 °C (122 °F) at an ambient temperature of 38 °C (100 °F) with no account taken for insulation;

(2) The integrity of containment will not be impaired if the package is exposed to ambient temperatures ranging from −40 °C (−40 °F) to + 55 °C (131 °F); and

(3) A package containing liquid contents must be capable of withstanding, without leakage, an internal pressure that produces a pressure differential of not less than the maximum normal operating pressure plus 95 kPa (13.8 psi).

[Amdt. 173–244, 60 FR 50307, Sept. 28, 1995, as amended by Amdt. 173–244, 61 FR 20750, May 8, 1996; 64 FR 51919, Sept. 27, 1999; 79 FR 40611, July 11, 2014]

§ 173.411 Industrial packages.

(a) *General.* Each industrial package must comply with the requirements of this section which specifies package tests, and record retention applicable to Industrial Package Type 1 (Type IP–1), Industrial Package Type 2 (Type IP–2), and Industrial Package Type 3 (Type IP–3).

(b) *Industrial package certification and tests.* (1) Each Type IP–1 package must

ED_001691B_00009240

meet the general design requirements prescribed in §173.410.

(2) Each Type IP–2 package must meet the general design requirements prescribed in §173.410 and when subjected to the tests specified in §173.465(c) and (d) or evaluated against these tests by any of the methods authorized by §173.461(a), must prevent:

(i) Loss or dispersal of the radioactive contents; and

(ii) A significant increase in the radiation levels recorded or calculated at the external surfaces for the condition before the test.

(3) Each Type IP–3 package must meet the requirements for Type IP–1 and Type IP–2 packages, and must meet the requirements specified in §173.412(a) through (j).

(4) A portable tank may be used as a Type IP–2 or Type IP–3 package provided that:

(i) It meets the requirements for Type IP–1 packages specified in paragraph (b)(1);

(ii) It meets the requirements prescribed in Chapter 6.7 of the United Nations Recommendations on the Transport of Dangerous Goods, (IBR, *see* §171.7 of this subchapter), "Requirements for the Design, Construction, Inspection and Testing of Portable Tanks and Multiple-Element Gas Containers (MEGCs)," or other requirements at least equivalent to those standards;

(iii) It is capable of withstanding a test pressure of 265 kPa (38.4 psia); and

(iv) It is designed so that any additional shielding which is provided must be capable of withstanding the static and dynamic stresses resulting from handling and routine conditions of transport and of preventing more than a 20% increase in the maximum radiation level at any external surface of the portable tanks.

(5) A cargo tank or a tank car may be used as Type IP–2 or Type IP–3 package for transporting LSA–I and LSA–II liquids and gases as prescribed in Table 6 of §173.427, provided that:

(i) It meets the requirements for a Type IP–1 package specified in paragraph (b)(1);

(ii) It is capable of withstanding a test pressure of 265 kPa (38.4 psia); and

(iii) It is designed so that any additional shielding which is provided must be capable of withstanding the static and dynamic stresses resulting from handling and routine conditions of transport and of preventing more than a 20% increase in the maximum radiation level at any external surface of the tanks.

(6) A freight container may be used as Type IP–2 or Type IP–3 packages provided:

(i) The radioactive contents are restricted to solid materials;

(ii) It meets the requirements for a Type IP–1 packages specified in paragraph (b)(1); and

(iii) It meets the standards prescribed in the International Organization for Standardization document ISO 1496–1: "Series 1 Freight Containers—Specifications and Testing—Part 1: General Cargo Containers; excluding dimensions and ratings (IBR, *see* §171.7 of this subchapter). It must be designed such that if subjected to the tests prescribed in that document and the accelerations occurring during routine conditions of transport it would prevent:

(A) Loss or dispersal of the radioactive contents; and

(B) More than a 20% increase in the maximum radiation level at any external surface of the freight containers.

(7) A metal intermediate bulk containers may be used as a Type IP–2 or Type IP–3 package, provided:

(i) It meets the requirements for a Type IP–1 package specified in paragraph (b)(1); and

(ii) It meets the requirements prescribed in Chapter 6.5 of the United Nations Recommendations on the Transport of Dangerous Goods, (IBR, see §171.7 of this subchapter), "Requirements for the Construction and Testing of Intermediate Bulk Containers," for Packing Group I or II, and if subjected to the tests prescribed in that document, but with the drop test conducted in the most damaging orientation, it would prevent:

(A) Loss or dispersal of the radioactive contents; and

(B) More than a 20% increase in the maximum radiation level at any external surface of the intermediate bulk container.

(c) Except for Type IP–1 packages, each offeror of an industrial package must maintain on file for at least two

ED_001691B_00009240

years after the offeror's latest shipment, and must provide to the Associate Administrator on request, complete documentation of tests and an engineering evaluation or comparative data showing that the construction methods, package design, and materials of construction comply with that specification.

[79 FR 40611, July 11, 2014]

§ 173.412 Additional design requirements for Type A packages.

In addition to meeting the general design requirements prescribed in § 173.410, each Type A packaging must be designed so that—

(a) The outside of the packaging incorporates a feature, such as a seal, that is not readily breakable, and that, while intact, is evidence that the package has not been opened. In the case of packages shipped in closed transport vehicles in exclusive use, the cargo compartment, instead of the individual packages, may be sealed.

(b) The smallest external dimension of the package is not less than 10 cm (4 inches).

(c) Containment and shielding is maintained during transportation and storage in a temperature range of −40 °C (−40 °F) to 70 °C (158 °F). Special attention shall be given to liquid contents and to the potential degradation of the packaging materials within the temperature range.

(d) The packaging must include a containment system securely closed by a positive fastening device that cannot be opened unintentionally or by pressure that may arise within the package during normal transport. Special form Class 7 (radioactive) material, as demonstrated in accordance with § 173.469, may be considered as a component of the containment system. If the containment system forms a separate unit of the package, it must be securely closed by a positive fastening device that is independent of any other part of the package.

(e) For each component of the containment system account is taken, where applicable, of radiolytic decomposition of materials and the generation of gas by chemical reaction and radiolysis.

(f) The containment system will retain its radioactive contents under the reduction of ambient pressure to 60 kPa (8.7 psia).

(g) Each valve, other than a pressure relief device, is provided with an enclosure to retain any leakage.

(h) Any radiation shield that encloses a component of the packaging specified as part of the containment system will prevent the unintentional escape of that component from the shield.

(i) Failure of any tie-down attachment that is a structural part of the packaging, under both normal and accident conditions, must not impair the ability of the package to meet other requirements of this subpart.

(j) When evaluated against the performance requirements of this section and the tests specified in § 173.465 or using any of the methods authorized by § 173.461(a), the packaging will prevent—

(1) Loss or dispersal of the radioactive contents; and

(2) A significant increase in the radiation levels recorded or calculated at the external surfaces for the condition before the test.

(k) Each packaging designed for liquids will—

(1) Be designed to provide for ullage to accommodate variations in temperature of the contents, dynamic effects and filling dynamics;

(2) Meet the conditions prescribed in paragraph (j) of this section when subjected to the tests specified in § 173.466 or evaluated against these tests by any of the methods authorized by § 173.461(a); and

(3) Either—

(i) Have sufficient suitable absorbent material to absorb twice the volume of the liquid contents. The absorbent material must be compatible with the package contents and suitably positioned to contact the liquid in the event of leakage; or

(ii) Have a containment system composed of primary inner and secondary outer containment components designed to enclose the liquid contents completely and ensure retention of the liquid within the secondary outer component in the event that the primary inner component leaks.

ED_001691B_00009240

(l) Each package designed for gases, other than tritium not exceeding 40 TBq (1080Ci) or noble gases not exceeding the A_2 value appropriate for the noble gas, will be able to prevent loss or dispersal of contents when the package is subjected to the tests prescribed in § 173.466 or evaluated against these tests by any of the methods authorized by § 173.461(a).

[Amdt. 173–244, 60 FR 50307, Sept. 28, 1995, as amended by 66 FR 45379, Aug. 28, 2001; 68 FR 57633, Oct. 6, 2003; 79 FR 40612, July 11, 2014]

§ 173.413 Requirements for Type B packages.

Except as provided in § 173.416, each Type B(U) or Type B(M) package must be designed and constructed to meet the applicable requirements specified in 10 CFR part 71.

§ 173.415 Authorized Type A packages.

The following packages are authorized for shipment if they do not contain quantities exceeding A_1 or A_2 as appropriate:

(a) DOT Specification 7A (see § 178.350 of this subchapter) Type A general packaging. Until January 1, 2017 each offeror of a Specification 7A package must maintain on file for at least one year after the latest shipment, and shall provide to DOT on request, complete documentation of tests and an engineering evaluation or comparative data showing that the construction methods, packaging design, and materials of construction comply with that specification. After January 1, 2017 each offeror of a Specification 7A package must maintain on file for at least two years after the offeror's latest shipment, and shall provide to DOT on request, one of the following:

(1) A description of the package showing materials of construction, dimensions, weight, closure and closure materials (including gaskets, tape, etc.) of each item of the containment system, shielding and packing materials used in normal transportation, and the following:

(i) If the packaging is subjected to the physical tests of § 173.465, and if applicable, § 173.466, documentation of testing, including date, place of test, signature of testers, a detailed description of each test performed including equipment used, and the damage to each item of the containment system resulting from the tests, or

(ii) For any other demonstration of compliance with tests authorized in § 173.461, a detailed analysis which shows that, for the contents being shipped, the package meets the pertinent design and performance requirements for a DOT 7A Type A specification package.

(2) If the offeror has obtained the packaging from another person who meets the definition of "packaging manufacturer" in § 178.350(c) of this subchapter, a certification from the packaging manufacturer that the package meets all the requirements of § 178.350 for the radioactive contents presented for transport and a copy of documents maintained by the packaging manufacturer that meet the requirements of paragraph (a)(1) of this section.

(b) Any other Type A packaging that also meets the applicable standards for fissile materials in 10 CFR part 71 and is used in accordance with § 173.471.

(c) Any Type B(U) or Type B(M) packaging authorized pursuant to § 173.416.

(d) Any foreign-made packaging that meets the standards in the " IAEA Regulations for the Safe Transport of Radioactive Material, SSR–6" (IBR, see § 171.7 of this subchapter) and bears the marking "Type A". Such packagings may be used for domestic and export shipments of Class 7 (radioactive) materials provided the offeror obtains the applicable documentation of tests and engineering evaluations and maintains the documentation on file in accordance with paragraph (a) of this section. These packagings must conform with requirements of the country of origin (as indicated by the packaging marking) and the IAEA regulations applicable to Type A packagings.

[Amdt. 173–244, 60 FR 50307, Sept. 28, 1995, as amended at 67 FR 61014, Sept. 27, 2002; 68 FR 75742, Dec. 31, 2003; 69 FR 3673, Jan. 26, 2004; 69 FR 55117, Sept. 13, 2004; 79 FR 40612, July 11, 2014; 80 FR 1163, Jan. 8, 2015]

§ 173.416 Authorized Type B packages.

Each of the following packages is authorized for shipment of quantities exceeding A_1 or A_2, as appropriate:

ED_001691B_00009240

(a) Any Type B(U) or Type B(M) packaging that meets the applicable requirements of 10 CFR part 71 and that has been approved by the U.S. Nuclear Regulatory Commission may be shipped pursuant to § 173.471.

(b) Any Type B(U) or B(M) packaging that meets the applicable requirements in ''IAEA Regulations for the Safe Transport of Radioactive Material, SSR–6'' (IBR, see § 171.7 of this subchapter) and for which the foreign Competent Authority Certificate has been revalidated by DOT pursuant to § 173.473. These packagings are authorized only for export and import shipments.

(c) A package approved by the U.S. Nuclear Regulatory Commission under a special package authorization granted in accordance with 10 CFR 71.41(d) provided it is offered only for domestic transportation in accordance with the requirements in § 173.471(b) and (c).

[69 FR 3673, Jan. 26, 2004, as amended at 79 FR 40612, July 11, 2014; 80 FR 1163, Jan. 8, 2015]

§ 173.417 Authorized fissile materials packages.

(a) Except as provided in § 173.453, fissile materials containing not more than A_1 or A_2 as appropriate, must be packaged in one of the following packagings:

(1)(i) Any packaging listed in § 173.415, limited to the Class 7 (radioactive) materials specified in 10 CFR part 71, subpart C;

(ii) Any Type AF, Type B(U)F, or Type B(M)F packaging that meets the applicable standards for fissile material packages in 10 CFR part 71; or

(iii) Any Type AF, Type B(U)F, or Type B(M)F packaging that meets the applicable requirements for fissile material packages in Section VI of the International Atomic Energy Agency ''Regulations for the Safe Transport of Radioactive Material, SSR–6 (IBR, see § 171.7 of this subchapter),'' and for which the foreign Competent Authority certificate has been revalidated by the U.S. Competent Authority, in accordance with § 173.473. These packages are authorized only for export and import shipments.

(2) A residual ''heel'' of enriched solid uranium hexafluoride may be transported without a protective overpack in any metal cylinder that meets both the requirements of § 173.415 and § 178.350 of this subchapter for Specification 7A Type A packaging, and the requirements of § 173.420 for packagings containing greater than 0.1 kg of uranium hexafluoride. Any such shipment must be made in accordance with Table 2, as follows:

TABLE 2—ALLOWABLE CONTENT OF URANIUM HEXAFLUORIDE (UF_6 "HEEL" IN A SPECIFICATION 7A CYLINDER)

Maximum cylinder diameter		Cylinder volume		Maximum Uranium 235-enrichment (weight) percent	Maximum "Heel" weight per cylinder			
					UF_6		Uranium-235	
Centimeters	Inches	Liters	Cubic feet		kg	lb	kg	lb
12.7	5	8.8	0.311	100.0	0.045	0.1	0.031	0.07
20.3	8	39.0	1.359	12.5	0.227	0.5	0.019	0.04
30.5	12	68.0	2.410	5.0	0.454	1.0	0.015	0.03
76.0	30	725.0	25.64	5.0	11.3	25.0	0.383	0.84
122.0	48	3,084.0	[1] 108.9	4.5	22.7	50.0	0.690	1.52
122.0	48	4,041.0	[2] 142.7	4.5	22.7	50.0	0.690	1.52

[1] 10 ton.
[2] 14 ton

(b) Fissile Class 7 (radioactive) materials with radioactive content exceeding A_1 or A_2 must be packaged in one of the following packagings:

(1) Type B(U), or Type B(M) packaging that meets the standards for packaging of fissile materials in 10 CFR part 71, and is approved by the U.S. Nuclear Regulatory Commission and used in accordance with § 173.471;

(2) Type B(U) or Type B(M) packaging that also meets the applicable

ED_001691B_00009240

requirements for fissile material packaging in Section VI of the International Atomic Energy Agency "Regulations for the Safe Transport of Radioactive Material, SSR–6," and for which the foreign Competent Authority certificate has been revalidated by the U.S. Competent Authority in accordance with §173.473. These packagings are authorized only for import and export shipments; or

(c) A package approved by the U.S. Nuclear Regulatory Commission under a special package authorization granted in accordance with 10 CFR 71.41(d) provided it is offered only for domestic transportation in accordance with the requirements in §173.471(b) and (c).

[69 FR 3673, Jan. 26, 2004; 69 FR 55118, Sept. 13, 2004, as amended at 79 FR 40612, July 11, 2014; 80 FR 1163, Jan. 8, 2015]

§ 173.418 Authorized packages—pyrophoric Class 7 (radioactive) materials.

Pyrophoric Class 7 (radioactive) materials, as referenced in the §172.101 table of this subchapter, in quantities not exceeding A_2 per package must be transported in DOT Specification 7A packagings constructed of materials that will not react with, nor be decomposed by, the contents. Contents of the package must be—

(a) In solid form and must not be fissile unless excepted by §173.453;

(b) Contained in sealed and corrosion resistant receptacles with positive closures (friction or slip-fit covers or stoppers are not authorized);

(c) Free of water and contaminants that would increase the reactivity of the material; and

(d) Inerted to prevent self-ignition during transport by either—

(1) Mixing with large volumes of inerting materials, such as graphite, dry sand, or other suitable inerting material, or blended into a matrix of hardened concrete; or

(2) Filling the innermost receptacle with an appropriate inert gas or liquid.

(e) Pyrophoric Class 7 (radioactive) materials transported by aircraft must be packaged in Type B packages.

[Amdt. 173–244, 60 FR 50307, Sept. 28, 1995, as amended at 68 FR 45038, July 31, 2003; 70 FR 56098, Sept. 23, 2005]

§ 173.419 Authorized packages—oxidizing Class 7 (radioactive) materials.

(a) An oxidizing Class 7 (radioactive) material, as referenced in the §172.101 table of this subchapter, is authorized in quantities not exceeding an A_2 per package, in a DOT Specification 7A package provided that—

(1) The contents are:

(i) Not fissile;

(ii) Packed in inside packagings of glass, metal or compatible plastic; and

(iii) Cushioned with a material that will not react with the contents; and

(2) The outside packaging is made of wood, metal, or plastic.

(b) The package must be capable of meeting the applicable test requirements of §173.465 without leakage of contents.

(c) For shipment by air, the maximum quantity in any package may not exceed 11.3 kg (25 pounds).

[Amdt. 173–244, 60 FR 50307, Sept. 28, 1995, as amended at 66 FR 45380, Aug. 28, 2001]

§ 173.420 Uranium hexafluoride (fissile, fissile excepted and non-fissile).

(a) In addition to any other applicable requirements of this subchapter, quantities greater than 0.1 kg of fissile, fissile excepted or non-fissile uranium hexafluoride must be offered for transportation as follows:

(1) Before initial filling and during periodic inspection and test, packagings must be cleaned in accordance with American National Standard N14.1 (IBR, see §171.7 of this subchapter).

(2) Packagings must be designed, fabricated, inspected, tested and marked in accordance with—

(i) American National Standard N14.1 in effect at the time the packaging was manufactured;

(ii) [Reserved]

(iii) Section VIII of the ASME Code (IBR, see §171.7 of this subchapter), provided the packaging—

(A) Was manufactured on or before June 30, 1987;

(B) Conforms to the edition of the ASME Code in effect at the time the packaging was manufactured;

(C) Is used within its original design limitations; and

ED_001691B_00009240

(D) Has shell and head thicknesses that have not decreased below the minimum value specified in the following table:

Packaging model	Minimum thickness; millimeters (inches)
1S, 2S	1.58 (0.062)
5A, 5B, 8A	3.17 (0.125)
12A, 12B	4.76 (0.187)
30B	7.93 (0.312)
48A, F, X, and Y	12.70 (0.500)
48T, O, OM, OM Allied, HX, H, and G	6.35 (0.250)

(3) Each package shall be designed so that it will:

(i) Withstand a hydraulic test at an internal pressure of at least 1.4 MPa (200 psig) without leakage;

(ii) Withstand the test specified in §173.465(c) without loss or dispersal of the uranium hexafluoride; and

(iii) Withstand the test specified in 10 CFR 71.73(c)(4) without rupture of the containment system.

(4) Uranium hexafluoride must be in solid form.

(5) The volume of solid uranium hexafluoride, except solid depleted uranium hexafluoride, at 20 °C (68 °F) may not exceed 61% of the certified volumetric capacity of the packaging. The volume of solid depleted uranium hexafluoride at 20 °C (68 °F) may not exceed 62% of the certified volumetric capacity of the packaging.

(6) The pressure in the package at 20 °C (68 °F) must be less than 101.3 kPa (14.7 psia).

(b) Each packaging for uranium hexafluoride must be periodically inspected, tested, marked and otherwise conform with the American National Standard N14.1.

(c) Each repair to a packaging for uranium hexafluoride must be performed in accordance with the American National Standard N14.1.

(d) Uranium hexafluoride not exceeding the limits specified in the limited quantity package limits column of table 4 in §173.425 may be classified as UN 3507, Uranium hexafluoride, radioactive material, excepted package, less than 0.1 kg (0.22 pounds) per package, non-fissile or fissile-excepted, provided that:

(1) The mass of uranium hexafluoride in the package is less than 0.1 kg (0.22 pounds); and

(2) The conditions of §§173.24, 173.24a, 173.421(a)(1) and (a)(4) are met.

(e) For a package containing 0.1 kg or more of UF_6, the proper shipping name and UN number "Radioactive material, uranium hexafluoride, UN 2978" must be used for the transportation of non-fissile or fissile-excepted uranium hexafluoride and the proper shipping name and UN number "Radioactive material, uranium hexafluoride, fissile, UN 2977" must be used for the transport of fissile uranium hexafluoride.

[69 FR 3675, Jan. 26, 2004; 69 FR 55118, Sept. 13, 2004, as amended at 79 FR 40612, July 11, 2014; 80 FR 1162, Jan. 8, 2015]

§173.421 Excepted packages for limited quantities of Class 7 (radioactive) materials.

A Class 7 (radioactive) material with an activity per package which does not exceed the limited quantity package limits specified in Table 4 in §173.425, and its packaging, are excepted from requirements in this subchapter for specification packaging, marking (except for the UN identification number marking requirement described in §173.422(a)), labeling, and if not a hazardous substance or hazardous waste, shipping papers, and the requirements of this subpart if:

(a) Each package meets the general design requirements of §173.410;

(b) The radiation level at any point on the external surface of the package does not exceed 0.005 mSv/h (0.5 mrem/h);

(c) The non-fixed contamination on the external surface of the package does not exceed the limits specified in §173.443(a);

(d) The outside of the inner packaging or, if there is no inner packaging, the outside of the packaging itself bears the marking "Radioactive;"

(e) The package does not contain fissile material unless excepted by §173.453; and

(f) The material is otherwise prepared for shipment as specified in accordance with §173.422.

[79 FR 40613, July 11, 2014]

ED_001691B_00009240

§ 173.422 Additional requirements for excepted packages containing Class 7 (radioactive) materials.

An excepted package of Class 7 (radioactive) material that is prepared for shipment under the provisions of § 173.421, § 173.424, § 173.426, or § 173.428, or a small quantity of another hazard class transported by highway or rail (as defined in § 173.4) which also meets the requirements of one of these sections, is not subject to any additional requirements of this subchapter, except for the following:

(a) The outside of each package must be marked with:

(1) The UN identification number for the material preceded by the letters UN, as shown in column (4) of the Hazardous Materials Table in § 172.101 of this subchapter; and

(2) The letters "RQ" on a non-bulk packaging containing a hazardous substance.

(b) Sections 171.15 and 171.16 of this subchapter, pertaining to the reporting of incidents;

(c) Sections 174.750, 175.700(b), and 176.710 of this subchapter (depending on the mode of transportation), pertaining to the reporting of decontamination;

(d) The training requirements of subpart H of part 172 of this subchapter; and

(e) For a material that meets the definition of a hazardous substance or a hazardous waste, the shipping paper requirements of subpart C of part 172 of this subchapter, except that such shipments are not subject to shipping paper requirements applicable to Class 7 (radioactive) materials in §§ 172.202(a)(5), 172.202(a)(6), 172.203(d) and 172.204(c)(4).

[69 FR 3675, Jan. 26, 2004, as amended at 79 FR 40613, July 11, 2014]

§ 173.423 Requirements for multiple hazard limited quantity Class 7 (radioactive) materials.

(a) Except as provided in § 173.4, when a limited quantity radioactive material meets the definition of another hazard class or division, it must be—

(1) Classed for the additional hazard;

(2) Packaged to conform with the requirements specified in § 173.421(a)(1) through (a)(5) or § 173.424(a) through (g), as appropriate; and

(3) Offered for transportation in accordance with the requirements applicable to the hazard for which it is classed.

(b) A limited quantity Class 7 (radioactive) material which is classed other than Class 7 in accordance with this subchapter is excepted from the requirements of §§ 173.422(a), 172.203(d), and 172.204(c)(4) of this subchapter if the entry "Limited quantity radioactive material" appears on the shipping paper in association with the basic description.

§ 173.424 Excepted packages for radioactive instruments and articles.

A radioactive instrument or article and its packaging are excepted from requirements in this subchapter for specification packaging, labeling, marking (except for the UN identification number marking requirement described in § 173.422(a)), and if not a hazardous substance or hazardous waste, shipping papers and the requirements of this subpart if:

(a) Each package meets the general design requirements of § 173.410;

(b) The activity of the instrument or article does not exceed the relevant limit listed in Table 4 in § 173.425;

(c) The total activity per package does not exceed the relevant limit listed in Table 4 in § 173.425;

(d) The radiation level at 10 cm (4 in) from any point on the external surface of any unpackaged instrument or article does not exceed 0.1 mSv/hour (10 mrem/hour);

(e) The active material is completely enclosed by non-active components (a device performing the sole function of containing radioactive material shall not be considered to be an instrument or manufactured article);

(f) The radiation level at any point on the external surface of a package bearing the article or instrument does not exceed 0.005 mSv/hour (0.5 mrem/hour), or, for exclusive use domestic shipments, 0.02 mSv/hour (2 mrem/hour);

(g) The nonfixed (removable) radioactive surface contamination on the external surface of the package does not exceed the limits specified in § 173.443(a);

ED_001691B_00009240

(h) Except as provided in § 173.426, the package does not contain more than 15 g of uranium-235; and

(i) The package is otherwise prepared for shipment as specified in § 173.422.

[69 FR 3675, Jan. 26, 2004]

§ 173.425 Table of activity limits—excepted quantities and articles.

The limits applicable to instruments, articles, and limited quantities subject to exceptions under §§ 173.421 and 173.424 are set forth in table 4 as follows:

TABLE 4—ACTIVITY LIMITS FOR LIMITED QUANTITIES, INSTRUMENTS, AND ARTICLES

Nature of contents	Instruments and articles		Limited quantity package limits [1]
	Limits for each instrument or article [1]	Package limits [1]	
Solids:			
Special form	10^{-2} A_1	A_1	10^{-3} A_1
Normal form	10^{-2} A_2	A_2	10^{-3} A_2
Liquids:			
Tritiated water:			
<0.0037 TBq/L (0.1 Ci/L)			37 TBq (1,000 Ci)
0.0037 TBq to 0.037 TBq/L (0.1 Ci to 1.0 Ci/L).			3.7 TBq (100 Ci)
>0.037 TBq/L (1.0 Ci/L)			0.037 TBq (1.0 Ci)
Other Liquids	10^{-3} A_2	10^{-1} A_2	10^{-4} A_2
Gases:			
Tritium [2]	2×10^{-2} A_2	2×10^{-1} A_2	2×10^{-2} A_2
Special form	10^{-3} A_1	10^{-2} A_1	10^{-3} A_1
Normal form	10^{-3} A_2	10^{-2} A_2	10^{-3} A_2

[1] For mixtures of radionuclides see § 173.433(d).
[2] These values also apply to tritium in activated luminous paint and tritium adsorbed on solid carriers.

[Amdt. 173–244, 60 FR 50307, Sept. 28, 1995, as amended by Amdt. 173–244, 61 FR 20751, May 8, 1996; 63 FR 52849, Oct. 1, 1998; 65 FR 58630, Sept. 29, 2000; 66 FR 45383, Aug. 28, 2001; 69 FR 3676, Jan. 26, 2004]

§ 173.426 Excepted packages for articles containing natural uranium or thorium.

A manufactured article in which the sole Class 7 (radioactive) material content is natural uranium, unirradiated depleted uranium or natural thorium, and its packaging, are excepted from the requirements in this subchapter for specification packaging, labeling, marking (except for the UN identification number marking requirement described in § 173.422(a)), and if not a hazardous substance or hazardous waste, shipping papers and the requirements of this subpart if:

(a) Each package meets the general design requirements of § 173.410;

(b) The outer surface of the uranium or thorium is enclosed in an inactive sheath made of metal or other durable protective material;

(c) The conditions specified in § 173.421(a) (2), (3) and (4) are met; and

(d) The article is otherwise prepared for shipment as specified in § 173.422.

[Amdt. 173–244, 60 FR 50307, Sept. 28, 1995, as amended by Amdt. 173–244, 61 FR 20752, May 8, 1996; 69 FR 3676, Jan. 26, 2004]

§ 173.427 Transport requirements for low specific activity (LSA) Class 7 (radioactive) material and surface contaminated objects (SCO).

(a) In addition to other applicable requirements specified in this subchapter, LSA material and SCO must be transported in accordance with the following conditions:

(1) The external dose rate may not exceed an external radiation level of 10 mSv/h (1 rem/h) at 3 m (10 feet) from the unshielded material;

(2) The quantity of LSA material and SCO transported in any single conveyance may not exceed the limits specified in Table 5;

(3) LSA material and SCO that are or contain fissile material must conform to the applicable requirements of § 173.453;

ED_001691B_00009240

(4) Packaged and unpackaged Class 7 (radioactive) materials must conform to the contamination control limits specified in § 173.443;

(5) External radiation levels may not exceed those specified in § 173.441; and

(6) For LSA material and SCO consigned as exclusive use:

(i) Shipments must be loaded by the consignor and unloaded by the consignee from the conveyance or freight container in which originally loaded;

(ii) There may be no loose radioactive material in the conveyance; however, when the conveyance is the packaging, there may not be any leakage of radioactive material from the conveyance;

(iii) Packaged and unpackaged Class 7 (radioactive) material must be braced so as to prevent shifting of lading under conditions normally incident to transportation;

(iv) Specific instructions for maintenance of exclusive use shipment controls shall be provided by the offeror to the carrier. Such instructions must be included with the shipping paper information;

(v) The shipment must be placarded in accordance with subpart F of part 172 of this subchapter;

(vi) For domestic transportation only, packaged and unpackaged Class 7 (radioactive) material containing less than an A_2 quantity are excepted from the marking and labeling requirements of this subchapter, other than the subsidiary hazard labeling required in § 172.402(d). However, the exterior of each package or unpackaged Class 7 (radioactive) material must be stenciled or otherwise marked "RADIOACTIVE—LSA" or "RADIOACTIVE—SCO", as appropriate, and packages or unpackaged Class 7 (radioactive) material that contain a hazardous substance must be stenciled or otherwise marked with the letters "RQ" in association with the description in this paragraph (a)(6)(vi); and

(vii) Transportation by aircraft is prohibited except when transported in an industrial package in accordance with Table 6 of this section, or in an authorized Type A or Type B package.

(b) Except as provided in paragraph (c) or (d) of this section, LSA material and SCO must be packaged as follows:

(1) In an industrial package (Type IP–1, Type IP–2 or Type IP–3; § 173.411), subject to the limitations of Table 6;

(2) In a DOT Specification 7A (§ 178.350 of this subchapter) Type A package;

(3) In any Type B(U) or B(M) packaging authorized pursuant to § 173.416;

(4) For domestic transportation of an exclusive use shipment that is less than an A_2 quantity, in a packaging which meets the requirements of § 173.410; or

(5) In portable tanks, cargo tanks and tank cars, as provided in § 173.411(b)(4) and (5), respectively.

(c) LSA–I material and SCO–I may be transported unpackaged under the following conditions:

(1) All unpackaged material, other than ores containing only naturally occurring radionuclides, must be transported in such a manner that under routine conditions of transport there will be no escape of the radioactive contents from the conveyance nor will there be any loss of shielding;

(2) Each conveyance must be under exclusive use, except when only transporting SCO–I on which the contamination on the accessible and the inaccessible surfaces is not greater than 4.0 Bq/cm^2 for beta and gamma emitters and low toxicity alpha emitters and 0.4 Bq/cm^2 for all other alpha emitters;

(3) For SCO–I where it is reasonable to suspect that non-fixed contamination may exist on inaccessible surfaces in excess of the values specified in paragraph (c)(2) of this section, measures shall be taken to ensure that the radioactive material is not released into the conveyance or to the environment; and

(4) The highway or rail conveyance must be placarded in accordance with subpart F of part 172 of this subchapter.

(d) LSA material and SCO that exceed the packaging limits in this section must be packaged in accordance with 10 CFR part 71.

(e) Tables 5 and 6 are as follows:

ED_001691B_00009240

TABLE 5—CONVEYANCE ACTIVITY LIMITS FOR LSA MATERIAL AND SCO

Nature of material	Activity limit for conveyances other than by inland waterway	Activity limit for hold or compartment of an inland waterway conveyance
1. LSA–I	No limit	No limit.
2. LSA–II and LSA–III; Non-combustible solids	No limit	100 A_2.
3. LSA–II and LSA–III; Combustible solids and all liquids and gases.	100 A_2	10 A_2.
4. SCO	100 A_2	10 A_2.

TABLE 6—INDUSTRIAL PACKAGE INTEGRITY REQUIREMENTS FOR LSA MATERIAL AND SCO

Contents	Industrial packaging type	
	Exclusive use shipment	Non exclusive use shipment
1. LSA–I:		
Solid	Type IP–1	Type IP–1.
Liquid	Type IP–1	Type IP–2.
2. LSA–II:		
Solid	Type IP–2	Type IP–2.
Liquid and gas	Type IP–2	Type IP–3.
3. LSA–III	Type IP–2	Type IP–3.
4. SCO–I	Type IP–1	Type IP–1.
5. SCO–II	Type IP–2	Type IP–2.

[79 FR 40613, July 11, 2014]

§ 173.428 Empty Class 7 (radioactive) materials packaging.

A packaging which previously contained Class 7 (radioactive) materials and has been emptied of contents as far as practical, is excepted from the shipping paper and marking (except for the UN identification number marking requirement described in § 173.422(a)) requirements of this subchapter, provided that—

(a) The packaging meets the requirements of § 173.421(a) (2), (3), and (5) of this subpart;

(b) The packaging is in unimpaired condition and is securely closed so that there will be no leakage of Class 7 (radioactive) material under conditions normally incident to transportation;

(c) The outer surface of any uranium or thorium in its structure is covered with an inactive sheath made of metal or some other substantial material;

(d) Internal contamination does not exceed 100 times the limits in § 173.443(a);

(e) Any labels previously applied in conformance with subpart E of part 172 of this subchapter are removed, obliterated, or covered and the ''Empty'' label prescribed in § 172.450 of this subchapter is affixed to the packaging; and

(f) The packaging is prepared for shipment as specified in § 173.422.

[Amdt. 173–244, 60 FR 50307, Sept. 28, 1995, as amended by Amdt. 173–244, 61 FR 20752, May 8, 1996; 64 FR 51919, Sept. 27, 1999; 69 FR 3677, Jan. 26, 2004]

§ 173.431 Activity limits for Type A and Type B packages.

(a) Except for LSA material and SCO, a Type A package may not contain a quantity of Class 7 (radioactive) materials greater than A_1 for special form Class 7 (radioactive) material or A_2 for normal form Class 7 (radioactive) material as listed in § 173.435, or, for Class 7 (radioactive) materials not listed in § 173.435, as determined in accordance with § 173.433.

(b) The limits on activity contained in a Type B(U) or Type B(M) package are those prescribed in §§ 173.416 and 173.417, or in the applicable approval certificate under § 173.471, § 173.472 or § 173.473.

[Amdt. 173–244, 60 FR 50307, Sept. 28, 1995, as amended at 69 FR 3677, Jan. 26, 2004]

ED_001691B_00009240

§ 173.433 Requirements for determining basic radionuclide values, and for the listing of radionuclides on shipping papers and labels.

(a) For individual radionuclides listed in the table in § 173.435 and § 173.436:

(1) A_1 and A_2 values are given in the table in § 173.435; and

(2) Activity concentration exemption values and consignment activity exemption values are given in the table in § 173.436.

(b) For individual radionuclides which are not listed in the tables in § 173.435 or § 173.436 or for which no relevant data are available:

(1) the radionuclide values in Tables 7 or 8 of this section may be used; or

(2) other basic radionuclide values may be used provided they are first approved by the Associate Administrator or, for international transport, multilateral approval is obtained from the pertinent Competent Authorities.

(c) In calculating A_1 and A_2 values for approval in accordance with paragraph (b)(2) of this section:

(1) It is permissible to use an A_2 value calculated using a dose coefficient for the appropriate lung absorption type, as recommended by the International Commission on Radiological Protection, if the chemical forms of each radionuclide under both normal and accident conditions of transport are taken into consideration.

(2) A single radioactive decay chain in which the radionuclides are present in their naturally-occurring proportions, and in which no daughter nuclide has a half life either longer than 10 days or longer than that of the parent nuclide, will be considered as a single radionuclide, and the activity to be taken into account and the A_1 or A_2 value to be applied will be those corresponding to the parent nuclide of that chain. Otherwise, the parent and daughter nuclides will be considered as a mixture of different nuclides.

(d) Mixtures of radionuclides whose identities and respective activities are known must conform to the following conditions:

(1) For special form Class 7 (radioactive) material, the activity which may be transported in a Type A package must satisfy:

$$\sum_i \frac{B(i)}{A_1(i)} \leq 1$$

Where:

B(i) is the activity of radionuclide i in special form; and

A_1 (i) is the A_1 value for radionuclide i.

(2) For normal form Class 7 (radioactive) material, the activity which may be transported in a Type A package must satisfy:

$$\sum_j \frac{C(j)}{A_2(j)} \leq 1$$

Where:

C(j) is the activity of radionuclide j in normal form; and

$A_2(j)$ is the A_2 value for radionuclide j.

(3) If the package contains both special and normal form Class 7 (radioactive) material, the activity which may be transported in a Type A package must satisfy:

$$\sum_i \frac{B(i)}{A_1(i)} + \sum_j \frac{C(j)}{A_2(j)} \leq 1$$

Where:

The symbols are defined as in paragraphs (d)(1) and (d)(2) of this section.

(4) Alternatively, the A_1 value for a mixture of special form material may be determined as follows:

$$A_1 \text{ for mixture} = \frac{1}{\sum_i \frac{f(i)}{A_1(i)}}$$

Where:

f(i) is the fraction of activity for radionuclide i in the mixture; and

$A_1(i)$ is the appropriate A_1 value for radionuclide i.

(5) Alternatively, the A_2 value for mixtures of normal form material may be determined as follows:

$$A_2 \text{ for mixture} = \frac{1}{\sum_i \frac{f(i)}{A_2(i)}}$$

Where:

f(i) is the fraction of activity for normal form radionuclide i in the mixture; and

$A_2(i)$ is the appropriate A_2 value for radionuclide i.

ED_001691B_00009240

(6) The exempt activity concentration for mixtures of nuclides may be determined as follows:

$$\text{Exempt activity concentration limit for mixture} = \frac{1}{\sum_i \frac{f(i)}{[A](i)}}$$

Where:

f(i) is the fraction of activity concentration of nuclide i in the mixture; and [A](i) is the activity concentration for exempt material containing nuclide i.

(7) The activity limit for an exempt consignment for mixtures of nuclides may be determined as follows:

$$\text{Exempt consignment activity limit for mixture} = \frac{1}{\sum_i \frac{f(i)}{A(i)}}$$

Where:

f(i) is the fraction of activity of nuclide i in the mixture; and

A(i) is the activity limit for exempt consignments for nuclide i.

(e) When the identity of each nuclide is known but the individual activities of some of the radionuclides are not known, the radionuclides may be grouped and the lowest A_1 or A_2 value, as appropriate, for the radionuclides in each group may be used in applying the formulas in paragraphs (d)(1) through (d)(5) of this section. Groups may be based on the total alpha activity and the total beta/gamma activity when these are known, using the lowest A_1 or A_2 values for the alpha emitters or beta/gamma emitters, respectively.

(f) When the identity of each nuclide is known but the individual activities of some of the radionuclides are not known, the radionuclides may be grouped and the lowest [A] (activity concentration for exempt material) or A (activity limit for exempt consignment) value, as appropriate, for the radionuclides in each group may be used in applying the formulas in paragraphs (d)(6) and (d)(7) of this section. Groups may be based on the total alpha activity and the total beta/gamma activity when these are known, using the lowest [A] or A values for the alpha emitters or beta/gamma emitters, respectively.

(g) *Shipping papers and labeling.* For mixtures of radionuclides, the radionuclides (n) that must be shown on shipping papers and labels in accordance with §§ 172.203 and 172.403 of this subchapter, respectively, must be determined on the basis of the following formula:

$$\sum_{i=1}^{n} \frac{a_{(i)}}{A_{(i)}} \geq 0.95 \sum_{i=1}^{n+m} \frac{a_{(i)}}{A_{(i)}}$$

Where:

n + m represents all the radionuclides in the mixture;

m are the radionuclides that do not need to be considered;

$a_{(i)}$ is the activity of radionuclide i in the mixture; and

$A_{(i)}$ is the A_1 or A_2 value, as appropriate for radionuclide i.

(h) Tables 7 and 8 are as follows:

ED_001691B_00009240

TABLE 7—GENERAL VALUES FOR A_1 AND A_2

Radioactive contents	A_1		A_2	
	(TBq)	(Ci)	(TBq)	(Ci)
1. Only beta or gamma emitting nuclides are known to be present	1×10^{-1}	2.7×10^{0}	2×10^{-2}	5.4×10^{-1}
2. Alpha emitting nuclides, but no beta, gamma, or neutron emitters, are known to be present [1]	2×10^{-1}	5.4×10^{0}	9×10^{-5}	2.4×10^{-3}
3. Neutron emitting nuclides are known to be present or no relevant data are available	1×10^{-3}	2.7×10^{-2}	9×10^{-5}	2.4×10^{-3}

[1] If beta or gamma emitting nuclides are also known to be present, the A_1 value of 0.1 TBq (2.7 Ci) should be used.

TABLE 8—GENERAL EXEMPTION VALUES

Radioactive contents	Activity concentration for exempt material		Activity limits for exempt consignments	
	(Bq/g)	(Ci/g)	(Bq)	(Ci)
1. Only beta or gamma emitting nuclides are known to be present	1×10^{1}	2.7×10^{-10}	1×10^{4}	2.7×10^{-7}
2. Alpha emitting nuclides, but no neutron emitters, are known to be present	1×10^{-1}	2.7×10^{-12}	1×10^{3}	2.7×10^{-8}
3. Neutron emitting nuclides are known to be present or no relevant data are available	1×10^{-1}	2.7×10^{-12}	1×10^{3}	2.7×10^{-8}

[69 FR 3677, Jan. 26, 2004; 69 FR 55119, Sept. 13, 2004, as amended at 79 FR 40614, July 11, 2014]

§ 173.434 Activity-mass relationships for uranium and natural thorium.

The table of activity-mass relationships for uranium and natural thorium are as follows:

Thorium and uranium enrichment [1] (Wt% ^{235}U present)	Specific activity			
	TBq/gram	Grams/Tbq	Ci/gram	Grams/Ci
0.45 (depleted)	1.9×10^{-8}	5.4×10^{7}	5.0×10^{-7}	2.0×10^{6}
0.72 (natural)	2.6×10^{-8}	3.8×10^{7}	7.1×10^{-7}	1.4×10^{6}
1.0	2.8×10^{-8}	3.6×10^{7}	7.6×10^{-7}	1.3×10^{6}
1.5	3.7×10^{-8}	2.7×10^{7}	1.0×10^{-6}	1.0×10^{6}
5.0	1.0×10^{-7}	1.0×10^{7}	2.7×10^{-6}	3.7×10^{5}
10.0	1.8×10^{-7}	5.6×10^{6}	4.8×10^{-6}	2.1×10^{5}
20.0	3.7×10^{-7}	2.7×10^{6}	1.0×10^{-5}	1.0×10^{5}
35.0	7.4×10^{-7}	1.4×10^{6}	2.0×10^{-5}	5.0×10^{4}
50.0	9.3×10^{-7}	1.1×10^{6}	2.5×10^{-5}	4.0×10^{4}
90.0	2.1×10^{-6}	4.7×10^{5}	5.8×10^{-5}	1.7×10^{4}
93.0	2.6×10^{-6}	3.9×10^{5}	7.0×10^{-5}	1.4×10^{4}
95.0	3.4×10^{-6}	3.0×10^{5}	9.1×10^{-5}	1.1×10^{4}
Natural thorium	8.1×10^{-9}	1.2×10^{8}	2.2×10^{-7}	4.6×10^{6}

[1] The figures for uranium include representative values for the activity of uranium-234 which is concentrated during the enrichment process. The activity for thorium includes the equilibrium concentration of thorium-228.

[Amdt. 173–244, 60 FR 50307, Sept. 28, 1995, as amended by 63 FR 52849, Oct. 1, 1998]

§ 173.435 Table of A_1 and A_2 values for radionuclides.

The table of A_1 and A_2 values for radionuclides is as follows:

Symbol of radionuclide	Element and atomic number	A_1 (TBq)	A_1 (Ci) [b]	A_2 (TBq)	A_2 (Ci) [b]	Specific activity	
						(TBq/g)	(Ci/g)
Ac-225 (a)	Actinium (89)	8.0×10^{-1}	2.2×10^{1}	6.0×10^{-3}	1.6×10^{-1}	2.1×10^{3}	5.8×10^{4}
Ac-227 (a)		9.0×10^{-1}	2.4×10^{1}	9.0×10^{-5}	2.4×10^{-3}	2.7	7.2×10^{1}
Ac-228		6.0×10^{-1}	1.6×10^{1}	5.0×10^{-1}	1.4×10^{1}	8.4×10^{4}	2.2×10^{6}
Ag-105	Silver (47)	2.0	5.4×10^{1}	2.0	5.4×10^{1}	1.1×10^{3}	3.0×10^{4}
Ag-108m (a)		7.0×10^{-1}	1.9×10^{1}	7.0×10^{-1}	1.9×10^{1}	9.7×10^{-1}	2.6×10^{1}

ED_001691B_00009240

Symbol of radionuclide	Element and atomic number	A_1 (TBq)	A_1 (Ci) [b]	A_2 (TBq)	A_2 (Ci) [b]	Specific activity	
						(TBq/g)	(Ci/g)
Ag-110m (a)		4.0×10^{-1}	1.1×10^{1}	4.0×10^{-1}	1.1×10^{1}	1.8×10^{2}	4.7×10^{3}
Ag-111		2.0	5.4×10^{1}	6.0×10^{-1}	1.6×10^{1}	5.8×10^{3}	1.6×10^{5}
Al-26	Aluminum (13)	1.0×10^{-1}	2.7	1.0×10^{-1}	2.7	7.0×10^{-4}	1.9×10^{-2}
Am-241	Americium (95)	1.0×10^{1}	2.7×10^{2}	1.0×10^{-3}	2.7×10^{-2}	1.3×10^{-1}	3.4
Am-242m (a)		1.0×10^{1}	2.7×10^{2}	1.0×10^{-3}	2.7×10^{-2}	3.6×10^{-1}	1.0×10^{1}
Am-243 (a)		5.0	1.4×10^{2}	1.0×10^{-3}	2.7×10^{-2}	7.4×10^{-3}	2.0×10^{-1}
Ar-37	Argon (18)	4.0×10^{1}	1.1×10^{3}	4.0×10^{1}	1.1×10^{3}	3.7×10^{3}	9.9×10^{4}
Ar-39		4.0×10^{1}	1.1×10^{3}	2.0×10^{1}	5.4×10^{2}	1.3	3.4×10^{1}
Ar-41		3.0×10^{-1}	8.1	3.0×10^{-1}	8.1	1.5×10^{6}	4.2×10^{7}
As-72	Arsenic (33)	3.0×10^{-1}	8.1	3.0×10^{-1}	8.1	6.2×10^{4}	1.7×10^{6}
As-73		4.0×10^{1}	1.1×10^{3}	4.0×10^{1}	1.1×10^{3}	8.2×10^{2}	2.2×10^{4}
As-74		1.0	2.7×10^{1}	9.0×10^{-1}	2.4×10^{1}	3.7×10^{3}	9.9×10^{4}
As-76		3.0×10^{-1}	8.1	3.0×10^{-1}	8.1	5.8×10^{4}	1.6×10^{6}
As-77		2.0×10^{1}	5.4×10^{2}	7.0×10^{-1}	1.9×10^{1}	3.9×10^{4}	1.0×10^{6}
At-211 (a)	Astatine (85)	2.0×10^{1}	5.4×10^{2}	5.0×10^{-1}	1.4×10^{1}	7.6×10^{4}	2.1×10^{6}
Au-193	Gold (79)	7.0	1.9×10^{2}	2.0	5.4×10^{1}	3.4×10^{4}	9.2×10^{5}
Au-194		1.0	2.7×10^{1}	1.0	2.7×10^{1}	1.5×10^{4}	4.1×10^{5}
Au-195		1.0×10^{1}	2.7×10^{2}	6.0	1.6×10^{2}	1.4×10^{2}	3.7×10^{3}
Au-198		1.0	2.7×10^{1}	6.0×10^{-1}	1.6×10^{1}	9.0×10^{3}	2.4×10^{5}
Au-199		1.0×10^{1}	2.7×10^{2}	6.0×10^{-1}	1.6×10^{1}	7.7×10^{3}	2.1×10^{5}
Ba-131 (a)	Barium (56)	2.0	5.4×10^{1}	2.0	5.4×10^{1}	3.1×10^{3}	8.4×10^{4}
Ba-133		3.0	8.1×10^{1}	3.0	8.1×10^{1}	9.4	2.6×10^{2}
Ba-133m		2.0×10^{1}	5.4×10^{2}	6.0×10^{-1}	1.6×10^{1}	2.2×10^{4}	6.1×10^{5}
Ba-140 (a)		5.0×10^{-1}	1.4×10^{1}	3.0×10^{-1}	8.1	2.7×10^{3}	7.3×10^{4}
Be-7	Beryllium (4)	2.0×10^{1}	5.4×10^{2}	2.0×10^{1}	5.4×10^{2}	1.3×10^{4}	3.5×10^{5}
Be-10		4.0×10^{1}	1.1×10^{3}	6.0×10^{-1}	1.6×10^{1}	8.3×10^{-4}	2.2×10^{-2}
Bi-205	Bismuth (83)	7.0×10^{-1}	1.9×10^{1}	7.0×10^{-1}	1.9×10^{1}	1.5×10^{3}	4.2×10^{4}
Bi-206		3.0×10^{-1}	8.1	3.0×10^{-1}	8.1	3.8×10^{3}	1.0×10^{5}
Bi-207		7.0×10^{-1}	1.9×10^{1}	7.0×10^{-1}	1.9×10^{1}	1.9	5.2×10^{1}
Bi-210		1.0	2.7×10^{1}	6.0×10^{-1}	1.6×10^{1}	4.6×10^{3}	1.2×10^{5}
Bi-210m (a)		6.0×10^{-1}	1.6×10^{1}	2.0×10^{-2}	5.4×10^{-1}	2.1×10^{-5}	5.7×10^{-4}
Bi-212 (a)		7.0×10^{-1}	1.9×10^{1}	6.0×10^{-1}	1.6×10^{1}	5.4×10^{5}	1.5×10^{7}
Bk-247	Berkelium (97)	8.0	2.2×10^{2}	8.0×10^{-4}	2.2×10^{-2}	3.8×10^{-2}	1.0
Bk-249 (a)		4.0×10^{1}	1.1×10^{3}	3.0×10^{-1}	8.1	6.1×10^{1}	1.6×10^{3}
Br-76	Bromine (35)	4.0×10^{-1}	1.1×10^{1}	4.0×10^{-1}	1.1×10^{1}	9.4×10^{4}	2.5×10^{6}
Br-77		3.0	8.1×10^{1}	3.0	8.1×10^{1}	2.6×10^{4}	7.1×10^{5}
Br-82		4.0×10^{-1}	1.1×10^{1}	4.0×10^{-1}	1.1×10^{1}	4.0×10^{4}	1.1×10^{6}
C-11	Carbon (6)	1.0	2.7×10^{1}	6.0×10^{-1}	1.6×10^{1}	3.1×10^{7}	8.4×10^{8}
C-14		4.0×10^{1}	1.1×10^{3}	3.0	8.1×10^{1}	1.6×10^{-1}	4.5
Ca-41	Calcium (20)	Unlimited	Unlimited	Unlimited	Unlimited	3.1×10^{-3}	8.5×10^{-2}
Ca-45		4.0×10^{1}	1.1×10^{3}	1.0	2.7×10^{1}	6.6×10^{2}	1.8×10^{4}
Ca-47 (a)		3.0	8.1×10^{1}	3.0×10^{-1}	8.1	2.3×10^{4}	6.1×10^{5}
Cd-109	Cadmium (48)	3.0×10^{1}	8.1×10^{2}	2.0	5.4×10^{1}	9.6×10^{1}	2.6×10^{3}

ED_001691B_00009240

Symbol of radionuclide	Element and atomic number	A_1 (TBq)	A_1 (Ci) [b]	A_2 (TBq)	A_2 (Ci) [b]	Specific activity	
						(TBq/g)	(Ci/g)
Cd-113m		4.0×10^{1}	1.1×10^{3}	5.0×10^{-1}	1.4×10^{1}	8.3	2.2×10^{2}
Cd-115 (a)		3.0	8.1×10^{1}	4.0×10^{-1}	1.1×10^{1}	1.9×10^{4}	5.1×10^{5}
Cd-115m		5.0×10^{-1}	1.4×10^{1}	5.0×10^{-1}	1.4×10^{1}	9.4×10^{2}	2.5×10^{4}
Ce-139	Cerium (58)	7.0	1.9×10^{2}	2.0	5.4×10^{1}	2.5×10^{2}	6.8×10^{3}
Ce-141		2.0×10^{1}	5.4×10^{2}	6.0×10^{-1}	1.6×10^{1}	1.1×10^{3}	2.8×10^{4}
Ce-143		9.0×10^{-1}	2.4×10^{1}	6.0×10^{-1}	1.6×10^{1}	2.5×10^{4}	6.6×10^{5}
Ce-144 (a)		2.0×10^{-1}	5.4	2.0×10^{-1}	5.4	1.2×10^{2}	3.2×10^{3}
Cf-248	Californium (98)	4.0×10^{1}	1.1×10^{3}	6.0×10^{-3}	1.6×10^{-1}	5.8×10^{1}	1.6×10^{3}
Cf-249		3.0	8.1×10^{1}	8.0×10^{-4}	2.2×10^{-2}	1.5×10^{-1}	4.1
Cf-250		2.0×10^{1}	5.4×10^{2}	2.0×10^{-3}	5.4×10^{-2}	4.0	1.1×10^{2}
Cf-251		7.0	1.9×10^{2}	7.0×10^{-4}	1.9×10^{-2}	5.9×10^{-2}	1.6
Cf-252		1×10^{-1}	2.7	3.0×10^{-3}	8.1×10^{-2}	2.0×10^{1}	5.4×10^{2}
Cf-253 (a)		4.0×10^{1}	1.1×10^{3}	4.0×10^{-2}	1.1	1.1×10^{3}	2.9×10^{4}
Cf-254		1.0×10^{-3}	2.7×10^{-2}	1.0×10^{-3}	2.7×10^{-2}	3.1×10^{2}	8.5×10^{3}
Cl-36	Chlorine (17)	1.0×10^{1}	2.7×10^{2}	6.0×10^{-1}	1.6×10^{1}	1.2×10^{-3}	3.3×10^{-2}
Cl-38		2.0×10^{-1}	5.4	2.0×10^{-1}	5.4	4.9×10^{6}	1.3×10^{8}
Cm-240	Curium (96)	4.0×10^{1}	1.1×10^{3}	2.0×10^{-2}	5.4×10^{-1}	7.5×10^{2}	2.0×10^{4}
Cm-241		2.0	5.4×10^{1}	1.0	2.7×10^{1}	6.1×10^{2}	1.7×10^{4}
Cm-242		4.0×10^{1}	1.1×10^{3}	1.0×10^{-2}	2.7×10^{-1}	1.2×10^{2}	3.3×10^{3}
Cm-243		9.0	2.4×10^{2}	1.0×10^{-3}	2.7×10^{-2}	1.9	5.2×10^{1}
Cm-244		2.0×10^{1}	5.4×10^{2}	2.0×10^{-3}	5.4×10^{-2}	3.0	8.1×10^{1}
Cm-245		9.0	2.4×10^{2}	9.0×10^{-4}	2.4×10^{-2}	6.4×10^{-3}	1.7×10^{-1}
Cm-246		9.0	2.4×10^{2}	9.0×10^{-4}	2.4×10^{-2}	1.1×10^{-2}	3.1×10^{-1}
Cm-247 (a)		3.0	8.1×10^{1}	1.0×10^{-3}	2.7×10^{-2}	3.4×10^{-6}	9.3×10^{-5}
Cm-248		2.0×10^{-2}	5.4×10^{-1}	3.0×10^{-4}	8.1×10^{-3}	1.6×10^{-4}	4.2×10^{-3}
Co-55	Cobalt (27)	5.0×10^{-1}	1.4×10^{1}	5.0×10^{-1}	1.4×10^{1}	1.1×10^{5}	3.1×10^{6}
Co-56		3.0×10^{-1}	8.1	3.0×10^{-1}	8.1	1.1×10^{3}	3.0×10^{4}
Co-57		1.0×10^{1}	2.7×10^{2}	1.0×10^{1}	2.7×10^{2}	3.1×10^{2}	8.4×10^{3}
Co-58		1.0	2.7×10^{1}	1.0	2.7×10^{1}	1.2×10^{3}	3.2×10^{4}
Co-58m		4.0×10^{1}	1.1×10^{3}	4.0×10^{1}	1.1×10^{3}	2.2×10^{5}	5.9×10^{6}
Co-60		4.0×10^{-1}	1.1×10^{1}	4.0×10^{-1}	1.1×10^{1}	4.2×10^{1}	1.1×10^{3}
Cr-51	Chromium (24)	3.0×10^{1}	8.1×10^{2}	3.0×10^{1}	8.1×10^{2}	3.4×10^{3}	9.2×10^{4}
Cs-129	Cesium (55)	4.0	1.1×10^{2}	4.0	1.1×10^{2}	2.8×10^{4}	7.6×10^{5}
Cs-131		3.0×10^{1}	8.1×10^{2}	3.0×10^{1}	8.1×10^{2}	3.8×10^{3}	1.0×10^{5}
Cs-132		1.0	2.7×10^{1}	1.0	2.7×10^{1}	5.7×10^{3}	1.5×10^{5}
Cs-134		7.0×10^{-1}	1.9×10^{1}	7.0×10^{-1}	1.9×10^{1}	4.8×10^{1}	1.3×10^{3}
Cs-134m		4.0×10^{1}	1.1×10^{3}	6.0×10^{-1}	1.6×10^{1}	3.0×10^{5}	8.0×10^{6}
Cs-135		4.0×10^{1}	1.1×10^{3}	1.0	2.7×10^{1}	4.3×10^{-5}	1.2×10^{-3}
Cs-136		5.0×10^{-1}	1.4×10^{1}	5.0×10^{-1}	1.4×10^{1}	2.7×10^{3}	7.3×10^{4}
Cs-137 (a)		2.0	5.4×10^{1}	6.0×10^{-1}	1.6×10^{1}	3.2	8.7×10^{1}
Cu-64	Copper (29)	6.0	1.6×10^{2}	1.0	2.7×10^{1}	1.4×10^{5}	3.9×10^{6}
Cu-67		1.0×10^{1}	2.7×10^{2}	7.0×10^{-1}	1.9×10^{1}	2.8×10^{4}	7.6×10^{5}

ED_001691B_00009240

Symbol of radionuclide	Element and atomic number	A_1 (TBq)	A_1 (Ci) [b]	A_2 (TBq)	A_2 (Ci) [b]	Specific activity	
						(TBq/g)	(Ci/g)
Dy-159	Dysprosium (66)	2.0×10^{1}	5.4×10^{2}	2.0×10^{1}	5.4×10^{2}	2.1×10^{2}	5.7×10^{3}
Dy-165		9.0×10^{-1}	2.4×10^{1}	6.0×10^{-1}	1.6×10^{1}	3.0×10^{5}	8.2×10^{6}
Dy-166 (a)		9.0×10^{-1}	2.4×10^{1}	3.0×10^{-1}	8.1	8.6×10^{3}	2.3×10^{5}
Er-169	Erbium (68)	4.0×10^{1}	1.1×10^{3}	1.0	2.7×10^{1}	3.1×10^{3}	8.3×10^{4}
Er-171		8.0×10^{-1}	2.2×10^{1}	5.0×10^{-1}	1.4×10^{1}	9.0×10^{4}	2.4×10^{6}
Eu-147	Europium (63)	2.0	5.4×10^{1}	2.0	5.4×10^{1}	1.4×10^{3}	3.7×10^{4}
Eu-148		5.0×10^{-1}	1.4×10^{1}	5.0×10^{-1}	1.4×10^{1}	6.0×10^{2}	1.6×10^{4}
Eu-149		2.0×10^{1}	5.4×10^{2}	2.0×10^{1}	5.4×10^{2}	3.5×10^{2}	9.4×10^{3}
Eu-150 (short lived)		2.0	5.4×10^{1}	7.0×10^{-1}	1.9×10^{1}	6.1×10^{4}	1.6×10^{6}
Eu-150 (long lived)		7.0×10^{-1}	1.9×10^{1}	7.0×10^{-1}	1.9×10^{1}	6.1×10^{4}	1.6×10^{6}
Eu-152		1.0	2.7×10^{1}	1.0	2.7×10^{1}	6.5	1.8×10^{2}
Eu-152m		8.0×10^{-1}	2.2×10^{1}	8.0×10^{-1}	2.2×10^{1}	8.2×10^{4}	2.2×10^{6}
Eu-154		9.0×10^{-1}	2.4×10^{1}	6.0×10^{-1}	1.6×10^{1}	9.8	2.6×10^{2}
Eu-155		2.0×10^{1}	5.4×10^{2}	3.0	8.1×10^{1}	1.8×10^{1}	4.9×10^{2}
Eu-156		7.0×10^{-1}	1.9×10^{1}	7.0×10^{-1}	1.9×10^{1}	2.0×10^{3}	5.5×10^{4}
F-18	Fluorine (9)	1.0	2.7×10^{1}	6.0×10^{-1}	1.6×10^{1}	3.5×10^{6}	9.5×10^{7}
Fe-52 (a)	Iron (26)	3.0×10^{-1}	8.1	3.0×10^{-1}	8.1	2.7×10^{5}	7.3×10^{6}
Fe-55		4.0×10^{1}	1.1×10^{3}	4.0×10^{1}	1.1×10^{3}	8.8×10^{1}	2.4×10^{3}
Fe-59		9.0×10^{-1}	2.4×10^{1}	9.0×10^{-1}	2.4×10^{1}	1.8×10^{3}	5.0×10^{4}
Fe-60 (a)		4.0×10^{1}	1.1×10^{3}	2.0×10^{-1}	5.4	7.4×10^{-4}	2.0×10^{-2}
Ga-67	Gallium (31)	7.0	1.9×10^{2}	3.0	8.1×10^{1}	2.2×10^{4}	6.0×10^{5}
Ga-68		5.0×10^{-1}	1.4×10^{1}	5.0×10^{-1}	1.4×10^{1}	1.5×10^{6}	4.1×10^{7}
Ga-72		4.0×10^{-1}	1.1×10^{1}	4.0×10^{-1}	1.1×10^{1}	1.1×10^{5}	3.1×10^{6}
Gd-146 (a)	Gadolinium (64)	5.0×10^{-1}	1.4×10^{1}	5.0×10^{-1}	1.4×10^{1}	6.9×10^{2}	1.9×10^{4}
Gd-148		2.0×10^{1}	5.4×10^{2}	2.0×10^{-3}	5.4×10^{-2}	1.2	3.2×10^{1}
Gd-153		1.0×10^{1}	2.7×10^{2}	9.0	2.4×10^{2}	1.3×10^{2}	3.5×10^{3}
Gd-159		3.0	8.1×10^{1}	6.0×10^{-1}	1.6×10^{1}	3.9×10^{4}	1.1×10^{6}
Ge-68 (a)	Germanium (32)	5.0×10^{-1}	1.4×10^{1}	5.0×10^{-1}	1.4×10^{1}	2.6×10^{2}	7.1×10^{3}
Ge-71		4.0×10^{1}	1.1×10^{3}	4.0×10^{1}	1.1×10^{3}	5.8×10^{3}	1.6×10^{5}
Ge-77		3.0×10^{-1}	8.1	3.0×10^{-1}	8.1	1.3×10^{5}	3.6×10^{6}
Hf-172 (a)	Hafnium (72)	6.0×10^{-1}	1.6×10^{1}	6.0×10^{-1}	1.6×10^{1}	4.1×10^{1}	1.1×10^{3}
Hf-175		3.0	8.1×10^{1}	3.0	8.1×10^{1}	3.9×10^{2}	1.1×10^{4}
Hf-181		2.0	5.4×10^{1}	5.0×10^{-1}	1.4×10^{1}	6.3×10^{2}	1.7×10^{4}
Hf-182		Unlimited	Unlimited	Unlimited	Unlimited	8.1×10^{-6}	2.2×10^{-4}
Hg-194 (a)	Mercury (80)	1.0	2.7×10^{1}	1.0	2.7×10^{1}	1.3×10^{-1}	3.5
Hg-195m (a)		3.0	8.1×10^{1}	7.0×10^{-1}	1.9×10^{1}	1.5×10^{4}	4.0×10^{5}
Hg-197		2.0×10^{1}	5.4×10^{2}	1.0×10^{1}	2.7×10^{2}	9.2×10^{3}	2.5×10^{5}
Hg-197m		1.0×10^{1}	2.7×10^{2}	4.0×10^{-1}	1.1×10^{1}	2.5×10^{4}	6.7×10^{5}
Hg-203		5.0	1.4×10^{2}	1.0	2.7×10^{1}	5.1×10^{2}	1.4×10^{4}
Ho-166	Holmium (67)	4.0×10^{-1}	1.1×10^{1}	4.0×10^{-1}	1.1×10^{1}	2.6×10^{4}	7.0×10^{5}
Ho-166m		6.0×10^{-1}	1.6×10^{1}	5.0×10^{-1}	1.4×10^{1}	6.6×10^{-2}	1.8
I-123	Iodine (53)	6.0	1.6×10^{2}	3.0	8.1×10^{1}	7.1×10^{4}	1.9×10^{6}
I-124		1.0	2.7×10^{1}	1.0	2.7×10^{1}	9.3×10^{3}	2.5×10^{5}
I-125		2.0×10^{1}	5.4×10^{2}	3.0	8.1×10^{1}	6.4×10^{2}	1.7×10^{4}
I-126		2.0	5.4×10^{1}	1.0	2.7×10^{1}	2.9×10^{3}	8.0×10^{4}
I-129		Unlimited	Unlimited	Unlimited	Unlimited	6.5×10^{-6}	1.8×10^{-4}

ED_001691B_00009240

Symbol of radionuclide	Element and atomic number	A_1 (TBq)	A_1 (Ci) [b]	A_2 (TBq)	A_2 (Ci) [b]	Specific activity	
						(TBq/g)	(Ci/g)
I-131		3.0	8.1×10^{1}	7.0×10^{-1}	1.9×10^{1}	4.6×10^{3}	1.2×10^{5}
I-132		4.0×10^{-1}	1.1×10^{1}	4.0×10^{-1}	1.1×10^{1}	3.8×10^{5}	1.0×10^{7}
I-133		7.0×10^{-1}	1.9×10^{1}	6.0×10^{-1}	1.6×10^{1}	4.2×10^{4}	1.1×10^{6}
I-134		3.0×10^{-1}	8.1	3.0×10^{-1}	8.1	9.9×10^{5}	2.7×10^{7}
I-135 (a)		6.0×10^{-1}	1.6×10^{1}	6.0×10^{-1}	1.6×10^{1}	1.3×10^{5}	3.5×10^{6}
In-111	Indium (49)	3.0	8.1×10^{1}	3.0	8.1×10^{1}	1.5×10^{4}	4.2×10^{5}
In-113m		4.0	1.1×10^{2}	2.0	5.4×10^{1}	6.2×10^{5}	1.7×10^{7}
In-114m (a)		1.0×10^{1}	2.7×10^{2}	5.0×10^{-1}	1.4×10^{1}	8.6×10^{2}	2.3×10^{4}
In-115m		7.0	1.9×10^{2}	1.0	2.7×10^{1}	2.2×10^{5}	6.1×10^{6}
Ir-189 (a)	Iridium (77)	1.0×10^{1}	2.7×10^{2}	1.0×10^{1}	2.7×10^{2}	1.9×10^{3}	5.2×10^{4}
Ir-190		7.0×10^{-1}	1.9×10^{1}	7.0×10^{-1}	1.9×10^{1}	2.3×10^{3}	6.2×10^{4}
Ir-192 (c)		1.0	2.7×10^{1}	6.0×10^{-1}	1.6×10^{1}	3.4×10^{2}	9.2×10^{3}
Ir-194		3.0×10^{-1}	8.1	3.0×10^{-1}	8.1	3.1×10^{4}	8.4×10^{5}
K-40	Potassium (19)	9.0×10^{-1}	2.4×10^{1}	9.0×10^{-1}	2.4×10^{1}	2.4×10^{-7}	6.4×10^{-6}
K-42		2.0×10^{-1}	5.4	2.0×10^{-1}	5.4	2.2×10^{5}	6.0×10^{6}
K-43		7.0×10^{-1}	1.9×10^{1}	6.0×10^{-1}	1.6×10^{1}	1.2×10^{5}	3.3×10^{6}
Kr-79	Krypton (36)	4.0×10^{0}	1.1×10^{2}	2.0×10^{0}	5.4×10^{1}	4.2×10^{4}	1.1×10^{6}
Kr-81	Krypton (36)	4.0×10^{1}	1.1×10^{3}	4.0×10^{1}	1.1×10^{3}	7.8×10^{-4}	2.1×10^{-2}
Kr-85		1.0×10^{1}	2.7×10^{2}	1.0×10^{1}	2.7×10^{2}	1.5×10^{1}	3.9×10^{2}
Kr-85m		8.0	2.2×10^{2}	3.0	8.1×10^{1}	3.0×10^{5}	8.2×10^{6}
Kr-87		2.0×10^{-1}	5.4	2.0×10^{-1}	5.4	1.0×10^{6}	2.8×10^{7}
La-137	Lanthanum (57)	3.0×10^{1}	8.1×10^{2}	6.0	1.6×10^{2}	1.6×10^{-3}	4.4×10^{-2}
La-140		4.0×10^{-1}	1.1×10^{1}	4.0×10^{-1}	1.1×10^{1}	2.1×10^{4}	5.6×10^{5}
Lu-172	Lutetium (71)	6.0×10^{-1}	1.6×10^{1}	6.0×10^{-1}	1.6×10^{1}	4.2×10^{3}	1.1×10^{5}
Lu-173		8.0	2.2×10^{2}	8.0	2.2×10^{2}	5.6×10^{1}	1.5×10^{3}
Lu-174		9.0	2.4×10^{2}	9.0	2.4×10^{2}	2.3×10^{1}	6.2×10^{2}
Lu-174m		2.0×10^{1}	5.4×10^{2}	1.0×10^{1}	2.7×10^{2}	2.0×10^{2}	5.3×10^{3}
Lu-177		3.0×10^{1}	8.1×10^{2}	7.0×10^{-1}	1.9×10^{1}	4.1×10^{3}	1.1×10^{5}
Mg-28 (a)	Magnesium (12)	3.0×10^{-1}	8.1	3.0×10^{-1}	8.1	2.0×10^{5}	5.4×10^{6}
Mn-52	Manganese (25)	3.0×10^{-1}	8.1	3.0×10^{-1}	8.1	1.6×10^{4}	4.4×10^{5}
Mn-53		Unlimited	Unlimited	Unlimited	Unlimited	6.8×10^{-5}	1.8×10^{-3}
Mn-54		1.0	2.7×10^{1}	1.0	2.7×10^{1}	2.9×10^{2}	7.7×10^{3}
Mn-56		3.0×10^{-1}	8.1	3.0×10^{-1}	8.1	8.0×10^{5}	2.2×10^{7}
Mo-93	Molybdenum (42)	4.0×10^{1}	1.1×10^{3}	2.0×10^{1}	5.4×10^{2}	4.1×10^{-2}	1.1
Mo-99(a)(i)		1.0	2.7×10^{1}	6.0×10^{-1}	1.6×10^{1}	1.8×10^{4}	4.8×10^{5}
N-13	Nitrogen (7)	9.0×10^{-1}	2.4×10^{1}	6.0×10^{-1}	1.6×10^{1}	5.4×10^{7}	1.5×10^{9}
Na-22	Sodium (11)	5.0×10^{-1}	1.4×10^{1}	5.0×10^{-1}	1.4×10^{1}	2.3×10^{2}	6.3×10^{3}
Na-24		2.0×10^{-1}	5.4	2.0×10^{-1}	5.4	3.2×10^{5}	8.7×10^{6}
Nb-93m	Niobium (41)	4.0×10^{1}	1.1×10^{3}	3.0×10^{1}	8.1×10^{2}	8.8	2.4×10^{2}
Nb-94		7.0×10^{-1}	1.9×10^{1}	7.0×10^{-1}	1.9×10^{1}	6.9×10^{-3}	1.9×10^{-1}
Nb-95		1.0	2.7×10^{1}	1.0	2.7×10^{1}	1.5×10^{3}	3.9×10^{4}
Nb-97		9.0×10^{-1}	2.4×10^{1}	6.0×10^{-1}	1.6×10^{1}	9.9×10^{5}	2.7×10^{7}
Nd-147	Neodymium (60)	6.0	1.6×10^{2}	6.0×10^{-1}	1.6×10^{1}	3.0×10^{3}	8.1×10^{4}
Nd-149		6.0×10^{-1}	1.6×10^{1}	5.0×10^{-1}	1.4×10^{1}	4.5×10^{5}	1.2×10^{7}
Ni-59	Nickel (28)	Unlimited	Unlimited	Unlimited	Unlimited	3.0×10^{-3}	8.0×10^{-2}

ED_001691B_00009240

Symbol of radionuclide	Element and atomic number	A_1 (TBq)	A_1 (Ci) [b]	A_2 (TBq)	A_2 (Ci) [b]	Specific activity	
						(TBq/g)	(Ci/g)
Ni-63		4.0×10^{1}	1.1×10^{3}	3.0×10^{1}	8.1×10^{2}	2.1	5.7×10^{1}
Ni-65		4.0×10^{-1}	1.1×10^{1}	4.0×10^{-1}	1.1×10^{1}	7.1×10^{5}	1.9×10^{7}
Np-235	Neptunium (93)	4.0×10^{1}	1.1×10^{3}	4.0×10^{1}	1.1×10^{3}	5.2×10^{1}	1.4×10^{3}
Np-236 (short-lived)		2.0×10^{1}	5.4×10^{2}	2.0	5.4×10^{1}	4.7×10^{-4}	1.3×10^{-2}
Np-236 (long-lived)		9.0×10^{0}	2.4×10^{2}	2.0×10^{-2}	5.4×10^{-1}	4.7×10^{-4}	1.3×10^{-2}
Np-237		2.0×10^{1}	5.4×10^{2}	2.0×10^{-3}	5.4×10^{-2}	2.6×10^{-5}	7.1×10^{-4}
Np-239		7.0	1.9×10^{2}	4.0×10^{-1}	1.1×10^{1}	8.6×10^{3}	2.3×10^{5}
Os-185	Osmium (76)	1.0	2.7×10^{1}	1.0	2.7×10^{1}	2.8×10^{2}	7.5×10^{3}
Os-191		1.0×10^{1}	2.7×10^{2}	2.0	5.4×10^{1}	1.6×10^{3}	4.4×10^{4}
Os-191m		4.0×10^{1}	1.1×10^{3}	3.0×10^{1}	8.1×10^{2}	4.6×10^{4}	1.3×10^{6}
Os-193		2.0	5.4×10^{1}	6.0×10^{-1}	1.6×10^{1}	2.0×10^{4}	5.3×10^{5}
Os-194 (a)		3.0×10^{-1}	8.1	3.0×10^{-1}	8.1	1.1×10^{1}	3.1×10^{2}
P-32	Phosphorus (15)	5.0×10^{-1}	1.4×10^{1}	5.0×10^{-1}	1.4×10^{1}	1.1×10^{4}	2.9×10^{5}
P-33		4.0×10^{1}	1.1×10^{3}	1.0	2.7×10^{1}	5.8×10^{3}	1.6×10^{5}
Pa-230 (a)	Protactinium (91)	2.0	5.4×10^{1}	7.0×10^{-2}	1.9	1.2×10^{3}	3.3×10^{4}
Pa-231		4.0	1.1×10^{2}	4.0×10^{-4}	1.1×10^{-2}	1.7×10^{-3}	4.7×10^{-2}
Pa-233		5.0	1.4×10^{2}	7.0×10^{-1}	1.9×10^{1}	7.7×10^{2}	2.1×10^{4}
Pb-201	Lead (82)	1.0	2.7×10^{1}	1.0	2.7×10^{1}	6.2×10^{4}	1.7×10^{6}
Pb-202		4.0×10^{1}	1.1×10^{3}	2.0×10^{1}	5.4×10^{2}	1.2×10^{-4}	3.4×10^{-3}
Pb-203		4.0	1.1×10^{2}	3.0	8.1×10^{1}	1.1×10^{4}	3.0×10^{5}
Pb-205		Unlimited	Unlimited	Unlimited	Unlimited	4.5×10^{-6}	1.2×10^{-4}
Pb-210 (a)		1.0	2.7×10^{1}	5.0×10^{-2}	1.4	2.8	7.6×10^{1}
Pb-212 (a)		7.0×10^{-1}	1.9×10^{1}	2.0×10^{-1}	5.4	5.1×10^{4}	1.4×10^{6}
Pd-103 (a)	Palladium (46)	4.0×10^{1}	1.1×10^{3}	4.0×10^{1}	1.1×10^{3}	2.8×10^{3}	7.5×10^{4}
Pd-107		Unlimited	Unlimited	Unlimited	Unlimited	1.9×10^{-5}	5.1×10^{-4}
Pd-109		2.0	5.4×10^{1}	5.0×10^{-1}	1.4×10^{1}	7.9×10^{4}	2.1×10^{6}
Pm-143	Promethium (61)	3.0	8.1×10^{1}	3.0	8.1×10^{1}	1.3×10^{2}	3.4×10^{3}
Pm-144		7.0×10^{-1}	1.9×10^{1}	7.0×10^{-1}	1.9×10^{1}	9.2×10^{1}	2.5×10^{3}
Pm-145		3.0×10^{1}	8.1×10^{2}	1.0×10^{1}	2.7×10^{2}	5.2	1.4×10^{2}
Pm-147		4.0×10^{1}	1.1×10^{3}	2.0	5.4×10^{1}	3.4×10^{1}	9.3×10^{2}
Pm-148m (a)		8.0×10^{-1}	2.2×10^{1}	7.0×10^{-1}	1.9×10^{1}	7.9×10^{2}	2.1×10^{4}
Pm-149		2.0	5.4×10^{1}	6.0×10^{-1}	1.6×10^{1}	1.5×10^{4}	4.0×10^{5}
Pm-151		2.0	5.4×10^{1}	6.0×10^{-1}	1.6×10^{1}	2.7×10^{4}	7.3×10^{5}
Po-210	Polonium (84)	4.0×10^{1}	1.1×10^{3}	2.0×10^{-2}	5.4×10^{-1}	1.7×10^{2}	4.5×10^{3}
Pr-142	Praseodymium (59)	4.0×10^{-1}	1.1×10^{1}	4.0×10^{-1}	1.1×10^{1}	4.3×10^{4}	1.2×10^{6}
Pr-143		3.0	8.1×10^{1}	6.0×10^{-1}	1.6×10^{1}	2.5×10^{3}	6.7×10^{4}
Pt-188 (a)	Platinum (78)	1.0	2.7×10^{1}	8.0×10^{-1}	2.2×10^{1}	2.5×10^{3}	6.8×10^{4}
Pt-191		4.0	1.1×10^{2}	3.0	8.1×10^{1}	8.7×10^{3}	2.4×10^{5}
Pt-193		4.0×10^{1}	1.1×10^{3}	4.0×10^{1}	1.1×10^{3}	1.4	3.7×10^{1}
Pt-193m		4.0×10^{1}	1.1×10^{3}	5.0×10^{-1}	1.4×10^{1}	5.8×10^{3}	1.6×10^{5}
Pt-195m		1.0×10^{1}	2.7×10^{2}	5.0×10^{-1}	1.4×10^{1}	6.2×10^{3}	1.7×10^{5}
Pt-197		2.0×10^{1}	5.4×10^{2}	6.0×10^{-1}	1.6×10^{1}	3.2×10^{4}	8.7×10^{5}
Pt-197m		1.0×10^{1}	2.7×10^{2}	6.0×10^{-1}	1.6×10^{1}	3.7×10^{5}	1.0×10^{7}
Pu-236	Plutonium (94)	3.0×10^{1}	8.1×10^{2}	3.0×10^{-3}	8.1×10^{-2}	2.0×10^{1}	5.3×10^{2}
Pu-237		2.0×10^{1}	5.4×10^{2}	2.0×10^{1}	5.4×10^{2}	4.5×10^{2}	1.2×10^{4}
Pu-238		1.0×10^{1}	2.7×10^{2}	1.0×10^{-3}	2.7×10^{-2}	6.3×10^{-1}	1.7×10^{1}

ED_001691B_00009240

Symbol of radionuclide	Element and atomic number	A_1 (TBq)	A_1 (Ci) [b]	A_2 (TBq)	A_2 (Ci) [b]	Specific activity	
						(TBq/g)	(Ci/g)
Pu-239		1.0×10^{1}	2.7×10^{2}	1.0×10^{-3}	2.7×10^{-2}	2.3×10^{-3}	6.2×10^{-2}
Pu-240		1.0×10^{1}	2.7×10^{2}	1.0×10^{-3}	2.7×10^{-2}	8.4×10^{-3}	2.3×10^{-1}
Pu-241 (a)		4.0×10^{1}	1.1×10^{3}	6.0×10^{-2}	1.6	3.8	1.0×10^{2}
Pu-242		1.0×10^{1}	2.7×10^{2}	1.0×10^{-3}	2.7×10^{-2}	1.5×10^{-4}	3.9×10^{-3}
Pu-244 (a)		4.0×10^{-1}	1.1×10^{1}	1.0×10^{-3}	2.7×10^{-2}	6.7×10^{-7}	1.8×10^{-5}
Ra-223 (a)	Radium (88)	4.0×10^{-1}	1.1×10^{1}	7.0×10^{-3}	1.9×10^{-1}	1.9×10^{3}	5.1×10^{4}
Ra-224 (a)		4.0×10^{-1}	1.1×10^{1}	2.0×10^{-2}	5.4×10^{-1}	5.9×10^{3}	1.6×10^{5}
Ra-225 (a)		2.0×10^{-1}	5.4	4.0×10^{-3}	1.1×10^{-1}	1.5×10^{3}	3.9×10^{4}
Ra-226 (a)		2.0×10^{-1}	5.4	3.0×10^{-3}	8.1×10^{-2}	3.7×10^{-2}	1.0
Ra-228 (a)		6.0×10^{-1}	1.6×10^{1}	2.0×10^{-2}	5.4×10^{-1}	1.0×10^{1}	2.7×10^{2}
Rb-81	Rubidium (37)	2.0	5.4×10^{1}	8.0×10^{-1}	2.2×10^{1}	3.1×10^{5}	8.4×10^{6}
Rb-83 (a)		2.0	5.4×10^{1}	2.0	5.4×10^{1}	6.8×10^{2}	1.8×10^{4}
Rb-84		1.0	2.7×10^{1}	1.0	2.7×10^{1}	1.8×10^{3}	4.7×10^{4}
Rb-86		5.0×10^{-1}	1.4×10^{1}	5.0×10^{-1}	1.4×10^{1}	3.0×10^{3}	8.1×10^{4}
Rb-87		Unlimited	Unlimited	Unlimited	Unlimited	3.2×10^{-9}	8.6×10^{-8}
Rb(nat)		Unlimited	Unlimited	Unlimited	Unlimited	6.7×10^{6}	1.8×10^{8}
Re-184	Rhenium (75)	1.0	2.7×10^{1}	1.0	2.7×10^{1}	6.9×10^{2}	1.9×10^{4}
Re-184m		3.0	8.1×10^{1}	1.0	2.7×10^{1}	1.6×10^{2}	4.3×10^{3}
Re-186		2.0	5.4×10^{1}	6.0×10^{-1}	1.6×10^{1}	6.9×10^{3}	1.9×10^{5}
Re-187		Unlimited	Unlimited	Unlimited	Unlimited	1.4×10^{-9}	3.8×10^{-8}
Re-188		4.0×10^{-1}	1.1×10^{1}	4.0×10^{-1}	1.1×10^{1}	3.6×10^{4}	9.8×10^{5}
Re-189 (a)		3.0	8.1×10^{1}	6.0×10^{-1}	1.6×10^{1}	2.5×10^{4}	6.8×10^{5}
Re(nat)		Unlimited	Unlimited	Unlimited	Unlimited	0.0	2.4×10^{-8}
Rh-99	Rhodium (45)	2.0	5.4×10^{1}	2.0	5.4×10^{1}	3.0×10^{3}	8.2×10^{4}
Rh-101		4.0	1.1×10^{2}	3.0	8.1×10^{1}	4.1×10^{1}	1.1×10^{3}
Rh-102		5.0×10^{-1}	1.4×10^{1}	5.0×10^{-1}	1.4×10^{1}	4.5×10^{1}	1.2×10^{3}
Rh-102m		2.0	5.4×10^{1}	2.0	5.4×10^{1}	2.3×10^{2}	6.2×10^{3}
Rh-103m		4.0×10^{1}	1.1×10^{3}	4.0×10^{1}	1.1×10^{3}	1.2×10^{6}	3.3×10^{7}
Rh-105		1.0×10^{1}	2.7×10^{2}	8.0×10^{-1}	2.2×10^{1}	3.1×10^{4}	8.4×10^{5}
Rn-222 (a)	Radon (86)	3.0×10^{-1}	8.1	4.0×10^{-3}	1.1×10^{-1}	5.7×10^{3}	1.5×10^{5}
Ru-97	Ruthenium (44)	5.0	1.4×10^{2}	5.0	1.4×10^{2}	1.7×10^{4}	4.6×10^{5}
Ru-103 (a)		2.0	5.4×10^{1}	2.0	5.4×10^{1}	1.2×10^{3}	3.2×10^{4}
Ru-105		1.0	2.7×10^{1}	6.0×10^{-1}	1.6×10^{1}	2.5×10^{5}	6.7×10^{6}
Ru-106 (a)		2.0×10^{-1}	5.4	2.0×10^{-1}	5.4	1.2×10^{2}	3.3×10^{3}
S-35	Sulphur (16)	4.0×10^{1}	1.1×10^{3}	3.0	8.1×10^{1}	1.6×10^{3}	4.3×10^{4}
Sb-122	Antimony (51)	4.0×10^{-1}	1.1×10^{1}	4.0×10^{-1}	1.1×10^{1}	1.5×10^{4}	4.0×10^{5}
Sb-124		6.0×10^{-1}	1.6×10^{1}	6.0×10^{-1}	1.6×10^{1}	6.5×10^{2}	1.7×10^{4}
Sb-125		2.0	5.4×10^{1}	1.0	2.7×10^{1}	3.9×10^{1}	1.0×10^{3}
Sb-126		4.0×10^{-1}	1.1×10^{1}	4.0×10^{-1}	1.1×10^{1}	3.1×10^{3}	8.4×10^{4}
Sc-44	Scandium (21)	5.0×10^{-1}	1.4×10^{1}	5.0×10^{-1}	1.4×10^{1}	6.7×10^{5}	1.8×10^{7}
Sc-46		5.0×10^{-1}	1.4×10^{1}	5.0×10^{-1}	1.4×10^{1}	1.3×10^{3}	3.4×10^{4}
Sc-47		1.0×10^{1}	2.7×10^{2}	7.0×10^{-1}	1.9×10^{1}	3.1×10^{4}	8.3×10^{5}
Sc-48		3.0×10^{-1}	8.1	3.0×10^{-1}	8.1	5.5×10^{4}	1.5×10^{6}
Se-75	Selenium (34)	3.0	8.1×10^{1}	3.0	8.1×10^{1}	5.4×10^{2}	1.5×10^{4}
Se-79		4.0×10^{1}	1.1×10^{3}	2.0	5.4×10^{1}	2.6×10^{-3}	7.0×10^{-2}

ED_001691B_00009240

Symbol of radionuclide	Element and atomic number	A_1 (TBq)	A_1 (Ci) [b]	A_2 (TBq)	A_2 (Ci) [b]	Specific activity	
						(TBq/g)	(Ci/g)
Si-31	Silicon (14)	6.0×10^{-1}	1.6×10^{1}	6.0×10^{-1}	1.6×10^{1}	1.4×10^{6}	3.9×10^{7}
Si-32		4.0×10^{1}	1.1×10^{3}	5.0×10^{-1}	1.4×10^{1}	3.9	1.1×10^{2}
Sm-145	Samarium (62)	1.0×10^{1}	2.7×10^{2}	1.0×10^{1}	2.7×10^{2}	9.8×10^{1}	2.6×10^{3}
Sm-147		Unlimited	Unlimited	Unlimited	Unlimited	8.5×10^{-10}	2.3×10^{-8}
Sm-151		4.0×10^{1}	1.1×10^{3}	1.0×10^{1}	2.7×10^{2}	9.7×10^{-1}	2.6×10^{1}
Sm-153		9.0	2.4×10^{2}	6.0×10^{-1}	1.6×10^{1}	1.6×10^{4}	4.4×10^{5}
Sn-113 (a)	Tin (50)	4.0	1.1×10^{2}	2.0	5.4×10^{1}	3.7×10^{2}	1.0×10^{4}
Sn-117m		7.0	1.9×10^{2}	4.0×10^{-1}	1.1×10^{1}	3.0×10^{3}	8.2×10^{4}
Sn-119m		4.0×10^{1}	1.1×10^{3}	3.0×10^{1}	8.1×10^{2}	1.4×10^{2}	3.7×10^{3}
Sn-121m (a)		4.0×10^{1}	1.1×10^{3}	9.0×10^{-1}	2.4×10^{1}	2.0	5.4×10^{1}
Sn-123		8.0×10^{-1}	2.2×10^{1}	6.0×10^{-1}	1.6×10^{1}	3.0×10^{2}	8.2×10^{3}
Sn-125		4.0×10^{-1}	1.1×10^{1}	4.0×10^{-1}	1.1×10^{1}	4.0×10^{3}	1.1×10^{5}
Sn-126 (a)		6.0×10^{-1}	1.6×10^{1}	4.0×10^{-1}	1.1×10^{1}	1.0×10^{-3}	2.8×10^{-2}
Sr-82 (a)	Strontium (38)	2.0×10^{-1}	5.4	2.0×10^{-1}	5.4	2.3×10^{3}	6.2×10^{4}
Sr-85		2.0	5.4×10^{1}	2.0	5.4×10^{1}	8.8×10^{2}	2.4×10^{4}
Sr-85m		5.0	1.4×10^{2}	5.0	1.4×10^{2}	1.2×10^{6}	3.3×10^{7}
Sr-87m		3.0	8.1×10^{1}	3.0	8.1×10^{1}	4.8×10^{5}	1.3×10^{7}
Sr-89		6.0×10^{-1}	1.6×10^{1}	6.0×10^{-1}	1.6×10^{1}	1.1×10^{3}	2.9×10^{4}
Sr-90 (a)		3.0×10^{-1}	8.1	3.0×10^{-1}	8.1	5.1	1.4×10^{2}
Sr-91 (a)		3.0×10^{-1}	8.1	3.0×10^{-1}	8.1	1.3×10^{5}	3.6×10^{6}
Sr-92 (a)		1.0	2.7×10^{1}	3.0×10^{-1}	8.1	4.7×10^{5}	1.3×10^{7}
T(H-3)	Tritium (1)	4.0×10^{1}	1.1×10^{3}	4.0×10^{1}	1.1×10^{3}	3.6×10^{2}	9.7×10^{3}
Ta-178 (long-lived)	Tantalum (73)	1.0	2.7×10^{1}	8.0×10^{-1}	2.2×10^{1}	4.2×10^{6}	1.1×10^{8}
Ta-179		3.0×10^{1}	8.1×10^{2}	3.0×10^{1}	8.1×10^{2}	4.1×10^{1}	1.1×10^{3}
Ta-182		9.0×10^{-1}	2.4×10^{1}	5.0×10^{-1}	1.4×10^{1}	2.3×10^{2}	6.2×10^{3}
Tb-157	Terbium (65)	4.0×10^{1}	1.1×10^{3}	4.0×10^{1}	1.1×10^{3}	5.6×10^{-1}	1.5×10^{1}
Tb-158		1.0	2.7×10^{1}	1.0	2.7×10^{1}	5.6×10^{-1}	1.5×10^{1}
Tb-160		1.0	2.7×10^{1}	6.0×10^{-1}	1.6×10^{1}	4.2×10^{2}	1.1×10^{4}
Tc-95m (a)	Technetium (43)	2.0	5.4×10^{1}	2.0	5.4×10^{1}	8.3×10^{2}	2.2×10^{4}
Tc-96		4.0×10^{-1}	1.1×10^{1}	4.0×10^{-1}	1.1×10^{1}	1.2×10^{4}	3.2×10^{5}
Tc-96m (a)		4.0×10^{-1}	1.1×10^{1}	4.0×10^{-1}	1.1×10^{1}	1.4×10^{6}	3.8×10^{7}
Tc-97		Unlimited	Unlimited	Unlimited	Unlimited	5.2×10^{-5}	1.4×10^{-3}
Tc-97m		4.0×10^{1}	1.1×10^{3}	1.0	2.7×10^{1}	5.6×10^{2}	1.5×10^{4}
Tc-98		8.0×10^{-1}	2.2×10^{1}	7.0×10^{-1}	1.9×10^{1}	3.2×10^{-5}	8.7×10^{-4}
Tc-99		4.0×10^{1}	1.1×10^{3}	9.0×10^{-1}	2.4×10^{1}	6.3×10^{-4}	1.7×10^{-2}
Tc-99m		1.0×10^{1}	2.7×10^{2}	4.0	1.1×10^{2}	1.9×10^{5}	5.3×10^{6}
Te-121	Tellurium (52)	2.0	5.4×10^{1}	2.0	5.4×10^{1}	2.4×10^{3}	6.4×10^{4}
Te-121m		5.0	1.4×10^{2}	3.0	8.1×10^{1}	2.6×10^{2}	7.0×10^{3}
Te-123m		8.0	2.2×10^{2}	1.0	2.7×10^{1}	3.3×10^{2}	8.9×10^{3}
Te-125m		2.0×10^{1}	5.4×10^{2}	9.0×10^{-1}	2.4×10^{1}	6.7×10^{2}	1.8×10^{4}
Te-127		2.0×10^{1}	5.4×10^{2}	7.0×10^{-1}	1.9×10^{1}	9.8×10^{4}	2.6×10^{6}
Te-127m (a)		2.0×10^{1}	5.4×10^{2}	5.0×10^{-1}	1.4×10^{1}	3.5×10^{2}	9.4×10^{3}
Te-129		7.0×10^{-1}	1.9×10^{1}	6.0×10^{-1}	1.6×10^{1}	7.7×10^{5}	2.1×10^{7}
Te-129m (a)		8.0×10^{-1}	2.2×10^{1}	4.0×10^{-1}	1.1×10^{1}	1.1×10^{3}	3.0×10^{4}
Te-131m (a)		7.0×10^{-1}	1.9×10^{1}	5.0×10^{-1}	1.4×10^{1}	3.0×10^{4}	8.0×10^{5}
Te-132 (a)		5.0×10^{-1}	1.4×10^{1}	4.0×10^{-1}	1.1×10^{1}	1.1×10^{4}	3.0×10^{5}

ED_001691B_00009240

Symbol of radionuclide	Element and atomic number	A_1 (TBq)	A_1 (Ci) [b]	A_2 (TBq)	A_2 (Ci) [b]	Specific activity	
						(TBq/g)	(Ci/g)
Th-227	Thorium (90)	1.0×10^{1}	2.7×10^{2}	5.0×10^{-3}	1.4×10^{-1}	1.1×10^{3}	3.1×10^{4}
Th-228 (a)		5.0×10^{-1}	1.4×10^{1}	1.0×10^{-3}	2.7×10^{-2}	3.0×10^{1}	8.2×10^{2}
Th-229		5.0	1.4×10^{2}	5.0×10^{-4}	1.4×10^{-2}	7.9×10^{-3}	2.1×10^{-1}
Th-230		1.0×10^{1}	2.7×10^{2}	1.0×10^{-3}	2.7×10^{-2}	7.6×10^{-4}	2.1×10^{-2}
Th-231		4.0×10^{1}	1.1×10^{3}	2.0×10^{-2}	5.4×10^{-1}	2.0×10^{4}	5.3×10^{5}
Th-232		Unlimited	Unlimited	Unlimited	Unlimited	4.0×10^{-9}	1.1×10^{-7}
Th-234 (a)		3.0×10^{-1}	8.1	3.0×10^{-1}	8.1	8.6×10^{2}	2.3×10^{4}
Th(nat)		Unlimited	Unlimited	Unlimited	Unlimited	8.1×10^{-9}	2.2×10^{-7}
Ti-44 (a)	Titanium (22)	5.0×10^{-1}	1.4×10^{1}	4.0×10^{-1}	1.1×10^{1}	6.4	1.7×10^{2}
Tl-200	Thallium (81)	9.0×10^{-1}	2.4×10^{1}	9.0×10^{-1}	2.4×10^{1}	2.2×10^{4}	6.0×10^{5}
Tl-201		1.0×10^{1}	2.7×10^{2}	4.0	1.1×10^{2}	7.9×10^{3}	2.1×10^{5}
Tl-202		2.0	5.4×10^{1}	2.0	5.4×10^{1}	2.0×10^{3}	5.3×10^{4}
Tl-204		1.0×10^{1}	2.7×10^{2}	7.0×10^{-1}	1.9×10^{1}	1.7×10^{1}	4.6×10^{2}
Tm-167	Thulium (69)	7.0	1.9×10^{2}	8.0×10^{-1}	2.2×10^{1}	3.1×10^{3}	8.5×10^{4}
Tm-170		3.0	8.1×10^{1}	6.0×10^{-1}	1.6×10^{1}	2.2×10^{2}	6.0×10^{3}
Tm-171		4.0×10^{1}	1.1×10^{3}	4.0×10^{1}	1.1×10^{3}	4.0×10^{1}	1.1×10^{3}
U-230 (fast lung absorption) (a)(d).	Uranium (92)	4.0×10^{1}	1.1×10^{3}	1.0×10^{-1}	2.7	1.0×10^{3}	2.7×10^{4}
U-230 (medium lung absorption) (a)(e).		4.0×10^{1}	1.1×10^{3}	4.0×10^{-3}	1.1×10^{-1}	1.0×10^{3}	2.7×10^{4}
U-230 (slow lung absorption) (a)(f).		3.0×10^{1}	8.1×10^{2}	3.0×10^{-3}	8.1×10^{-2}	1.0×10^{3}	2.7×10^{4}
U-232 (fast lung absorption) (d).		4.0×10^{1}	1.1×10^{3}	1.0×10^{-2}	2.7×10^{-1}	8.3×10^{-1}	2.2×10^{1}
U-232 (medium lung absorption) (e).		4.0×10^{1}	1.1×10^{3}	7.0×10^{-3}	1.9×10^{-1}	8.3×10^{-1}	2.2×10^{1}
U-232 (slow lung absorption) (f).		1.0×10^{1}	2.7×10^{2}	1.0×10^{-3}	2.7×10^{-2}	8.3×10^{-1}	2.2×10^{1}
U-233 (fast lung absorption) (d).		4.0×10^{1}	1.1×10^{3}	9.0×10^{-2}	2.4	3.6×10^{-4}	9.7×10^{-3}
U-233 (medium lung absorption) (e).		4.0×10^{1}	1.1×10^{3}	2.0×10^{-2}	5.4×10^{-1}	3.6×10^{-4}	9.7×10^{-3}
U-233 (slow lung absorption) (f).		4.0×10^{1}	1.1×10^{3}	6.0×10^{-3}	1.6×10^{-1}	3.6×10^{-4}	9.7×10^{-3}
U-234 (fast lung absorption) (d).		4.0×10^{1}	1.1×10^{3}	9.0×10^{-2}	2.4	2.3×10^{-4}	6.2×10^{-3}
U-234 (medium lung absorption) (e).		4.0×10^{1}	1.1×10^{3}	2.0×10^{-2}	5.4×10^{-1}	2.3×10^{-4}	6.2×10^{-3}
U-234 (slow lung absorption) (f).		4.0×10^{1}	1.1×10^{3}	6.0×10^{-3}	1.6×10^{-1}	2.3×10^{-4}	6.2×10^{-3}
U-235 (all lung absorption types) (a),(d),(e),(f).		Unlimited	Unlimited	Unlimited	Unlimited	8.0×10^{-8}	2.2×10^{-6}
U-236 (fast lung absorption) (d).		Unlimited	Unlimited	Unlimited	Unlimited	2.4×10^{-6}	6.5×10^{-5}
U-236 (medium lung absorption) (e).		4.0×10^{1}	1.1×10^{3}	2.0×10^{-2}	5.4×10^{-1}	2.4×10^{-6}	6.5×10^{-5}
U-236 (slow lung absorption) (f).		4.0×10^{1}	1.1×10^{3}	6.0×10^{-3}	1.6×10^{-1}	2.4×10^{-6}	6.5×10^{-5}
U-238 (all lung absorption types) (d),(e),(f).		Unlimited	Unlimited	Unlimited	Unlimited	1.2×10^{-8}	3.4×10^{-7}
U (nat)		Unlimited	Unlimited	Unlimited	Unlimited	2.6×10^{-8}	7.1×10^{-7}
U (enriched to 20% or less)(g).		Unlimited	Unlimited	Unlimited	Unlimited	see § 173.434	see § 173.434
U (dep)		Unlimited	Unlimited	Unlimited	Unlimited	see § 173.434	see § 173.434
V-48	Vanadium (23)	4.0×10^{-1}	1.1×10^{1}	4.0×10^{-1}	1.1×10^{1}	6.3×10^{3}	1.7×10^{5}
V-49		4.0×10^{1}	1.1×10^{3}	4.0×10^{1}	1.1×10^{3}	3.0×10^{2}	8.1×10^{3}
W-178 (a)	Tungsten (74)	9.0	2.4×10^{2}	5.0	1.4×10^{2}	1.3×10^{3}	3.4×10^{4}
W-181		3.0×10^{1}	8.1×10^{2}	3.0×10^{1}	8.1×10^{2}	2.2×10^{2}	6.0×10^{3}

ED_001691B_00009240

Symbol of radionuclide	Element and atomic number	A_1 (TBq)	A_1 (Ci) [b]	A_2 (TBq)	A_2 (Ci) [b]	Specific activity	
						(TBq/g)	(Ci/g)
W-185		4.0×10^1	1.1×10^3	8.0×10^{-1}	2.2×10^1	3.5×10^2	9.4×10^3
W-187		2.0	5.4×10^1	6.0×10^{-1}	1.6×10^1	2.6×10^4	7.0×10^5
W-188 (a)		4.0×10^{-1}	1.1×10^1	3.0×10^{-1}	8.1	3.7×10^2	1.0×10^4
Xe-122 (a)	Xenon (54)	4.0×10^{-1}	1.1×10^1	4.0×10^{-1}	1.1×10^1	4.8×10^4	1.3×10^6
Xe-123		2.0	5.4×10^1	7.0×10^{-1}	1.9×10^1	4.4×10^5	1.2×10^7
Xe-127		4.0	1.1×10^2	2.0	5.4×10^1	1.0×10^3	2.8×10^4
Xe-131m		4.0×10^1	1.1×10^3	4.0×10^1	1.1×10^3	3.1×10^3	8.4×10^4
Xe-133		2.0×10^1	5.4×10^2	1.0×10^1	2.7×10^2	6.9×10^3	1.9×10^5
Xe-135		3.0	8.1×10^1	2.0	5.4×10^1	9.5×10^4	2.6×10^6
Y-87 (a)	Yttrium (39)	1.0	2.7×10^1	1.0	2.7×10^1	1.7×10^4	4.5×10^5
Y-88		4.0×10^{-1}	1.1×10^1	4.0×10^{-1}	1.1×10^1	5.2×10^2	1.4×10^4
Y-90		3.0×10^{-1}	8.1	3.0×10^{-1}	8.1	2.0×10^4	5.4×10^5
Y-91		6.0×10^{-1}	1.6×10^1	6.0×10^{-1}	1.6×10^1	9.1×10^2	2.5×10^4
Y-91m		2.0	5.4×10^1	2.0	5.4×10^1	1.5×10^6	4.2×10^7
Y-92		2.0×10^{-1}	5.4	2.0×10^{-1}	5.4	3.6×10^5	9.6×10^6
Y-93		3.0×10^{-1}	8.1	3.0×10^{-1}	8.1	1.2×10^5	3.3×10^6
Yb-169	Ytterbium (70)	4.0	1.1×10^2	1.0	2.7×10^1	8.9×10^2	2.4×10^4
Yb-175		3.0×10^1	8.1×10^2	9.0×10^{-1}	2.4×10^1	6.6×10^3	1.8×10^5
Zn-65	Zinc (30)	2.0	5.4×10^1	2.0	5.4×10^1	3.0×10^2	8.2×10^3
Zn-69		3.0	8.1×10^1	6.0×10^{-1}	1.6×10^1	1.8×10^6	4.9×10^7
Zn-69m (a)		3.0	8.1×10^1	6.0×10^{-1}	1.6×10^1	1.2×10^5	3.3×10^6
Zr-88	Zirconium (40)	3.0	8.1×10^1	3.0	8.1×10^1	6.6×10^2	1.8×10^4
Zr-93		Unlimited	Unlimited	Unlimited	Unlimited	9.3×10^{-5}	2.5×10^{-3}
Zr-95 (a)		2.0	5.4×10^1	8.0×10^{-1}	2.2×10^1	7.9×10^2	2.1×10^4
Zr-97 (a)		4.0×10^{-1}	1.1×10^1	4.0×10^{-1}	1.1×10^1	7.1×10^4	1.9×10^6

[a] A_1 and/or A_2 values for these parent radionuclides include contributions from daughter nuclides with half-lives less than 10 days as listed in footnote (a) to Table 2 in the "IAEA Regulations for the Safe Transport of Radioactive Material, SSR–6" (IBR, see § 171.7 of this subchapter).

[b] The values of A_1 and A_2 in curies (Ci) are approximate and for information only; the regulatory standard units are Terabecquerels (TBq), (see § 171.10).

[c] The activity of Ir-192 in special form may be determined from a measurement of the rate of decay or a measurement of the radiation level at a prescribed distance from the source.

[d] These values apply only to compounds of uranium that take the chemical form of UF_6, UO_2F_2 and $UO_2(NO_3)_2$ in both normal and accident conditions of transport.

[e] These values apply only to compounds of uranium that take the chemical form of UO_3, UF_4, UCl_4 and hexavalent compounds in both normal and accident conditions of transport.

[f] These values apply to all compounds of uranium other than those specified in notes (d) and (e) of this table.

[g] These values apply to unirradiated uranium only.

[h] [Reserved]

[i] A_2 = 0.74 TBq (20 Ci) for Mo-99 for domestic use.

[69 FR 3678, Jan. 26, 2004; 69 FR 55119, Sept. 13, 2004, as amended at 71 FR 54395, Sept. 14, 2006; 77 FR 60942, Oct. 5, 2012; 79 FR 40615, July 11, 2014; 80 FR 1163, Jan. 8, 2015]

§ 173.436 Exempt material activity concentrations and exempt consignment activity limits for radionuclides.

The Table of Exempt material activity concentrations and exempt consignment activity limits for radionuclides is as follows:

Symbol of radionuclide	Element and atomic number	Activity concentration for exempt material (Bq/g)	Activity concentration for exempt material (Ci/g)	Activity limit for exempt consignment (Bq)	Activity limit for exempt consignment (Ci)
Ac-225	Actinium (89)	1.0×10^1	2.7×10^{-10}	1.0×10^4	2.7×10^{-7}
Ac-227		1.0×10^{-1}	2.7×10^{-12}	1.0×10^3	2.7×10^{-8}
Ac-228		1.0×10^1	2.7×10^{-10}	1.0×10^6	2.7×10^{-5}

ED_001691B_00009240

Symbol of radionuclide	Element and atomic number	Activity concentration for exempt material (Bq/g)	Activity concentration for exempt material (Ci/g)	Activity limit for exempt consignment (Bq)	Activity limit for exempt consignment (Ci)
Ag-105	Silver (47)	1.0×10^{2}	2.7×10^{-9}	1.0×10^{6}	2.7×10^{-5}
Ag-108m (b)		1.0×10^{1}	2.7×10^{-10}	1.0×10^{6}	2.7×10^{-5}
Ag-110m		1.0×10^{1}	2.7×10^{-10}	1.0×10^{6}	2.7×10^{-5}
Ag-111		1.0×10^{3}	2.7×10^{-8}	1.0×10^{6}	2.7×10^{-5}
Al-26	Aluminum (13)	1.0×10^{1}	2.7×10^{-10}	1.0×10^{5}	2.7×10^{-6}
Am-241	Americium (95)	1.0	2.7×10^{-11}	1.0×10^{4}	2.7×10^{-7}
Am-242m (b)		1.0	2.7×10^{-11}	1.0×10^{4}	2.7×10^{-7}
Am-243 (b)		1.0	2.7×10^{-11}	1.0×10^{3}	2.7×10^{-8}
Ar-37	Argon (18)	1.0×10^{6}	2.7×10^{-5}	1.0×10^{8}	2.7×10^{-3}
Ar-39		1.0×10^{7}	2.7×10^{-4}	1.0×10^{4}	2.7×10^{-7}
Ar-41		1.0×10^{2}	2.7×10^{-9}	1.0×10^{9}	2.7×10^{-2}
As-72	Arsenic (33)	1.0×10^{1}	2.7×10^{-10}	1.0×10^{5}	2.7×10^{-6}
As-73		1.0×10^{3}	2.7×10^{-8}	1.0×10^{7}	2.7×10^{-4}
As-74		1.0×10^{1}	2.7×10^{-10}	1.0×10^{6}	2.7×10^{-5}
As-76		1.0×10^{2}	2.7×10^{-9}	1.0×10^{5}	2.7×10^{-6}
As-77		1.0×10^{3}	2.7×10^{-8}	1.0×10^{6}	2.7×10^{-5}
At-211	Astatine (85)	1.0×10^{3}	2.7×10^{-8}	1.0×10^{7}	2.7×10^{-4}
Au-193	Gold (79)	1.0×10^{2}	2.7×10^{-9}	1.0×10^{7}	2.7×10^{-4}
Au-194		1.0×10^{1}	2.7×10^{-10}	1.0×10^{6}	2.7×10^{-5}
Au-195		1.0×10^{2}	2.7×10^{-9}	1.0×10^{7}	2.7×10^{-4}
Au-198		1.0×10^{2}	2.7×10^{-9}	1.0×10^{6}	2.7×10^{-5}
Au-199		1.0×10^{2}	2.7×10^{-9}	1.0×10^{6}	2.7×10^{-5}
Ba-131	Barium (56)	1.0×10^{2}	2.7×10^{-9}	1.0×10^{6}	2.7×10^{-5}
Ba-133		1.0×10^{2}	2.7×10^{-9}	1.0×10^{6}	2.7×10^{-5}
Ba-133m		1.0×10^{2}	2.7×10^{-9}	1.0×10^{6}	2.7×10^{-5}
Ba-140 (b)		1.0×10^{1}	2.7×10^{-10}	1.0×10^{5}	2.7×10^{-6}
Be-7	Beryllium (4)	1.0×10^{3}	2.7×10^{-8}	1.0×10^{7}	2.7×10^{-4}
Be-10		1.0×10^{4}	2.7×10^{-7}	1.0×10^{6}	2.7×10^{-5}
Bi-205	Bismuth (83)	1.0×10^{1}	2.7×10^{-10}	1.0×10^{6}	2.7×10^{-5}
Bi-206		1.0×10^{1}	2.7×10^{-10}	1.0×10^{5}	2.7×10^{-6}
Bi-207		1.0×10^{1}	2.7×10^{-10}	1.0×10^{6}	2.7×10^{-5}
Bi-210		1.0×10^{3}	2.7×10^{-8}	1.0×10^{6}	2.7×10^{-5}
Bi-210m		1.0×10^{1}	2.7×10^{-10}	1.0×10^{5}	2.7×10^{-6}
Bi-212 (b)		1.0×10^{1}	2.7×10^{-10}	1.0×10^{5}	2.7×10^{-6}
Bk-247	Berkelium (97)	1.0	2.7×10^{-11}	1.0×10^{4}	2.7×10^{-7}
Bk-249		1.0×10^{3}	2.7×10^{-8}	1.0×10^{6}	2.7×10^{-5}
Br-76	Bromine (35)	1.0×10^{1}	2.7×10^{-10}	1.0×10^{5}	2.7×10^{-6}
Br-77		1.0×10^{2}	2.7×10^{-9}	1.0×10^{6}	2.7×10^{-5}
Br-82		1.0×10^{1}	2.7×10^{-10}	1.0×10^{6}	2.7×10^{-5}
C-11	Carbon (6)	1.0×10^{1}	2.7×10^{-10}	1.0×10^{6}	2.7×10^{-5}
C-14		1.0×10^{4}	2.7×10^{-7}	1.0×10^{7}	2.7×10^{-4}
Ca-41	Calcium (20)	1.0×10^{5}	2.7×10^{-6}	1.0×10^{7}	2.7×10^{-4}
Ca-45		1.0×10^{4}	2.7×10^{-7}	1.0×10^{7}	2.7×10^{-4}
Ca-47		1.0×10^{1}	2.7×10^{-10}	1.0×10^{6}	2.7×10^{-5}
Cd-109	Cadmium (48)	1.0×10^{4}	2.7×10^{-7}	1.0×10^{6}	2.7×10^{-5}
Cd-113m		1.0×10^{3}	2.7×10^{-8}	1.0×10^{6}	2.7×10^{-5}
Cd-115		1.0×10^{2}	2.7×10^{-9}	1.0×10^{6}	2.7×10^{-5}
Cd-115m		1.0×10^{3}	2.7×10^{-8}	1.0×10^{6}	2.7×10^{-5}
Ce-139	Cerium (58)	1.0×10^{2}	2.7×10^{-9}	1.0×10^{6}	2.7×10^{-5}
Ce-141		1.0×10^{2}	2.7×10^{-9}	1.0×10^{7}	2.7×10^{-4}
Ce-143		1.0×10^{2}	2.7×10^{-9}	1.0×10^{6}	2.7×10^{-5}
Ce-144 (b)		1.0×10^{2}	2.7×10^{-9}	1.0×10^{5}	2.7×10^{-6}
Cf-248	Californium (98)	1.0×10^{1}	2.7×10^{-10}	1.0×10^{4}	2.7×10^{-7}
Cf-249		1.0	2.7×10^{-11}	1.0×10^{3}	2.7×10^{-8}
Cf-250		1.0×10^{1}	2.7×10^{-10}	1.0×10^{4}	2.7×10^{-7}
Cf-251		1.0	2.7×10^{-11}	1.0×10^{3}	2.7×10^{-8}
Cf-252		1.0×10^{1}	2.7×10^{-10}	1.0×10^{4}	2.7×10^{-7}
Cf-253		1.0×10^{2}	2.7×10^{-9}	1.0×10^{5}	2.7×10^{-6}
Cf-254		1.0	2.7×10^{-11}	1.0×10^{3}	2.7×10^{-8}
Cl-36	Chlorine (17)	1.0×10^{4}	2.7×10^{-7}	1.0×10^{6}	2.7×10^{-5}
Cl-38		1.0×10^{1}	2.7×10^{-10}	1.0×10^{5}	2.7×10^{-6}
Cm-240	Curium (96)	1.0×10^{2}	2.7×10^{-9}	1.0×10^{5}	2.7×10^{-6}
Cm-241		1.0×10^{2}	2.7×10^{-9}	1.0×10^{6}	2.7×10^{-5}
Cm-242		1.0×10^{2}	2.7×10^{-9}	1.0×10^{5}	2.7×10^{-6}
Cm-243		1.0	2.7×10^{-11}	1.0×10^{4}	2.7×10^{-7}
Cm-244		1.0×10^{1}	2.7×10^{-10}	1.0×10^{4}	2.7×10^{-7}
Cm-245		1.0	2.7×10^{-11}	1.0×10^{3}	2.7×10^{-8}
Cm-246		1.0	2.7×10^{-11}	1.0×10^{3}	2.7×10^{-8}
Cm-247		1.0	2.7×10^{-11}	1.0×10^{4}	2.7×10^{-7}
Cm-248		1.0	2.7×10^{-11}	1.0×10^{3}	2.7×10^{-8}
Co-55	Cobalt (27)	1.0×10^{1}	2.7×10^{-10}	1.0×10^{6}	2.7×10^{-5}

ED_001691B_00009240

Symbol of radionuclide	Element and atomic number	Activity concentration for exempt material (Bq/g)	Activity concentration for exempt material (Ci/g)	Activity limit for exempt consignment (Bq)	Activity limit for exempt consignment (Ci)
Co-56		1.0×10^{1}	2.7×10^{-10}	1.0×10^{5}	2.7×10^{-6}
Co-57		1.0×10^{2}	2.7×10^{-9}	1.0×10^{6}	2.7×10^{-5}
Co-58		1.0×10^{1}	2.7×10^{-10}	1.0×10^{6}	2.7×10^{-5}
Co-58m		1.0×10^{4}	2.7×10^{-7}	1.0×10^{7}	2.7×10^{-4}
Co-60		1.0×10^{1}	2.7×10^{-10}	1.0×10^{5}	2.7×10^{-6}
Cr-51	Chromium (24)	1.0×10^{3}	2.7×10^{-8}	1.0×10^{7}	2.7×10^{-4}
Cs-129	Cesium (55)	1.0×10^{2}	2.7×10^{-9}	1.0×10^{5}	2.7×10^{-6}
Cs-131		1.0×10^{3}	2.7×10^{-8}	1.0×10^{6}	2.7×10^{-5}
Cs-132		1.0×10^{1}	2.7×10^{-10}	1.0×10^{5}	2.7×10^{-6}
Cs-134		1.0×10^{1}	2.7×10^{-10}	1.0×10^{4}	2.7×10^{-7}
Cs-134m		1.0×10^{3}	2.7×10^{-8}	1.0×10^{5}	2.7×10^{-6}
Cs-135		1.0×10^{4}	2.7×10^{-7}	1.0×10^{7}	2.7×10^{-4}
Cs-136		1.0×10^{1}	2.7×10^{-10}	1.0×10^{5}	2.7×10^{-6}
Cs-137 (b)		1.0×10^{1}	2.7×10^{-10}	1.0×10^{4}	2.7×10^{-7}
Cu-64	Copper (29)	1.0×10^{2}	2.7×10^{-9}	1.0×10^{6}	2.7×10^{-5}
Cu-67		1.0×10^{2}	2.7×10^{-9}	1.0×10^{6}	2.7×10^{-5}
Dy-159	Dysprosium (66)	1.0×10^{3}	2.7×10^{-8}	1.0×10^{7}	2.7×10^{-4}
Dy-165		1.0×10^{3}	2.7×10^{-8}	1.0×10^{6}	2.7×10^{-5}
Dy-166		1.0×10^{3}	2.7×10^{-8}	1.0×10^{6}	2.7×10^{-5}
Er-169	Erbium (68)	1.0×10^{4}	2.7×10^{-7}	1.0×10^{7}	2.7×10^{-4}
Er-171		1.0×10^{2}	2.7×10^{-9}	1.0×10^{6}	2.7×10^{-5}
Eu-147	Europium (63)	1.0×10^{2}	2.7×10^{-9}	1.0×10^{6}	2.7×10^{-5}
Eu-148		1.0×10^{1}	2.7×10^{-10}	1.0×10^{6}	2.7×10^{-5}
Eu-149		1.0×10^{2}	2.7×10^{-9}	1.0×10^{7}	2.7×10^{-4}
Eu-150 (short lived)		1.0×10^{3}	2.7×10^{-8}	1.0×10^{6}	2.7×10^{-5}
Eu-150 (long lived)		1.0×10^{1}	2.7×10^{-10}	1.0×10^{6}	2.7×10^{-5}
Eu-152		1.0×10^{1}	2.7×10^{-10}	1.0×10^{6}	2.7×10^{-5}
Eu-152m		1.0×10^{2}	2.7×10^{-9}	1.0×10^{6}	2.7×10^{-5}
Eu-154		1.0×10^{1}	2.7×10^{-10}	1.0×10^{6}	2.7×10^{-5}
Eu-155		1.0×10^{2}	2.7×10^{-9}	1.0×10^{7}	2.7×10^{-4}
Eu-156		1.0×10^{1}	2.7×10^{-10}	1.0×10^{6}	2.7×10^{-5}
F-18	Fluorine (9)	1.0×10^{1}	2.7×10^{-10}	1.0×10^{6}	2.7×10^{-5}
Fe-52	Iron (26)	1.0×10^{1}	2.7×10^{-10}	1.0×10^{6}	2.7×10^{-5}
Fe-55		1.0×10^{4}	2.7×10^{-7}	1.0×10^{6}	2.7×10^{-5}
Fe-59		1.0×10^{1}	2.7×10^{-10}	1.0×10^{6}	2.7×10^{-5}
Fe-60		1.0×10^{2}	2.7×10^{-9}	1.0×10^{5}	2.7×10^{-6}
Ga-67	Gallium (31)	1.0×10^{2}	2.7×10^{-9}	1.0×10^{6}	2.7×10^{-5}
Ga-68		1.0×10^{1}	2.7×10^{-10}	1.0×10^{5}	2.7×10^{-6}
Ga-72		1.0×10^{1}	2.7×10^{-10}	1.0×10^{5}	2.7×10^{-6}
Gd-146	Gadolinium (64)	1.0×10^{1}	2.7×10^{-10}	1.0×10^{6}	2.7×10^{-5}
Gd-148		1.0×10^{1}	2.7×10^{-10}	1.0×10^{4}	2.7×10^{-7}
Gd-153		1.0×10^{2}	2.7×10^{-9}	1.0×10^{7}	2.7×10^{-4}
Gd-159		1.0×10^{3}	2.7×10^{-8}	1.0×10^{6}	2.7×10^{-5}
Ge-68	Germanium (32)	1.0×10^{1}	2.7×10^{-10}	1.0×10^{5}	2.7×10^{-6}
Ge-71		1.0×10^{4}	2.7×10^{-7}	1.0×10^{8}	2.7×10^{-3}
Ge-77		1.0×10^{1}	2.7×10^{-10}	1.0×10^{5}	2.7×10^{-6}
Hf-172	Hafnium (72)	1.0×10^{1}	2.7×10^{-10}	1.0×10^{6}	2.7×10^{-5}
Hf-175		1.0×10^{2}	2.7×10^{-9}	1.0×10^{6}	2.7×10^{-5}
Hf-181		1.0×10^{1}	2.7×10^{-10}	1.0×10^{6}	2.7×10^{-5}
Hf-182		1.0×10^{2}	2.7×10^{-9}	1.0×10^{6}	2.7×10^{-5}
Hg-194	Mercury (80)	1.0×10^{1}	2.7×10^{-10}	1.0×10^{6}	2.7×10^{-5}
Hg-195m		1.0×10^{2}	2.7×10^{-9}	1.0×10^{6}	2.7×10^{-5}
Hg-197		1.0×10^{2}	2.7×10^{-9}	1.0×10^{7}	2.7×10^{-4}
Hg-197m		1.0×10^{2}	2.7×10^{-9}	1.0×10^{6}	2.7×10^{-5}
Hg-203		1.0×10^{2}	2.7×10^{-9}	1.0×10^{5}	2.7×10^{-6}
Ho-166	Holmium (67)	1.0×10^{3}	2.7×10^{-8}	1.0×10^{5}	2.7×10^{-6}
Ho-166m		1.0×10^{1}	2.7×10^{-10}	1.0×10^{6}	2.7×10^{-5}
I-123	Iodine (53)	1.0×10^{2}	2.7×10^{-9}	1.0×10^{7}	2.7×10^{-4}
I-124		1.0×10^{1}	2.7×10^{-10}	1.0×10^{6}	2.7×10^{-5}
I-125		1.0×10^{3}	2.7×10^{-8}	1.0×10^{6}	2.7×10^{-5}
I-126		1.0×10^{2}	2.7×10^{-9}	1.0×10^{6}	2.7×10^{-5}
I-129		1.0×10^{2}	2.7×10^{-9}	1.0×10^{5}	2.7×10^{-6}
I-131		1.0×10^{2}	2.7×10^{-9}	1.0×10^{6}	2.7×10^{-5}
I-132		1.0×10^{1}	2.7×10^{-10}	1.0×10^{5}	2.7×10^{-6}
I-133		1.0×10^{1}	2.7×10^{-10}	1.0×10^{6}	2.7×10^{-5}
I-134		1.0×10^{1}	2.7×10^{-10}	1.0×10^{5}	2.7×10^{-6}
I-135		1.0×10^{1}	2.7×10^{-10}	1.0×10^{6}	2.7×10^{-5}
In-111	Indium (49)	1.0×10^{2}	2.7×10^{-9}	1.0×10^{6}	2.7×10^{-5}
In-113m		1.0×10^{2}	2.7×10^{-9}	1.0×10^{6}	2.7×10^{-5}
In-114m		1.0×10^{2}	2.7×10^{-9}	1.0×10^{6}	2.7×10^{-5}
In-115m		1.0×10^{2}	2.7×10^{-9}	1.0×10^{6}	2.7×10^{-5}

ED_001691B_00009240

Symbol of radionuclide	Element and atomic number	Activity concentration for exempt material (Bq/g)	Activity concentration for exempt material (Ci/g)	Activity limit for exempt consignment (Bq)	Activity limit for exempt consignment (Ci)
Ir-189	Iridium (77)	1.0×10^{2}	2.7×10^{-9}	1.0×10^{7}	2.7×10^{-4}
Ir-190		1.0×10^{1}	2.7×10^{-10}	1.0×10^{6}	2.7×10^{-5}
Ir-192		1.0×10^{1}	2.7×10^{-10}	1.0×10^{4}	2.7×10^{-7}
Ir-194		1.0×10^{2}	2.7×10^{-9}	1.0×10^{5}	2.7×10^{-6}
K-40	Potassium (19)	1.0×10^{2}	2.7×10^{-9}	1.0×10^{6}	2.7×10^{-5}
K-42		1.0×10^{2}	2.7×10^{-9}	1.0×10^{6}	2.7×10^{-5}
K-43		1.0×10^{1}	2.7×10^{-10}	1.0×10^{6}	2.7×10^{-5}
Kr-79	Krypton (36)	1.0×10^{3}	2.7×10^{-8}	1.0×10^{5}	2.7×10^{-6}
Kr-81	Krypton (36)	1.0×10^{4}	2.7×10^{-7}	1.0×10^{7}	2.7×10^{-4}
Kr-85		1.0×10^{5}	2.7×10^{-6}	1.0×10^{4}	2.7×10^{-7}
Kr-85m		1.0×10^{3}	2.7×10^{-8}	1.0×10^{10}	2.7×10^{-1}
Kr-87		1.0×10^{2}	2.7×10^{-9}	1.0×10^{9}	2.7×10^{-2}
La-137	Lanthanum (57)	1.0×10^{3}	2.7×10^{-8}	1.0×10^{7}	2.7×10^{-4}
La-140		1.0×10^{1}	2.7×10^{-10}	1.0×10^{5}	2.7×10^{-6}
Lu-172	Lutetium (71)	1.0×10^{1}	2.7×10^{-10}	1.0×10^{6}	2.7×10^{-5}
Lu-173		1.0×10^{2}	2.7×10^{-9}	1.0×10^{7}	2.7×10^{-4}
Lu-174		1.0×10^{2}	2.7×10^{-9}	1.0×10^{7}	2.7×10^{-4}
Lu-174m		1.0×10^{2}	2.7×10^{-9}	1.0×10^{7}	2.7×10^{-4}
Lu-177		1.0×10^{3}	2.7×10^{-8}	1.0×10^{7}	2.7×10^{-4}
Mg-28	Magnesium (12)	1.0×10^{1}	2.7×10^{-10}	1.0×10^{5}	2.7×10^{-6}
Mn-52	Manganese (25)	1.0×10^{1}	2.7×10^{-10}	1.0×10^{5}	2.7×10^{-6}
Mn-53		1.0×10^{4}	2.7×10^{-7}	1.0×10^{9}	2.7×10^{-2}
Mn-54		1.0×10^{1}	2.7×10^{-10}	1.0×10^{6}	2.7×10^{-5}
Mn-56		1.0×10^{1}	2.7×10^{-10}	1.0×10^{5}	2.7×10^{-6}
Mo-93	Molybdenum (42)	1.0×10^{3}	2.7×10^{-8}	1.0×10^{8}	2.7×10^{-3}
Mo-99		1.0×10^{2}	2.7×10^{-9}	1.0×10^{6}	2.7×10^{-5}
N-13	Nitrogen (7)	1.0×10^{2}	2.7×10^{-9}	1.0×10^{9}	2.7×10^{-2}
Na-22	Sodium (11)	1.0×10^{1}	2.7×10^{-10}	1.0×10^{6}	2.7×10^{-5}
Na-24		1.0×10^{1}	2.7×10^{-10}	1.0×10^{5}	2.7×10^{-6}
Nb-93m	Niobium (41)	1.0×10^{4}	2.7×10^{-7}	1.0×10^{7}	2.7×10^{-4}
Nb-94		1.0×10^{1}	2.7×10^{-10}	1.0×10^{6}	2.7×10^{-5}
Nb-95		1.0×10^{1}	2.7×10^{-10}	1.0×10^{6}	2.7×10^{-5}
Nb-97		1.0×10^{1}	2.7×10^{-10}	1.0×10^{6}	2.7×10^{-5}
Nd-147	Neodymium (60)	1.0×10^{2}	2.7×10^{-9}	1.0×10^{6}	2.7×10^{-5}
Nd-149		1.0×10^{2}	2.7×10^{-9}	1.0×10^{6}	2.7×10^{-5}
Ni-59	Nickel (28)	1.0×10^{4}	2.7×10^{-7}	1.0×10^{8}	2.7×10^{-3}
Ni-63		1.0×10^{5}	2.7×10^{-6}	1.0×10^{8}	2.7×10^{-3}
Ni-65		1.0×10^{1}	2.7×10^{-10}	1.0×10^{6}	2.7×10^{-5}
Np-235	Neptunium (93)	1.0×10^{3}	2.7×10^{-8}	1.0×10^{7}	2.7×10^{-4}
Np-236 (short-lived)		1.0×10^{3}	2.7×10^{-8}	1.0×10^{7}	2.7×10^{-4}
Np-236 (long-lived)		1.0×10^{2}	2.7×10^{-9}	1.0×10^{5}	2.7×10^{-6}
Np-237 (b)		1.0	2.7×10^{-11}	1.0×10^{3}	2.7×10^{-8}
Np-239		1.0×10^{2}	2.7×10^{-9}	1.0×10^{7}	2.7×10^{-4}
Os-185	Osmium (76)	1.0×10^{1}	2.7×10^{-10}	1.0×10^{6}	2.7×10^{-5}
Os-191		1.0×10^{2}	2.7×10^{-9}	1.0×10^{7}	2.7×10^{-4}
Os-191m		1.0×10^{3}	2.7×10^{-8}	1.0×10^{7}	2.7×10^{-4}
Os-193		1.0×10^{2}	2.7×10^{-9}	1.0×10^{6}	2.7×10^{-5}
Os-194		1.0×10^{2}	2.7×10^{-9}	1.0×10^{5}	2.7×10^{-6}
P-32	Phosphorus (15)	1.0×10^{3}	2.7×10^{-8}	1.0×10^{5}	2.7×10^{-6}
P-33		1.0×10^{5}	2.7×10^{-6}	1.0×10^{8}	2.7×10^{-3}
Pa-230	Protactinium (91)	1.0×10^{1}	2.7×10^{-10}	1.0×10^{6}	2.7×10^{-5}
Pa-231		1.0	2.7×10^{-11}	1.0×10^{3}	2.7×10^{-8}
Pa-233		1.0×10^{2}	2.7×10^{-9}	1.0×10^{7}	2.7×10^{-4}
Pb-201	Lead (82)	1.0×10^{1}	2.7×10^{-10}	1.0×10^{6}	2.7×10^{-5}
Pb-202		1.0×10^{3}	2.7×10^{-8}	1.0×10^{6}	2.7×10^{-5}
Pb-203		1.0×10^{2}	2.7×10^{-9}	1.0×10^{6}	2.7×10^{-5}
Pb-205		1.0×10^{4}	2.7×10^{-7}	1.0×10^{7}	2.7×10^{-4}
Pb-210 (b)		1.0×10^{1}	2.7×10^{-10}	1.0×10^{4}	2.7×10^{-7}
Pb-212 (b)		1.0×10^{1}	2.7×10^{-10}	1.0×10^{5}	2.7×10^{-6}
Pd-103	Palladium (46)	1.0×10^{3}	2.7×10^{-8}	1.0×10^{8}	2.7×10^{-3}
Pd-107		1.0×10^{5}	2.7×10^{-6}	1.0×10^{8}	2.7×10^{-3}
Pd-109		1.0×10^{3}	2.7×10^{-8}	1.0×10^{6}	2.7×10^{-5}
Pm-143	Promethium (61)	1.0×10^{2}	2.7×10^{-9}	1.0×10^{6}	2.7×10^{-5}
Pm-144		1.0×10^{1}	2.7×10^{-10}	1.0×10^{6}	2.7×10^{-5}
Pm-145		1.0×10^{3}	2.7×10^{-8}	1.0×10^{7}	2.7×10^{-4}
Pm-147		1.0×10^{4}	2.7×10^{-7}	1.0×10^{7}	2.7×10^{-4}
Pm-148m		1.0×10^{1}	2.7×10^{-10}	1.0×10^{6}	2.7×10^{-5}
Pm-149		1.0×10^{3}	2.7×10^{-8}	1.0×10^{6}	2.7×10^{-5}
Pm-151		1.0×10^{2}	2.7×10^{-9}	1.0×10^{6}	2.7×10^{-5}
Po-210	Polonium (84)	1.0×10^{1}	2.7×10^{-10}	1.0×10^{4}	2.7×10^{-7}
Pr-142	Praseodymium (59)	1.0×10^{2}	2.7×10^{-9}	1.0×10^{5}	2.7×10^{-6}

ED_001691B_00009240

Symbol of radionuclide	Element and atomic number	Activity concentration for exempt material (Bq/g)	Activity concentration for exempt material (Ci/g)	Activity limit for exempt consignment (Bq)	Activity limit for exempt consignment (Ci)
Pr-143		1.0×10^{4}	2.7×10^{-7}	1.0×10^{6}	2.7×10^{-5}
Pt-188	Platinum (78)	1.0×10^{1}	2.7×10^{-10}	1.0×10^{6}	2.7×10^{-5}
Pt-191		1.0×10^{2}	2.7×10^{-9}	1.0×10^{6}	2.7×10^{-5}
Pt-193		1.0×10^{4}	2.7×10^{-7}	1.0×10^{7}	2.7×10^{-4}
Pt-193m		1.0×10^{3}	2.7×10^{-8}	1.0×10^{7}	2.7×10^{-4}
Pt-195m		1.0×10^{2}	2.7×10^{-9}	1.0×10^{6}	2.7×10^{-5}
Pt-197		1.0×10^{3}	2.7×10^{-8}	1.0×10^{6}	2.7×10^{-5}
Pt-197m		1.0×10^{2}	2.7×10^{-9}	1.0×10^{6}	2.7×10^{-5}
Pu-236	Plutonium (94)	1.0×10^{1}	2.7×10^{-10}	1.0×10^{4}	2.7×10^{-7}
Pu-237		1.0×10^{3}	2.7×10^{-8}	1.0×10^{7}	2.7×10^{-4}
Pu-238		1.0	2.7×10^{-11}	1.0×10^{4}	2.7×10^{-7}
Pu-239		1.0	2.7×10^{-11}	1.0×10^{4}	2.7×10^{-7}
Pu-240		1.0	2.7×10^{-11}	1.0×10^{3}	2.7×10^{-8}
Pu-241		1.0×10^{2}	2.7×10^{-9}	1.0×10^{5}	2.7×10^{-6}
Pu-242		1.0	2.7×10^{-11}	1.0×10^{4}	2.7×10^{-7}
Pu-244		1.0	2.7×10^{-11}	1.0×10^{4}	2.7×10^{-7}
Ra-223 (b)	Radium (88)	1.0×10^{2}	2.7×10^{-9}	1.0×10^{5}	2.7×10^{-6}
Ra-224 (b)		1.0×10^{1}	2.7×10^{-10}	1.0×10^{5}	2.7×10^{-6}
Ra-225		1.0×10^{2}	2.7×10^{-9}	1.0×10^{5}	2.7×10^{-6}
Ra-226 (b)		1.0×10^{1}	2.7×10^{-10}	1.0×10^{4}	2.7×10^{-7}
Ra-228 (b)		1.0×10^{1}	2.7×10^{-10}	1.0×10^{5}	2.7×10^{-6}
Rb-81	Rubidium (37)	1.0×10^{1}	2.7×10^{-10}	1.0×10^{6}	2.7×10^{-5}
Rb-83		1.0×10^{2}	2.7×10^{-9}	1.0×10^{6}	2.7×10^{-5}
Rb-84		1.0×10^{1}	2.7×10^{-10}	1.0×10^{6}	2.7×10^{-5}
Rb-86		1.0×10^{2}	2.7×10^{-9}	1.0×10^{5}	2.7×10^{-6}
Rb-87		1.0×10^{4}	2.7×10^{-7}	1.0×10^{7}	2.7×10^{-4}
Rb(nat)		1.0×10^{4}	2.7×10^{-7}	1.0×10^{7}	2.7×10^{-4}
Re-184	Rhenium (75)	1.0×10^{1}	2.7×10^{-10}	1.0×10^{6}	2.7×10^{-5}
Re-184m		1.0×10^{2}	2.7×10^{-9}	1.0×10^{6}	2.7×10^{-5}
Re-186		1.0×10^{3}	2.7×10^{-8}	1.0×10^{6}	2.7×10^{-5}
Re-187		1.0×10^{6}	2.7×10^{-5}	1.0×10^{9}	2.7×10^{-2}
Re-188		1.0×10^{2}	2.7×10^{-9}	1.0×10^{5}	2.7×10^{-6}
Re-189		1.0×10^{2}	2.7×10^{-9}	1.0×10^{6}	2.7×10^{-5}
Re(nat)		1.0×10^{6}	2.7×10^{-5}	1.0×10^{9}	2.7×10^{-2}
Rh-99	Rhodium (45)	1.0×10^{1}	2.7×10^{-10}	1.0×10^{6}	2.7×10^{-5}
Rh-101		1.0×10^{2}	2.7×10^{-9}	1.0×10^{7}	2.7×10^{-4}
Rh-102		1.0×10^{1}	2.7×10^{-10}	1.0×10^{6}	2.7×10^{-5}
Rh-102m		1.0×10^{2}	2.7×10^{-9}	1.0×10^{6}	2.7×10^{-5}
Rh-103m		1.0×10^{4}	2.7×10^{-7}	1.0×10^{8}	2.7×10^{-3}
Rh-105		1.0×10^{2}	2.7×10^{-9}	1.0×10^{7}	2.7×10^{-4}
Rn-222 (b)	Radon (86)	1.0×10^{1}	2.7×10^{-10}	1.0×10^{8}	2.7×10^{-3}
Ru-97	Ruthenium (44)	1.0×10^{2}	2.7×10^{-9}	1.0×10^{7}	2.7×10^{-4}
Ru-103		1.0×10^{2}	2.7×10^{-9}	1.0×10^{6}	2.7×10^{-5}
Ru-105		1.0×10^{1}	2.7×10^{-10}	1.0×10^{6}	2.7×10^{-5}
Ru-106 (b)		1.0×10^{2}	2.7×10^{-9}	1.0×10^{5}	2.7×10^{-6}
S-35	Sulphur (16)	1.0×10^{5}	2.7×10^{-6}	1.0×10^{8}	2.7×10^{-3}
Sb-122	Antimony (51)	1.0×10^{2}	2.7×10^{-9}	1.0×10^{4}	2.7×10^{-7}
Sb-124		1.0×10^{1}	2.7×10^{-10}	1.0×10^{6}	2.7×10^{-5}
Sb-125		1.0×10^{2}	2.7×10^{-9}	1.0×10^{6}	2.7×10^{-5}
Sb-126		1.0×10^{1}	2.7×10^{-10}	1.0×10^{5}	2.7×10^{-6}
Sc-44	Scandium (21)	1.0×10^{1}	2.7×10^{-10}	1.0×10^{5}	2.7×10^{-6}
Sc-46		1.0×10^{1}	2.7×10^{-10}	1.0×10^{6}	2.7×10^{-5}
Sc-47		1.0×10^{2}	2.7×10^{-9}	1.0×10^{6}	2.7×10^{-5}
Sc-48		1.0×10^{1}	2.7×10^{-10}	1.0×10^{5}	2.7×10^{-6}
Se-75	Selenium (34)	1.0×10^{2}	2.7×10^{-9}	1.0×10^{6}	2.7×10^{-5}
Se-79		1.0×10^{4}	2.7×10^{-7}	1.0×10^{7}	2.7×10^{-4}
Si-31	Silicon (14)	1.0×10^{3}	2.7×10^{-8}	1.0×10^{6}	2.7×10^{-5}
Si-32		1.0×10^{3}	2.7×10^{-8}	1.0×10^{6}	2.7×10^{-5}
Sm-145	Samarium (62)	1.0×10^{2}	2.7×10^{-9}	1.0×10^{7}	2.7×10^{-4}
Sm-147		1.0×10^{1}	2.7×10^{-10}	1.0×10^{4}	2.7×10^{-7}
Sm-151		1.0×10^{4}	2.7×10^{-7}	1.0×10^{8}	2.7×10^{-3}
Sm-153		1.0×10^{2}	2.7×10^{-9}	1.0×10^{6}	2.7×10^{-5}
Sn-113	Tin (50)	1.0×10^{3}	2.7×10^{-8}	1.0×10^{7}	2.7×10^{-4}
Sn-117m		1.0×10^{2}	2.7×10^{-9}	1.0×10^{6}	2.7×10^{-5}
Sn-119m		1.0×10^{3}	2.7×10^{-8}	1.0×10^{7}	2.7×10^{-4}
Sn-121m		1.0×10^{3}	2.7×10^{-8}	1.0×10^{7}	2.7×10^{-4}
Sn-123		1.0×10^{3}	2.7×10^{-8}	1.0×10^{6}	2.7×10^{-5}
Sn-125		1.0×10^{2}	2.7×10^{-9}	1.0×10^{5}	2.7×10^{-6}
Sn-126		1.0×10^{1}	2.7×10^{-10}	1.0×10^{5}	2.7×10^{-6}
Sr-82	Strontium (38)	1.0×10^{1}	2.7×10^{-10}	1.0×10^{5}	2.7×10^{-6}
Sr-85		1.0×10^{2}	2.7×10^{-9}	1.0×10^{6}	2.7×10^{-5}

ED_001691B_00009240

Symbol of radionuclide	Element and atomic number	Activity concentration for exempt material (Bq/g)	Activity concentration for exempt material (Ci/g)	Activity limit for exempt consignment (Bq)	Activity limit for exempt consignment (Ci)
Sr-85m		1.0×10^{2}	2.7×10^{-9}	1.0×10^{7}	2.7×10^{-4}
Sr-87m		1.0×10^{2}	2.7×10^{-9}	1.0×10^{6}	2.7×10^{-5}
Sr-89		1.0×10^{3}	2.7×10^{-8}	1.0×10^{6}	2.7×10^{-5}
Sr-90 (b)		1.0×10^{2}	2.7×10^{-9}	1.0×10^{4}	2.7×10^{-7}
Sr-91		1.0×10^{1}	2.7×10^{-10}	1.0×10^{5}	2.7×10^{-6}
Sr-92		1.0×10^{1}	2.7×10^{-10}	1.0×10^{6}	2.7×10^{-5}
T(H-3)	Tritium (1)	1.0×10^{6}	2.7×10^{-5}	1.0×10^{9}	2.7×10^{-2}
Ta-178 (long-lived)	Tantalum (73)	1.0×10^{1}	2.7×10^{-10}	1.0×10^{6}	2.7×10^{-5}
Ta-179		1.0×10^{3}	2.7×10^{-8}	1.0×10^{7}	2.7×10^{-4}
Ta-182		1.0×10^{1}	2.7×10^{-10}	1.0×10^{4}	2.7×10^{-7}
Tb-157	Terbium (65)	1.0×10^{4}	2.7×10^{-7}	1.0×10^{7}	2.7×10^{-4}
Tb-158		1.0×10^{1}	2.7×10^{-10}	1.0×10^{6}	2.7×10^{-5}
Tb-160		1.0×10^{1}	2.7×10^{-10}	1.0×10^{6}	2.7×10^{-5}
Tc-95m	Technetium (43)	1.0×10^{1}	2.7×10^{-10}	1.0×10^{6}	2.7×10^{-5}
Tc-96		1.0×10^{1}	2.7×10^{-10}	1.0×10^{6}	2.7×10^{-5}
Tc-96m		1.0×10^{3}	2.7×10^{-8}	1.0×10^{7}	2.7×10^{-4}
Tc-97		1.0×10^{3}	2.7×10^{-8}	1.0×10^{8}	2.7×10^{-3}
Tc-97m		1.0×10^{3}	2.7×10^{-8}	1.0×10^{7}	2.7×10^{-4}
Tc-98		1.0×10^{1}	2.7×10^{-10}	1.0×10^{6}	2.7×10^{-5}
Tc-99		1.0×10^{4}	2.7×10^{-7}	1.0×10^{7}	2.7×10^{-4}
Tc-99m		1.0×10^{2}	2.7×10^{-9}	1.0×10^{7}	2.7×10^{-4}
Te-121	Tellurium (52)	1.0×10^{1}	2.7×10^{-10}	1.0×10^{6}	2.7×10^{-5}
Te-121m		1.0×10^{2}	2.7×10^{-9}	1.0×10^{6}	2.7×10^{-5}
Te-123m		1.0×10^{2}	2.7×10^{-9}	1.0×10^{7}	2.7×10^{-4}
Te-125m		1.0×10^{3}	2.7×10^{-8}	1.0×10^{7}	2.7×10^{-4}
Te-127		1.0×10^{3}	2.7×10^{-8}	1.0×10^{6}	2.7×10^{-5}
Te-127m		1.0×10^{3}	2.7×10^{-8}	1.0×10^{7}	2.7×10^{-4}
Te-129		1.0×10^{2}	2.7×10^{-9}	1.0×10^{6}	2.7×10^{-5}
Te-129m		1.0×10^{3}	2.7×10^{-8}	1.0×10^{6}	2.7×10^{-5}
Te-131m		1.0×10^{1}	2.7×10^{-10}	1.0×10^{6}	2.7×10^{-5}
Te-132		1.0×10^{2}	2.7×10^{-9}	1.0×10^{7}	2.7×10^{-4}
Th-227	Thorium (90)	1.0×10^{1}	2.7×10^{-10}	1.0×10^{4}	2.7×10^{-7}
Th-228 (b)		1.0	2.7×10^{-11}	1.0×10^{4}	2.7×10^{-7}
Th-229 (b)		1.0	2.7×10^{-11}	1.0×10^{3}	2.7×10^{-8}
Th-230		1.0	2.7×10^{-11}	1.0×10^{4}	2.7×10^{-7}
Th-231		1.0×10^{3}	2.7×10^{-8}	1.0×10^{7}	2.7×10^{-4}
Th-232		1.0×10^{1}	2.7×10^{-10}	1.0×10^{4}	2.7×10^{-7}
Th-234 (b)		1.0×10^{3}	2.7×10^{-8}	1.0×10^{5}	2.7×10^{-6}
Th (nat) (b)		1.0	2.7×10^{-11}	1.0×10^{3}	2.7×10^{-8}
Ti-44	Titanium (22)	1.0×10^{1}	2.7×10^{-10}	1.0×10^{5}	2.7×10^{-6}
Tl-200	Thallium (81)	1.0×10^{1}	2.7×10^{-10}	1.0×10^{6}	2.7×10^{-5}
Tl-201		1.0×10^{2}	2.7×10^{-9}	1.0×10^{6}	2.7×10^{-5}
Tl-202		1.0×10^{2}	2.7×10^{-9}	1.0×10^{6}	2.7×10^{-5}
Tl-204		1.0×10^{4}	2.7×10^{-7}	1.0×10^{4}	2.7×10^{-7}
Tm-167	Thulium (69)	1.0×10^{2}	2.7×10^{-9}	1.0×10^{6}	2.7×10^{-5}
Tm-170		1.0×10^{3}	2.7×10^{-8}	1.0×10^{6}	2.7×10^{-5}
Tm-171		1.0×10^{4}	2.7×10^{-7}	1.0×10^{8}	2.7×10^{-3}
U-230 (fast lung absorption) (b),(d)	Uranium (92)	1.0×10^{1}	2.7×10^{-10}	1.0×10^{5}	2.7×10^{-6}
U-230 (medium lung absorption) (e)		1.0×10^{1}	2.7×10^{-10}	1.0×10^{4}	2.7×10^{-7}
U-230 (slow lung absorption) (f)		1.0×10^{1}	2.7×10^{-10}	1.0×10^{4}	2.7×10^{-7}
U-232 (fast lung absorption) (b),(d)		1.0	2.7×10^{-11}	1.0×10^{3}	2.7×10^{-8}
U-232 (medium lung absorption) (e)		1.0×10^{1}	2.7×10^{-10}	1.0×10^{4}	2.7×10^{-7}
U-232 (slow lung absorption) (f)		1.0×10^{1}	2.7×10^{-10}	1.0×10^{4}	2.7×10^{-7}
U-233 (fast lung absorption) (d)		1.0×10^{1}	2.7×10^{-10}	1.0×10^{4}	2.7×10^{-7}
U-233 (medium lung absorption) (e)		1.0×10^{2}	2.7×10^{-9}	1.0×10^{5}	2.7×10^{-6}
U-233 (slow lung absorption) (f)		1.0×10^{1}	2.7×10^{-10}	1.0×10^{5}	2.7×10^{-6}
U-234 (fast lung absorption) (d)		1.0×10^{1}	2.7×10^{-10}	1.0×10^{4}	2.7×10^{-7}
U-234 (medium lung absorption) (e)		1.0×10^{2}	2.7×10^{-9}	1.0×10^{5}	2.7×10^{-6}
U-234 (slow lung absorption) (f)		1.0×10^{1}	2.7×10^{-10}	1.0×10^{5}	2.7×10^{-6}
U-235 (all lung absorption types) (b),(d),(e),(f).		1.0×10^{1}	2.7×10^{-10}	1.0×10^{4}	2.7×10^{-7}
U-236 (fast lung absorption) (d)		1.0×10^{1}	2.7×10^{-10}	1.0×10^{4}	2.7×10^{-7}
U-236 (medium lung absorption) (e)		1.0×10^{2}	2.7×10^{-9}	1.0×10^{5}	2.7×10^{-6}
U-236 (slow lung absorption) (f)		1.0×10^{1}	2.7×10^{-10}	1.0×10^{4}	2.7×10^{-7}
U-238 (all lung absorption types) (b),(d),(e),(f).		1.0×10^{1}	2.7×10^{-10}	1.0×10^{4}	2.7×10^{-7}
U (nat) (b)		1.0	2.7×10^{-11}	1.0×10^{3}	2.7×10^{-8}
U (enriched to 20% or less)(g)		1.0	2.7×10^{-11}	1.0×10^{3}	2.7×10^{-8}
U (dep)		1.0	2.7×10^{-11}	1.0×10^{3}	2.7×10^{-8}
V-48	Vanadium (23)	1.0×10^{1}	2.7×10^{-10}	1.0×10^{5}	2.7×10^{-6}
V-49		1.0×10^{4}	2.7×10^{-7}	1.0×10^{7}	2.7×10^{-4}

ED_001691B_00009240

Symbol of radionuclide	Element and atomic number	Activity concentration for exempt material (Bq/g)	Activity concentration for exempt material (Ci/g)	Activity limit for exempt consignment (Bq)	Activity limit for exempt consignment (Ci)
W-178	Tungsten (74)	1.0×10^{1}	2.7×10^{-10}	1.0×10^{6}	2.7×10^{-5}
W-181		1.0×10^{3}	2.7×10^{-8}	1.0×10^{7}	2.7×10^{-4}
W-185		1.0×10^{4}	2.7×10^{-7}	1.0×10^{7}	2.7×10^{-4}
W-187		1.0×10^{2}	2.7×10^{-9}	1.0×10^{6}	2.7×10^{-5}
W-188		1.0×10^{2}	2.7×10^{-9}	1.0×10^{5}	2.7×10^{-6}
Xe-122	Xenon (54)	1.0×10^{2}	2.7×10^{-9}	1.0×10^{9}	2.7×10^{-2}
Xe-123		1.0×10^{2}	2.7×10^{-9}	1.0×10^{9}	2.7×10^{-2}
Xe-127		1.0×10^{3}	2.7×10^{-8}	1.0×10^{5}	2.7×10^{-6}
Xe-131m		1.0×10^{4}	2.7×10^{-7}	1.0×10^{4}	2.7×10^{-7}
Xe-133		1.0×10^{3}	2.7×10^{-8}	1.0×10^{4}	2.7×10^{-7}
Xe-135		1.0×10^{3}	2.7×10^{-8}	1.0×10^{10}	2.7×10^{-1}
Y-87	Yttrium (39)	1.0×10^{1}	2.7×10^{-10}	1.0×10^{6}	2.7×10^{-5}
Y-88		1.0×10^{1}	2.7×10^{-10}	1.0×10^{6}	2.7×10^{-5}
Y-90		1.0×10^{3}	2.7×10^{-8}	1.0×10^{5}	2.7×10^{-6}
Y-91		1.0×10^{3}	2.7×10^{-8}	1.0×10^{6}	2.7×10^{-5}
Y-91m		1.0×10^{2}	2.7×10^{-9}	1.0×10^{6}	2.7×10^{-5}
Y-92		1.0×10^{2}	2.7×10^{-9}	1.0×10^{5}	2.7×10^{-6}
Y-93		1.0×10^{2}	2.7×10^{-9}	1.0×10^{5}	2.7×10^{-6}
Yb-169	Ytterbium (70)	1.0×10^{2}	2.7×10^{-9}	1.0×10^{7}	2.7×10^{-4}
Yb-175		1.0×10^{3}	2.7×10^{-8}	1.0×10^{7}	2.7×10^{-4}
Zn-65	Zinc (30)	1.0×10^{1}	2.7×10^{-10}	1.0×10^{6}	2.7×10^{-5}
Zn-69		1.0×10^{4}	2.7×10^{-7}	1.0×10^{6}	2.7×10^{-5}
Zn-69m		1.0×10^{2}	2.7×10^{-9}	1.0×10^{6}	2.7×10^{-5}
Zr-88	Zirconium (40)	1.0×10^{2}	2.7×10^{-9}	1.0×10^{6}	2.7×10^{-5}
Zr-93 (b)		1.0×10^{3}	2.7×10^{-8}	1.0×10^{7}	2.7×10^{-4}
Zr-95		1.0×10^{1}	2.7×10^{-10}	1.0×10^{6}	2.7×10^{-5}
Zr-97 (b)		1.0×10^{1}	2.7×10^{-10}	1.0×10^{5}	2.7×10^{-6}

[a] [Reserved]

[b] Parent nuclides and their progeny included in secular equilibrium are listed as follows:

Sr-90 Y-90
Zr-93 Nb-93m
Zr-97 Nb-97
Ru-106 Rh-106
Ag-108m Ag-108
Cs-137 Ba-137m
Ce-144 Pr-144
Ba-140 La-140
Bi-212 Tl-208 (0.36), Po-212 (0.64)
Pb-210 Bi-210, Po-210
Pb-212 Bi-212, Tl-208 (0.36), Po-212 (0.64)
Rn-222 Po-218, Pb-214, Bi-214, Po-214
Ra-223 Rn-219, Po-215, Pb-211, Bi-211, Tl-207
Ra-224 Rn-220, Po-216, Pb-212, Bi-212, Tl-208 (0.36), Po-212 (0.64),
Ra-226 Rn-222, Po-218, Pb-214, Bi-214, Bi-214, Po-214, Pb-210, Bi-210, Po-210
Ra-228 Ac-228
Th-228 Ra-224, Rn-220, Po-216, Pb-212, Bi-212, Tl-208 (0.36), Po-212(0.64)
Th-229 Ra-225, Ac-225, Fr-221, At-217, Bi-213, Po-213, Pb-209
Th-nat Ra-228, Ac-228, Th-228, Ra-224, Rn-220, Po-216, Pb-212, Bi-212, Tl-208 (0.36), Po-212 (0.64)
Th-234 Pa-234m
U-230 Th-226, Ra-222, Rn-218, Po-214
U-232 Th-228, Ra-224, Rn-220, Po-216, Pb-212, Bi-212, Tl-208 (0.36), Po-212 (0.64)
U-235 Th-231
U-238 Th-234, Pa-234m
U-nat Th-234, Pa-234m, U-234, Th-230, Ra-226, Rn-222, Po-218, Pb-214, Bi-214, Po-214, Pb-210, Bi-210, Po-210
Np-237 Pa-233
Am-242m Am-242
Am-243 Np-239

[c] [Reserved]

[d] These values apply only to compounds of uranium that take the chemical form of UF_6, UO_2F_2 and $UO_2(NO_3)_2$ in both normal and accident conditions of transport.

[e] These values apply only to compounds of uranium that take the chemical form of UO_3, UF_4, UCl_4 and hexavalent compounds in both normal and accident conditions of transport.

[f] These values apply to all compounds of uranium other than those specified in notes (d) and (e) of this table.

[g] These values apply to unirradiated uranium only.

[69 FR 3685, Jan. 26, 2004, as amended at 79 FR 40615, July 11, 2014]

§ 173.441 Radiation level limitations and exclusive use provisions.

(a) Except as provided in paragraph (b) of this section, each package of Class 7 (radioactive) materials offered for transportation must be designed and prepared for shipment, so that under conditions normally incident to

ED_001691B_00009240

transportation, the radiation level does not exceed 2 mSv/hour (200 mrem/hour) at any point on the external surface of the package, and the transport index does not exceed 10.

(b) A package which exceeds the radiation level limits specified in paragraph (a) of this section must be transported by exclusive use shipment, and the radiation levels for such shipment may not exceed the following during transportation:

(1) 2 mSv/h (200 mrem/h) on the external surface of the package unless the following conditions are met, in which case the limit is 10 mSv/h (1000 mrem/h):

(i) The shipment is made in a closed transport vehicle;

(ii) The package is secured within the vehicle so that its position remains fixed during transportation; and

(iii) There are no loading or unloading operations between the beginning and end of the transportation;

(2) 2 mSv/h (200 mrem/h) at any point on the outer surfaces of the vehicle, including the top and underside of the vehicle; or in the case of a flat-bed style vehicle, at any point on the vertical planes projected from the outer edges of the vehicle, on the upper surface of the load or enclosure if used, and on the lower external surface of the vehicle;

(3) 0.1 mSv/h (10 mrem/h) at any point 2 m (6.6 feet) from the outer lateral surfaces of the vehicle (excluding the top and underside of the vehicle); or in the case of a flat-bed style vehicle, at any point 2 m (6.6 feet) from the vertical planes projected by the outer edges of the vehicle (excluding the top and underside of the vehicle); and

(4) 0.02 mSv/h (2mrem/h) in any normally occupied space, except that this provision does not apply to carriers if they operate under the provisions of a State or federally regulated radiation protection program and if personnel under their control who are in such an occupied space wear radiation dosimetry devices.

(c) For shipments made under the provisions of paragraph (b) of this section, the offeror shall provide specific written instructions for maintenance of the exclusive use shipment controls to the carrier. The instructions must be included with the shipping paper information. The instructions must be sufficient so that, when followed, they will cause the carrier to avoid actions that will unnecessarily delay delivery or unnecessarily result in increased radiation levels or radiation exposures to transport workers or members of the general public.

(d) Conveyance limits on the sum of package transport indices are as follows:

(1) Except for shipments by cargo aircraft only or by seagoing vessel, the sum of transport indices for a non-exclusive use shipment may not exceed 50.

(2) Where a consignment is transported under exclusive use, there is no limit on the sum of the transport indices aboard a single conveyance. The conditions of paragraphs (b)(2), (b)(3), (b)(4) and (c) must be met.

(3) Provisions for shipments of Class 7 (radioactive) materials by air are described in §§175.700–175.705 of this subchapter.

(4) Provisions for shipment of Class 7 (radioactive) materials by vessel are described in §§176.700–176.720 of this subchapter.

(e) A package exceeding the maximum surface radiation level or maximum transport index prescribed in paragraph (a) of this section may not be transported by aircraft.

[Amdt. 173–244, 60 FR 50307, Sept. 28, 1995, as amended at 63 FR 48568, Sept. 10, 1998; 66 FR 45380, Aug. 28, 2001; 69 FR 3691, Jan. 26, 2004]

§ 173.442 Thermal limitations.

A package of Class 7 (radioactive) material must be designed, constructed, and loaded so that—

(a) The heat generated within the package by the radioactive contents will not, during conditions normally incident to transport, affect the integrity of the package; and

(b) The temperature of the accessible external surfaces of the loaded package will not, assuming still air in the shade at an ambient temperature of 38 °C (100 °F), exceed either—

(1) 50 °C (122 °F) in other than an exclusive use shipment; or

(2) 85 °C (185 °F) in an exclusive use shipment.

ED_001691B_00009240

§ 173.443 Contamination control.

(a) The level of non-fixed contamination must be kept as low as reasonably achievable on the external surfaces of each package, conveyance, freight container, and overpack offered for transport, and the internal surfaces of each conveyance, freight container, and overpack in which inner packages or receptacles of Class 7 (radioactive) materials are offered for transport.

(1) Excluding the interior surfaces of the containment system of packages and the internal surfaces of a conveyance, freight container, tank, or intermediate bulk container dedicated to the transport of unpackaged radioactive material in accordance with § 173.427(c) and remaining under that specific exclusive use, the level of non-fixed contamination may not exceed the limits set forth in Table 9 and must be determined by either:

(i) Wiping an area of 300 cm^2 of the surface concerned with an absorbent material, using moderate pressure, and measuring the activity on the wiping material. Sufficient measurements must be taken in the most appropriate locations to yield a representative assessment of the non-fixed contamination levels. The amount of radioactivity measured on any single wiping material, divided by the surface area wiped and divided by the efficiency of the wipe procedure (the fraction of non-fixed contamination transferred from the surface to the absorbent material), may not exceed the limits set forth in Table 9 at any time during transport. For this purpose the actual wipe efficiency may be used, or the wipe efficiency may be assumed to be 0.10; or

(ii) Alternatively, the level of non-fixed contamination may be determined by using other methods of equal or greater efficiency.

(2) A conveyance used for non-exclusive use shipments is not required to be surveyed unless there is reason to suspect that it may exhibit contamination.

Table 9 is as follows:

TABLE 9—NON-FIXED EXTERNAL RADIOACTIVE CONTAMINATION LIMITS FOR PACKAGES

Contaminant	*Maximum permissible limits*		
	Bq/cm²	*uCi/cm²*	*dpm/cm²*
1. Beta and gamma emitters and low toxicity alpha emitters	4	10^{-4}	240
2. All other alpha emitting radionuclides	0.4	10^{-5}	24

(b) In the case of packages transported as exclusive use shipments by rail or public highway only, except as provided in paragraph (d) of this section, at any time during transport the non-fixed contamination on the external surface of any package, as well as on the associated accessible internal surfaces of any conveyance, overpack, or freight container, may not exceed ten times the levels prescribed in paragraph (a) of this section. The levels at the beginning of transport may not exceed the levels prescribed in paragraph (a) of this section.

(c) Except as provided in paragraphs (a) and (d) of this section, each conveyance, overpack, freight container, tank, or intermediate bulk container used for transporting Class 7 (radioactive) materials as an exclusive use shipment that utilizes the provisions of paragraph (b) of this section, § 173.427(b)(4), or § 173.427(c) must be surveyed with appropriate radiation detection instruments after each exclusive use transport. Except as provided in paragraphs (a) and (d) of this section, these items may not be returned to Class 7 (radioactive) materials exclusive use transport service, and then only for a subsequent exclusive use shipment utilizing one of the above cited provisions, unless the radiation dose rate at each accessible surface is 0.005 mSv per hour (0.5 mrem per hour) or less, and there is no significant non-fixed surface contamination as specified in paragraph (a) of this section. The requirements of this paragraph do not address return to service of items outside of the above cited provisions.

ED_001691B_00009240

(d) Paragraphs (b) and (c) of this section do not apply to any closed transport vehicle used solely for the exclusive use transportation by highway or rail of Class 7 (radioactive) material with contamination levels that do not exceed ten times the levels prescribed in paragraph (a) of this section if—

(1) A survey of the interior surfaces of the empty vehicle shows that the radiation dose rate at any point does not exceed 0.1 mSv/h (10 mrem/h) at the surface or 0.02 mSv/h (2 mrem/h) at 1 m (3.3 feet) from the surface;

(2) Each vehicle is marked (e.g. stenciled) with the words "For Radioactive Materials Use Only" in letters at least 76 millimeters (3 inches) high in a conspicuous place on both sides of the exterior of the vehicle; and

(3) Each vehicle is kept closed except for loading or unloading; and

(4) Each vehicle is placarded in accordance with subpart F of part 172 of this subchapter.

(e) If it is evident that a package of radioactive material, or conveyance carrying unpackaged radioactive material, is leaking, or if it is suspected that the package, or conveyance carrying unpackaged material, may have leaked, access to the package or conveyance must be restricted and, as soon as possible, the extent of contamination and the resultant radiation level of the package or conveyance must be assessed. The scope of the assessment must include, as applicable, the package, the conveyance, the adjacent loading and unloading areas, and, if necessary, all other material which has been carried in the conveyance. When necessary, additional steps for the protection of persons, property, and the environment must be taken to overcome and minimize the consequences of such leakage. Packages, and conveyances carrying unpackaged material, which are leaking radioactive contents in excess of limits for normal conditions of transport may be removed to an interim location under supervision, but must not be forwarded until repaired or reconditioned and decontaminated, or as approved by the Associate Administrator.

[79 FR 40616, July 11, 2014]

§ 173.447 Storage incident to transportation—general requirements.

The following requirements apply to temporary storage during the course of transportation but not to Nuclear Regulatory Commission or Agreement State-licensed facilities or U.S. Government-owned or contracted facilities.

(a) The number of packages and overpacks bearing FISSILE labels stored in any one storage area, such as a transit area, terminal building, storeroom, waterfront pier, or assembly yard, must be limited so that the total sum of the criticality safety indices in any individual group of such packages and overpacks does not exceed 50. Groups of such packages and overpacks must be stored so as to maintain a spacing of at least 6 m (20 feet) from all other groups of such packages and overpacks.

(b) Storage requirements for Class 7 (radioactive) material transported in vessels are described in subpart M of part 176 of this subchapter.

[Amdt. 173–244, 60 FR 50307, Sept. 28, 1995, as amended by 66 FR 45380, Aug. 28, 2001; 69 FR 3691, Jan. 26, 2004]

§ 173.448 General transportation requirements.

(a) Each shipment of Class 7 (radioactive) materials must be secured to prevent shifting during normal transportation conditions.

(b) Except as provided in §§ 174.81, 176.83, and 177.848 of this subchapter, or as otherwise required by the Competent Authority in the applicable certificate, a package or overpack of Class 7 (radioactive) materials may be carried among packaged general cargo without special stowage provisions, if—

(1) The heat output in watts does not exceed 0.1 times the minimum package dimension in centimeters; or

(2) The average surface heat flux of the package or overpack does not exceed 15 watts per square meter and the immediately surrounding cargo is not in sacks or bags or otherwise in a form that would seriously impede air circulation for heat removal.

(c) Packages or overpacks bearing labels prescribed in § 172.403 of this subchapter may not be carried in compartments occupied by passengers, except

ED_001691B_00009240

in those compartments exclusively reserved for couriers accompanying those packages.

(d) Mixing of different kinds of packages that include fissile packages is authorized only in accordance with § 173.459.

(e) No person shall offer for transportation or transport aboard a passenger-carrying aircraft any single package or overpack with a transport index greater than 3.0.

(f) No person shall offer for transportation or transport aboard a passenger-carrying aircraft any Class 7 (radioactive) material unless that material is intended for use in, or incident to, research, medical diagnosis or treatment.

(g) If an overpack is used to consolidate individual packages or to enclose a single package of Class 7 (radioactive) materials, the package(s) must comply with the packaging, marking, and labeling requirements of this subchapter, and:

(1) The overpack must be labeled as prescribed in § 172.403(h) of this subchapter;

(2) The overpack must be marked as prescribed in subpart D of part 172 of this subchapter and § 173.25(a); and

(3) The transport index of the overpack may not exceed 3.0 for passenger-carrying aircraft shipments, or 10.0 for cargo-aircraft shipments.

[69 FR 3691, Jan. 26, 2004]

§ 173.453 Fissile materials—exceptions.

Fissile materials meeting the requirements of at least one of the paragraphs (a) through (f) of this section are excepted from the requirements of this subpart for fissile materials, including the requirements of §§ 173.457 and 173.459, but are subject to all other requirements of this subpart, except as noted.

(a) An individual package containing 2 grams or less of fissile material.

(b) An individual or bulk packaging containing 15 grams or less of fissile material provided the package has at least 200 grams of solid nonfissile material for every gram of fissile material. Lead, beryllium, graphite, and hydrogenous material enriched in deuterium may be present in the package but must not be included in determining the required mass for solid nonfissile material.

(c) Low concentrations of solid fissile material commingled with solid nonfissile material, provide that:

(1) There is at least 2000 grams of nonfissile material for every gram of fissile material, and

(2) There is no more than 180 grams of fissile material distributed within 360 kg of contiguous nonfissile material. Lead, beryllium, graphite, and hydrogenous material enriched in deuterium may be present in the package but must not be included in determining the required mass of solid nonfissile material.

(d) Uranium enriched in uranium-235 to a maximum of 1 percent by weight, and with total plutonium and uranium-233 content of up to 1 percent of the mass of uranium-235, provided that the mass of any beryllium, graphite, and hydrogenous material enriched in deuterium constitute less than 5 percent of the uranium mass.

(e) Liquid solutions of uranyl nitrate enriched in uranium-235 to a maximum of 2 percent by mass, with a total plutonium and uranium-233 content not exceeding 0.002 percent of the mass of uranium, and with a minimum nitrogen to uranium atomic ratio (N/U) of 2. The material must be contained in at least a DOT Type A package.

(f) Packages containing, individually, a total plutonium mass of not more than 1000 grams, of which not more than 20 percent by mass may consist of plutonium-239, plutonium-241, or any combination of these radionuclides.

[69 FR 3692, Jan. 26, 2004]

§ 173.457 Transportation of fissile material packages—specific requirements.

(a) Packages containing fissile radioactive material which are not excepted under § 173.453 must be assigned by the offeror, in accordance with their definitions in § 173.403, a criticality safety index (CSI) and a transport index (TI).

(b) Fissile material packages and conveyances transporting fissile material packages must satisfy the radiation level restrictions of § 173.441.

(c) Except for consignments under exclusive use, the CSI of any package or overpack may not exceed 50. A fissile

ED_001691B_00009240

material package with CSI greater than 50 must be transported by exclusive use.

(d) For non-exclusive use shipments of fissile material packages, except on vessels, the total sum of CSI's in a freight container or on a conveyance may not exceed 50.

(e) For exclusive use shipments of fissile material packages, except on vessels, the total sum of CSI's in a freight container or on a conveyance may not exceed 100.

(f) Exclusive use shipments of fissile material packages must satisfy the radiation level and administrative requirements of § 173.441(b).

(g) The number of packages, overpacks and freight containers containing fissile material stored in transit in any one storage area must be so limited that the total sum of the CSI's in any group of packages, overpacks or freight containers does not exceed 50. Groups of packages shall be stored so as to maintain a spacing of a least 6 m (20 ft) between the closest surfaces of any two groups.

(h) Provisions for shipment by vessel of Class 7 (radioactive) material packages, including fissile material packages by vessel are described in §§ 176.700–176.720 of this subchapter.

[69 FR 3692, Jan. 26, 2004]

§ 173.459 Mixing of fissile material packages with non-fissile or fissile-excepted material packages.

Mixing of fissile material packages with other types of Class 7 (radioactive) materials in any conveyance or storage location is authorized only if the TI of any single package does not exceed 10, the CSI of any single package does not exceed 50, and the provisions of §§ 173.441 and 173.457 are satisfied.

[69 FR 3692, Jan. 26, 2004]

§ 173.461 Demonstration of compliance with tests.

(a) Compliance with the design requirements in § 173.412 and the test requirements in §§ 173.465 through 173.469 must be shown by any of the methods prescribed in this paragraph, or by a combination of these methods appropriate for the particular feature being evaluated:

(1) Performance of tests with prototypes or samples of the specimens representing LSA-III, special form Class 7 (radioactive) material, or packaging, in which case the contents of the packaging for the test must simulate as closely as practicable the expected range of physical properties of the radioactive contents or packaging to be tested, must be prepared as normally presented for transport. The use of non-radioactive substitute contents is encouraged provided that the results of the testing take into account the radioactive characteristics of the contents for which the package is being tested;

(2) Reference to a previous, satisfactory demonstration of compliance of a sufficiently similar nature;

(3) Performance of tests with models of appropriate scale incorporating those features that are significant with respect to the item under investigation, when engineering experience has shown results of those tests to be suitable for design purposes. When a scale model is used, the need for adjusting certain test parameters, such as the penetrator diameter or the compressive load, must be taken into account; or

(4) Calculations or reasoned evaluation, using reliable and conservative procedures and parameters.

(b) With respect to the initial conditions for the tests under §§ 173.465 through 173.469, except for the water immersion tests, compliance must be based upon the assumption that the package is in equilibrium at an ambient temperature of 38 °C (100 °F).

[Amdt. 173–244, 60 FR 50307, Sept. 28, 1995, as amended by 63 FR 52850, Oct. 1, 1998]

§ 173.462 Preparation of specimens for testing.

(a) Each specimen (i.e., sample, prototype or scale model) must be examined before testing to identify and record faults or damage, including:

(1) Divergence from the specifications or drawings;

(2) Defects in construction;

(3) Corrosion or other deterioration; and

(4) Distortion of features.

ED_001691B_00009240

(b) Any deviation found under paragraph (a) of this section from the specified design must be corrected or appropriately taken into account in the subsequent evaluation.

(c) The containment system of the packaging must be clearly specified.

(d) The external features of the specimen must be clearly identified so that reference may be made to any part of it.

§ 173.465 Type A packaging tests.

(a) The packaging, with contents, must be capable of withstanding the water spray, free drop, stacking and penetration tests prescribed in this section. One prototype may be used for all tests if the requirements of paragraph (b) of this section are met. The tests are successful if the requirements of § 173.412(j) are met.

(b) *Water spray test.* The water spray test must precede each test or test sequence prescribed in this section. The water spray test must simulate exposure to rainfall of approximately 5 cm (2 inches) per hour for at least one hour. The time interval between the end of the water spray test and the beginning of the next test must be such that the water has soaked in to the maximum extent without appreciable drying of the exterior of the specimen. In the absence of evidence to the contrary, this interval may be assumed to be two hours if the water spray is applied from four different directions simultaneously. However, no time interval may elapse if the water spray is applied from each of the four directions consecutively.

(c) *Free drop test.* The specimen must drop onto the target so as to suffer maximum damage to the safety features being tested, and:

(1) The height of the drop measured from the lowest point of the specimen to the upper surface of the target may not be less than the distance specified in table 10, for the applicable package mass. The target must be as specified in § 173.465(c)(5). Table 10 is as follows:

TABLE 10—FREE DROP DISTANCE FOR TESTING PACKAGES TO NORMAL CONDITIONS OF TRANSPORT

Package mass	Free drop distance	
Kilograms (pounds)	Meters	(Feet)
<Mass 5000 (11,000)	1.2	(4)
5,000 (11,000) Mass to 10,000 (22,000)	0.9	(3)
10,000 (22,000) Mass to 15,000 (33,000)	0.6	(2)
>15,000 (33,000) Mass	0.3	(1)

(2) For packages containing fissile material, the free drop test specified in paragraph (c)(1) of this section must be preceded by a free drop from a height of 0.3 m (1 foot) on each corner, or in the case of cylindrical packages, onto each of the quarters of each rim.

(3) For fiberboard or wood rectangular packages with a mass of 50 kg (110 pounds) or less, a separate specimen must be subjected to a free drop onto each corner from a height of 0.3 m (1 foot).

(4) For cylindrical fiberboard packages with a mass of 100 kg (220 pounds) or less, a separate specimen must be subjected to a free drop onto each of the quarters of each rim from a height of 0.3 m (1 foot).

(5) The target for the free drop test must be a flat, horizontal surface of such mass and rigidity that any increase in its resistance to displacement or deformation upon impact by the specimen would not significantly increase the damage to the specimen.

(d) *Stacking test.* (1) The specimen must be subjected for a period of at least 24 hours to a compressive load equivalent to the greater of the following:

(i) A total weight equal to five times the maximum weight of the package; or

(ii) The equivalent of 13 kilopascals (1.9 psi) multiplied by the vertically projected area of the package.

(2) The compressive load must be applied uniformly to two opposite sides of the specimen, one of which must be the base on which the package would normally rest.

(e) *Penetration test.* For the penetration test, the specimen must be placed on a rigid, flat, horizontal surface that will not move significantly while the test is being performed.

ED_001691B_00009240

(1) A bar of 3.2 cm (1.25 inches) in diameter with a hemispherical end and a mass of 6 kg (13.2 pounds) must be dropped and directed to fall with its longitudinal axis vertical, onto the center of the weakest part of the specimen, so that, if it penetrates far enough, it will hit the containment system. The bar may not be significantly deformed by the test; and

(2) The height of the drop of the bar measured from its lower end to the intended point of impact on the upper surface of the specimen must be 1 m (3.3 feet) or greater.

[Amdt. 173–244, 60 FR 50307, Sept. 28, 1995, as amended by Amdt. 173–244, 61 FR 20753, May 8, 1996; 66 FR 45380, Aug. 28, 2001; 69 FR 3692, Jan. 26, 2004; 70 FR 56099, Sept. 23, 2005; 79 FR 40617, July 11, 2014]

§ 173.466 Additional tests for Type A packagings designed for liquids and gases.

(a) In addition to the tests prescribed in § 173.465, Type A packagings designed for liquids and gases must be capable of withstanding the following tests in this section. The tests are successful if the requirements of § 173.412(k) are met.

(1) *Free drop test.* The packaging specimen must drop onto the target so as to suffer the maximum damage to its containment. The height of the drop measured from the lowest part of the packaging specimen to the upper surface of the target must be 9 m (30 feet) or greater. The target must be as specified in § 173.465(c)(5).

(2) *Penetration test.* The specimen must be subjected to the test specified in § 173.465(e) except that the height of the drop must be 1.7 m (5.5 feet).

(b) [Reserved]

[Amdt. 173–244, 60 FR 50307, Sept. 28, 1995, as amended at 66 FR 45380, Aug. 28, 2001; 79 FR 40617, July 11, 2014; 80 FR 1163, Jan. 8, 2015]

§ 173.467 Tests for demonstrating the ability of Type B and fissile materials packagings to withstand accident conditions in transportation.

Each Type B packaging or packaging for fissile material must meet the test requirements prescribed in 10 CFR part 71 for ability to withstand accident conditions in transportation.

§ 173.468 Test for LSA-III material.

(a) LSA-III Class 7 (radioactive) material must meet the test requirement of paragraph (b) of this section. Any differences between the material to be transported and the test material must be taken into account in determining whether the test requirements have been met.

(b) *Test method.* (1) The specimen representing no less than the entire contents of the package must be immersed for 7 days in water at ambient temperature.

(2) The volume of water to be used in the test must be sufficient to ensure that at the end of the test period the free volume of the unabsorbed and unreacted water remaining will be at least 10% of the volume of the specimen itself.

(3) The water must have an initial pH of 6–8 and a maximum conductivity of 10 micromho/cm at 20 °C (68 °F).

(4) The total activity of the free volume of water must be measured following the 7 day immersion test and must not exceed 0.1 A_2.

§ 173.469 Tests for special form Class 7 (radioactive) materials.

(a) Special form Class 7 (radioactive) materials must meet the test requirements of paragraph (b) of this section. Each solid Class 7 (radioactive) material or capsule specimen to be tested must be manufactured or fabricated so that it is representative of the actual solid material or capsule that will be transported with the proposed radioactive content duplicated as closely as practicable. Any differences between the material to be transported and the test material, such as the use of non-radioactive contents, must be taken into account in determining whether the test requirements have been met. The following additional conditions apply:

(1) A different specimen may be used for each of the tests;

(2) The specimen may not break or shatter when subjected to the impact, percussion, or bending tests;

(3) The specimen may not melt or disperse when subjected to the heat test; and

ED_001691B_00009240

(4) After each test, leaktightness or indispersibility of the specimen must be determined by—

(i) A method no less sensitive than the leaching assessment prescribed in paragraph (c) of this section. For a capsule resistant to corrosion by water, and which has an internal void volume greater than 0.1 milliliter, an alternative to the leaching assessment is a demonstration of leaktightness of 10^{-4} torr-l/s (1.3×10^{-4} atm-cm^3/s) based on air at 25 °C (77 °F) and one atmosphere differential pressure for solid radioactive content, or 10^{-6} torr-l/s (1.3×10^{-6} atm-cm^3/s) for liquid or gaseous radioactive content; or

(ii) A specimen that comprises or simulates Class 7 (radioactive) material contained in a sealed capsule need not be subjected to the leaching assessment specified in paragraph (c) of this section provided it is alternatively subjected to any of the volumetric leakage assessment tests prescribed in the International Organization for Standardization document ISO 9978–1992(E): ''Radiation protection—Sealed radioactive sources—Leakage test methods'' (IBR, see § 171.7 of this subchapter).

(b) *Test methods*—(1) *Impact Test.* The specimen must fall onto the target from a height of 9 m (30 feet) or greater. The target must be as specified in § 173.465(c)(5).

(2) *Percussion Test.* (i) The specimen must be placed on a sheet of lead that is supported by a smooth solid surface, and struck by the flat face of a steel billet so as to produce an impact equivalent to that resulting from a free drop of 1.4 kg (3 pounds) through 1 m (3.3 feet).

(ii) The flat face of the billet must be 2.5 cm (1 inch) in diameter with the edge rounded off to a radius of 3 mm ± 0.3 mm (0.12 inch ± 0.012 inch).

(iii) The lead must be of hardness number 3.5 to 4.5 on the Vickers scale and thickness not more than 25 mm (1 inch), and must cover an area greater than that covered by the specimen.

(iv) A fresh surface of lead must be used for each impact.

(v) The billet must strike the specimen so as to cause maximum damage.

(3) *Bending test.* (i) This test applies only to long, slender sources with a length of 10 cm (4 inches) or greater and a length to width ratio of 10 or greater.

(ii) The specimen must be rigidly clamped in a horizontal position so that one half of its length protrudes from the face of the clamp.

(iii) The orientation of the specimen must be such that the specimen will suffer maximum damage when its free end is struck by the flat face of a steel billet.

(iv) The billet must strike the specimen so as to produce an impact equivalent to that resulting from a free vertical drop of 1.4 kg (3 pounds) through 1 m (3.3 feet).

(v) The flat face of the billet must be 2.5 cm (1 inch) in diameter with the edges rounded off to a radius of 3 mm ±0.3 mm (.12 inch ±0.012 inch).

(4) *Heat test.* The specimen must be heated in air to a temperature of not less than 800 °C (1475 °F), held at that temperature for a period of 10 minutes, and then allowed to cool.

(c) *Leaching assessment methods.* (1) For indispersible solid material—

(i) The specimen shall be immersed for seven days in water at ambient temperature. The volume of water to be used in the test shall be sufficient to ensure that at the end of the seven day test period the free volume of the unabsorbed and unreacted water remaining shall be at least 10% of the volume of the solid test sample itself. The water shall have an initial pH of 6–8 and a maximum conductivity of 1 mS/m (10 micromho/cm) at 20 °C (68 °F).

(ii) The water with specimen must then be heated to a temperature of 50 °C ±5° (122 °F ±9°) and maintained at this temperature for four hours.

(iii) The activity of the water must then be determined.

(iv) The specimen shall then be kept for at least seven days in still air at not less than 30 °C (86 °F) and relative humidity not less than 90%.

(v) The specimen must then be immersed in water under the same conditions as in paragraph (c)(1)(i) of this section, and the water with specimen must be heated to 50 C ±5° (122 °F ±9°) and maintained at that temperature for four hours.

(vi) The activity of the water must then be determined. The activities determined in paragraph (c)(1)(iii) of this

ED_001691B_00009240

section and this paragraph, (c)(1)(vi), may not exceed 2 kilobecquerels (0.05 microcurie).

(2) For encapsulated material—

(i) The specimen shall be immersed in water at ambient temperature. The water shall have an initial pH of 6–8 and a maximum conductivity of 1 mS/m (10 micromho/cm) at 20 °C (68 °F).

(ii) The water and specimen must be heated to a temperature of 50 °C ±5° (122 °F ±9°) and maintained at this temperature for four hours.

(iii) The activity of the water must then be determined.

(iv) The specimen shall then be kept for at least seven days in still air at not less than 30 °C (86 °F) and relative humidity not less than 90%.

(v) The process in paragraphs (c)(2)(i), (c)(2)(ii), and (c)(2)(iii) of this section must be repeated.

(vi) The activity determined in paragraph (c)(2)(iii) of this section may not exceed 2 kilobecquerels (0.05 microcurie).

(d) A specimen that comprises or simulates Class 7 (radioactive) material contained in a sealed capsule need not be subjected to—

(1) The impact test and the percussion test of this section provided that the mass of the special form material is—

(i) Less than 200 g and it is alternatively subjected to the Class 4 impact test prescribed in ISO 2919 (IBR, see §171.7 of this subchapter), or

(ii) Less than 500 g and it is alternatively subjected to the Class 5 impact test prescribed in ISO 2919 (IBR, see §171.7 of this subchapter); and

(2) The heat test of this section, provided the specimen is alternatively subjected to the Class 6 temperature test specified in the International Organization for Standardization document ISO 2919 (IBR, see §171.7 of this subchapter).

(e) Special form materials that were successfully tested prior to October 1, 2014 in accordance with the requirements of paragraph (d) of this section in effect prior to October 1, 2014 may continue to be offered for transportation and transported without additional testing under this section.

[Amdt. 173–244, 60 FR 50307, Sept. 28, 1995, as amended at 63 FR 37461, July 10, 1998; 64 FR 51919, Sept. 27, 1999; 66 FR 45184, 45380, 45381, Aug. 28, 2001; 68 FR 75742, 75747, Dec. 31, 2003; 69 FR 3692, Jan. 26, 2004; 79 FR 40617, July 11, 2014]

§ 173.471 Requirements for U.S. Nuclear Regulatory Commission approved packages.

In addition to the applicable requirements of the U.S. Nuclear Regulatory Commission (NRC) and other requirements of this subchapter, any offeror of a Type B(U), Type B(M), or fissile material package that has been approved by the NRC in accordance with 10 CFR part 71 must also comply with the following requirements:

(a) The offeror shall be registered with the USNRC as a party to the packaging approval, and make the shipment in compliance with the terms of the packaging approval;

(b) The outside of each package must be durably and legibly marked with the package identification marking indicated in the USNRC packaging approval;

(c) Each shipping paper related to the shipment of the package must bear the package identification marking indicated in the USNRC packaging approval;

(d) Before export shipment of the package, the offeror shall obtain a U.S. Competent Authority Certificate for that package design, or if one has already been issued, the offeror shall register in writing (including a description of the quality assurance program required by 10 CFR part 71) with the U.S. Competent Authority as a user of the certificate. (NOTE: The person who originally applies for a U.S. Competent Authority Certificate will be registered automatically.) The registration request must be sent to the Associate Administrator for Hazardous Materials Safety (PHH–23), Department of Transportation, East Building, 1200 New Jersey Avenue, SE., Washington DC 20590–0001. Alternatively, the application with any attached supporting documentation in an appropriate format may be submitted by facsimile (fax) to (202) 366–3753 or (202) 366–3650, or by

ED_001691B_00009240

electronic mail (e-mail) to "*ramcert@dot.gov.*" Upon registration, the offeror will be furnished with a copy of the certificate. The offeror shall then submit a copy of the U.S. Competent Authority Certificate applying to that package design to the national competent authority of each country into or through which the package will be transported, unless the offeror has documentary evidence that a copy has already been furnished; and

(e) Each request for a U.S. Competent Authority Certificate as required by the IAEA regulations must be submitted in writing to the Associate Administrator. The request must be in triplicate and include copies of the applicable USNRC packaging approval, USNRC Quality Assurance Program approval number, and a reproducible 22 cm × 30 cm (8.5″ × 11″) drawing showing the make-up of the package. The request and accompanying documentation must be sent to the Associate Administrator for Hazardous Materials Safety (PHH–23), Department of Transportation, East Building, 1200 New Jersey Avenue, SE., Washington DC 20590–0001. Alternatively, the application with any attached supporting documentation in an appropriate format may be submitted by facsimile (fax) to (202) 366–3753 or (202) 366–3650, or by electronic mail (e-mail) to "*ramcert@dot.gov.*" Each request is considered in the order in which it is received. To allow sufficient time for consideration, requests must be received at least 90 days before the requested effective date.

[Amdt. 173–244, 60 FR 50307, Sept. 28, 1995, as amended at 66 FR 45379, Aug. 28, 2001; 67 FR 61014, Sept. 27, 2002; 69 FR 3693, Jan. 26, 2004; 70 FR 56099, Sept. 23, 2005; 72 FR 55693, Oct. 1, 2007]

§ 173.472 Requirements for exporting DOT Specification Type B and fissile packages.

(a) Any offeror who exports a DOT Specification Type B or fissile material package authorized by §173.416 or §173.417 shall comply with paragraphs (b) through (f) of this section.

(b) The shipment must be made in accordance with the conditions of the U.S. Certificate of Competent Authority.

(c) The outside of each package must be durably and legibly marked with the package identification marking indicated in the U.S. Competent Authority Certificate.

(d) Each shipping paper related to the shipment of the package must bear the package identification marking indicated in the U.S. Competent Authority Certificate.

(e) Before export of the package, the offeror shall obtain a U.S. Competent Authority Certificate for that package design, or if one has already been issued, the offeror shall register in writing (including a description of the quality assurance program required by 10 CFR part 71, subpart H, or 49 CFR 173.474 and 173.475) with the U.S. Competent Authority as a user of the certificate. Upon registration, the offeror will be furnished with a copy of the certificate. The offeror shall then submit a copy of the U.S. Competent Authority Certificate applying to that package design to the national competent authority of each country into or through which the package will be transported, unless the offeror has documentary evidence that a copy has already been furnished.

(f) Each request for a U.S. Competent Authority Certificate as required by the IAEA regulations must be submitted in writing to the Associate Administrator. The request must be in triplicate and must include a description of the quality assurance program required by 10 CFR part 71, subpart H, or 49 CFR 173.474 and 173.475, and a reproducible 22 cm × 30 cm (8.5″ × 11″) drawing showing the make-up of the package. A copy of the USNRC quality assurance program approval will satisfy the requirement for describing the quality assurance program. The request and accompanying documentation may be sent by mail or other delivery service. Alternatively, the request with any attached supporting documentation submitted in an appropriate format may be sent by facsimile (fax) to (202) 366–3753 or (202) 366–3650, or by electronic mail (e-mail) to "*ramcert@dot.gov.*" Each request is considered in the order in which it is received. To allow sufficient time for

ED_001691B_00009240

consideration, requests must be received at least 90 days before the requested effective date.

[Amdt. 173–244, 60 FR 50307, Sept. 28, 1995, as amended at 66 FR 45379, Aug. 28, 2001; 67 FR 61014, Sept. 27, 2002]

§ 173.473 Requirements for foreign-made packages.

In addition to other applicable requirements of this subchapter, each offeror of a foreign-made Type B(U), Type B(M), Type C, Type CF, Type H(U), Type H(M), or fissile material package for which a Competent Authority Certificate is required by IAEA's "Regulations for the Safe Transport of Radioactive Material, SSR–6, " (IBR, see § 171.7 of this subchapter) shall also comply with the following requirements:

(a) Prior to the shipment of such a package of Class 7 (radioactive) materials into or from the U.S., the offeror shall—

(1) Have the foreign competent authority certificate revalidated by the U.S. Competent Authority, unless this has been done previously. Each request for revalidation must be in triplicate, contain all the information required by Section VIII of the IAEA regulations in "IAEA Regulations for the Safe Transport of Radioactive Material, SSR–6" (IBR, see § 171.7 of this subchapter), and include a copy in English of the foreign competent authority certificate. The request and accompanying documentation must be sent to the Associate Administrator for Hazardous Materials Safety (PHH–23), Department of Transportation, East Building, 1200 New Jersey Avenue SE., Washington, DC 20590–0001. Alternatively, the request with any attached supporting documentation submitted in an appropriate format may be sent by facsimile (fax) to (202) 366–3753 or (202) 366–3650, or by electronic mail to "*ramcert@dot.gov.*" Each request is considered in the order in which it is received. To allow sufficient time for consideration, requests must be received at least 90 days before the requested effective date;

(2) Register in writing with the U.S. Competent Authority as a user of the package covered by the foreign competent authority certificate and its U.S. revalidation. Alternatively, the registration request with any attached supporting documentation submitted in an appropriate format may be sent by facsimile (fax) to (202) 366–3753 or (202) 366–3650, or by electronic mail (e-mail) to "*ramcert@dot.gov.*" If the offeror is requesting the revalidation, registration is automatic; and

(3) Supply to the carrier, upon request, the applicable competent authority certificates. However, the competent authority certificates are not required to accompany the packages to which they apply.

(b) The outside of each package must be durably and legibly marked with the competent authority identification marking indicated on the Competent Authority Certificate and revalidation.

(c) Each shipping paper for a shipment of Class 7 (radioactive) materials must bear a notation of the package identification marking indicated on the competent authority certificate or revalidation.

(d) All requirements of the foreign competent authority certificate and the U.S. Competent Authority revalidation must be fulfilled.

[Amdt. 173–244, 60 FR 50307, Sept. 28, 1995, as amended at 66 FR 45379, Aug. 28, 2001; 67 FR 16015, Sept. 27, 2002; 68 FR 75742, 75747, Dec. 31, 2003; 69 FR 3693, Jan. 26, 2004; 79 FR 40617, July 11, 2014; 80 FR 1163, Jan. 8, 2015]

§ 173.474 Quality control for construction of packaging.

Prior to the first use of any packaging for the shipment of Class 7 (radioactive) material, the offeror shall determine that—

(a) The packaging meets the quality of design and construction requirements as specified in this subchapter; and

(b) The effectiveness of the shielding, containment and, when required, the heat transfer characteristics of the package, are within the limits specified for the package design.

§ 173.475 Quality control requirements prior to each shipment of Class 7 (radioactive) materials.

Before each shipment of any Class 7 (radioactive) materials package, the offeror must ensure, by examination or appropriate tests, that—

ED_001691B_00009240

(a) The packaging is proper for the contents to be shipped;

(b) The packaging is in unimpaired physical condition, except for superficial marks;

(c) Each closure device of the packaging, including any required gasket, is properly installed, secured, and free of defects;

(d) For fissile material, each moderator and neutron absorber, if required, is present and in proper condition;

(e) Each special instruction for filling, closing, and preparation of the packaging for shipment has been followed;

(f) Each closure, valve, or other opening of the containment system through which the radioactive content might escape is properly closed and sealed;

(g) Each packaging containing liquid in excess of an A_2 quantity and intended for air shipment has been tested to show that it will not leak under an ambient atmospheric pressure of not more than 25 kPa, absolute (3.6 psia). The test must be conducted on the entire containment system, or on any receptacle or vessel within the containment system, to determine compliance with this requirement;

(h) The internal pressure of the containment system will not exceed the design pressure during transportation; and

(i) External radiation and contamination levels are within the allowable limits specified in this subchapter.

§ 173.476 Approval of special form Class 7 (radioactive) materials.

(a) Each offeror of special form Class 7 (radioactive) materials must maintain on file for at least two years after the offeror's latest shipment, and provide to the Associate Administrator on request, a complete safety analysis, including documentation of any tests, demonstrating that the special form material meets the requirements of § 173.469. An IAEA Certificate of Competent Authority issued for the special form material may be used to satisfy this requirement.

(b) Prior to the first export shipment of a special form Class 7 (radioactive) material from the United States, each offeror shall obtain a U.S. Competent Authority Certificate for the specific material. For special form material manufactured outside the United States, an IAEA Certificate of Competent Authority from the country of origin may be used to meet this requirement.

(c) Each request for a U.S. Competent Authority Certificate as required by the IAEA regulations must be submitted in writing, in triplicate, by mail or other delivery service to the Associate Administrator. Alternatively, the request with any attached supporting documentation submitted in an appropriate format may be sent by facsimile (fax) to (202) 366–3753 or (202) 366–3650, or by electronic mail (e-mail) to "*ramcert@dot.gov.*". Each request is considered in the order in which it is received. To allow sufficient time for consideration, requests must be received at least 90 days before the requested effective date. Each petition for a U.S. Competent Authority Certificate must include the following information:

(1) A detailed description of the material, or if a capsule, a detailed description of the contents. Particular reference must be made to both physical and chemical states;

(2) A detailed statement of the capsule design and dimensions, including complete engineering drawings [22cm × 30cm (8½ inches × 11 inches)] and schedules of material, and methods of construction;

(3) A statement of the tests that have been made and their results; or evidence based on calculative methods to show that the material is able to pass the tests; or other evidence that the special form Class 7 (radioactive) material complies with § 173.469;

(4) For the original request for a Competent Authority Certificate, evidence of a quality assurance program based on international, national or other standards, for the design, manufacture, testing, documentation, use, maintenance and inspection, as appropriate, of all special form material offered for transport by the requester; and

(5) A description of any proposed preshipment actions, such as leak testing, for use in the consignment of special form radioactive material for transport.

ED_001691B_00009240

(d) Paragraphs (a) and (b) of this section do not apply in those cases where A_1 equals A_2 and the material is not required to be described on the shipping papers as ''Radioactive Material, Type A Package, Special Form'' or as ''Radioactive Material, Type A Package, Special Form, Fissile.''

[Amdt. 173–244, 60 FR 50307, Sept. 28, 1995, as amended at 66 FR 45379, Aug. 28, 2001; 67 FR 61015, Sept. 27, 2002; 69 FR 3693, Jan. 26, 2004; 78 FR 60754, Oct. 2, 2013; 79 FR 40617, July 11, 2014]

§ 173.477 Approval of packagings containing greater than 0.1 kg of nonfissile or fissile-excepted uranium hexafluoride.

(a) Each offeror of a package containing more than 0.1 kg of uranium hexafluoride must maintain on file for at least two years after the offeror's latest shipment, and provide to the Associate Administrator on request, a complete safety analysis, including documentation of any tests, demonstrating that the package meets the requirements of § 173.420. An IAEA Certificate of Competent Authority issued for the design of the packaging containing greater than 0.1 kg of nonfissile or fissile-exempted uranium hexafluoride may be used to satisfy this requirement.

(b) Prior to the first export shipment of a package containing greater than 0.1 kg of uranium hexafluoride from the United States, each offeror shall obtain a U.S. Competent Authority Certificate for the packaging design. For packagings manufactured outside the United States, each offeror shall comply with § 173.473.

(c) Each request for a U.S. Competent Authority Certificate as required by the IAEA regulations must be submitted in writing, in triplicate, by mail or other delivery service to the Associate Administrator. Alternatively, the request with any attached supporting documentation submitted in an appropriate format may be sent by facsimile (fax) to (202) 366–3753 or (202) 366–3650, or by electronic mail (e-mail) to *ramcert@dot.gov*. Each request is considered in the order in which it is received. To allow sufficient time for consideration, requests must be received at least 90 days before the requested effective date. Each request for a U.S. Competent Authority Certificate must include the following information:

(1) A safety analysis report which, at a minimum, provides a detailed description of the packaging and contents; a description of the manufacturing process used for the packaging; and details of the tests conducted and copy of their results, evidence based on calculative methods to show that the package is able to pass the tests, or other evidence that the package complies with § 173.420; and

(2) For the original request for a Competent Authority Certificate, evidence of a quality assurance program.

[69 FR 3693, Jan. 26, 2004, as amended at 79 FR 40617, July 11, 2014]

Subparts J–O [Reserved]

APPENDIX A TO PART 173 [RESERVED]

APPENDIX B TO PART 173—PROCEDURE FOR TESTING CHEMICAL COMPATIBILITY AND RATE OF PERMEATION IN PLASTIC PACKAGING AND RECEPTACLES

1. The purpose of this procedure is to determine the chemical compatibility and permeability of liquid hazardous materials packaged in plastic packaging and receptacles. Alternatives for this procedure are permitted as specified in § 173.24(e)(3)(iii) of this subchapter.

2. Compatibility and rate of permeation are determined by subjecting full size plastic containers (or smaller containers as permitted in paragraph 4 of this appendix) and hazardous material lading to one of the following combinations of time and temperature:

a. Test Method 1: 180 days at a temperature no lower than 18 °C. (64 °F.)

b. Test Method 2: 28 days at a temperature no lower than 50 °C. (122 °F.)

c. Test Method 3: 14 days at a temperature no lower than 60 °C. (140 °F.)

3. Regardless of which test method is used, at least three sample containers shall be tested for each combination of hazardous material and size and design of container. Fill containers to rated capacity with the specific hazardous material (at the concentration to be transported) and close as for shipment. For the first and last 24 hours of storage under the selected test method, place the containers with closures downward, except that containers fitted with a vent are so

ED_001691B_00009240

placed on each occasion for five minutes only.

4. For testing under Test Method 2 or 3 in those instances where it is not practicable to use full size containers, smaller containers may be used. The small container shall be manufactured by the same process as the larger container (for example, using the same method of molding and processing temperatures) and be made of identical resins, pigments and additives.

5. Determine filled container weight or net weight of contents both before and after storage under the selected test method. Rate of permeation is determined from loss of hazardous materials contents, during the conduct of the test, expressed as a percentage of the original weight.

6. After storage under the selected test method, the container shall be drained, rinsed, filled to rated capacity with water and, with filled container at ambient temperature, dropped from a height determined in accordance with §178.603(e) of this subchapter onto a rigid non-resilient, flat and horizontal surface.

7. Each of the following constitute test failure:

a. Visible evidence of permanent deformation due to vapor pressure build-up or collapse of walls, deterioration, swelling, crazing, cracking, excessive corrosion, oxidization, embrittlement, leakage, rupture or other defects likely to cause premature failure or a hazardous condition.

b. For materials meeting the definition of a poison according to this subchapter, a rate of permeation in excess of 0.5% determined over the test period. For all other hazardous materials, a rate of permeation in excess of 2.0% determined over the test period.

[Amdt. 173–176, 49 FR 24691, June 14, 1984, as amended by Amdt. 173–224, 55 FR 52670 Dec. 21, 1990; 56 FR 66279, Dec. 20, 1991; Amdt. 173–234, 58 FR 51533, Oct. 1, 1993; 66 FR 45379, Aug. 28, 2001]

APPENDIX C TO PART 173—PROCEDURE FOR BASE-LEVEL VIBRATION TESTING

Base-level vibration testing shall be conducted as follows:

1. Three sample packagings, selected at random, must be filled and closed as for shipment. A non-hazardous material may be used in place of the hazardous material if it has essentially the same physical characteristics.

2. The three packages must be placed on a vibrating platform that has a vertical double-amplitude (peak-to-peak displacement) of one inch. The packages should be constrained horizontally to prevent them from falling off the platform, but must be left free to move vertically, bounce and rotate.

3. The test must be performed continuously for one hour at a frequency that causes each package to be raised from the vibrating platform to such a degree that a piece of material of approximately 1.6 mm (0.063 inch) thickness (such as steel strapping or paperboard) can be passed between the bottom of any package and the platform.

4. Immediately following the period of vibration, each package shall be removed from the platform, turned on its side and observed for any evidence of leakage.

5. Rupture or leakage from any of the packages constitutes failure of the test.

[Amdt. 173–224, 55 FR 52671, Dec. 21, 1990]

APPENDIX D TO PART 173—TEST METHODS FOR DYNAMITE (EXPLOSIVE, BLASTING, TYPE A)

1. TEST METHOD D–1—LEAKAGE TEST

A wooden stick, 114 mm (4.5 inches) long and 4.8 mm (0.2 inch) inch in diameter, with a sharpened end is used to punch 5 holes in one end of the wrapper of a dynamite cartridge. A cork stopper is placed on the bottom of a glass volumetric cylinder. The dynamite cartridge is placed, perforated end down, resting on the cork stopper in the cylinder. The entire assembly is placed in an oven at 38 °C (100 °F) for 48 hours and then examined visually for evidence of leakage.

2. TEST METHOD D–2—*Centrifugal Exudation Test*

The test apparatus consists of a glass tube, 135 mm (5.3 inches) long and one inch in diameter, with both ends open, and is assembled in the following manner:

(a) Close the bottom with a plastic plug of diameter equal to the inner diameter of the glass tube;

(b) Place a small amount of absorbent cotton on top of the plug;

(c) Place a plastic disk that matches the inner diameter to the glass tube and has seven small perforations on top of the cotton; and

(d) Place 10 g (0.35 ounce) of the dynamite sample on top of the disk.

The assembled glass tube is then placed in a hand-operated centrifuge and spun for one minute at 600 rpm (revolutions per minute). The dynamite sample is then removed from the glass tube and weighed to determine the percent of weight loss.

3. TEST METHOD D–3—*Compression Exudation Test*

The entire apparatus for this test is shown in Figure 1 of this appendix. The test is conducted using the following procedures:

(a) A glass tube, 135 mm (5.3 inches) long and one inch in diameter, is held on a wooden base;

ED_001691B_00009240

(b) A small amount of absorbent cotton is placed into the bottom of the glass tube;

(c) Ten g (0.35 ounce) of dynamite sample are placed on top of the cotton in the glass tube;

(d) A small amount of absorbent cotton is placed on top of the dynamite sample;

(e) A plastic disk that matches the inner diameter of the glass tube and has seven small perforations is placed on top of the cotton;

(f) A plastic plug matching the inner diameter of the glass tube is then placed on top of the disk;

(g) The glass tube assembly is placed under the compression rod, and compression is applied by means of the weight on the metal lever rod. The sample is compressed for one minute; and

(h) The dynamite sample is then removed from the glass tube and weighed to determine the percent of weight loss.

FIGURE 1
COMPRESSION APPARATUS

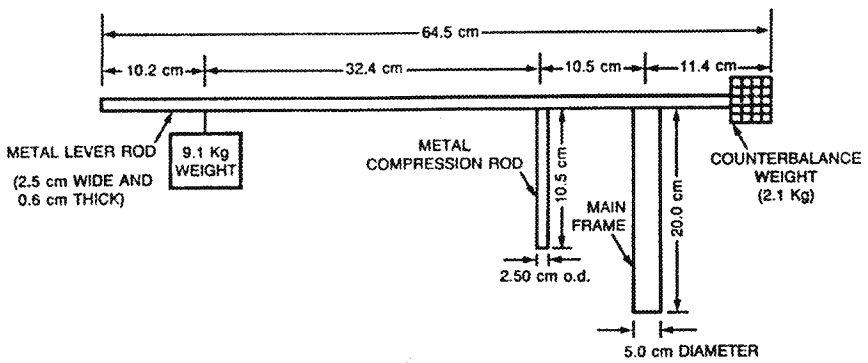

BILLING CODE 4910-60-C

[Amdt. 173-224, 55 FR 52671, Dec. 21, 1990, as amended by Amdt. 173-234, 58 FR 51533, Oct. 1, 1993]

APPENDIXES E–G TO PART 173 [RESERVED]

APPENDIX H TO PART 173—METHOD OF TESTING FOR SUSTAINED COMBUSTIBILITY

1. METHOD

The method describes a procedure for determining if the material when heated under the test conditions and exposed to an external source of flame applied in a standard manner sustains combustion.

2. PRINCIPLE OF THE METHOD

A metal block with a concave depression (test portion well) is heated to a specified temperature. A specified volume of the material under test is transferred to the well, and its ability to sustain combustion is noted after application and subsequent removal of a standard flame under specified conditions.

3. APPARATUS

A combustibility tester consisting of a block of aluminum alloy or other corrosion-resistant metal of high thermal conductivity is used. The block has a concave well and a pocket drilled to take a thermometer. A small gas jet assembly on a swivel is attached to the block. The handle and gas inlet for the gas jet may be fitted at any convenient angle to the gas jet. A suitable apparatus is shown in Figure 32.5.2.1 of the UN Manual of Test and Criteria (IBR, see (171.7 of this subchapter), and the essential dimensions are given in Figures 32.5.2.1 and 32.5.2.2

ED_001691B_00009240

of the UN Manual and Tests and Criteria. The following equipment is needed:

(a) *Gauge,* for checking that the height of the center of the gas jet above the top of the test portion well is 2.2 mm (*see* Figure 32.5.2.1);

(b) *Thermometer,* mercury in glass, for horizontal operation, with a sensitivity not less than 1 mm/ °C, or other measuring device of equivalent sensitivity permitting reading at 0.5 °C intervals. When in position in the block, the thermometer bulb must be surrounded with thermally conducting thermoplastic compound;

(c) *Hotplate,* fitted with a temperature-control device. (Other types of apparatus with suitable temperature-control facilities may be employed to heat the metal block);

(d) *Stopwatch,* or other suitable timing device;

(e) *Syringe,* capable of delivering 2 mL to an accuracy of ±0.1 mL; and

(f) *Fuel source,* butane test fuel.

4. SAMPLING

The sample must be representative of the material to be tested and must be supplied and kept in a tightly closed container prior to test. Because of the possibility of loss of volatile constituents, the sample must receive only the minimum treatment necessary to ensure its homogeneity. After removing each test portion, the sample container must be immediately closed tightly to ensure that no volatile components escape from the container; if this closure is incomplete, an entirely new sample must be taken.

5. PROCEDURE

Carry out the determination in triplicate.

WARNING—Do not carry out the test in a small confined area (for example a glove box) because of the hazard of explosions.

(a) It is essential that the apparatus be set up in a completely draft-free area (see warning) and in the absence of strong light to facilitate observation of flash, flame, etc.

(b) Place the metal block on the hotplate or heat the metal block by other suitable means so that its temperature, as indicated by the thermometer placed in the metal block, is maintained at the specified temperature within a tolerance of ±1 °C. For the appropriate test temperature, see paragraph 5.(h) of this appendix. Correct this temperature for the difference in barometric pressure from the standard atmospheric pressure (101.3 kPa) by raising the test temperature for a higher pressure or lowering the test temperature for a lower pressure by 1.0 °C for each 4 kPa difference. Ensure that the top of the metal block is exactly horizontal. Use the gauge to check that the jet is 2.2 mm above the top of the well when in the test position.

(c) Light the butane test fuel with the jet away from the test position (i.e. in the "off" position, away from the well). Adjust the size of the flame so that it is 8 mm to 9 mm high and approximately 5 mm wide.

(d) Using the syringe, take from the sample container at least 2 mL of the sample and rapidly transfer a test portion of 2 mL ±0.1 mL to the well of the combustibility tester and immediately start the timing device.

(e) After a heating time of 60 seconds (s), by which time the test portion is deemed to have reached its equilibrium temperature, and if the test fluid has not ignited, swing the test flame into the test position over the edge of the pool of liquid. Maintain it in this position for 15 s and then return it to the "off" position while observing the behavior of the test portion. The test flame must remain lighted throughout the test.

(f) For each test observe and record:

(i) whether there is ignition and sustained combustion or flashing, or neither, of the test portion before the test flame is moved into the test position;

(ii) whether the test portion ignites while the test flame is in the test position, and, if so, how long combustion is sustained after the test flame is returned to the "off" position.

(g) If sustained combustion interpreted in accordance with paragraph 6. of this appendix is not found, repeat the complete procedure with new test portions, but with a heating time of 30 s.

(h) If sustained combustion interpreted in accordance with paragraph 6. of this appendix is not found at a test temperature of 60 °C (140 °F), repeat the complete procedure with new test portions, but at a test temperature of 75 °C (167 °F). In the case of a material which has a flash point above 60 °C (140 °F) and below 93 °C (200 °F), if sustained combustion interpreted in accordance with paragraph 6. of this appendix is not found at a test temperature of 5 °C (9 °F) above its flash point, repeat the complete procedure with new test portions, but at a test temperature of 20 °C (36 °F) above its flash point.

6. INTERPRETATION OF OBSERVATIONS

The material must be assessed either as not sustaining combustion or as sustaining combustion. Sustained combustion must be reported at either of the heating times if one of the following occurs with either of the test portions:

(a) When the test flame is in the "off" position, the test portion ignites and sustains combustion;

(b) The test portion ignites while the test flame is in the test position for 15 s, and sustains combustion for more than 15 s after the test flame has been returned to the "off" position.

ED_001691B_00009240

NOTE TO PARAGRAPH 6 OF THIS APPENDIX: Intermittent flashing may not be interpreted as sustained combustion. Normally, at the end of 15 s, the combustion has either clearly ceased or continues. In cases of doubt, the material must be deemed to sustain combustion.

[Amdt. 173–241, 59 FR 67517, Dec. 29, 1994, as amended by Amdt. 173–255, 61 FR 50627, Sept. 26, 1996; 66 FR 45381, Aug. 28, 2001; 68 FR 75747, Dec. 31, 2003; 69 FR 76179, Dec. 20, 2004; 71 FR 78634, Dec. 29, 2006]

PART 174—CARRIAGE BY RAIL

Subpart A—General Requirements

Sec.
174.1 Purpose and scope.
174.2 Limitation on actions by states, local governments, and Indian tribes.
174.3 Unacceptable hazardous materials shipments.
174.5 Carrier's materials and supplies.
174.9 Safety and security inspection and acceptance.
174.14 Movements to be expedited.
174.16 Removal and disposition of hazardous materials at destination.
174.20 Local or carrier restrictions.

Subpart B—General Operating Requirements

174.24 Shipping papers.
174.26 Notice to train crews.
174.50 Nonconforming or leaking packages.

Subpart C—General Handling and Loading Requirements

174.55 General requirements.
174.57 Cleaning cars.
174.59 Marking and placarding of rail cars.
174.61 Transport vehicles and freight containers on flat cars.
174.63 Portable tanks, IM portable tanks, IBCs, Large Packagings, cargo tanks, and multi-unit tank car tanks.
174.67 Tank car unloading.
174.81 Segregation of hazardous materials.

Subpart D—Handling of Placarded Rail Cars, Transport Vehicles and Freight Containers

174.82 General requirements for the handling of placarded rail cars, transport vehicles, freight containers, and bulk packages.
174.83 Switching placarded rail cars, transport vehicles, freight containers, and bulk packagings.
174.84 Position in train of loaded placarded rail cars, transport vehicles, freight containers or bulk packagings when accompanied by guards or technical escorts.
174.85 Position in train of placarded cars, transport vehicles, freight containers, and bulk packagings.
174.86 Maximum allowable operating speed.

Subpart E—Class I (Explosive) Materials

174.101 Loading Class 1 (explosive) materials.
174.102 Forbidden mixed loading and storage.
174.103 Disposition of damaged or astray shipments.
174.104 Division 1.1 or 1.2 (explosive) materials; car selection, preparation, inspection, and certification.
174.105 Routing shipments, Division 1.1 or 1.2 (explosive) materials.
174.106 "Order-Notify" or "C.O.D." shipments, Division 1.1 or 1.2 (explosive) materials.
174.110 Car magazine.
174.112 Loading Division 1.3 and Division 1.2 (explosive) materials (Also see §174.101).
174.114 Record to be made of change of seals on "Cars loaded with Division 1.1 or 1.2 (explosive) materials".
174.115 Loading Division 1.4 (explosive) materials.

Subpart F—Detailed Requirements for Class 2 (Gases) Materials

174.200 Special handling requirements.
174.201 Class 2 (gases) material cylinders.
174.204 Tank car delivery of gases, including cryogenic liquids.
174.290 Materials extremely poisonous by inhalation shipped by, for, or to the Department of Defense.

Subpart G—Detailed Requirements for Class 3 (Flammable Liquid) Materials

174.300 Special handling requirements.
174.304 Class 3 (flammable liquid) materials in tank cars.
174.310 Requirements for the operation of high-hazard flammable trains.

Subparts H–I [Reserved]

Subpart J—Detailed Requirements for Division 6.1 (Poisonous) Materials

174.600 Special handling requirements for materials extremely poisonous by inhalation.
174.615 Cleaning cars.
174.680 Division 6.1 (poisonous) materials with foodstuffs.

ED_001691B_00009240