TECHNICAL MANUAL

GENERAL INSTRUCTIONS

FOR

DEMILITARIZATION/ DISPOSAL OF

CONVENTIONAL MUNITIONS

This copy is a reprint which includes current pages from Changes 1 through 3.

H E A D Q U A R T E R S , D E P A R T M E N T O F T H E A R M Y
MARCH 1982

WARNINGS

BURNING HIGH EXPLOSIVES WHEN INITIATORS OF ANY DESCRIPTION ARE INCLUDED WILL PROBABLY RESULT IN A DETONATION. WHEN BURNING EXPLOSIVES AND/OR MUNITIONS, PROTECTION AGAINST THE POSSIBILITY OF A DETONATION MUST ALWAYS BE 'TAKEN. MIXING OF VARIOUS TYPES OF BULK EXPLOSIVES WILL NOT BE PERMITTED DURING BURNING OPERATIONS. SINCE EXPLOSIVES CONTAIN THEIR OWN OXIDIZER, BURNING EXPLOSIVES CANNOT BE EXTINGUISHED BY SMOTHERING.

BURNING OF ICM'S WILL NOT BE UNDERTAKEN AS THIS COULD CAUSE SCATTERING OR EJECTION OF CARGO. SCATTERED OR EJECTED CARGO IS CONSIDERED ARMED AND HAZARDOUS.

DO NOT ATTEMPT TO DETONATE ANY ITEM USING LESS THAN THE AMOUNT OF EXPLOSIVE CHARGE SPECIFIED IN THE APPLICABLE DEMILITARIZATION DMWR.

BLASTING CAPS WILL NOT BE BURIED. DO NOT WORK WITH ELECTRIC BLASTING CAPS OR OTHER ELECTRO-EXPLOSIVE DEVICES WHILE WEARING STATIC PRODUCING CLOTHING (NYLON, SILK, SYNTHETIC HAIR, ETC.). BLASTING CAPS WILL BE CARRIED IN APPROVED CONTAINERS AND WILL BE KEPT OUT OF DIRECT RAYS OF THE SUN, WHENEVER POSSIBLE. WHEN EXPLOSIVE CHARGES ARE TO BE COVERED WITH EARTH OR TAMPED WITH EARTH, THE CHARGES WILL BE FITTED WITH DETONATING CORD LEADS THAT HAVE A MINIMUM OF 2 METERS (SIX FEET) UNCOVERED ON THE EARTH'S SURFACE.

A SEARCH OF THE SURROUNDING AREA WILL BE MADE AFTER EACH DETONATION. ANY FUZED MUNITION OR ITEMS WHICH MAY HAVE INTERNALLY DAMAGED COMPONENTS THAT HAVE BEEN THROWN FROM THE PILE/PIT WILL BE DETONATED IN PLACE. WHERE OPERATIONS REQUIRE THE USE OF A PERSONNEL SHELTER, THE SHELTER WILL BE LOCATED NOT LESS THAN 91 METERS (300 FEET) FROM THE DISPOSAL SITE AND WILL AFFORD SUBSTANTIAL FRAGMENT-PROOF OVERHEAD COVER AND FRONTAL PROTECTION.

CHANGE)
)
NO. 4)

HEADQUARTERS
DEPARTMENT OF THE ARMY
WASHINGTON, DC, 15 March 2001

Technical Manual
General Instructions
for
Demilitarization/Disposal of
Conventional Munitions

DISTRIBUTION STATEMENT A: Approved for public release; distribution is unlimited.

TM 9-1300-277, 31 March 1982, is changed as follows:

1. Remove old pages and insert new pages as indicated below.
2. New or changed material is indicated by a vertical bar in the outer margin of the page.
3. Added or revised illustrations are indicated by a vertical bar adjacent to the illustration identification number.

Remove Pages	Insert Pages
Change Sheet No. 1	Change Sheet No. 1
A and B	A and B
i thru iv	i thru vi
A-1 thru A-4	A-1 thru A-4

File this change sheet in front of the publication for reference purposes.

By Order of the Secretary of the Army:

ERIC K. SHINSEKI
General, United States Army
Chief of Staff

Official:

JOEL B. HUDSON
Administrative Assistant to the
Secretary of the Army
0106901

DISTRIBUTION: To be distributed in accordance with the initial distribution number (IDN) 340812 requirements for TM 9-1300-277.

CHANGE
No. 3

HEADQUARTERS
DEPARTMENT OF THE ARMY
WASHINGTON, D.C., 17 June 1988

TECHNICAL MANUAL

GENERAL INSTRUCTIONS FOR DEMILITARIZATION/DISPOSAL OF CONVENTIONAL MUNITIONS

TM 9-1300-277, 31 March 1982, is changed as follows:

1. Remove old pages and insert new pages as indicated below. New or changed material is indicated by a vertical bar in the margin of the page. New or revised illustrations are indicated by a vertical bar adjacent to the identification number.

Remove pages	Insert pages
A	A
i and ii	i and ii
5-13 and 5-14	5-13 and 5-14

2. File this change sheet in front of the publication for reference purposes.

By Order of the Secretary of the Army:

CARL E. VUONO
General, United States Army
Chief of Staff

Official:

R. L. DILWORTH
Brigadier General, United States Army
The Adjutant General

Distribution:

To be distributed in accordance with DA Form 12-34B-R, Requirements for General Information applicable to all organizations which have Conventional Munitions Missions.

CHANGE No. 2

HEADQUARTERS
DEPARTMENT OF THE ARMY
WASHINGTON, D.C., 27 August 1985

TECHNICAL MANUAL
GENERAL INSTRUCTIONS
FOR
DEMILITARIZATION/DISPOSAL OF
CONVENTIONAL MUNITIONS

TM 9-1300-277, 31 March 1982, is changed as follows:

1. Remove old pages and insert new pages as indicated below. New or changed material is indicated by a vertical bar in the margin of the page. New or revised illustrations are indicated by a vertical bar adjacent to the identification number.

Remove pages	Insert pages
A	A
i thru iv	i thru iv
4-3 and 4-4	4-3 and 4-4
4-11 and 4-12	4-11 and 4-12
5-1 thru 5-6	5-1 thru 5-6
5-9 thru 5-24	5-9 thru 5-24
6-5 thru 6-12	6-5 thru 6-12
9-1 thru 9-10	9-1 thru 9-10
9-10.1 (9-10.2 blank)	9-10.1 (9-10.2 blank)
9-11 thru 9-18	9-11 thru 9-18
9-18.1 (9-18.2 blank)	9-18.1 (9-18.2 blank)
B-3 and B-4	B-3 and B-4
Index 1 thru Index 6	Index 1 thru Index 6

2. File this change sheet in front of the publication for reference purposes.

By Order of the Secretary of the Army:

JOHN A. WICKHAM, JR.
General, United States Army
Chief of Staff

Official:

DONALD J. DELANDRO
Brigadier General, United States Army
The Adjutant General

Distribution:

To be distributed in accordance with DA Form 12-34B-R, Requirements for General Information applicable to all organizations which have Conventional Munitions Missions.

CHANGE No. 1

HEADQUARTERS
DEPARTMENT OF THE ARMY
WASHINGTON, D.C., *20 Oct. 1983*

TECHNICAL MANUAL

GENERAL INSTRUCTIONS FOR DEMILITARIZATION/DISPOSAL OF CONVENTIONAL MUNITIONS

TM 9-1300-277, 31 March 1982, is changed as follows:

1. Remove old pages and insert new pages as indicated below. New or changed material is indicated by a vertical bar in the margin of the page. New or revised illustrations are indicated by a vertical bar adjacent to the identification number.

Remove pages	Insert pages
A	A
iii and iv	iii and iv
1-1 thru 1-3 (1-4 blank)	1-1 thru 1-3 (1-4 blank)
2-1 thru 2-4	2-1 thru 2-4
4-1 thru 4-4	4-1 thru 4-4
4-7 thru 4-14	4-7 thru 4-14
5-1 thru 5-8	5-1 thru 5-8
5-11 thru 5-18	5-11 thru 5-18
5-22 and 5-23	5-22 and 5-23
6-7 and 6-8	6-7 and 6-8
9-3 and 9-4	9-3 and 9-4
9-7 and 9-8	9-7 and 9-8
9-19 and 9-20	9-19 and 9-20
A-3 and A-4	A-3 and A-4
B-3 thru B-6	B-3 thru B-6
Index 3 thru Index 6	Index 3 thru Index 6

2. File this change sheet in front of the publication for reference purposes.

By Order of the Secretary of the Army:

JOHN A. WICKHAM, JR.
General, United States Army
Chief of Staff

Official:

ROBERT M. JOYCE
Major General, United States Army
The Adjutant General

Distribution:
To be distributed in accordance with DA Form 12-40, Requirements for General Information applicable to all organizations which have Conventional Munitions Missions.

LIST OF EFFECTIVE PAGES

INSERT LATEST CHANGED PAGES. DESTROY SUPERSEDED PAGES.

NOTE The portion of the text affected by the changes is indicated by a vertical line in the outer margins of the page. Changes to illustrations are indicated by a vertical line adjacent to the identification number.

Dates of issue for original and changed pages are:

Original . . . . . 0 . . . . . 31 March 1982
Change . . . . . 1 . . . . . 20 October 1983
Change . . . . . 2 . . . . . 27 August 1985
Change . . . . . 3 . . . . . 17 June 1988
Change . . . . . 4 . . . . . 15 March 2001

TOTAL NUMBER OF PAGES IN THIS PUBLICATION IS 153, CONSISTING OF THE FOLLOWING:

Page No.	*Change No.
Cover	0
Warnings Summary	0
A and B	4
i thru vi	4
1-1 thru 1-3	1
1-4 blank	0
2-1	1
2-2	0
2-3	1
2-4 thru 2-9	0
2-10 blank	0
3-1 thru 3-6	0
4-1	1
4-2	0
4-3 and 4-4	2
4-5 thru 4-7	0
4-8 thru 4-10	1
4-11	0
4-12	2
4-13 and 4-14	1
4-15 thru 4-17	0
4-18 blank	0
5-1 thru 5-3	2
5-4	1
5-5	0
5-6	2
5-7 and 5-8	1
5-9	0
5-10 thru 5-12	2
5-13	3
5-14 and 5-15	2
5-16	0
5-17	1
5-18 and 5-19	2
5-20 and 5-21	0
5-22 thru 5-24	2
6-1 thru 6-5	0
6-6	2
6-7	1
6-8 and 6-9	2
6-10	0
6-11	2
6-12 and 6-13	0
6-14 blank	0
7-1 and 7-2	0
8-1 thru 8-3	0
8-4 blank	0
9-1 thru 9-10	2
9-10.1	2
9-10.2 blank	2
9-11 thru 9-18	2
9-18.1	2
9-18.2 blank	2
9-19	1
9-20	0
10-1 thru 10-4	0
11-1 thru 11-4	0
A-1 thru A-4	0
B-1 and B-2	0
B-3	2
B-4	0
B-5	1
B-6 thru B-10	0
C-1 thru C-8	0
Index 1 thru Index 3	2
Index 4	1
Index 5	0
Index 6	2
Authentication page	0

*Zero in this column indicates an original page

ED_001691B_00007347

TECHNICAL MANUAL

No. 9-1300-277

HEADQUARTERS
DEPARTMENT OF THE ARMY
Washington, DC, *31 MARCH 1982*

General Instructions for Demilitarization/Disposal of Conventional Munitions

REPORTING ERRORS AND RECOMMENDING IMPROVEMENTS

You can help improve this manual. If you find any mistakes or if you know of a way to improve the procedures, please let us know. Mail your letter or DA Form 2028 (Recommended Changes to Publications and Blank Forms) located in the back of this manual directly to Commander, U.S. Army TACOM, Armament Research, Development and Engineering Center, ATTN: AMSTA-AR-WEL-S, Picatinny Arsenal, NJ 07806-5000. You may also send in your recommended changes via electronic mail or by fax. Our e-mail address is LSB@PICA.ARMY.MIL. Our fax number is DSN 880-4633, Commercial (973) 724-4633. A reply will be furnished to you.

Page

CHAPTER 1 INTRODUCTION
Purpose and scope . . . 1-1
Forms, records, and reports . . . 1-1
Waiver actions . . . 1-2
Hazard Classification . . . 1-3

CHAPTER 2 SAFETY AND ACCIDENT PREVENTION
Introduction . . . 2-1
General requirements . . . 2-1
Safety at demilitarization/disposal areas . . . 2-2
Demilitarization of chemical munitions . . . 2-3
Personnel requirements . . . 2-5
Ammunition and explosive handling . . . 2-5
Housekeeping . . . 2-7
Security . . . 2-7
Standing operating procedures (SOP's) . . . 2-8
Procedure in event of electrical storms . . . 2-8
Open storage of ammunition . . . 2-9

CHAPTER 3 TREATMENT OF CHEMICAL AGENT CASUALTIES
General . . . 3-1
Chemical group B munitions . . . 3-2
Chemical group C munitions . . . 3-4
First aid . . . 3-5

CHAPTER 4 DESCRIPTION OF DEMOLITION MATERIALS
General . . . 4-1
Demolition explosive charges . . . 4-1
Demolition charge initiators . . . 4-8
Demolition accessories . . . 4-12
Demolition equipment . . . 4-13

ED_001691B_00007347

Page

CHAPTER 5 FIRING SYSTEMS PROCEDURES
General 5-1
Nonelectric systems 5-1
Safety precautions for nonelectric firing systems 5-1
Assembly of nonelectric system 5-2
Igniting fuse of nonelectric system 5-5
Electric firing systems 5-6
Safety precautions for electric systems 5-6
Preliminary electrical continuity testing 5-7
Connecting/splicing electric wires 5-9
Priming and testing firing circuit 5-10
Blasting machine 5-12
Use of detonating cord 5-13
Safety precautions for detonating cord 5-13
Detonating cord connections 5-13
Capping detonating cord 5-15
Priming the charge 5-15
Dual firing systems 5-15
Dual nonelectric firing system 5-17
Dual electric firing system 5-17
Combination dual firing system 5-17
Dual electric priming system 5-18
Ignition trains 5-18
Preparation of ignition trains 5-18
Misfires 5-22
Prevention of nonelectric misfires 5-22
Handling nonelectric misfires 5-22
Prevention of electric misfires 5-23
Handling of electric misfires 5-23

CHAPTER 6 EXISTING DEMILITARIZATION EQUIPMENT AND METHODS
General 6-1
Munitions disassembly lines 6-1
APE disassembly equipment 6-1
Washout of explosive fillers 6-2
High pressure washout and reclamation system 6-6
Steamout of explosive fillers 6-6
APE 1236 deactivation furnace 6-7
Open burning grounds 6-9
Open detonation grounds 6-12
Chemical munition demilitarization methods 6-12

CHAPTER 7 DEMILITARIZATION/DISPOSAL TRAINING
General 7-1
On-site training 7-1
Off-site training 7-1
Depot maintenance work requirement (DMWR) 7-2

CHAPTER 8 DISPOSAL METHODS
General 8-1
Burning on the surface 8-1
Burning in pits or trenches 8-2

ED_001691B_00007347

Page

CHAPTER 8 DISPOSAL METHODS - Continued
Burning in deactivation furnaces 8-2
Detonation 8-2
Certification of inert scrap materials 8-3

CHAPTER 9 EXISTING DEMILITARIZATION FACILITIES AND CAPABILITIES
DESCOM and AMCCOM facility locations 9-1
DESCOM depot facilities and capabilities 9-1
AMCCOM installation facilities and capabilities 9-1
Western demilitarization facility, Hawthorne, Nevada 9-15

CHAPTER 10. NEW TECHNOLOGY
General 10-1
Environmental regulations 10-1
Environmental regulation compliance 10-2
Reclamation and reutilization of resources 10-3
Existing equipment and processes 10-3
Fluidized bed incinerators 10-3
Design for demilitarization 10-3

CHAPTER 11 DEMILITARIZATION ACCOUNT
Forecasting and budgeting 11-1
Installation workloading and funding 11-1
Accounting and reporting 11-3
Generations 11-3

APPENDIX A REFERENCES A-1

APPENDIX B EXPLANATION OF TERMS B-1

APPENDIX C SINGLE MANAGER ASSIGNMENT FOR CONVENTIONAL AMMUNITION
(Department of Defense Directive No. 5160.65) C-1

LIST OF ILLUSTRATIONS

Number	Title	Page
4-1	M5A1 demolition charge	4-1
4-2	M112 demolition charge	4-4
4-3	M183 demolition charge assembly	4-5
4-4	M37 demolition charge assembly	4-6
4-5	Heavy HEAT mine M15 with M603 antitank mine fuzes installed cross section	4-7
4-6	M2 block demolition charge, tetrytol	4-8
4-7	Electric blasting cap	4-9
4-8	Military nonelectric blasting cap	4-10
4-9	Safety fuse	4-11
4-10	M700 time fuse	4-11
4-11	Detonating cord	4-11
4-12	M2 weatherproof fuse igniter	4-12
4-13	M60 weatherproof fuse igniter	4-13

ED_001691B_00007347

LIST OF ILLUSTRATIONS - Continued

Number	Title	Page
4-14	M1 flash-vented electric squib	4-13
4-15	M1A4 priming adapter	4-14
4-16	M1 detonating cord clip	4-14
4-17	Detonating cord connector	4-14
4-18	Blasting galvanometer	4-15
4-19	M51 blasting cap test set	4-15
4-20	Actuating blasting machines	4-16
5-1	Nonelectric firing system	5-1
5-2	Holding, cutting, and capping time blasting fuse and detonating cord	5-2
5-3	Lighting time blasting fuse with match	5-3
5-4	Proper position for crimping blasting cap	5-4
5-5	Deleted	
5-6	M1A4 priming adapter with nonelectric and time blasting fuse or detonating cord	5-5
5-7	Electric firing system	5-6
5-8	Testing the galvanometer	5-8
5-9	Wire splicing	5-9
5-10	Splicing two pairs of wires	5-10
5-11	Common series circuit	5-10
5-12	Priming adapter	5-11
5-13	Two half hitches	5-11
5-14	Testing firing circuit	5-12
5-15	Connections using M1 detonating cord clip	5-13
5-16	Square knot connections	5-14
5-17	Girth hitch with one extra turn	5-14
5-18	Ring main with branch lines	5-14
5-19	Detonating cord connector	5-16
5-20	Electrical tape splicing	5-17
5-21	Detonating cord priming methods	5-18
5-22	Nonelectric dual firing system for a single charge	5-18
5-23	Dual nonelectric firing system with dual detonating cord priming	5-19
5-24	Dual electric firing system	5-20
5-25	Combination dual firing system	5-20
5-26	Dual electric priming system	5-21
5-27	Plastic bag of smokeless powder	5-21
6-1	Washout room (APE 1300)	6-3
6-2	APE 1300 explosive washout plant - schematic diagram	6-4
6-3	APE 1300 explosive washout plant - water reclamation system	6-5
6-4	APE 1236 deactivation furnace (general assembly)	6-8
6-5	APE 1236 deactivation furnace (discharge assembly)	6-9
6-6	Furnace deactivation	6-10
6-7	Kit E010 air pollution control system	6-11
9-1	Ammunition storage locations	9-2
9-2	Site plan for Western Demilitarization Facility showing locations of all principal buildings, roads, and rail lines	9-19

ED_001691B_00007347

LIST OF TABLES

Number	Title	Page
2-1	Weather and Time Factors for Disposal of Chemical Munitions	2-4
4-1	Leading Characteristics, Explosive Charges, and Initiating Devices	4-1
4-2	Disposal Accessories and Equipment	4-3
9-1	DESCOM and AMCCOM Capabilities Summary	9-3
9-2	Conventional Ammunition Demilitarization Facilities and Capabilities (AMCCOM)	9-5
9-3	Conventional Ammunition Demilitarization Facilities and Capabilities (DESCOM)	9-16
9-4	Army OCONUS Capabilities Summary	9-18.1

ED_001691B_00007347

CHAPTER 1

INTRODUCTION

1-1. PURPOSE AND SCOPE

a. This user manual provides ready references to sources of information, regulations, and technical experts for the purpose of ensuring that demilitarization/disposal activities utilize and implement the latest guidance and technical knowledge. The contents are intended to supplement existing information, regulations, and instructions directed specifically at demilitarization/disposal operations. Requirements and procedures in DMWR's on specific ammunition items will take precedence when in conflict with those stated in this manual.

b. The information, guidance, and references pertain to excess, unserviceable or obsolete conventional munitions and explosives. Chemical Group A Agents and certain Chemical Group B Agents, including blood agents CG and BZ, are excluded from the provisions of this manual.

c. The requirements of this manual apply to Military Installations or Facilities, and Joint Military Civilian Activities which are responsible for the demilitarization/disposal of Conventional Ammunition. They will be followed except where the provisions of the host country are applicable.

d. Warnings, cautions, and notes which appear in this manual are defined as follows:

WARNING

AN OPERATING PROCEDURE, PRACTICE, ETC., WHICH IF NOT CORRECTLY FOLLOWED, COULD RESULT IN INJURY TO PERSONNEL OR LOSS OF LIFE.

CAUTION

AN OPERATING PROCEDURE, PRACTICE, ETC., WHICH IF NOT STRICTLY OBSERVED, COULD RESULT IN DAMAGE TO, OR DESTRUCTION OF, EQUIPMENT.

NOTE

An operating procedure, condition, etc., which is essential to highlight.

1-2. FORMS, RECORDS, AND REPORTS

a. General. Responsibility for execution of forms, records, and reports rests upon the commanders of all installations performing demilitarization/ disposal operations. Records, reports, and authorized forms normally indicate the type, quantity, and condition of materiel received, demilitarized, and disposed of.

b. Authorized Forms. The forms generally applicable to units handling subject materiel are listed in appendix A. Refer to TM 38-750 and TM 38-750-1 for instructions on use and completion of these forms. For a current listing of all forms, refer to DA Pam 310-1

c. Field Report of Accidents. Accidents involving injury to personnel or damage to materiel will be reported on DA Form 285, in accordance with AR 385-40.

d. Report of Damaged or Improper Shipment. All shipments of munitions received in damaged or otherwise unsatisfactory condition, because of deficiencies in preservation, packaging, marking, loading, storage, or handling will be reported on SF 364 in accordance with AR 735-11-2. Reports of damaged or improper shipment due to transportation discrepancies are to be reported on SF 361 in accordance with AR 55-38.

e. Fires. A fire report will be prepared on all fires, or explosions followed by fires, which result in injury, loss of life, or property damage (repair or replacement cost of $100 or more) at all DA installations. Property includes Army equipment, materials, structures, plants, systems, timber or grassland, or other property. Motor vehicles or aircraft damaged while in use are excepted from this report. For further information, refer to AR 420-90. Reports of fire, or explosion followed by fire, involving ammunition or explosives are made in addition to the reports specified in AR 38540.

ED_001691B_00007347

1-3. WAIVER ACTIONS

a. General. The mandatory requirements and advisory provisions set forth in this manual apply to each command, unit, activity, and facility where commanders are charged with the responsibility for safety and are implemented by DARCOM-R 385-100 and TM 9-1300-206.

b. Mandatory Requirements. Mandatory requirements are those in which the terms "shall", "will", or "must" are used. The advisory provisions include the terms "should" or "may".

c. Waivers. Waiver actions regarding deviation from mandatory standards of this manual other than ammunition and explosive quantity-distance standards shall be submitted through channels to the appropriate major CONUS or overseas commander for review and approval. All approved waivers shall be granted for definite periods not exceeding one year and shall be reviewed annually by the submitting installation or activity to determine whether current conditions warrant continuation or modification of the wavier. Waiver renewal requests must be submitted when extensions are necessary. The only exception to the above is for ammunition and explosives quantity-distance conditions. Waivers for Q-D shall be treated as follows:

(1) The Chief of Staff, U.S. Army (CSA) is the controlling authority for granting waivers of Q-D safety standards for ammunition and explosives. This authority is redelegated by this regulation to:

(a) Commanders of major Army commands-(MACOMS) in CONUS.

(b) Overseas theater commanders.

(c) The Chief, National Guard Bureau (CNGB).

(2) This authority will not be redelegated further.

(3) Commanders to whom waiver authority is delegated (per (a) above) will:

(a) Ensure the existence of necessary and-compelling reasons before granting waivers to Q-D standards.

(b) Grant waivers to Q-D standards for-installations and activities within their areas of authority.

d. Requests for Waivers.

(1) General. Commanders of installations, activities, and other ammunition locations will submit requests for waivers through command channels. This will be done when Q-D standards cannot be achieved. When such waivers impact on other commands, initiating activities will coordinate requests with these local commands. Requests for waivers will include copies for intermediate commands. CONUS commanders will coordinate with other affected MACOM commanders before granting waivers.

(2) Requirements. Requests for waivers will contain the following minimum information:

(a) Description of conditions. This will include maps showing distances to internal and external exposures, location of personnel, facilities exposed, and quantity and type or class of ammunition or explosives.

(b) Safety regulations that will be violated, and reasons.

(c) Specific time period for the waiver.

(d) Safety precautions during the period of waiver.

(e) Development of a waiver plan. This will include milestones, resources, and actions planned to eliminate the need for the waiver.

(3) Submission. Requests for waivers will be forwarded as shown below.

(a) Within CONUS, through command channels to the CONUS MACOM commanders.

(b) Within overseas commands, through command channels to MACOM and theater headquarters.

(c) Within ARNG to CNGB.

e. Time Limitations.

(1) Waivers normally will be limited to 1 year or less; no waivers will be in effect for more than 5 years. A waiver will be considered as rescinded on its expiration date. Installation or activity commanders will forward waiver renewal requests in time to permit investigation, evaluation, and reply. Waivers will not be renewed unless all practicable means for corrections have been exhausted.

(2) Waivers granted for more than 1 year will be reviewed each year by the installation or activity commander. This will ensure that circumstances requiring the waiver have not changed. Results of this review (and a progress report regarding milestones that have been completed) will be forwarded through command channels to the MACOM commander granting the waiver.

(3) Request for amendments will be initiated when:

(a) Factors or circumstances provide a basis for a change to the initial requests for waiver.

(b) New conditions arise to affect an existing waiver.

(4) When factors of circumstances prevent a waiver condition from being corrected within 5 years of an original request (submitted after the effective date of this regulation), the waiver becomes a candidate for exemption. The installation commander will review exemptions each year and assure that a record of this review be maintained locally.

f. Exemptions.

(1) Exemptions are relatively long-term exceptions to otherwise mandatory standards. They will be granted only under the following conditions:

(a) When immediate corrective measures are impractical.

(b) Where impairment of the overall defense posture would result.

(c) When positive programs for eventual .limitation of the exemption's need are being pursued.

(2) Exemptions can be authorized only by the Secretary or Under Secretary of the Army, or higher authority.

(3) Requests for exemptions will be sent to HQDA(DAPE-HRS), WASH DC 20310.

(4) Exemption requests must include detailed information on the hazards involved in the operation. A hazard analysis must describe expected casualties and property losses on a worst-case basis.

g. DOD Explosives Safety Board. Recommendations of the 'DOD' Explosives Safety Board (DODESB) will be considered by HQDA(DAPE-HRS). This will help resolve requests for waivers or exemptions, or controversial decisions. (See AR 38560.)

h. Disagreements. Requests for waivers or exemptions within CONUS that cannot be resolved between MACOM commanders will be referred to HQDA(DAPE-HRS), WASH DC 20310, for resolution.

i. Records. Copies of waivers and exemptions will be maintained in the safety offices of installations and MACOMs .

j. Clarification. Requests for clarification of provisions of this regulation will be submitted to HQDA (DAPE-HRS), WASH DC 20310.

1-4. HAZARD CLASSIFICATION

The U.S. Army DARCOM is responsible for assigning proper hazard classification (TB 700-2) DOD storage compatibility groups, Department of Transportation (DOT) class, and DOT markings for ammunition and explosives adopted for use by the Army. Information desired for existing munitions and required data regarding newly developed systems shall be addressed to Director, DARCOM Field Safety Activity, ATTN: DRXOS-ES, Charleston, IN 47111.

ED_001691B_00007347

CHAPTER 2

SAFETY AND ACCIDENT PREVENTION

2-1. INTRODUCTION

a. All personnel engaged in operations in which munitions or other hazardous material are involved shall be thoroughly trained in explosive safety, and be capable of recognizing hazardous explosive exposures. Safety must become a firmly established habit when working with or in the vicinity of items having explosive, flammable, or toxic hazards.

b. The safety requirements in TM 9-1300-206 (Ammunition and Explosives Standards) for other than DARCOM installations and DARCOM-R 385-100 (Safety Manual) for DARCOM installations will be followed. These requirements have been formulated to assure safety in activities involving ammunition and explosives.

c. Improper, rough, and careless handling of munitions may result not only in malfunctioning but may cause accidents which result in loss of life, injury, or property damage. The history of accidents which have occurred in the use, handling, shipping and storing of munitions shows that in most instances, where the cause was determined, the accidents have been due to human error and circumstances which were avoidable.

d. Munitions will be handled under the direct supervision of competent personnel who thoroughly understand the hazards and risks involved.

e. Operations will always be based upon minimum possible exposures consistent with efficient operations.

f. The absence of a safety requirement in this manual does not necessarily indicate that no safeguards are needed. If hazardous conditions present immediate danger to life and property, operations will not be continued until the hazard has been corrected or eliminated.

2-2. GENERAL REQUIREMENTS

NOTE

Limitations and restrictions as to the means and the items that can be demilitarized/disposed of vary from location to location. These limitations and restrictions must be checked prior to demilitarization.

a. The following agencies, as a minimum, will be notified prior to starting demilitarization/disposal operations:

(1) Medical Facility.

(2) Security Police.

(3) Fire Department.

(4) Base Operations.

(5) EOD/Safety Office (When available on base.)

b. At minimum safe distances stated in DA-COM-R 385-100/TM 9-1300-206, personnel in the open may be exposed to some fragments and debris. Therefore, action should be taken to reduce hazards by:

(1) Confinement to the greatest extent possible.

(2) Use of barricades.

(3) Evacuation of personnel not essential to the demilitarization/disposal operation.

(4) Use of overhead and frontal cover for personnel.

(5) Personnel engaged in demilitarization/disposal work shall be given ample time to reach a safe distance

ED_001691B_00007347

prior to detonation. The signal for detonation shall be given by the supervisor after all personnel are protected by cover or have reached a safe distance. Safe distances will be observed by all personnel.

(6) If a hazardous situation is encountered, all operations in the immediate vicinity will be shut down, and personnel evacuated to a safe location. Operations will not be resumed until the hazard has been eliminated. Prompt action will be taken to control any hazard.

(7) The demilitarization/ disposal of munitions by burning or detonation involves the release of toxic fumes. A covered pit may limit the range of fragments but the control of fumes is dependent upon a number of factors, each of which must be carefully assessed for the particular material being destroyed at the time and place the operation is conducted.

(8) No demilitarization/ disposal operation will be conducted during an electrical storm or when such a storm is approaching within 5 kilometers (3 miles). Additionally, disposal by detonation using an electrical firing system will not be conducted during sand, dust, or snow storms.

(9) Demilitarization/disposal by open burning will not be conducted when wind velocity exceeds 15 miles per hour.

2-3. SAFETY AT DEMILITARIZATION/DISPOSAL AREAS

a. TM 9-1300-206 provides information concerning hazards to personnel and damage to facilities that may be expected at given distances. These distances do not provide protection to personnel in the open from fragments and debris.

b. The minimum required signs or warning devices at the entrances and around the perimeter of the demilitarization/disposal are as follows:

(1) Red range flag to be flown or a rotating red beacon light be in operation during demilitarization/ disposal operations and removed only after the range has been declared safe. The flag will be a minimum of 0.9 2-2 meters (three feet) wide by 1.5 meters (five feet) long.

(2) Danger signs with the legend EXPLOSIVE DISPOSAL RANGE-KEEP OUT imprinted on them, will be posted at the entrances and at 152 meters (500-foot intervals) around the perimeter of the range. The signs will be multilingual when necessary and of sufficient size to incorporate the legend in 5 centimeters (two-inch) red letters on the white background.

(3) Guards, safety signal, and warning signals will be used as required to keep unauthorized personnel from danger areas during destruction operations.

c. In areas where demilitarization/disposal ranges are not under constant control of U.S. Armed Forces, the following safety requirements will be strictly adhered to:

(1) Prior to starting demilitarization/disposal operations, the disposal range will be searched for unauthorized personnel.

(2) Guards will be posted to prevent entry into the area prior to and throughout the demilitarization/ disposal operation. Guards will be afforded adequate protection from fragments.

d. A first aid kit, NSN 6545-00-116-1410, or suitable substitute, will be available during disposal operations. An ambulance or first aid vehicle, manned by personnel trained to handle casualties that may occur during demilitarization/ disposal of specific munitions, will be on hand. Type of equipment for specific munitions being demilitarized/disposed of will be coordinated with the Base Medical Facility.

e. A means of communication with both base facilities and demilitarization/ disposal personnel will be established. Communication may be by the most convenient method (radio, telephone, walkie-talkie, etc.), but the equipment used will be in good working order prior to commencing any operation. The applicable safety distances for electromagnetic devices in TM 9-1300-206 will be followed.

f. A pit should be used to limit fragments when demilitarizing by detonation.

The pit will be a minimum of 1.2 meters (four feet) deep and the item to be destroyed covered with 0.6 meters (two feet) or more of earth. Pits are not required when disposal takes place on a bombing range. If pits or similar aids are not used to limit fragments, cautions will be taken to protect personnel and equipment. The use of a pit or barricade or other means of confinement is mandatory where ranges do not have 732 meters (2400 feet) of clearance.

g. Where operations require the use of a personnel shelter, the shelter will be located at the appropriate inhabited building distance for the quantity/type of materials being detonated, but in no case less than 91 meters (300 feet) from the disposal site. The shelter shall afford substantial fragment-proof overhead cover and frontal protection.

h. Tools and equipment to be used during disposal operations will be afforded protection to prevent damage. Safety equipment/clothing will be readily available but must be protected from damage.

i. Fire prevention is an integral part of any munitions disposal operation. At locations where a high fire hazard exists, such factors as weather and local environmental conditions become critical. When the fire department is contacted, the local fire hazard potential will be evaluated and a determination made as to additional protective measures necessary to ensure effective fire prevention. If adequate fire preventive/protective measures cannot be taken, demilitarization/disposal operations will not be conducted.

j. Firefighting equipment will be present at the scene to combat grass, brush, or equipment fires. Type of equipment and any additional protective measures necessary in high fire risk areas/periods will be coordinated with the Base Fire Marshall.

k. All disposal operations will be conducted in accordance with approved SOP's, DMWR's, and this manual.

l. Disposal actions will be completed in the safest most expeditious, and cost effective manner available at a particular disposal site. Items with compatible characteristics and similar disposal methods should be disposed of in a single operation whenever possible. In disposal operations completed by detonation, consideration should be given to utilizing items with a high explosive content to enhance efficiency and cost effectiveness. Mixing of bulk explosives will not be permitted during burning operations.

m. Some munitions are comparatively difficult to explode; therefore, a search of the area will be made after each detonation for any munition that has not been detonated. Use caution when investigating post-firing results. Misfired charges may be present even though the shot appeared to be normal.

n. Inert filled items will not be disposed of or released for sale as scrap metal until internal fillers are exposed and unconfined. Heat generated during a reclamation operation can cause the filler, moisture and air to expand and burst sealed casings. Venting or exposure may be accomplished in any way necessary to preclude rupture due to confined pressure.

2-4. DEMILITARIZATION OF CHEMICAL MUNITIONS

a. Chemical munitions will be destroyed in an open space (preferably on a hilltop) and there should be no woods or heavy brush that might trap the vapors or aerosols generated close to the operation, especially in the downward direction.

b. Factors influencing Disposal of Chemical Munitions: The following factors will be carefully considered when disposing of munitions containing chemical agents. See table 2-1.

(1) Temperature and pressure. Under normal temperature and pressure, chemical agents may exist physically as solids, liquids, or gases. The physical state in which an agent normally exists determines to some extent its tactical use, its effective duration, its physiological action, the type of munition used for its dispersion and the disposal procedure for the chemical agent and the explosive components. The chemical evaporates or becomes a gas more rapidly as the temperature increases. If the temperature can be raised high enough, thermal decomposition may result.

(2) Volatility. There are several factors which influence the period of time a chemical agent will exist at the point of its release. Volatility is important in determining the persistency effect of an agent. Volatility varies directly with temperature. A liquid or solid chemical having high volatility will evaporate or turn into a gaseous state more rapidly than a chemical of low volatility.

(3) Temperature gradient. The temperature gradient also effects the persistency of a chemical agent. Temperature gradient is the difference obtained by subtracting the air temperature 0.5 meter (1.6 feet). above the ground from the air temperature 4 meters (13 feet) above the ground. If the temperature at 4 meters (13 feet) is greater than that at 0.5 meter (1.6 feet), an inversion or stable atmospheric condition exists. Conversely, if the temperature at 4 meters (13 feet) is less than that at 0.'5 meter (1.6 feet), a lapse or unstable atmospheric condition exists. If the difference is 1 degree or less, a neutral condition exists. Chemical agent clouds released under lapse conditions tend to dissipate more rapidly than under neutral or inversion conditions. Obviously, disposal work is best conducted under lapse conditions whenever possible.

(4) Wind speed. Persistency is also affected by wind speed. As wind speed increases, the chemical agent cloud covers the downward hazard area more rapidly; however, the cloud will diffuse sooner and thus travel a shorter total distance. Buildings, vegetation, large bodies of water, contour of the land and other terrain features play an important role in the duration of effectiveness of agent at its point of release and its diffusion downwind. Any obstruction to the movement of air creates turbulence which breaks up the clouds.

(5) Rain and humidity. Rain and humidity vary in their effect on chemical agents. Depending upon the chemical involved, rain can hold the cloud close to the point of release or wash the chemical from the air. Moisture from rain or high humidity will cause some chemicals to break down through hydrolysis.

Table 2-1. Weather and Time Factors for Disposal of Chemical Munitions

Factor	Condition			
	Excellent	Fair	Fair*	Unsatisfactory**
Temperature	75°F and above	55°F - 75°F	Under 55°F	Under 55°F
Sky	Clear	Partly Cloudy	Clear	Cloudy
Wind	4 mph - 15 mph	5 mph - 20 mph	7 mph - 15 mph	Under 3 mph or over 20 mph
Time of Day	1000-1600	1000-1600	1000-1600	

*This column pertains to winter conditions. When the ground is covered with snow, however, the disposal of toxic agents and munitions is not feasible.

**Chemical agents or munitions will not be disposed of under these conditions but only when extreme emergency conditions prevail.

NOTE

Supervisory personnel should become thoroughly familiar with Chapter 3 of this manual and TM 3-240/FIELD BEHAVIOR OF CHEMICAL, BIOLOGICAL, AND RADIOLOGICAL AGENTS. This publication provides a complete discussion of the influence of weather on chemical agents. In general, conditions suitable for the disposal of toxic munitions are directly contrary to those conditions prescribed for their most effective use in combat operations.

Disposal operations should be performed under weather conditions where a lapse condition exists. If the wind speed is 3 mph or less, it is probable that the wind direction will change so frequently as to be unreliable.

2-5. PERSONNEL REQUIREMENTS

a. All operations involving explosives will be analyzed with a view toward reducing the number of personnel that could be subjected to an incident.

b. Personnel limits-A minimum number of personnel will be exposed for a minimum time to the smallest quantity of explosives consistent with safety and efficiency. However, at least one additional person should be available near the hazard area during explosives operations to give warning and assist in rescue activities in the event of an accident. The following will apply in the establishment of personnel limits:

(1) Tasks not necessary to the explosives operation will be prohibited within the immediate vicinity of the hazard.

(2) Unnecessary personnel will be prohibited from visiting the operation.

(3) Where it is essential to perform concurrent operations in a single building, the layout will be planned to separate dissimilar operations to prevent propagation of fire or explosion. Such operations shall be protected by dividing walls, barricades, or other means to minimize personnel exposure.

(4) The maximum number of operators, supervisors, and visitors (casuals) permitted at any one time in the immediate working area, room, cubicle, or building containing explosives will be effectively publicized by conspicuously placed posters or placards.

c. Protection of personnel-In accordance with AR 385-32, suitable personal protective clothing, equipment, and devices will be provided to protect personnel against hazards inherent in specific jobs.

2-6. AMMUNITION AND EXPLOSIVES HANDLING

a. Ammunition and explosives will be handled carefully. Bale hooks will not be used. Nails will not be driven into shipping and storage containers containing ammunition. Containers will not be tumbled, dropped, dragged, thrown, rolled, or walked. However, ammunition packaged in approved containers designed to permit dragging or towing may be so moved. Unfuzed bombs equipped with shipping bands also may be rolled, if care is exercised. When it is necessary to lift palletized munitions or folklifts, the proper use of slings will be employed.

b. Conveyors and forklifts may be used, except where such use could cause initiation or create hazards. Sectionalized roller conveyors used to move ammunition will be substantially supported and the sections interlocked or secured. Boxes of ammunition will not be used to support conveyors.

c. Loose detonators, initiators, squibs, electrically actuated devices, blasting caps, and the like will not be carried in pockets of clothing, in tool kits, etc. Non propagating containers will be used to provide adequate protect ion.

ED_001691B_00007347

d. General information relative to the properties applicable to military explosives will be found in TM 9-1300-214, and may be used as a guide in the formulation of safety standards.

e. Personnel responsibilities. Personnel working with munitions are required to observe the following precautions:

(1) Do not carry fire or spark-producing devices into ammunition and explosives work areas unless authorized in writing.

(2) Do not smoke, except in authorized areas. After smoking, assure that burning tobacco is completely extinguished.

(3) Do not have fires for heating or cooking, except in authorized areas.

(4) Do not allow accumulation of litter, packing material, dunnage, dry leaves, grass or twigs, etc., within fire-break areas.

(5) Pick up any debris within storage area.

(6) Do not accumulate oily rags or other material subject to spontaneous ignition, except in covered metal box. Have such material collected daily and removed from area.

(7) Do not conduct operations without approved Standing Operating Procedures (SOP's) and proper supervision.

(8) Use only permissible lighting in ammunition storage sites.

(9) Do not become careless by reason of familiarity with ammunition.

(10) In case of fire, sound alarm immediately. Be ready to show location of fire to firefighting personnel sent to scene.

(11) Assure that each man knows what to do in case of fire within work area.

(12) The person in charge should instruct all personnel on the existing fire plan to aid firefighting crews and to prevent loss of life and property in case of an accident.

(13) Use only authorized vehicles equipped with spark arrestors to transport munitions and explosives.

f. Explosive limits-Limits for ammunition, explosives, and pyrotechnic materials shall be determined by a careful analysis of all facts, including operation timing, transportation methods, size of the items, and the chemical and physical characteristics of the material. Stricter limits will be used for the more sensitive or hazardous material.

(1) Limits shall be established for each operation, rather than on an overall basis, and included in SOP's and applicable DMWR's so that each worker will be charged with the responsibility of not exceeding the established limit. Limits may be expressed in units of weight, trays, boxes, pallets, or any other unit which may be more easily observed and controlled.

(2) Except for storage buildings, explosives limits shall not be established on the basis of the maximum quantity of explosives permitted by explosives safety separation when smaller quantities will suffice for the operation. The maximum amount of explosives (expressed by weight or units of ammunition items as applicable) permitted in each room, cubicle, or building containing explosives will be conspicuously posted in each such area.

(3) Except for operational necessity, supplies exceeding approximately a 4-hour work requirement should be kept in a service storage building located at intraline distance from operating buildings.

g. Safety hand tools -

(1) Safety hand tools are constructed of wood, nonsparking or spark-resistant materials such as bronze, lead, beryllium alloys, and "K" Monel metal which, under normal conditions of use, will not produce sparks. Properly maintained nonferrous hand tools shall be used for work in locations which contain exposed explosives or hazardous concentrations

of flammable dusts, gases, or vapors. Authorized hand tools or other implements used in the vicinity of hazardous materials must be handled carefully and kept clean.

(2) If the use of ferrous metal hand tools are required because of strength characteristics, the immediate area and equipment shall be free from exposed explosives and other highly combustible materials.

(3) Non-sparking or spark-resistant tools of lead or beryllium alloys that require sharpening or shaping shall be replaced rather than ground down, unless adequate exhaust ventilation is available on the grinder being used for this purpose.

2-7. HOUSEKEEPING

Buildings and magazines within a demilitarization/disposal area will be kept clean and orderly at all times.

a. Waste Materials. Oily rags, combustible and explosive scrap, and paper will be kept separate from each other. Each type of waste should be placed in closed, non-combustible containers properly marked and preferably located outside the buildings.

b. Cleaning. A regular cleaning program will be carried on as frequently as required for maintaining safe operations. Extensive cleaning should not be conducted while an explosives operation is being performed.

c. Sweeping Compounds. Hot water or steam should be used wherever practicable for cleaning floors in buildings containing explosives. Sweeping compounds which are non-abrasive and compatible with the explosives involved may be used where the use of steam or hot water is not practicable. Such compounds may be combustible but will not be volatile (closed cup flash point will be more than 2300F). Sweeping compounds containing wax will not be used on conductive flooring. Where nitrated organic explosives are involved, which may form sensitive explosives compounds with caustic alkalies, use of cleaning agents containing caustic alkalies is prohibited.

d. Explosives Recovery and Reuse. All loose explosives recovered as sweepings from floors of operating buildings will be destroyed.

2-8. SECURITY

a. Fencing, Placarding, and Admittance to demilitarization/Disposal Areas. An explosives area will be placarded at each entrance. Unauthorized persons will not be permitted to enter. Authorized persons must enter and leave ammunition areas at designated points. The placard will require personnel before entering the area to present proper credentials and turn over all prohibited articles to the guard on duty, or to place them in containers provided for that purpose. A demilitarization/disposal area will be separated from administration, residential, and entirely unrelated inert and warehouse areas by fences. Fencing (excluding that installed for security reasons only) should not be placed closer to magazines than magazine distance nor closer to explosives operating buildings than intraline distance (See DARCOM-R 385-100/TM 9-1300-206). Reservation boundaries should be fenced. In certain cases, topography and/or other physical considerations may make fencing impossible or impracticable. Security measures will be in accordance with AR 50-6 and AR 190-11. The boundary of each explosives area will be posted at 160 meters (500-foot intervals) to warn against trespassing.

b. Guard Protection.

(1) Magazines and areas in which there are explosives and ammunition will be guarded adequately at all times. Entrances to these areas will be locked unless protected by guards.

(2) Guards and others in charge of explosives and ammunition will be thoroughly instructed in emergency firefighting procedures and the hazards due to fire and explosions, and the safety precautions to be taken. They will be instructed that their most important duty is to protect explosives and ammunition against fire. Alarms will be given with the greatest possible speed so as to start action instantly. Serious fires and explosions have been avoided by prompt

action of the guards. After giving the alarm, guards will exert every effort to hold the fire under control until the firefighting forces arrive, except that should a fire occur in a closed magazine, they will not attempt to enter the magazine.

(3) Guards will be instructed to make a prompt report of the following:

(a) Any unusual occurrence in or near a magazine area.

(b) Grass or forest fires in areas adjacent to the magazine area.

(c) Dangerous practices of personnel working in magazines or areas in which there are explosives, such as smoking.

(d) Unauthorized use of fire equipment and tampering with ammunition or electrical equipment.

(e) Unlocked magazine doors or shutters, defective telephone and electric wires, or openings in fences surrounding the magazines.

(f) The presence of suspicious personnel.

(4) Generally, shotguns are recommended for guard purposes. Many explosives are not initiated by low velocity projectiles, but any bullet striking explosives may cause a serious fire and/or explosion. Guards protecting explosives or ammunition will be instructed regarding the dangers of firing in the direction of a magazine or ammunition in the open.

2-9. STANDING OPERATING PROCEDURES (SOP's)

a. A written SOP will be prepared and approved prior to conducting operations involving ammunition and explosives. The SOP will include safety requirements, personnel and explosive limits, quality control and quality assurance procedures, description of work to be accomplished, designation of equipment to be used, location, and sequence of operations (See TM 91300-250, and DARCOM-R 385-1.)

(1) Action to be taken in the event of electrical storms, utility or mechanical failures, etc., occurring during the handling or processing of hazardous materials will be set forth in SOP's prepared specifically for such purposes.

(2) When non-English speaking personnel are employed in operations involving explosives, the SOP will be in English and in the language the employee understands.

b. The SOP will be approved by the commander or by a qualified member of his staff whom he has delegated to review and approve procedures. The SOP will also be approved by persons designated as being responsible for performance of an operation. No change to an SOP will be permitted unless approved in writing by the approving authority.

c. All personnel having operational duties of supervision thereof will enforce the SOP requirements for their particular operation and have ready access to the SOP for reference purposes.

d. Applicable portions of the approved SOP shall be conspicuously posted convenient to all stations involved in the operation for the guidance of all personnel.

2-10. PROCEDURE IN EVENT OF ELECTRICAL STORMS

a. Whenever an electrical storm approaches the establishment, personnel shall be evacuated from locations at which there is a hazard from explosives which could be initiated by lightning. Such locations include the following:

(1) Operating buildings or facilities without approved lightning protection systems, which contain explosives or explosive-loaded ammunition, and locations within intraline distance of such facilities.

(2) Buildings containing explosives dust or vapors whether or not equipped with approved lightning protection systems, and locations within intraline distance of such buildings.

ED_001691B_00007347

(3) Magazines, open storage sites, or loading docks not equipped with approved lightning protection systems, and vehicles and railroad cars containing explosives and explosive-loaded ammunition on ungrounded tracks, and locations not providing protection equivalent to unbarricaded intraline distance of such, and within magazine distance of such structures, sites, vehicles, or cars.

(4) Locations (with or without lightning protection) where operations involving electro-explosive devices are being performed.

b. When personnel are to be evacuated from explosives operations, the operations should be shut down, windows and doors closed, and electric switches thrown to the off position.

c. A responsible and qualified person should be empowered with the final decision as to the necessity for evacuation. Where operations are of such nature as to require advance warning of shutdown, volunteer observers or an electronic static detector may be used.

d. In an operating line, evacuated personnel shall be retired to approved, suitable, protective shelters located in intraline distance from operating buildings or other hazardous locations. In a magazine area, evacuated personnel shall be retired to approved shelters or to empty earth covered magazines at intraline distance from class 1.1, and at magazine distance from class 1.2 - 1.4 ammunition. When such shelters are not available, personnel shall be withdrawn to places at inhabited building distances from the hazardous locations.

e. Personnel in direct charge of railroad trains and motor trucks containing explosives should, when possible, move the equipment to a predesignated location, but in no case less than approved magazine distance before retiring to designated bomb-proofs or change houses.

2-11. OPEN STORAGE OF AMMUNITION

a. Open storage is a temporary expedient and should not be used in lieu of standard methods for long-term storage.

b. Earth covered (igloo) storage should be used wherever possible. In comparison with other methods, it provides a higher degree of protection and safety for the ammunition and surrounding targets, greater physical security, and reduced maintenance of the ammunition.

c. Examples of permitted open storage of ammunition would be:

(1) Bombs slated for demilitarization stored in revetted pads between igloos.

(2) Item size or quantity preclude storage in magazines.

(3) Material located in outside storage at time of suspension from issue, movement, and use.

CHAPTER 3
TREATMENT OF CHEMICAL AGENT CASUALTIES

3-1. GENERAL

This chapter covers chemical agents discussed in this manual, Description, required safety equipment, symptoms, and self-aid are listed for each agent, Decontamination procedures are detailed in TM 3-220. Treatment of casualties are detailed in TM 8-285, TM 3-250, and FM 21-11. Also see TM 9-1300-206 and DARCOM-R 385-100.

a. Purposes of Storing. For purposes of storing and handling, chemical agents are divided into groups based on the action of the agent, the degree and type of hazard, and the type of protection required.

(1) Chemical Group A: Includes the highly toxic liquid agents. Group A agents are not covered in this manual,

(2) Chemical Group B: Includes chemical agents (gaseous, liquids, or solids) which are toxic or incapacitating by inhalation, ingestion or absorption through the skin, Wearing of a suitable protective mask is required for the protection of personnel against inhalation of vapors, particles, or smoke from burning agents, Since these agents will cause varying degrees of skin irritation, approved protective clothing (such as coveralls, protective masks, gloves, etc.) shall be provided and worn. The group consists of choking agents, blood agents (not treated in this manual), riot control agents, and screening smokes.

(3) Chemical Group C: Includes materials which are spontaneously combustible (WP and PWP) and for which special firefighting techniques and materials are required. Personnel protection will be of the type that will provide protection against fire and heat. Toxic fumes are normally a minimal hazard.

(4) Chemical Group D: Includes signaling smokes and incendiaries (as TH, IM, NP, PTI) which are not covered in this manual.

b. Special Protective Equipment for Chemical Group B Munitions. The special protective equipment identified below must be readily available to personnel working in demilitarization/ disposal facilities.

(1) Personal protective equipment, Personal protective equipment consisting of protective masks, coveralls, and protective gloves, sufficient in number to equip all personnel required to work with Chemical Group B munitions, shall be centrally stored and maintained under close supervision, Personnel shall be issued only service protective masks, coveralls, and protective gloves. However, in addition, personnel handling liquid acid-type chemical agents shall be issued and wear rubber boots, aprons, and gloves.

(2) First aid equipment, The following first aid equipment shall be stored in locations convenient to the operations and shall be issued to the person in charge of personnel required to work with Chemical Group B munitions:

(a) Gas casualty first aid kit; amyl nitrite ampoules; and individual first aid kits.

(b) Stretchers or litters.

(c) Woolen blankets,

(d) A bottle containing a mixture of 4 ounces of pure grain alcohol (95%) and 4 ounces of chloroform to which has been added a few drops of ammonia,

(e) A bottle of alcoholic sodium bicarbonate solution made by dissolving 3-1/2 ounces of sodium bicarbonate in a pint of water, and then adding a pint of alcohol. This solution is used to treat skin rash resulting from tear agent burns,

(f) Saline water solution for irrigating eyes

(g) Sodium sulfite, 1/4 percent water solution for irrigating eyes.

(h) Bicarbonate of soda solution for nose and throat irrigation.

(i) Soap,

(j) Bleach solution.

(k) Borated talcum powder

(l) Aspirin,

(3) Decontaminating material. Sodium hydroxide (caustic soda) decontaminating chemical shall be stored in an area, convenient to the operations, in sufficient quantity to cope with the spill or accident potential involved. Appropriate decontaminating equipment and a source of water shall be immediately available for mixing the solution and responding to an accident.

c. Special Protective Equipment for Chemical Group C Munitions, The special equipment. as indicated below, must be readily available to personnel working where Chemical Group C munitions are stored and handled,

WARNING

COPPER SULFATE IS NOT AUTHORIZED FOR USE EXCEPT BY DIRECTION OF A MEDICAL OFFICER BECAUSE OF POSSIBLE COPPER POISONING. WHERE THERE IS A CREDIBLE RISK OF EXPOSURE TO WP, THE COPPER SULFATE TECHNIQUE FOR TREATMENT OF WP BURNS MAY BE USED AT THE OPTION OF THE LOCAL. MEDICAL OFFICER IF A TRAINING AND CERTIFICATION PROGRAM IS ESTABLISHED FOR DESIGNATED FIRST AID PERSONNEL.

(1) Personal protective equipment. Personal protective equipment-" consisting of flameproof gloves and coveralls, and chemical safety goggles, sufficient in number to equip all personnel required to work with Chemical Group C munitions, shall be stored in locations convenient to the operations. These items shall be issued to personnel working with WP and PWP filled items and shall be worn whenever leakers develop or an accident occurs. Regular work clothes, shoes, and gloves should be flame resistant.

(2) First aid equipment. The following first aid equipment shall be stored in an area convenient to the operations and shall be issued to the individual in charge of personnel required to work with Chemical Group C munitions.

(a) Sterile gauze pads sufficient for each worker.

(b) A 5-gallon pail, or other vessel, and two sponges.

(c) A 1-gallon bottle of 1 percent copper sulfate solution and gauze sponges.

(d) Two 1-gallon containers of saline solution.

(3) First aid station. There should be installed in a heated building, convenient to the work area, a bathtub or similar container and a means of heating water.

(4) Firefighting equipment. Water-filled tubs, barrels, or tanks, large enough to contain the WP-filled items, should be located adjacent to the work area.

(5) Emergency permanent eye washes and showers are required in the buildings where phosphorous munitions are handled.

3-2. CHEMICAL GROUP B MUNITIONS

a. Lacrimators (Tear Agents).

(1) CA (brombenzylcyanide), also know as BBC is usually a liquid. (B.P. 468°F, 242°C). It solidifies at 77°F (25°C). The odor is reminiscent of sour fruit.

(2) CN (Chloroacetophenone) is a white crystalline solid (M.P. 129°F, 54°C). The odor of CN is reminiscent of apple blossoms. A CN cloud is bluish white at time of release.

(3) CNS is CN solution in chloropicrin and chloroform. CNB is a solution of CN in benzene and carbon tetrachloride (10: 45: 45 respectively).

(4) CS (o-chlorobenzalmalononitrile) is a white crystalline solid and is stable under ordinary storage conditions. CS melts at 194oF (900C); it may also be used in liquid form in an appropriate solvent. CS has a pungent pepper-like odor and the cloud is white at time of release. CS is faster acting, more potent and less toxic than CN; its effectiveness is approximately ten times that of CN. CS1 is a micropulverized powder. CS2 is modified CS1 treated with liquid silicone, resulting in increased fluidity and persistence.

(5) Symptoms following exposure are as follows:

(a) CA and CN (or CNS/ CNB). The vapors and smokes of these agents cause basically the same reaction as does CS. However, their toxicity is generally higher and their effectiveness as tear agents is generally lower than CS. Thus, higher concentrations of CN and CA are required to produce an equivalent effect to that of CS. Recovery is quick if exposure is brief, but in prolonged exposures mild inflammation of the eyes and some light-intolerance may occur. Do not rub the eyes. There may also be a moderate sense of irritation in the nose and a stinging sensation of the skin, particularly in hot weather. Droplets of liquid or particles of solid in the eyes are corrosive and produce burns resembling those of strong acids. The liquid on the skin or clothing may cause superficial skin burns near body folds, especially in hot weather, and sometimes may cause vomiting.

(b) CS. CS may cause irritation and stinging of the skin, especially the face, neck, ears, and body folds. Stinging may occur even at moderately low contamination. Higher concentration may cause dermatitis and, rarely, blisters on some body areas. The stinging normally subsides after 6 to 10 minutes, even with continued exposure. An increase in stinging may be noted when the individual is removed to fresh air. Even if this occurs, permanent damage is unlikely.

(6) Self aid. Put on the protective mask, clear it, and keep the eyes open as much as possible. When vision clears, carry on with duties. When it is safe to do so, remove the mask and blot away the tears, but do not rub the eyes. If liquid or solid agent has entered the eye (not usually the case), try forcibly to hold the eye open and flush with water from the canteen or eye-wash station. The chest symptoms after exposure to CS can be relieved merely by talking. Persons with eye or skin burns should report for medical treatment as soon as possible.

b. Sternutators (Vomiting Agents).

(1) DA (diphenylchloroarsine) is a crystalline solid. When concentrated, DA smoke is white; it is colorless when diluted with air. It is dispersed as a fine particulate smoke by heat.

(2) DC (diphemylcyanoarsine) is a crystalline solid. When concentrated, DC smoke is white; it is colorless when diluted with air. It is dispersed as a fine particulate smoke by heat.

(3) DM (diphenylaminochlorarsine) is also known as Adamsite; it is a crystalline solid. This is the most commonly used vomiting agent. It is dispersed by heat, in a fine particulate smoke which is canary yellow when concentrated. It is colorless when diluted with air.

(4) Symptoms: Low concentrations of these agents are effective and may not be detectable at the time of exposure. Vomiting agents produce a feeling of pain and a sense of fulness in the nose and sinuses, accompanied by a severe headache, intense burning in the throat, tightness and pain in the chest, and irritation of the eyes. Coughing is uncontrollable; sneezing is violent and persistent. Nasal secretion is greatly increased and quantities of ropy saliva flow from the mouth. Nausea and vomiting are prominent. Mental depression may occur during the progression of symptoms. Mild symptoms, caused by exposure to very low concentrations, resemble those of a severe cold. The onset of symptoms may be delayed for several minutes after initial exposure, especially

with DM, and effective exposure may occur before the presence of the smoke is suspected. If the mask is put on after this minimal exposure, symptoms will increase for several minutes in spite of adequate protection. As consequence, the victim may believe his mask is ineffective and may remove it, thus causing himself to be further exposed.

(5) Self-aid: Put on the mask and wear it in spite of coughing, sneezing, salivation, and nausea. Lift the mask from the face briefly if necessary to permit vomiting or to drain saliva from the facepiece. Carry on duties as vigorously as possible; this will help to lessen and shorten the symptoms. Medical treatment is seldom necessary since recovery is usually prompt.

c. Screening Smokes.

(1) FM. FM (Titanium tetrachloride) is a corrosive, heavy, colorless liquid which decomposes on contact with moist air, yielding a dense white smoke. It is so unpleasant to breathe that dangerous exposure is unlikely.

(2) FS. FS (Sulfur trioxide-Chlorsulfonic acid solution) is a heavy, strongly acid liquid which, when dispersed in air, absorbs moisture to form a dense, white fog consisting of small droplets of hydrochloric and sulfuric acids.

(3) HC. HC (Mixture of grained aluminum, zinc oxide, and hexachloroethane). On burning the HC mixture, zinc oxide is produced, which rapidly absorbs moisture from the air to form a grayish white smoke. The more humid the air, the more dense the smoke.

(4) Symptoms.

(a) FM smoke irritates the nose and throat, but dangerous exposure is unusual. Spray droplets can be injurious to the eyes but seldom cause corneal injury. Liquid splashes can cause acid burns of the skin and severe eye injury including corneal erosion.

(b) FS smoke exposure can cause inflammation of the eyes, respiratory tract, and skin. The symptoms are usually limited to a prickling sensation of the skin, but exposure to heavy concentrations or long exposures to ordinary field concentrations, may result in severe irritation of the eyes, skin, and respiratory tract. Mild cough and soreness in the chest and moderate irritation of the exposed skin are occasionally seen. Splashes of liquid in the eye are extremely painful and cause mineral acid burns with corneal erosions. Liquid FS on the skin may cause painful acid burns.

(c) HC smoke in high concentrations produces an immediate sense of suffocation and irritation of the nose and throat, coughing, and choking. Prolonged exposure to low concentrations causes an elevation of temperature.

(5) Self-aid.

(a) FM. Wear the mask in all concentrations of FM smoke. Wash any liquid splash off the skin with water. If spray or liquid splash has entered the eye, forcibly open the eye and flush with water from the canteen or eye-wash station. Report for medical attention when the situation permits.

(b) FS. Wear the mask in all concentrations of FS smoke. If the skin is splashed with liquid FS, wash off at once with water. If liquid FS gets into the eye, forcibly hold the eye open and flush with water from the canteen or eye-wash station, and report for medical treatment as soon as the situation permits.

3-3. CHEMICAL GROUP C MUNITIONS

a. Chemical Group C. This group consists of WP and PWP for all practical purposes, They are both screening smokes and incendiaries. They are very brittle and the exploding of the munition in which they are used causes them to be broken into small particles which burn very rapidly.

(1) WP (White phosphorous) is a pale yellow, waxy solid which inflames spontaneously on contact with air to give a hot, dense, white smoke.

(2) PWP (Plasticized white phosphorous) is a pale yellow, putty-like solid which inflames spontaneously on contact with air to give a hot, dense, white smoke.

b. Symptoms. WP and PWP smoke in field concentrations is harmless although

it may cause some temporary irritation of the eyes, nose, and throat. Vapors of WP and PWP (no vapors in smoke) are very poisonous and can produce bone decay. Burning particles of WP and PWP can produce extensive burns which heal very slowly. Imbedded particles may cause systemic phosphorous poisoning.

c. Self-Aid.

(1) If burning particles strike and stick to clothing, take off the contaminated clothing quickly before the phosphorous burns through to the skin.

(2) If burning particles strike the skin, smother the flame with water, wet cloth or wet sand. Keep the phosphorous covered with wet material to exclude air until the particles can be removed. WP and PWP continues to burn unless deprived of oxygen.

(3) Try to remove the particles with a knife, stick, or other available object. It may be possible to remove some particles with a wet cloth.

(4) If the eyes become contaminated, flush the eyes immediately with water. Tilt the head to one side, pull the eyelids apart with the fingers and pour water slowly into the eye so that it will run off the side of the face to avoid the spreading of the contamination.

(5) Report to the medical services as soon as possible.

3-4. FIRST AID

a. Self-aid comprises those aid measures which the individual can apply in helping himself and is described in paragraphs 3-2 and 3-3. First Aid comprises the emergency actions undertaken by nonmedical personnel to restore or to maintain vital body functions in a casualty.

b. Whenever a casualty in a chemically contaminated area is unable to put on his protective mask, that must be done for him immediately by the nearest person able to do so, to prevent further exposure.

c. Every individual is responsible for his own personal decontamination if he is physically able to perform it. If he is incapacitated, decontamination must be done for him as soon as possible by any person present who can be spared from emergency duties long enough to do so.

d. It is important that all personnel be trained to administer artificial respiration effectively. The mouth-to-mouth method and its variations as well as the back pressure-arm lift method (Holger-Nielsen method) are recommended.

e. First aid procedures for the following chemical groups are:

(1) CA and CN (including CNS/ CNB). The contaminated person should be removed to fresh air and faced toward the wind with eyes open. If some contaminant remains in the eye (rarely) it should be flushed out promptly with water or saline solution. If available, a 1/4 percent solution of sodium sulfite will be more effective in dissolving and neutralizing the agent. The eyes must not be rubbed or bandaged. Dermatitis and superficial skin burns may be treated with Calomine lotion for symptomatic relief. The treatment of deeper burns is the same as for thermal burns of like severity (TM 8-285).

(2) CS (CS1 and CS2). Treatment is similar to that for CN. Eyes must be thoroughly irrigated with water or saline solution or, preferably, a 1/4 percent solution of sodium sulfite, and the casualty must be sent for medical treatment of the eyes.

(3) DM, DA, and DC. -Remove the casualty to fresh air and away from heat. Have him rinse his nose and throat with salt water or bicarbonate of soda solution. Wash the exposed skin and scalp with soap and water and allow it to dry on the skin; dust the skin with borated talcum. Let the casualty sniff chlorine vapor from bleach solution; if the person's reactions are severe, let him carefully breath chloroform vapors until the symptoms or irritation subside. Chloroform is not to be used to the point of inducing anesthesia, since

ED_001691B_00007347

chloroform, itself, is toxic. Aspirin may be given to relieve headache and general discomfort.

(4) FS. For liquid on the skin, wash with a large amount of water, then with sodium bicarbonate aqueous solution. The skin burns are treated as for thermal burns of like severity. For liquid in the eyes, wash with water or aqueous saline solution, and report for medical treatment as soon as possible.

(5) FM. Treatment is the same as for FS.

(6) HC. There is no physiological reaction from solid HC. However, irritation of the nose and throat should be treated by irrigating with water or aqueous saline solution. Aspirin should be given to ease general discomfort. The person should be removed to fresh air as soon as possible.

(7) WP and PWP. For WP particles burning flesh, immediately plunge portions of the body burned by WP particles under water; this stops WP from burning. If the local medical officer and/or certified First Aid personnel are available, apply a 1percent solution of copper sulfate to the particles imbedded in the skin; this will produce an airproof, black coating over the particles. The phosphorous particles (copper plated and black colored) should be removed by washing or with forceps, and the injury should be treated as an ordinary burn. If no copper sulfate is available, keep the burning part of the body under water, or apply wet compresses until medical help arrives. Oily based salves must not be used to treat WP burns because WP is soluble in oil and may cause systemic poisoning. A 1-percent copper sulfate solution may also be used in the eyes if WP particles are not removed by irrigation; if authorized by local medical officer. If no local medical officer and/or certified First Aid personnel are available, water and saline solution are authorized for use.

CHAPTER 4

DESCRIPTION OF DEMOLITION MATERIALS

4-1. GENERAL

a. In this manual, the term demolition materials means those explosive charges and incendiaries, together with necessary accessories, that are deliberately placed for the express purpose of disposing of (demilitarizing) unserviceable or excess serviceable munitions. Such materials include explosive charges, explosive initiating devices designed for use with such charges, explosive and non-explosive mechanical devices, and apparatus such as instruments, tools, and equipment used with charges for performing various disposal functions.

b. This chapter contains descriptions of demolition materials specified for demilitarization/disposal use in this manual. Table 4-1 summarizes the characteristics of the explosive charges and initiators. Accessories and tools are listed in Table 4-2.

4-2. DEMOLITION EXPLOSIVE CHARGES

a. Demolition explosive charges used in detonation demilitarization procedures are described in detail in FM 5-25, TM 91375-213-12, and as follows:

(1) Charge, demolition, block, M5A1 (fig. 4-1). This is a 2-1/2 pound charge of composition C-4 encased in a clear plastic container with a threaded cap well in each end. Bulk explosive may be obtained by cutting open the plastic container. It is used where a high brisance, powerful plastic explosive capable of being shaped is required. Composition C-4 is moldable between -70°F and +170°F.

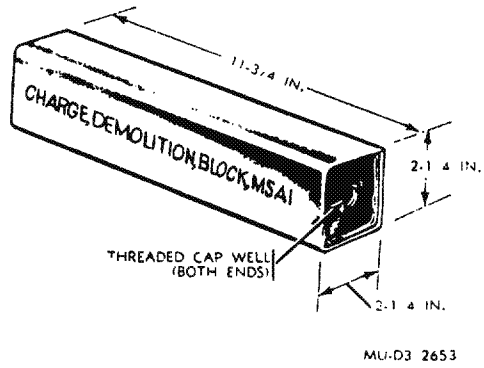

Figure 4-1. M5A1 demolition charge.

(2) Charge, demolition, block, M112 (fig. 4-2). This is a 1-1/4 pound charge of composition C-4 packed in a 2x1x11 inch mylar-film container (bag)

Table 4-1. Leading Characteristics, Explosive Charges, and Initiating Devices.

Nomenclature	National Stock Number	Dimensions (Inches)				Weight	
		Length	Width	Diameter	Height	Gross	Explosive (One Item Only-Not For Pack)
Cap, Blasting, Electric, M6	1375-00-889-2003	3.0		0.275			13.5 grain
Cap, Blasting, Non-electric, J1 (comm'l)	1375-00-028-5228	2.344		0.237			13.5 grain
Cap, Blasting, Non-electric, No. 8 Delay (comm'l)	1375-00-028-5223						6.9 grain

Table 4-1. Leading Characteristics, Explosive Charges, and Initiating Devices-Continued

Nomenclature	National Stock Number	Dimensions (Inches)				Weight	
		Length	Width	Diameter	Height	Gross	Explosive (One Item Only-Not For Pack)
Cap, Blasting, Non-electric, M7	1375-00-756-1864	2.35		0.241			13.5 grain
Charge, Demolition Block, M5A1	1375-00-028-5148-M038	12.00	2.00		2.00	2.5 lb	2.5 lb
Charge, Demolition Block, M112	1375-00-724-7040-M023	11.25	1.25		2.06	1.25 lb	1.25 lb
Charge, Assembly Demolition, M183	1375-00-926-3985-M757	10.25	4.87		12.75	24 lb	20.00 lb
Charge, Assembly, Demolition, M37	1375-00-028-5245-M756	10.25	4,87		12.75	24 lb	20,00 lb
Mine, Antitank, M15	1345-00-028-5118-K180			13.125	4.875	30 lb	22,00 lb
Charge, Demolition - Chain, M1	1375-00-028-5133-M035						20.00 lb/ 8 pack
Charge, Demolition, Block M2	1375-00-028-5135 M036	11	2		2		20,00 lb/ 8 pack
Charge, Demolition, Block, 8 lb, TNT	1375-00-028-5147-M034						8.00 lb
Cord Detonating	1375-00-028-5161-M455	5000 ft in 100 ft spools		0.210		111.0	0.006 lb per ft
	1375-00-028-5168-M456	4000 ft in 500 ft spools		0.235		117.00	0.007 lb per ft
	1375-00-204-0851-M458	3000 ft in 1000 ft spools		0.235		77.00	0,007 lb per ft
	1375-00-782-5527-M456	8000 ft in 1000 ft spools		0.235	191.00		0.007 lb per ft

Table 4-1. Leading Characteristics, Explosive Charges, and Initiating Devices-Continued

Nomenclature	National Stock Number	Dimensions (Inches)				Weight	
		Length	Width	Diameter	Height	Gross	Explosive (One Item Only-Not For Pack)
	1375-00-965-0800 M456	6000 ft in 1000 ft spools		0,235		152.00	0.007 lb per ft
Fuse, Blasting, Time (Safety)	1375-00-028-5149 M670	4000 ft in 50 ft coils		0.205		93.0	0.007 lb per ft
(M700)	1375-00-038-5246-M670	4000 ft in 50 ft coils		0.195		94.0	0.007 lb per ft
Igniter, Fuse, Weatherproof, M2	1375-00-028-5199-M766	3.34		0.50			
Igniter, Fuse, M60	1375-00-691-1671-M766	3.90		0.63		0.25	0.04 grain
Squib, Electric, M1 Flash Vented	1377-00-219-8567	1.5		0.27			1.6 grain

Table 4-2. Disposal Accessories and Equipment

Nomenclature	NSN	Application
Adapter, Priming, M1A4	1375-00-212-4595 1375-00-565-4141	Secure blasting cap in threaded cap well of demolition charge.
Battery, Silver Chloride, Dry Cell, BA-245/u (0°F to +125°F)	6135-00-128-1632	Authorized for use in the blasting galvanometer.
Battery, Silver Chloride, Dry Cell, BA-2245/u (-20°F to 0°F)	6135-00-883-9909	Authorized for use in the blasting U galvanometer.
Cable, Power, Electrical, Firing 500 ft coil	6145-00-299-6172	Use in electrical firing systems.
Cable, Reel Assembly	1375-00-212-4618	
Clip, Detonating Cord, M1	1375-00-212-4602	Used to connect two lengths of detonating cord.
Connector, Detonating Cord	1375-00-225-2419	To connect two strands of detonating cord or to fasten a blasting cap to detonating cord.

Table 4-2. Disposal Accessories and Equipment-Continued

Nomenclature	NSN	Application
Crimper, Blasting Cap, M2	5120-00-029-0683	Used to squeeze the shell of non-electric blasting cap around time blasting fuse or detonating cord, and to cut time blasting fuse and detonating cord.
Galvanometer, Testing	6625-00-539-8444	Testing electrical firing systems.
Knife, Pocket	1386-00-832-4175	
Machine, Blasting, 10 Cap	1375-00-212-4614	Electric firing system initiator.
Machine, Blasting, 10 Cap, M32	1375-00-935-9173	Electric firing system initiator.
Machine, Blasting, 50 Cap	1375-00-141-9495	Electric firing system initiator.
Machine, Blasting, 50 Cap, M34	1375-00-567-0223	Electric firing system initiator.
Tape, Computing, Demolition Charge	1375-00-590-2781	
Tape, Insulation, Electrical, Adhesive, 3/4-inch wide	5970-00-644-3167	
Tape, Pressure Sensitive	8135-00-914-1614	
Adhesive, 2-inch wide	8135-00-663-0916	
Test Set, Blasting Cap	4925-00-999-3454	Testing electrical firing systems,
Twine, Hemp, #18 8-oz ball	4020-00-241-8892	

with pressure-sensitive adhesive tape on one surface, protected by a peelable paper cover. This charge is an improved version of the conventional M5A1 block demolition charge and replaces it as the standard item of issue. The M112 block demolition charge is used in the same manner as the M5A1 block demolition charge and is of a more efficient shape and handier size.

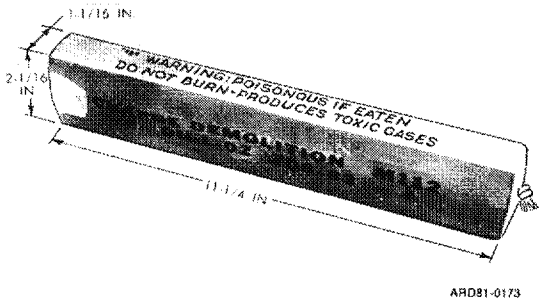

Figure 4-2. M112 demolition charge.

(3) Charge, assembly, demolition, M183 (fig. 4-3). The M183 demolition charge assembly consists of 16 block demolition charges M112 and 4 priming assemblies M15 for a total explosive weight of 20 pounds. The demolition blocks are packed in two M5 Charge Bags, 8 blocks per bag, and the assembly is placed in an M85 canvas carrying case. Each priming assembly consists of a 5-foot length of detonating cord with an RDX booster crimped to each end and a pair of detonating cord clips M1 for attaching the priming assembly to a detonating cord main line. This assembly replaces the M37 demolition charge assembly as the standard item of issue. The M183 charge assembly can be lashed or otherwise used as a whole unit, or individual 1-1/4 pound M112 block charges can be removed from the carrying case and charge bags and used separately. For detonation of munitions, any number of assemblies can be attached and prepared for simultaneous detonation as required by the individual item DMWR.

(4) Charge, assembly, demolition, M37 (fig. 4-4). The M37 demolition charge assembly

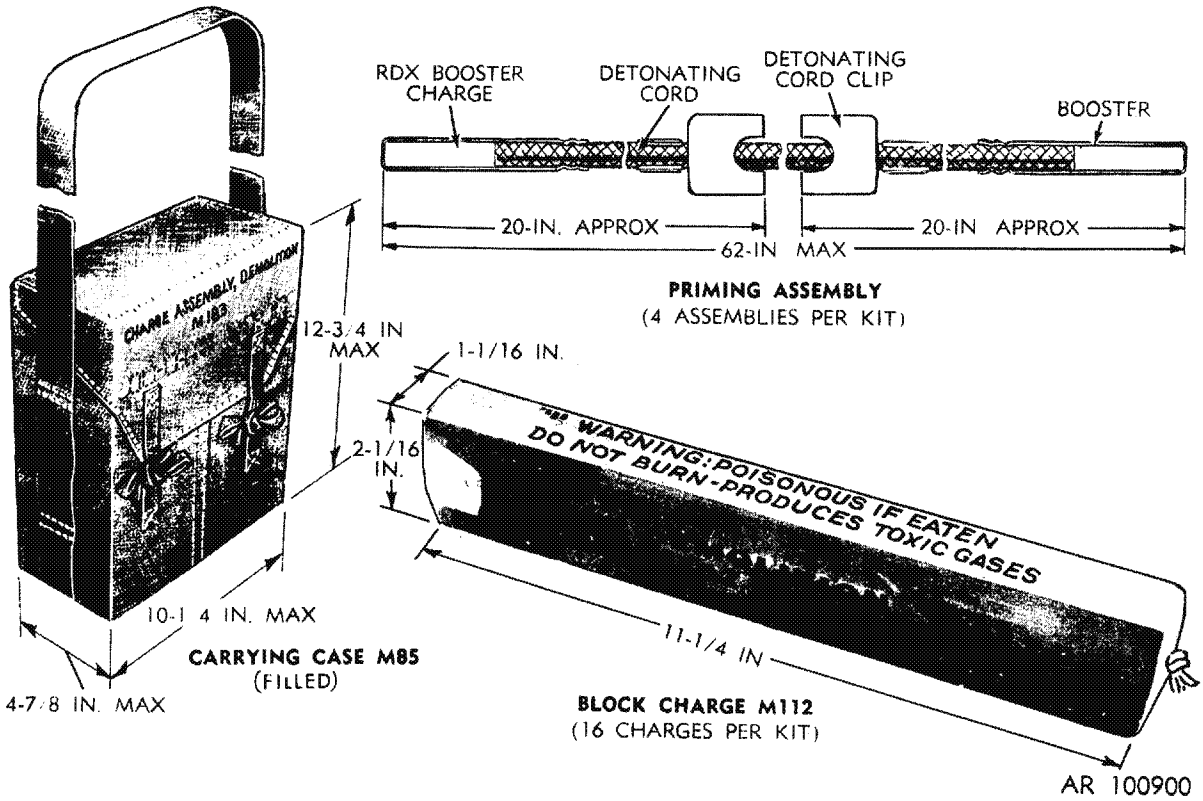

Figure 4-3. M183 demolition charge assembly.

consists of four M5A1 (Comp C-4) demolition blocks per bag; two bags and two M15 priming assemblies per canvas carrying bag for a total explosive weight of 20 pounds. Two demolition charge assemblies are packed in a wooden box (total weight: 57 pounds). Generally, the M37 assembly has been replaced by the M183 demolition charge assembly.

b. Demolition materials which may be used in lieu of Charge, Demolition M183 as authorized by DMWR or specific waiver.

(1) Mine, antitank, M15 (fig. 4-5) In some areas, quantities of AT Mine M15 are in excess of current requirements. Consequently, these mines may be used as demolition charges when a 20 pound, concentrated charge (or multiples of same) is required and fragments from the mine's steel case will present no hazard. Use of the excess mines will save expenditures of Charge Assemblies M183 and M37 on jobs where just a bulk of explosive is required. Mine M15 is a disk-shaped device 13-1/8 inches in diameter and 4-7/8 inches in height. It contains 22 pounds of explosive charge composition B in a steel case. In normal operation as a mine, AT Mine fuze M603 is installed in the large fuze well in the center of the top of the mine. Booster M120 is permanently installed in the main fuze well. Two smaller, secondary fuze wells (one in the side and one in the bottom) are also available and, in normal use, are for installation of boobytraps. If the secondary fuze wells are used, a special booster, AT Mine Activator M1, is required. For use of the mine as a demolition charge, AT Mine Fuze M603 will not normally be installed.

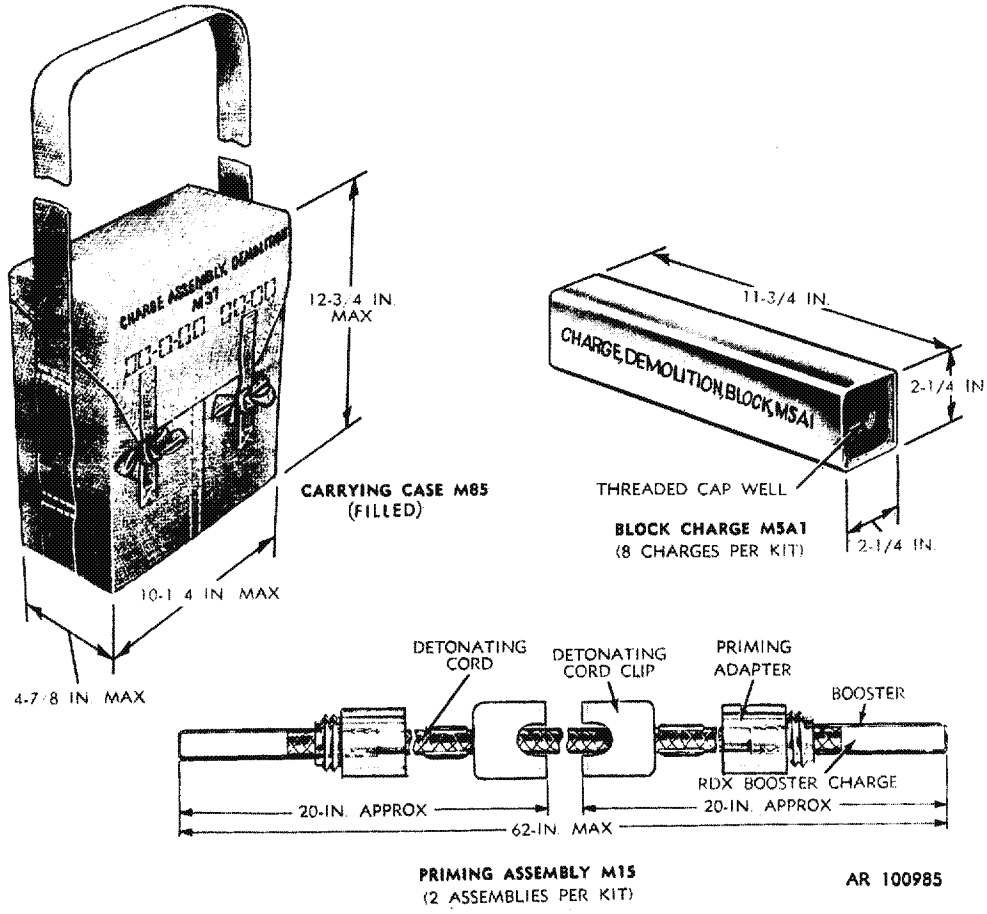

Figure 4-4. M37 demolition charge assembly.

(2) Charge, demolition, chain, M1. The M1 chain demolition charge consists of eight 2-1/2 pound 75-25 Tetrytol charges strung on detonating cord and packed one chain per haversack.

(3) Charge, demolition block, M2 (fig. 4-6). The M2 block demolition charge contains 2-1/2 pounds of 75-25 tetrytol with a tetryl booster pellet and a threaded cap well cast in each end. Each block is wrapped in olive-drab, asphalt-impregnated paper; the blocks are packed 8 per haversack.

(4) Charge, demolition, block, 8 pound TNT. The eight pound TNT block demolition charge is packed one per sealed waterproof barrier wrapper.

(5) Other excess munitions and explosives. Other excess munitions and explosive items scheduled for demilitarization may be used as demolition charges and in priming techniques to save stocks of Demolition Charge Assemblies M37 and M183, and prevent waste. In addition, other small explosive items scheduled for disposal may be mixed in with the main charge for the most cost-effective operation. The use of such explosives requires that fragments be of no consequence, that adequate area is available, that there is adequate time to set up the priming arrangement, that the substitutes contain sufficient explosive charge, and that the operating personnel have sufficient technical information to safely initiate these other substitute demolition items. Initial tests should

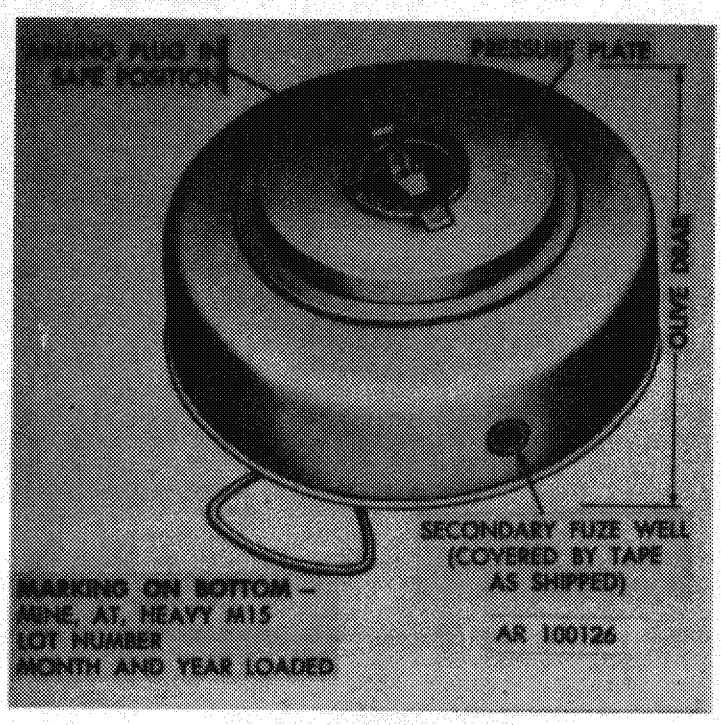

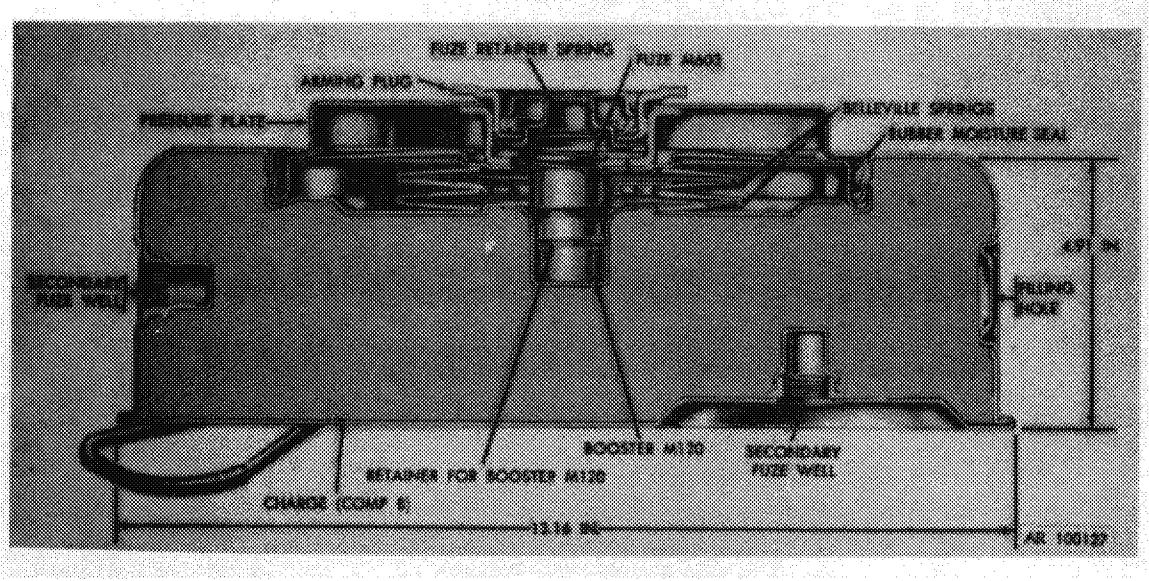

Figure 4-5. Heavy HEAT mine M15 with M603 antitank mine fuses installed cross section.

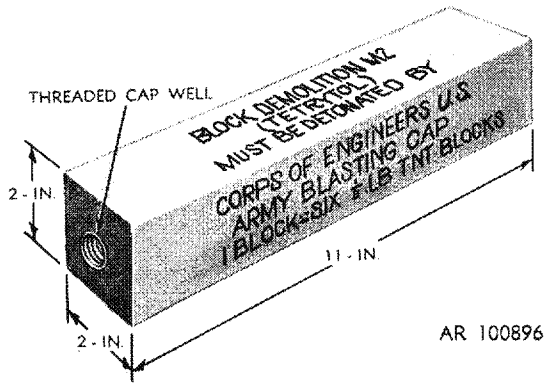

Figure 4-6. M2 block demolition charge, tetrytol.

be run to determine that propagation of the explosion is complete for the quantities of munitions to be destroyed. In addition, all safety requirements in the Demilitarization Disposal DMWR's must be followed. Authority to run the tests and use alternate demolition charges must first be obtained from Commander, US Army ARRCOM, ATTN: DRSARMAD, Rock Island, IL 61299.

4-3. DEMOLITION CHARGE INITIATORS

a. General. Charge initiators include a wide range of devices and materials which contain explosives in some form and which are used to initiate the detonation of demolition charges.

b. Blasting Caps. Blasting caps are the main elements used to initiate high explosives. They function by translating a small signal, either a flame or a pulse of electricity, into a detonation wave. They are designed for insertion into cap wells and are also the detonating element in certain firing devices. Blasting caps are classified by type of ignition and strength. Military electric blasting caps are instantaneous ignition. Commercial electric blasting caps can be delay or instantaneous ignition; No. 8 strength delay caps are generally used since they are compatible with military dynamite. The blasting caps listed below, both electric and nonelectric, are recognized as interchangeable within NATO (the recognized NATO terms for blasting cap is 'detonator').

Detonator	Country of Origin
Cap, blasting, electric, M6	US
Cap, blasting, non-electric, M7	US
Electric detonator	Italy
Nonelectric detonator ET4	Italy
Detonator No. 1	Netherlands
Ordinary PRB detonator	Belgium
BRISKA detonator	France
DM11 detonator	Germany

Commercial blasting caps J1 (non-electric caps) may be used in place of military caps M7, and commercial blasting caps J2 (electric caps) may be used in place of military caps M6, The main charge for the J1 and J2 blasting caps is approximately double that of the commercial No. 8 blasting caps.

(1) Caps, blasting, electric (fig. 4-7). These are used when a source of electricity, such as a blasting machine, is available. Electric caps have lead wires of various lengths, the most common being 12 feet long. To prevent accidental firing, they have a short-circuiting shunt which must be removed before using the cap. If the cap is without a shunt, the bare ends of the lead wires will be twisted together to provide the shorting action to prevent accidental initiation by static electricity. Electric blasting caps require about half an ampere of electricity passing through their wires for ignition. Misfires can result from mixing electric caps of different characteristics in a series circuit-one type cap fires before the others have been given enough electrical energy to fire. With the exception of the military M6 cap, electrical characteristics of caps can vary greatly, even from lot to lot made by one manufacturer. For this reason, different types of commercial caps and even different lots of the same type made by the same manufacturer should never be put together in a blasting circuit.

(2) Cap, blasting, electric, M6. Electric blasting cap M6, an instantaneous ignition No. 12 strength cap, is the standard Army electric blasting cap. It initiates any standard demolition charge. Blasting caps M6 are electrically uniform and, for this reason, any lot of M6 caps may be mixed with any other lot of M6 caps in a blasting circuit without fear of misfires resulting from different

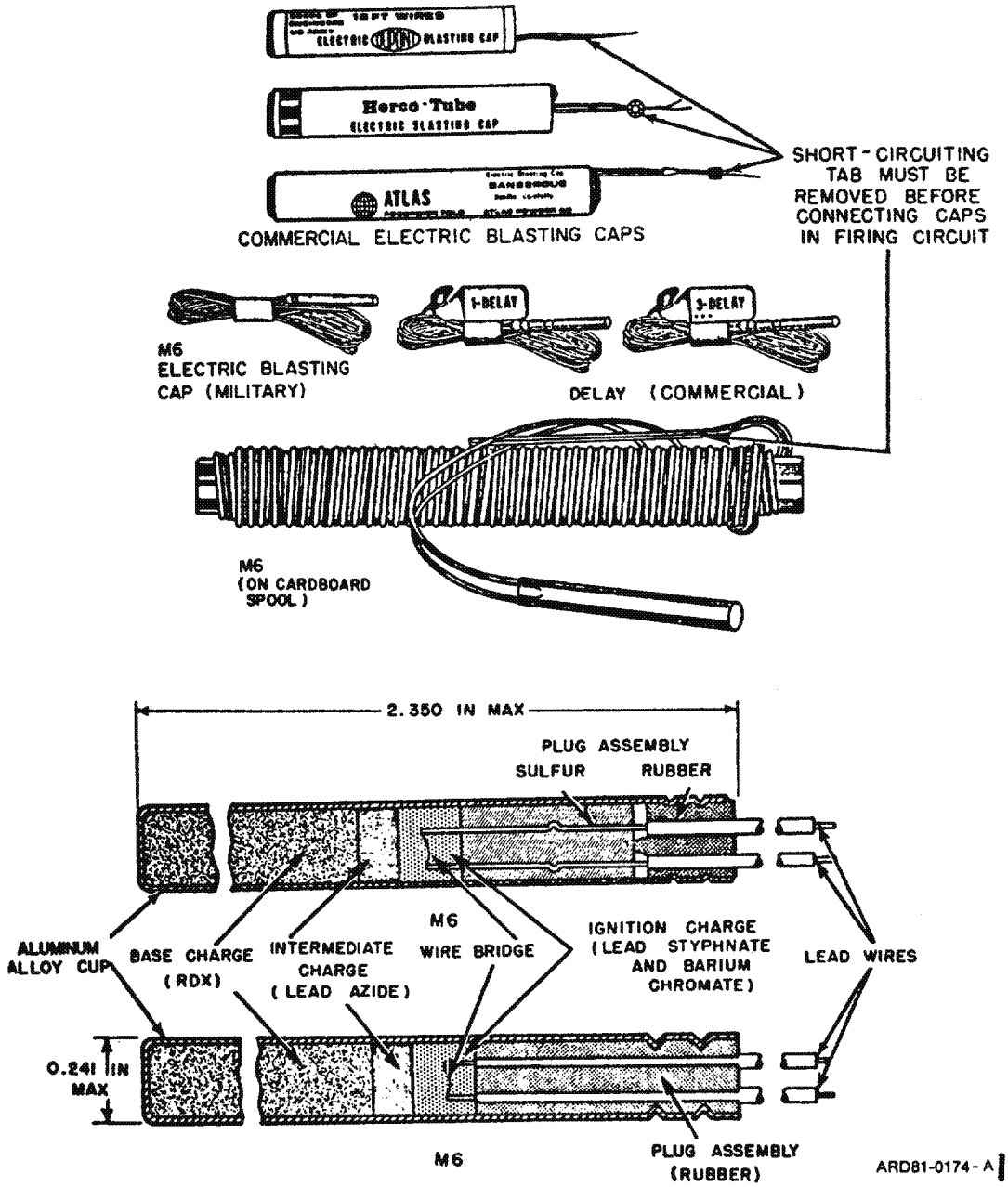

Figure 4-7. Electric blasting cap.

characteristics. Electric blasting cap M6 is replacing electric blasting cap J-2. The M6 caps are packed 6 caps per carton, 1 carton per waterproof bag, 25 bags per fiberboard container, 6 containers (900 caps) per waterproof lined wooden box (114 lb gross).

(3) Caps, blasting, nonelectric, (fig. 4-8). Nonelectric blasting caps initiate any standard demolition charge. The caps require only a small spit of flame or a shock on their igniter charge (within the cup) for ignition. A time blasting fuse or the primer in a firing device coupling base may provide the flame; the shock may be provided by a detonating cord which is initiated by another cap.

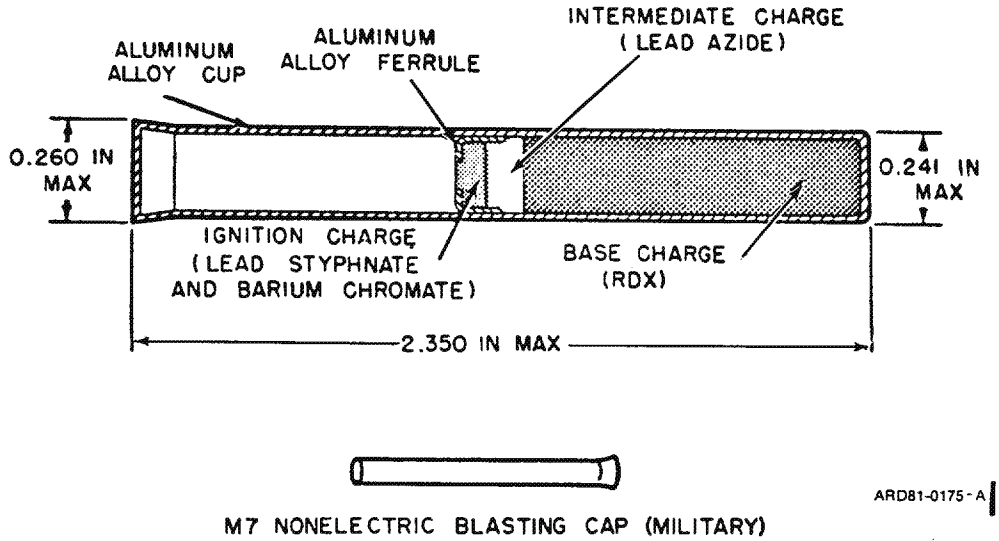

Figure 4-8. Military nonelectric blasting cap.

(4) Cap, blasting, nonelectric, M7. The standard Army nonelectric blasting cap is the M7, replacing the older commercial J1, No. 6 and No. 8. The open end of the M7's cup is flared to make insertion of a fuse or coupling base nipple easier. The caps are packed 6 caps per carton, 1 carton per waterproof bag, 50 bags per fiberboard container, 12 containers (3,600 caps) per wooden box.

c. Blasting Fuse

(1) Time blasting fuse. Time blasting fuse transmits a flame from a match or igniter to a nonelectric blasting cap or other explosive charge providing a time delay wherein blasters may retire to a safe distance prior to the explosion. There are two types: safety fuse and time fuse M700. These may be used interchangeably.

(2) Safety fuse (fig. 4-9). Safety fuse consists of black powder tightly wrapped with several layers of fiber and waterproofing material and may be any color, orange being the most common. The burning rate may vary for the same or different rolls from 30 to 45 seconds per foot under different atmospheric and climatic conditions (exposure for over 12 hours to the elements, extreme changes in temperature, and the like), and each roll must be tested prior to using in the area where the charge is to be placed. Particular precautions must be taken if used under water, as the rate of burning is increased significantly. In artic temperatures, the outside covering becomes brittle and cracks easily.

(3) Time fuse M700 (fig. 4-10).

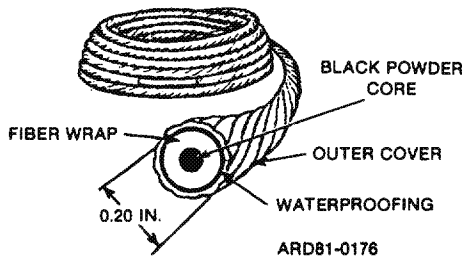

Figure 4-9. Safety fuse.

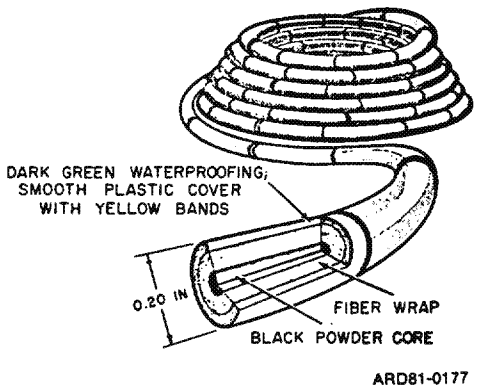

Figure 4-10. M700 time fuse.

This fuse is similar to safety fuse and may be used interchangeably with it. The fuse is a dark green cord 0.2 inches in diameter with a plastic cover. Depending upon the time of manufacture, the cover may be smooth or have single bands around the outside at 12 or 18 inch intervals and double bands at 5foot or 90-inch intervals. These bands are provided for easy measuring purposes. The burning rate is approximately 40 seconds per foot. However, the burning rate always must be tested in the same manner as that for safety fuse. At arctic temperatures, the outside covering becomes brittle and cracks easily.

d. Detonating cord (fig. 4-11). Detonating cord (also known as primer and commercial type Primacord) consists of a core of PETN or RDX in a textile tube coated with a thin layer of asphalt. On top of this is an outer textile cover finished with a wax gum composition or plastic coating. It transmits a detonating wave from one point to another at a rate of between 20,000 to 21,000 feet per second (partially submerged watersoaked detonating cord will detonate if initiated from a dry end). Although it does not lose its explosive properties by exposure to low temperatures, the covering becomes stiff and cracks when bent. Thus, great care is required in using detonating cord primers in arctic conditions. Detonating cord is issued in a variety of types and classes including commercial types. Plastic reinforced and wirebound types are available. Detonating cord is used to prime and detonate other explosive charges. When its explosive core is detonated by blasting cap or other explosive devices, it will transmit the detonation wave to an unlimited number of explosive charges.

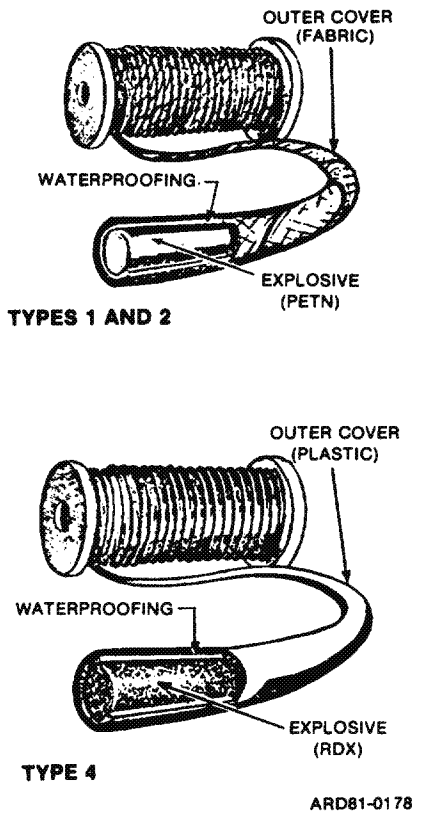

Figure 4-11. Detonating cord

e. Igniters

(1) M2 weatherproof fuse igniter (fig. 4-12). This device is designed as a positive method of lighting time blasting fuse. It operates effectively under all weather conditions-even under water if it is properly waterproofed. A pull on the striker retaining pin causes the striker to hit the primer, igniting the fuse. A sealing compound is applied between the fuse and the igniter to protect the open end of the fuse against moisture.

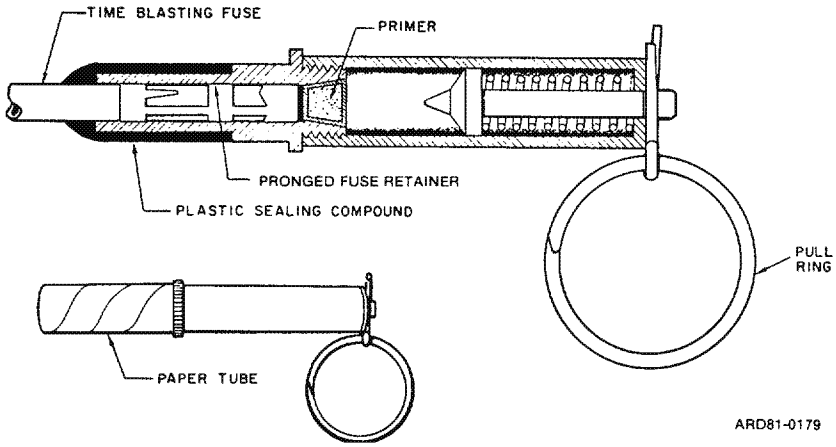

Figure 4-12. M2 weatherproof fuse igniter.

(2) M60 weatherproof fuse igniter (fig. 4-13). This device is designed to ignite time blasting fuse in all sorts of weather conditions and under water. The fuse is inserted through a rubber sealing grommet and into a split collet which clutches the fuse when the end cap on the igniter is tightened. A pull on the pull ring releases the striker assembly, allowing the firing pin to drive against the primer, which ignites the fuse.

(3) Squib, electric, M1 (fig. 4-14). The squib is a small explosive initiating device used to ignite pyrotechnic or incendiary compositions or black powder when a source of electricity, such as a blasting machine or battery, is available.

4-4. DEMOLITION ACCESSORIES

These accessories perform particular functions in detonation systems or adapt components or charges for disposal procedures.

a. Priming adapter M1A4 (fig. 4-15). The M1A4 priming adapter is used to secure an electric or nonelectric blasting cap in the threaded activator well of a standard demolition charge. The adapter is made of plastic and is externally threaded at one end so it can be screwed into the activator well. The bore in the non-threaded end is large enough to receive safety fuse or detonating cord (fig. 5-6). A blasting cap is held in place by a shoulder formed where the bores meet. A slot along the length of the adapter allows the insertion of lead wires of an electric blasting cap.

b. Clip, cord, detonating, M1 (fig. 4-16). The M1 detonating cord clip is a steel device used to hold together two strands of detonating cord either parallel or at right angles to each other. Connections are made more quickly with these clips than with knots.

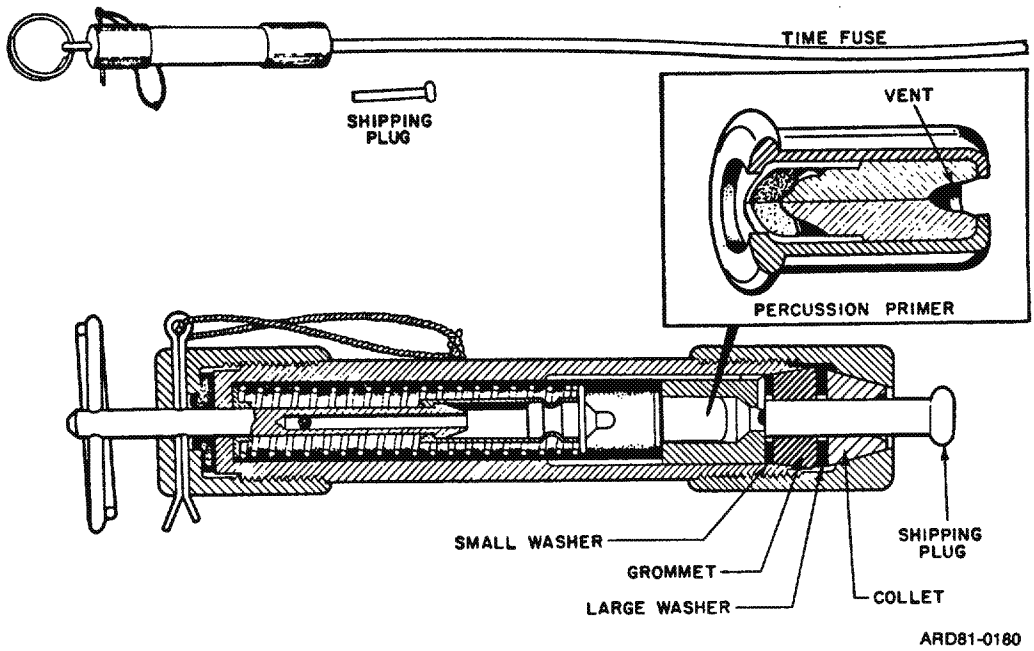

Figure 4-13. M60 weatherproof fuse igniter.

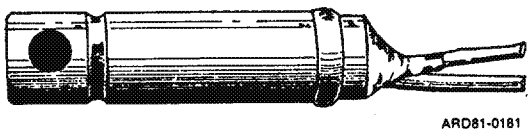

Figure 4-14. M1 flash-vented electric squib.

c. Connector, detonating cord (fig. 4-17). This connector is cylindrical and is composed of either white or blue plastic molding material. It is 1.72 inches long by 0.62 inch diameter with a 0.12 inch diameter hole located through the body of the connector. Also, two 65° slots are located on the same end as the holes and aid in easy installation of the detonating cord. The detonating cord connector is used to connect two strands of detonating cord. Connections are made more quickly with the connector than with knots.

4-5. DEMOLITION EQUIPMENT

a. Circuit Testers.

(1) Blasting galvanometer (fig. 4-18). The blasting galvanometer is an instrument used in testing the electric firing systems to check the continuity of the circuit (the blasting cap, firing wire, wire connections and splices). Its components include a D'Arsonval meter and a small, special silver-chloride battery. Where the meter is connected to a closed (continuous) circuit, the flow of current from the battery moves the meter needle across the scale. The extent of the needle's deflection is in proportion to the amount of resistance in the closed circuit (and on the strengths of the battery). Two types of batteries are authorized for use, one for temperature above 0°F, and the other for temperatures below 0°F (Table 4-2).

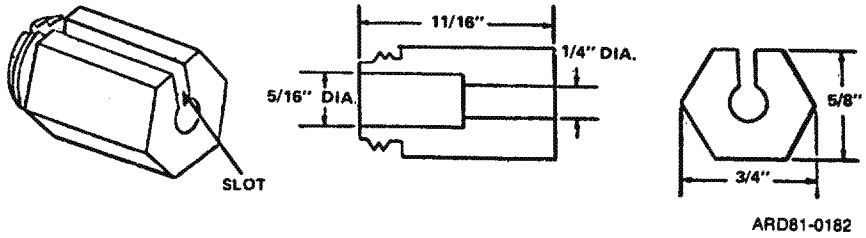

Figure 4-15. M1A4 priming adapter.

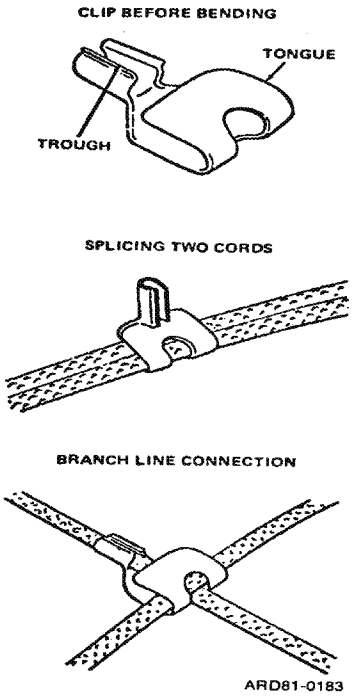

Figure 4-16. M1 detonating cord clip.

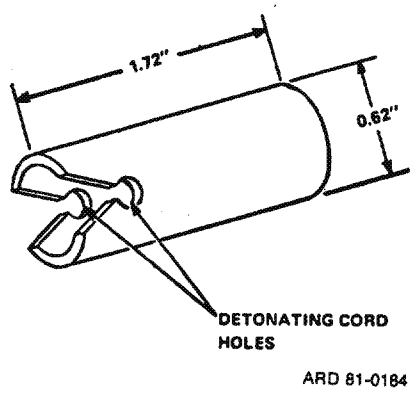

Figure 4-17. Detonating cord connector,

WARNING

ONLY USE SILVER CHLORIDE DRY CELL BATTERIES WHICH PRODUCE 0.9 VOLTS IN THE GALVANOMETER (TABLE 4-2). OTHER BATTERIES MAY PRODUCE SUFFICIENT VOLTAGE TO DETONATE ELECTRIC BLASTING CAPS. WHEN THE GALVANOMETER IS NOT BEING USED FOR EXTENDED PERIODS OF TIME, THE BATTERIES SHOULD BE REMOVED BECAUSE OF THEIR TENDENCY TO CORRODE.

(2) M51 blasting cap test set. This test set (fig. 4-19) was developed to replace the blasting galvanometer for continuity testing of electrical firing circuits. The test set is a self-contained unit with a magneto-type impulse generator, an indicator lamp, a handle

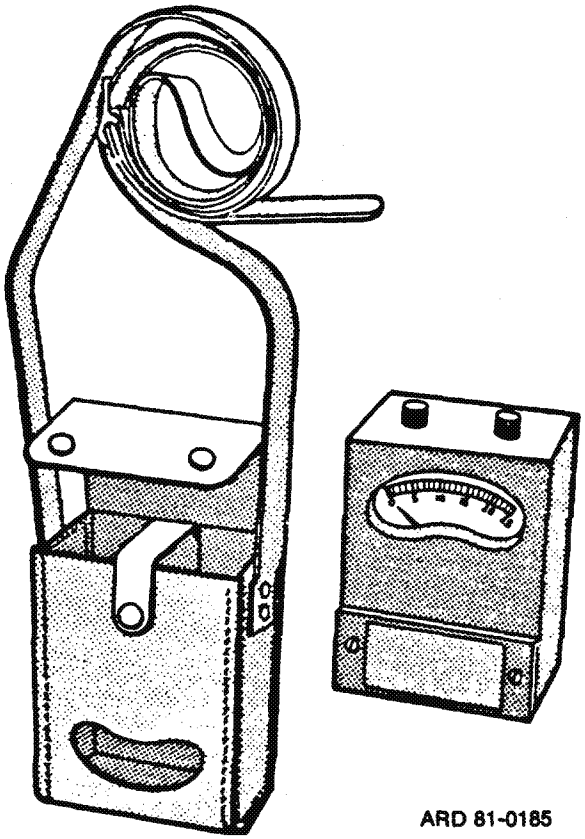

Figure 4-18. Blasting galvanometer.

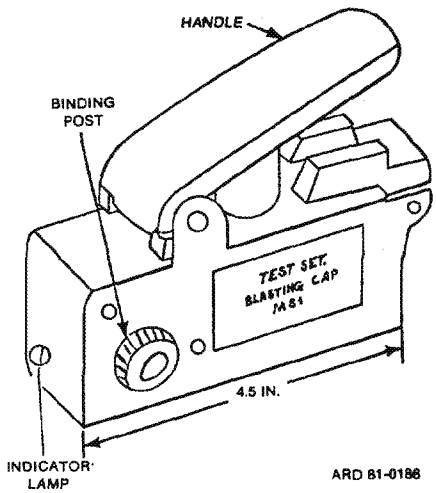

Figure 4-19. M51 blasting cap test set.

to activate the generator, and two binding posts for attachment of firing leads. The test set is waterproof and may be used at temperatures as low as -400°F. Continuity testing is accomplished by connecting the firing circuit to the test set binding posts and then depressing the handle sharply. If there is a cont 1uous (intact) circuit (even one created by a short), the indicator lamp will flash.

b. Blasting Machines (fig. 4-20). Blasting machines are used to provide the electric impulse needed in electrical detonations. There are six models which derive their power directly from a shunt-: wound generator and two models, the M32 and M34 which derives their power from an alternator and use a capacitor discharge output circuit. The term used in many NATO countries for "blasting machine" is "exploder" or "dynamo exploder." The generator type machines are all actuated by means of a gear-driven armature. The 10-cap machines have metal cases and twist-type drive handles. The higher capacity (30, 50, and 100 cap) machines have varnished or painted wood cases and plunger-type handles. The machines most often used are the 10-cap and 50-cap machines.

(1) Newer machines (10 cap and 50 cap). In addition to having significantly higher electrical output than their predecessors, these machines include a built-in safety circuit. This circuit allows no current to reach the terminals until the machine's handle (or plunger) has been actuated with sufficient energy to gain nearly the maximum output from the machine.

(2) Older machines (10 cap, 30 cap, 50 cap, and 100 cap). These include a switch which delays the flow of current from the generator to the output terminals until the handle (or plunger) is near the end of its travel. This switch assures that the output produced by the machine's mechanism does not reach the terminals until the operator is producing maximum force.

(3) Blasting machine: M32. This small, light-weight blasting machine is intended to replace the larger, heavier machines. Instead of a shunt-wound generator, this machine uses a small alternator which is gear-driven by the handle-actuated plunger. The electrical output

Figure 4-20. Actuating blasting machines.

ED_001691B_00007347

from the alternator is rectified and fed into storage capacitors. When sufficient energy is available in the capacitors (may require 3-4 strokes of the handle), an internal switching circuit discharges the electrical energy to the output terminals and, thus, to the blasting circuit. This machine is capable of initiating 10 M6 electric blasting caps.

(4) Blasting machine: M34. The M34 is similar to the M32 but is capable of initiating 50 M6 electric blasting caps.

c. Marking. Demolition equipment is identified by its nomenclature, identification number, contract number, place and date of manufacture, lot number, and net weight. This information is stenciled on the item itself, on its container, or on both. Some demolition devices do not have either an Army or a Navy identification number; these devices are identified by their nomenclature.

ED_001691B_00007347

CHAPTER 5

FIRING SYSTEMS PROCEDURES

5-1. GENERAL

This chapter contains general operating procedures for both the nonelectric and electric firing systems. It also includes procedures for priming charges, use of detonation cord, dual firing systems, preparation and use of ignition trains, and prevention and handling of misfires. More detailed information can be found in FM 5-25 and TM 9-1375-213-12.

WARNING

The preferred firing system for demolition is the electric firing system. When the electrical system is not feasible, or when there is an electromagnetic radiation hazard present, the nonelectrical firing system will be used.

When items to be detonated are covered with earth, blasting shall not be buried beneath ground level with the initiating charge. The initiating explosives should be primed with primacord of sufficient length to reach up through the covering to a point where the blasting cap may be connected above the ground level.

5-2. NONELECTRIC SYSTEMS

NOTE

A nonelectric priming system will normally be assembled in the field at the demolition site. Under some circumstances, if desired, some subassembling may be done in advance in order to save time or to avoid exposing components to rain, atc.. When it is desired to have 'he assemblies prepared more than t few hours in advance, use blasting cap sealant to waterproof the fuse cap joint. This sealant will protect the fuse cap joint for an indefinite period of time. The assembly will be treated as a blasting cap for storage and transportation (e.g., keep separate from other explosives). When using waterproof time blasting fuse igniter M60, it may be assembled to the blasting fuse and cap prior to insertion into the cap well of the explosive, IF, the safety pin is still installed.

A nonelectric system (fig. 5-1) consists of a fuse igniter, time blasting fuse, and nonelectric blasting cap. Upon activation, the fuse igniter initiates the time blasting fuse which transmits the flame that fires the blasting cap. The blasting cap provides a shock adequate to initiate the explosive charge. When more than one charge must be detonated simultaneously, the nonelectric system must be combined with detonating cord (pars. 5-12 through 5-16) to ensure simultaneous firing.

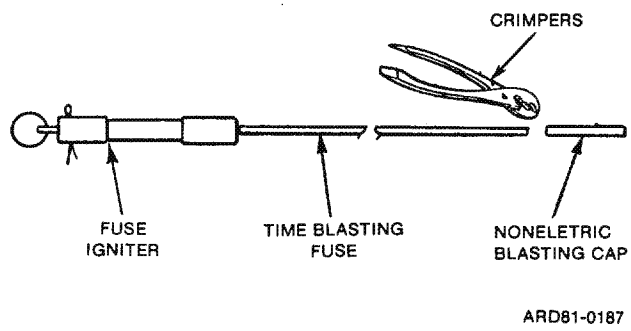

Figure 5-1. Nonelectric firing system.

5-3. SAFETY PRECAUTIONS FOR NONELECTRIC FIRING SYSTEMS

In addition to the general safety requirements in Chapter 2 the following precautions will be strictly adhered to in the use of nonelectric firing systems.

NOTE

Blasting caps less than the equivalent of a commercial No. 8 cap will not be used.

a. The ready supply of nonelectric blasting caps should be kept in non-propagating containers/packs. Blasting caps will be handled near their open ends.

b. Capped time blasting fuses will be handled carefully so that blasting caps do not contact each other.

c. The preparation of initiators will be performed at a distance of not less than 7.5 meters (25 feet) from the supply of blasting caps or other explosives.

d. The preparation of initiators and the priming of explosives will not be performed in advance of requirements. Prepared initiators, if not used, will be expended. They will not be returned to explosive storage locations.

e. Only sufficient explosives or initiators to meet the requirement of the operation involved will be brought to the disposal site.

f. Personnel engaged in demolition work shall have ample time to reach shelter affording overhead and frontal protection. The minimum distance between shelter and destruction pit or site shall be in accordance with TM 91300-206 and DARCOM-R 385-100.

5-4. ASSEMBLY OF NONELECTRIC SYSTEM

Assemble a nonelectric system as instructed in a through m below:

WARNING

TIME BLASTING FUSE WITH A ROUGH JAGGED CUT ACROSS THE END CAN CAUSE A MISFIRE OF THE BLASTING CAP.

NOTE

Cutting off at least 15 centimeters (6 inches) of fuse will reduce the possibility of a misfire from a damp powder train.

a. Cut and discard at least 15 centimeters (6-inch lengths) from free end of fuse. Cut will be made with cutting jaws of M2 crimper (fig. 5-2). If crimper does not have clean sharp jaws, use a sharp knife to cut the fuse. To assure that the fuse is cut square when using the knife, cut fuse against a solid wooden surface.

WARNING

TEST BURNING OF TIME BLASTING FUSE WILL BE PERFORMED DOWNWIND AT A MINIMUM SAFETY DISTANCE OF 7.5 METERS (25 FEET) FROM BLASTING CAPS OR OTHER EXPLOSIVES.

NOTE

All fuses in the same roll should burn at the same rate; although, rate of burning may vary from approximately 98 to 148 seconds per meter (30 to 45 seconds per foot) in different rolls. The M700 fuse burns at approximately 131 seconds per meter (40 seconds per foot).

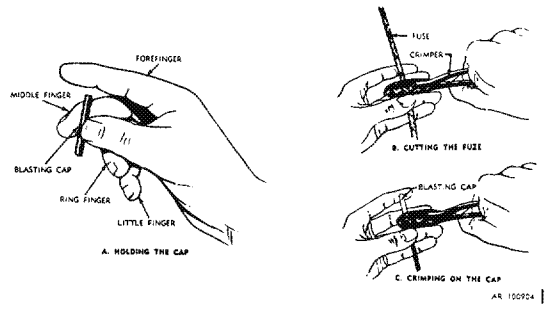

Figure 5-2. Holding, cutting, and capping time blasting fuse and detonating cord.

b. Cut off 0.91 meters (3 feet) of fuse and check burning rate. Ignite fuse with fuse igniter if available (par. 5-5), or cut a slit near one end of fuse, insert a match head into split, and light match (fig. 5-3). Note time it takes for fuse to burn. Compute burning rate. Compute length of fuse necessary to permit the person detonating the charge to reach shelter or a safe distance by walking at a normal pace before the explosion.

c. Cut necessary length of fuse squarely across. A minimum of 0.91 meters (3 feet) will be used.

NOTE

Omit the following step if a priming adapter is not being used.

d. Pass end of time blasting fuse through priming adapter (fig. 5-6).

e. Take one nonelectric blasting cap (fig. 5-6) from cap box.

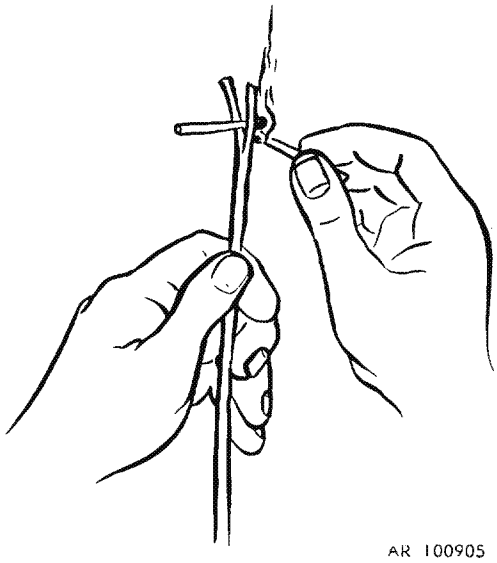

Figure 5-3. Lighting time blasting fuse with match.

WARNING

FOREIGN MATTER IN A BLASTING CAP MAY CAUSE A MISFIRE. IF FOREIGN MATTER IS TO BE REMOVED FROM A NONELECTRIC BLASTING CAP, DO NOT TAP CAP WITH A HARD OBJECT OR AGAINST A HARD OBJECT. NEVER BLOW INTO CAP. DO NOT INSERT ANYTHING INTO CAP TO REMOVE DIRT OR FOREIGN MATERIAL.

f. Inspect nonelectric blasting cap by looking into the open end. If any foreign matter or dirt is present, follow procedures below:

(1) Hold cap, near open end, between thumb and middle finger, of one hand (fig. 5-2).

(2) Aim open end of cap at palm of second hand.

(3) Gently bump wrist of one hand against wrist of other hand.

(4) If foreign matter does not come out, dispose of cap in accordance with local regulations.

WARNING

FORCING A TIME FUSE INTO A BLASTING CAP BY TWISTING OR OTHER MEANS MAY CAUSE CAP TO EXPLODE. DO NOT FORCE TIME FUSE INTO BLASTING CAP.

WARNING

•IF FUSE IS NOT IN CONTACT WITH EXPLOSIVES IN THE CAP, A MISFIRE MAY OCCUR.

•CONTACT BETWEEN CAP END OF TIME FUSE AND MOIST FINGERS OR OTHER DAMP OBJECTS CAN CAUSE A MISFIRE.

g. Hold time blasting fuse vertically at approximately arms length with square cut end up and slip blasting cap gently down over it so that ignition charge in cap is in contact with end of time fuse; if not in contact, it may misfire. If end is flattened or if it is too large to enter blasting cap freely, recut fuse or roll time fuse between thumb and fingers until size is reduced, to permit free entry.

h. After blasting cap has been seated, grasp time blasting fuse between thumb, ring, and little finger of less favored hand (left or right) and place forefinger over closed end of cap to hold it firmly against end of time fuse. Keep a slight pressure on closed end of cap with forefinger (C, fig. 5-2).

WARNING

•CRIMPERS ARE EQUIPPED WITH FUSE CUTTER: MAKE CERTAIN CUTTING SECTION IS NOT USED DURING CRIMPING OPERATION.

•A CRIMP TOO NEAR THE EXPLOSIVE IN BLASTING CAP MAY CAUSE DETONATION. DO NOT CRIMP CAP MORE THAN 1/4-INCH FROM OPEN END.

i. Place crimpers around cap just above thumb and third finger. Slide second (middle) finger down outer edge of blasting cap to guide crimper (C, fig. 5-2) and thus obtain accurate crimping since finger can be used to locate open end of blasting cap.

WHEN CRIMPING A CAP DO NOT POINT CAP TOWARD OTHER PERSONNEL OR EXPLOSIVES.

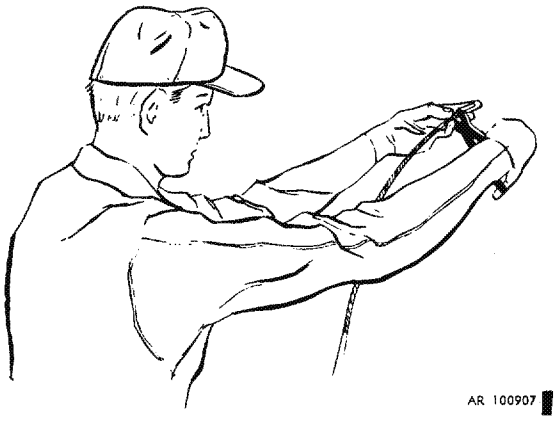

Figure 5-4. Proper position for M crimping blasting cap.

Figure 5-5. Deleted.

j. Extend arms, point cap out and away from body (fig. 5-4), and crimp cap at a point 1/8 to 1/4 inch from open end

k. Attach fuse igniter as follows:

(1) M2.

(a) Slide fuse retainer over end of fuse and seat firmly.

(b) Waterproof joint between fuse and igniter, if necessary, by applying sealing compound.

(2) M60.

(a) Unscrew fuse holder cap two or three turns.

(b) Press shipping plug into igniter to release split collet and rotate plug as it is removed.

(c) Insert end of fuse in place of plug- until fuse rests against primer base.

(d) Tighten cap sufficiently to hold fuse in place, thus waterproofing joint.

l. Priming with or without priming adapter is as follows:

(1) With priming adapter (fig. 5-6)

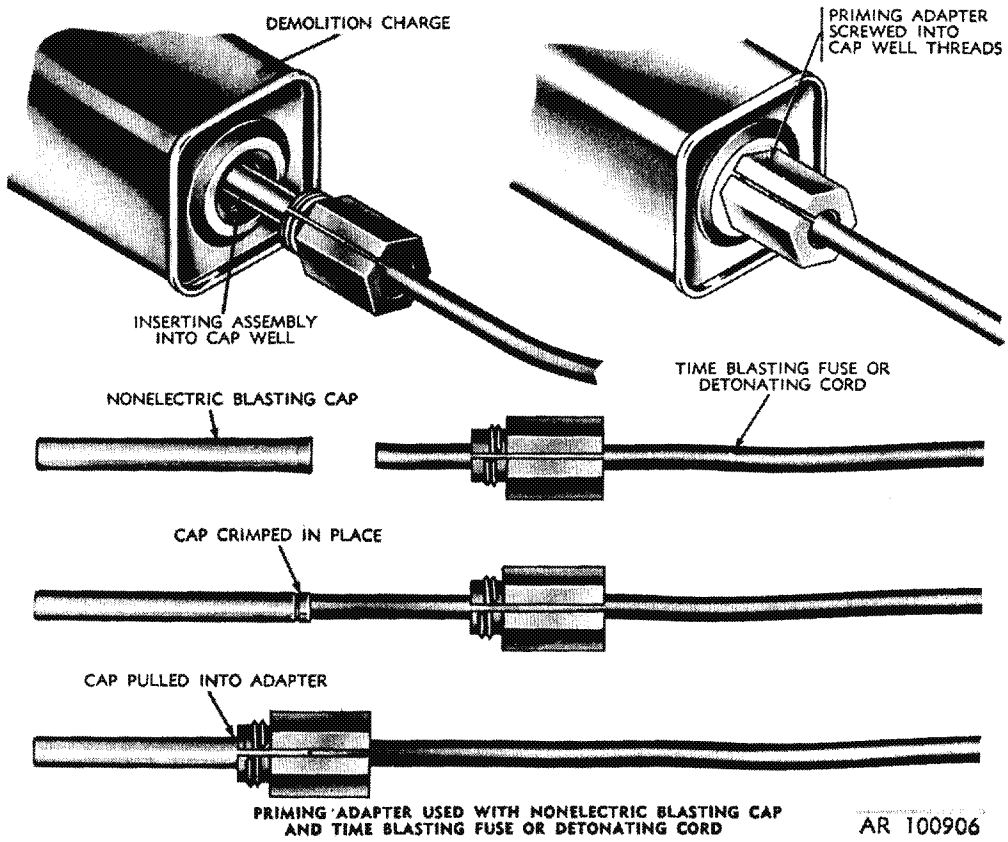

Figure 5-6. M1A4 priming adapter with nonelectric and time blasting fuse or detonating cord.

(a) Pull cap into adapter and insert into cap well of explosive.

(b) Screw adapter into place.

(2) Without priming adapter (method 1):

(a) Wrap a string tightly around demolition block; tie securely leaving approximately six inches of loose string on each end after making the tie.

(b) Insert blasting cap with fuse attached into cap well.

(c) Tie the loose string around fuse to prevent blasting cap from being withdrawn from block.

(3) Without priming adapter (method 2):

(a) Insert fused cap into cap well.

(b) Secure fuse to block, using tape or other available material, to prevent cap from being withdrawn.

5-5. IGNITING FUSE OF NONELECTRIC SYSTEM

Fuse may be ignited using one of the following methods:

WARNING

THE SIGNAL FOR IGNITION OF THE FUSE M'ST BE GIVEN BY THE INDIVIDUAL IN CHARGE AND ONLY AFTER ALL OTHER PERSONNEL IN TIE VICINITY ARE PROTECTED OR HAVE REACHED A SAFE DISTANCE.

NOTE

If M60 igniter fails to function, it can be reset quickly without disassembly by pushing plunger all the way in and firing as before. If igniter still fails to function, replace with serviceable igniter.

a. M60 Fuse Igniter.

(1) Remove safety pin.

(2) Push plunger all the way in.

(3) Turn release ring 1/4 turn and pull.

(4) Note time of ignition.

(5) Retire to safe distance and figure expected time detonation.

b. Time Blasting Fuse Igniter M2. To fire, hold barrel in one hand and pull on pull ring with other hand.

c. Lighting Time Blasting Fuse with a Match. If a fuse igniter is not available, light the time blasting fuse with a match by splitting the fuse at the end (fig. 5-3) placing the head of an unlighted match in the powder train, and then light the inserted match head with a flaming match or by rubbing the abrasive on the match box against it.

5-6. ELECTRIC FIRING SYSTEMS

WARNING

WHEN HANDLING ELECTRIC BLASTING CAPS DO NOT HOLD THE EXPLOSIVE END OF THE CAP, HOLD THE END OF THE CAP WHICH IS CONNECTED TO THE LEAD WIRES.

The electric firing system (fig. 5-7) consists of an electric blasting machine, a firing wire, and an electric blasting cap. When the blasting machine is activated, it generates an electric impulse which travels through the firing wire and cap lead wires to fire the electric blasting cap. Initiation of the cap detonates the explosive charge into which the cap has been inserted.

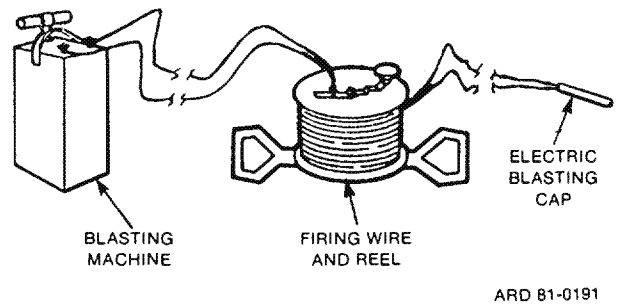

Figure 5-7. Electric firing system.

5-7. SAFETY PRECAUTIONS FOR ELECTRIC SYSTEMS

The general safety requirements in Chapter 2 will be followed during all operations using an electric firing system. A possibility exists that electric systems may be energized to dangerous levels from outside sources such as static electricity, induced electric currents, radar, radio communication equipment, high tension wires, etc. The following precautions will be taken to reduce the possibility of premature initiation of electric blasting caps.

a. Electric blasting caps will be connected to the firing circuit before connection to the demolition charge. This procedure will minimize injury and damage should an electric blasting cap prematurely detonate.

b. Minimum distances between transmitters and electro-explosive devices will be in accordance with TM 9-1300-206 and DARCOM-R 385-100.

c. Blasting caps less than the equivalent of commercial No. 8 will not be used.

d. Electric blasting caps of different manufacture or type will not be used in the same system.

e. When uncoiling the leads of blasting caps, the cap will not be held directly in the hand, but will be held by the wires approximately 2.5 centimeters (1 inch) from the cap. The lead wires will be straightened out by hand and not thrown, waved, or snapped to loosen coils.

f. Individuals connecting/testing electric blasting caps will make use of available protective cover when completing the circuit. The distance between the individual and the blasting cap will be the maximum permitted by length of cap leads. The individual will keep his back toward the blasting cap when making the connection.

g. Blasting caps will be tested for continuity with a galvanometer or .'51 test set prior to connecting to firing circuit. The shunt will not be removed from the lead wires of the blasting cap until the moment of testing.

h. The individual removing the shunt will ground himself to prevent accumulated static electricity from firing the blasting cap by grasping the firing wire. Immediately after testing, the lead wires will be shunted by twisting the bare ends of the wires together. The wires will remain shunted until connection into the firing circuit.

i. Both ends of the firing wires will be shunted except when firing the charge or testing the circuit. The connection between blasting caps and the circuit firing wires will not be made unless the power end of the firing wires is shunted and grounded.

j. Firing wires will be secured near the point where the blasting cap(s) are connected.

k. Prior to making connections to the blasting machine, the firing circuit will be tested with a galvanometer or M51 test set for electrical continuity.

l. The blasting machine or its activating device will not be surrendered to the individual designated to fire the charge until the supervisor is assured that the area is cleared of personnel, equipment, etc.

m. Disposal operations will not be conducted during an electrical storm or when such a storm is approaching. Additionally, disposal by detonation using an electrical firing system will not be conducted during sand, dust, or snow storms. Under such conditions, all electrical operations will be suspended, cap and lead wires shunted, and personnel removed from the disposal area.

5-8. PRELIMINARY ELECTRICAL CONTINUITY TESTING

The galvanometer, blasting caps and firing wires will be tested prior to the disposal operation in accordance with the following paragraphs.

WARNING

PRIOR TO USING GALVANOMETER, ENSURE THAT ONLY THE APPROPRIATE SILVER CHLORIDE DRY CELL BATTERY IS INSTALLED. ANY OTHER BATTERY MAY PRODUCE SUFFICIENT VOLTAGE TO DETONATE BLASTING CAPS.

a. Galvanometer. The galvanometer (fig. 5-8) will be tested prior to use by holding a piece of metal across its two terminals. If this does not cause a wide deflection of the needle (29 to 25 units), the battery is weak and will be replaced. When used in a cold climate, the galvanometer will be protected from freezing by keeping it under clothing and near the body.

b. Blasting Caps.

(1) Each blasting cap to be used in the electric firing system will be individually tested.

WARNING

•.ALWAYS POINT THE EXPLOSIVE END OF BLASTING CAP AWAY FROM THE BODY, OTHER PERSONNEL, AND EXPLOSIVES.

•.INDIVIDUALS WILL MAKE USE CF AVAILABLE PROTECTIVE COVER AND KEEP THEIR BACKS TOWARD THE BLASTING CAP WHEN TESTING CAPS FOR CONTINUITY WITH A GALVANOMETER. THE DISTANCE BETWEEN INDIVIDUALS AND BLASTING CAP WILL BE THE MAXIMUM PERMITTED BY LENGTH OF CAP LEADS.

ED_001691B_00007347

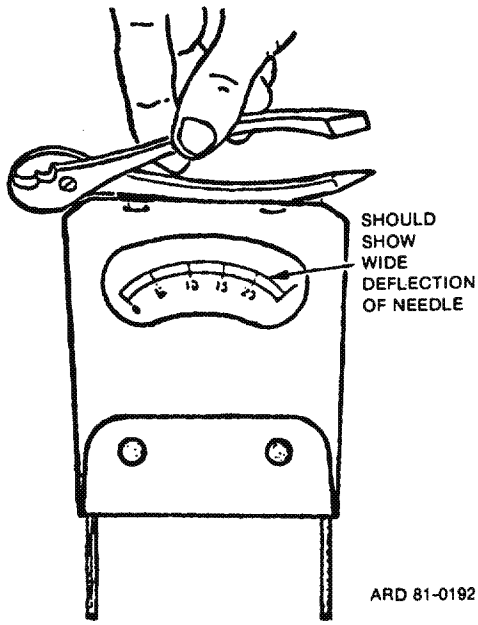

Figure 5-8. Testing the galvanometer.

WARNING

•WHEN UNCOILING CAP LEAD WIRES, THE CAP WILL NOT BE HELD DIRECTLY IN THE HAND, BUT WILL BE HELD BY THE WIRES APPROXIMATELY 2.5 CENTIMETERS (1 INCH) FROM THE CAP.

•.LEAD WIRES WILL BE STRAIGHTENED OUT BY HAND. DO NOT THROW, WAVE, OR SNAP TO LOOSEN COILS.

(2) Carefully extend cap lead wires to maximum length.

(3) Secure cap to prevent movement by placing in a hole or behind a barricade.

WARNING

AN INDIVIDUAL REMOVING THE SHUNT WILL GROUND HIMSELF TO PREVENT ACCUMULATED STATIC ELECTRICITY FROM FIRING THE BLASTING CAP BY GRASPINC THE FIRING WIRE.

(4) Remove shunt.

(5) Hold one cap lead wire to one post of galvanometer and touch other lead wire to other post.

(6) If cap is satisfactory, galvanometer needle will deflect slightly less than it did when the instrument was tested.

(7) Dispose of defective caps by placing with material being detonated.

WARNING

CARE MUST BE TAKEN TO PROTECT BLASTING CAPS FROM BEING STRUCK OR COMPRESSED BY OVERBURDEN THAT IS PLACED ON THE MUNITIONS OR EXPLOSIVES BEING READIED FOR DISPOSAL. DO NOT PLACE DEFECTIVE CAPS TOO CLOSE TO THE MAIN DETONATING CHARGE.

(8) Shunt lead wires of all caps immediately after testing. Wires will remain shunted until connection to firing circuit.

c. Firing Wire. The firing wire may be tested on the reel, but must be retested after unreeling as uncoiling may separate broken wires. Firing wire will be tested as follows:

(1) Separate firing wire at both ends. Touch wires at one end to galvanometer posts. The needle should not move. If needle moves, there is a short circuit in firing wire. Locate and repair as required.

(2) Shunt wires together at one end and touch those at other end to galvanometer posts. This should cause a wide deflection of needle. No movement of the needle indicates a break in firing wire. A slight movement indicates a point of high resistance which could be caused by several strands of multi-stranded wire being broken or by wires not being clean. Locate defect and repair as required.

5-9. CONNECTING/SPLICING ELECTRIC WIRES

WARNING

•.THE FIRIDG WIRE WILL BE SHUNTED AND GROUNDED AT THE INITIATING PCINT PRIOR TO CONNECTION OF THE BLASTINC CAP.

•.THE PERSON MAKING THE CONNECTION WILL WORK AS FAR FROM BLASTING CAP AS CAP LEAD WIRES WILL ALLOW WITH BACK TURNED TO TIE CAP TO MINIMIZE INJURY IN CASE OF PREMAT'TURE DETONATION.

NOTE

Other methods of splicing may be used as long as electrical continuity is maintained.

a. Insulated wires, before splicing, must have the insulating material stripped from the ends. Expose about e centimeters (3 inches) of bare wire (fig. 5-9. detail A), and remove any foreign matter such as enamel by carefully scraping the wire with the back of a knife blade or other suitable tools. The wires should not be nicked, cut, or weakened when the wires are bared, and multiple strand wires should be twisted lightly after scraping.

b. Connecting may be accomplished by any one of the following methods.

(1) Method 1 (fig. 5-9).

(a) Point free ends in opposite directions (detail A), join with a few tight twists around each other, and bend remaining ends up, away from joint (detail B).

(b) Twist these ends to form a pigtail (detail C), which is at right angles to connected wires.

(c) Push pigtail to one side to lie along one of the wires (detail D). Tape connection to ensure complete insulation.

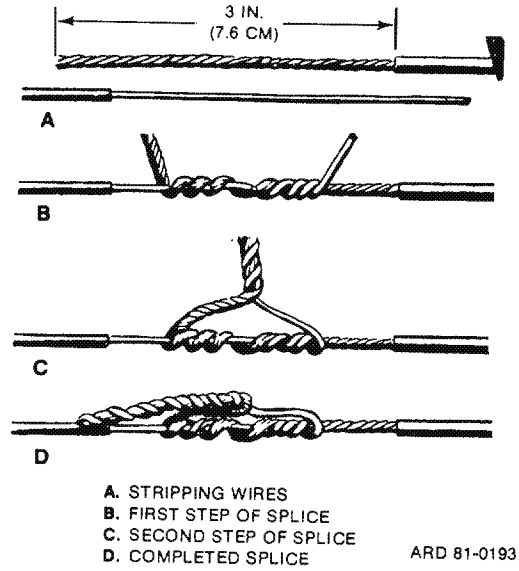

Figure 5-9. Wire splicing.

(2) Method 2.

(a) Place the two wires to be connected, side by side, with free ends pointing in same direction and wind them together by twisting.

(b) Tape to ensure complete insulation.

c. Splicing. The following precautions will prevent a short circuit.

(1) If pairs of wires are spliced, stagger the two separate splices and tie with twine or tape (detail A, fig. 5-10).

(2) An alternate method is shown in detail B. Splices are separated, not staggered, in the alternate method.

(3) Whenever possible, insulate splices from ground or other conductors by wrapping them with friction tape or other electric insulating tape.

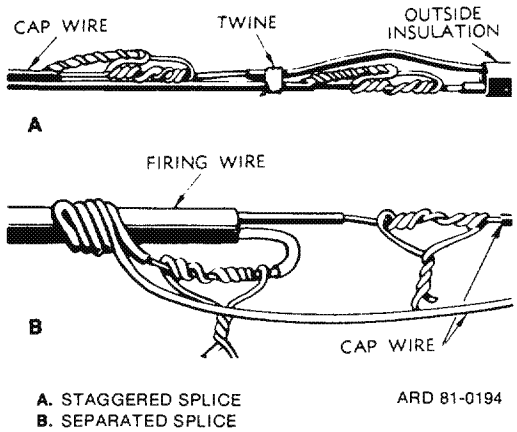

Figure 5-10. Splicing two pairs of wires.

(4) Circuit splices, not taped or insulated, should not lie on moist ground. Splices should be supported on rocks, blocks, or sticks so that only insulated portions of wires touch ground.

d. Common Series. This is used for connecting two or more charges fired electrically by a single blasting machine (fig. 5-11). A common series circuit is prepared by connecting one blasting cap lead wire from the first charge to one lead wire in the second charge and so on until only two end wires are free. Connecting wires (usually annunciator wire) are used when the distance between blasting caps is greater than the length of the usual cap lead wires.

5-10. PRIMING AND TESTING FIRING CIRCUIT

NOTE

At firing position, keep free ends of firing wire twisted together and grounded until ready to connect to galvanometer or to blasting machine.

a. Splice one of the free cap lead wires to a firing wire conductor.

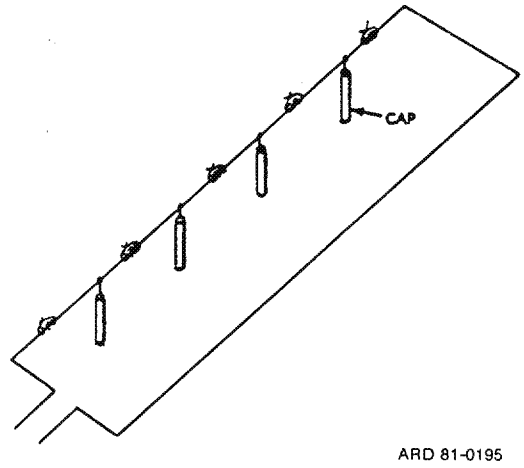

Figure 5-11. Common series circuit.

WARNING

•.INDUCED CURRENTS FROM RADIO FREQUENCY (RF) SOURCES CAN INITIATE BLASTING CAPS CONNECTED TO LONG LEAD OF WIRE. BEFORE CONNECTING ELECTRIC BLASTING CAPS TO THE FIRING WIRES, THE BLASTING CIRCUIT MUST BE TESTED FOR THE PRESENCE OF EXTRANEOUS ELECTRICITY AND RF ENERGY.

•.FACE AWAY FROM CAPS WHEN CIRCUIT IS COMPLETED TO MINIMIZE FACE INJURIES FROM ACCIDENTAL INITIATION. IF AT ALL POSSIBLE, MAINTAIN COVER BETWEEN BLASTING CAPS AND TESTING PERSONNEL.

b. Check for presence of RF energy and/ or extraneous electricity as follows:

(1) Arrange a dummy test circuit, essentially the same as the actual blasting circuit except that a No. 47 radio pilot lamp of known good quality inserted in place of the blasting cap shall be used without applying electric current to the circuit. Any glow of the radio pilot lamp, viewed in the darkness, is to be construed as evidence of the presence of possible dangerous amounts of RF energy, and/or extraneous electricity; blasting operations in such areas must be performed with nonelectric blasting caps and safety fuse.

ED_001691B_00007347

(2) The duPont Blaster's Multimeter Model 101 may be substituted for the No. 47 radio pilot lamp when testing for extraneous electricity, but will not detect RF energy. Distances prescribed in TM 9-1300-206 or DARCOMR 385-100 should be used as a guide in the selection of sites for electric blasting operations in the vicinity of RF energy transmitters.

c. Splice free end of cap lead wire to free end of firing wire.

WARNING
NEVER TRY TO FORCE A CAP INTO CAP WELL THAT IS TOO SMALL TO ADMIT THE CAP EASILY.

d. Priming will be accomplished by one of the following methods, determined by the type of explosive used.

(1) Charges having cap wells. Charges having cap wells (threaded or unthreaded) may be primed as follows:

(a) Use of blasting cap with priming adapter. The cap lead wires are passed through the slot of the adapter (fig. 5-12) and blasting cap is pulled into place in adapter. The cap and adapter are then inserted into cap well of the demolition charge and adapter is screwed into place.

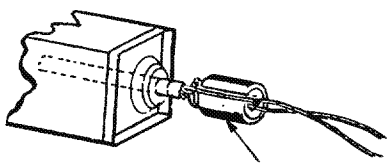

ARD 81-0196

Figure 5-12. Priming adapter.

(b) Use of blasting cap without priming adapter. When priming adapters are not available or demolition charge does not have a threaded cap well, cap is inserted in well and cap wires are tied around the charge by two-half hitches (fig. 5-13). As an alternate method, use tape to secure blasting cap to prevent blasting cap withdrawal.

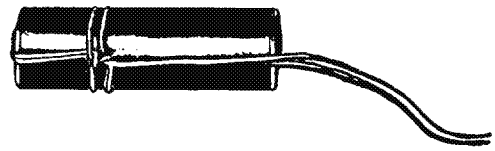

ARD 81-0197

Figure 5-13. Two half hitches.

(2) M1 chain demolition block. Tape an electric blasting cap to one of the free ends of the detonating cord chain. The explosive end of the cap will point toward the chain demolition block.

(3) Plastic explosives composition C. Plastic explosive charges not having cap wells will be primed by forming a cap well in the charge using the pointed leg of the M2 crimper and inserting blasting cap into the formed cap wells. Composition C-4 should then be molded around the blasting cap.

e. The firing circuit will be tested as follows (fig. 5-14).

(1) Ensure that all joints and bare sections are separated and placed out of contact with the ground and all other conductors.

(2) Hold one end of firing wire to one post of galvanometer and touch other end to other post.

(3) Circuit is complete if needle moves across scale. The amount of deflection of needle depends on length and type of firing wire and number of blasting caps in the firing circuit. If test indicates a break or high resistance, shunt the wires and then repair wire or connections. Caps will be retested if necessary.

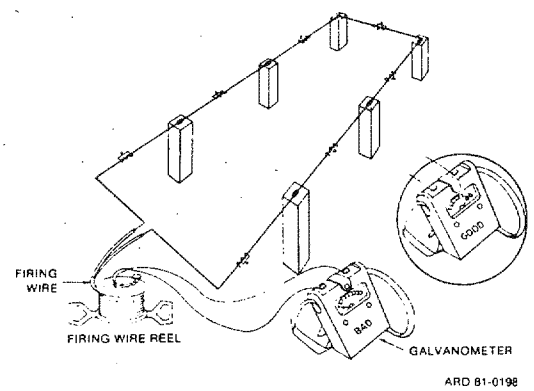

Figure 5-14. Testing firing circuit.

5-11. BLASTING MACHINE

The blasting machine will be test-operated, attached, and fired in accordance with the following:

a. Test operate the blasting machine by actuating several times with nothing attached to the terminals.

WARNING

DO NOT CONNECT THE BLASTING MACHINE TO THE FIRING WIRES UNTIL AILL PREFIRING TESTS HAVE BEEN COMPLETED AND UNTIL A SIGNAL IS RECEIVED FROM THE SUPERVISOR THAT THE AREA HAS BEEN CLEARED OF ALL PERSONNEL AND EQUIPMENT.

b. To prevent a misfire, ensure that the following have been accomplished prior to firing the blasting machine.

(1) All blasting caps are included in the firing circuit.

(2) All connections between blasting cap wires, connecting wires, and firing wires are properly made (par 5-10e).

(3) The number of blasting caps in any circuit does not exceed the rated capacity of the blasting machine being used.

c. Connect the blasting machine by untwisting the ends of the firing wire and fastening them to the two posts of the blasting machine.

d. Fire the blasting machine using one of the following methods (table 5-1):

(1) Ten-cap blasting machine:

(a) Insert hand through strap (if attached).

(b) Grasp the bottom of the blasting machine.

(c) Insert the handle.

(d) Twist vigorously.

(2) Fifty-cap blasting machine:

(a) Set machine squarely on a solid, level place and lift plunger by handle to its maximum extension.

(b) With body well balanced, feet wide apart, and in a partially stooped position, grasp handle firmly with both hands and push plunger down with a quick, hard stroke.

(3) M32 and M34 blasting machines:

(a) Release blasting machine handle by rotating O-ring with handle springs outward from body of machine.

(b) Hold machine in upright position (terminals up) in either hand so that the plunger end of handle rests under base of thumb and fingers grasp machine body.

(c) Squeeze hand sharply several times in succession until charge fires. Not more than four strokes should be required.

Table 5-1. Maximum Circuit Capacities of Various Power Sources

1	2	3	4	5	6	7	8	9	10
Circuit design	Total number of caps in circuit	Power source							
		10-cap blasting machine	30-cap blasting machine	50-cap blasting machine	1 ½ -kw portable generator 115-volt, 13 ½ amp	3-kw portable generator, 115-volt 26-amp	5-kw portable generator, 115-volt 43 ½ -amp	3-kw portable generator, 220-volt 13 ½ -amp	5-kw portable generator, 220-volt 22 ½ amp
		The circuits below are connected by one 500-foot standard two-conductor firing reel							
10 caps in continuous series.	10	X	X	X	X	X	X	X	X
30 caps in continuous series. series.	30	----	X	X	X	X	X	X	X
50 caps in continuous	50	----	----	X	----	----	----	X	X

5-12. USE OF DETONATING CORD

Detonating cord is used to initiate explosive charges as a component of an electric or nonelectric firing system. If the nonelectric firing system is being used with more than one charge, detonating cord is required to assure simultaneous firing. of the charges. Detonating cord is useable underground or underwater. The initiation of the detonating cord is accomplished by a blasting cap above ground or water.

5-13. SAFETY PRECAUTIONS FOR DETONATING CORD

In addition to the general safety requirements, the following precautions will be strictly adhered to when using detonating cord.

a. Avoid kinks and sharp bends.

b. Handle with special care to avoid breaking covering or explosive train.

c. Lay lines out as straight as possible but not stretched taut. Detonating cord forms a spiral as it is unwound from spool and must be' straightened out carefully before firing to avoid misfire.

d. Do not remove any part of outer covering.

e. When making branch line connections, ensure that detonating cords touch only at connections.

f. The angle formed by branch line and cap end of main line will not be less than 90 degrees from the direction in which the blast is coming. At a smaller angle, branch line may be blown off main line without being detonated.

5-14. DETONATING CORD CONNECTIONS

Detonating cord clips (fig. 5-15) or square knot pulled tight are used to splice the ends of detonating cord. The tongues of the clips are bent firmly over both strands and the connection is made secure by bending the trough end of the clip back over the tongue.

The preferred method of connecting the detonating cord is as follows:

a. Deleted.

b. Overlap the newly cut free ends by 18 inches.

c. Secure the cords together with detonating cord clips at least 6 inches from each end of the free ends and at least 6 inches from each other.

NOTE

The 6-inch overlap of each free end is to keep any moisture absorbed, after the splice is made, from affecting the overlap area between the two clips.

If a knot is used, at least a 15 centimeter (6 inch-lengths) should be left free at both sides (fig. 5-16). When fabric is used to cover the detonating cord, the fabric must not be removed. The knot may be placed in water or in the ground but the cord must be detonated from a dry end.

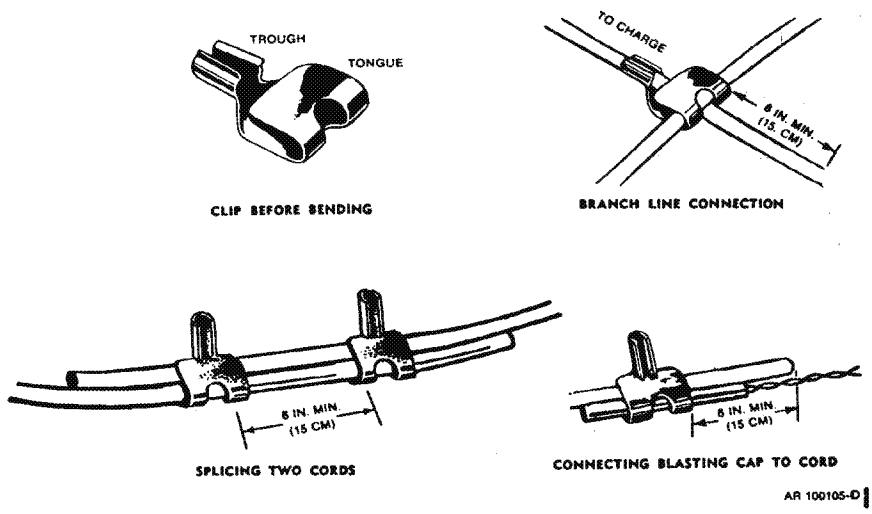

Figure 5-15. Connections using M1 detonating cord clip.

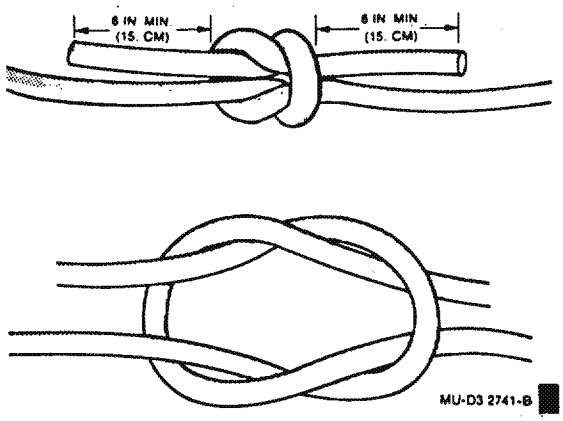

Figure 5-16. Square knot connections.

a. Branch Line Connections. A branch line is fastened to a main line by means of a clip (fig. 5-15) or a girth hitch with one extra turn (fig. 5-17). The branch line is clipped with the U-shaped trough of the clip and the main line with the tongue of the clip. The clip is bent against the cord, holding the connection securely. The angle formed by the branch line and the cap end of the main line should not be less than 900 from the direction from which the blast is coming; at a smaller angle, the branch line may be blown off the main line without being detonated. At least 15 centimeters (6 inches) of the running end of the branch line is left free beyond the tie. The running end of the girth hitch will be on the opposite side of branch line from initiating point on the main.

b. Ring Main. A ring main is made by bringing the main line back in the form of a loop and attaching it to itself with a girth hitch with one extra turn (fig. 5-18). This will detonate an almost unlimited number of charges. The ring main makes the detonation of all charges more positive because the detonating wave approaches the branch lines from both directions and the charges will be detonated even when there is a break in the ring main. Branch line connections should be made perpendicular to the ring main. Any number of branch lines may be connected to the ring main, but a branch line is never connected at a point where the ring main is spliced. In making detonating cord branch line connections, avoid crossing lines. However, if this is necessary, be sure to have at least 0.30 meters (one foot) of clearance at all points between the detonating cords; otherwise, the cords will cut each other and destroy the firing system.

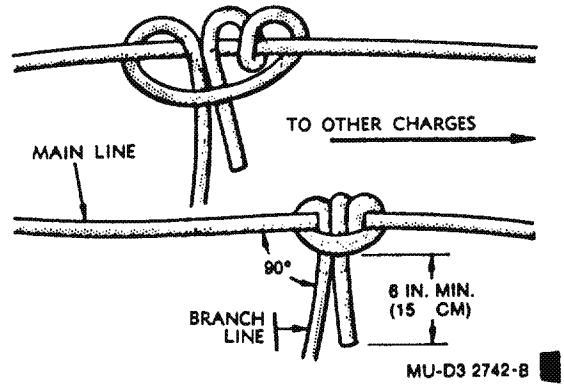

Figure 5-17. Girth hitch with one extra turn.

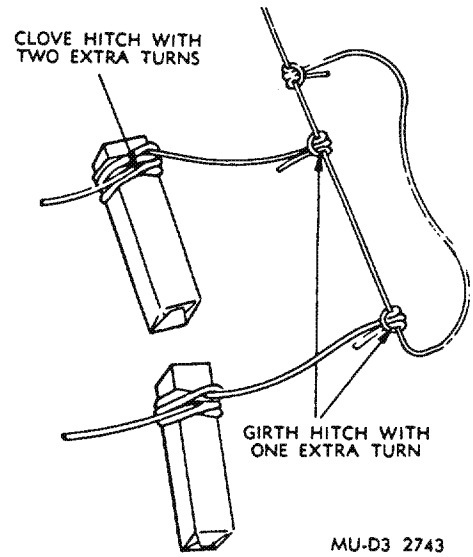

Figure 5-18. Ring main with branch lines.

c. Initiating Cap. The detonating cord main line is initiated by an electric blasting cap when an electric firing system is being used, or by a nonelectric blasting cap when a nonelectric firing system is being used. The blasting cap is firmly attached at least

15 centimeters (6 in.) from the free end of the detonating cord by numerous wraps of string or tape, or may be attached by an MI detonating cord clip (fig. 5-15).

d. Detonating Cord Connector (fig. 5-19). The connector may be used to connect detonating cord end to end or at right angles. The connector may also be used to fasten a blasting cap, either electric or nonelectric, to the detonating cord.

e. Electrical Tape (fig. 5-20). Electrical tape may be used to splice two lengths of detonating cord together and for attaching branch lines to the main line. When splicing two cords together, overlap the two ends about 0.5 meter (18 inches) and tape the center at least 0.15 meter (6 in.). Connect branch lines by taping at least 0.15 meter (6 in.) pigtail extending along the main line towards the source of initiation. Tape may also be used to connect an electric or nonelectric blasting cap to detonating cord as shown in figure 5-20.

5-15. CAPPING DETONATING CORD

When capping detonating cord with nonelectric blasting cap, the following procedures will be used.

a. Use cutting jaw of cap crimper M2 to cut detonating cord, or use a clean sharp blade. Cut detonating cord squarely across.

NOTE
Omit the following step if a priming adapter is not being used.

b. Pass end of detonating cord through adapter.

c. The method of handling and inspecting the nonelectric blasting cap and the procedure for crimping it to the detonating cord is the same as used for time blasting fuse. Follow paragraphs 5-4e to 5-4j for these operations.

5-16. PRIMING THE CHARGE

The charge may be primed by use of either a capped detonating cord or by wrapping it directly with noncapped detonating cord as follows:

a. Noncapped Detonating Cord (Method 1, fig. 5-21).

(1) Tie detonating cord securely around explosive by a clove hitch with two extra turns.

(2) Fit cord snugly against block and push loops close together.

b. Noncapped Detonating Cord (Method 2, fig. 5-21).

(1) Place loop of detonating cord on the block and wrap detonating cord four times around the block.

(2) Draw free end of detonating cord through loop and pull until tight.

c. Noncapped Detonating Cord (Method 3, fig. 5-21):

(1) Lay detonating cord at an angle across the block.

(2) Wrap running end three times over this cord and around block; at fourth turn slip running end under the three wraps and parallel with cord laid at angle and draw tight.

d. Capped Detonating Cord with Priming Adapter (fig. 5-6).

(1) Pull cap into adapter and insert into cap well of explosive.

(2) Screw adapter in place.

5-17. DUAL FIRING SYSTEMS

Dual firing systems should be used whenever possible to increase the probability of successful firing. Two complete and independent firing systems are used, each capable of firing the same charge. There may be two electric circuits, two nonelectric circuits, or a combination electric and nonelectric system.

ED_001691B_00007347

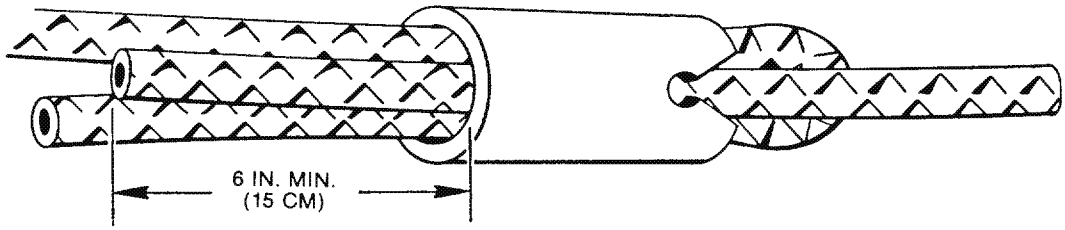

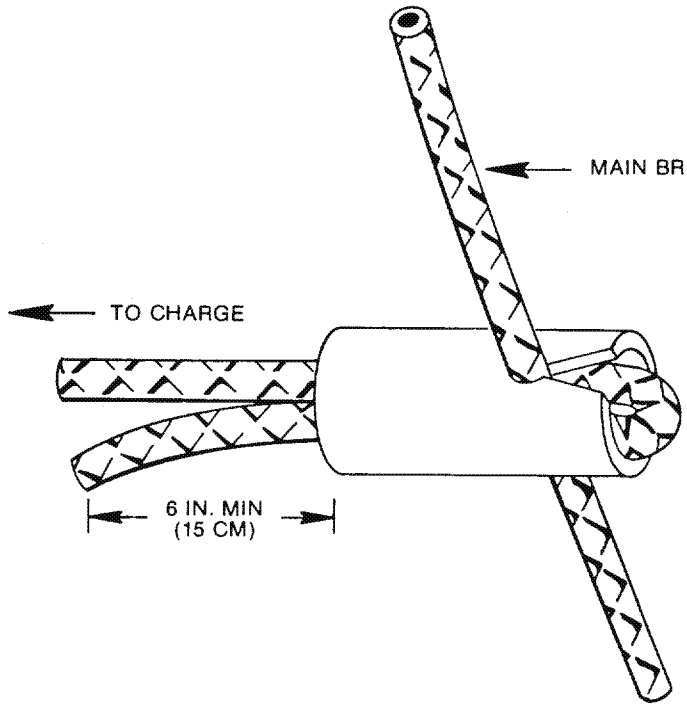

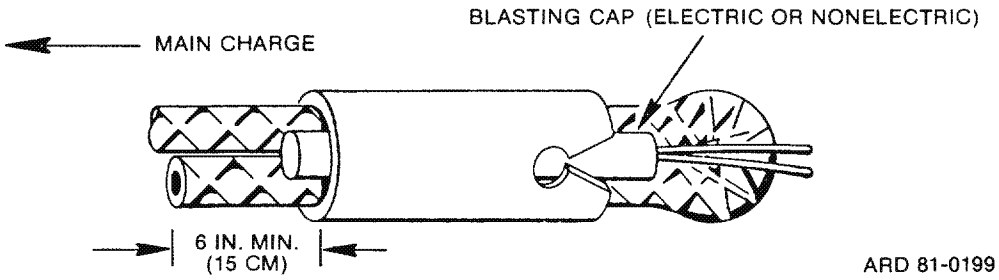

Figure 5-19. Detonating cord connector.

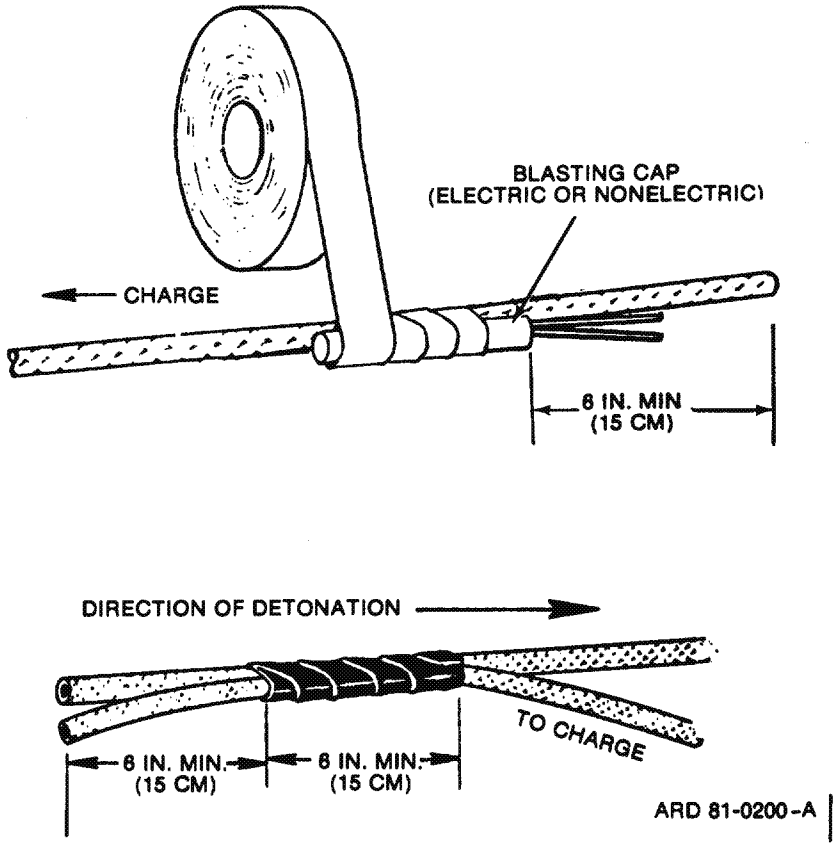

Figure 5-20. Electrical tape splicing.

5-18. DUAL NONELECTRIC FIRING SYSTEM

This consists of two independent nonelectric systems for firing a single charge or set of charges. Figure 5-22 shows the layout for nonelectric dual firing system for a single charge. If two or more charges are to be fired simultaneously, two detonating cord ring mains (fig. 5-23) are laid out, and a branch line from each charge is tied into each ring main. Additional reliability can be obtained from dualdetonating cord-primed firing systems by extending the cap ends of the lead-in detonating cords, as shown in figure 5-23 and tying them together in a square knot (girth hitch with one extra turn), or by connecting the cord with detonating cord clips.

5-19. DUAL ELECTRIC FIRING SYSTEM

This consists of two independent electric circuits, each with an electric blasting cap in each charge, so that the firing of either circuit will detonate all charges (fig. 5-24)

5-20. COMBINATION DUAL FIRING SYSTEM

The combination dual firing system uses an electric and nonelectric firing system (fig. 5-25). Each charge is primed electrically and nonelectrically. Both the electric and nonelectric systems must be entirely independent of each other. The nonelectric system must be fired first.

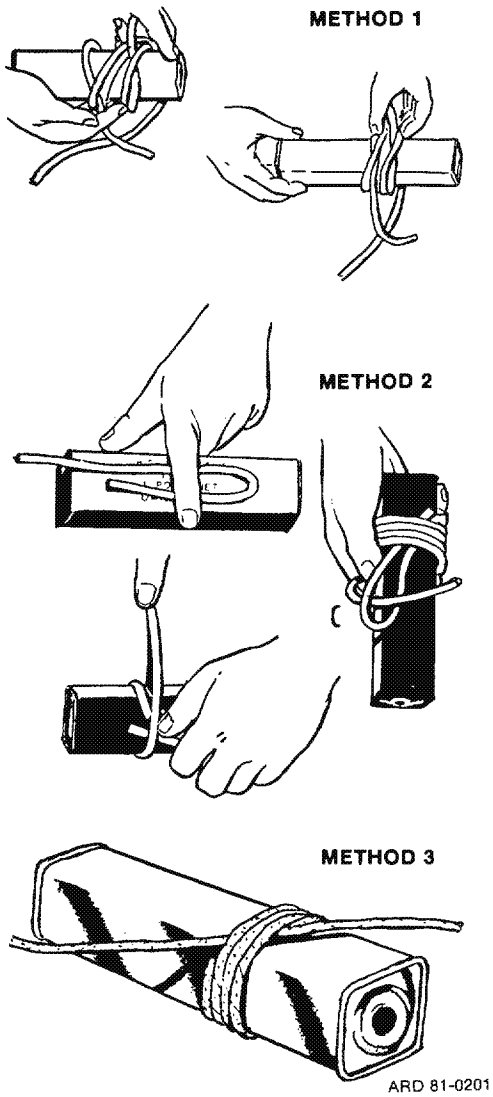

Figure 5-21. Detonating cord priming methods.

5-21. DUAL ELECTRIC PRIMING SYSTEM

Dual electric priming should be used when dual electric firing systems are not used. This consists of one electric firing wire with two electric blasting caps connected in parallel (fig. 5-26).

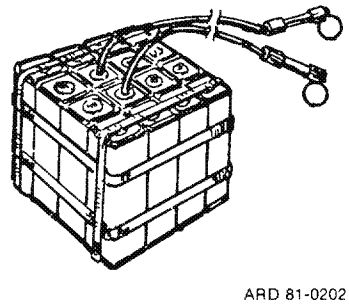

Figure 5-22. Nonelectric dual firing system for a single charge.

5-22. IGNITION TRAINS

An ignition train will be used in pit, trench, or surface burning operations to allow personnel sufficient time to reach a safe distance prior to combustion of munitions being disposed of. A nonelectric ignition train consists of a fuse igniter, time blasting fuse, and a small bag of smokeless powder. An electrical ignition train consists of a blasting machine, firing wire, flashvented squib, and a small bag of srokeless powder which may be purchased locally in cne-pound cans, NSN 1375-00772-1369 or 1370. Official nomenclature is Powder, rifle, smokeless, Class 1.3C.

5-23. PREPARATION OF IGNITION TRAINS

Ignition trains will be prepared as follows:

WARNING

DISASSEMBLY OF MUNITIONS ITEMS TO OBTAIN PROPELLANT IS UNAUTHORIZED.

a. Nonelectric.

(1) The method of preparing and testing the time blasting fuse is the same as in the assembly of nonelectric firing system. Follow paragraphs 5-4a, b, and c.

(2) Attach M60 fuse igniter to one end of fuse.

(3) Split other end of time blasting fuse and insert into a small plastic bag of smokeless powder, approximately one ounce (fig 5-27)

(4) Secure bag to time blasting fuse with tape.

(5) Insert plastic bag of propellant into combustible material.

(6) Ignite fuse.

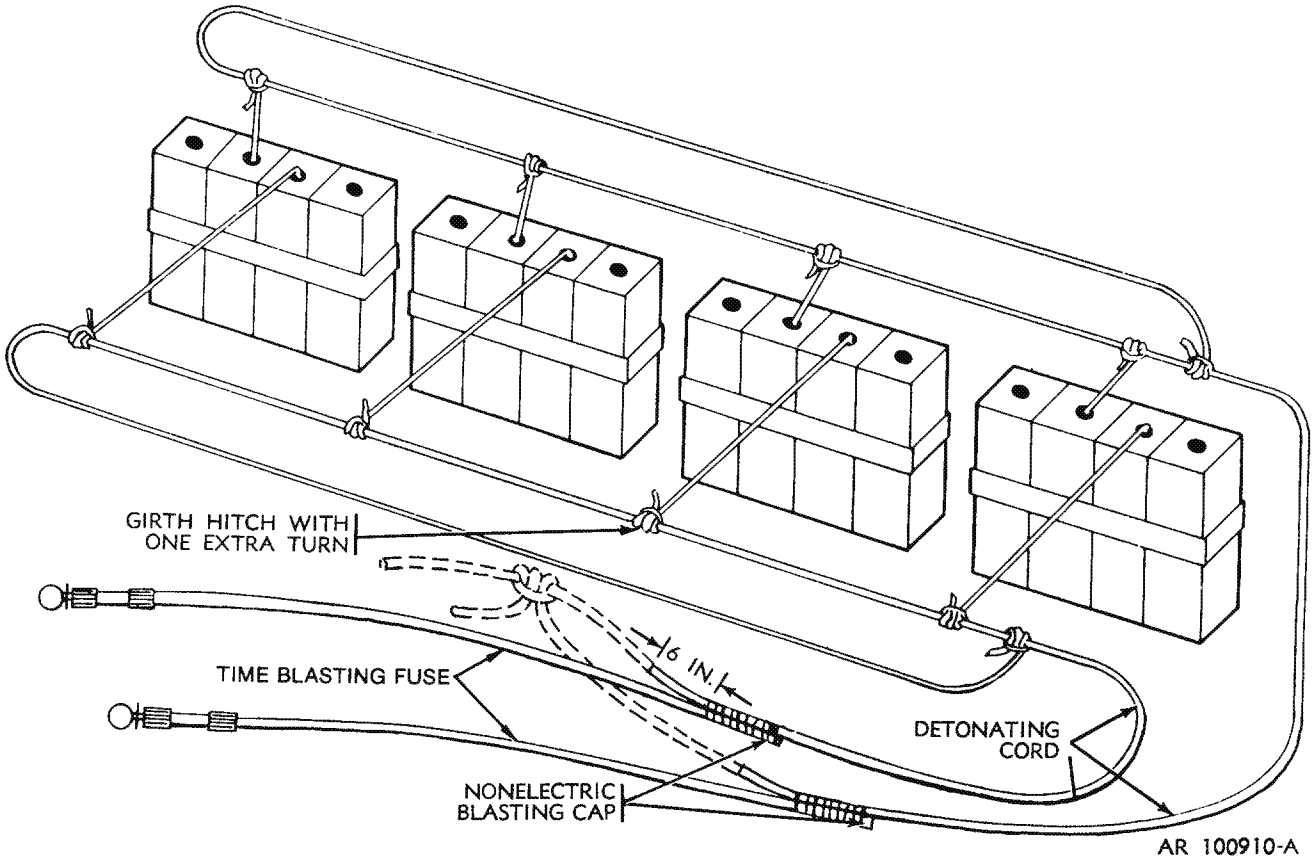

Figure 5-23. Dual nonelectric firing system with dual detonating cord priming.

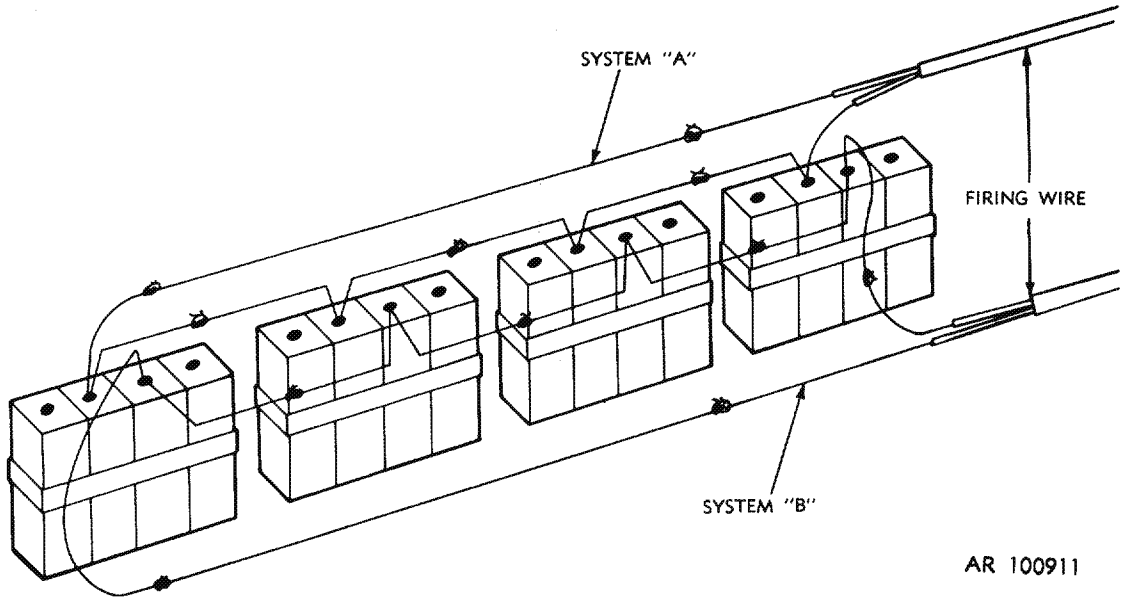

Figure 5-24. Dual electric firing system.

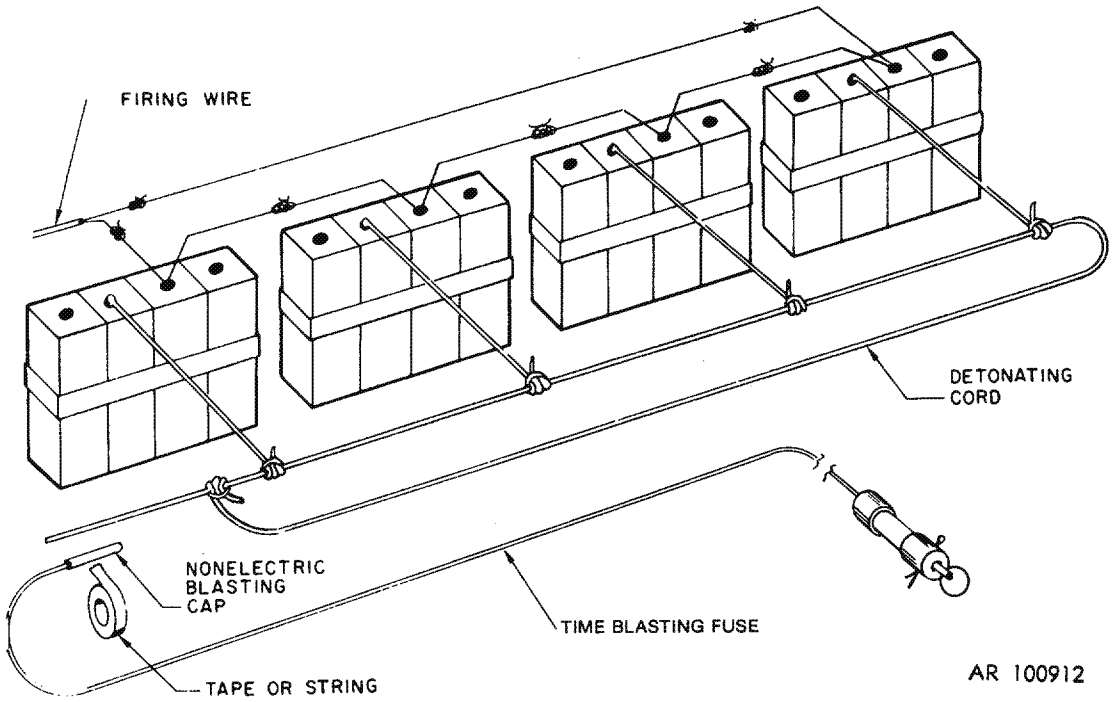

Figure 5-25. Combination dual firing system.

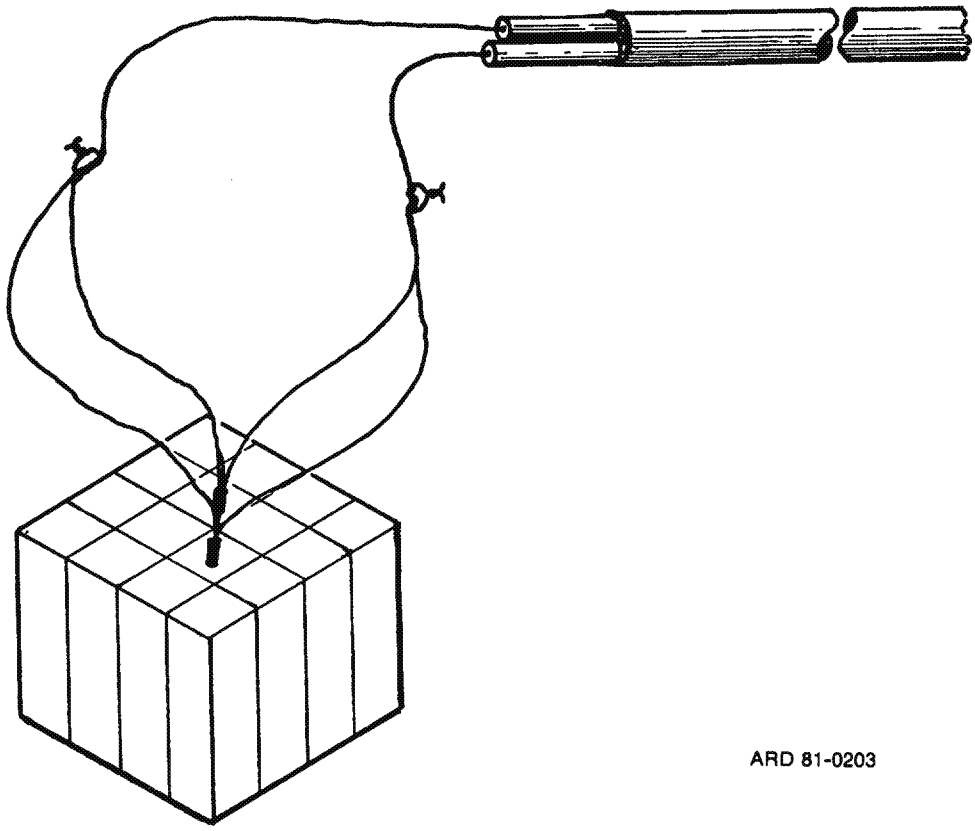

Figure 5-26. Dual electric priming system.

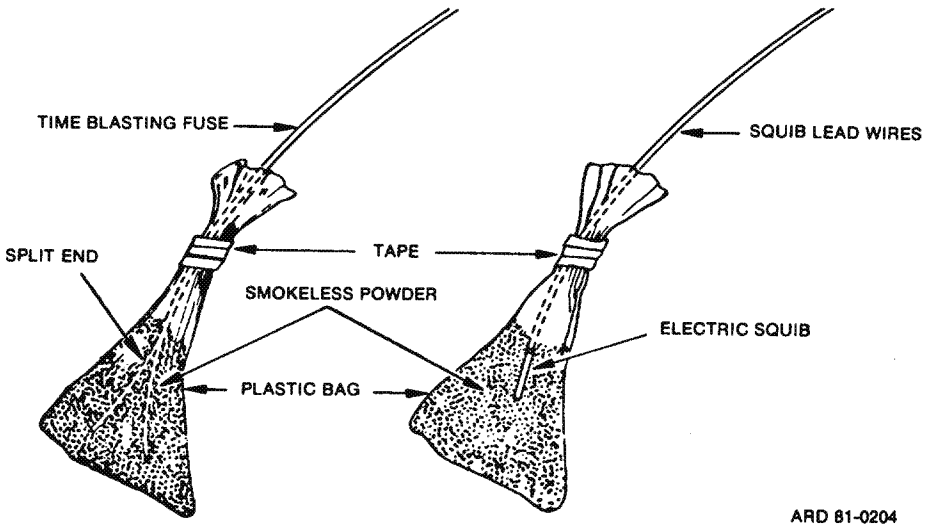

Figure 5-27. Plastic bag of smokeless powder.

b. Electric.

NOTE

- **When preparing and using an electric ignition train, all applicable safety precautions in paragraph 5-7 will be observed.**

- **Squibs and firing wiring will be tested prior to preparation of the ignition train; squibs in the same manner as electric blasting caps in paragraph 5-8b; firing wire in accordance with paragraph 5-8c.**

(1) Attach M1 flash-vented squib lead wire to firing wire.

(2) Secure bag to squib by taping top of bag to squib lead wires.

(3) Insert bag into combustible material in pit.

(4) Attach firing wire to blasting machine and operate in accordance with paragraph 5-11.

5-24. MISFIRES

WARNING

WAIT AT LEAST 30 MINUTES AFTER EXPECTED DETONATION OR IGNITION BEFORE APPROACHING ANY MISFIRE. IF IT CAN BE POSITIVELY ASCERTAINED THAT THE FAILURE IS STRICTLY ELECTRICAL IN NATURE, AND IT IS POSITIVELY KNOWN THAT THE EXPLOSIVES ARE NOT BURNING, CORRECTIVE ACTION MAY BE TAKEN IMMEDIATELY.

NOTE

The above warning applies to all nonelectric firing systems, all dual systems (figs. 5-23, 5-24, 5-25, and 5-26), and to detonating cord primed with nonelectric blasting caps. An exception is made only for single electrical firing systems (one firing circuit) and single detonating cord firing systems primed with an electric blasting cap.

WARNING

A MISFIRE WILL BE APPROACHED BY THE PERSON IN CHARGE, OR WHO HAS THE MOST KNOWLEDGE OF THE FIRING SYSTEM INVOLVED. A SECOND PERSON WILL ACT AS A SAFETY BACKUP.

A misfire may occur in spite of all precautions. Therefore, working on or near a misfire is the most hazardous of all disposal operations. One qualified person will examine the misfire with a second qualified person acting as a safety backup. The safety backup will stay clear of the immediate danger area. He will utilize natural barriers or obstructions for protection, but remain in a position to observe the actions of the person examining the misfire. He will be prepared to go to the aid of the person examining the misfire if an accident should occur.

5-25. PREVENTION OF NONELECTRIC MISFIRES

All safety precautions will be followed In addition, the probability of a misfire may be reduced if the following procedures are adhered to:

a. Prepare all initiators properly, ensuring use of proper blasting cap.

b. Place charges carefully.

c. Place initiator properly.

d. Perform any tamping operation with care to avoid damage to an otherwise carefully prepared charge.

e. Ensure time blasting fuse is ignited prior to withdrawing.

f. Fire charge according to proper technique.

g. If possible, a dual firing system will be used. If both initiators are properly assembled, the possibility of a misfire is reduced to a minimum.

5-26. HANDLING NONELECTRIC MISFIRES

Nonelectric misfires will be handled as follows:

a. Nonelectric Blasting Cap Misfire.

(1) Allow a minimum of 30 minutes after expected detonation before starting investigation.

ED_001691B_00007347

WARNING

UPON REACHING THE MISFIRED CHARGE, IMMEDIATELY REMOVE THE FAILED DETONATOR/ INITIATOR.

(2) Insert a new fused detonator/ initiator into the charge. Destroy the failed components by placing them along side the newly primed charge. If this is not practical, place a new charge next to the misfired charge and prime as required.

b. Detonating Cord Misfire.

(1) Allow a minimum of 30 minutes after expected detonation before starting investigation, except if initiating blasting cap is electric.

WARNING

UPON REACHING THE MISFIRED CHARGE, IMMEDIATELY REMOVE THE MALFUNCTIONED BLASTING CAP FROM THE DETONATING CORD.

(2) Attach a new initiating blasting cap to detonating cord, taking care to fasten properly. Place failed blasting cap on or near the newly primed charge to ensure destruction.

(3) If detonating cord still fails, remove earth cover and reprime explosive charge with new detonating cord. Failed detonating cord will be disposed of by placing in the pit. Replace earth cover.

c. Explosive Charge Misfire. After determining in accordance with paragraphs a and b above that blasting cap and/or detonating cord are satisfactory, replace failed explosive charge as follows:

(1) Allow a minimum of 30 minutes after expected detonation before starting investigation, except if initiating blasting cap is electric and if it is positively known that the charge is not burning.

(2) Replace charge as follows:

(a) If failed charge has not been buried, place a new charge (counter-charge) at the side of the failed charge and prime as before.

(b) If failed charge has been covered with earth, carefully remove earth cover with a wooden or nonmetallic tool. Avoid accidental digging into the charge. When the earth has been removed within one foot, place a new 1 to 1-1/2 kilograms (2 to 3 pounds) charge over the failed charge and prime as before.

5-27. PREVENTION OF ELECTRIC MISFIRES

All safety precautions will be followed. In addition, the probability of a misfire may be reduced if the following procedures are adhered to:

a. Ensure use of proper blasting cap.

b. All blasting caps are included in firing circuit.

c. All connections between blasting cap wires, connecting wires, and firing wires are properly made.

d. Short circuits and grounds are avoided.

e. The number of blasting caps in any circuit does not exceed the rated capacity of blasting machine being used.

f. A dual electric firing system should be used or all charges should be dual primed.

5-28. HANDLING ELECTRIC MISFIRES

Electric misfires will be handled as follows:

WARNING

WAIT AT LEAST 30 MINUTES AFTER EXPECTED DETONATION OR IGNITION BEFORE APPROACHING ANY MISFIRE. IF IT CAN BE POSITIVELY ASCERTAINED THAT THE FAILURE IS STRICTLY ELECTRICAL IN NATURE, AND IT IS POSITIVELY KNOWN THAT THE EXPLOSIVES ARE NOT BURNING, CORRECTIVE ACTION MAY BE TAKEN IMMEDIATELY.

a. Check firing wire connections to blasting machine terminals to be sure that contacts are good.

b. Make two or three more attempts to fire the circuits.

c. Disconnect blasting machine and check firing wire for continuity. If continuity exists, attempt to fire again using another blasting machine. If con-

tinuity does not exist, or the second blasting machine does not fire the circuits, proceed to subparagraph d.

d. Shunt firing wire.

e. Check entire circuit, including firing wire, for breaks and short circuits.

f. If no continuity exists in the blasting cap, disconnect the old blasting cap wires and shunt. Do not disturb blasting cap.

g. Connect the wires of the new blasting cap to the firing circuit and reprime.

ED_001691B_00007347

CHAPTER 6

EXISTING DEMILITARIZATION EQUIPMENT AND METHODS

6-1. GENERAL

a. Current conventional munition demilitarization processes have been standardized and use the same type of equipment everywhere. The four major methods for demilitarization are: washout/steamout, deactivation furnace, open burning, and open detonation. The above methods may require disassembly of some components prior to processing by one of the four major methods listed above.

b. Current facilities and capabilities-in terms of locations, capacity, equipment, and techniques will be further described in this chapter.

c. Detonation capabilities, both above and below ground, will be identified by location.

6-2. MUNITION DISASSEMBLY LINES

a. The first step in most demilitarization/disposal operation is the disassembly of munitions into components suitable for ultimate disposal. Fixed artillery ammunition, for example, will have the projectile pulled out of the cartridge case in a special Jig, the propellant powder dumped into a collection bin, and the primer removed from the cartridge case. The projectile will have the fuze, the supplemental charge, and the fuze well liner removed to expose the explosive fill for removal. 30/50 caliber machine gun ammunition will be separated from the purely mechanical belt hardware. 20mm ammunition will usually, but not always, have the projectile pulled, the powder dumped, and the projectiles and cases collected in separate bins; whereas, smaller ammunition is usually left intact. Bombs, mines, and other large munitions will have the explosive fill exposed in much the same manner as large ammunition.

b. The above operations are typically carried out more or less remotely on automated disassembly lines designed especially for the specific munition. Fixed artillery ammunition, for example, will be placed by hand into a Vertical Pull Apart Machine (APE 1001 or APE 2000) located behind a safety shield, where it is clamped firmly into place. The machine separates the projectile from the cartridge case. The free projectile is placed (usually by hand) into another clamping machine where jaws grip and unscrew the fuze. Fuzes go down one conveyor, defuzed projectiles down another, empty cartridge cases down still another; and the dumped propellant powder is collected into a hopper by vacuum. It is the reverse of an assembly line.

c. The disassembly of smaller ammunition, such as 20mm, is even more automated. Complete rounds are fed by a conveyor belt, behind a safety shield, to a breakoff wedge where the projectile is forced out of the cartridge case. The projectile drops onto a second conveyor which takes it to a collection bin. The cartridge cases drop into a tumbling barrel where the propellant powder is shaken out and collected in a vacuum system. The cases finally drop into a third conveyor which takes them to another collection bin.

6-3. APE DISASSEMBLY EQUIPMENT

The equipment components, as used on disassembly lines, are of a special design identified as Ammunition Peculiar Equipment (APE). They are listed and described in detail in TM 43-0001-47, Army Equipment Data Sheets Ammunition Peculiar Equipment, October 1979. Examples of APE used to disassemble fixed artillery munitions are:

a. Vertical Pull Apart Machine (APE 10017, with proper accessories, is designed to pull apart fixed munitions 40 through 106mm at a production rate of 2 rounds per minute. The machine can be used to pull apart Navy ammunition; however, accessories would have to be designed and tested.

b. Vertical Pull Apart Machine (automated, APE 2000) is a rotary machine with cam operated mechanical drive to pull the rounds. It is equipped with a pickoff mechanism to automatically remove the pulled projectile from the machine and deposit it on a discharge

conveyor. The machine has its own shield for protection of the operators. The drive has a variable speed control which provides a production of 4 to 10 rounds per minute. Accessories can be designed for this machine to pull apart Navy munitions.

c. The two Spindle Defuzing Machine (APE-1002) is designed to remove the fuze, either base or point detonating, and tracer from the projectile when the disassembly torque exceeds the assembly torque or the operation is considered hazardous. Accessories are availabile to perform this work on all projectiles within the Army inventory and accessories can be designed to accommodate Navy munitions.

d. The Rocket Disassembly Machine (APE 1215) is used to disassemble the 3.5 inch rocket. The machine will separate the 3.5 inch component at any point required by making the required jaw adjustments. Complete disassembly will produce four components: the motor, fuze, detonator, and the warhead. The machine is capable of disassembling the 66mm LAW Rocket and accessories are available for this round.

e. The Vertical Disassembly Machine (APE 1227) is designed and used to remove the boom assembly from the Cartridge, 90mm: Practice, M371 and Heat, M371A1.

f. The Automatic Deprime Machine (APE 1229) is designed to remove screw or press type primers from cartridge cases ranging in size from 40mm through 106mm (except 105mm cartridge cases with the M80, M83, and M86 primers). The accessories for deprime of Navy munitions, up to the Navy 5-inch cartridge case, have been designed and are available. A machine for depriming the 105mm cartridge cases with the M80, M83, M86 primer, and all large Navy cartridge cases is presently under development.

g. The Debanding Machine (APE 1042) is for removal of the rotating banding from 57 through 120mm projectiles.

h. Debanding Machine (APE 1208) is a high production machine and should be used in place of the APE 1042 when it is available. This machine can be designed, together with accessories, to remove the rotating band from Navy munitions.

i. The Large Item Debanding Machine (APE 1212) has been designed to remove the rotating band from 155mm through 280mm projectiles. Although the production is low, economic analysis has proven that the sale of gilding metal acquired from the large projectiles will amortize the operation.

j. The Hand Grenade Defuzing Machine (APE 1202 or APE 2156) with proper accessories can be used to remove the fuze from all hand grenades within the Army inventory.

k. Fuze Disassembly Machine (APE 1118) is designed to remove the booster assembly from the fuze and/or the booster cup from the booster body. By separating the booster cup from the booster housing, the booster can be processed through the Deactivation Furnace at a high production rate. Shearing of the booster on the fuze, however, will also produce an item that can be processed in the furnace at a high rate. This shearing operation will produce approximately twice the production rate of the APE 1118, requiring only one operation.

l. The Vertical Disassembly Machine (APE 1153) is designed to remove fuzes and fin assemblies from mortars and projectiles. This is a low production machine, single station, remotely controlled, and it is the only machine available for removal of the fin assembly from mortars.

6-4. WASHOUT OF EXPLOSIVE FILLERS

Washout by APE 1300 Ammunition Washout and Reclamation System:

a. The Washout Plant is a standard APE item designed and specified in detail, by the U.S. Army Directorate for Ammunition Equipment (D/AE) located at Tooele Army Depot. It usually consists of a 4500 square foot building (all of whose details are included in the specifications) containing a water heater, wash racks, explosive reclamation and packaging sections, and water reclamation facilities. Basically, hot water is injected under -90 psi pressure into the cavity of an opened and up-ended projectile or bomb, melting out the fill and washing the metal case clean (figs. 6-1 through 6-3).

b. In operation, ammunition items

are placed vertically and open end down in holding racks. Hot water is jetted up into them at 90125 psi to melt and wash out the explosive fill. The hot water is held at approximately 1800-2050F, a temperature which melts the TNT. Much higher temperatures would clog the flumes and filters. The molten TNT-water slurry is fed to a settling tank where most of the water is separated for reuse. The molten explosive is pelletized by showering dropplets forced through a perforated plate and through ambient cold water. The solidified pellets are collected, dried, and boxed for storage or shipment. The production rate of the standard APE 1300 system is approximately 1400 pounds per hour of explosives, limited mainly by the capacity of the pelletizing unit. A modified washout system at Hawthorne AAP equipped with a belt flaker has an estimated capacity of 2000 pounds per hour.

c. Recycled water is chilled to remove excess dissolved explosive, filtered and sent to a holding tank for return feed to the heating units. Ordinarily, no water is discharged from a washout plant while it is running (although some do feature an overflow equal in volume to the volume of explosive washed out). Instead, the water is continuously recycled to the washout section after being chilled and filtered to remove excess dissolved and suspended explosive. When a plant is shut down, the water inventory maybe discharged to some disposal system or filtered through a carbon column for purification. It is planned to equip washout plants with carbon absorption columns for final treatment of discharged water.

d. Empty metal munition cases are flashed at the burning ground or in a flashing furnace to remove any remaining traces of explosive, and then sent to Property Disposal Office for disposal. Occasionally, when the cases are needed for reloading, they may be chemically cleaned to avoid heat warpage. This procedure, however, is unusual.

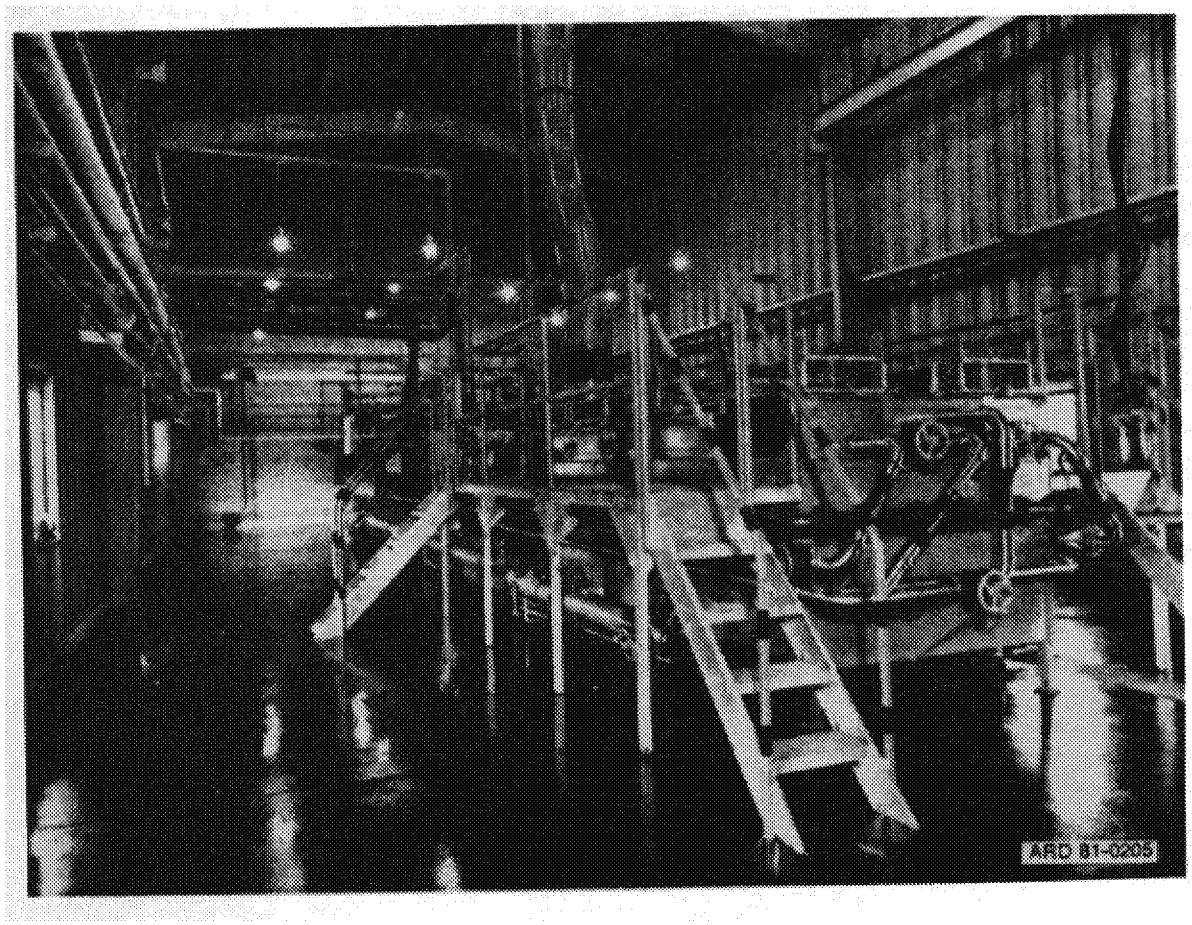

Figure 6-1. Washout room (APE 1300).

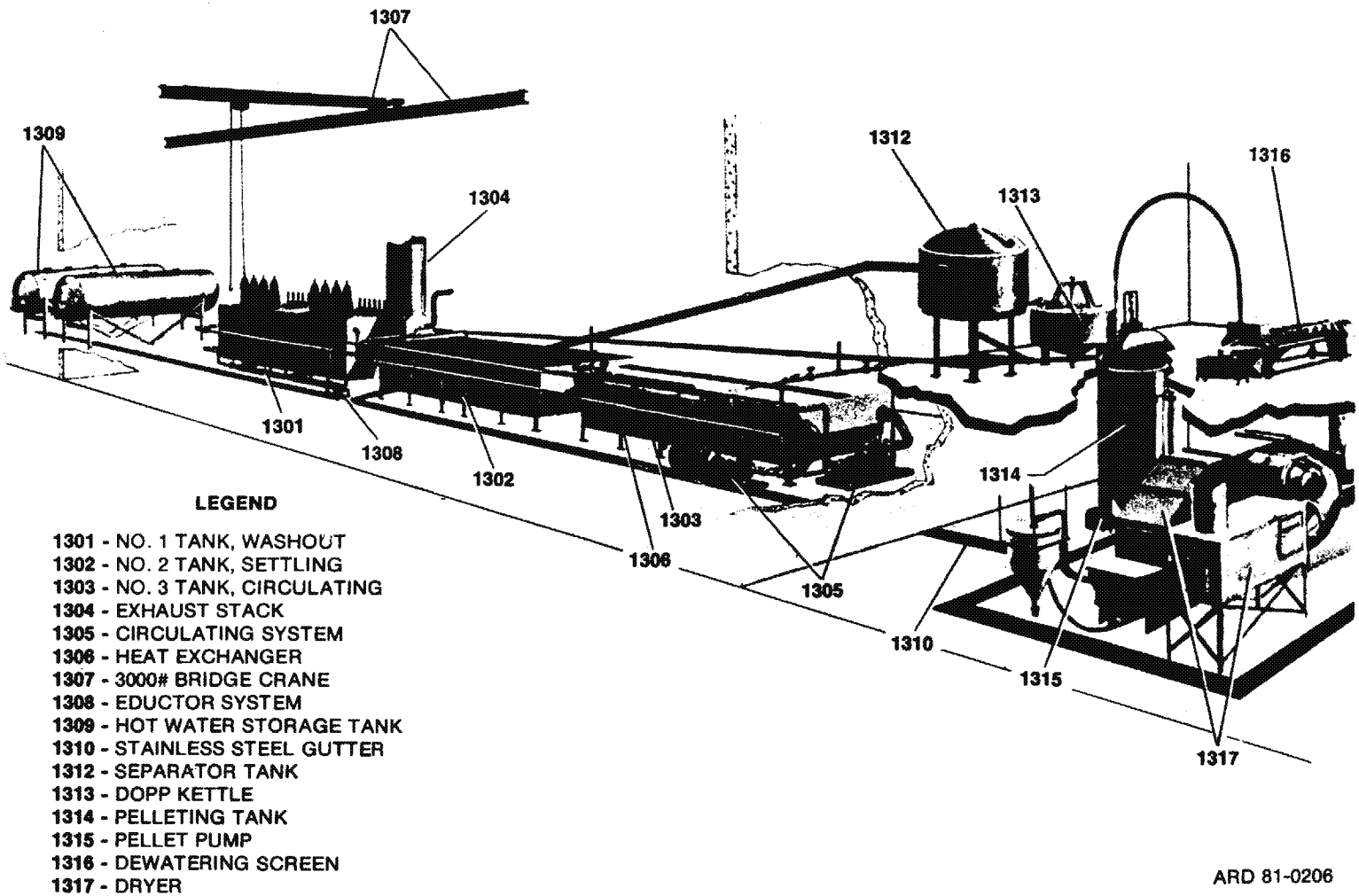

Figure 6-2. APE 1300 explosive washout plant - schematic diagram

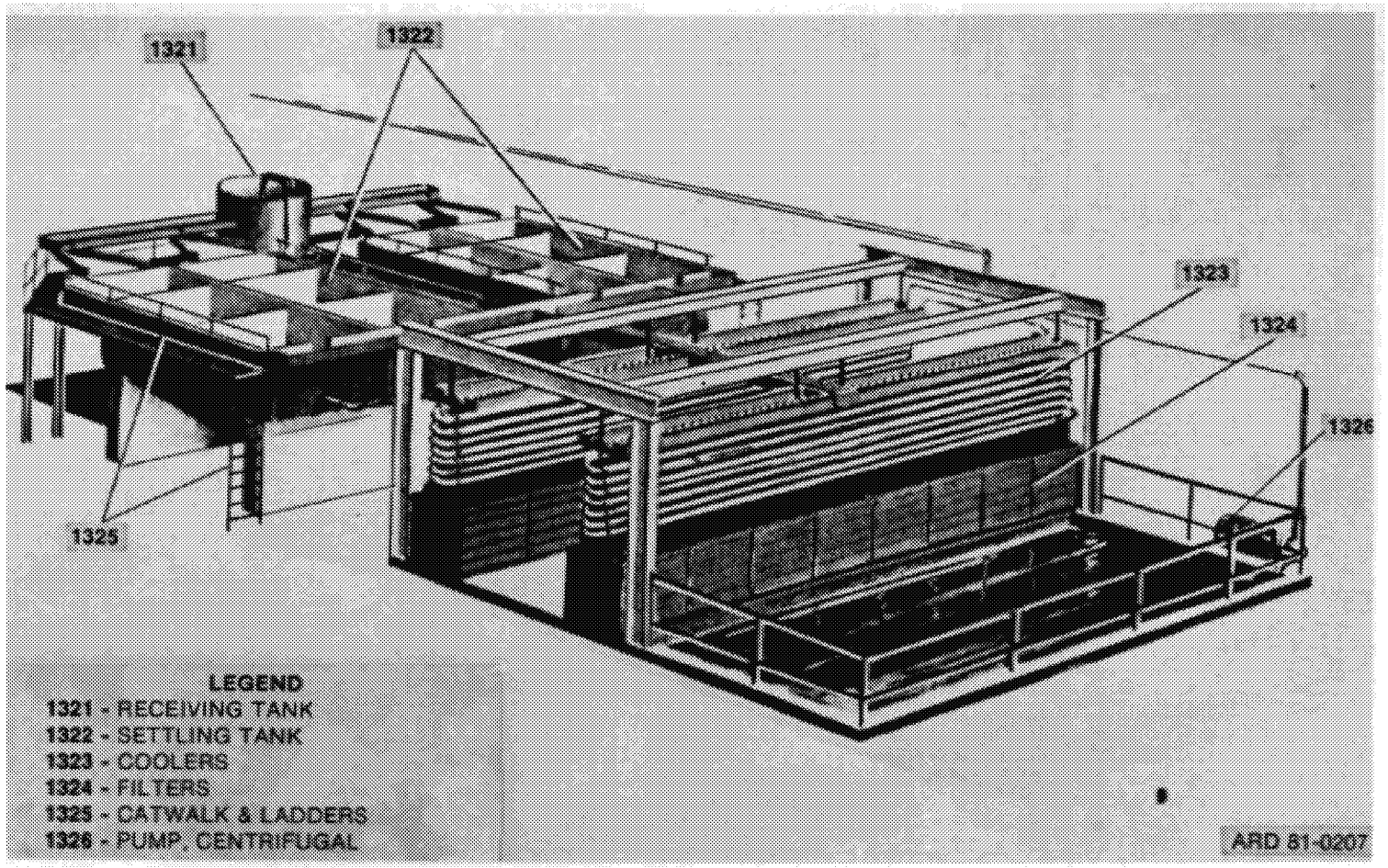

Figure 6-3. APE 1300 explosive washout plant - water reclamation system

e. Loaded filter batts and unreclaimable dregs from the explosives settling tanks are disposed of by Burning, either on a burning ground or in a suitable incinerator.

f. The APF 1300 Washout System has been designed for explosive fills of TNT, Comp B (TNT-BDX), and Tritonal (TNT-A1). TNT, Comp B, and Tritonal have been successfully pelletized.

g. Most of the APE 1300 Washout plants are in layaway for lack of workload. The older ones are being modernized by the addition of such refinements as W-bottom tanks to handle Comp E, twin settling tank eductors and water-flushed. pump seals. Plants are expected to be equipped eventually with carbon column final water filters prior to being placed in operation.

h. The APE 1300 System is described in detail in an Army Technical Manual, "Operation and Maintenance-Ammunition Explosives Washout and Reclamation System -APE 1300 Revision No. 2, 1 February 1974." Air pollution is discussed in Ch. III.

6-5. HIGH PRESSURE WASHOUT AND RECLAMATION SYSTEM

a. High pressure washout may be used on large projectiles, bombs, and rocket motors. High pressure washout- also called hogout - is not widely used. There are at least two operational facilities and there are others either in layaway or under reconstruction. This technique has been applied more to the removal of propellant from large rocket motors than to the removal of explosive fills from projectiles. The most illustrative example was at Crane AAA for the removal of HE from 3-inch to 6-inch projectiles.

b. In the Crane process, a defused 5-inch (for example) projectile is clamped into an approximately horizontal cradle, and a water lance penetrates into the cavil.> as the fill is washed out by a 9000 psi axial water jet. Afterwards, the partially washed-out projectile its moved to a second station, identical to the first, except that the lance has to lateral jets instead of an axial jet; this washes out the fill adhering to the sides of the projectile, At both stations, the projectile is rotated during washing.

c. The drained water goes through a hydrosieve and a clarifier, then to a clearwell for recycle back to the pump. The ejected, granular , explosive/water slurry is collected in a fume and poured into lined boxes. It is sold drained but wet (about 15% water) without further processing for commercial purposes. The empty cases are than flashed or burned out to remove residual explosive or propellant. It is recommended that all reclaimed or scrap material be inspected for explosives/contamination prior to reuse or transfer to the Defense Property Disposal Officer or to Inert Storage Area. Certification or scrap metal should be made in accordance with DOD 4160.21-M-1.

d. Another hogout facility is operated at NOS Indian Head at ~ 5000 psi for the removal of propellant from rocket and missile motors.

6-6. STEAMOUT OF EXPLOSIVE FILLERS

a. Steamout is an alternate method of removing explosive fillers. Steamout is similar to hot water washout in that both processes essentially melt out: TNT fillers from large-caliber projectiles, bombs, and other munitions. There are two important differences: Steamout is pretty well limited to TNT-only fillers since it lacks the erosive action of the pressurized jetting tot water. There is less water to dispose of from steamout than washout.

b. The steamout process at. Crane AAA handles large items such as 250 to 1000 pound bombs, mines, depth charges torpedo warheads, and smaller items such as 5-inch and 120mm shells. The large items are placed on an inclined cradle, and 5 to 15 psi steam is jetted, in to melt out the fill. Two lances are used, the first with an axial jet and a second with side jets. The molten slurry is collected in a jacketed pipe header with rubber connectors, flows to an agitated kettle, and thence to corrugated cooling pans. The pans are held in a vented and heated hood until the water is all evaporated, and are then cooled to allow, the explosive to solidify. The solidified explosive is broken into chunks, then boxed and shipped out. The empty metal case is steamed again on a vertical cradle to remove any remaining explosive as, well as the asphalt liner, if there is one. The sludge from this final steaming is burned. It is recommended that all reclaimed or scrap material be inspected for explosives/

contamination prior to reuse or transfer to the Defense Property Disposal Officer or to Inert Storage Area. Certification of scrap metal should be made in accordance with DOD 4160.21-M-1.

c. This facility also has a number of steam cabinets for 5-inch and smaller items. These items are placed vertically, open-end down on racks in the cabinet, and surrounded with steam until the explosive melts and runs out. There are no jets into the munitions.

d. There is minimal water discharge from this facility. Most of the steam condensate evaporates from the corrugated pans. The discharge is mostly washdown. There is a major problem in that TNT steam distills overhead and deposits TNT in the overhead ductwork which/must be manually cleaned periodically.

e. The explosives removal mechanism relies primarily upon the melting action of the hot steam, and there is little or no erosive action. Consequently, the process is best for TNT and less effective for fills with a high percentage of non-meltable components such as RDX, HMX, or aluminum. The process is superior for TNT because the steam vapor expands to fill even the most irregular cavity and gives better heat transfer than hot water which must be in direct contact with the explosive in order to melt it. It has another advantage in that the only wastewater it steam condensate, and that is evaporated in the dewatering step, so that there is minimal wastewater disposal problem. However, this is a time-consuming, manual process.

f. It should also be noted that, in spite of the feeling that steamout is effectively limited to TNT fills, Crane AAA has successfully applied it to H-6, Tritonal, and HBX. Nevertheless, a study done by Battelle for the Western Demilitarization Facility recommended that it be considered mainly for TNT filler.

g. Although it cannot be considered a widely used process, there are steamout facilities at Hawthorne AAP, McAlester AAP, NWS Yorktown, NTS Keyport, Joliet AAP, Cornhusker AAP, Newport AAP, and Pine Bluff Arsenal (for white phosphorus). There is also a related meltout process installed at Ravenna AAP for removing TNT and Comp B loads from 90mm and 155mn projectiles. This meltout process applies steam only to the outside of a munition in a steam cabinet.

6-7. APE 1236 DEACTIVATION FURNACE

a. Small explosive items are normally demilitarized in the deactivation furnace. The APE 1236 Deactivation Furnace is a steel rotary kiln having an overall length of 30 feet and a diameter of four feet (figs. 6-4 through 6-6). The main body is a horizontal retort (four 60 inch sections bolted end to end) with side walls about 2-1/4 inches thick and with a spiral internal element which acts like a screw conveyor in moving materials through the unit as the retort slowly rotates. Newer models have center retort sections with walls 3-1/4 inches thick in order to process individual munitions containing 800 grains of explosive. The furnace provides the capability for thermal destruction of explosives contained in small arms ammunition, primers, fuzes, and boosters. In addition, the furnace may be utilized for flashing 75mm through 120mm projectiles after washout of explosive charge. Items such as small arms ammunition, artillery fuzes, emptied 20mm cartridge cases, and the like are fed to the furnace at a predetermined rate prescribed for each item via a steel conveyor belt which carries them high above the mouth of the furnace and drops them down a chute into the feed end of the rotating retort. An oil or gas fired burner in the discharge end of the tube provides a flame and hot flue gases, which sweep through the retort and up a stack mounted over the feed end. The temperature at the burner end is about 1200°F; it is about 600-900°F in the middle sections and about 400-500°F at the stack end.

b. As the items being demilitarized are carried through the retort by the spiral element, explosives burn or detonate as they reach their burning or initiation temperatures. The furnace operating speeds are adjusted so that this happens approximately in the center of the retort. After explosion or burning, the items progress on through the 1200°F section and fall out the discharge end onto another conveyor which carries the now-inert metal parts to a

scrap collection bin. Some installations carry the scrap metal over a magnet which separates ferrous from nonferrous scrap, and others simply collect mixed scrap. Some installations collect molten lead in ingot molds, and others simply leave it in the mixed scrap.

c. The quantity of detonating explosives allowed to be fed to the Deactivation Furnace is normally limited to 600 grains (0.086 pounds, or 39 grams) per item for retorts having a 2-1/4 inch thick wall and 800 grains (0.114 pounds or 52 grams) per item for retorts having a 3-1/4 inch thick wall. This permits handling of intact small arms ammunition through 20mm and most artillery fuzes, primers, and the like. Typical feed rates run about one item per second. If the furnace temperature, rate of rotation, and feed rate is not known for a specific item, then contact the Directorate for Ammunition Equipment (D/AE) Tooele AD for supplemental information.

d. The probable ultimate safety limit is much larger than 600 or 800 grains. However, the official limit for APE 1236's in the field is still 600 grains or 800 grains per item depending upon the furnace model.

e. Fuel oil consumption is estimated by Tooele AD at 9 to 21 gallons per hour, depending upon the work rate.

f. The majority of the deactivation furnaces are equipped with KIT E010 pollution control systems (fig. 6-7).

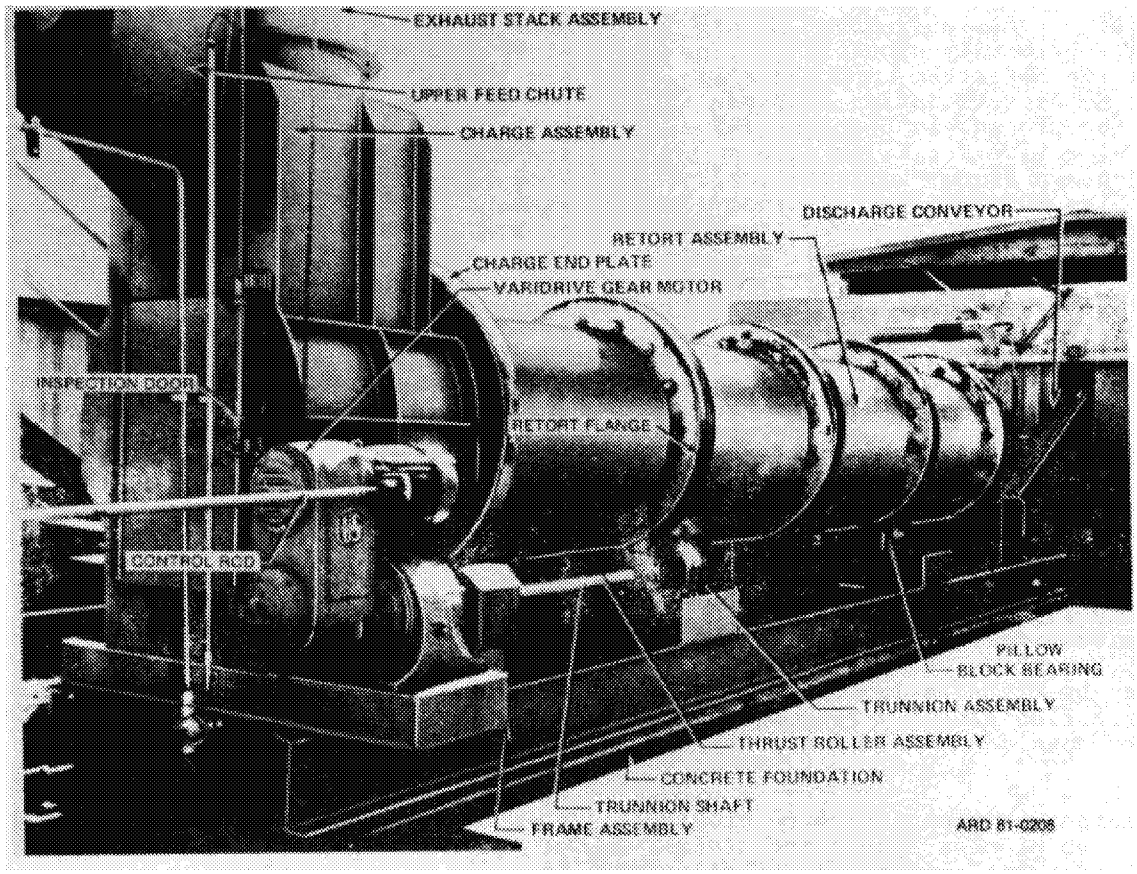

Figure 6-4. APE 1236 deactivation furnace (general assembly).

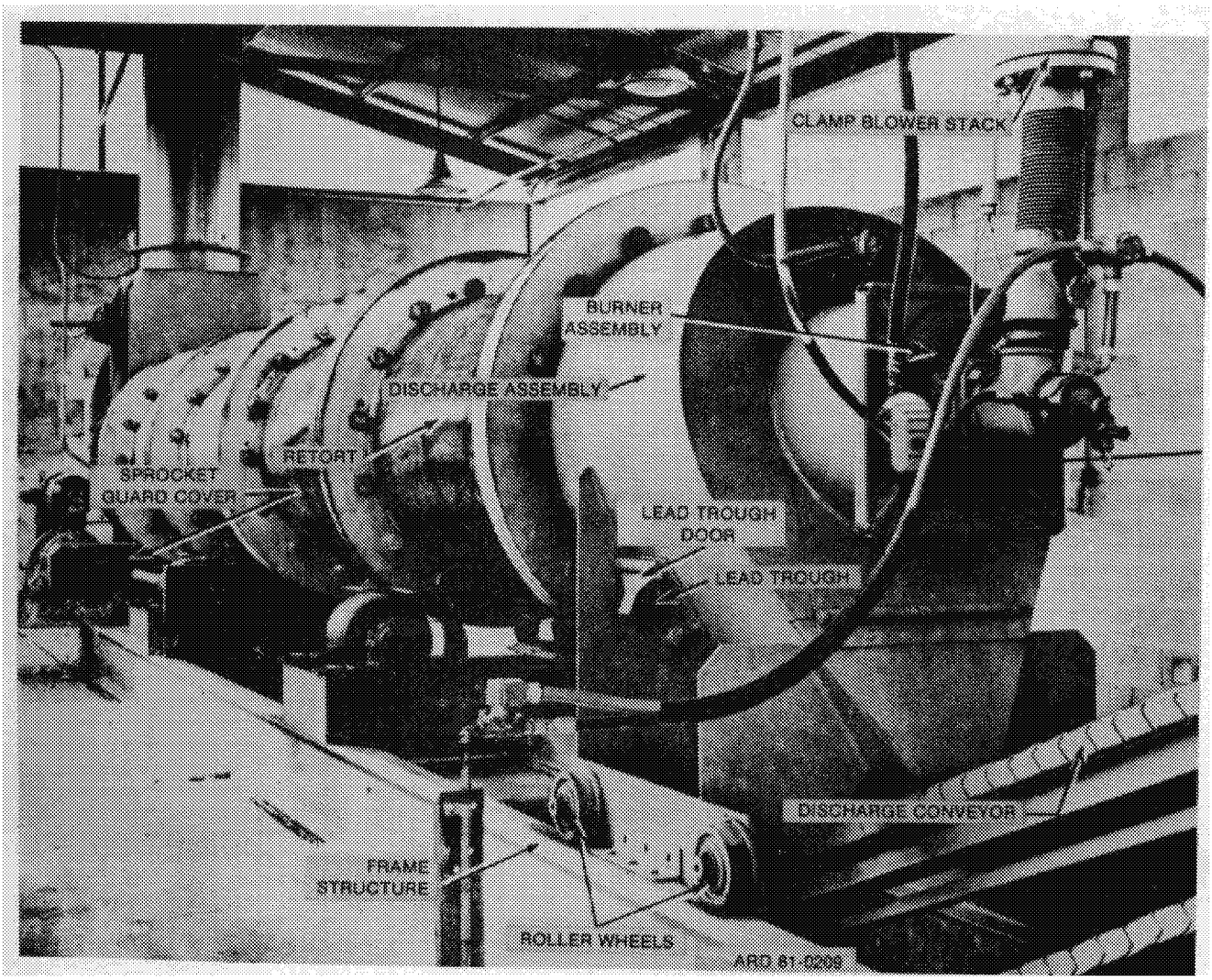

Figure 6-5. APE 1236 deactivation furnace (discharge assembly).

g. The APE 1236 Deactivation Furnace is described in detail in the Army "Operation and Maintenance Manual, Deactivation Furnace APE 1236," 9 December 1970, U.S. Army Armament, Munitions and Chemical Command, Dover, New Jersey.

h. Naval Sea Systems Command Publication TK 3P90R01, April 1980, provides data for processing munitions through the Rotary Deactivation Furnace (APE 1236). The publication provides the explosive weight, propellant weight, unit weight, temperature setting, RPM, and feed rate for various munitions by NSN. This publication provides an excellent guide for types of munitions which can be processed through the furnace.

6-8. OPEN BURNING GROUNDS

a. Open burning grounds provide a very economical means of demilitarization. These grounds provide the capability for open burning of scrap propellants and explosives, wooden and fiber boxes, fiber containers, and other unserviceable combustible materials common to ammunition operations. The burning process is accomplished by burning unserviceable combustibles which in turn ignite scrap propellants and explosives. This process is also used to flash off residue explosive from large metal components.

b. Other than the now-banned ocean dumping, open burning is perhaps the oldest and most universal demilitarization technique. Unwanted material is piled in a remote, open field with sufficient starter fuel such as wastepaper, scrap dunnage, etc., and ignited. There is no elaborate equipment, negligible fuel cost, and little labor required. However, it

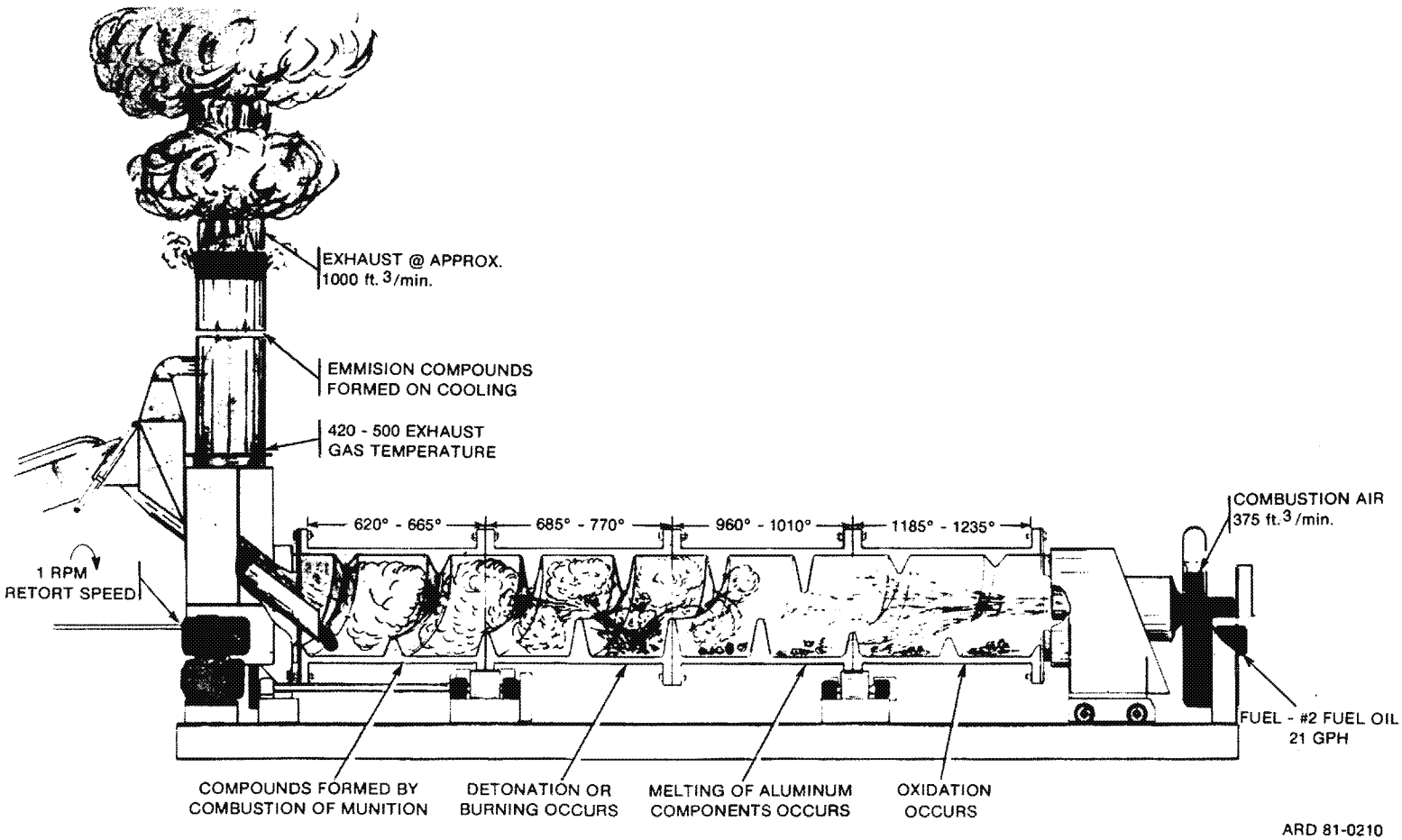

Figure 6-6. Furnace deactivation.

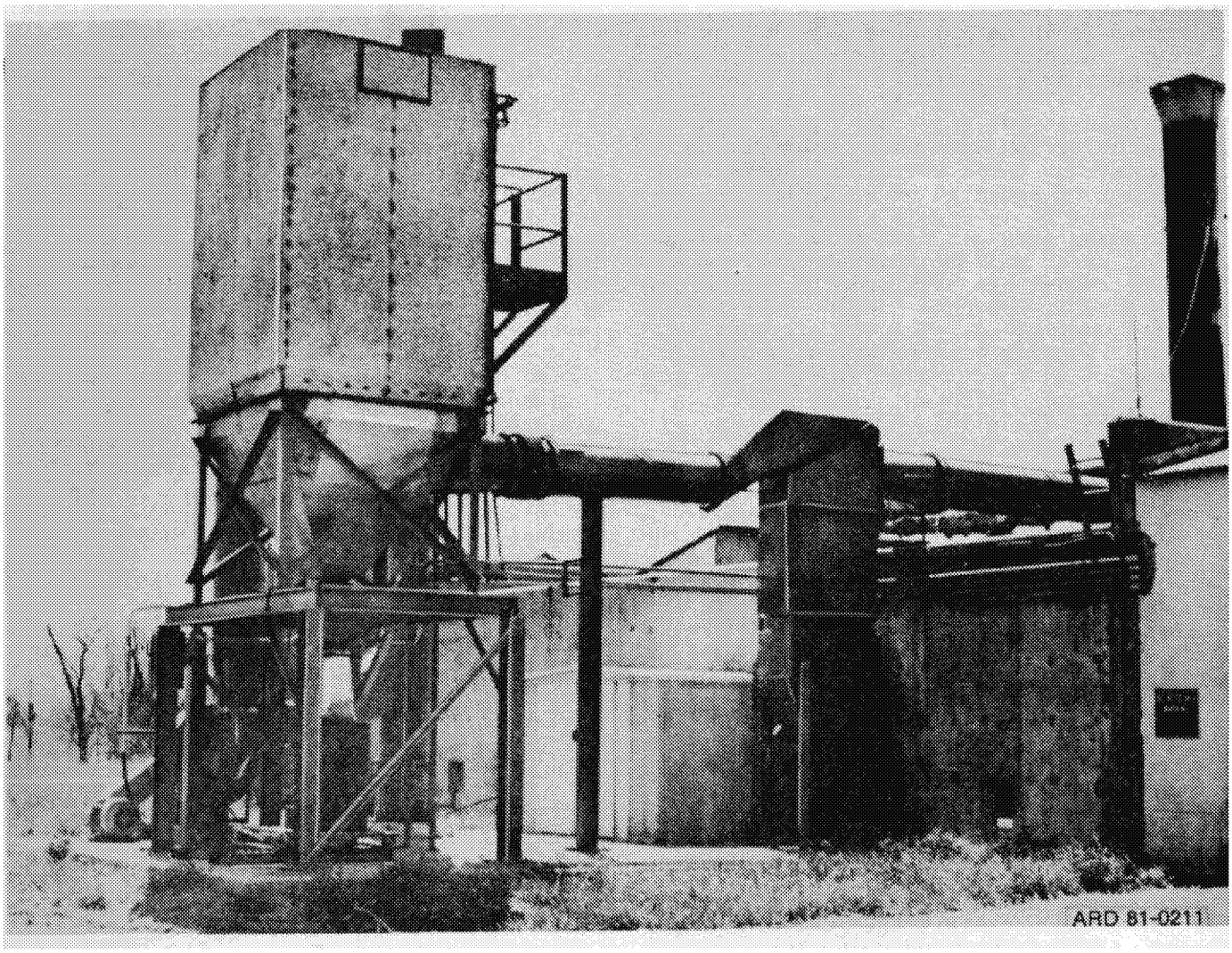

Figure 6-7. KIT E010 air pollution control system.

is sometimes a very smoky operation, and it is no longer ecologically acceptable in some states where there are alternatives. There may be no alternative at times, as in the case of white phosphorus shells, certain surplus rocket motors, and items too deteriorated for safe disassembly. Therefore, open burning is universally practiced to some degree, and will probably always be necessary to a limited extent.

c. Burning maybe accomplished on the surface, in a pit, or in a trench. All removable detonators, blasting caps, etc., will be removed from munitions to be burned to avoid unexpected detonation. Munitions will be examined carefully to make certain that no removable detonators or blasting caps are included. Sites will not be left unattended during burning, but will be observed from the specified safety distance. Detonators that are removed from munitions items only maybe laid loosely upon the pile and destroyed with the munitions.

d. The selection of a site for destruction of explosives by burning shall be based on the principle of obtaining the maximum practicable distance from all magazines, inhabited buildings, operating buildings, public highways, and railways. Consideration shall be given to the direction of prevailing winds and closed coverage. Consideration shall also be given to the possibility of mass detonation during burning operations. Whenever possible, natural barricades should be utilized between the burning site, operating buildings, and magazines. The burning site shall be not less than inhabited-building distances (as prescribed by quantity-distance tables applicable to the material being destroyed) from all structures and public thoroughfares. All dry grass, leaves, and other

flammable materials within a radius of 200 feet from the point of destruction will be removed. Firefighting equipment for combating grass fires will be kept readily available and, if practicable, the ground at the point of destruction should be wetted down with water at the close of each day's operation. Burning shall not be repeated on previously burned-over plots within 24 hours unless the burning area has been soaked thoroughly with water and an inspection by competent personnel has been made to assure the safety of personnel during subsequent burning operations. The use of concrete mats for burning or detonation is not permitted.

6-9. OPEN DETONATION GROUNDS

a. Open detonation is a very economical method of demilitarizing munitions. Disposal by detonation may be accomplished on the surface or in a pit or trench. Procedures vary greatly due to the size of the item, amount and type of explosive contained in the item, amount and type of explosive charge necessary to ensure complete destruction, method of priming, etc.

b. The selection of a site for destruction of ammunition by detonation is based on the same principles as used in selecting a burning ground site. Such a site should not be less than 2,400 feet from public highways, public railways, inhabited buildings, magazines, and operating buildings. Where this distance cannot be attained, a pit or trench shall be used to limit the range of fragments. The pit or trench should be a minimum of four feet deep and materials being detonated should be covered with at least two feet of earth. The 2400 foot limitation does not apply where substantially constructed deactivation furnaces are used for the destruction of small quantities of fuzes, primers, small arms ammunition, etc. When demolition charges are to be covered with earth, the charges should be fitted with detonating cord leads of such length that the leads will protrude through the earth cover into the open.

c. Another factor that must be considered, when selecting a site for the destruction of explosives and ammunition, is determining that the proposed site does not conflict with existing or proposed airways. Clearance for the proposed site will be obtained from the appropriate Army Airspace Representative through the Administrator, Federal Aviation Agency (FAA). Reference may be made to AR 95-50 for additional information.

d. The quantity of material to be destroyed at one time will depend upon local conditions. This quantity will be carefully determined by starting with a limited number and then gradually increasing that number until the maximum which can be destroyed without damage to surrounding property or causing disturbance to civilian areas is attained.

e. In the absence of specific regulations or information covering the phase of the destruction of explosive material, instructions will be requested from the Commander, U.S. Army Armament Materiel Readiness Command, Rock Island, IL 61299 or Commander, U.S. Army Missile Command, Redstone Arsenal, AL 35809.

6-10. CHEMICAL MUNITION DEMILITARIZATION METHODS

a. Chemical demilitarization can only be accomplished at a limited number of facilities. Chemical Munitions are generally processed through the following principal items of equipment:

(1) Furnaces for explosive deactivation, chemical decontamination of metal parts, and incineration of small quantities of chemicals.

(2) Afterburner.

(3) Quencher.

(4) Electrostatic precipitators to remove particulates.

(5) Packed tower scrubbers.

(6) Discharge stack.

(7) High capacity ventilation systems to maintain negative pressures.

b. A flow diagram of the system is shown in figure 6-6. A detailed description of the process is as follows:

(1) Deactivation furnace. Deactivation furnace is an oil fired APE 1236 ammunition disposal retort equipped with an over-pressure control system and bearing cooling system. The internal helix keeps furnaced materials moving

toward the burner end. The furnace also can be capable of liquid material injection for first stage incineration of i small quantities of hazardous liquids. Typical operating conditions are 400°F inlet temperature, 1200°F burner end gas temperature, 600°F flue temperature. The furnace is used for first stage incineration and volatilization of materials contained in bottles, vials, and wooden or cardboard boxes.

(2) Decontamination furnace. The Decontamination Furnace is a one-of-a kind masonry lined, oil fired furnace. It has two heating zones: Zone 1 is used for heat treating metals, burning of combustible packing materials or contaminated refuse and melting of low melt point inert parts; and Zone 2 is used as a secondary flue gas incineration chamber. The Decontamination Furnace is fed by means of the decontamination module. Metal parts are either deposited directly on refractory pedestals or fed in stainless steel trays. Combustible materials and parts to be melted are also fed via these large stainless steel trays which resemble troughs. The Decontamination Furnace exhaust has the capability of being ducted into the afterburner.

(3) Afterburner. The Afterburner is an oil fired horizontal cylindrical furnace which accomplishes second stage incineration of gas phase materials exiting the Deactivation Furnace. The Afterburner is equipped with a replaceable refractory lining which is currently rated for 2600°F service. Higher temperature refractories are available. Typical operating parameters are: inlet end temperature 2500 2600°F, pre-discharge temperature 1700° 1750°F, gas residence time greater than two seconds (controllable).

(4) Quench chamber. The Quench Chamber is a steel vessel which accepts the Deactivation and Decontamination furnace discharge gases and cools them by means of spray humidification. Additionally, a large part of the particulate loading in the flue gas streams is removed by the alkaline brine spray medium. Acid gases in the flue gases are also greatly reduced by the Quench Spray Action. Inlet temperature is typically 600°F. Outlet temperature is controlled to 225°F.

(5) Electrostatic precipitator. The Electrostatic Precipitator (EP) is a dry type electrostatic dust collector manufactured by Precipitator Pollution Control Systems. This unit has five cells arranged in series. The purpose of the unit is the removal of gas borne metal oxide particles such as tin, zinc, arsenic, and lead from the furnace gases and dust generation. These particles are removed down to the sub-tenth microm size range which is a significant achievement. Additionally, the soot and fly ash generated by incineration of wood, plastics, and other organic materials is removed.

(6) Packed tower scrubbers. The final polishing step for environmental control of furnace gases and ventilation air is the use of Packed Tower Scrubbers. These units, too, operate in parallel on the split waste gas stream. They are conventional counter current packed section towers utilizing polypropylene pall rings, random dumped, as a packing medium and sodium carbonate brine as the scrubbing medium. Their purpose is to remove any resident acid gases which survive the Quench Spray Chamber. They serve as an environmental safety measure in the event of an upstream system malfunction. The plant microprocessor will automatically boost the scrubber alkalinity with caustic soda solution to remove pollutants generated by the upstream condition.

(7) Discharge stack. All gaseous effluent is discharged to the atmosphere via two driving fans feeding a single stack.

(8) Ventilation system. The facility utilizes a sophisticated negative pressure ventilation system to control air flow direction and volumes. Major process areas and individual operations are maintained under capture velocities and air change requirements which are in strict compliance with Army and NIOSH/ OSHA regulations and standards.

CHAPTER 7

DEMILITARIZATION/DISPOSAL TRAINING

7-1. GENERAL

Demilitarization and disposal of munitions is a highly specialized field requiring proper instruction and training of personnel. There are specific training programs available for both civilian and military personnel which should be completed prior to field assignment. Detailed instructions for demilitarization and disposal of munitions are provided in depot maintenance work requirement (DMWR) format and also in letters of instruction for special cases.

7-2. ON-SITE TRAINING

A training program shall be instituted in each installation to develop and maintain employee's interest in the demilitarization/disposal program, and to insure that employees are trained so they may safely and efficiently conduct the operations. The training director shall determine the need and arrange for training materials and program. Training may be accomplished by the supervisor on the job or by special instruction in a local classroom. In order to insure receiving the maximum benefits from any training, supervision shall maintain a continuous program of followup, reinstruction, and enforcement of regulations and procedures with each employee.

7-3. OFF-SITE TRAINING

Two courses are presented at the US Army Defense Ammunition Center and School which is located at the Savanna Army Depot Activity, Savanna, IL. Personnel participate in a training program which consists of formal classroom and on-the-job training.

a. Ammunition Demilitarization Course. This four-week course defines functions and responsibilities concerned with demilitarization operations. After a brief review of basic publications associated with ammunition and demilitarization, operational safety, standard equipment, and approved demilitarization methods are presented. Approved methods discussed are burning, disassembly, detonation, and washout. Requirements for decontamination of facilities, components, scrap metal, and machinery are also presented. Practical exercises are completed to reinforce teaching points. Students are given a demilitarization objective and an SOP is prepared to completely disassemble an item of ammunition. Final disposition of each component must be specified. Upon completion of the SOP, students actually set up and disassemble inert models of the demilitarization objective. Live demolition exercises are conducted consisting of the following:

(1) A discussion of meteorological conditions (e.g., temperature gradient, wind speed and direction, time of day, and other weather conditions) and their effect on blast waves and the possibility of their being directed back to earth.

(2) A review of the proper placement of charges for various items as stated in approved DMWR's and the rationale for such placement.

(3) A demonstration of detonation techniques by the school staff including individual set up, priming, and functioning of explosive charges.

(4) The students, under supervision, will set up electric and nonelectric charges to detonate unserviceable ammunition (e.g., 5 inch projectile, hand grenades, and mortars) in accordance with an approved SOP.

b. Surveillance of 'Maintenance/Demilitarization Operations Course. Another four-week course provides training in the Surveillance of Maintenance/Demilitarization Operations to include the following area:

(1) Review of publications, drawings, and other sources of information peculiar to ammunition renovation/demilitarization operations.

(2) Application of safety standards (explosive and industrial) to maintenance and demilitarization situations.

(3) Consideration of special equipment, tools, and buildings to be used.

(4) Requirements for planning and reporting.

(5) Techniques and approved methods used in maintenance/demilitarization operations.

(6) Actual hands-on training is provided using inert ammunition and components in a fully equipped operating building. Training consists of physically running a complete maintenance/demilitarization operating line using student prepared SOP's and line layouts.

7-4. DEPOT MAINTENANCE WORK REQUIREMENT (DMWR)

a. DMWR's are documents which contain the minimum requirements for the demilitarization and disposal of specific munitions. It specifies equipment and materials to be used, methods, procedures, and techniques, safety and inspection criteria, and other essential factors to assure proper demilitarization and disposal of the item involved. It serves as a basis for preparing local standing operating procedures (SOP).

b. An index of Depot Maintenance Work Requirements is contained in DARCOM pamphlet 310-9. This is an index of current Depot Maintenance Work Requirements that have been reported to the US Army DARCOM Materiel Readiness Support Activity by the various commodity commands. This pamphlet is divided into six sections which contain the following information:

(1) Section I-General. This section contains instructions on use of the pamphlet and identifies proponents of the various types of materials covered.

(2) Section II-Numerical Index. This section contains a complete listing of current DMWR and changes that were in effect at the time of publication.

(3) Section III-Alphabetical Index. This section is an alphabetically arranged subject index to the publications listed in Section II, which lists all security classified DMWR first, as indicated with the asterisk (*), then according to the abbreviated or full title.

(4) Section IV-Reference Number to DMWR Number. This is a number other than a National stock number (NSN) used to identify the item. It is cross referenced to the DMWR number.

(5) Section V-NSN to DMWR Number, This is a cross-reference to the NSN assigned to the DMWR item.

(6) Section VI-Rescissions. This section lists all rescinded DMVR's since the previous edition of this index.

c. A cross-reference listing of demilitarization DMWR to DODIC has been prepared by the US Army Armament Materiel Readiness Command, Rock Island, IL 61299. Copies of this listing may be obtained by writing to that headquarters, ATTN: DRSAR-DSM.

ED_001691B_00007347

CHAPTER 8

DISPOSAL METHODS

8-1. GENERAL

a. One method of disposal is the process of eliminating unwanted material/munition items from the inventory by destruction.

b. Disposal of certain munitions may be accomplished by burning or detonation. General procedures for each disposal method are included in the chapter. Specific procedures and additional requirements are included in other chapters of this manual and in the specific Demilitarization Depot Maintenance Work Requirement (DMWR) for the item.

c. Disposal of munitions by burning or dumping in wells, marshes, streams, inland waterways, landfills, or pits is not authorized.

d. Munitions with compatible characteristics and similar disposal procedures may be disposed of in the same operation, if permitted by the applicable demilitarization DMWR. The DMWR index is identified in Chapter 7

8-2. BURNING ON THE SURFACE

WARNING

BURNING HIGH EXPLOSIVES WHEN INITIATORS OF ANY DESCRIPTION ARE INCLUDED WILL PROBABLY RESULT IN A DETONATION. WHEN BURNING EXPLOSIVES AND/OR MUNITIONS, PROTECTION AGAINST THE POSSIBILITY OF A DETONATION MUST ALWAYS BE TAKEN. MIXING OF VARIOUS TYPES OF BULK EXPLOSIVES WILL NOT BE PERMITTED DURING BURNING OPERATIONS. SINCE EXPLOSIVES CONTAIN THEIR OWN OXIDIZER, BURNING EXPLOSIVES CANNOT BE EXTINGUISHED BY SMOTHERING.

BURNING OF ICM'S WILL NOT BE UNDERTAKEN AS THIS COULD CAUSE SCATTERING OR EJECTION OF CARGO. SCATTERED OR-EJECTED CARGO IS CONSIDERED ARMED AND HAZARDOUS.

CAUTION

DISPOSAL BY OPEN BURNING WILL NOT BE UNDERTAKEN WHEN WIND VELOCITY EXCEEDS 15 MPH.

NOTE

Open burning of munitions may violate Federal, State, or Local Environmental Protection Agency (EPA) Regulations. Permission must be obtained prior to start of burning operations.

a. Disposal by burning may be accomplished on the surface, in a pit, in a trench, or in a deactivation furnace in accordance with the following paragraphs. Munitions to be burned will be examined carefully to make certain that no removable detonators or blasting caps are included. All removable detonators, blasting caps, etc., will be removed from munitions to be burned to avoid unexpected detonation. Sites will not be left unattended during burning, but will be observed from the specified safety distance.

b. Surface burning is an expeditious method of disposing of munitions such as, noninitiating high explosives and solid propellants. Before surface burning is accomplished, the area must be surveyed to assure that the ground is perfectly smooth, free of loose material, without cracks or crevices, and is packed sufficiently to prevent explosive materials from infiltrating during burning operations. Hazardous materials must also be considered on an individual basis as to the depth that it can be stacked or positioned in order to prevent an unwanted detonation. Usually bulk explosives/propellants/pyrotechnic materials are spread in a thin layer over a combustible bed in order to facilitate a proper burning environment. Surface burning operations will not be

repeated at the same burning site within a 24 hour period. Generally, surface burning procedures are as follows:

(1) Stack items/containers in a pile on the surface.

WARNING

VOLATILE FLAMMABLE LIQUID WILL NOT BE USED TO FACILITATE BURNING.

NOTE

Volatile flammable liquid is a liquid whose vapor can be ignited at or below temperatures of 100°F, i.e., ether, acetone, gasoline, ethyl alcohol, methyl alcohol, benzene, toluene, zylene, anyl acetate, napalm, and JP-4. Diesel or fuel oil may be poured over the material to assist combustion. Oil may be added either as layers are constructed or after all munitions have been laid.

(2) Pour diesel/fuel oil over entire pile, if applicable.

(3) Prepare ignition train in accordance with Chapter 5.

(4) Effect ignition in accordance with Chapter 5.

(5) Inspect the pit for unburned or partially burned munitions. Inspection will not be performed until at least 12 hours after the fire has burned out. The inspection will be performed by one qualified person with a second qualified person acting as a safety backup.

8-3. BURNING IN PITS OR TRENCHES

Pits or trenches will be utilized if the possibility of propulsion exists or to limit fragmentation if detonation should occur. Pits or trenches will not be reused within a 24 hour period. The applicable demilitarization DMWR will be referred to for additional information pertaining to disposal of a specific munition. Generally, pit/trench burning procedures are as follows:

a. Dig a pit/trench at least 1.22 meters (four feet) deep with sides sloping enough to prevent cave-in. Size of the pit or length and width of the trench will be determined by the quantity of material being disposed of and by safety distances established for the burning site.

b. Place combustible material, such as scrap wood, in the bottom of the pit at least 0.31 meter (one foot) deep.

c. Place munitions on combustible material, ensuring that the combustible material extends beyond the layer of munitions. Layers of combustible material and munitions will be formed as necessary, allowing an air space of not less than 0.31 meter (one foot) between the top layer of munition and the top of the pit/trench.

d. Pour motor/fuel oil over entire pile, if applicable.

e. Prepare ignition train in accordance with Chapter 5.

f. Effect ignition in accordance with Chapter 5.

g. Inspect the pit for unburned or partially burned munitions. Inspection will not be performed until at least 12 hours after the fire has burned out. The inspection will be performed by one qualified person with a second qualified person acting as a safety backup.

8-4. BURNING IN DEACTIVATION FURNACES

A deactivation furnace may be used for the disposal of certain munitions. A furnace is considered a safer more expeditious method of burning such items as small arms ammunition, delay elements, primer detonators, etc. Deactivation furnaces are described in Chapter 6.

8-5. DETONATION

Disposal by detonation is accomplished by placing demolition charges or other explosive materials or single or stacked quantities of munitions, priming the charges, and detonating from a safe distance. Specific instructions on the use of demolition materials and firing systems are contained in the individual demilitarization DWR's and in other chapters of this manual.

WARNING

DO NOT ATTEMPT TO DETONATE ANY ITEM USING LESS THAN THE AMOUNT OF EXPLOSIVE CHARGE SPECIFIED IN THE APPLICABLE DEMILITARIZATION DMWR.

BLASTING CAPS WILL NOT BE BURIED. DO NOT WORK WITH ELECTRIC BLASTING CAPS OR OTHER ELECTROEXPLOSIVE DEVICES WHILE WEARING STATIC PRODUCING CLOTHING(NYLON, SILK, SYNTHETIC HAIR, ETC.). BLASTING CAPS WILL BE CARRIED IN APPROVED CONTAINERS AND WILL BE KEPT OUT OF DIRECT RAYS OF THE SUN, WHENEVER POSSIBLE. WHEN EXPLOSIVE CHARGES ARE TO BE COVERED WITH EARTH OR TAMPED WITH EARTH, THE CHARGES WILL BE FITTED WITH DETONATING CORD LEADS THAT HAVE A MINIMUM OF 2 METERS (SIX FEET) UNCOVERED ON THE EARTH'S SURFACE.

A SEARCH OF THE SURROUNDING AREA WILL BE MADE AFTER EACH DETONATION. ANY FUZED MUNITION OR ITEMS WHICH MAY HAVE INTERNALLY DAMAGED COMPONENTS THAT HAVE BEEN THROWN FROM THE PILE/PIT WILL BE DETONATED IN PLACE. WHERE OPERATIONS REQUIRE THE USE OF A PERSONNEL SHELTER, THE SHELTER WILL BE LOCATED NOT LESS THAN 91 METERS (300 FEET) FROM THE DISPOSAL SITE AND WILL AFFORD SUBSTANTIAL FRAGMENT-PROOF OVERHEAD COVER AND FRONTAL PROTECTION.

8-6. CERTIFICATION OF INERT SCRAP MATERIALS

a. All scrap and salvaged materials generated from demilitarization/disposal operations will be inspected and certified prior to sale, reuse or storage in accordance with DARCOM-R 385-100/TM 9-1300-206.

b. Material for sale will be transferred to the Defense Property Disposal Officer in accordance with DOD 4160.21-M.

CHAPTER 9

EXISTING DEMILITARIZATION FACILITIES AND CAPABILITIES

9-1. DESCOM AND AMCCOM FACILITY LOCATIONS

Ammunition Storage locations, under control of DESCOM and AMCCOM, having demilitarization/disposal capabilities and facilities are shown in figure 9-1.

9-2. DESCOM DEPOT FACILITIES AND CAPABILITIES

a. Current conventional ammunition demilitarization facilities and capabilities at DESCOM Depots vary widely in available facilities, capabilities, and environmental restrictions. These are summarized in table 9-1. All depots have adequate disassembly facilities with additional breakdown equipment and tooling being required for new or unique munitions table 9-2.

b. APE 1300 washout plants are operational at Anniston Army Depot and Lexington Blue-Grass Depot Activity. The only system equipped with the new charcoal filter, as a pilot model, is at Lexington Blue-Grass which is currently undergoing testing and evaluation. Following operational approval, the charcoal filter system will be available as a standard modification to existing washout plants at an estimated cost of $65,000 (FY81 Funding).

c. Deactivation furnaces (APE 1236 with KIT EO10) are available at all depots except Ft. Wingate and Navajo Depot Activities. APE 1276 can be installed at the above two installations at a cost of $160,000 each (FY 81 Funding). In addition, there are two primer popping furnaces at Anniston Army Depot and one primer popping furnace at Red River Army Depot.

d. Above ground detonation capability was found to be extremely limited at nine depots. Explosive limits vary between 0 and 100 pounds. These severe detonation restrictions are a result of the proximity of local population together with prevailing meteorological and soil conditions. Ft. Wingate and Navajo Depot Activities have above ground detonation capability of 5000 pounds each and Sierra Army Depot 10,000 pounds. Detonations at each facility are required to be separated by a specified time delay.

e. Below ground detonation limits are usually higher than above ground limits at each of the depots. Limits vary between 50 and 10,000 pounds depending upon the location of the depot.

f. Open burning sites exist at all 12 depots. There are environmental restrictions at most installations normally governed by meteorological conditions together with the proximity of the local population.

9-3. AMCCOM INSTALLATION FACILITIES AND CAPABILITIES

a. Current conventional ammunition demilitarization facilities and capabilities at the AMCCOM Installations is very similar to that at DESCOM Depots and are summarized in table 9-1.

b. There is an operational washout plant at Hawthorne Army Ammunition Plant which lacks the charcoal filter system for water treatment. There is an additional washout plant at Crane Army Ammunition Activity which is operational. McAlester Army Ammunition Plant does not have washout facilities.

c. There are operational steamout facilities at Crane, Hawthorne, and McAlester.

d. Two deactivation furnaces (APE 1236) are equipped with pollution control devices at Crane Army Activity but pollution control devices are required at Hawthorne and McAlester for their furnaces.

e. Only Hawthorne has an above ground detonation capability. It is 3000 pounds per detonation.

f. Below ground detonation is permitted at McAlester with a 150-pound limit, and at Crane with a 500-pound limit per detonation.

g. Open burning sites exist at Crane, Hawthorne, and McAlester. There are some environmental restrictions or limitations at each of the installations.

h. Current demilitarization capability at Pine Bluff Arsenal includes nontoxic chemical and White Phosphorus (WP)

US ARMY
ARMAMENT
MUNITIONS
CHEMICAL COMMAND

SINGLE MANAGER FOR CONVENTIONAL AMMUNITION
AMMUNITION STORAGE LOCATIONS

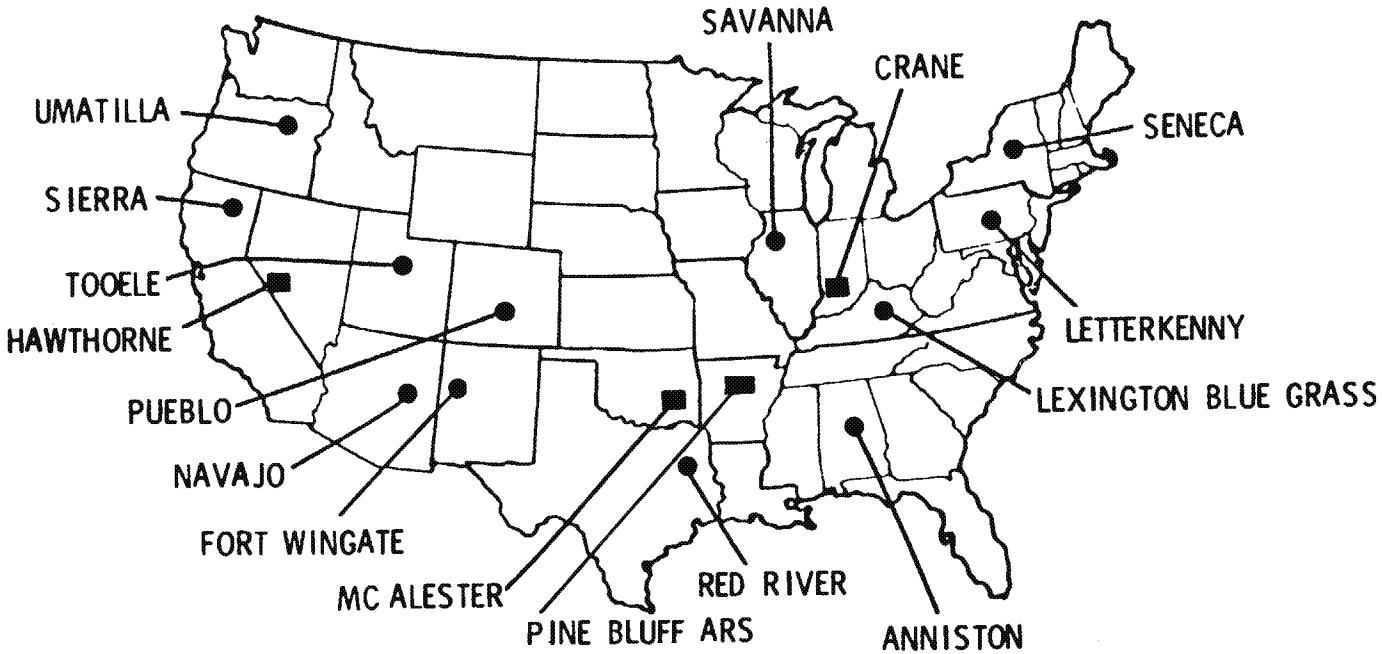

ARD 81-0212-A

● UNDER COMMAND OF US ARMY DEPOT SYSTEMS COMMAND

■ UNDER COMMAND OF US ARMY ARMAMENT, MUNITIONS AND CHEMICAL COMMAND

Figure 9-1. Ammunition storage location.

ED_001691B_00007347

Table 9-1. DESCOM and AMCCOM Capabilities Summary

Depot	Washout capabilities	Deactivation capabilities	Detonation capabilities	Open burning capabilities
ANNISTON AD	1 APE 1300 OPERATIONAL	2 APE 1050 POPPING FURNACES 1 APE 1236 W/KIT E010	22 SITES 15 LB ABOVE 6 SITES 1,000 LB BELOW w/10 FEET EARTH COVER	4 SITES; 1 CAGE 50 LB EACH TIME
CRANE	1 EACH NON-STANDARD STEAM-OUT W/O POLLUTION CONTROL 1 EACH WASHOUT PLANT NO POLLUTION CON-TROL REQUIRED	2 DEACT FURNACE W/AP CONTROL 1 SMALL PRIMER POPPING FURNANCE W/AP CONTROL	70 SITES 500 LB BELOW	2 LARGE SITES - NO RESTRICTIONS
FORT WINGATE DA	1 APE 1300 REQUIRES REFURB, WATER TREATMENT AND CHAR-COAL FILTER	1 APE 1236 W/KIT EO10	8 SITES 5,000 LB ABOVE/10,000 LB BELOW	5 SITES NO CAGES 10,000 lb
HAWTHORNE AAP	1 NON-STANDARD LARGE ITEM 1 NON-STANDARD TO 750 LB	2 DEACT FURNACE W/O AP CONTROL	10 SITES, 3.000 LB ABOVE	2 SITES - NO RESTRICTIONS
LETTERKENNY AD	APE 1300 W/O CHAR-COAL FILTER	APE 1236 W/KIT E010	35 SITES 50 LB ABOVE/500 LB BELOW	3 SITES 6 CAGES 2 CONCRETE PADS 4,000 LB SMOKELESS/SITE
LEX BLUE-GRASS ADA	APE 1300 W/PA	APE 1236 W/KIT E010	30 SITES 50 LB BELOW W/4 FEET EARTH, 100 LB W/6 FEET EARTH	NO O.B. EXCEPT BY PERMIT
MEALESTER AAP	2 EACH NON-STANDARD. NO PA REQUIRED.	DEACT FURNACE WITH APE 1236 W/KIT E010	10 SITES 150 LB W/ 4 FEET EARTH	OPEN AREA RESTRICTED UNTIL CAGES ARE MANUFACTURING
NAVAJO	INOPERABLE	APE 1236 W/KIT E010	14 SITES 5,000 LB ABOVE/10,000 LB BELOW W/6 FEET EARTH	1 SITE W/CAGE

ED_001691B_00007347

Table 9-1. DESCOM and AMCCOM Capabilities Summary - Continued

Depot	Washout capabilities	Deactivation capabilities	Detonation capabilities	Open burning capabilities
PINE BLUFF	CHEMICAL ITEMS ONLY	1 DEACT FURNACE W/SCRUBBER 1 CHAIN GRATE FURN W/ SCRUBBER 1 FLUID BED INCINERATOR W/SCRUBBER	NONE	None
PUEBLO	APE 1300	APE 1236 W/KIT EO10	14 SITES 50 LB ABOVE/ 4,000 LB TO 20,000 LB BELOW	4 SITES 1 CAGE
RED RIVER	APE 1300 W/FILTER	2 APE 1236 W/KIT EO10	24 SITES 100 LB ABOVE/ 3,000 LB BELOW	1 SITE HE 50,000 LB 1 SITE SMOKELESS 60,000LB.
SAVANNA DA	1 APE 1300 W/O AP	APE 1236W/KIT E010	1 SITE 25 LB ABOVE/ 500 LB BELOW	9 SITES UNSAFE, UNSTABLE ONLY
SENECA AD	NONE	1 APE 1236 W/KIT EO10	8 SITES 50 LB ABOVE AND BELOW	8 SITES 1 CAGE WEATHER CONDITION RESTRICTIONS
SIERRA AD	NONE	1 APE 1236 W/KIT EO10	14 SITES 10,000 LB ABOVE	2 SITES P&E ITEMS AND CONTAMINATED WASTE ONLY
TOOELE AD	APE 1300 W/FILTER	1 APE 1236 W/KIT E010	9 SITES 592 LB ABOVE/ 5,000 LB BELOW W/7 FEET COVER	OPEN BURNING SITES AVAILABLE
		1 APE 1236 W/KIT E010	24 SITES 592 LB ABOVE/ 10,000 LB BELOW W/ 10 FEET COVER	
UMATILLA DA	APE 1300 W/O WATER TREAT-MENT, REQUIRES BOILER SYSTEM	1 APE 1236 W/KIT E010	24 SITES 50 LB ABOVE/ 100 LB BELOW W/ 2 FEET COVER	1 SITE

Table 9-2. Conventional Ammunition Demilitarization Facilities and Capabilities (AMCCOM)

ANNISTON ARMY DEPOT				
Disassembly facilities	**Washout**	**Deactivation furnace**	**Detonation**	**Open burning**
Bldg 381- 14,578 sq ft. Center substantial dividing wall with operational bays. Power conveyors. Powder collection system. Full complement of APE disassembly and breakdown equipment (Pull apart, debanding, defuzing, holding fixtures and depriming machines).	Bldg 172- APE 1300 plant. Plant is operational. Requires charcoal filter system.	Bldgs 58 & 59- 12,998 sq ft. 2 APE 1050 Primer Popping Furnaces (Small Arms Ammo). Pollution abatement not required. Caliber .30 and Caliber .50. Disassembly, delinking, decoring, deleading machines. Power conveyors. Powder collection system. Power carloading equipment.	22 detonation sites with electrical firing system. Detonation restrictions:15 lb above ground; 1,000 lb below ground with 10 ft of earth cover during ideal weather conditions.	15 burning sites with electrical leads. 1 burning cage; 50 lb net explosive maximum to be burned at one time.
Bldg 680- 22,246 sq ft. Center substantial dividing wall with operational bays. Power coneyors. Powder collection system. Bldg 171- Disassembly barricade for remote disassembly of explosive items with 50 lb or less explosive. Bldg 179- Disassembly barricade for remote disassembly (television) of items with more than 50 lb of explosive.		Bldg. 393- 1,451 sq ft. APE 1236 W/KIT E010	Alabama Air Pollution Commission, April 12, 1978, granted approval to continue the demilitarization of ammunition items of over 600 grains explosive at burning grounds and demolition pit subject to: (1) Burning will be conducted only between the hours of 9:00 a.m. and 3:00 p.m. (2) Burning will be conducted only when there is good ventilation. (3) If in the future a more suitable technique and/or facility is designed, Anniston Army Depot will discontinue the current open disposal method and adopt the new technique/facility.	

Table 9-2. Conventional Ammunition Demilitarization Facilities and Capabilities (AMCCOM)-Continued

Disassembly facilities	Washout	Deactivation furnace	Detonation	Open burning
ANNISTON ARMY DEPOT- Continued				
Bldg 600-11,059 sq ft. Substantial dividing walls. Overhead hoist capacity 5,000 lb. Capability for downloading CBU units. Bldg 168- 10,080 sq ft. Substantial dividing walls. Power conveyors. Powder collection system.				
FT. WINGATE ARMY DEPOT ACTIVITY				
Bldg 528- 21,644 sq ft. Center substantial dividing wall with operational bays. Power conveyors. APE disassembly and breakdown equipment (pull apart and depriming machines). Powder collection system. Monorail system.	APE 1300 plant w/o water treatment system. Washout system is of old design. Requires refurbishing and operational check out. System requires water treatment and charcoal filter system.	APE 1236 W/KIT E010	8 detonation sites. Detonation restrictions; 5,000 lb above ground; 10,000 lb below ground.	5 burning sites. No burning cage. Burning restrictions 10,000 lb.

ED_001691B_00007347

LETTERKENNY ARMY DEPOT				
Bldg 2383- 7,400 sq ft. Dividing walls separate operational bays. Power conveyor. Powder collection system.	Bldg 2365- APE 1300 plant w/o charcoal filter system. Requires dewinterizing, operational check-out and charcoal filter system.	Bldg 1456W- 6,000 sq ft. 7 burning cages.(Steel)	14 detonation sites non-electrical. Detonation restrictions; 50 lb above ground; 500 lb below ground. 21 Detonation sites (Elect)	3 burning sites. 2 elevated concrete pads with curbs for burning small arms ammunition bullets.
Bldg 3810- 22,000 sq ft. Center substantial dividing wall. Power conveyors. Powder collection system.		Class 1.1 not permitted to be processed because of 500 feet distance to recreation area.		Burning restriction: Maximum of 4,000 lb of smokeless powder can be burned per site on 3 sites.
Bldg 5647- 4,000 sq ft. Limited to missile disassembly.				
Bldg 2377- Disassembly barricade for remote disassembly of items with less than 50 lb of explosive.				
Bldg 2763- Deleted				

Table 9-2. Conventional Ammunition Demilitarization Facilities and Capabilities (AMCCOM)-Continued

LEXINGTON BLUE-GRASS ARMY DEPOT ACTIVITY				
Disassembly facilities	**Washout**	**Deactivation furnace**	**Detonation**	**Open burning**
Bldgs 550,555,562- Each 18,000 sq ft (Bldgs 550,555 each have powder collection systems.) Center substantial wall with operational bays. Power conveyors. Full complement of APE disassembly and breakdown equipment. Bldg 1166- Disassembly barricade for remote disassembly of items with less than 50 lb of explosive. Bldg 1319- Disassembly barricade for remote disassembly of items with more than 50 lb of explosive.	APE 1300 Plant with pilot model charcoal filter system installed. Additional charcoal column required.	Bldg 273- Small Arms Breakdown Facility. APE 1236 W/KIT E010 Bldg 275- Contaminated Waste Processor (small unit) will be completed sometime this year.	30 detonation sites with electrical firing system. Detonation restriction: 50 lb below ground with 4 feet earth cover; 100 lb below ground with 6 feet earth cover. Under ideal weather conditions, the upper limit may be used. NOTE: Upper limit seldom used because of blast pressures affecting neighboring residences.	Burning area. Meteorological conditions dictate when munitions can be burned.

The only open burning permitted by the Kentucky Environmental Protection Agency is for propellant which has reached a point of unacceptable stability.

Detonation is restricted to H.E. loaded munition on a specific item-by-item basis by the Kentucky Environmental Protection Agency.

NAVAJO ARMY DEPOT ACTIVITY				
Bldg 301- Partial center dividing walls with operational bays. Power conveyor. Powder collection system. Bldg 325- Small Arms Disassembly (Inactive)	Three major tank assemblies have been removed and installed at Tooele AD. Washout plant is completely inoperable. No cost estimate available.	APE 1236 W/KIT E010 - with Part B EPA permit being processed thru state and federal levels.	14 detonation sites. *Detonation restriction: 5,000 lb above ground; 10,000 lb below ground with 6 feet earth cover.	1 burning site.

*The limits indicated were recommended by Utah Study (December 15, 1959). Presently operating with self-imposed limitation of 1000 to 1200 pounds per shot.

PUEBLO ARMY DEPOT ACTIVITY				
Bldgs 711-741- Power conveyors. Powder collection system. APE disassembly and breakdown equipment. Bldgs 701 - 706 Small arms breakdown. Small items breakdown. Bldg 761 Small arms breakdown Power conveyors powder collection system. APE disassembly and breakdown equipment.	APE 1300 washout and pelleting system and water reclamation system.	APE 1236 W/KIT E010	14 detonation pits/holes. Detonation restriction: 50 lb maximum above ground; 4,000 lb to 20,000 lb maximum below ground per pit/hole. State EPQ requires particulate emission monitoring.	4 burning sites. 1 burning cage.

Table 9-2. Conventional Ammunition Demilitarization Facilities and Capabilities (AMCCOM)-Continued

Disassembly facilities	Washout	Deactivation furnace	Detonation	Open burning
PUEBLO ARMY DEPOT ACTIVITY-Continued				
AWS - 10 Decluster M42 rkt mtr for DEMIL (Nike Herc) prepare M30 rkt mtr and M135 whd for DEMIL (Nike Herc). Small arms breakdown. Small items breakdown. TV Disassembly Plant for disassembly of bombs, large separate loading shell, rocket motors, etc. Bldg AWS - 4 Breakdown of large or small items.				
RED RIVER ARMY DEPOT				
Bldg 1163 - 16,280 sq ft. Bldg 1116 - 15,540 sq ft. Center substantial dividing wall with operational bays. Power conveyor. Powder collection system. Full complement of APE disassembly and breakdown equipment. Bldg 1149 - Disassembly barricade for remote disassembly of items with less than 70 lb of explosive.	Bldg 1122 - 3,674 sq ft. APE 1300 plant with water reclamation system. Requires operational checkout and charcoal filter system. 4 aeration lagoons.	Bldg 1025 & 1027 - 2 APE 1236W/KIT E010	1 detonation site w/4 electrical firing terminals 6 circuits each. Detonation restriction:100 lb above ground; 3,000 lb below ground. 8 static firing tanks for Hawk Missile Motors.	High explosive burning area 350,000 sq ft with an explosive limit of 50,000 lb. Smokeless powder burning area 250,000 sq ft with an explosive limit of 60,000 lb. Open burning of explosives and propellants approved by Texas Air Control Board-2 April 80. Destruction of chemical ammunition disapproved.

Table 9-2. Conventional Ammunition Demilitarization Facilities and Capabilities (AMCCOM)-Continued

RED RIVER ARMY DEPOT-Continued				
Disassembly furnace	Washout	Deactivation furnace	Detonation	Open burning
Bldg 1107 - Disassembly barricade for remote disassembly of items with more than 70 lb of explosive. Both disassembly facilities equipped for quick installation of television observation equipment.				

SAVANNA ARMY DEPOT ACTIVITY				
Bldg 729- 16,176 sq ft. Dividing walls separate operational bays. Power conveyor. Powder collection system. Full complement of APE disassembly and breakdown equipment. Bldg 742- 27,550 sq ft. Dividing walls separate operational bays. Power conveyor.	Bldg 2208- APE 1300 plant requires dewinterizing operational checkout and charcoal filter system.	Bldgs 941-C47- 1 APE 1236 W/KIT E010 1 Explosive Waste Incinerator 1 Contaminated Waste Processor	1 detonation site. Detonation restriction:25 lb above ground; 500 lb below ground. Illinois EPA prohibit open burning except for unsafe/unstable ammunition.	9 burning sites. 4 flashing areas.
SENECA ARMY DEPOT				
Bldg 612- Disassembly building. Partial center substantial dividing wall with operational bays. Power conveyors. Powder collection system.	None	Bldg 367- 1-APE 1236 W/KIT E010	8 detonation sites. Detonation restriction: Quantity-distance restriction 100 lb. Depot restriction: 50 lb above or below ground.	8 burning sites. 1 burning cage. Burning restriction: Weather conditions and wind direction dictate when munitions can be burned.

Table 9-2. Conventional Ammunition Demilitarization Facilities and Capabilities(AMCCOM)-Continued

SIERRA ARMY DEPOT				
Disassembly facilities	**Washout**	**Deactivation furnace**	**Detonation**	**Open burning**
Bldg 403-10,800 sq ft. Partial center substantial dividing wall with operational bays. Power conveyors. Powder collection system. APE disassembly and breakdown equipment. Bldg 640- 20,520 sq ft. Center substantial dividing wall with operational bays. Power conveyors. Powder collection system. APE disassembly and breakdown equipment.	None. .	APE 1236 W/KIT E010 Deactivation furnace operation licensed by State of California Lassen County.	14 detonation sites with electrical firing system *Local detonation restriction- 10,000 lb. Detonation and open burning operations licensed by State of California, Lassen County.	Open burning site. Open burning restriction: Limited to explosives and explosive contaminated combustible waste.

*10,000 pounds per shot, number of shots per day limited only by time required to set up shots and clean the air. Normal operation calls for 1 - 14 shots at one minute intervals starting from 1430 to 1530 each weekday.

TOOELE ARMY DEPOT				
Bldg 1375- 22,264 sq ft. Center substantial dividing wall with operational bays. Power conveyors. Powder collection system. Full complement of APE disassembly and breakdown equipment. Bldg 1303- Disassembly barricade for remote, disassembly/sectioning munitions with power hacksaw. Closed circuit television.	Bldg 45- APE 1300 Plant is operational. Requires charcoal filter system.	North area- Bldg 1320 APE 1236 W/KIT E010 South area- APE 1236 W/KIT E010 Cross Flow Scrubber or Dry Particulate Control System.	North area- 9 detonation sites with electrical firing system. Detonation restriction: 592 lb maximum above ground; 5000 lb below ground with 7 feet earth cover. Each detonation is dependent on weather conditions, wind direction, temperature, inversion layer, and air quality. South Area: 24 detonation sites with electrical firing system. Detonation restriction: 592 lb maximum above ground; 10,000 lb below ground with 10 feet earth cover.	North Area: Open burning sites available. South Area: Open burning sites available.

Table 9-2. Conventional Ammunition Demilitarization Facilities and Capabilities(AMCCOM)-Continued

UMATILLA DEPOT ACTIVITY				
Disassembly facilities	**Washout**	**Deactivation furnace**	**Detonation**	**Open burning**
Bldg 614-16,500 sq ft. Center substantial dividing wall with operational bays. Power conveyors. APE disassembly and breakdown equipment. Bldgs 601-606- Disassembly barricade for remote disassembly (television not operational). Bldg 608-18,400 sq ft. Essentially same configuration as Bldg 614 with same equipment and use.	Bldg 487- APE 1300 Plant w/o water treatment system. Requires refurbishing, operational checkout and new boiler system. System requires water treatment and charcoal filter system.	Bldg 206- APE 1236 W/KIT E010	24 detonation sites. Detonation restriction: 50 lb above ground; 100 lb with 2 ft. earth cover.	Open burning site.
			Oregon Department of Environmental Quality currently permits open burning/open detonation to be conducted in accordance with Utah Study criteria. However, open burning/open detonation future operation is under review by Department of Environmental Quality.	

munitions. A fluidized bed incinerator is undergoing modifications and is not yet operational.

i. ANICCOM installations' facilities capabilities are detailed in table 9-3.

j. Demolition ranges available to the Air Force and the Navy installations are detailed in Joint Conventional Ammunition Program Coordinating Group Demilitarization/Disposal Handbook, Vol IIA, d. Mar 85.

k. Army OCONUS capabilities summary are detailed in table 9-4.

9-4. WESTERN DEMILITARIZATION FACILITY, HAWTHORNE NEVADA

a. Introduction. The Western Demilitarization Facility i: s located between the existing depot and the south shore of Walker Lake. Details of this facility and how it will serve the US Defense Establishment are described below. Site plan showing location of all principal buildings, roads, and rail lines is presented in figure 9-2.

b. Background. The present capability for demilitarization consists of small units in scattered locations around the country. These units are quite old, tend to be makeshift, and some processes do not meet today's environmental standards. This points up the need for modern centralized facilities.

c. Requirements. It was required that the new demilitarization facility exhibit these capabilities:

(1) Demilitarize all conventional ordnance items in the Department of Defense Inventory.

(2) Be of the latest state-of-the-art using only proven technology.

(3) Maximize the economic return on recoverable materials.

(4) Meet all federal, state, and local environmental standards.

(5) Guarantee the safety of the workers involved.

d. Overview. The Western Demilitarization Facility consists of nine operating buildings, five storage magazines, an administration building, a boiler facility and water treatment plant with three water storage ponds. The buildings are spaced so that a major explosion in any one building cannot set off a sympathetic explosion in another building. The facility is connected to the main depot by two rail lines and two truck roads. A conventional road goes around the perimeter of the facility. The operating buildings are connected by a driverless tractor network so that ordnance items may be transferred by remote control. In general, ordinance arrives by way of truck and railroad, serving the off-loading dock where they are transferred to the preparation building for uncrating and disassembly. The resulting materials and component parts are then transferred to other operating buildings for further processing.

e. Off-Loading Dock. The Off-loading dock has two revetted chambers capable of accommodating either freight cars or trucks. The chambers are rated at 40,000 pounds of TNT. A detonation of this quantity in one cell would not cause a sympathetic detonation of explosives in the other.

f. Preparation Building. Materials from the off-loading dock arrive by driverless tractor at one end of the building. Here the material is unloaded and unpacked. Materials are then processed through one or more of the six work cells. All operations are remotely controlled from consoles in the control room on the other side of the building. Typical operations are pull-apart of gun ammunition, depriming of cartridge cases, collection of smokeless powder, and defuzing of projectiles. Bulk smokeless powder is transported by belt conveyor from cell No. 5 to the smokeless powder accumulation building. All other materials are loaded onto driverless tractor carts in the other end of the building.

g. Smokeless Powder Accumulation Building. Small-grain smokeless powder comes to this building by vacuum line and is collected in bag filters. Large grain powder comes by conveyor and is collected in hoppers. All powder is weighed, packaged, and hauled off by truck for resale or for use in the large item flashing chamber.

h. Mechanical Removal Building. The building is used for miscellaneous mechanical demilitarization operations including punching, shearing, sawing, and defuzing.

i. Large Cells. The three cells are rated at 3,000 pounds of TNT each, and are located near the mechanical removal building. Operations in the cells are remotely controlled from the control room

Table 9-3. Conventional Ammunition Demilitarization Facilities-an a Capabilities(DESCOM)

CRANE ARMY AMMUNITION ACTIVITY				
Disassembly facilities	**Washout**	**Deactivation furnace**	**Detonation**	**Open burning**
Bldg 146- Substantial dividing walls separate operational bays. Power conveyors. Powder collection system. Disassembly and breakdown equipment.	Steamout Facility operational with pollution abatement. Washout Plant operational (high pressure), Pollution abatement not required.	2 Deactivation Furnaces with pollution control systems. 1 Small Primer Popping Furnace with air and water pollution control systems. FY80 1 APE 1236 Furnace with KIT E010 Air Pollution System. Has been deferred due to lack of need per Indiana Air Pollution Control Board.	30 Detonation Sites with the following restrictions: 500 pounds per site with earth cover. Existing environmental constraint of open demolition area is variance from Indiana Air Pollution Control Board which is renewed annually.	1 Large Site with 7 burning Hawk Missile Motors. Presently inactive-used for explosive smokeless or detonation by flashing. 2 Primer pits 1 Incinerary pit 1 Burning cage 3 Surface impoundment 7 Burning pads 2 Open pits

*CAAA is operating both explosive burning and explosive detonation sites under the provisions of APC-2, the Indiana Air Pollution Regulation that allows open burning and/or detonation of hazardous material. The permit (called a variance) that allows CAAA to operate these facilities is renewable on a calendar year basis. CAAA has been assured that the EPA has approved Indiana's SIP, and that the state APCB expects to continue renewing the permit indefinitely.

HAWTHORNE ARMY AMMUNITION PLANT				
Bldg 117-10* 60MM thru 6" projectiles/all cartridge cases. Bldg 117-8* 8" thru 16"/50 projectiles/large items, bombs, mines, torpedoes, warheads, etc. Bldg 117-9* Miscellaneous small explosive items.	Bldg 117-5* Melting of main charge explosive in steam chambers. Small to large explosive items. Bldg 117-6* North Tower Meltout/washout of large explosive items. Bldg 117-6* High pressure washout for Comp A-3 loaded projectiles. Hot water washout for Expl "D' loaded items.	Bldg 102-31* 2 Deactivation Furnaces Bldg 117-3* 2 Deactivation Furnaces 1 Flashing Furnace Bldg 117-4* 2 Bulk Explosive Incinerators rated at 550 pounds explosives burning capacity per hour each Bldg 117-15* 1 Large Items Flashing Chamber.	20 Detonation Sites Detonation restrictions; 3,000 pounds above ground per site with sequential detonations. No current environmental restrictions on open detonation of explosive loaded items.	2 Open Burning Areas Current environmental restrictions: No burning of materials containing Phosphorus or Beryllium compounds.

* Items meet or exceed all known safety and environmental requirements.

ED_001691B_00007347

MCALESTER ARMY AMMUNITION PLANT				
Disassembly facilities	**Washout**	**Deactivation furnace**	**Detonation**	**Open burning**
Bldg 100- Disassembly breakdown and primer punch out of cartridge case of small arms ammunition including 20mm and 40mm. Bldg 126 & 130 Disassembly and defuzing of projectiles/ warheads (3 inch, 5 inch, 6 inch, 90mm, 120mm, 5-inch Rocket Warhead.) Bldg 198 & 201 Disassembly, breakdown and defuze (2.75 Rocket Warhead, 75mm, 5-inch Rocket Warhead, 5-inch Rocket Motor, 4.2 Mortar). Bldgs 109-111- Disassembly, breakdown, and defuzing of large projectiles (8 inch thru 16 inch). Bldg 205- Disassembly, breakdown, and defuzing of large projectiles (6 inch, 8 inch, 16 inch).	Bldg 186- Disassembly and steamout plant operational (40mm, 75mm, 90mm, 105mm, 106mm, 120mm, 60mm, 81mm, 4.2 inch, 2.75, 5 inch). Pollution abatement not required. Bldg 445- Washout plant non-operational (8 inch, 16-inch projectiles). Pollution abatement not required.	Bldg 452- Deactivation furnace APE 1236 with KIT E 010 Air Pollution System has been installed to Demilitarize Small Arms Ammunition, Primers, Fuzes, Boosters, and Detonators. Bldg 662- Small Arms and Primer Popping Furnace not operational (75% complete) pending completion of equipment installation of pollution control system.	52 detonation sites. Detonation restriction: plant imposed explosive limit 150 pounds with 15 feet embankments and 4 feet earth cover 500 lb explosive limit has been approved for the demolition range.	Open area. Burning restriction: Open burning plant limitation to explosives, explosive materials, and pyrotechnic flares.

USE EXISTING LAP FACILITIES FOR DISASSEMBLY AND BREAKDOWN.

ED_001691B_00007347

Table 9-3. Conventional Ammunition Demilitarization Facilities and Capabilities(DESCOM)-Continued

PINE BLUFF ARSENAL				
Disassembly facilities	Washout	Deactivation furnace	Detonation	Open burning
Current demilitarization capability is limited to white phosphorus (WP) munitions. The existing WP Demilitarization Facility Capability includes equipment and tooling for removal of WP from a variety of munitions. Operational limitations require equipment modifications for M34 Grenade M110, 155mm WP and CBU-12 and CBU-22 together with refurbishing line operation equipment. There is a WP Demilitarization and Download Facility, Incinerator Cluster together with supporting pollution abatement systems which provides a demilitarization capability for non-toxic chemical munitions. 1. Incinerator complex: a. Rotary Kiln Furnace with After Burner Scrubber System. b. Chain Grate Conveyor Furnace with After Burner Scrubber System. c. Fluid Bed Incinerator with Scrubber System and Associated Slurry Preparation. 2. Download Facility 3. WP Demilitarization Facility 4. Colored Smoke Demilitarization Facility.				No open burning as established by 1977 Clean Air Act. The Arkansas Air Pollution Control Code requires a state permit to open burn. No permit has been applied for all white phosphorus waste being held pending completion of the incinerator complex.

Table 9-4. Army OCONUS Capabilities Summary

Location	EOD Capabilities	Deactivation Capabilities	Detonation Capabilities	Open Burning Capabilities
ITALY	Very limited	None	None	None
GERMANY				
Miesau	None	APE 1236 W/KIT E010	None	None
Baumholder	Very limited	None	600 lb limit 1/2 day/month	600 lb limit 1/2 day/month
Grafenwohr	Very limited	None	500 lb limit	Very limited
UNITED KINGDOM				
Caerwent	None	None	None	Propellant up to 1/2 kilo
Otterburn	None	None	6 detonation sites 150 lb limit	None
SPAIN	Very limited	Furnace to be installed - 1984	Very limited	Very limited
HAWAII	Very limited	APE 1236 to be installed by FY 1985 W/KIT E010	None	None
JAPAN				
Marine base	Capability	25 lb limit	None	
Mt Fuji	Capability	Small furnace (one item at a time)	500 lb limit (not readily available)	None
PHILLIPPINES				
Subic Bay	Capability	APE 1236 W/KIT E010	25 lb limit	Limited
KOREA	Demil by Korea EOD	None	None	None
ALASKA				
Ft Richardson	Capability	APE 1236 W/KIT E010	None	None

ED_001691B_00007347

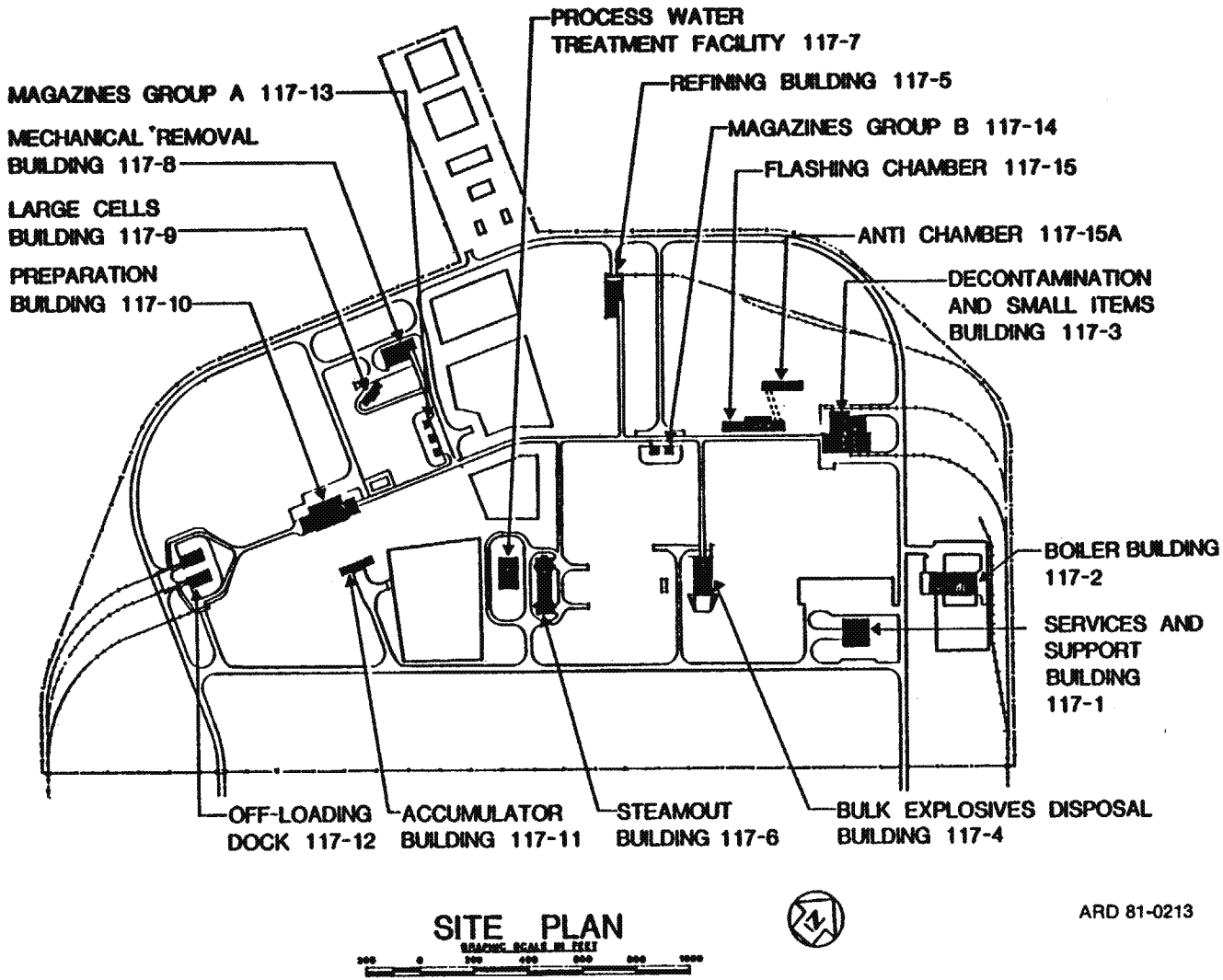

Figure 9-2. Site plan for Western Demilitarization Facility showing locations of all principal buildings, roads, and rail lines.

in the mechanical removal building. One cell will house a major caliber defuzer capable of defuzing projectiles up to 16 inches in diameter. The other two cells will contain large band saws for sawing mine cases, depth charges, and large rockets.

i. Refining Building. It is desirable to recover explosives from ordnance items without contamination from steam or water. This is accomplished by a "melt-out" process in which live steam is applied to the outer surface of the item. In the refining building, racks containing the ordnance items are lifted to the top deck by overhead crane and placed in steam enclaves. The molten explosive is collected in hoppers and poured into a "flaking" conveyor where it solidifies into small pieces. The pieces are packaged and hauled away by driverless tractor for storage and resale.

k. Bulk Incinerator Building. Certain explosive materials have no reuse or resale value and must be disposed of by incineration. These materials are moved by driverless tractor to the bulk incinerator building in 55-gallon drums where they are ground up and mixed with water to form a slurry. The slurry is then pumped to two rotary kilns for incineration. An afterburner is provided to reduce the contamination of the resulting smoke. The smoke also passes through a bag filter. Each incinerator can consume 550 pounds of explosive per hour.

l. Washout/Steamout Building. The washout/steamout building has two towers, each of which has an overhead crane. Large items such as mines and depth charges are lifted to the upper work deck and washed or steamed out. The explosive flows by gravity down through a dryer and onto a flaking conveyor and then is packaged for storage or incineration. A water treatment facility is located adjacent to the washout/steamout building. All process water used will be filtered and recycled.

m. Decontamination Building. The decontamination building contains three rotary furnaces similar to APE 1236. They are used to demilitarize complete rounds of small caliber ammunition, fuzes, and primers. In order to insure that metal parts sold for scrap are completely free from explosive contamination, they must be flashed by raising them to a temperature higher than that necessary to cause the explosive to burn. Medium caliber projectiles are loaded onto racks and moved by an overhead conveyor through a flashing furnace and then past a water spray for cooling. Items too large for the conveyor are located onto steel carts and moved into the large items flashing chamber where a powder train is used for flashing. Bag house filters are used to remove any particulates from the smoke resulting from all incineration operations.

n. Administration Building and Boiler Building. The administration building will house offices, a cafeteria, a quality assurance laboratory, and a boiler facility which can be fired by either coal or oil, and has three boilers, each capable of generating 5,00 pounds of steam per hour. Effluent air from the facility is filtered through a series of baghouses before being released to the atmosphere.

o. Magazines. Five magazines are provided for short-term storage to support operations. These magazines are of conventional design.

CHAPTER 10

NEW TECHNOLOGY

10-1. GENERAL

a. Public Laws and implementing regulations have established new directions, standards, and guidelines which govern the environment in which demilitarization and disposal (D/D) is conducted. Much of the existing and proven D/D technology is becoming obsolete in whole, or in part, and new initiates are required. The Resource Conservation and Recovery Act (RCRA) (PL 89-272, as amended by PL 91-512, PL 93-611, and PL 94-580) will ultimately have the greatest impact because its principal thrust is to conserve resources and to recover resources for reutilization.

b. Generally, there is adequate technology to perform the traditional types of D/D, i.e., open burning, open detonation, washout, and deactivation furnace. There are controversies over the extent to which open burning and open detonation will continue to be viable. However, one state announced that it was suspending its agreement with an installation pending a definitive re-examination of the materials involved and the emissions created.

c. With the new regulatory emphasis outlined in paragraph 10-2, below, it is no longer possible to conduct D/D operations in the same manner and with the freedom of action with which these activities were conducted in the past. In particular, open burning and open detonation as methods of disposal can be expected to receive increasing scrutiny from regulatory agencies and become progressively more difficult to Justify, Because of the unique characteristics of ammunition, it is unlikely, however, that disposal by open burning and open detonation will completely disappear as viable disposal alternatives. It is in the best interest of the Military Services at all levels to recognize these D/D limitations, identify those processes which do not conform to these limitations, and actively pursue alternatives designed to achieve D/D within regulatory constraints.

d. There is a substantial list of ammunition items in the demilitarization inventory which have no other D/D method than open burning and open detonation. These range from munitions employing riot control agents, various kinds of explosives, and propellants to fire bombs, cluster bombs, and improved conventional munitions. Some of these munitions have only recently entered Field Service Stocks. The number of these items consigned for D/D is expected to grow. The need for alternative methods of D/D is well established.

e. A large number of concept proposals have been identified in a review conducted by the Joint Conventional Ammunition Program (JCAP) Demilitarization and Disposal Group (JCAP Demilitarization Technology Report, May 1980) which recognize and propose technology concepts to meet most of the problem areas identified. This report serves as a data base of ongoing Research, Development, Test and Evaluation (RDT&E), military construction and engineering projects directed toward new or improved disposal techniques, analysis of these projects, distribution of information and coordination, These concept proposals can assist the ammunition R&D program manager to implement the Joint Regulation discussed in paragraph 10-7, below, as it relates to integrating D/D plans into item/system support packages.

10-2. ENVIRONMENTAL REGULATIONS

a. A series of Public Laws have been enacted which establish new directions, standards, and guidelines relating to the environment. Public Law 94-580, perhaps more than any of the others, changes the direction of D/D technology because it mandates resource conservation and recovery. Since D/D technology historically was oriented at destruction, the enactment of Public Law 94-580 has resulted in a considerable amount of proven D/D technology becoming obsolete. Thus, the continued use of that obsolete technology does not satisfy the new requirements for recovery and reutilization.

b. The Public Laws referred to are summarized as follows:

(1) National Environmental Policy Act (PL 91-910).

(2) Clean Air Act (PL 91-604, as amended by PL 92-157, PL 93-15, PL 93319, and PL 95-95).

(3) Resource Conservation and Recovery Act (PL 89-272, as amended by PL 91-512, PL 93-611, and PL 94-580).

(4) Federal Insecticide, Fungicide, and Rodenticide Act (PL 92-516, as amended by PL 94-140 and PL 95-396).

(5) Safe Drinking Water Act (PL 93-523, as amended by PL 95-190 and PL 96-63).

(6) Noise Control Act of 1972 (PL 92-574, as amended by PL 94-301 and PL 95-609).

(7) Toxic Substances Control Act (PL 94-469).

10-3. ENVIRONMENTAL REGULATION COMPLIANCE

a. Operations should be conducted in compliance with current environmental regulations implemented by federal, state, and local governments. The impact of these regulations will not be the same at each installation due to differences in the material being processed, geographic make up, meteorological conditions, and differences among state/local regulations, Vigilance must be constantly exercised to be aware of changes being imposed in current federal, state, and local regulations in order to be in compliance at all times. Exemptions to Environmental Regulations are not allowed for CONUS operations. OCONUS operations will comply with the environmental laws of the country in which the installation is located.

b. Consideration must be given to controls when performing operations which affect air, soil, surface water, and ground water. Government installations require permits to perform demilitarization/disposal operations by either open burning or detonation, The responsible environmental office must verify that specific requirements and limitations are met. Limitations and restrictions contained in those documents will be put into an environmental portion of the local Standing Operating Procedure (SOP). The following must be addressed:

(1) Insure that appropriate environmental permits, licenses, or exemptions are available at the operating locations.

(2) Temperature, cloud coverage, wind direction and velocity, and authorized operating time of day will be obtained and integrated into daily operations.

(3) Logs of materials open burned or detonated will be maintained as required by Environmental Regulatory Authority permits, licenses, or exceptions.

(4) Storage and disposition of "wastes" will be in compliance with Resource Conservation and Recovery Act and associated Federal and State regulations.

(5) Toxic materials, hazardous wastes, and heavy metals are defined by EPA in Federal Register, Vol. 45-No. 98, Book 2; pages 33066-33253. Materials involved in the Demilitarization and Disposal Activity should be listed and disposal precautions and controls given.

Material AMT Per-Round Disposition

(6) Demilitarization/Disposal procedures by open burning/detonation should identify and quantify all known combustion products and their toxicity data.

c. Operations should be planned to eliminate or restrict to an acceptable minimum any procedures which would produce residues or emissions hazardous to health or environment. -Residues created must be disposed of by a safe and environmentally acceptable means. Fugitive emissions must be dispersed in such a manner that personnel health and the surrounding ecology will not be adversely affected.

d. Technical assistance with respect to these health and environmental restrictions can be obtained from the US Army Environmental Hygiene Agency, ATTN: HSE-E, Aberdeen Proving Ground, MD 21010.

10-4. RECLAMATION AND REUTILIZATION OF RESOURCES

The requirements of Public Law 94-580, Resource Conservation and Recovery Act (RCRA) requires rethinking of demilitarization and disposal technology. Compliance with RCRA will have a substantial impact on much of the existing demilitarization and disposal technology. Some of the materials in ammunition in the demilitarization inventory have a recovery value substantially in excess of the original cost of the entire item. This results from significant increases in material costs since the date of manufacture. A prime example is the dye components in smoke grenades. Their recovery and reutilization could reduce the cost of materials for current or future production requirements.

10-5. EXISTING EQUIPMENT AND PROCESSES

The majority of the following equipment and processes have been tested and are currently available for use. These are in addition to those items of equipment described in other chapters.

APE 2048, Flashing Furnace

Ammunition Shear Machine

Projectile Saw Machine

Cavijet for Washout of Case

Bonded Missile Motors

Fluidized Bed Incinerators

10-6. FLUIDIZED BED INCINERATORS

The Fluidized Bed Incinerator, with its support equipment, is a versatile and effective facility which offers many advantages in burning waste materials.

a. A Fluid Bed Burner is a large, refractory lined vessel with an air distribution member or plate in the bottom, a hot gas outlet in or near the top and some provisions for introducing fuel. The actual fluidized bed is formed by blowing air up through a layer of inert particles at a rate that causes the particles to go into suspension and continuous motion--analogous to a boiling liquid but with solid particles, therefore, the term "Fluid Bed". It should be noted that the media used in the burner remains as a granular solid. The material to be used as a fuel is introduced into the preheated bed, either from the top or by pneumatic injection into the fluidized bed. Material may also be fed into the bed as a slurry.

b. Material to be consumed may either be fed in bulk to the fluidized bed by conveyor, or injected into the bed in the form of a sludge or slurry. Material fed in bulk needs little or no preparation. However, materials fed in sludge or slurry form require special preparation, handling, and feed facilities. Equipment required would consist of a shredder and/or a mill facility, a mixing and injection system, and a control system. It should be noted that the slurry feed system is required to capitalize on the high efficiency and special design features that the fluidized bed incinerator has to offer.

c. Fluid bed burners provide the most benefits when deriving energy from problem fuels, These fuels are typically characterized by high moisture levels, slow burning rates (such as char), large material size or high inert levels. Successful testing has been conducted on such diverse fuels as high sulfur coal, petroleum coke, wood waste, municipal solid waste, sewage sludge, and chemical waste utilizing fluid beds of sand and limestone.

10-7. DESIGN FOR DEMILITARIZATION

a. On 15 November 1977, the Joint Logistics Commanders approved a Joint regulation governing the development of D/D plans and procedures for new or modified ammunition items (NAVMAT Instruction 8027.1, AFLC/AFSC Regulation 136-5, and DARCOM Regulation 75-2). This regulation established Joint DARCOM/NMC/AFLC/AFSC D/D policies, responsibilities, and procedures relating to all developmental phases and release for production of new or modified ammunition items. This regulation reflects the growing concern for environmental quality and provides sufficient flexibility for meeting requirements which may arise in the future, The regulation requires that.

(1) D/D considerations are an integral part of the planning and decision-making processes for all new or modified ammunition items from conception to final acceptance of the end item.

(2) Provisions for review and approval of D/D considerations and plans are in accordance with program management procedures and in all instances prior to operational test and evaluation (OT&E).

(3) Procedures are developed and tested which will permit D/D in accordance with applicable environmental requirements prior to inventory production decisions.

(4) A hazard analysis is conducted and subjected to a formal review cycle so that safety is a primary consideration in the D/D procedures developed.

(5) Maximum attainable recycling of resources contained in ammunition is achieved.

b. The JCAP D/D Group has prepared a Data Item Description (DID) and has initiated staffing and approval. This DID is required for a standardized input of data regarding demilitarization plans on future contracts for ammunition end items.

CHAPTER 11

DEMILITARIZATION ACCOUNT

11-1. FORECASTING AND BUDGETING

a. Forecasting Other Service Requirements.

(1) A five-year forecast of conventional ammunition demilitarization requirements is provided to ARRCOM annually by the other services (Navy, Marine Corps, and Air Force) during the March/April time frame. This data represents demilitarization workload that will be performed by the Army on a common service (non-reimbursable) basis according to its charter as Single Manager for Conventional Ammunition as governed by DOD 5160.65. These forecasts categorize projected workload in broad homogeneous groupings, such as small arms, bombs, mines, etc,; quantify each grouping in tons, and generally identify the sources from which the assets will be generated (East or West coast facilities or Army Storage sites).

(2) From this input, ARRCOM, utilizing historical experience and its demilitarization cost module, develops gross cost estimates for accomplishing the workload, and determines, based on the facilities capabilities and shortest shipping distance, the probable site, i.e. ARRCOM plant/arsenal or DESCOM depot.

b. Forecasting Army Requirements for Depots. Army conventional ammunition demilitarization requirements to be accomplished in DESCOM depots are developed by ARRCOM from projected generations of excess, unserviceable or obsolete materials and are, similarly, processed, as above, to determine estimated demilitarization cost. While this forecasting process is admittedly fraught with uncertainties and cannot be expected to identify, with any degree of precision, specific items that will require demilitarization much beyond the immediate time frame, it is nonetheless capable of portraying annual levels of effort that can be expected with reasonable accuracy.

c. Forecasting Army Requirements for ARRCOM Plants and Arsenals. Since a substantial backlog of demilitarization material is already on-hand within the ARRCOM plants and arsenals, workload forecasts for these facilities, up to their level of annual capacity, can be developed on a line item and quantity basis from lip account asset records (JCAP Demilitarization/Disposal Inventory Handbook).

d. Budgeting for ARRCOM. The combined Army and other services demilitarization requirements to be performed in the ARRCOM plants and arsenals are included in the ARRCOM budget submissions, COB and five year impact memorandum, to DARCOM. Markup of these submissions by DA/DARCOM establishes the level at which the program can be financed during execution year and provides planning guidance for the budget and out-years. An execution year ceiling corresponding to this markup is included in the DARCOM OMA allotment to ARRCOM and becomes the basis for implementing the program. Installation workload is authorized on a comparative priority basis. The mechanics of the workloading process will be described in subsequent paragraphs.

e. Budgeting for DESCOM. Demilitarization requirements identified for accomplishment within the Army Depot System are forwarded to DESCOM for inclusion in their budget submissions. Although funding to support these requirements is allotted directly to DESCOM by DARCOM, actual workloading of individual depots is accomplished by ARRCOM.

11-2. INSTALLATION WORKLOADING AND FUNDING

a. ARRCOM Plants/Arsenals.

(1) The DARCOM allotment of demilitarization resources to ARRCOM supports Radioactive Waste disposal contracts and the headquarters personnel who administer the program, demilitarization of small

arms weapons at Rock Island Arsenal, and conventional ammunition demilitarization at Crane AAA, McAlester AAP, Hawthorne AAP, Pine Bluff Arsenal, Rocky Mountain Arsenal, and on occasion at some of the 23 GOCO ammunition production facilities. Radioactive Waste contracts and personnel, as well as the small arms weapons demilitarization program are fully funded from available resources and require approximately $500K annually. The balance of the demilitarization allotment is equitably distributed to all performing installations involved in conventional ammunition demilitarization in order to insure that each facility is effectively utilized. The level of funding allocated to each is determined by both the priority of items on their planned schedule and the capacity of their facility.

(2) ARRCOM funding is transmitted to the installations involved in conventional ammunition demilitarization via DARCOM Form 1095. To minimize the quantity of orders needed to implement the program and for which separate accounting records must be established and maintained at the headquarters, the funding documents identify and support the specific demilitarization processes that will be employed at each installation, rather than individual line items. Examples of these processes are: Open burning/detonation; deactivation furnace operations; breakdown and washout/steamout; disassembly and fluidized bed disposal, etc. On each order a list of items by DODAC's to be disposed of by the process are identified. Individual work authorizations, however, are issued to the installations for each line item CDODAC) to be demilitarized. These work authorizations contain DODAC, item nomenclature, quantity, unit demilitarization cost, unit weight, total funds authorized, schedule and specific technical instructions using the latest DMWR, SOPR, LOI, TM, or TO as a basis that will be followed in accomplishing the project. The work authorization is a product of a local computer program Conventional Ammunition Workloading Management Information System (CAWMIS), which maintains a complete record of all active demilitarization orders, Input to the system is prepared by DRSAR-MAB, the ARRCOM program manager for demilitarization. The CAWMIS program generates either hardcopy work authorizations for dispatch to non SPEEDEX installations or card/tape authorizations for autodin transmission to SPEEDEX serviced activities. In either instance, the work authorization conveys authority to commence the specified demilitarization operation and requires establishment of individual accounting records for each order in the local cost system. Cards/Tapes transmitted to these installations are in a SPEEDEX compatible configuration and in input ready format to facilitate establishment of a Project Cost Number (PCN) in their accounting system for accumulation of costs and accomplishments on each order.

(3) Each work authorization is assigned a unique fourteen digit Procurement Request Order Number (PRON) for identification purposes similar in construction to those used throughout DARCOM on the DARCOM Form 1095. The five digit serial number portion of the PRON is assembled by utilizing a numeric one or two in the first position to identify either DESCOM depot or ARRCOM plant/ arsenal workload, respectively, and the four digit DODIC of the NSN being authorized for demilitarization is entered in the remaining positions. Each work authorization also includes a customer order control number. The PRON number of the DARCOM Form 1095 funding document is entered in this field and provides correlation between the work authorizing and funding documents.

b. DESCOM Depots.

(1) Annual OMA demilitarization funding allotted to DESCOM by DARCOM is distributed to each depot based on their historical level of yearly demilitarization workload, The DARCOM Form 1095 is the document used by DESCOM to provide incremental funding of the program by quarter. The conventional ammunition demilitarization program at the depots consists almost exclusively of disposal of demilitarization asset generations as they occur. For this reason, program specific (items and quantities) cannot be identified prior to issuance of the funding orders. As a result, a single bulk service order is issued to each depot for demilitarization program support. Workloading of these bulk orders is accomplished by ARRCOM,

(2) Demilitarization stock generations are controlled by the item managers at ARRCOM and are determined in large part by comparing item requirements (acquisition objective) with availability (present inventory posture). These generations occur as a result of excess, obsolescence, or unserviceability. For excess and obsolete items, the item manager issues a Materiel Release Order (MRO) to each of the depots where the assets are located, transferring the material out of his field service account into the 11P (demilitarization) account, Concurrently, he notifies DRSAR-MAB, the demilitarization program manager, of the transaction. The results of cyclic and special inspections of ammunition material, stored at each depot are forwarded by their quality assurance personnel to the ARRCOM item managers in the form of Ammunition Condition Reports (ACR) and are the source for identifying unserviceables. An MRO is also initiated by the item manager to transfer the unserviceable material from his field service account into the demilitarization account. A copy of the ACR on which the MRO number has been referenced is forwarded to DRSAR-MAB.

(3) Upon notification of excess or obsolete transactions or receipt of ACR unserviceables from the item manager (DRSAR-MAB) as described above for the ARRCOM plants/arsenals, inputs for each of the items and depot specifies all programs into its CAWMIS system and generates individual work authorizations. In the case of the DESCOM depots, the work authorization is produced in hardcopy form, and a copy signed by the demilitarization program manager is mailed to the performing depot to authorize commencement of demilitarization on the item. Duplicate informational copies are provided DESCOM/DRSAR-S, and ARRCOM Maintenance Engineering Division, The original is retained at DRSAR-MAB for control purposes.

(4) Authorization for small quantities with a disposal cost of less than $1000 for a single undertaking are assumed without an authorization, but are reported using as assigned Pseudo DODIC on a cumulative basis monthly in the WARS report.

11-3. ACCOUNTING AND REPORTING

a. All class V material in the special demilitarization account will be reported in accordance with AR 700-22, Worldwide Ammunition Reporting System (WARS), including supplements/revisions incorporating demilitarization.

b. This report is a management informational tool reflecting the assets, accomplishments, schedules, equivalent tonnages, estimated and actual costs of authorized programs within the current fiscal year (FY). The balance of all assets (unauthorized) in the 11P account are displayed unscheduled in the following FY of the report. Assets are arranged by DODIC and location for all DESCOM installations/ARRCOM plants and arsenals,

c. DARCOM Reg 755-3 governs the accounting and reporting requirements for Special Defense Property Disposal Accounts CSPDA) at DARCOM installations and activities satellited on those accounts for demilitarization support.

d. Accounting and reporting requirements OCONUS for material generated for demilitarization will be in accordance with theater policies and directives,

11-4. GENERATIONS

a. Ammunition is generated for demilitarization from the following sources:

(1) Shipment of wholesale stock to demilitarization as directed by an Accountable Supply Distribution Activity (ASDA).

(2) Shipment of other service/ agency materiel to demilitarization as directed by the other service/agency based on inter-service support agreements.

(3) Shipment of retail stocks (installation supply account) to demilitarization as directed by the installation accountable property officer.

(4) Shipment from a post, camp, or station to demilitarization when the

activity is satellited on the demilitarization account for demilitarization services.

(5) Shipment of wholesale stock by an installation commander within limits and under conditions in Chapter 5, TM 38-750.

b. Ammunition authorized for demilitarization is normally generated by reporting unserviceable, uneconomically repairable or obsolete ammunition to the ASDA in accordance with TM 38-750, TM 9-1300-206, or SB 742-1.

APPENDIX A
REFERENCES

A.1 SCOPE.

This appendix lists all Army regulations, field manuals, forms, pamphlets, supply catalogs, technical bulletins, technical manuals, and miscellaneous publications referenced in this manual. The publication index (DA PAM 25-30) should be consulted frequently for latest changes or revisions of references given in this appendix and for new publications relating to the material covered in this manual.

A.2 ARMY REGULATIONS.

The Army Radiation Safety Program	AR 11-9
Nuclear and Chemical Weapons and Materiel, Chemical Surety	AR 50-6
Reporting of Transportation Discrepancies in Shipments	AR 55-38
Malfunctions Involving Ammunition and Explosives	AR 75-1
Physical Security of Arms, Ammunition, and Explosives	AR 190-11
Environmental Protection and Enhancement	AR 200-1
Army Safety Program	AR 385-10
Accident Reporting and Records	AR 385-40
U.S. Army Explosives Safety Program	AR 385-64
Fire and Emergency Services	AR 420-90
U.S. Army Munitions Reporting Systems	AR 700-19
Ammunition Peculiar Equipment (APE) Program	AR 700-20
Policies and Procedures for Property Accountability	AR 735-5

A.3 DOD PUBLICATIONS.

Defense Demilitarization Manual	DOD 4160.21M-1
Single Manager for Conventional Ammunition (Implementing Joint Conventional Ammunition Policies and Procedures)	DOD 5160.65M

A.4 AMC REGULATIONS .

Demilitarization/Disposal Requirements Relating to the Design of New or Modification of Ammunition Items	AMC-R 75-2
Preparation of Standing Operating Procedures (SOP's) for Ammunition Operations	AMC-R 700-107
Safety Manual	AMC-R 385-100
Depot Maintenance Program Scheduling, Workloading, and Reporting System	AMC-R 750-28

ED_001691B_00007347

A.4 AMC REGULATIONS - Continued.

Authorizing, Accomplishing, and Reporting Demilitarization of Class V Materiel	AMC-R 755-8

A.5 MILITARY SPECIFICATIONS.

Ammunition, General Specification for	MIL-A-002550C
Inspection System Requirements	MIL-I-45208
Inspection Equipment, Supply and Maintenance of	MIL-I-45607
Depot Maintenance Work Requirements (DMWR) for Maintenance/Demilitarization of Conventional and Chemical Munitions	MIL-PRF-63012)

A.6 PAMPHLETS.

Consolidated Index of Army Publications and Blank Forms	DA PAM 25-30
Ammunition and Explosives Safety Standards	DA PAM 385-64
Index of Published & Scheduled AMC Sponsored Equipment Publications	AMC-P 25-30

A.7 MILITARY STANDARDS.

Single and Multilevel Continuous Sampling Procedures and Tables for Inspection by Attributes	MIL-STD-105D
Sampling Procedures and Tables for Inspecting by Variables for Percent Defective	MIL-STD-414
Lot Numbering of Ammunition	MIL-STD-1168A

A.8 FIELD MANUALS.

NBC Decontamination	FM 3-5
Field Behavior of NBC Agents (Including Smoke and Incendiaries)	FM 3-6
Chemical Accident Contamination Control	FM 3-21
Explosives and Demolitions	FM 5-250
Treatment of Chemical Agent Casualties and Conventional Military Chemical Injuries	FM 8-285
First Aid for Soldiers	FM 21-11

A.9 FORMS .

U.S. Army Accident Report	DA Form 285
Recommended Changes for Publications and Blank Forms	DA Form 2028

ED_001691B_00007347

A.9 FORMS - Continued.

Ammunition Condition Report..... DA Form 2415

Transportation Discrepancy Report..... SF Form 361

Report of Discrepancy (ROD)..... SF Form 364

A.10 SUPPLY CATALOGS.

FSC 1305 - Ammunition, through 30-mm; FSC 1310-Ammunition, over 30-mm up to 75-mm; FSC 1315-Ammunition, 75-mm through 125-mM; FSC 1320-Ammunition, over 125-mm; FSC 1325-Bombs; and FSC 1330-Grenades ..... SC 1305/30-IL

FSC 1340, Rockets, Rocket Ammunition and Rocket Components; FSC 1345, Land Mines; FSC 1350, Underwater Mine Inert Components; FSC 1351, Underwater Mine Explosive Components; FSC 1355, Torpedo Inert Components; FSC 1356, Torpedo Explosive Components; FSC 1360, Depth Charge Inert Components; FSC 1361, Depth Charge Explosive Components; FSC 1365, Military Chemical Agents; FSC 1370, Pyrotechnics; FSC 1375, Demolition Materiels; FSC 1376, Bulk Explosives; FSC 1377, Cartridge and Propellant Actuated Devices and Components; FSC 1380, Military Biological Agents; FSC 1385, Explosive Ordnance Disposal Tools; FSC 1386, Explosive Ordnance Disposal Tools, Underwater; FSC 1390, Fuzes and Primers; FSC 1395, Miscellaneous Ammunition; and FSC 1398, Specialized Ammunition Handling and Servicing Equipment ..... SC 1340/98-IL

A.11 SUPPLY BULLETINS.

Army Adopted/Other Items Selected for Authorization/List of Reportable Items ..... SB 700-20

Federal Supply Classification: Part I, Groups and Classes (Cataloging Handbook H2-1)..... SB 708-21

Department of Defense Ammunition Code (Cataloging Handbook H3)..... SB 708-3

Inspection of Supplies and Equipment Ammunition Surveillance Procedures..... SB 742-1

Disposition of Used Ammunition Packing Material and Certain Specified Ammunition Components ..... SB 755-1

A.12 TECHNICAL BULLETINS.

Ammunition: National Stock Numbers and Department of Defense Ammunition Codes ..... TB 9-1300-256

Safety Inspection and Testing of Lifting Devices ..... TB 43-0142

Department of Defense Ammunition and Explosives Hazard Classification Procedures ..... TB 700-2

A.13 TECHNICAL MANUALS.

Storage, Shipment, Handling and Disposal of Chemical Agents and Hazardous Chemicals... TM 3-250

Military Explosives ..... TM 9-1300-214

ED_001691B_00007347

A.13 TECHNICAL MANUALS. - Continued

Ammunition Maintenance	TM 9-1300-250
Unit Maintenance Manual (Including Repair Parts and Special Tools List) for Artillery Ammunition for Guns, Howitzers, Mortars, Recoilless Rifles, and 40-mm Grenade Launchers	TM 9-1300-251-20&P
Direct Support and General Support Maintenance Manual (Including Repair Parts and Special Tools List) for Artillery Ammunition for Guns, Howitzers, Mortars, Recoilless Rifles, and 40-mm Grenade Launchers	TM 9-1300-251-34&P
Use of Mine, Antitank: HE, Heavy, M15 as a Substitute for Charge Assembly Demolition: M37 or M183	TM 9-1375-200/2
Operator's and Unit Maintenance Manual (Including Repair Parts and Special Tools List): Demolition Materials	TM 9-1375-213-12
Direct Support and General Support Maintenance Manual (Including Repair Parts and Special Tools List) for Demolition Materials	TM 9-1375-213-34&P
Army Ammunition Data Sheets for Small Caliber Ammunition (FSC 1305)	TM 43-0001-27
Army Ammunition Data Sheets for Artillery Ammunition: Guns, Howitzers, Mortars, Recoilless Rifles, Grenade Launchers and Artillery Fuzes (FSC 1310, 1315, 1320,1390)	TM 43-0001-28
Army Ammunition Data Sheets for Rocket Systems, Rocket Fuzes, Rocket Motors (FSC 1340)	TM 43-0001-30
Army Ammunition Data Sheets for Land Mines (FSC 1345)	TM 43-0001-36
Army Ammunition Data Sheets for Military Pyrotechnics (FSC 1370)	TM 43-0001-37
Army Ammunition Data Sheets for Demolition Materials	TM 43-0001-38
Army Ammunition Data Sheets - Ammunition Peculiar Equipment (APE)	TM 43-0001-47
Destruction of Conventional Ammunition and Improved Conventional Munitions (ICM) to Prevent Enemy Use	TM 43-0002-33
Demilitarization Procedures for FSC 1040 Chemical Weapons and Equipment, FSC 4310 Compressors and Vacuum Pumps, FSC 1055 Launchers, Rockets and Pyrotechnics	TM 43-0003-27
Storage and Materials Handling	TM 743-200-1
General Instructions for Disposal of Conventional Munitions	TO 11A-1-42
Firefighting Guidance Transportation and Storage Management Data and Ammunition Complete Round Chart	TO 11A-1-46

Department of Defense Ammunition Code (Cataloging Handbook H3) ..... SB 708 3
Ammunition Surveillance Procedures ..... SB 742 1
Disposal of Supplies and Equipment: Ammunition Disposition of Used Packing Material and Certain Specified Ammunition Components ..... SB 755 1

A-5. SUPPLY CATALOGS

Ammunition and Explosives: ..... Classes 1305 thru 1330 SC 1305/30-IL
Ammunition and Explosives: ..... Classes 1340 thru 1398 SC 1340/98-IL

APPENDIX B

EXPLANATION OF TERMS

The following are descriptions of terms and phases commonly used in conjunction with ammunition, explosives, and other dangerous materials. These are listed to provide a degree of uniformity of description in the use of technical information throughout these standards.

Administration Areas--The areas in which administrative offices for the entire establishment are located. These areas differ from those directly associated with and a part of the explosive area, such as ammunition operations office.

Ammunition-Includes all non-nuclear ordnance components and explosive prepared to form a charge, complete round, or cartridge for small arms, rifle, gun, cannon, or any other weapon or explosiveactuated device, impulse device, torpedo warhead, mine, bomb, depth charge, demolition charge, fuze, detonator, projectile, rocket, or guided missile. Ammunition also includes all solid propellants, explosives, hypergolic liquids, propellant systems, and other hazardous materials applied to ordnance uses and requiring surveillance for reasons of explosive safety, all JATO's, boosters, sustainers, military pyrotechnics, and chemical/biological systems, and materials.

Ammunition Operations Office-Any office, exclusive of the main administrative area adjacent to or within an explosive area, in which operational administrative functions pertaining to explosives are performed.

Barricade-An intervening approved barrier, natural or artificial, of such type, size, and construction as to limit in a prescribed manner, the effect of an explosion on nearby buildings or exposures.

Biological Agent-A solid, liquid or aerosol, which through its biological properties produces injurious or lethal effects on personnel, plants, or animals.

Blast-Brief and rapid movement of air or fluid away from a center of outward pressure, as in an explosion; the pressure accompanying this movement.

Blasting Cap--A cylindrical detonator containing one or more sensitive initiating explosives used to initiate the detonation of demolition charges. There are several types of blasting caps, as follows:

a. Electric blasting caps. These are capable of being set off by an electrical current.

b. Nonelectric blasting caps.

These are capable of being set off by a spit of fire (normally from a safety fuze).

Caution-An operating procedure, practice, etc., which if not strictly observed, could result in damage to, or destruction of, equipment.

Change House-A building provided with facilities for employees to change to and from work clothes. Such buildings may be provided with sanitary facilities, drinking fountains, lockers, and eating facilities.

Chemical Agent--A solid, liquid, or gas which through its chemical properties produces lethal or toxic effects on man, animal or plant life, or produces an incendiary action or screening or signaling smoke.

Chemical Ammunition-Ammunition, the filler of which is primarily a chemical agent.

Clearance-An authorization to conduct a test, to enter or exit from a danger area, or to conduct work in a danger area. Clearance may be granted only by the safety observer having jurisdiction over the danger area in which the operation is to be conducted.

Compatibility-Ammunition or explosives are considered compatible if they may be stored or transported together

without significantly increasing either the probability of an accident or, for a given quantity, the magnitude of the effects of such an accident.

Compatible Storage-Applies to those items which may be stored together without increasing the hazard.

Component-Any part of a complete item.

Concentration-The amount of a substance, regardless of its physical state, present in a given unit volume of air. Concentration is visually expressed in milligrams per cubic meter (mg/m^3). The amount of vapor actually inhaled or absorbed by an individual is not referred to as concentration.

Contamination-The presence of or act of supplying a chemical agent in a dangerous amount of concentration on an individual, object, or area. For liquid agents, contamination is usually expressed in milligrams per square meter (mg/m^2), ounces per square yard (oz/yd^2) or tons per square mile ($tons/mi^2$).

Controlling Authority-The term controlling authority as used in these standards refers to the headquarters of the DoD Component concerned.

Conversion of Temperature-To convert Fahrenheit to Centigrade, subtract 32 from the Fahrenheit reading and multiply by 1.8. To convert Centigrade to Fahrenheit, multiply the Centigrade reading by 1.8 and add 32.

Conventional Ammunition- Non-nuclear ammunition excludes all biological ammunition and generally excludes chemical ammunition except for existing smoke and incendiary agents and agents of the riot control type.

Decontaminating Material-Any substance used to chemically destroy, physically remove, seal in, or otherwise make harmless a chemical agent.

Decontamination--The process of making any individual, object, or area safe by chemically destroying or physically removing harmful chemical agents. An object or area may be made safe for unprotected personnel by effectively sealing in the harmful agent, if it cannot be removed chemically or physically.

Deflagration-A rapid chemical reaction in which the output of heat is sufficient to enable the reaction to proceed and be accelerated without input of heat from another source. Deflagration is a surface phenomenon with the reaction products flowing away from the unreacted material along the surface at subsonic velocity. The effect of a true deflagration under confinement is an explosion. Confinement of the reaction increases pressure, rate of reaction and temperature, and may cause transition into a detonation.

Demilitarization-The act of destroying the military offensive or defense advantages inherent in certain types of equipment and material. The term encompasses disassembly and removal of explosives, mutilation, cutting, crushing, scrapping, melting, burning and dumping at sea (when authorized), or alteration designed to prevent further use of the equipment and material for its originally intended military or lethal purpose, and applies equally to material in unserviceable condition, that has been screened through National Inventory Control Point (NICP) and declared surplus or foreign excess. Demolition Explosive Charge-An intentionally placed explosive charge used under controlled conditions for a desired explosive effect.

Detonation-A violent chemical reaction within a chemical compound or mechanical mixture evolving heat and pressure. A detonation is a reaction which proceeds through the reacted material toward the unreacted material at a supersonic velocity. The result of the chemical reaction is exertion of extremely high pressure on the surrounding medium forming a propagating shock wave which is originally of supersonic velocity. A detonation, when the material is located on or near the surface of the ground, is normally characterized by a crater.

Detonator-A device capable of inducing a high-order detonation in high explosives.

Detonating Cord-A flexible tubing containing a core of high explosive which carries the detonation wave from one end to the other at approximately the

detonation velocity of the explosive in the core.

Disposal-The process of eliminating unwanted material/munition items from the inventory by redistributing, transferring, detonating, selling, abandoning, or destroying it.

Disposal Range-Any area of land which has been designated by proper authority for exclusive use in demilitarization/ disposal operations.

Dividing Wall-A wall designed to prevent, control, or delay propagation of an explosion between quantities of explosives on opposite sides of the wall.

Downwind Vapor Hazard (Quantity/Distance-The distance downwind from the munitions which exposed individuals can be expected to exhibit certain physiological effects. This distance is not only dependent on the source strength (quantity), but also upon the toxicity of the agent and the meteorological conditions at time of release.

Dud -An explosive loaded item that fails to explode when subjected to treatment that should cause it to function. A dud can be a bomb, shell, grenade, etc., that has been discharged from a weapon, dropped from a plane, or thrown by hand that failed to explode on reaching the target.

Electroexplosives Device-Any explosives device, such as blasting caps, squibs, switches, valves, igniters, etc., which is designed to be initiated by an electric current.

Electromagnetic Radiation-An energy wave consisting of electric and magnetic lines of force, as a radio wave.

Equipment-A general term including apparatus, appliances, devices, wiring, fixtures, fittings, material, and the like.

Establishment-Any plant, works, arsenal, depot, proving ground, or any other activity under control of the Army.

Exemption-A relatively long term exception to an otherwise mandatory requirement. Exemptions may be granted by law, TM 9-1300-277 by Congressional resolution, or by a finding and determination by the Secretary or Deputy Secretary of Defense, or by a Secretary or Under Secretary of a Military Department. Exemptions (except those established by Congressional action) shall be granted only when immediate corrective measures are wholly impractical, (such as where Congressional authorization to purchase real estate for adequate safety clearances has not been granted or where significant impairment of the overall defense posture of the United States would otherwise result) and only if positive programs for the eventual correction of the deficiency are being carried out. Exemptions will not be granted for a period in excess of that estimated to be required for correction of the deficiency.

Explosion-A chemical reaction of any chemical compound or mechanical mixture which, when initiated, undergoes a very rapid combustion or decomposition releasing large volumes of highly heated gases which exert pressure on the surrounding medium. Also, a mechanical reaction in which failure of the container causes the sudden release of pressure from within a pressure vessel; for example, pressure rupture of a steam boiler. Depending on the rate of energy release, an explosion can be categorized as a deflagration, a detonation, or a pressure rupture.

Explosive(s)-Materials that either detonate or deflagrate. Any Chemical compound or mechanical mixture which, when subjected to heat, impact, friction, shock or other suitable initiation, undergoes a very rapid chemical change with the evolution of large volumes of highly heated gases which exert pressures in the surrounding medium.

Explosives Area-An area specifically designated and set aside from other portions of an installation for manufacturing, processing, storing, and handling of explosives and ammunition.

Explosive Equivalent-The equivalent power of an explosive when compared to an equal weight of TNT. Usually identified as greater or less powerful than TNT and is normally identifiable to two decimal, e.g., Composition

C-4 is 1.15 times more powerful than TNT (1 pound of Composition C-4 is equivalent to 1.15 pounds of TNT).

Explosives Facility-Any structure or location containing ammunition and explosives.

Explosives Hazard--Any condition which may result in or contribute to the severity of an explosives accident or incident.

Explosives Safety Distance (Quantity Distance)-The pre-scribed minimum distance between various classes and quantities (net weight) of explosives and between such explosives and specified exposures (inhabited buildings, public highways, public railways, petroleum, aircraft, etc.) affording an acceptable degree of protection and safety.

Exposed Explosives-Those actually visible (unpackaged bulk explosives, disassembled or open components, etc.) and that also are susceptible to initiation directly by static or mechanical spark. Explosives that create, accidentally or otherwise, explosives dust or give off vapors, fumes or gases in explosive concentrations.

Field Office-An office required by operational supervision (e.g., foremen and line supervisors) in direct support of ammunition and explosives operations.

Firebrand-A projected burning or hot fragment whose thermal energy is transferred to a receptor.

Fire Hazard Area-A location in which the primary, but not necessarily the only hazard is that of fire, including explosions of gas or vapor and air mixtures.

Fire Resistive-Structures, materials, etc., designed to resist fire without becoming weakened to the point of failure.

Fire Retardant-Generally combustible structures, materials, etc., so treated or covered as to retard ignition or spread of fire.

Fire Wall/Fire Division Wall-A wall of fire-resistive construction designed to prevent spread of fire from one side to the other.

Firing Device-A device that causes the initiation of demolition charges either directly or through its effect on a blasting cap, electric squib, or detonating cord. It may be electrical, mechanical, or electromechanical.

Fixed Ammunition-Includes all but small arms and rocket ammunition. Consists of cartridge case, loaded with propellant, firmly attached to the projectile. Such ammunition is loaded in one operation into the weapon.

Flameproof-Combustible materials (e.g., clothing) so treated or coated as to decrease their burning characteristics.

Flammable-Combustible material easily ignited and which burns readily.

Flammable Liquid-Any liquid, the vapor of which will burn.

Fragment Distance-The limiting range of a considerable number of fragments from the quantity and types of explosives involved in certain explosives safety-distance (quantity-distance) tables. (Formerly referred to as missile distance for ammunition in 1.2-1.3 based on the limiting range of a considerable number of fragments for the type of ammunition involved. The distances do not take into account occasional fragments which may be projected farther. For class 1.1,the inhabited-building distance is based upon blast damage and does not represent the distance to which some fragments can be projected.

Fragmentation-The breaking up of the confining material of a chemical compound or mechanical mixture when an explosion takes place. Fragments may be complete items, subassemblies, or pieces thereof, as well as pieces of equipment or buildings containing the items.

Fuse-A slow-burning powder filled cord that carries flame through its length at a known and uniform rate per unit of length. Also known as "safety fuze", "time fuze" and "time blasting fuze."

Fuze-(Not to be confused with fuse). A mechanical electrical, or electromechanical device used to function an explosive device such as a bomb or projectile. In demolition work, a firing device may be termed a fuze.

Hangfire-See Malfunction.

Hazard-Any condition which may result in, or contribute to, the severity of an accident.

Hazard Classification-Identifies the hazardous characteristics of explosives items by assignment to established hazard categories governing storage and transportation. These categories are: Quantity-Distance Class, Storage Compatibility Group, Department of Transportation (DOT) Class, and DOT Marking.

Hazardous Fragment-A hazardous fragment is one having an impact energy of 58 foot-pounds or greater.

Hazardous Fragment Density-A density of hazardous fragments exceeding one per 600 square feet.

Hazardous Locations for Electrical Equipment-Locations where flammable gases or vapors are or may be present in the air in explosive or ignitable mixtures or where combustible dust or easily ignitable particles or fibers may be present.

Hazardous Material-Any compound, mixture, element, or assemblage or material which, because of inherent characteristics, is dangerous to manufacture, process, store, or handle.

High Explosive Equivalent or Explosive Equivalent-The amount of a standard explosive which, when detonated, will produce a blast effect comparable to that which results at the same distance from the detonation or explosion of a given amount of the material for which performance is being evaluated. It is usually expressed as a percentage of the total net weight of all reactive materials contained in the item or system. For the purpose of these standards, TNT is used for comparison.

High Explosives Equivalent or TNT Explosives Equivalent - Deleted

Holding Area--That area established, within a site, for temporary storage of munitions to be destroyed, demolition material and blasting caps. The holding area must be situated at great enough distance from the disposal point or barricaded to ensure the material stored therein is safe from premature detonation from flying debris resulting from a disposal action.

Hydrolysis-The reaction of a chemical agent or chemical substance with water, whereby decomposition of the substance takes place and one or more new substances are produced. Hydrolysis reduces the effectiveness of many chemical agents; although, in some, the resulting product of hydrolysis may in itself be a poison, as with agents containing arsenic. The rate of hydrolysis is determined by the resistance offered by a chemical agent or substance to decomposition by water.

Hypergolic-A property of various combinations of chemicals to self-ignite upon contact with each other without a spark or other external initiation.

Incendiary-Ammunition with inflammable filling.

ICM-Munitions that embody a unique design to control the number, size, and distribution of fragments produced when the item functions.

Inert-Ammunition containing no explosives or chemical agents.

Inert Area-Any area other than an explosives or ammunition area within an establishment.

Inert Components-Ammunition parts which contain no explosives or chemical agents.

Inhabited Building-Any building or structure, other than an operating building, magazine or auxiliary building, occupied in whole or part as a habitation for human beings, or a building, structure or area where people are accustomed to assemble, such as a church, schoolhouse, railroad station, and similar transportation facilities, store, theater, or factory, both within and outside Government establishments. Land outside boundaries of establishments will be considered possible sites of inhabited buildings.

Inhabited Building Distance-Inhabited building distances are the minimum distances which may be expected to protect buildings or structures from substantial structural damage (not readily repairable) from blast effect. These distances do not provide protection against glass breakage, but do provide a high degree of protection from fragments.

Intermagazine Distance-The minimum distance permitted between explosives locations, as prescribed for various types and quantities of explosives. This distance is expected to prevent propagation by blast (shock wave) and to provide a reasonable degree of protection against propagation due to fragments.

Intraline Distance-The minimum permitted (except as indicated below) between any two buildings within any one operating line. Intraline distances are also used for separating certain specified areas and locations within explosives establishments even though actual operations are not involved. Intraline distance is expected to protect from propagation of explosion due to blast effects, but not against possibility of propagation due to fragments. Buildings separated by intraline distances will probably suffer substantial structural damage.

Intraline Operations-Processes accomplished within one operating line.

Intraline Separations-The distance to be maintained between any two operating buildings and/or sites within an operating line, at least one of which contains or is designed to contain explosives.

Inversion Condition-An increase of air temperature resulting from an increase in altitude (the ground being cooler than the surrounding air). This condition is usually found on clear or partially-clear nights and early in the morning to about one hour after sunrise. There will be no convection currents and little mechanical turbulence with winds less than six miles per hour. A stable atmospheric condition such as described is favorable for releasing chemical agents for tactical purposes, but it is the most unfavorable condition for disposal purposes.

Lapse Condition-The condition in which a decrease of air temperature results from an increase in altitude (the ground being warmer than the surrounding air). This condition is usually found when skies are clear, between the hours of 1000 and 1600. During such conditions, strong convection currents may exist. An unstable atmospheric condition such as described is favorable for disposal of chemical agents for tactical purposes.

Liquid Propellants-Substances used for propulsion or operation of missiles, rockets, or related devices.

Loading Docks-Facilities at ground level or elevated structures designed and installed for transferring ammunition, explosives, and component parts thereof, to or from automotive vehicles, railway cars, and/or cargo-type aircraft.

Magazine-Any building or structure, except an operating building, used for storage of ammunition explosives or loaded ammunition components. Includes such facilities as an above-ground magazine, an igloo-type magazine, a railroad car, a motor truck, a temporary shelter, or an open storage site.

Magazine Area-A specifically designated area set aside for the primary purpose of ammunition and explosives storage.

Magazine Distance-This distance is the minimum permitted between any two storage magazines. Distance required is determined by the type or types of magazines and also the type and the quantity of ammunition or explosives from one magazine to another from blast and provides a reasonable degree of protection against propagation of explosion due to fragments. It does not, except perhaps for earth covered magazines, protect the magazines from severe structural damage.

Magazine, Earth-Covered, Non-standard-All Earth-covered magazines except Army igloo, Navy arch-type, earth-covered, corrugated steel, arch-type, and module, open storage, barricaded with earth covering equal to or greater than that required by standard igloo magazines.

Malfunction-Failure of item to function in accordance with its expected performance or functioning of the explosive components during a non-functional test.

A critical malfunction is one which may cause a hazard under the circumstances described above. For purposes of clarity, malfunctions do not include accidents and incidents resulting from negligence, malpractice, or implication in such situations as vehicular accidents, fires, etc. However, malfunctions do include abnormal or premature function of explosive ammunition items during normal handling, maintenance, storage, transportation, and tactical deployment. Includes cookoff, hangfire, misfire, etc.

Mass-Detonating Explosives-High explosives, black powder, certain propellants, certain pyrotechnics, and other similar explosives, alone or in combination, or loaded into various types of ammunition or containers, most of the entire quantity of which can be expected to explode virtually instantaneously when a small portion is subjected to fire, to severe concussion or impact, to the impulse of an initiating agent, or to the effect of a considerable discharge of energy from without. Such an explosion normally will cause severe structural damage to adjacent objects. Explosion propagation may occur immediately to other items of ammunition and explosives stored sufficiently close to and not adequately protected from the initially exploding pile with a time interval short enough so that two or more quantities must be considered as one for quantity-distance purposes.

Mass Detonation-Virtually instantaneous explosion of mass of explosives when only small portion is subject to fire, severe concussion or impact, impulse of initiating agent, or to effect of considerable discharge of energy from without. Such an explosion normally will cause severe structural damage to adjacent objects, or the simultaneous explosion of other separated ammunition and explosives stored sufficiently close to the initially exploding pile. A mass detonation, when the explosives are located on or near the surface of the ground, is normally characterized by a crater.

Measurement of Distance-Measurement of distance for determining the maximum allowable quantity of explosives shall be made from the nearest outside point or wall of the room, cubicle, or building proper involved which contains the explosives to the nearest outside point or TM 9-1300-277 wall of the other location under consideration.

Military Pyrotechnics-Ammunition manufactured specifically for use as signals, illuminants and the like.

Misfire-A misfire is a failure of an explosive to detonate after initiating action is taken. The failure may be due to a faulty firing mechanism or a faulty element in the explosive train.

Mound-An elevation of earth having a crest at least 3 feet wide, with the earth at the natural slope on each side and with such elevation that any straight line drawn from the top of the sidewall of a magazine or operating building, or the top of a stack containing explosives to any part of a magazine, operating building, or stack to be protected will pass through the mound. The toe of the mound will be located as near the magazine, operating building, or stack as practicable.

Munitions-Supplies and equipment of all kinds needed by the military services for direct military purposes.

NEG-Net explosive quantity as expressed in kilograms.

Net Explosives Weight (NEW)-The total quantity of explosives material or high explosives equivalency in each item or round to be used when applying quantitydistance criteria or other standards.

Nitrogen Padding (or Blanket)-To fill the void or ullage of a closed container with nitrogen gas to prevent oxidation of the chemical contained therein and to avoid formation of a flammable mixture, or to maintain a nitrogen atmosphere in or around an operation, piece of equipment, etc.

Noncombustible-Not combustible, nor burnable in the ordinary sense of the word.

Non-DoD Component-Any entity (Government, private, or corporate which is not a part of the Department of Defense.

Note-An operating procedure, condition, etc., which is essential to highlight.

Operating Building-Any structure, except a magazine, in which operations pertaining to manufacturing,

processing, handling, loading, or assembling of ammunition and explosives are performed.

Operating Line-A group of buildings, facilities or related work stations so arranged as to permit performance of the consecutive steps in the manufacture of an explosive, or in the loading, assembly, modification, and maintenance of ammunition.

Operational Shield-A barrier constructed at a particular location or around a particular machine or operating station to protect personnel, material, or equipment from the effect of localized fire or explosion.

Outdoor Storage Sites-Sites within the magazine area selected for outdoor storage of ammunition and in exceptional cases inert items. Outdoor storage sites may be of the following types:

a. Earth-revetted, four sides (except entrance), located between earth-covered magazines.

b. Earth-revetted, four sides (except entrance), not located between earth-covered magazines.

c. Nonrevetted, with roof covered magazines.

d. Nonrevetted, without cover, not located between earth-covered magazines.

Personnel Shelter--A shelter providing four to six-foot thick frontal protection and a minimum of two-foot thick reinforced overhead protection. Personnel engaged in demolition operations should always have ample time to reach shelter which provides splinter-proof protection.

Photoflash Devices-Photographic aids, such as magnesium flashlights, photoflash bulbs, and electronic flash attachments. Only lighting equipment bearing the label of approval of the Underwriters' Laboratories for the hazard involved will be used in photographing locations involving exposed explosives, explosive dusts, flammable gases or vapors.

Power-In relation to explosives, the term refers to relative end results. It takes into account such factors as brisance, detonation rate, cratering B-8 potential, steel penetration capability, etc.

Primer-A device or assembly used to prepare a demolition charge for firing. It may vary depending on the firing system to be employed and in some cases the type of charge to be set off.

Prohibited Area-A specifically designated area at airfields, seadromes, or heliports in which all ammunition and explosives facilities are prohibited.

Propagating Explosion-Communication of an explosion (detonation or deflagration) from one explosives source to another by fire, fragment, or blast (shock wave) where the time interval between explosions is sufficient to limit the total overpressure at any given time to that which each explosion produced independently. (This condition where detonation occurs would be evidenced by a distant shock wave from each detonation with a discernible pressure drop between each explosion.) Protected Terrain or an effective artificial barrier interposed between a propellant facility and inhabited building, or other exposure, to prevent fragments from endangering the building or other exposure.

Protective (Gas) Mask-A face mask used by personnel to protect the respiratory system against inhalation of harmful chemical agents.

Public Highway-Any street, alley, road, or navigable water open to use of the general public. Navigable water is that part of a body of water capable of navigation by barges, tug-boats, or larger vessels. Public highway distance is the minimum permitted between a public highway and an explosives hazard. Public highway distances are based on criteria similar to those applicable to passenger railroads and are identical to passenger railroad distances. Persons in the open are considered safe from the blast effects (not fragments) of explosions when separated from the explosion site by distance equal to one-half the public highway distance.

Public Railway-Any steam, electric, or other railroad which carries passengers for hire. Public railway distance is the minimum permitted between a public railway as so defined and an explosives hazard.

The distance at which cars are considered safe from the blast effects of explosions has been fixed at 60 percent of the inhabited-building distance. These decreased distances are used in tables for class 1.1 materials. The use of the lesser distances is based on the smaller height and area of railroad cars exposed to blast; the greater resistance of cars to blast as compared with buildings; and the fact that, while a building is stationary and subject to risk constantly, the presence of a train is only temporary. For other than class 1.1 materials, inhabited-building distances are required to public railways. The minimum separation between privately owned railways over which passengers are not carried, and magazines and storage sites will be not less than 400 feet unless the public railway distance specified in the appropriate quantity-distance table is less. However, the railways must be separated by public railway distances from operating buildings.

Public Traffic Route-Any public street, road, highway, navigable stream, or passenger railroad.

Pyrotechnic Material-Explosive or chemical ingredients, including powdered metals, used in manufacture of military pyrotechnics.

Quantity-Distance-The quantity of explosives material and the distance separation relationships which provide defined types of protection. These relationships are based on levels of risk considered acceptable for the stipulated exposures and are tabulated in the appropriate quantity-distance tables.

Rail Holding Yard-A railroad yard used for storing of loaded cars for indefinite periods of time.

Restricted Area-Any area, usually fenced, at an establishment where entrance and egress of personnel and vehicular traffic are controlled for reasons of safety and security.

Revetment-An explosives location barricaded on at least three sides. The revetment may or may not incorporate a structure or an overhead cover.

Riot Control Agent-A chemical that produces temporary, irritating, or disabling effects when in contact with the eyes or when inhaled.

Rocket-A complete missile which derives its thrust from ejection of hot gases generated from propellants in the motor.

Safety Distances-Safety distances are empirical distances in relation to quantity of explosives, and are the minimum permitted for separation of facilities within a hazard area, of possible explosions of the explosive hazard from inhabited buildings, public railway, and public highways, in order to control the magnitude of damage, loss of life, and serious injuries. Separation distances are not absolutely safe distances but are relatively protective or safe distances. Greater distances than those shown in the applicable tables should be used whenever practicable.

Semifixed Ammunition-Ammunition loaded into the weapon as a unit. The cartridge case is loose-fitted over the base of the projectile so that the propelling charge may be adjusted for zone firing.

Separate-Loading Ammunition-Ammunition whose major components projectile, propelling charge and primer are issued unassembled and are loaded into the weapon separately.

Separated-Loading Ammunition-Ammunition consisting of a projectile and a primed cartridge case containing propellant. The propelling charge is not adjustable for zone firing.

Service Magazine-Auxiliary building used for intermediate storage of explosives materials not exceeding the minimum amount necessary for safe, efficient production.

Simultaneous Detonation-Detonation of separated quantities of explosives or ammunition occurring so nearly at the same time that the effect on the surroundings is the same as though the several quantities were not separated and were detonated en masse.

Single-Revetted Barricades-A mound which has been modified on one side by a retaining wall, preferably of concrete, of such slope and thickness as to hold firmly in place the 3-foot width of earth required at the top, with the earth at the natural angle on one side. All other

requirements of a mound will be applicable to the single revetted barricade.

Site-The locations within a range which are reserved exclusively for use in conducting specific functions involving munitions. A range may have one or several sites, i.e., disposal, training, bombing and gunnery, etc.

Small Arms Ammunition-Ammunition for small arms, i.e., all ammunition up to and including caliber .60, and all gauges of shotgun shells.

Solid Propellants-Low explosives used to propel projectiles, rockets, etc., and to generate gases for powering auxiliary devices.

Standard Igloo Magazine-An earth-covered, arch-type magazine, with or without a separate door barricade, constructed according to an approved standard drawing.

Static Fire-Firing, or functioning as designed, a munition in a hold-down position.

Static Test Stand-Locations whereon liquid propellant engines or solid propellant motors are tested in place.

Storage Compatibility-A relationship between different items of ammunition, explosives, and other dangerous materials whose characteristics are such that a quantity of two or more of the items stored or transported together is no more hazardous than a comparable quantity of any one of the items stored alone.

Substantial Dividing Wall-An interior wall designed to prevent simultaneous detonation of quantities of explosives on opposite sides of the wall.

Surveillance/Quality Assurance-The observation, inspection, test, evaluation, and condition code classification of ammunition; ammunition components and explosives in movement; storage and use to determine the current degree of serviceability and rate of deterioration. Inspections during salvage and demilitarization operations to assure compliance with approved standards.

Toxicity-The property possessed by a material which enables it to injure the physiological mechanism of a living organism by chemical means, with maximum effect being death.

Unbarricaded-Without effective barricade between magazines, operating buildings, stacks, etc., opposed one to another.

Waiver-Written authority from a theater commander, permitting deviation from a mandatory rule for a limited time, pending correction of the condition, or written authority from an installation commander, permitting deviation from an advisory provision. The latter type, local waivers, are also granted for specific periods of time.

Warhead or Warhead Section-That portion of a rocket or guided missile containing the high explosives charge or other destructive agent.

Warning-An operating procedure, practice, etc., which if not correctly followed, could result in injury to personnel or loss of life.

Wind Direction Indicator-Weather vanes, smoke pots, smoke grenades or similar devices used for indicating the direction the wind is blowing.

Wind Velocity Indicator-An anemometer.

APPENDIX C
SINGLE MANAGER ASSIGNMENT FOR CONVENTIONAL AMMUNITION
(Department of Defense Directive No. 5160.65)

C-1. GENERAL

Pursuant to the authority vested in the Secretary of Defense, the Secretary of the Army is assigned as Single Manager for procurement, production, supply and maintenance/renovation of conventional ammunition within the Department of Defense (DoD) with responsibilities, functions, authority, and relationships as set forth herein.

C-2. APPLICABILITY

The provisions of this Directive apply to the Office of the Secretary of Defense, the Military Departments, and the Defense Supply Agency (hereinafter referred to collectively as "DoD Components"). The term "Military Services", as used herein, refers to the Army, Navy, Marine Corps, and Air Force.

C-3. OBJECTIVES

The objectives of this assignment are to:

a. Integrate conventional ammunition logistics functions of the Military Departments to the maximum extent practicable thereby eliminating unwarranted overlap and duplication.

b. Achieve the highest possible degree of efficiency and effectiveness in the DoD operations required to provide top quality conventional ammunition to U.S. forces during peacetime and mobilization.

C-4. DEFINITION

a. The term "conventional ammunition" (hereinafter referred to as "ammunition") includes the following:

(1) Small arms, mortar, automatic cannon, artillery, and shipgun ammunition.

(2) Bombs (cluster, fuel air explosive, general purpose, and incendiary).

(3) Unguided projectiles and rockets.

(4) Chemical ammunition with various fillers (incendiary, riot control, smoke, toxic agents, burster igniters, peptizers, and thickeners for flame fuel).

(5) Land mines (ground-to-ground and air-to-ground delivered).

(6) Demolition materiel.

(7) Grenades.

(8) Flares and pyrotechnics.

(9) All items included in the foregoing such as explosives, propellants, chemical agents, cartridges, propelling charges, projectiles, warheads (with various fillers such as high explosive, illuminating, incendiary, antimateriel, and anti-personnel), fuzes, boosters, and safe and arm devices, in bulk, combination, or separately packaged items of issue for complete round assembly.

b. Specifically excluded are the following:

(1) Guided missiles.

(2) Naval mines and torpedoes.

(3) Nuclear ammunition and included items such as warheads, warhead sections, projectiles, demolition munitions, and training ammunition.

(4) Cartridge and propellant actuated devices. (5) Chaff and chaff dispensers.

(6) Guidance kits for bombs or other ammunition.

C-5. RESPONSIBILITIES AND FUNCTIONS

a. The Secretary of the Army shall:

(1) Procure ammunition, including his own and that assigned to him as set forth in C-5b(1),

below (hereinafter collectively referred to as "assigned ammunition"), upon receipt of purchase requests as set forth in C-5b(3), below, and in accordance with ASPR TArmed Services Procurement Regulation). The following partial purchase assignments, previously assigned by DoD Instruction 4115.1 (DoD Coordinated Procurement Program-Purchase Assignment) and ASPR to the Department of the Navy, are hereby reassigned to the Secretary of the Army: Federal Supply Classification Classes 1310, 1325, 1340, and 1390.

(2) Provide contract administration services in accordance with ASPR and physical security in accordance with DoD Directive 5100.76 (Physical Security Review Board), either separately or by arrangements with the Director, Defense Supply Agency, where appropriate, during procurement of assigned ammunition.

(3) Establish and maintain, in coordination with the Secretaries of the Navy and Air Force and the Director, Defense Supply Agency, where appropriate, a quality assurance program, including first article testing and approval, that conforms to the policies prescribed by DoD Directive 4155.1 (Quality Assurance). This program shall cover assigned ammunition during procurement (C-5a(1), above) and in the wholesale inventory (C-5a(8), below). It shall complement the overall quality assurance system for ammunition which is a responsibility of the Secretaries of the Navy and Air Force and is retained by them as set forth in C-5b(15)(b), below.

(4) In planning for production of assigned ammunition, comply fully with the policies of DoD Directive 4005.1 (DoD Industrial Preparedness Production Planning) and ASPR by giving preference to privately-owned facilities to minimize the need for Government-financed facilities.

(5) Manage, operate, and maintain all DoD installations and facilities involved in, capable of, and required for manufacturing assigned ammunition. This responsibility applies to his own industrial facilities and those transferred to him by the Secretaries of the Navy and Air Force in accordance with C-5b(7), below. It includes functions as follows:

(a) Establishment and operation of DoD commercial or industrial activities in accordance with DoD Directive 4100.15 (Commercial or Industrial Activities).

(b) Providing DoD-owned facilities to contractors in accordance with DoD Directive 4275.5 (Industrial Facility Expansion and Replacement) and ASPR.

(c) Operation of facilities in accordance with DoD Directive 7410.4 (Regulations Governing Industrial Fund Operations) when industrial funds are used.

(d) Acquisition, management, and disposal of real property in accordance with DoD Directive 4165.6 (Real Property, Acquisition Management and Disposal), including utilization and retention of such property in accordance with DoD Directive 4165.20 (Utilization and Retention of Real Property) and obtaining prior approval of real property actions in accordance with DoD Instruction 4165.12 (Prior Approval of Real Property Actions).

(e) Expansion and replacement of industrial facilities in accordance with DoD Directive 4275.5.

(f) Maintenance of real property in accordance with DoD Directive 4165.2 (DoD Real Property Maintenance Activities Program).

(g) Management of DoD-owned industrial plant equipment in accordance with DoD Directive 4215.18 (Management of Defense-Owned Industrial Plant Equipment (IPE).

(h) Military construction in accordance with DoD Directives 7040.4 (Military Construction Authorization and Appropriation) and 7040.2 (Program for Improvement in Financial Management in the Area of Appropriations for Acquisition and Construction of Military Real Property) and with DoD Directive 7150.5 (Responsibility for Programming and Financing of Facilities at Military Installations Utilized by Two or More Department of Defense Components), when appropriate.

(6) Conduct, in coordination with the Secretaries of the Navy and Air Force, a manufacturing

technology program for assigned ammunition in accordance with DoD Instruction 4200.15 (Manufacturing Technology Program).

(7) Conduct, in collaboration with the Secretaries to the Navy and Air Force, industrial preparedness production planning for assigned ammunition in accordance with DoD Directive 4005.1 and ASPR (C-5a(4), above).

(8) Manage, operate, and maintain the wholesale inventory of ammunition in CONUS, including related and required installations and facilities or parts of them. Wholesale inventory includes all conventional ammunition stocks between point of production and point of receipt at first intermediate retail CONUS activity (e.g., tidewater port, air base, post, camp, or station). Retail inventory includes conventional ammunition stocks between point of receipt at first intermediate/retail CONUS activity and point of consumption. The wholesale inventory consists of his own ammunition and that assigned to him by the Secretaries of the Navy and Air Force (C-5b(1), below). This responsibility applies to his own installations and facilities, or parts of them, and those transferred to him by the Secretaries of the Navy and Air Force (C-5b(8), below). It includes functions as follows:

(a) Inventory management in accordance with DoD Directive 4140.1 (Inventory Management Policies). This management of the wholesale inventory management of the retail inventory worldwide which is a responsibility of the Secretaries of the Navy and Air Force and is retained by them in accordance with C-5b(15)(d), below.

(b) Receipt and storage of ammunition in accordance with DoD Instruction 4140.7 (Control, Supply, and Positioning of Materiel) and provision, management, and operation of related storage and warehousing facilities and services in accordance with DoD Directive 4145.19 (Storage and Warehousing Facilities and Services).

(c) Issuance of his own assets and of assets owned by the Secretaries of the Navy and Air Force to their retail inventories (C-5b(15)(d), below). Such issues and related movements shall be based on instructions and transportation resources provided by the Secretaries of the Navy and Air Force (C-5b(6), below) and in accordance with the movement and issue priority system prescribed by DoD Directive 4410.6 (Uniformed Materiel Movement and Issue Priority System (UMMIPS)). The Single Manager is to coordinate with the Services in selection or storage depots so as to minimize cost of maintenance and to optimize ability to meet Service requirements. The Services do not have veto power over the final decision by the Single Manager. Inter-Service transfers will continue to require approval by the affected Service(s). However, for items with a high degree of commonality, the Services should provide pre-arranged standing approvals permitting the Single Manager to make inter-Service transfers. DoDD 4140.1 requires that the SM operate an Inventory Control Point for wholesale conventional ammunition stocks assigned which includes control of assigned stocks as well as maintenance of accurate records of those stocks. The SM is responsible for custodial accountability for wholesale conventional ammunition stocks assigned to him. Custodial accountability is defined as the maintenance of data elements in the inventory record to reflect by ownership code the receipt, issue, balance, and such other quantitative and financial data determined by the SM as minimum essential for proper control and management of Service owned stocks commingled in storage. The Single Manager is responsible for property management. This includes responsibility for damage, loss, or destruction of assigned property. The Single Manager is relieved of his custodial accountability and property management responsibilities upon the Services receipt by an accountable officer or custodian at the first retail point. Thereupon, the stocks are considered retail stocks and the Service assumes custodial responsibility and property management.

(d) Depot maintenance/renovation of his own assets and of assets owned by the Secretaries of the Navy and Air rorc4: in accordance with the general objectives and policies prescribed by DoD Directive 4151.16 (DoD Equipment Maintenance Program) and DoD Directive 4151.1 (Use of Contractor and Government Resources for Maintenance of Materiel). Such maintenance/renovation shall be

based on instructions and resources provided by the Secretaries of the Navy and Air Force (C-5b(6), below) and upon procedures jointly developed and agreed upon.

(e) Demilitarization and disposal, in coordination with the Secretaries of the Navy and Air Force and with the Director, Defense Supply Agency, as appropriate, in accordance with DoD Directive 4160.21 (Department of Defense Personal Property Disposal Program) and DoD Instruction 7310.1 (Accounting and Reporting for Property Disposal and Proceeds from Sale of Disposable Personal Property and Lumber of Timber Products).

(f) Wholesale requirements aggregation and procurement direction in accordance with DoD Instruction 4140.7.

(g) Maintenance of real property in accordance with DoD Directive 4165.2.

(h) Management of DoD-owned industrial plant equipment in accordance with DoD Directive 4215.18.

(i) Military construction in accordance with DoD Directives 7040.4 and 7040.2 and with DoD Directive 7150.5, when appropriate.

(9) Use the military standard logistics data systems prescribed by DoD Directive 4000.25 (Administration of Military Standard Logistics Data Systems) in the functions covered in this assignment.

(10) Manage DoD-owned plant equipment at contractor plants and required to manufacture assigned ammunition in accordance with DoD Directive 4215.18.

(11) Manage transportation and handling of assigned ammunition during procurement and in the wholesale inventory in accordance with the policies prescribed by DoD Directive 4500.9 (Transportation and Traffic Management) and under the overall management of Single Managers assigned by DoD Directives 5160.2 (Single Manager for Airlift Services), 5160.10 (Single Manager Assignment for Ocean Transportation), and 5160.63 (Single Manager Assignment for Military Traffic, Land Transportation, C-4 and Common-User Ocean Terminals). The Single Manager will coordinate with Military Traffic Management Command (Army), Military Sealift Command (Navy), Military Airlift Command (Air Force), and Service Components prior to selection of which stocks to be shipped and from what depot. The owning Service, on an exception basis, can challenge the Single Manager's decision and provide specific instructions.

(12) Develop and acquire equipment and facilities required to demilitarize assigned ammunition in accordance with DoD Directive 4275.5.

(13) Consistent with the provisions of DoD Directive 5000.19 (Policies for the Management and Control of DoD Information Requirements), act as Executive Agent, supported by functional requirements from other DoD Components, to develop, design, and centrally maintain a standard DoD-wide automated data system covering the functions in this assignment. This standard system shall not be duplicated and shall replace nonstandard systems currently used by any DoD Component.

(14) Provide management information on assigned ammunition during procurement and in the wholesale inventory to the Secretaries of the Navy and Air Force through the automated data system prescribed by C-5a(13), above. The Single Manager will report to each Service the wholesale assets by quantity facility location, lot number and readiness condition. Each Service retains the right to evaluate the condition of their own ammunition and prepare summary reports on their total inventories. To assure that unwarranted duplication is eliminated, the Single Manager is to furnish summary information of the wholesale conventional ammunition inventory owned by each Service, thus permitting the Service to aggregate this information with their retail stock data to meet their worldwide asset accountability requirement. This precludes the need of the Services to generate their own summary information on the wholesale conventional ammunition stocks.

(15) Collaborate with the Secretaries of the Navy and Air Force and with the Air Munitions Requirements and Development (AMRAD) Committee throughout RDT&E of ammunition and on assigned ammunition already in use to:

(a) Provide logistics implications in short and long range acquisition planning.

(b) Provide logistics schedules and costs for the Decision Coordinating Paper (DCP) or Program Memorandum (PM) required by Dod Instruction 5000.2 (The Decision Coordinating Paper (DCP) and the Defense Systems Acquisition Review Council (DSARC)).

(c) Meet standardization objectives prescribed by DoD Directive 4120.3 (Department of Defense Standardization Program).

(16) Collaborate with the Secretaries of the Navy and Air Force in advance procurement planning for assigned ammunition as set forth in C-5b(11), below.

(17) Collaborate with the Department of Defense Explosives Safety Board on assigned ammunition functions in this assignment in accordance with DoD Directive 5154.4 (The Department of Defense Explosive Safety Board).

(18) Participate with the Secretaries of the Navy and Air Force in configuration control of assigned ammunition in accordance with DoD Directive 5010.19 (Configuration Management).

(19) Participate in the industrial facilities protection program prescribed by DoD Directive 5160.54 (Industrial Facilities Protection Program) in order to provide physical security and protection of industrial facilities managed as set forth in C-5a(5) and C-5a(8), above.

(20) Provide, as necessary, authorized personnel of the Departments of the Navy and Air Force with access to plans, operations, and facilities for manufacturing, storage, maintenance/ renovation, and demilitarization of assigned ammunition.

(21) Establish, by agreement with the Secretaries of the Navy and Air Force, positions for Navy and Air Force military and civilian personnel that will provide career development in ammunition logistics.

(22) Provide, as required, and based on interservice support established in accordance with DoD Directive 4000.19 (Basic Policies and Principles for Interservice, Interdepartmental, and Interagency Support), the following:

(a) Fabrication of developmental ammunition in support of RDT&E of the Secretaries of the Navy and Air Force upon their request and with resources provided by them.

(b) Limited training of military personnel and military units of the Departments of the Navy and Air Force in ammunition logistics upon their request and with resources provided by them.

(23) Prepare, with assistance of the Secretaries of the Navy and Air Force, and submit program changes in manpower and costs required by this assignment either in Program Objective Memoranda (POMs) or Program Change Requests (PCRs) in accordance with DoD Instruction 7045.7 (The Planning, Programming, and Budgeting System).

(24) Plan, program, and budget resources necessary for his responsibilities and functions in this assignment in accordance with DoD Instruction 7045.7 and with DoD Directive 7150.5 when the Department of the Army is involved in a host-tenant relationship with the Departments of the Navy and Air Force.

b. The Secretaries of the Navy and Air Force shall:

(1) Assign ammunition approved for use by their Military Services and released for full-scale production to the Secretary of the Army for procurement as set forth in C-5a(1) above and for his further management as set forth in C-5a(2) through (21) above. Arrangements for this interservice support shall be established in accordance with DoD Directive 4000.19.

(2) Provide their requirements as to quantities and priorities of assigned ammunition to the Secretary of the Army in time for him to purchase, produce, store, and maintain/renovate such ammunition from or in established privately-owned or Government owned facilities or in time to establish the required capability and capacity.

(3) Submit purchase requests for procurement of assigned ammunition

to the Secretary of the Army in accordance with DoD Directive 4115.1 and ASPR.

(4) Use the military standard logistics data systems prescribed by DoD Directive 4000.25 in transactions on assigned ammunition with the Secretary of the Army (C-5a(9), above).

(5) Participate with the Secretary of the Army in establishing and maintaining the quality assurance program set forth in C-5a(3), above).

(6) Provide instructions and resources to the Secretary of the Army for transportation of their assets from the wholesale inventory (C-5a(8) (c), above) and for maintenance/renovation of their assets in the wholesale inventory (C-5a(8)(d), above).

(7) Transfer their industrial facilities involved in manufacturing assigned ammunition to the Secretary of the Army for management as set forth in C-5a(5), above.

(8) Transfer their installations and facilities, or parts of them, involved in receipt, storage, issue, maintenance/renovation, and demilitarization of assigned ammunition to the Secretary of the Army for management as set forth in C-5a(8), above.

(9) Transfer their DoD-owned plant equipment at contractor plants involved in manufacturing assigned ammunition to the Secretary of the Army for management as set forth in C-5a(10), above.

(10) Collaborate with the Secretary of the Army on the manufacturing technology program set forth in C-5a(6), above and in industrial preparedness production planning as set forth in C-5a (7), above.

(11) Conduct, in collaboration with the Secretary of the Army, advance procurement planning for their ammunition in accordance with ASPR and negotiations of initial production contracts for ammunition when the procedures of ASPR 3-108 are used.

(12) Collaborate with the Secretary of the Army throughout RDT&E of their ammunition and on assigned ammunition already in use as set forth in C-5a (1), above.

(13) Assign, for purposes of career development, military and civilian personnel to positions established by the Secretary of the Army as set forth in C-5a(21), above.

(14) Arrange for services with the Secretary of the Army through interservice support established in accordance with DoD Directive 4000.19 as follows:

(a) Fabrication of developmental ammunition (C-5a(22) (a), above).

(b) Limited training of military personnel and military units CC-5a(22)(b), above).

(15) Retain responsibility for the following:

(a) RDT&E of ammunition developed by their Military Services, including test and evaluation of any developmental ammunition fabricated by the Secretary of the Army (C-5a(22)(a), above).

(b) Overall configuration management and control in accordance with DoD Directive 5010.19 and overall quality assurance in accordance with DoD Directive 4155.1 (Quality Assurance) for ammunition developed by their Military Services for its life cycle.

(c) Determining their requirement as to quantities of assigned ammunition to be procured by the Secretary of the Army as set forth in C-5a(1), above and the planning, programming, and budgeting for these requirements as set forth in C-5b(17)(a), below.

(d) Inventory management world-wide of their retail inventories on ammunition in accordance with DoD Directive 4140.1. The retail inventories consist of all their ammunition world-wide that is not included in the wholesale inventory in CONUS as managed and defined in C-5a(18), above.

(e) All other functions assigned by DoD Directive 5100.1 (Functions of the Department of Defense and Its Major Components) and not specifically assigned to the Secretary of the Army by this Directive.

(16) Assist the Secretary of the Army in preparing program changes necessary to implement this assignment as set forth in C-5a(23), above.

(17) Plan, program, and budget resources necessary for their responsibilities and functions in this assignment in accordance with DoD Instruction 7045.7 as follows:

(a) Procurement of their ammunition, including cost of first destination transportation, assigned to the Secretary of the Army for procurement (C-5b(l), C-5b(3), and C-5a(1), above).

(b) Transportation of their assets from tee wholesale inventory to their retail inventories (C-5b(6) and C-5a(8)(c), above).

(c) Depot maintenance/renovation of their assets in the wholesale inventory (C-5b(6), and C-5a(8)(d), above).

(d) Fabrication of developmental ammunition by the Secretary of the Army (C-5b(14)(a) and C-5a(22)(a), above).

(e) Limited training provided by the Secretary of the Army (C-5b (14)(b) and C-5a(22)(b), above).

(f) Programming and financing of facilities in accordance with DoD Directive 7150.5 (Responsibility for Programming and Financing of Facilities at Military Installations Utilized by Two or More Department of Defense Components) when the Department of the Navy and Air Force are involved in a host-tenant relationship with the Department of the Army (C-5a(5)(h) and C-5a(8)(i), above).

(18) Assess responsiveness of the Secretary of the Army to their operational needs.

c. The Under Secretary of Defense shall:

(1) Have staff responsibility for this assignment within the Office of the Secretary of Defense.

(2) Provide policy and guidance to the Secretary of the Army for this assignment.

(3) Appraise, in collaboration with other staff elements of the Office of the Secretary of Defense, the Secretary of the Army's performance under this assignment.

(4) Exercise control over implementing documents through routine audits and investigation of any specific questions and/or concerns issued by any of the Services.

C-6. AUTHORITY

The Secretary of the Army is the specifically delegated authority to have access and direct communications with the Secretaries of the Navy and Air Force and the Director, Defense Supply Agency for all matters in this assignment.

C-7. RELATIONSHIPS

a. In the performance of this assignment, the Secretary of the Army will:

(1) Coordinate actions, as appropriate, with the Secretaries of the Navy and Air Force and the Director, Defense Supply Agency.

(2) Maintain appropriate liaison for exchange of information and findings related to his assigned responsibilities and functions.

(3) Make maximum use of established facilities, procedures, and channels for procurement, production, supply, and maintenance/renovation and for related accounting, disbursing, investigative, safety, security, and other administrative operations.

(4) Obtain information from the Secretaries of the Navy and Air Force and the Director, Defense Supply Agency necessary for performance of his functions. Such information will be obtained in accordance with DoD Directive 5000.19.

(5) Ensure that the Secretaries of the Navy and Air Force, the Director, Defense Supply Agency, and appropriate staff elements of the Office of the Secretary of Defense are kept fully informed concerning his activities, as appropriate.

b. The Secretaries of the Navy and Air Force will:

(1) Provide assistance within their respective fields of responsibility to the Secretary of the Army for carrying out his assigned responsibilities and functions.

ED_001691B_00007347

(2) Coordinate with the Secretary of the Army all programs which include or are related to ammunition.

(3) Keep the Secretary of the Army informed as to the substance of their major actions being coordinated with each other or with other DoD Components which relate to the responsibilities and functions of the Secretary of the Army in this assignment.

C-8. EFFECTIVE DATE AND IMPLEMENTATION

This Directive is effective immediately. Four copies of the implementing documents shall be forwarded to the Assistant Secretary of Defense (Installations and Logistics) within 180 days. The Single Manager for Conventional Ammunition is authorized to publish and maintain such manuals (DoD 5160.65M) and procedures as determined necessary to accomplish his assignment.

INDEX

	Paragraph, Figure, Table	Page
Accessories, Demolition	4-4	4-12
Agencies to be notified	2-2a	2-1
Ammunition Peculiar Equipment (APE):		
Deactivation Furnace (APE 1236)	Figs. 6-4, 6-5, 6-6	6-8,6-9, 6-10
Pollution Control System (KIT E010)	Fig. 6-7	6-11
Washout Plant (APE 1300)	Figs. 6-1, 6-2, 6-3	6-3,6-4, 4,6-5
Ammunition Storage Locations	Fig. 9-1	9-2
Blasting Cap:		
Precautions for Electric Caps and Circuits	5-3	5-1
Testing	5-8b	5-7
Blasting Cap Crimper:		
Description	5-4a	5-2
Operation	5-4(j), fig. 5-4	5-3,5-4
Blasting Fuse:	4-3c	4-10
Safety Fuse	4-3c(2)	4-10
Time Blasting Fuse, General	4-3c(1)	4-10
Time Fuse M700	4-3c(3), fig. 4-10	4-10,4-11
Blasting Machines:		
Description -	4-5b	4-15
Operation	5-11	5-12
Branch Line Connections	5-14a	5-14
Budgeting	11-1d	11-1
Burning in Deactivation Furnace	8-4	8-2
Burning in Pits or Trenches	8-3	8-2
Burning Procedure	8-3b-f incl	8-2
Pit Dimensions	8-3a	8-2
Post Burning Inspection	8-3g	8-2
Chemical Agent Casualties Treatment (General)	3-1	3-1
Chemical Agents, Group A	3-1a(1)	3-1
Chemical Agents, Group B:	3-1a(2)	3-1
Decontaminating Material	3-1b(3)	3-2
Description -	3-2	3-2
Lacrimators (Tear Agents):	3-2a	3-2
CA	3-2a(1)	3-2
CN	3-2a(2)	3-2
CNS	3-2a(3)	3-3
CS -. -.	3-2a(4)	3-3
Self Aid	3-2a(6)	3-3
Symptoms	3-2a(5)	3-3
Protective Equipment:	3-1b	3-1
First Aid Equipment	3-1b(2)	3-1
Personal Equipment	3-1b(1)	3-1
Screening Smokes:	3-2c	3-4
FM	3-2c(1)	3-4
FS	3-2c(2)	3-4
HC	3-2c(3)	3-4
Self Aid	3-2c(5)	3-4
Symptoms	3-2c(4)	3-4
Sternutators (Vomiting Agents):	3-2b	3-3
DA (diphenylchloroarsine) _	3-2b(1)	3-3
DC (diphenylcyanoarsine)	3-2b(2)	3-3
DM (diphenylaminochlorarsine) -	3-2b(3)	3-3
Self Aid	3-2b(5)	3-4
Symptoms -	3-2b(4)	3-3

ED_001691B_00007347

	Paragraph, Figure, Table	Page
Chemical Agents, Group C:		
Copper Sulfate Warning	3-1c	3-2
Description:	3-3	3-4
PWP (Plasticized white phosphorous)	3-3a(2)	3-4
WP (White phosphorous)	3-3a(1)	3-4
Self Aid	3-3c	3-5
Symptoms	3-3b	3-4
Emergency Showers	3-1c(5)	3-2
Firefighting Equipment	3-1c(4)	3-2
First Aid Stations	3-1c(3)	3-2
General	3-1a(3)	3-1
Protective Equipment:	3-1c	3-2
First Aid Equipment	3-1c(2)	3-2
Personal Equipment	3-1c(1)	3-2
Chemical Agents, Group D:	3-1a(4)	3-1
Chemical Munitions	2-4a	2-3
Chemical Munition Demilitarization Methods:		
Equipment	6-10a	6-12
Process	6-10b	6-12
Clip, Cord, Detonating, M1:		
Connections	5-14, figs. 5-15 and 5-16	5-13,5-13,5-14
Description	5-14	5-13
Communications	2-3e	2-2
Connector, Detonating Cord	4-4c	4-13
Conventional Ammunition Demilitarization Facilities and Capabilities (AMCCOM)	Table 9-2	9-5
Copper Sulfate Warning, Use of	3-1c	3-2
Cord, Detonating:		
Connections	5-14	5-13
Description	5-12	5-13
Safety Precautions	5-13	5-13
Use	5-12	5-13
Deactivation Furnace (APE 1236):		
Capacity	6-7c	6-8
Description	6-7a	6-7
Operation	6-7a	6-7
Pollution Control System	6-7f	6-8
Debanding Equipment:		
Projectiles 57 thru 120mm (APE 1042 or 1208)	6-3g, h	6-2,6-2
Projectiles 155 thru 280mm (APE 122 6	6-3i	6-2
Demilitarization/Disposal Training:		
General -	7-1	7-1
Off-Site Training:	7-3	7-1
Ammunition Demilitarization Course	7-3a	7-1
Surveillance of Maintenance/ Demilitarization Operations Course	7-3b	7-1
On-Site Training	7-2	7-1
Demilitarization Processes:		
Chemical - -	6-10a	6-12
Deactivation Furnace	6-7a	6-7
High Pressure Washout	6-5a	6-6
Open Burning	6-8a	6-9
Open Detonation	6-9a	6-12
Steamout -.	6-6a	6-6
Washout -	6-4a	6-2
Demilitarization Technology Report	10-1e	10-1

ED_001691B_00007347

	Paragraph, Figure, Table	Page
Demolition Charges:		
M2 Block	Fig. 4-6	4-8
M15 Heat Mine	Fig. 4-5	4-7
M37	Fig. 4-4	4-6
M5A1	Fig. 4-1	4-1
M112	Fig. 4-2	4-4
M183	Fig. 4-3	4-5
Demolition Charge Initiators:		
Blasting Machine	Fig. 4-20	4-16
Blasting Galvanometer	Fig. 4-18	4-15
Demolition Materials:		
Accessories	Table 4-2	4-4
Equipment -	Table 4-2	4-4
Explosive Charges	Table 4-1	4-3
Initiating Devices	Table 4-1	4-3
Demolition Materials (General):	4-1	4-1
Alternate Explosive Charges	4-2b	4-5
Charge, Assembly, Demolition, M37 _-	4-2a(4), fig. 4-4	4-4,4-6
Charge, Assembly, Demolition, M183	4-2a(3), fig. 4-3	4-4,4-5
Charge, Demolition, Block, M2	4-2b(3), fig. 4-6	4-6,4-8
Charge, Demolition, Block, M5A1	4-2a(1), fig. 4-1	4-1,4-1
Charge, Demolition, Block, AM112 _	4-2a(2), fig. 4-2	4-1,4-4
Charge, Demolition, Block, 8 pound, TNT	4-2b(4)	4-6
Charge, Demolition-Chain, MI	4-2b(2)	4-6
Excess Explosive Items	4-2b(5)	4-6
Explosive Charges	4-2	4-1
General -	4-2a	4-1
Mine Antitank, M15	4-2b(1), fig. 4-5	4-5,4-7
Depot Maintenance Work Requirements (DMWR):	7-4	7-2
Demilitarization DMWR Cross-Reference	7-4c	7-2
DMWR Description	7-4a	7-2
DMWR Index	7-4b	7-2
DESCOM and AMCCOM Facility Locations	9-1	9-1
DESCOM Depot Facilities and Capabilities	9-2, Table 9-1	9-1,9-3
Design for Demilitarization	10-7	10-3
Detonating Cord	4-3d, fig. 4-11	4-11,4-11
Detonating Cord Clip M1	Fig. 4-16	4-14
Detonating Cord Connector	Fig. 4-17	4-14
Detonation, Disposal by	8-5	8-2
Detonation Pit	2-3f	2-2
Devices, Firing (See Firing Devices)		
Disassembly Machines:		
Cartridge, 90mm (APE 1227)	6-3e	6-2
Defuzing, Hand Grenade (APE 1202 or 2156)	6-3j	6-2
Defuzing, Projectile (APE 1002)	6-3c	6-2
Deprime Cartridge Case (APE 1229)	6-3f	6-2
Fuze, Artillery (APE 1118)	6-3k	6-2
Mortar and Fin Assemblies (APE 1153)	6-3l	6-2
Rocket, 3.5-Inch (APE 1215)	6-3d	6-2
Vertical Pull Apart, Fixed Ammunition (APE 1001)-	6-3a	6-1
Vertical Pull Apart, Automated, Fixed Ammunition (APE 2000)	6-3b	6-1
Disposal Methods:		
Burning on the Surface	8-2	8-1
Burning Procedure	8-2b	8-1
General 8-1	8-1	
Initial Precautions	8-2a	8-1

	Paragraph, Figure, Table	Page
Dual Firing System:		
Combination	5-20, fig.5-25	5-17,5-20
Description	5-19, fig.5-24	5-17,5-20
Electric	5-19,5-21, fig.5-26	5-17,5-18, 5-21
Electric Blasting Cap	Fig.4-7	4-9
Electrical Storms	2-10a	2-8
Electric Squib, M1 Flash Vented	Fig.4-14	4-13
Environmental Regulations:	10-2	10-1
Compliance	10-3a	10-2
Controls	10-3b	10-2
Technical Assistance	10-3d	10-2
Equipment Demolition:	4-5	4-13
Blasting Machines (General):	4-5b	4-15
M32 Blasting Machine	4-5b(3)	4-15
M34 Blasting Machine	4-5b(4)	4-17
Newer Machines	4-5b(1)	4-15
Older Machines	4-5b(2)	4-15
Circuit Testers:	4-5a	4-13
Galvanometer, Blasting	4-5a(1), fig.	4-18 4-13,4-15
M51 Test Set, Blasting Cap	4-5a(2), fig.	4-19 4-14,4-15
Marking, Demolition Equipment	4-5c	4-17
Explosive Limits	2-6f	2-6
Explosive Safety	2-1a	2-1
Fire Prevention	2-3i	2-3
Firing Systems		
Electric	5-6	5-6
Nonelectric	5-2, 5-4	5-1,5-2
Safety	5-3, 5-7	5-1,5-6
Firing Systems Procedures:		
Combination Dual Firing System	Fig.5-25	5-20
Common Series Circuit	Fig.5-11	5-10
Deleted	Fig.-5	5-4
Connections Using M1I Detonating Cord Clip	Fig.5-1.5	5-13
Holding, Cutting, and Capping Time Blasting Fuze and Detonating Cord	Fig.5-2	5-2
Detonating Cord Connector	Fig.5-19	5-36
Detonating Cord Priming Methods	Fig.5-21	5-18
Dual Electric Firing System	Fig.5-24	5-20
Dual Electric Priming System	Fig.5-26	5-21
Dual Nonelectric Firing System with Dual Detonating Cord Priming	Fig.5-23	5-19
Electric Firing System	Fig.5-7	5-6
Electrical Tape Splicing	Fig.5-20	5-17
Girth Hitch with One Extra Turn	Fig.5-17	5-14
Lighting Time Blasting Fuze with Match	Fig.5-3	5-3
Nonelectric Dual Firing System for a Single Charge	Fig.5-22	5-18
Nonelectric Firing System	Fig.5-1	5-1
Plastic Bag of Smokeless Powder	Fig.5-27	5-21
Priming Adapter	Fig.5-12	5-11
Priming Adapter M1A4	Fig.5-6	5-5
Ring Main with Branch Lines	Fig.5-18	5-14
Splicing Two Pairs of Wires	Fig.5-10	5-10
Proper Position for Crimping Blasting Cap	Fig.5-4	5-4
Square Knot Connections	Fig.5-16	5-14
Testing Firing Circuit	Fig.5-14	5-12
Testing the Galvanometer	Fig.5-8	5-8
Two Half Hitches	Fig.5-13	5-11
Wire Splicing	Fig.5-9	5-9

ED_001691B_00007347

	Paragraph, Figure, Table	Page
First Aid:	3-4	3-5
General	3-4a, b,c, d	3-5
Procedures:	3-4e	3-5
CA/CN/CNS/CNB	3-4e(1)	3-5
CS/CS1/CS2	3-4e(2)	3-5
DA	3-4e(3)	3-5
DCA	3-4e(3)	3-5
DM	3-4e(3)	3-5
FM	3-4e(5)	3-6
FS	3-4e(4)	3-6
HC	3-4e(6)	3-6
WP/PWP	3-4eC7)	3-6
Fluidized Bed Incinerators	10-6	10-3
Forecasting	11-1a	11-1
Forms, Records, and Reports	1-2	1-1
Fuse Igniter, Weatherproof M2	5-4l(61), fig. 4-12	5-4,4-12
Fuse Igniter, Weatherproof M60	5-4l(2), fig. 4-13	5-4,4-13
Galvanometer:		
Testing	5-8a	5-7
Use	5-8b	5-7
Handling of Munitions	2-1c, 2-6a	2-1,2-5
Hazard Classification	1-4	1-3
High Pressure Washout:		
Applications	6-5a	6-6
Operation	6-	6-6
Housekeeping:	2-7	2-7
Cleaning	2-7b	2-7
Explosive Recovery	2-7d	2-7
Sweeping Compounds	2-7c	2-7
Waste Materials	2-7a	2-7
Igniters:	4-3e	4-12
M1 Electric Squib	4-3e(3), fig. 4-14	4-12,4-13
M2 Weatherproof Fuse Igniter	4-3g(1), fig. 4-12	4-12,4-12
M60 Weatherproof Fuse Igniter	4-3_e(2), fig. 4-13	4-12,4-13
Ignition Trains:		
Description	5-22	5-18
Preparation, Electric	5-23b	5-22
Preparation, Nonelectric	5-23a	5-18
Inert Filled Items	2-3n	2-3
Initiators, Demolition Charge:	4-3	4-8
Blasting Caps, (General):	4-3b	4-8
Electric Blasting Caps	4-3b(1), fig. 4-7	4-8,4-9
M6 Electric Blasting Cap	4-3b (2)	4-8
Nonelectric Blasting Caps	4-3b(3), fig. 4-8	4-10,4-10
M7 Nonelectric Blasting Caps	4-3b(4)	4-10
General	4-3a	4-8
M1 Clip, Detonating Cord	4-4b, fig. 4-16	4-12,4-14
M1A4 Priming Adapter	4-4a, fig. 4-15	4-12,4-14
Misfires:		
Causes and Preventions	5-25, 5-27	5-22,5-23
Electric, Handling of	28	5-23
Nonelectric, Handling of	26	5-22
Safety Precautions	5-242	
Munition Disassembly	6-2a	6-1
Nonelectric Blasting Cap, Military	Fig.	4-8,4-10
Open Burning Grounds:		
Capability	6-8a	6-9
Operation	6-8b	6-9
Safety	6-8d	6-11

	Paragraph, Figure, Table	Page
Open Burning Grounds:- Continued		
Site Selection	6-8d	6-11
Open Detonation Grounds:		
Description	6-9b	6-12
Site Selection	6-9b	6-12
Open Storage-	2-11	2-9
Personnel Evacuation	2-10b	2-9
Personnel Limits	2-5b	2-5
Personnel Responsibilities	2-6e	2-6
Priming Adapter M1A4	Fig. 4-15	4-14
Protection of Personnel	2-5c	2-5
Public Laws	10-1a	10-1
Purpose and Scope	1-1	1-1
Reducing Hazards	2-2b	2-1
Resource Conservation and Recovery Act (RCRA)	10-4	10-3
Ring Main -	5-14b	5-14
Safety Fuse	Fig. 4-9	4-11
Safety Hand Tools	2-6g	2-6
Security -	2-8	2-7
Soap Materials, Inert, Certification of	8-6	8-3
Standing Operating Procedures	2-9a	2-8
Steamout:		
Description	6-6a	6-6
Operation	6-6b	6-6
Steam Cabinets	6-6c	6-7
Steamout Facilities	6-6g	6-7
Technology	10-1b	10-1
Temperature Gradient	2-4b(3)	2-4
Time Fuse	Fig. 4-10	4-11
Volatility	2-4b(2)	2-4
Waiver Actions	1-3	1-2
Warning Devices	2-3b	2-2
Washout Plant, Explosive (APE 1300):		
Description	6-4a	6-2
Operation	6-4b	6-2
Recycled Water	6-4c	6-3
Types of Explosive	6-4f	6-6
Weather and Time Factors	Table 2-1	2-4
Site Plan for Western Demilitarization Facility Showing Locations of all Principal Buildings, Roads, and Rail Lines	Fig 9-2	9-19
Workloading and Funding:		
AMCCOM Plants/Arsenals	11-2a	11-1
DESCOM Depots	11-2b	11-2
Material Release Order (MRO)	11-2b(2)	11-3
Worldwide Ammunition Reporting Systems (WARS)	11-3a	11-3

ED_001691B_00007347

By Order of the Secretary of the Army:

E. C. MEYER
General, United States Army
Chief of Staff

Official:

ROBERT M. JOYCE
Brigadier General, United States Army
The Adjutant General

Distribution:
To be distributed in accordance with DA Form 12-40, Requirements for General Information applicable to all organizations which have Conventional Munitions Missions.

* U.S. GOVERNMENT PRINTING OFFICE : 1993 0 - 342-421 (62164)

RECOMMENDED CHANGES TO EQUIPMENT TECHNICAL PUBLICATIONS

SOMETHING WRONG WITH PUBLICATION

FROM: (PRINT YOUR UNIT'S COMPLETE ADDRESS)

DATE SENT

PUBLICATION NUMBER	PUBLICATION DATE	PUBLICATION TITLE

BE EXACT PIN-POINT WHERE IT IS

PAGE NO.	PARA-GRAPH	FIGURE NO.	TABLE NO.

IN THIS SPACE, TELL WHAT IS WRONG AND WHAT SHOULD BE DONE ABOUT IT.

PRINTED NAME, GRADE OR TITLE AND TELEPHONE NUMBER	SIGN HERE

DA FORM 1 JUL 79 2028-2

PREVIOUS EDITIONS ARE OBSOLETE.

P.S.--IF YOUR OUTFIT WANTS TO KNOW ABOUT YOUR RECOMMENDATION MAKE A CARBON COPY OF THIS AND GIVE IT TO YOUR HEADQUARTERS.

PIN: 051214-004

This fine document...

Was brought to you by me:

Liberated Manuals -- free army and government manuals

Why do I do it? I am tired of sleazy CD-ROM sellers, who take publicly available information, slap “watermarks” and other junk on it, and sell it. Those masters of search engine manipulation make sure that their sites that sell free information, come up first in search engines. They did not create it... They did not even scan it... Why should they get your money? Why are not letting you give those free manuals to your friends?

I am setting this document FREE. This document was made by the US Government and is NOT protected by Copyright. Feel free to share, republish, sell and so on.

I am not asking you for donations, fees or handouts. If you can, please provide a link to liberatedmanuals.com, so that free manuals come up first in search engines:

<A HREF=http://www.liberatedmanuals.com/>Free Military and Government Manuals</A>

- Sincerely
  Igor Chudov
  http://igor.chudov.com/