Weston Solutions, Inc.
205 Campus Drive
Edison, New Jersey 08837
732-417-5800 • Fax: 732-417-5801
www.westonsolutions.com

The Trusted Integrator for Sustainable Solutions

March 31, 2016

Mr. James Desir, Task Monitor
U.S. Environmental Protection Agency, Region 2
290 Broadway, 18th Floor
New York, NY 10007-1866

Document Control No.: W0311.1E.00880

Subject: Uniform Federal Policy – Quality Assurance Project Plan
TDD No.: 0004/1601-01, Saint-Gobain Performance Plastics HRS
Contract No. EP-S8-13-01 (Region 8 START IV)

Dear Mr. Desir,

Enclosed please find the Uniform Federal Policy (UFP) Quality Assurance Project Plan (QAPP) for the monitoring well installation and multi-media sampling to be conducted at the Saint-Gobain Performance Plastics site. If you have any questions or comments, please do not hesitate to contact me at (732) 417-5828.

Sincerely,
WESTON SOLUTIONS, INC.

Scott T. Snyder, CHMM
Principal Project Scientist

Enclosure

cc: C. Romano, EPA (w/o enclosure)
M. Hauptman, EPA (w/o enclosure)
G. Gilliland, WESTON (w/o enclosure)
TDD No.: 0004/1601-01 file

This page has been left blank intentionally.

Uniform Federal Policy – Quality Assurance Project Plan
Saint-Gobain Performance Plastics
Village of Hoosick Falls, Rensselaer County, New York

DCN: W0311.1E.00880
TDD No.: 0004/1601-01
EPA Contract No.: EP-S8-13-01 (Region 8 START IV)

Prepared for:

U.S. Environmental Protection Agency Region 2
New York, New York 10007

Prepared By:

Region 2 Site Assessment Team (SAT)
Weston Solutions, Inc.
205 Campus Drive
Edison, New Jersey 08837

March 2016

TABLE OF CONTENTS

CROSSWALK....1
QAPP Worksheet #1: Title and Approval Page....4
QAPP Worksheet #2: QAPP Identifying Information....5
QAPP Worksheet #3: Distribution List....6
QAPP Worksheet #4: Project Personnel Sign-Off Sheet....7
QAPP Worksheet #5: Project Organizational Chart....8
QAPP Worksheet #6: Communication Pathways....9
QAPP Worksheet #7: Personnel Responsibilities and Qualifications Table....10
QAPP Worksheet #8: Special Personnel Training Requirements Table....11
QAPP Worksheet #9: Project Scoping Session Participants Sheet....12
QAPP Worksheet #10: Problem Definition....15
QAPP Worksheet #11: Project Quality Objectives/Systematic Planning Process Statement.19
QAPP Worksheet #12: Measurement Performance Criteria Table....21
QAPP Worksheet #13: Secondary Data Criteria and Limitations Table....26
QAPP Worksheet #14: Summary of Project Tasks....27
QAPP Worksheet #15: Reference Limits and Evaluation Table – VOCs....31
QAPP Worksheet #15: Reference Limits and Evaluation Table – SVOCs....32
QAPP Worksheet #15: Reference Limits and Evaluation Table – Aroclors....34
QAPP Worksheet # 15: Reference Limits and Evaluation Table – Inorganics....35
QAPP Worksheet #15: Reference Limits and Evlauation Table – Perfluorinated Compounds (PFCs)....36
QAPP Worksheet #16: Project Schedule/Timeline Table....37
QAPP Worksheet #17: Sampling Design and Rationale....38
QAPP Worksheet #18: Sampling Locations and Methods/SOP Requirements Table....41
QAPP Worksheet #20: Field Quality Control Sample Summary Table....44
QAPP Worksheet #21: Project Sampling SOP References Table....46
QAPP Worksheet #22: Field Equipment Calibration, Maintenance, Testing, and Inspection Table....47
QAPP Worksheet #23: Analytical SOP References Table....48
QAPP Worksheet #24: Analytical Instrument Calibration Table....50
QAPP Worksheet #25: Analytical Instrument and Equipment Maintenance, Testing, and Inspection Table....52
QAPP Worksheet #26: Sample Handling System....53
QAPP Worksheet #27: Sample Custody Requirements....54
QAPP Worksheet #28: QC Samples Table (page 1 of 5)....55
QAPP Worksheet #29: Project Documents and Records Table....61
QAPP Worksheet #30: Analytical Services Table....62
QAPP Worksheet #31: Planned Project Assessments Table....63
QAPP Worksheet #32: Assessment Findings and Corrective Action Responses....64
QAPP Worksheet #33: QA Management Reports Table....65
QAPP Worksheet #34: Verification (Step I) Process Table....66
QAPP Worksheet #35: Validation (Steps IIa and IIb) Process Table....67
QAPP Worksheet #36: Validation (Steps IIa and IIb) Summary Table....68
QAPP Worksheet #37: Usability Assessment....69

ED_001670_00012770-00004

LIST OF ATTACHMENTS

ATTACHMENT 1: Summary Tables and Figures

Table 1: Summary of CLP Analytical Services

Table 2: Summary of Non-CLP Analytical Services

Table 3: Sample Descriptions/Rationale

Figure 1: Proposed Monitoring Well and Public Supply Well Sample Location Map

Figure 2: Proposed Background Drinking Water Sample Location Map

Figure 3: Proposed On-Site Sample Location Map

ATTACHMENT 2: Sampling and Perfluorinated Compounds (PFC) Analytical Standard Operating Procedures (SOP)

ASTM Standard D 6418-04: Standard Practice for Using the Disposable En Core Sampler for Sampling and Storing Soil for Volatile Organic Analysis

EPA Environmental Response Team (ERT), SOPs 2044: Monitor Well Development; and 2048: Monitor Well Installation

EPA Region 2 Division of Environmental Science & Assessment (DESA), Monitoring & Assessment Branch (MAB), SOPs for Field Activities: Section 5 – Sampling Design and Quality Assurance Procedures; Section 6 – Ground Water Sampling; Section 7 – Sampling of Potable Water Supplies; and Section 14 – Soil Sampling

EPA Region 4 Science and Ecosystem Support Division (SESD), SOP No. SESDPROC-306-R3 – Wastewater Sampling

ALS Standard Operating Procedure *Perfluorinated Compounds by High Performance Liquid Chromatography/Tandem Mass Spectrometry (HPLC/MS/MS)*

ALS, Specific Conductance, µMHOS at 25 °C, 04-SPC, Revision 10

ATTACHMENT 3: Field Sampling Protocols to Avoid Cross-Contamination At Perfluorinated Chemical (PFC) Sites

ATTACHMENT 4: Project Action Limits

EPA Provisional Health Advisories for Perfluorooctanoic Acid (PFOA) and Perfluorooctane Sulfate (PFOS) in Drinking Water

ED_001670_00012770-00005

LIST OF ABBREVIATIONS AND ACRONYMS

ASR	Analytical Services Request
ASTM	American Society for Testing and Materials
CCB	Continuing Calibration Blank
CCV	Continuing Calibration Verification
CERCLA	Comprehensive Environmental Response, Compensation, and Liability Act
CLP	Contract Laboratory Program
COC	Chain-of-Custody
CRQL	Contract Required Quantitation Limit
DCN	Document Control Number
DESA	Division of Environmental Science and Assessment
DI	Deionized Water
DMC	Deuterated Monitoring Compound
DQI	Data Quality Indicator
DQO	Data Quality Objective
EDR	Environmental Data Resources, Inc.
EHS	Environmental Health and Safety
EPA	U.S. Environmental Protection Agency
ERT	Environmental Response Team
ESAT	Environmental Services Assistance Team
GC/ECD	Gas Chromatograph/Electron Capture Detector
GC/MS	Gas Chromatograph/Mass Spectrometer
GIS	Geographic Information Systems
GPS	Global Positioning System
HASP	Health and Safety Plan
HAZWOPER	Hazardous Waste Operations
HCl	Hydrochloric Acid
HRS	Hazard Ranking System
HSO	Health and Safety Officer
HWSB	Hazardous Waste Support Branch
HWSS	Hazardous Waste Support Section
ICB	Initial Calibration Blank
ICS	Incident Command Structure
ICV	Initial Calibration Verification
LC-MS/MS	Liquid Chromatography-tandem Mass Spectrometry
LCS	Laboratory Control Sample
LFB	Laboratory Fortified Blank
MAB	Monitoring & Assessment Branch
MCL	Maximum Contaminant Level
mg/kg	Milligrams per Kilogram
mg/L	Milligrams per Liter
MPC	Measurement Performance Criterion
MS/MSD	Matrix Spike/Matrix Spike Duplicate
NELAC	National Environmental Laboratory Accreditation Conference
NPL	National Priorities List

ED_001670_00012770-00006

LIST OF ACRONYMS (Concluded)

NYSDEC	New York State Department of Environmental Conservation
OSHA	Occupational Safety and Health Administration
OSWER	Office of Solid Waste and Emergency Response
%D	Percent Difference
%R	Percent Recovery
%RSD	Percent Relative Standard Deviation
PARCC	Precision, Accuracy, Representativeness, Completeness, Comparability
PCB	Polychlorinated Biphenyl
PFC	Perfluorinated Compound
PFOA	Perfluorooctanoic Acid
PID	Photoionization Detector
PM	Project Manager
PO	Project Officer
PQO	Project Quality Objective
PRS	Pre-Remedial Section
QA	Quality Assurance
QAO	Quality Assurance Officer
QAPP	Quality Assurance Project Plan
QA/QC	Quality Assurance/Quality Control
QC	Quality Control
RAB	Removal Action Branch
RI	Remedial Investigation
RL	Reporting Limit
RPD	Relative Percent Difference
RRF	Relative Response Factor
RSCC	Regional Sample Control Coordinator
RST	Removal Support Team
SAT	Site Assessment Team
SHSO	Site Health and Safety Officer
SM	Site Manager
SOP	Standard Operating Procedure
SOW	Statement of Work
START	Superfund Technical Assessment and Response Team
STR	Sampling Trip Report
SVOC	Semivolatile Organic Compound
TAL	Target Analyte List
TBD	To Be Determined
TDD	Technical Direction Document
UFP	Uniform Federal Policy
µg/kg	Micrograms per Kilogram
µg/L	Micrograms per Liter
VOC	Volatile Organic Compound
WESTON	Weston Solutions, Inc.

ED_001670_00012770-00007

CROSSWALK

The following table provides a "cross-walk" between the QAPP elements outlined in the Uniform Federal Policy for Quality Assurance Project Plans (UFP-QAPP Manual), the necessary information, and the location of the information within the text document and corresponding QAPP Worksheet. Any QAPP elements and required information that are not applicable to the project are circled.

QAPP Element(s) and Corresponding Section(s) of UFP-QAPP Manual	Required Information	Crosswalk to QAPP Section	Crosswalk to QAPP Worksheet No.
Project Management and Objectives			
2.1 Title and Approval Page	- Title and Approval Page	Approval Page	1
2.2 Document Format and Table of Contents 2.2.1 Document Control Format 2.2.2 Document Control Numbering System 2.2.3 Table of Contents 2.2.4 QAPP Identifying Information	- Table of Contents - QAPP Identifying Information	TOC Approval Page	2
2.3 Distribution List and Project Personnel Sign-Off Sheet 2.3.1 Distribution List 2.3.2 Project Personnel Sign-Off Sheet	- Distribution List - Project Personnel Sign-Off Sheet	Approval Page	3 4
2.4 Project Organization 2.4.1 Project Organizational Chart 2.4.2 Communication Pathways 2.4.3 Personnel Responsibilities and Qualifications 2.4.4 Special Training Requirements and Certification	- Project Organizational Chart - Communication Pathways - Personnel Responsibilities and Qualifications - Special Personnel Training Requirements	2	5 6 7 8
2.5 Project Planning/Problem Definition 2.5.1 Project Planning (Scoping) 2.5.2 Problem Definition, Site History, and Background	- Project Planning Session Documentation (including Data Needs tables) - Project Scoping Session Participants Sheet - Problem Definition, Site History, and Background - Site Maps (historical and present)	1	9 10
2.6 Project Quality Objectives and Measurement Performance Criteria 2.6.1 Development of Project Quality Objectives Using the Systematic Planning Process 2.6.2 Measurement Performance Criteria	- Site-Specific PQOs - Measurement Performance Criteria	3	11 12
2.7 Secondary Data Evaluation	- Sources of Secondary Data and Information - Secondary Data Criteria and Limitations	1 2	13

QAPP Element(s) and Corresponding Section(s) of UFP-QAPP Manual	Required Information	Crosswalk to QAPP Section	Crosswalk to QAPP Worksheet No.
2.8 Project Overview and Schedule 2.8.1 Project Overview 2.8.2 Project Schedule	- Summary of Project Tasks - Reference Limits and Evaluation - Project Schedule/Timeline	4	14 15 16
Measurement/Data Acquisition			
3.1 Sampling Tasks 3.1.1 Sampling Process Design and Rationale 3.1.2 Sampling Procedures and Requirements 3.1.2.1 Sampling Collection Procedures 3.1.2.2 Sample Containers, Volume, and Preservation 3.1.2.3 Equipment/Sample Containers Cleaning and Decontamination Procedures 3.1.2.4 Field Equipment Calibration, Maintenance, Testing, and Inspection Procedures 3.1.2.5 Supply Inspection and Acceptance Procedures 3.1.2.6 Field Documentation Procedures	- Sampling Design and Rationale - Sample Location Map - Sampling Locations and Methods/SOP Requirements - Analytical Methods/SOP Requirements - Field Quality Control Sample Summary - Sampling SOPs - Project Sampling SOP References - Field Equipment Calibration, Maintenance, Testing, and Inspection	5	17 18 19 20 21 22
3.2 Analytical Tasks 3.2.1 Analytical SOPs 3.2.2 Analytical Instrument Calibration Procedures 3.2.3 Analytical Instrument and Equipment Maintenance, Testing, and Inspection Procedures 3.2.4 Analytical Supply Inspection and Acceptance Procedures	- Analytical SOPs - Analytical SOP References - Analytical Instrument Calibration - Analytical Instrument and Equipment Maintenance, Testing, and Inspection	6	23 24 25
3.3 Sample Collection Documentation, Handling, Tracking, and Custody Procedures 3.3.1 Sample Collection Documentation 3.3.2 Sample Handling and Tracking System 3.3.3 Sample Custody	- Sample Collection Documentation Handling, Tracking, and Custody SOPs - Sample Container Identification - Sample Handling Flow Diagram - Example Chain-of-Custody Form and Seal	7	26 27
3.4 Quality Control Samples 3.4.1 Sampling Quality Control Samples 3.4.2 Analytical Quality Control Samples	- QC Samples - Screening/Confirmatory Analysis Decision Tree	5	28

QAPP Element(s) and Corresponding Section(s) of UFP-QAPP Manual	Required Information	Crosswalk to QAPP Section	Crosswalk to QAPP Worksheet No.
3.5 Data Management Tasks 3.5.1 Project Documentation and Records 3.5.2 Data Package Deliverables 3.5.3 Data Reporting Formats 3.5.4 Data Handling and Management 3.5.5 Data Tracking and Control	- Project Documents and Records - Analytical Services - Data Management SOPs	6	29 30
Assessment/Oversight			
4.1 Assessments and Response Actions 4.1.1 Planned Assessments 4.1.2 Assessment Findings and Corrective Action Responses	- Assessments and Response Actions - Planned Project Assessments - Audit Checklists - Assessment Findings and Corrective Action Responses	8	31 32
4.2 QA Management Reports	- QA Management Reports		33
4.3 Final Project Report	- Final Report(s)		
Data Review			
5.1 Overview			
5.2 Data Review Steps 5.2.1 Step I: Verification 5.2.2 Step II: Validation 5.2.2.1 Step IIa Validation Activities 5.2.2.2 Step IIb Validation Activities 5.2.3 Step III: Usability Assessment 5.2.3.1 Data Limitations and Actions from Usability Assessment 5.2.3.2 Activities	- Verification (Step I) Process - Validation (Steps IIa and IIb) Process - Validation (Steps IIa and IIb) Summary - Usability Assessment	9	34 35 36 37

QAPP Worksheet #1: Title and Approval Page

Title: UFP Quality Assurance Project Plan (QAPP)
Site Name/Project Name: Saint-Gobain Performance Plastics
Site Location: 14 McCaffrey Street, Hoosick Falls, NY 12090
Revision Number: 1
Revision Date: March 31, 2016

EPA Region 2 Pre-Remedial Section (PRS)
Lead Organization

Scott Snyder, Weston Solutions, Inc. (WESTON®) Region 2 Site Assessment Team (SAT)
Preparer's Name and Organizational Affiliation

31 March 2016
Preparation Date (Day/Month/Year)

Site Manager:

Signature

Scott Snyder/Region 2 SAT
Printed Name/Organization/Date

Program Manager/QA Representative:

Signature

Gerald Gilliland/Region 2 SAT
Printed Name/Organization/Date

EPA Region 2 Task Monitor:

Signature

James Desir/EPA Region 2 PRS
Printed Name/Organization/Date

Document Control Number: W0311.1E.00880

ED_001670_00012770-00011

QAPP Worksheet #2: QAPP Identifying Information

Site Name/Project Name: Saint-Gobain Performance Plastics
Site Location: 14 McCaffrey Street, Hoosick Falls, NY 12090
Operable Unit: 00
Title: UFP QAPP
Revision Number: 1
Revision Date: March 31, 2016

1. **Identify guidance used to prepare QAPP:**
   - Uniform Federal Policy for Quality Assurance Project Plans (UFP-QAPP Manual)
   - EPA Region 2 Division of Environmental Science & Assessment (DESA) Monitoring & Assessment Branch (MAB): Standard Operating Procedures (SOP) for Field Activities (Region 2 SOPs for Field Activities)
   - EPA Environmental Response Team (ERT) SOPs
   - EPA Region 4 Science and Ecosystem Division (SESD) SOP for Wastewater Sampling
   - EPA Contract Laboratory Program Statement of Work SOM02.3 (CLP SOW SOM02.3)
   - EPA CLP SOW ISM02.3
   - EPA Region 2 Data Validation SOPs
   - ALS Environmental SOP LCP-PFC

2. **Identify regulatory program:** EPA Region 2

3. **Identify approval entity:** EPA Region 2

4. **Indicate whether the QAPP is a generic or a site-specific QAPP.** Site-Specific

5. **List dates of scoping sessions that were held:** February 12, 2016 and March 21 and 22, 2016

6. **List dates and titles of QAPP documents written for previous site work, if applicable:**

   UFP-QAPP, Saint-Gobain Performance Plastics, Ballfield Soil Sampling, February 2016

7. **List organizational partners (stakeholders) and connection with lead organization:**

   New York State Department of Environmental Conservation (NYSDEC)

   New York State Department of Health (NYSDOH)

   Village of Hoosick Falls

8. **If any required QAPP elements and required information are not applicable to the project, then provide an explanation for their exclusion below:**

   None

9. **Document Control Number:** W0311.1E.00880

ED_001670_00012770-00012

QAPP Worksheet #3: Distribution List

[List those entities to which copies of the approved QAPP, subsequent QAPP revisions, addenda, and amendments are sent]

QAPP Recipient	Title	Organization	Telephone Number	E-mail Address	Document Control Number
James Desir	Task Monitor	EPA Region 2	(212) 637-4342	Desir.James@epa.gov	W0311.1E.00880
Gerry Gilliland	PM, QA Representative/ Technical Reviewer	Region 2 SAT	(732) 417-5826	Gerry.Gilliland@westonsolutions.com	W0311.1E.00880
Scott Snyder	Site Manager, SHSO	Region 2 SAT	(732) 417-5814	S.Snyder@westonsolutions.com	W0311.1E.00880
TBD	Field Personnel	Region 2 SAT	TBD	TBD	W0311.1E.00880
TBD	Field Personnel	Region 2 SAT	TBD	TBD	W0311.1E.00880
TBD	Field Personnel	Region 2 SAT	TBD	TBD	W0311.1E.00880
TDD No. 0004/1601-01 file	Region 2 SAT TDD file	Region 2 SAT	N/A	N/A	W0311.1E.00880

EPA – U.S. Environmental Protection Agency
PM – Project Manager
QA – Quality Assurance
SAT – Site Assessment Team
SHSO – Site Health and Safety Officer
TBD – To Be Determined
TDD – Technical Direction Document

ED_001670_00012770-00013

QAPP Worksheet #4: Project Personnel Sign-Off Sheet

[Copies of this form signed by key project personnel from each organization to indicate that they have read the applicable sections of the QAPP and will perform the tasks as described; add additional sheets as required. Ask each organization to forward signed sheets to the central project file.]

Organization: EPA Region 2 / WESTON Region 2 SAT

Project Personnel	Title	Telephone Number	Signature	Date QAPP Read
James Desir	Task Monitor, EPA Region 2	(212) 637-4342		
Gerry Gilliland	PM, QA Representative, Region 2 SAT	(732) 417-5826		
Scott Snyder	Field Personnel, Region 2 SAT	(732) 417-5828		
TBD	Field Personnel, Region 2 SAT	TBD		
TBD	Field Personnel, Region 2 SAT	TBD		
TBD	Field Personnel Region 2 SAT	TBD		

EPA – U.S. Environmental Protection Agency
SAT – Site Assessment Team
SHSO – Site Health and Safety Officer
TBD – To Be Determined

QAPP Worksheet #5: Project Organizational Chart

Identify reporting relationship between all organizations involved in the project, including the lead organization and all contractor and subcontractor organizations. Identify the organizations providing field sampling, on-site and off-site analysis, and data review services, including the names and telephone numbers of all project managers, project team members, and/or project contacts for each organization.

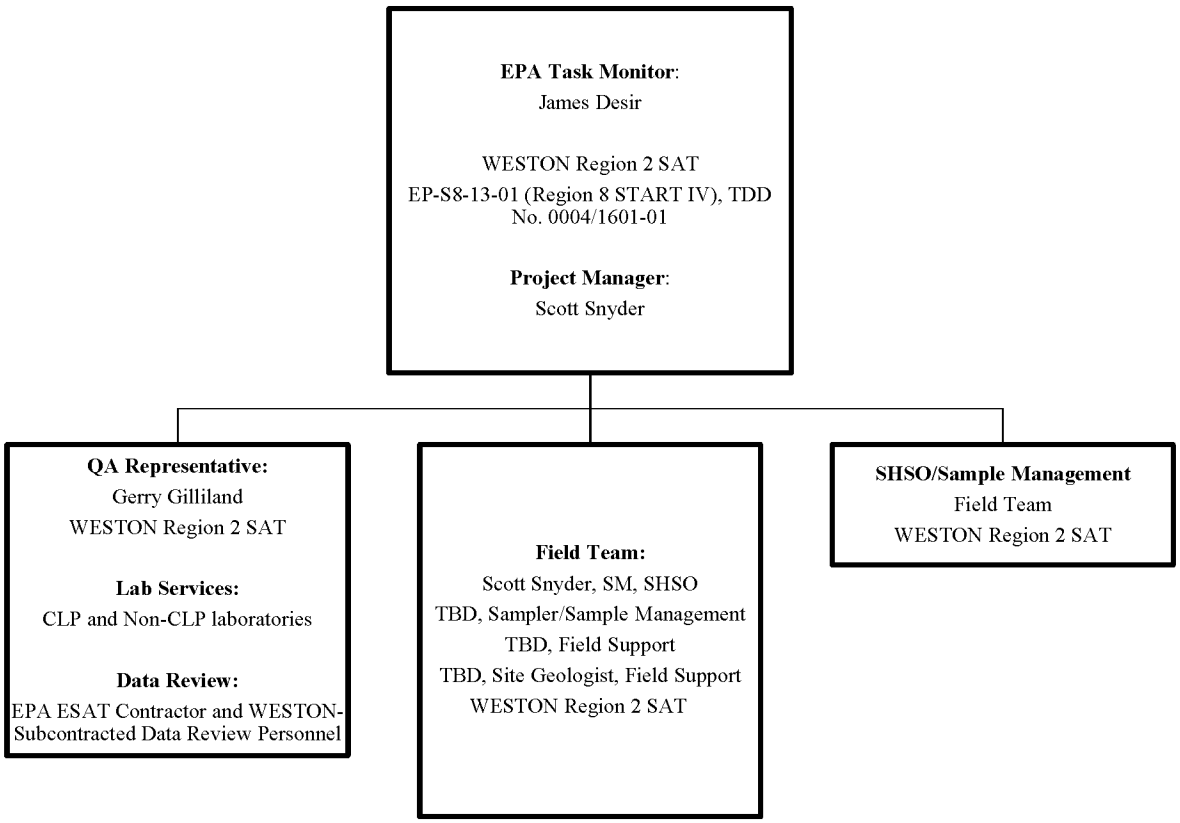

Acronyms:

CLP – Contract Laboratory Program
EPA – U.S. Environmental Protection Agency
ESAT – Environmental Services Assistance Team
QA – Quality Assurance
SAT – Site Assessment Team
SHSO – Site Health & Safety Officer
SM – Site Manager
START – Superfund Technical Assessment and Response Team
TBD – To Be Determined

QAPP Worksheet #6: Communication Pathways

Communication Drivers	Responsible Entity	Name	Phone Number	Procedure
Point of contact with EPA Contracting Officer Representative	PM/QA, Region 2 SAT Region 2 SAT	Gerry Gilliland	(732) 417-5826	All technical, QA, and decision-making matters in regard to the project (verbal, written, or electronic)
Adjustments to QAPP	PM/QA, Region 2 SAT SM Region 2 SAT	Gerry Gilliland Scott Snyder	(732) 417-5826 (732) 417-5828	QAPP approval dialogue
Health and Safety On-Site Meeting	SHSO, Region 2 SAT	Scott Snyder	(732) 417-5828	Explain/review site hazards, personal protective equipment, hospital location, etc.

PM –Program Manager
QA – Quality Assurance
QAPP – Quality Assurance Project Plan
SAT – Site Assessment Team
SHSO – Site Health and Safety Officer
SM – Site Manager

ED_001670_00012770-00016

QAPP Worksheet #7: Personnel Responsibilities and Qualifications Table

Name	Title	Organizational Affiliation	Responsibilities	Education and Experience Qualifications
James Desir	EPA Task Monitor	EPA Region 2	All project coordination, direction, and decision making	NA
Gerry Gilliland	PM/QA, Region 2 SAT	Weston Solutions, Inc.	QA oversight of sample collection and sample management	29 Years*
Scott Snyder	Site Manager, Region 2 SAT	Weston Solutions, Inc.	Project/Site Manager, Field QA, SHSO, and sample management	16 Years*
TBD	Field Personnel, Region 2 SAT	Weston Solutions, Inc.	Sample collection and sample management	TBD
TBD	Field Personnel, Region 2 SAT	Weston Solutions, Inc.	Sample collection and sample management	TBD
TBD	Field Personnel, Region 2 SAT	Weston Solutions, Inc.	Site Geologist, sample collection	TBD

* The Region 2 SAT Program Manager (PM) retains copies of all Region 2 SAT member resumés.

EPA – U.S. Environmental Protection Agency
QA – Quality Assurance
SAT – Site Assessment Team
SHSO – Site Health and Safety Officer
TBD – To Be Determined

ED_001670_00012770-00017

QAPP Worksheet #8: Special Personnel Training Requirements Table

Project Function	Specialized Training By Title or Description of Course	Training Provider	Training Date	Personnel/ Groups Receiving Training	Personnel Titles/ Organizational Affiliation	Location of Training Records/ Certificates[1]
QAPP Training	Personnel are introduced to provisions, requirements, and responsibilities detailed in the UFP QAPP, and to relationships between UFP QAPPs, SOPs, work plans, and Generic QAPP. QAPP refresher training will be presented to Region 2 SAT personnel following a major QAPP revision, if applicable.	WESTON Region 2 SAT	As needed	Region 2 SAT field personnel upon initial employment and as refresher training, as needed	Weston Solutions, Inc.	N/A
Health and Safety Training	Health and safety training will be provided to ensure compliance with Occupational Safety and Health Administration (OSHA) as established in 29 CFR §1910.120.	WESTON HSO	Initial 40-hour training and annual 8-hour refresher	Region 2 SAT employees performing HAZWOPER work	Weston Solutions, Inc.	WESTON EHS Database
Others	Scribe, ICS 100 and 200, and Air Monitoring Equipment Training provided to all employees	WESTON and online training	Upon initial employment and as needed	Region 2 SAT employees as needed		
	Dangerous Goods Shipping	WESTON HSO	Every 2 years	Region 2 SAT employees as needed		

EHS – Environmental Health and Safety
HAZWOPER – Hazardous waste operations
HSO – Health and Safety Officer
ICS – Incident Command Structure
OSHA – Occupational Safety and Health Administration
QAPP – Quality Assurance Project Plan
SAT – Site Assessment Team
SOP – Standard operating procedure
UFP – Uniform Federal Policy

ED_001670_00012770-00018

QAPP Worksheet #9: Project Scoping Session Participants Sheet

Site Name/Project Name: Saint-Gobain Performance Plastics
Site Location: 14 McCaffrey Street, Hoosick Falls, NY 12090
Operable Unit: 00
Date of Sessions: February 12, March 21, and March 22, 2016
Scoping Session Purpose: To discuss questions, comments, and assumptions regarding technical issues involved with the investigation.

Name	Title	Affiliation	Phone #	E-mail Address	*Project Role
Ildefonso Acosta	NPL Coordinator	EPA Region 2	(212) 637-4344	Acosta.Ildefonso@epa.gov	NPL Coordinator
Mel Hauptman	Pre-Remedial Section Chief	EPA Region 2	(212) 637-4338	Hauptman.Mel@epa.gov	Section Chief
James Desir	Site Assessment Manager	EPA Region 2	(212) 637-4342	Desir.James@epa.gov	Task Monitor
Gerry Gilliland	Senior Technical Manager	WESTON Region 2 SAT	(732) 417-5826	Gerry.Gilliland@ westonsolutions.com	Project Manager
Scott Snyder	Principal Project Scientist	WESTON Region 2 SAT	(732) 417-5828	S.Snyder@westonsolutions.com	Site Manager

EPA – U.S. Environmental Protection Agency
NPL – National Priorities List
SAT – Site Assessment Team

Comments/Decisions: Through Contract No. EP-S8-13-01 (Region 8 START IV), EPA Region 2 has tasked WESTON Region 2 SAT with an investigation of the Saint-Gobain Performance Plastics (SGGP) site in Hoosick Falls, NY. On February 12, 2016 and March 21 and 22, 2016 via teleconference, EPA directed WESTON to develop this QAPP for installation and sampling of monitoring wells in the vicinity of the SGPP facility and nearby public supply wells (PSWs) operated by the Village of Hoosick Falls; collection of a ground water sample from a U.S. Geological Survey (USGS) observation well located north of the SGPP facility; collection of direct-push soil samples from SGPP facility property; collection of ground water samples from existing monitoring wells installed on SGPP facility property; collection of wastewater samples from SGPP facility manholes and sewage ejector pit; and the collection of samples from the active PSWs and an adjacent test well. The samples will be collected to confirm that there is an observed release to the ground water pathway and to document actual contamination of public drinking water wells. Background drinking water well sample locations were determined during a pre-sampling reconnaissance, and will be collected from an adjacent formation believed to be interconnected with the aquifer of concern. All samples will be collected according to the standard operating procedures (SOPs) included in this QAPP. Quality assurance/quality control (QA/QC) samples will be collected as required.

All samples collected by Region 2 SAT personnel will be analyzed for Organic Target Analyte List (TAL) volatile organic compounds (VOC), semivolatile organic compounds (SVOC), and Aroclors, and Inorganic TAL analytes (including Hg) by EPA Contract Laboratory Program (CLP) laboratories; and for PFCs by a WESTON-subcontracted laboratory. Soil samples will also be analyzed for total organic carbon (TOC), grain size distribution, pH, and conductivity by a non-CLP laboratory. The pH and conductivity of the ground water samples will be determined in the field using a calibrated water quality meter. The samples will be collected for a definitive data QA Objective. Field duplicate and matrix spike/matrix spike duplicate (MS/MSD) samples (as required) will be collected at a rate of one per twenty samples per matrix or one per batch of less than twenty samples. All samples will be collected in appropriate containers according to the CLP Sampler's Guide, regional guidance and laboratory guidance. Sample containers for PFC analysis will be provided by the subcontracted laboratory. Sampling personnel will take precautions to minimize PFC cross-contamination as outlined in Attachment 3: *Field Sampling Protocols to Avoid Cross-Contamination at PFC Sites*. Region 2 SAT will request expedited turnaround times (TAT)

for validated CLP analytical results (i.e., 28 days from sample receipt at the laboratory). For PFC analytical results, Region 2 SAT will request TATs from end of sampling of 7 days for preliminary data, 14 days for final laboratory data packages, and 28 days for validated data. CLP analytical data will be validated by EPA's Environmental Services Assistance Team (ESAT) contractor. PFC analytical data will be validated by WESTON-subcontracted data validation personnel. Results will be made available to EPA upon completion of validation.

The analytical results will be compared to background concentrations, Maximum Contaminant Levels (MCL) and other Hazard Ranking System (HRS) benchmarks, and EPA provisional health advisories for PFOA and PFOS in drinking water.

Action Items: EPA will assist in gaining access for monitoring well installation on Village of Hoosick Falls and private properties and soil and ground water sampling activities at the SGPP facility. Region 2 SAT will complete site reconnaissance activities and submit site-specific Analytical Services Request (ASR) forms for laboratory procurement in late March 2016. Region 2 SAT will schedule the direct-push soil sampling activities to begin the week of April 4, 2016. Monitoring well installation activities are tentatively scheduled to begin the week of April 11, 2016. Ground water sampling activities are tentatively scheduled to begin the week of April 25, 2016.

Consensus Decisions: EPA directed Region 2 SAT to collect the samples necessary to confirm observed release to the aquifer of concern and to document actual contamination of the PSWs that is at least partially attributable to the SGPP facility.

QAPP Worksheet #10: Problem Definition

PROBLEM DEFINITION

There have been significant detections of PFOA in drinking water samples taken from the Hoosick Falls municipal water supply, private ground water wells within the village, and in the ground water beneath the SGPP facility at 14 McCaffrey Street. The Village of Hoosick Falls PSWs lie approximately 0.35 mile south of the SGPP facility property. EPA will be investigating the SGPP facility where Teflon-coated materials and related products had been produced for many years. There have been reports of a powder-like plume, which may have contained PFOA, emanating from the facility and settling in the surrounding valley and possibly the Hoosic River. There have also been reports of possibly PFOA-contaminated materials being washed directly on the ground surface on a hillside directly behind the SGPP facility without runoff containment. As there are other possible sources of PFCs in the area, sampling is required to document that the PFOA detected in municipal water supply is at least partially attributable to the SGPP facility.

SITE HISTORY/CONDITIONS

Multiple companies in Hoosick Falls, New York, have produced Teflon-coated materials and related products since the 1950s and 1960s, and may have contributed to ground water contamination. PFOA may have been utilized in the manufacturing processes employed at some of these facilities. PFOA is a man-made chemical used to manufacture a variety of commercial and consumer products, including stain and water repellants for carpet and upholstery, paper products, fire-fighting foams, and non-stick cookware. PFOA and related compounds are persistent in water and soil, and resistant to typical environmental degradation processes. PFOA poses potential adverse effects for the environment and human health based on its toxicity, mobility, and bioaccumulation potential. PFOA is water-soluble and can readily migrate from soil to ground water. It exists as a white powder or waxy white solid at room temperature.

It has been reported that there were historic releases of a powder-like plume emanating from smokestacks associated with manufacturing operations near the PSWs. In addition, the practice of cleaning or washing smokestack filters outdoors without containing runoff, as well as flushing of material down storm drains, reportedly occurred in the past.

In 2015, analysis of ground water beneath the SGPP facility reported PFOA concentrations as high as 18,000 parts per trillion (ppt). The Village of Hoosick Falls operates three public supply wells (Well Nos. 3, 6, and 7); all three wells are located in a wellfield approximately 0.35 mile south of the SGPP facility. The wells withdraw water from a more productive portion of the unconfined sand and gravel aquifer, with potential well yields of greater than 100 gallons per minute. Complete well construction information is available for Well No. 7 and the Village Test Well. The well and pump depths of Well Nos. 3 and 6 are available through secondary sources. The aquifer is under the influence of the Hoosic River, which provides additional water pumping-induced recharge. The Hoosick Falls public well system serves approximately 4,400 people. In 2014, a village resident submitted a ground water sample from a private domestic well for chemical analysis. Results showed the presence of PFOA. Subsequent sampling and

analysis of the public water supply in June 2015 by the New York State Department of Health (NYSDOH) reported the presence of PFOA at a maximum concentration of 662 ppt. PFOA concentrations in four of the five public water samples exceeded the EPA provisional health advisory for PFOA in drinking water of 400 ppt. A summary of the maximum NYSDOH sampling results is presented in Table 1.

Table 1

Sample Location	PFOA Concentration (ppt)
Supply Well No. 3 Raw Water	151
Supply Well No. 7 Raw Water	620
Water Treatment Plant Treated Water	662
Tap Water from Building on Village Water System	612
Tap Water from Building on Village Water System	620

ppt = parts per trillion
EPA provisional health advisory = 400 ppt

According to New York State Department of Environmental Conservation (NYSDEC) on-line well records, there are approximately 21 domestic wells within 4 miles of the SGPP facility on Waterworks Road. [Note: The NYSDEC requirement for well records took effect in January 2000; therefore, wells installed prior to that date might not be counted in the on-line system]. Well construction information for the domestic wells is not currently available. During reconnaissance and sampling activities, Region 2 SAT will gather all available information related to domestic wells investigated. NYSDOH sampling of eight domestic wells in the southwest portion of the Village of Hoosick Falls reported the presence of PFOA in three of the wells at concentrations ranging from 58 to 194 ppt. The Hoosick Falls Central School District, located approximately 2 miles southwest of the public supply wells, operates two wells located on the school campus that are not connected to the municipal water system. Samples collected from these wells by NYSDOH reported non-detect values for PFOA. A search of EPA's Envirofacts database lists five facilities in Hoosick Falls designated as manufacturers of plastic foam products or coated fabrics under the Standard Industrial Classification (SIC) System; it is possible that PFOA was utilized by these facilities.

Investigation is required to determine if PFOA was deposited on the soils of the SGPP facility, and subsequently migrated to the aquifer of concern and the PSWs. Based on reports of possibly PFOA-contaminated material being discharged to storm drains, wastewater samples will collected from sanitary and storm water manholes and the facility sewage ejector pit.

PROJECT DESCRIPTION

This phase of the project consists of monitoring well installation and sampling, direct-push soil sampling, wastewater sampling, and potable well sampling. Seven monitoring wells will be installed in the vicinity of SGPP and the PSWs. Monitoring well locations were chosen to characterize ground water in the vicinity of the SGPP facility, to characterize ground water between SGPP and the PSWs, and to characterize background conditions. The monitoring wells

will be screened at a similar elevation as the PSWs. The seven existing monitoring wells installed on SGPP property will also be sampled to characterize shallow ground water beneath the facility. A U.S. Geological Survey (USGS) observation well located north of the site on the west bank of the Hoosic River and a village test well will also be designated for sampling.

Monitoring wells will be installed and developed according to EPA ERT SOPs 2048—Monitor Well Installation and 2044—Monitor Well Development. Ground water samples from the on-site and EPA monitoring wells, and the USGS observation well, will be collected according to EPA Region 2 SOPs for Field Activities, Section 6—Ground Water Sampling. EPA and SGPP monitoring well locations are depicted on Figures 1 and 2, respectively.

Potable well samples will be collected from the three active municipal wells (i.e., Well Nos. 3, 6, and 7), as well as the test well adjacent to the municipal baseball fields. Region 2 SAT will collect raw ground water samples (i.e., prior to water treatment) directly into sample containers from sampling spigots as close as possible to the wellhead, according to EPA Region 2 for Field Activities, Section 7 – Sampling of Potable Water Supplies. Up to four background drinking water samples will be collected. Prior to sampling, EPA and Region 2 SAT will mobilize to the site area and approach residences that are outside the municipal water supply service area and believed to operate domestic drinking water wells that withdraw water from sand and gravel deposits believed to be interconnected with the aquifer of concern. EPA and Region 2 SAT will interview the residents to determine if well construction information is available, and if the well is deemed appropriate for evaluating background conditions, secure access for sampling. Potable well sample locations are depicted on Figures 1and 2.

Soil samples will be collected using direct-push technology from 15 boreholes advanced throughout the SGPP property. Three of the borings will be advanced on the hillside believed to be where smokestack filters were rinsed on the ground surface. The remaining 12 boreholes will be advanced to characterize the soil on all sides of the facility, including in the vicinity of a historical stormwater pipe. Because the objective of the soil sampling effort is to provide documentation of a contaminated soil source for HRS purposes and not to delineate the extent of contamination, soil samples will be collected every 5 feet, beginning with the 0- to 2-foot interval (i.e., 0′–2′, 5′–7′, 10′–12′, etc.) down to the water table. Soil samples will be collected according to EPA Region 2 SOPs for Field Activities, Section 14—Soil Sampling and according to ASTM D 6418-04: and according to Standard Practice for Using the Disposable En Core Sampler for Sampling and Storing Soil for Volatile Organic Analysis. Direct-push borehole locations are shown on Figure 2.

Soil samples will be obtained using direct-push technology. Soil borings will be advanced to the top of the water table; depth to water at the site varies and was observed to range from approximately 20 to 30 feet on northern, uphill portions of the property to approximately 11 to 12 feet on southern, downhill portions of the property during the summer months. VOC soil sample fractions will be collected with dedicated En Core sampling devices. Other soil sample fractions will be homogenized in stainless steel (not aluminum) pans, which will be decontaminated after each use, with dedicated HDPE scoops prior to insertion into the appropriate sample containers. In order to minimize PFC cross-contamination, the PFC soil

sample fraction will be collected first after homogenization, prior to opening the En Core sample packets and sample collection containers, which might contain PFC materials.

Wastewater samples will be collected from one SGPP facility sanitary manhole, two stormwater manholes, and the sewage ejector pit. Wastewater samples will be collected according to EPA Region 4 SESD Wastewater Sampling SOP. Wastewater sample locations are depicted on Figure 2.

Region 2 SAT will collect rinsate blanks to demonstrate that non-dedicated sampling equipment (e.g., direct-push cutting shoe, submersible pump) are free of contamination. The water utilized for the final step of decontamination of non-dedicated sampling equipment will also be sampled to demonstrate that it is free of contamination, due to the ubiquity of PFCs in plastics. In order to minimize the possibility of introducing PFOA contamination into samples, the following products will be forbidden on site: products known to contain fluoropolymers, aluminum foil, chemical (blue) ice, pre-wrapped food or snacks, cosmetics, moisturizers, water-resistant or waterproof outerwear, Post-it-Notes and waterproof logbooks, and other materials outlined in Attachment 3. Collection of locational data using Global Positioning System (GPS) technology and photo documentation of the sampling and other site activities will also be performed. All samples will be analyzed by off-site laboratories for Organic TAL VOCs, SVOCs, and Aroclors; Inorganic TAL (including Hg) parameters; and PFCs. The soil samples will also be analyzed for TOC, grain size distribution, pH, and conductivity by an off-site laboratory. The pH and conductivity of the ground water samples will be determined in the field using a calibrated water quality meter. Direct-push soil sampling activities are tentatively scheduled to begin the week of April 4, 2016. Monitoring well installation activities are tentatively scheduled to begin the week of April 11, 2016. Ground water sampling activities are tentatively scheduled to begin the week of April 25, 2016.

PROJECT DECISION STATEMENTS

EPA Region 2 Pre-Remedial Section will use the analytical data from this investigation to evaluate the SGPP site according to the Hazard Ranking System (HRS) and to support inclusion of the site on the National Priorities List (NPL), if warranted.

ED_001670_00012770-00025

QAPP Worksheet #11: Project Quality Objectives/Systematic Planning Process Statement

Overall project objectives include: Sampling will be conducted by Region 2 SAT as part of an investigation to evaluate SGPP according to the HRS.

Who will use the data? Data will be used by EPA Region 2 Pre-Remedial Section (PRS).

What will the data be used for? The analytical data from this investigation will be used to support inclusion of SGPP on the NPL, if warranted.

What types of data are needed?

Matrix:	Ground water, soil, and wastewater
Type of Data:	Definitive data for all samples
Analytical Techniques:	Off-site laboratory analyses
Parameters:	Organic TAL VOCs, SVOCs, and Aroclors; Inorganic TAL (including Hg); PFCs; pH, conductivity, TOC, and grain size (soil only)
Type of sampling equipment:	Soil samples – direct-push sampling equipment; En Core sampling devices, dedicated HDPE scoops, stainless steel bowls, and sample jars Ground water samples – GeoTech® stainless-steel submersible pump (or equivalent pump without PFC-containing components), dedicated (non-Teflon) HDPE tubing, and sample jars Wastewater samples – stainless-steel direct-dip sampler or similar device, sample jars
Access Agreement:	EPA Region 2 will assist with obtaining access to all sampling locations.
Sampling locations:	Samples will be collected from locations as outlined in the figures and tables presented in Attachment 1.

How much data are needed? Proposed sample location maps can be found in Attachment 1. Approximately 76 soil, 26 ground water (including QA/QC samples), and four waste water samples will be collected.

How "good" does the data need to be in order to support the environmental decision? Sampling/analytical measurement performance criteria for precision, accuracy, representativeness, completeness, and comparability (PARCC) parameters will be established. Refer to Worksheet #12, criteria for performance measurement for definitive data.

Where, when, and how should the data be collected/generated? The sample locations are shown on the proposed sample location maps presented in Attachment 1. The samples to be collected from the locations have been discussed with EPA. Direct-push soil sampling activities

QAPP Worksheet #11: Project Quality Objectives/Systematic Planning Process Statement (Concluded)

are tentatively scheduled to begin the week of April 4, 2016. Monitoring well installation activities are tentatively scheduled to begin the week of April 11, 2016. Ground water sampling activities are tentatively scheduled to begin the week of April 25, 2016.
All samples will be collected using methods outlined in the SOPs.

Who will collect and generate the data? The samples will be collected by Region 2 SAT. Samples for Organic TAL VOCs, SVOCs, and Aroclors, and Inorganic TAL (including Hg) will be analyzed by the assigned CLP laboratories; EPA Region 2 or its contractor will perform data validation. PFC analyses will be performed by the assigned WESTON-subcontracted laboratory. Data validation for PFC results will be performed by WESTON-subcontracted data validation personnel.

How will the data be reported? All CLP data will be reported by the assigned laboratories through EPA Region 2, and validated data will be reported to EPA PRS and Region 2 SAT via the Region 2 Environmental Data Services website. All non-CLP data will be reported directly to WESTON Region 2 SAT by the subcontracted laboratories. Upon completion of all data validation, Region 2 SAT will prepare an HRS Documentation Record Package with Sample Location Maps

How will the data be archived? Region 2 SAT will compile electronic deliverables and data files and deliver it to EPA on compact disc.

ED_001670_00012770-00027

QAPP Worksheet #12: Measurement Performance Criteria Table

Matrix	Aqueous/Soil
Analytical Group[1]	Organic TAL VOCs
Concentration Level	Trace and Low/Medium

Sampling Procedure[1]	Analytical Method/SOP[2]	Data Quality Indicators (DQI)	Measurement Performance Criteria (MPC)	QC Sample and/or Activity Used to Assess Measurement Performance	QC Sample Assesses Error for Sampling (S), Analytical (A) or both (S&A)
EPA Region 2 SOPs for Field Activities: Sections 6, 7, 11, 13, and 14 ASTM D 6418-04: Standard Practice for Using the Disposable En Core Sampler for Sampling and Storing Soil for Volatile Organic Analysis	CLP SOW SOM02.3	Accuracy	Result ≤ CRQL (≤ 2x CRQL for methylene chloride, 2-butanone, and acetone)	Rinsate/Method/ Instrument Blanks	S & A
		Precision	Use prof. judgement for RPD ≥ 50%	Field Duplicate	S & A
		Accuracy	%RSD ≤ 20% or 40% (3)	Initial Calibration	A
		Accuracy Precision	RRF ≥ 0.010 %D -50% – 50%	Closing Continuing Calibration Verification (CCV)	A
		Accuracy	Compound-specific %R (3)	Deuterated Monitoring Compounds (DMC)	A
		Accuracy	Area counts 50–200%	Internal Standards	A

1 Reference number from QAPP Worksheet #21

2 Reference number from QAPP Worksheet #23

3 Refer to EPA Region 2 Hazardous Waste Support Section (HWSS) SOP No. HW-33 Revision 3: Low/Medium Volatile Data Validation (March 2013), or most recent revision, for specific criteria. The document is available at https://www.epa.gov/quality/managing-quality-environmental-data-epa-region-2

CRQL – Contract-Required Quantitation Limit
%D – Percent Difference
%R – Percent Recovery
%RSD – Percent Relative Standard Deviation
RPD – Relative Percent Difference
RRF – Relative Response Factor

QAPP Worksheet #12: Measurement Performance Criteria Table (continued)

Matrix	Aqueous/Soil
Analytical Group	Organic TAL SVOCs
Concentration Level	Low/Medium

Sampling Procedure[1]	Analytical Method/SOP[2]	Data Quality Indicators (DQI)	Measurement Performance Criteria (MPC)[3]	QC Sample and/or Activity Used to Assess Measurement Performance	QC Sample Assesses Error for Sampling (S), Analytical (A) or both (S&A)
EPA Region 2 SOPs for Field Activities: Sections 6, 7, 11, 13, and 14	CLP SOW SOM02.3	Accuracy	Result ≤ CRQL (≤ 5x CRQL for bis[2-ethylhexyl] phthalate)	Rinsate/Method/ Instrument Blanks	S & A
		Precision	Use prof. judgement for RPD ≥ 50%	Field Duplicate	S & A
		Accuracy	%RSD ≤ 20% or 40% (3)	Initial Calibration	A
		Accuracy Precision	RRF ≥ 0.010 %D -50 – 50%	Closing CCV	A
		Accuracy	Compound-specific %R (3)	Deuterated Monitoring Compounds (DMC)	A
		Accuracy	Area counts 50–200%	Internal Standards	A

1 Reference number from QAPP Worksheet #21

2 Reference number from QAPP Worksheet #23

3 Refer to EPA Region 2 HWSS SOP No. HW-35 Revision 2: Semivolatile Data Validation (March 2013), or most recent revision, for specific criteria. The document is available at https://www.epa.gov/quality/managing-quality-environmental-data-epa-region-2

CRQL – Contract-Required Quantitation Limit
%D – Percent Difference
%R – Percent Recovery
%RSD – Percent Relative Standard Deviation
RPD – Relative Percent Difference
RRF – Relative Response Factor

QAPP Worksheet #12: Measurement Performance Criteria Table (continued)

Matrix	Aqueous/Soil
Analytical Group	Organic TAL Aroclors
Concentration Level	Low/Medium

Sampling Procedure[1]	Analytical Method/SOP[2]	Data Quality Indicators (DQIs)	Measurement Performance Criteria (MPC)[3]	QC Sample and/or Activity Used to Assess Measurement Performance	QC Sample Assesses Error for Sampling (S), Analytical (A) or both (S&A)
EPA Region 2 SOPs for Field Activities: Sections 6, 7, 11, 13, and 14	CLP SOW SOM02.3	Accuracy	Result ≤ CRQL for all compounds	Rinsate/Method/ Instrument Blanks	S & A
		Precision	Use prof. judgement for RPD ≥ 50%	Field Duplicate	S & A
		Accuracy	%RSD ≤ 20%	Initial Calibration	A
		Precision	%D, time elapsed, and RT within acceptable limits (3)	Continuing Calibration Verification (CCV)	A
		Accuracy	Use prof. judgement	Matrix spike/Matrix spike duplicate (MS/MSD)	S & A
		Accuracy	%R 30–150%; RT within RT window	Surrogate Compounds	A
		Accuracy	Lower Acceptance Limit < %R < Upper Acceptance Limit (3)	Laboratory Control Sample (LCS)	A

1 Reference number from QAPP Worksheet #21

2 Reference number from QAPP Worksheet #23

* Refer to EPA Region 2 HWSS SOP No. HW-37 Revision 3: Polychlorinated Biphenyl (PCB) Aroclor Data Validation (May 2013), or most recent revision, for specific criteria. The document is available at https://www.epa.gov/quality/managing-quality-environmental-data-epa-region-2

QAPP Worksheet #12: Measurement Performance Criteria Table (continued)

Matrix	Aqueous/Soil
Analytical Group	Inorganic TAL (including Hg)
Concentration Level	Low/Medium

Sampling Procedure[1]	Analytical Method/SOP[2]	Data Quality Indicators (DQIs)	Measurement Performance Criteria (MPC)[3]	QC Sample and/or Activity Used to Assess Measurement Performance	QC Sample Assesses Error for Sampling (S), Analytical (A) or both (S&A)
EPA Region 2 SOPs for Field Activities: Sections 6, 7, 11, 13, and 14	CLP SOW ISM02.3	Accuracy	Result ≤ CRQL for all analytes	Rinsate Blank	S & A
		Precision	RPD ≤ 20% (aqueous) RPD ≤ 50% (solid)	Field Duplicate	S & A
		Accuracy Precision	%R 90–110% (85–115% for Hg) %D -30 – 30%; y-intercept ≤ CRQL	Calibration	A
		Accuracy	Result ≤ MDL for all analytes	Calibration/Preparation Blanks	A
		Accuracy	%R 80–120%	Interference Check Sample (does not apply to Hg)	A
		Accuracy	%R 70–130% (50–150% for Ag/Sb)	Laboratory Control Sample (does not apply to Hg)	A
		Precision	RPD ≤ 20% (aqueous) RPD ≤ 35% (solid)	Laboratory Duplicate Sample	A
		Accuracy	%R 75–125%	Spike Samples (matrix/post-digestion/post-distillation)	S & A

1 Reference number from QAPP Worksheet #21

2 Reference number from QAPP Worksheet #23

3 Refer to EPA Region 2 HWSS SOP No. HW-2a Revision 15: ICP-AES Data Validation (December 2012) and SOP No. HW-2c Revision 15: Mercury and Cyanide Data Validation (December 2012) for specific criteria. The documents are available at https://www.epa.gov/quality/managing-quality-environmental-data-epa-region-2

Hg – Mercury; MDL – Method Detection Limit

QAPP Worksheet #12: Measurement Performance Criteria Table (continued)

Matrix	Aqueous/Soil
Analytical Group	Perfluorinated Compounds (PFCs)
Concentration Level	Low (ng/L/µg /kg)

Sampling Procedure[1]	Analytical Method/SOP[2]	Data Quality Indicators (DQIs)	Measurement Performance Criteria	QC Sample and/or Activity Used to Assess Measurement Performance	QC Sample Assesses Error for Sampling (S), Analytical (A) or both (S&A)
EPA Region 2 SOPs for Field Activities: Sections 6, 7, 11, 13, and 14 WESTON Field Sampling Protocols to Avoid Cross-Contamination at Perfluorinated Chemical (PFC) Sites	ALS Evnironmental SOP ID: LCP-PFC, *Perfluorinated Compounds by High Performance Liquid Chromatography/Tandem Mas Spectrometry (HPLC/MS/MS)*	Accuracy/Bias/Sensitivity-Contamination	No target compound >QL[b]	MB/Instrument Blank	S&A
		Accuracy/Bias/Sensitivity-Contamination	No target compound >QL[c]	Equipment Rinsate Blanks	S&A
		Accuracy/Bias	Laboratory Specified	Labeled compounds	A
		Accuracy/Bias	50%-150% (Soil), 70%-130% (Water)	LCS	A
		Precision	RPD ≤50% (Soil), RPD ≤30% (Water)	MS/MSD	A
		Completeness	≥90%	Data Completeness Check	A

[1]Reference number from QAPP Worksheet #21.
[2]Reference number from QAPP Worksheet #23.

a Refer to Worksheet #15 for a complete list of analytes for each analytical group.
b If MB exceedances are widespread or reoccurring, analyses must stop and the source of contamination must be eliminated or reduced.
c Equipment blank contamination will be evaluated on an individual basis.

QAPP Worksheet #13: Secondary Data Criteria and Limitations Table

Any data needed for project implementation or decision making that are obtained from non-direct measurement sources such as computer databases, background information, technologies and methods, environmental indicator data, publications, photographs, topographical maps, literature files and historical data bases will be compared to the DQOs for the project to determine the acceptability of the data. Thus, for example, analytical data from historical surveys will be evaluated to determine whether they satisfy the validation criteria for the project and to determine whether sufficient data was provided to allow an appropriate validation to be done. If not, then a decision to conduct additional sampling for the site may be necessary.

Secondary Data	Data Source (Originating Organization, Report Title, and Date)	Data Generator(s) (Originating Org., Data Types, Data Generation/ Collection Dates)	How Data May Be Used (if deemed usable during data assessment stage)	Limitations on Data Use
SGPP facility background information and NYSDOH drinking water data	NYSDEC, NYSDOH, SGPP	Site history and previous investigations	To evaluate potential releases	Qualitative use

QAPP Worksheet #14: Summary of Project Tasks

Sampling Tasks:

This phase of the project consists of monitoring well installation and sampling, direct-push soil sampling, wastewater sampling, and potable well sampling. Eighteen (including two environmental duplicate samples) ground water samples will be collected from the seven EPA monitoring wells to be installed in the vicinity of SGPP; the seven existing monitoring wells installed on SGPP property; the USGS observation well located north of the site on the west bank of the Hoosic River; and a village test well located adjacent to the PSWs. Eight (including one environmental duplicate sample) potable well samples will be collected from the three PSWs and up to four background locations.

Monitoring wells will be installed and developed according to EPA ERT SOPs 2048—Monitor Well Installation and 2044—Monitor Well Development. Ground water samples from the on-site and EPA monitoring wells, and the USGS observation well, will be collected according to EPA Region 2 SOPs for Field Activities, Section 6—Ground Water Sampling. The ground water sample from the village test well will be collected according to EPA Region 2 SOPs for Field Activities, Section 7—Sampling of Potable Water Supplies. EPA, SGPP, and USGS monitoring well locations are depicted on Figures 1 and 2.

Four (including one environmental duplicate sample) potable well samples will be collected from the three active municipal wells (Well Nos. 3, 6, and 7). Up to four background drinking water samples will be collected from locations to be determined in the field. Region 2 SAT will collect raw ground water samples (i.e., prior to water treatment) directly into sample containers from sampling spigots as close as possible to the wellhead, according to EPA Region 2 for Field Activities, Section 7 – Sampling of Potable Water Supplies. Potable well sample locations are depicted on Figure 1.

Up to 72 (including four environmental duplicate samples) soil samples will be collected using direct-push technology from 15 boreholes advanced throughout the SGPP property. Three of the borings will be advanced on the hillside believed to be where smokestack filters were rinsed on the ground surface. The remaining 12 boreholes will be advanced to characterize the soil on all sides of the facility, including in the vicinity of a historical stormwater pipe. Soil samples will be collected every 5 feet, beginning with the 0- to 2-foot interval (i.e., 0′–2′, 5′–7′, 10′–12′, etc.), down to the water table. Soil samples will be collected according to EPA Region 2 SOPs for Field Activities, Section 14—Soil Sampling and according to ASTM D 6418-04: Standard Practice for Using the Disposable En Core Sampler for Sampling and Storing Soil for Volatile Organic Analysis. Direct-push borehole locations are shown on Figure 2.

Soil samples will be obtained using direct-push technology. Soil borings will be advanced to the top of the water table; depth to water at the site varies and was observed to range from approximately 20 to 30 feet on northern, uphill portions of the property to approximately 11 to 12 feet on southern, downhill portions of the property during the summer months. VOC soil sample fractions will be collected with dedicated En Core sampling devices. Other soil sample fractions will be homogenized in stainless steel (not aluminum) pans, which will be decontaminated after each use, with dedicated HDPE scoops prior to insertion into the appropriate sample containers. In order to minimize PFC cross-contamination, the PFC soil

sample fraction will be collected first after homogenization, prior to opening any of the other collection jars.

Up to four wastewater samples will be collected: one from SGPP facility sanitary Manhole #1, two from stormwater manholes located on the northwest and southeast sides of the facility, and one sample from the sewage ejector pit. Wastewater samples will be collected according to EPA Region 4 SESD Wastewater Sampling SOP. Wastewater sample locations are depicted on Figure 2.

Region 2 SAT will collect rinsate blanks to demonstrate that non-dedicated sampling equipment (e.g., direct-push cutting shoe, submersible pump) are free of contamination. The water utilized for the final step of decontamination of non-dedicated sampling equipment will also be sampled to demonstrate that it is free of contamination, due to the ubiquity of PFCs in plastics. In order to minimize the possibility of introducing PFOA contamination into samples, the following products will be forbidden on site: products known to contain fluoropolymers, aluminum foil, chemical (blue) ice, pre-wrapped food or snacks, cosmetics, moisturizers, water-resistant or waterproof outerwear, Post-it-Notes and waterproof logbooks, and other materials outlined in Attachment 3. Collection of locational data using GPS technology and photo documentation of the sampling and other site activities will also be performed. All samples will be analyzed by off-site laboratories for Organic TAL VOCs, SVOCs, and Aroclors; Inorganic TAL (including Hg) parameters; and PFCs. The soil and samples will also be analyzed for TOC, grain size distribution, pH, and conductivity by off-site laboratories. The pH and conductivity of the ground water samples will be determined in the field using a calibrated water quality meter. The sampling effort is tentatively scheduled to begin the week of April 4, 2016.

Analysis Tasks:

The field and QA/QC samples collected by Region 2 SAT will be analyzed by CLP laboratories for Organic TAL VOCs, SVOCs, and Aroclors; and Inorganic TAL (including Hg) parameters. The Organic and Inorganic TAL analyses will be completed according to CLP SOWs SOM02.3 and ISM02.3, respectively. All samples collected by Region 2 SAT will be analyzed by a WESTON-subcontracted laboratory for PFCs.. The soil and samples will also be analyzed for TOC, grain size distribution, pH, and conductivity as detailed in Attachment 1. The PFC analysis will be completed according to the method SOP provided by the subcontracted laboratory. Region 2 SAT will request expedited TATs for CLP analytical results (i.e., 28 days from sample receipt at the laboratory). For PFC analytical results, Region 2 SAT will request TATs from end of sampling of 7 days for preliminary data, 14 days for final laboratory data packages, and 28 days for validated data.

Quality Control Tasks:

The soil and aqueous samples will be collected for definitive data QA objective. Field duplicate samples will be collected at a rate of one per twenty samples or one per batch of less than twenty samples. For Organic TAL Arolors, Inorganic TAL (including mercury) and PFC analyses, one sample per 20 samples per matrix (or one sample per batch of less than 20 samples per matrix) will be designated for Matrix Spike/Matrix Spike Duplicate (MS/MSD) analysis. EPA CLP SOWs do not require MS/MSD samples for Organic TAL VOCs and SVOCs. One rinsate blank

per equipment type per day will be collected to ensure adequate decontamination of non-dedicated sampling equipment.

Data Management Tasks:

Activities under this project will be reported in status and trip reports and other deliverables (e.g., analytical reports, final reports) described herein. Activities will also be summarized in appropriate format for inclusion in monthly and annual reports. The following deliverables will be provided under this project:

Sampling Trip Reports: A sampling trip report will be prepared for each site to provide a detailed accounting of what occurred during each sampling mobilization. The sampling trip reports will be prepared within two weeks of the last day of each sampling mobilization. Information will be provided on time of major events, dates, and personnel on site (including affiliations). Submittal dates to be determined.

Maps/Figures: Maps depicting site layouts and sample locations will be included in the sampling trip reports, as appropriate.

HRS Documentation Record: If the results indicate that the site is eligible for inclusion on the NPL, an HRS Documentation Record will be prepared for the site with samples analyzed under this plan. Region 2 SAT will provide the report to the EPA PRS by a submitted date to be determined after receiving validated data. The HRS Documentation Record will be used to support the inclusion of the site on the NPL.

Documentation and Records:

All sample documents will be completed legibly, in ink. Any corrections or revisions will be made by lining through the incorrect entry and by initialing the error.

Field Logbook: The field logbook is essentially a descriptive notebook detailing site activities and observations so that an accurate account of field procedures can be reconstructed in the writer's absence. Field logbook will be bound and paginated. **To minimize possible contamination of the samples by PFCs, the field logbook will not be waterproof or treated with waterproof materials.** All entries will be dated and signed by the individuals making the entries, and should include (at a minimum) the following:

1. Site name and project number
2. Name(s) of personnel on site
3. Dates and times of all entries (military time preferred)
4. Descriptions of all site activities, site entry, and exit times
5. Noteworthy events and discussions
6. Weather conditions
7. Site observations
8. Sample and sample location identification and description*
9. Subcontractor information and names of on-site personnel
10. Date and time of sample collections, along with COC information
11. Record of photographs

12. Site sketches

* The description of the sample location will be noted in such a manner as to allow the reader to reproduce the location in the field at a later date.

Sample Labels: Sample labels will clearly identify the particular sample, and should include the following:

1. Site/project number
2. Sample identification number
3. Sample collection date and time
4. Designation of sample (grab or composite)
5. Sample preservation
6. Analytical parameters
7. Name of sampler

Sample labels will be written in indelible ink and securely affixed to the sample container. Tie-on labels can be used if properly secured.

Custody Seals: Custody seals demonstrate that a sample container has not been tampered with or opened. The individual in possession of the sample(s) will sign and date the seal, affixing it in such a manner that the container cannot be opened without breaking the seal. The name of this individual, along with a description of the sample packaging, will be noted in the field logbook.

Assessment/Audit Tasks: No performance audit of field operations is anticipated at this time. If conducted, performance and system audit will be in accordance with the project plan.

Data Review Tasks: All data will be validated by EPA or subcontract data validators. Laboratory analytical results will be assessed by the data reviewers for compliance with required precision, accuracy, completeness, representativeness, and sensitivity criteria.

ED_001670_00012770-00037

QAPP Worksheet #15: Reference Limits and Evaluation Table – VOCs

Analyte	CAS Number	Contract Required Quantitation Limits (CRQL) *				Project Action Limits**
		Trace Water	Low Water	Low Soil	Medium Soil	
		µg/L	µg/L	µg/kg	µg/kg	
Dichlorodifluoromethane	75-71-8	0.50	5.0	5.0	250	≥ 3 times maximum background concentration (or ≥ adjusted CRQL if background is non-detect), and attributable to site
Chloromethane	74-87-3	0.50	5.0	5.0	250	
Vinyl chloride	75-01-4	0.50	5.0	5.0	250	
Bromomethane	74-83-9	0.50	5.0	5.0	250	
Chloroethane	75-00-3	0.50	5.0	5.0	250	
Trichlorofluoromethane	75-69-4	0.50	5.0	5.0	250	
1,1-Dichloroethene	75-35-4	0.50	5.0	5.0	250	
1,1,2-Trichloro-1,2,2-trifluoroethane	76-13-1	0.50	5.0	5.0	250	
Acetone	67-64-1	5.0	10	10	500	
Carbon disulfide	75-15-0	0.50	5.0	5.0	250	
Methyl acetate	79-20-9	0.50	5.0	5.0	250	
Methylene chloride	75-09-2	0.50	5.0	5.0	250	
trans-1,2-Dichloroethene	156-60-5	0.50	5.0	5.0	250	
Methyl tert-butyl ether	1634-04-4	0.50	5.0	5.0	250	
1,1-Dichloroethane	75-34-3	0.50	5.0	5.0	250	
cis-1,2-Dichloroethene	156-59-2	0.50	5.0	5.0	250	
2-Butanone	78-93-3	5.0	10	10	500	
Bromochloromethane	74-97-5	0.50	5.0	5.0	250	
Chloroform	67-66-3	0.50	5.0	5.0	250	
1,1,1-Trichloroethane	71-55-6	0.50	5.0	5.0	250	
Cyclohexane	110-82-7	0.50	5.0	5.0	250	
Carbon tetrachloride	56-23-5	0.50	5.0	5.0	250	
Benzene	71-43-2	0.50	5.0	5.0	250	
1,2-Dichloroethane	107-06-2	0.50	5.0	5.0	250	
Trichloroethene	79-01-6	0.50	5.0	5.0	250	
Methylcyclohexane	108-87-2	0.50	5.0	5.0	250	
1,2-Dichloropropane	78-87-5	0.50	5.0	5.0	250	
Bromodichloromethane	75-27-4	0.50	5.0	5.0	250	
cis-1,3-Dichloropropene	10061-01-5	0.50	5.0	5.0	250	
4-Methyl-2-pentanone	108-10-1	5.0	10	10	500	
Toluene	108-88-3	0.50	5.0	5.0	250	
trans-1,3-Dichloropropene	10061-02-6	0.50	5.0	5.0	250	
1,1,2-Trichloroethane	79-00-5	0.50	5.0	5.0	250	
Tetrachloroethene	127-18-4	0.50	5.0	5.0	250	
2-Hexanone	591-78-6	5.0	10	10	500	
Dibromochloromethane	124-48-1	0.50	5.0	5.0	250	
1,2-Dibromoethane	106-93-4	0.50	5.0	5.0	250	
Chlorobenzene	108-90-7	0.50	5.0	5.0	250	
Ethylbenzene	100-41-4	0.50	5.0	5.0	250	
o-Xylene	95-47-6	0.50	5.0	5.0	250	
m,p-Xylene	179601-23-1	0.50	5.0	5.0	250	
Styrene	100-42-5	0.50	5.0	5.0	250	
Bromoform	75-25-2	0.50	5.0	5.0	250	
Isopropylbenzene	98-82-8	0.50	5.0	5.0	250	
1,1,2,2-Tetrachloroethane	79-34-5	0.50	5.0	5.0	250	
1,3-Dichlorobenzene	541-73-1	0.50	5.0	5.0	250	
1,4-Dichlorobenzene	106-46-7	0.50	5.0	5.0	250	
1,2-Dichlorobenzene	95-50-1	0.50	5.0	5.0	250	
1,2-Dibromo-3-chloropropane	96-12-8	0.50	5.0	5.0	250	
1,2,4-Trichlorobenzene	120-82-1	0.50	5.0	5.0	250	
1,2,3-Trichlorobenzene	87-61-6	0.50	5.0	5.0	250	

*From EPA CLP SOW SOM02.3, August 2014.
** Results will also be compared to EPA RMLs and HRS benchmarks including MCLs, see below

QAPP Worksheet #15: Reference Limits and Evaluation Table – SVOCs

Analyte	CAS Number	Contract Required Quantitation Limits (CRQL) *			Project Action Limits**
		Low Water	Low Soil/Sed	Medium Soil/Sed	
		µg/L	µg/kg	µg/kg	
1,4-Dioxane	123-91-1	2.0	67	2,000	≥ 3 times maximum background concentration (or ≥ adjusted CRQL if background is non-detect), and attributable to site
Benzaldehyde	100-52-7	10	330	10,000	
Phenol	108-95-2	10	330	10,000	
Bis(2-chloroethyl)ether	111-44-4	10	330	10,000	
2-Chlorophenol	95-57-8	5.0	170	5,000	
2-Methylphenol	95-48-7	10	330	10,000	
2,2'-Oxybis(1-chloropropane)	108-60-1	10	330	10,000	
Acetophenone	98-86-2	10	330	10,000	
4-Methylphenol	106-44-5	10	330	10,000	
N-Nitroso-di-n-propylamine	621-64-7	5.0	170	5,000	
Hexachloroethane	67-72-1	5.0	170	5,000	
Nitrobenzene	98-95-3	5.0	170	5,000	
Isophorone	78-59-1	5.0	170	5,000	
2-Nitrophenol	88-75-5	5.0	170	5,000	
2,4-Dimethylphenol	105-67-9	5.0	170	5,000	
Bis(2-chloroethoxy)methane	111-91-1	5.0	170	5,000	
2,4-Dichlorophenol	120-83-2	5.0	170	5,000	
Naphthalene	91-20-3	5.0	170	5,000	
4-Chloroaniline	106-47-8	10	330	10,000	
Hexachlorobutadiene	87-68-3	5.0	170	5,000	
Caprolactam	105-60-2	10	330	10,000	
4-Chloro-3-methylphenol	59-50-7	5.0	170	5,000	
2-Methylnaphthalene	91-57-6	5.0	170	5,000	
Hexachlorocyclopentadiene	77-47-4	10	330	10,000	
2,4,6-Trichlorophenol	88-06-2	5.0	170	5,000	
2,4,5-Trichlorophenol	95-95-4	5.0	170	5,000	
1,1'-Biphenyl	92-52-4	5.0	170	5,000	
2-Chloronaphthalene	91-58-7	5.0	170	5,000	
2-Nitroaniline	88-74-4	5.0	170	5,000	
Dimethylphthalate	131-11-3	5.0	170	5,000	
2,6-Dinitrotoluene	606-20-2	5.0	170	5,000	
Acenaphthylene	208-96-8	5.0	170	5,000	
3-Nitroaniline	99-09-2	10	330	10,000	
Acenaphthene	83-32-9	5.0	170	5,000	

*From EPA CLP SOW SOM02.3, August 2014.
** Results will also be compared to EPA RMLs and HRS benchmarks including MCLs.
EPA RMLs are available at: https://www.epa.gov/risk/regional-removal-management-levels-chemicals-rmls
HRS benchmarks are available at: https://www.epa.gov/superfund/superfund-chemical-data-matrix-scdm-query

QAPP Worksheet #15: Reference Limits and Evaluation Table – SVOCs (concluded)

Analyte	CAS Number	Contract Required Quantitation Limits (CRQL) *			Project Action Limits**
		Low Water	Low Soil/Sed	Medium Soil/Sed	
		µg/L	µg/kg	µg/kg	
2,4-Dinitrophenol	51-28-5	10	330	10,000	≥ 3 times maximum background concentration (or ≥ adjusted CRQL if background is non-detect), and attributable to site
4-Nitrophenol	100-02-7	10	330	10,000	
Dibenzofuran	132-64-9	5.0	170	5,000	
2,4-Dinitrotoluene	121-14-2	5.0	170	5,000	
Diethylphthalate	84-66-2	5.0	170	5,000	
Fluorene	86-73-7	5.0	170	5,000	
4-Chlorophenyl-phenylether	7005-72-3	5.0	170	5,000	
4-Nitroaniline	100-01-6	10	330	10,000	
4,6-Dinitro-2-methylphenol	534-52-1	10	330	10,000	
N-Nitrosodiphenylamine[1]	86-30-6	5.0	170	5,000	
1,2,4,5-Tetrachlorobenzene	95-94-3	5.0	170	5,000	
4-Bromophenyl-phenylether	101-55-3	5.0	170	5,000	
Hexachlorobenzene	118-74-1	5.0	170	5,000	
Atrazine	1912-24-9	10	330	10,000	
Pentachlorophenol	87-86-5	10	330	10,000	
Phenanthrene	85-01-8	5.0	170	5,000	
Anthracene	120-12-7	5.0	170	5,000	
Carbazole	86-74-8	10	330	10,000	
Di-n-butylphthalate	84-74-2	5.0	170	5,000	
Fluoranthene	206-44-0	10	330	10,000	
Pyrene	129-00-0	5.0	170	5,000	
Butylbenzylphthalate	85-68-7	5.0	170	5,000	
3,3'-Dichlorobenzidine	91-94-1	10	330	10,000	
Benzo(a)anthracene	56-55-3	5.0	170	5,000	
Chrysene	218-01-9	5.0	170	5,000	
Bis(2-ethylhexyl)phthalate	117-81-7	5.0	170	5,000	
Di-n-octylphthalate	117-84-0	10	330	10,000	
Benzo(b)fluoranthene	205-99-2	5.0	170	5,000	
Benzo(k)fluoranthene	207-08-9	5.0	170	5,000	
Benzo(a)pyrene	50-32-8	5.0	170	5,000	
Indeno(1,2,3-cd)pyrene	193-39-5	5.0	170	5,000	
Dibenzo(a,h)anthracene	53-70-3	5.0	170	5,000	
Benzo(g,h,i)perylene	191-24-2	5.0	170	5,000	
2,3,4,6-Tetrachlorophenol	58-90-2	5.0	170	5,000	

*From EPA CLP SOW SOM02.3, August 2014.
** Results will also be compared to EPA RMLs and HRS benchmarks including MCLs.
EPA RMLs are available at: https://www.epa.gov/risk/regional-removal-management-levels-chemicals-rmls
HRS benchmarks are available at: https://www.epa.gov/superfund/superfund-chemical-data-matrix-scdm-query

QAPP Worksheet #15: Reference Limits and Evaluation Table – Aroclors

Analyte	CAS Number	Contract Required Quantitation Limits (CRQL) *		Project Action Limits**
		Water	Soil	
		µg/L	µg/kg	
Aroclor-1016	12674-11-2	1.0	33	≥ 3 times maximum background concentration (or ≥ adjusted CRQL if background is non-detect), and attributable to site
Aroclor-1221	11104-28-2	1.0	33	
Aroclor-1232	11141-16-5	1.0	33	
Aroclor-1242	53469-21-9	1.0	33	
Aroclor-1248	12672-29-6	1.0	33	
Aroclor-1254	11097-69-1	1.0	33	
Aroclor-1260	11096-82-5	1.0	33	
Aroclor-1262	37324-23-5	1.0	33	
Aroclor-1268	11100-14-4	1.0	33	

*From EPA CLP SOW SOM02.3, August 2014.
** Results will also be compared to EPA RMLs and HRS benchmarks including MCLs.
EPA RMLs are available at: https://www.epa.gov/risk/regional-removal-management-levels-chemicals-rmls
HRS benchmarks are available at: https://www.epa.gov/superfund/superfund-chemical-data-matrix-scdm-query

QAPP Worksheet # 15: Reference Limits and Evaluation Table – Inorganics

Analyte	CAS Number	Contract Required Quantitation Limits (CRQL) *		Project Action Limits**
		Water	Soil	
		µg/L	mg/kg	
Aluminum	7429-90-5	200	20	≥ 3 times maximum background concentration (or ≥ adjusted CRQL if background is non-detect), and attributable to site
Antimony	7440-36-0	60	6	
Arsenic	7440-38-2	10	1	
Barium	7440-39-3	200	20	
Beryllium	7440-41-7	5	0.5	
Cadmium	7440-43-9	5	0.5	
Calcium	7440-70-2	5,000	500	
Chromium	7440-47-3	10	1	
Cobalt	7440-48-4	50	5	
Copper	7440-50-8	25	2.5	
Iron	7439-89-6	100	10	
Lead	7439-92-1	10	1	
Magnesium	7439-95-4	5,000	500	
Manganese	7439-96-5	15	15	
Nickel	7440-02-0	40	40	
Potassium	7440-09-7	5,000	5,000	
Selenium	7782-49-2	35	35	
Silver	7440-22-4	10	10	
Sodium	7440-23-5	5,000	5,000	
Thallium	7440-28-0	25	25	
Vanadium	7440-62-2	50	50	
Zinc	7440-66-6	60	60	
Mercury	7439-97-6	0.2	0.1	

*From EPA CLP SOW ISM02.3, August 2014.
** Results will also be compared to EPA RMLs and HRS benchmarks including MCLs.
EPA RMLs are available at: https://www.epa.gov/risk/regional-removal-management-levels-chemicals-rmls
HRS benchmarks are available at: https://www.epa.gov/superfund/superfund-chemical-data-matrix-scdm-query

QAPP Worksheet #15: Reference Limits and Evaluation Table – Perfluorinated Compounds (PFCs)

Analyte	CAS Number	Soil Analytical Method – Quantitation Limits (µg/kg)	Aqueous Analytical Method – Quantitation Limits (ng/L)	EPA Provisional Health Advisory for Drinking Water (ng/L)	Other Project Action Limits
Perfluoropentanoic acid (PFPeA)	2706-90-3	1	5	Not Established	≥ 3 times maximum background concentration (or ≥ adjusted CRQL if background is non-detect), and attributable to site
Perfluorohexanoic acid (PFHxA)	307-24-4	1	5	Not Established	
Perfluoroheptanoic acid (PFHpA)	375-85-9	1	5	Not Established	
Perfluorooctanoic Acid (PFOA)	335-67-1	1	5	400	
Perfluorononanoic acid (PFNA)	375-95-1	1	5	Not Established	
Perfluorodecanoic acid (PFDA)	335-76-2	1	5	Not Established	
Perfluoroundecanoic acid (PFUnA)	2058-94-8	1	5	Not Established	
Perfluorododecanoic acid (PFDoA)	307-55-1	1	5	Not Established	
Perfluorobutanesulfonic acid (PFBS)	375-73-5	1	5	Not Established	
Perfluorohexanesulfonic acid (PFHxS)	335-46-4	1	5	Not Established	
Perfluorooctanesulfonic acid (PFOS)	1763-23-1	1	5	200	
Perfluorodecanesulfonic acid (PFDS)	CASID30783	1	5	Not Established	

µg/kg = micrograms per kilogram
ng/L = nanograms per liter

QAPP Worksheet #16: Project Schedule/Timeline Table

Activities	Organization	Dates		Deliverable	Deliverable Due Date
		Anticipated Date(s) of Initiation	Anticipated Date of Completion		
Preparation of QAPP	Region 2 SAT	March 2016	March 2016	QAPP	March 2016
Review of QAPP	EPA Region 2 PRS	March 2016	Prior to sampling date	Approved QAPP	TBD
Preparation of HASP	Region 2 SAT	Prior to sampling date	TBD	HASP	TBD
Procurement of Field Equipment	Region 2 SAT	Prior to sampling date	TBD	N/A	N/A
Laboratory Request	Region 2 SAT	Prior to sampling date	TBD	Analytical Services Request Forms	March 2016
Field Reconnaissance/Access	Region 2 SAT and EPA Region 2	February 2016	March 2016	N/A	N/A
Collection of Field Samples	Region 2 SAT	April 2016	May 2016	N/A	N/A
Sample Analyses	CLP and Subcontract Laboratories	Upon receipt of samples	14 days from last sample receipt date	Preliminary Laboratory Analytical Results	TBD
Sampling Trip Reporting	Region 2 SAT	Upon completion of sampling task	One week after completion of sampling task	Interim Sampling Trip Reports	TBD
Submittal of Analytical Results	CLP and Subcontract Laboratories	Upon completion of analysis	14 days from last sample receipt date	Laboratory Data Package	TBD
Validation of Laboratory Results	Region 2 ESAT and WESTON subcontract personnel	Upon receipt of laboratory package	28 days from last sample receipt date	Validation Report (ESAT and SAT)	TBD
Submittal Report with Validated Data	Region 2 SAT	TBD	TBD	HRS Documentation Record Package	TBD

TBD – To Be Determined

QAPP Worksheet #17: Sampling Design and Rationale

This phase of the project consists of monitoring well installation and sampling, direct-push soil sampling, wastewater sampling, and potable well sampling. Eighteen (including two environmental duplicate samples) ground water samples will be collected from the seven EPA monitoring wells to be installed in the vicinity of SGPP; the seven existing monitoring wells installed on SGPP property; the USGS observation well located north of the site on the west bank of the Hoosic River; and a village test well located adjacent to the PSWs. Eight (including one environmental duplicate sample) potable well samples will be collected from the three PSWs and up to four background locations.

Monitoring wells will be installed and developed according to EPA ERT SOPs 2048—Monitor Well Installation and 2044—Monitor Well Development. The monitoring wells will be screened at similar elevations as the PSWs. The locations of the seven monitoring wells were selected to characterize ground water in the vicinity of the SGPP facility; to characterize ground water between the SGPP facility and the PSWs in order to establish a link between a release at the facility and the contamination in the PSWs; and to characterize background conditions. Ground water samples from the on-site and EPA monitoring wells, and the USGS observation well, will be collected according to EPA Region 2 SOPs for Field Activities, Section 6—Ground Water Sampling. The ground water sample from the village test well will be collected according to EPA Region 2 SOPs for Field Activities, Section 7—Sampling of Potable Water Supplies. EPA, SGPP, and USGS monitoring well locations are depicted on Figures 1 and 2.

Four (including one environmental duplicate sample) potable well samples will be collected from the three active municipal wells (Well Nos. 3, 6, and 7). Up to four background drinking water samples will be collected from locations to be determined during a pre-sampling reconnaissance. Region 2 SAT will collect raw ground water samples (i.e., prior to water treatment) directly into sample containers from sampling spigots as close as possible to the wellhead, according to EPA Region 2 for Field Activities, Section 7 – Sampling of Potable Water Supplies. Potable well sample locations are depicted on Figure 1.

Up to 72 (including four environmental duplicate samples) soil samples will be collected using direct-push technology from 15 boreholes advanced throughout the SGPP property. Three of the borings will be advanced on the hillside believed to be where smokestack filters were rinsed on the ground surface. The remaining 12 boreholes will be advanced to characterize the soil on all sides of the facility, including in the vicinity of a historical storm water pipe. Soil samples will be collected every 5 feet, beginning with the 0- to 2-foot interval (i.e., 0′–2′, 5′–7′, 10′–12′, etc.), down to the water table. Soil samples will be collected according to EPA Region 2 SOPs for Field Activities, Section 14—Soil Sampling and according to ASTM D 6418-04: Standard Practice for Using the Disposable En Core Sampler for Sampling and Storing Soil for Volatile Organic Analysis. Geoprobe borehole locations are shown on Figure 2.

Soil samples will be obtained using direct-push technology. Soil borings will be advanced to the top of the water table; depth to water at the site varies and was observed to range from approximately 20 to 30 feet on northern, uphill portions of the property to approximately 11 to 12 feet on southern, downhill portions of the property during the summer months. VOC soil

sample fractions will be collected with dedicated En Core sampling devices. Other soil sample fractions will be homogenized in stainless steel (not aluminum) pans, which will be decontaminated after each use, with dedicated HDPE scoops prior to insertion into the appropriate sample containers. In order to minimize PFC cross-contamination, the PFC soil sample fraction will be collected first after homogenization, prior to opening any of the other collection jars.

Up to four wastewater samples will be collected. One from SGPP facility sanitary Manhole #1, two from storm water manholes located on the northwest and southeast sides of the facility, and one sample from the sewage ejector pit. Wastewater samples will be collected according to EPA Region 4 SESD Wastewater Sampling SOP. Wastewater sample locations are depicted on Figure 2.

Region 2 SAT will collect rinsate blanks to demonstrate that non-dedicated sampling equipment (e.g., direct-push cutting shoe, submersible pump) are free of contamination. The water utilized for the final step of decontamination of non-dedicated sampling equipment will also be sampled to demonstrate that it is free of contamination, due to the ubiquity of PFCs in plastics. In order to minimize the possibility of introducing PFOA contamination into samples, the following products will be forbidden on site: products known to contain fluoropolymers, aluminum foil, chemical (blue) ice, pre-wrapped food or snacks, cosmetics, moisturizers, water-resistant or waterproof outerwear, Post-it-Notes and waterproof logbooks, and other materials outlined in Attachment 3. Collection of locational data using Global Positioning System (GPS) technology and photo documentation of the sampling and other site activities will also be performed. The monitoring wells will be surveyed by a New York State-licensed surveyor. All samples will be analyzed by off-site laboratories for Organic TAL VOCs, SVOCs, and Aroclors; Inorganic TAL (including Hg) parameters; and PFCs. The soil samples will also be analyzed by off-site laboratories for TOC, grain size distribution, pH, and conductivity. The pH and conductivity of the ground water samples will determined in the field using a calibrated water quality meter. The sampling effort is tentatively scheduled to begin the week of April 4, 2016.

All non-dedicated equipment used during field-sampling activities will be decontaminated prior to and subsequent to sampling. Decontamination will be carried out over a container for temporary collection of spent fluids, which will then be containerized for analysis and off-site disposal. Potable water for gross decontamination will be obtained by Region 2 SAT and its drilling subcontractor. Final rinse will be performed using distilled/deionized PFC-free water obtained by Region 2 SAT from a chemical laboratory supply company. Decontamination of sampling equipment will be conducted as follows:

1. Alconox detergent and tap water scrub to remove visual contamination;
2. Potable water rinse
3. Steam clean with tap water
4. Rinse with Nitric Acid
5. Distilled/deionized/"PFC-free" rinse
6. Air dry; and
7. Place on silicone sheet, wrap in silicone lined sheeting as necessary for transport

The samples will be collected for a definitive data QA objective. Field duplicate and MS/MSD samples will be collected at a rate of one per twenty samples per matrix per site or one per batch of less than twenty samples. Region 2 SAT will request expedited TATs for CLP ground water analytical results (i.e., 28 days from sample receipt at the laboratory) and standard TATs for CLP soil analytical results (i.e., 42 days from sample receipt at the laboratory). The expedited TAT for the ground water analytical data is required to meet HRS Documentation Record Package submittal deadlines. For PFC analytical results, Region 2 SAT will request TATs from end of sampling of 7 days for preliminary data, 14 days for final laboratory data packages, and 28 days for validated data. PFOA and PFOS analytical results will be compared to background results, EPA Provisional Health Advisories and HRS benchmarks. See Worksheet #14 for a description of QA/QC samples. The following laboratories will provide the analyses indicated:

Lab Name/Location	Sample Type	Parameters
CLP Lab TBD	Soil/Aqueous and QA/QC samples	Organic TAL VOCs, SVOCs, Aroclors, and Inorganic TAL (including mercury)
ALS Environmental 1317 13th Ave S, Kelso WA 98626 (360) 577-7222	Soil/Aqueous and QA/QC samples	PFCs and Specific Conductance
EPA Region 2 DESA Laboratory	Soil	TOC, Grainsize, and pH

QAPP Worksheet #18: Sampling Locations and Methods/SOP Requirements Table

Matrix	Sampling Location(s)	Units	Analytical Group(s)	Concentration Level	No. of Samples (identify field duplicates)	Sampling SOP Reference	Rationale for Sampling Location
Aqueous (Ground Water and Wastewater)	See Attachment 1, Figures 1 and 2	µg/L	Organic TAL VOCs, SVOCs, and Aroclors	Low/Medium	22 (2)	EPA Region 2 SOPs for Field Activities: Sections 6, and 7 Attachment 3: Field Sampling Protocols to Avoid Cross-Contamination at Perfluorinated Chemical (PFC)Sites	Determine contaminants and possible releases
		µg/L	Inorganic TAL (including Hg)				
		µg /L	PFCs				
Aqueous (Potable Water)	See Attachment 1, Figures 1 and 2	µg/L	Organic TAL VOCs, SVOCs, and Aroclors	Trace and Low/Medium	8 (1)	EPA Region 2 SOPs for Field Activities: Section 7 Attachment 3: Field Sampling Protocols to Avoid Cross-Contamination at Perfluorinated Chemical (PFC)Sites	
		µg/L	Inorganic TAL (including Hg)				
		µg /L	PFCs				
Soil	See Attachment 1, Figure 3	µg/kg	Organic TAL VOCs, SVOCs, and Aroclors	Low/Medium	72 (4)	EPA Region 2 SOPs for Field Activities: Section 14 ASTM D6418-04* Attachment 3: Field Sampling Protocols to Avoid Cross-Contamination at Perfluorinated Chemical (PFC)Sites	
		mg/kg	Inorganic TAL (including Hg)				
		µg/kg	PFCs				

EPA – U.S. Environmental Protection Agency; SOP – Standard Operating Procedure; SVOC – Semivolatile Organic Compound; TAL – Target Analyte List
VOC – Volatile Organic Compound; PFC – Perfluorinated Compound
* Standard Practice for Using the Disposable En Core Sampler for Sampling and Storing Soil for Volatile Organic Analysis

QAPP Worksheet #19: Analytical SOP Requirements Table

Matrix	No. of Samples	Analytical Group [Lab Assignment]	Concentration Level	Analytical and Preparation Method/SOP Reference	Total Sample Volume	Containers (number, size, and type)	Preservation Requirements	Maximum Holding Time (preparation/ analysis)
Soil	72	Organic TAL VOCs	Low/Medium	SOM02.3, CLP Sampler's Guide	15 g	Three 5-g En Core dedicated sampling devices	Cool to 4°C	48 hours to preserve; 7 days to analyze
		Organic TAL SVOCs	Low/Medium	SOM02.3, CLP Sampler's Guide	8 oz.	One 8-oz. glass jar	Cool to 4°C	14 days to extract; 40 days to analyze
		Organic TAL Aroclors	Low/Medium	SOM02.3, CLP Sampler's Guide	8 oz.	One 8-oz. glass jar	Cool to 4°C	14 days to extract; 40 days to analyze
		Inorganic TAL (including Hg)	Low/Medium	ISM02.3, CLP Sampler's Guide	8 oz.	One 8-oz. glass jar	Cool to 4°C	6 months to analyze (except Hg – 28 days)
		PFCs	Low	ALS SOP LCP-PFC	4 oz.	One 4-oz. HDPE jar	Cool to 4°C	14 days to extract; 40 days to analyze
	68	TOC	N/A	Lloyd Kahn Method	Fill to capacity	One 16-oz. glass jar	Cool to 4°C	28 days
	68	Grain Size	N/A	ASTM D422-63			None required	N/A
	68	pH	N/A	DESA C-24			Cool to 4°C	N/A
	68	Conductance	N/A	09-ASTM and 04-SPC	4 oz.	One 4-oz. glass jar	Cool to 4°C	28 days
Ground Water and Wastewater	30	Organic TAL VOCs	Trace and Low/Medium	SOM02.3, CLP Sampler's Guide	120 mL	Three 40-mL glass vials w/Teflon lined septum	HCl to pH<2; Cool to 4°C	14 days
		Organic TAL SVOCs	Low/Medium	SOM02.3, CLP Sampler's Guide	2,000 mL	Two 1-liter amber glass bottles w/Teflon lined cap	Cool to 4°C	7 days to extract; 40 days to analyze
		Organic TAL Aroclors	Low/Medium	SOM02.3, CLP Sampler's Guide	2,000 mL	Two 1-liter amber glass bottles w/Teflon lined cap	Cool to 4°C	7 days to extract; 40 days to analyze

QAPP Worksheet #19: Analytical SOP Requirements Table (continued)

Matrix	No. of Samples	Analytical Group [Lab Assignment]	Concentration Level	Analytical and Preparation Method/SOP Reference	Total Sample Volume	Containers (number, size, and type)	Preservation Requirements	Maximum Holding Time (preparation/ analysis)
Ground Water and Wastewater	30	Inorganic TAL (including Hg)	Low/Medium	ISM02.3, CLP Sampler's Guide	1,000 mL	One 1-liter poly bottle	HNO_3 to pH<2 Cool to 4°C	6 months to analyze (except Hg – 28 days)
		PFCs	Low	ALS SOP LCP-PFC	250 mL	One 250-mL HDPE bottle	Cool to 4°C	14 days

CLP – Contract Laboratory Program; HCl – Hydrochloric Acid; Hg – Mercury ; HNO_3 – Nitric Acid; SVOC – Semivolatile Organic Compound
TAL – Target Analyte List; VOC – Volatile Organic Compound; PFC – Perfluorinated Compound

QAPP Worksheet #20: Field Quality Control Sample Summary Table

Matrix	Analytical Group	Concentration Level	Analytical / Preparation SOP Reference	No. of Sampling Locations	No. of Field Duplicate Pairs	No. of Extra Volume MS/MSD Samples	No. of Rinsate Blanks[1]	No. of Trip Blanks	No. of PE Samples
Soil	Organic TAL VOCs	Low/Medium	SOM02.3	72	4	4	3	NR	NR
	Organic TAL SVOCs	Low/Medium	SOM02.3	72	4	4	3	NR	NR
	Organic TAL Aroclors	Low/Medium	SOM02.3	72	4	4	3	NR	NR
	Inorganic TAL (including mercury)	Low/Medium	ISM02.3	72	4	4	3	NR	NR
	PFCs	Low	TBD	72	4	4	3	NR	NR
	TOC	N/A	Lloyd Kahn Method	72	4	NR	NR	NR	NR
	Grain Size	N/A	ASTM D422	72	NR	NR	NR	NR	NR
Aqueous (Ground Water, and Wastewater)	Organic TAL VOCs	Low/Medium	SOM02.3	27	2	NR	7	8	NR
	Organic TAL SVOCs	Low/Medium	SOM02.3	27	2	NR	7	NR	NR
	Organic TAL Aroclors	Low/Medium	SOM02.3	27	2	2	7	NR	NR
	Inorganic TAL (including mercury)	Low/Medium	ISM02.3	27	2	2	7	NR	NR
	PFCs	Low	ALS SOP LC-PFC	27	2	2	7	NR	NR

[1] Only required if non-dedicated sampling equipment is used; NR – not required

QAPP Worksheet #20: Field Quality Control Sample Summary Table (continued)

Matrix	Analytical Group	Concentration Level	Analytical / Preparation SOP Reference	No. of Sampling Locations	No. of Field Duplicate Pairs	No. of Extra Volume MS/MSD Samples	No. of Rinsate Blanks[1]	No. of Trip Blanks	No. of PE Samples
Aqueous (Potable Water)	Organic TAL VOCs	Trace	SOM02.3	7	1	NR	NR	2	NR
	Organic TAL SVOCs	Low/Medium	SOM02.3	7	1	NR	NR	NR	NR
	Organic TAL Aroclors	Low/Medium	SOM02.3	7	1	1	NR	NR	NR
	Inorganic TAL (including mercury)	Low/Medium	ISM02.3	7	1	1	NR	NR	NR
	PFCs	Low	ALS SOP LC-PFC	7	1	1	NR	NR	NR

QAPP Worksheet #21: Project Sampling SOP References Table

Reference Number	Title, Revision Date and/or Number	Originating Organization	Equipment Type	Modified for Project Work? (Y/N)	Comments
N/A	EPA Region 2 SOPs for Field Activities: Sections* 6 – Ground Water Sampling 7 – Sampling of Potable Water Supplies 14 – Soil Sampling	EPA Region 2 DESA Monitoring & Assessment Branch	Direct-push sampling equipment, dedicated En Core sampling devices, submersible pump, HDPE plastic scoops, stainless-steel bowls, sample jars	Y	--
N/A	EPA Region 4 Science and Ecosystem Support Division (SESD), SOP No. SESDPROC-306-R3 – Wastewater Sampling*	EPA Region 4 SESD	Stainless-steel direct-dip sampler, sample jars	Y	
N/A	Field Sampling Protocols to Avoid Cross-Contamination at Perfluorinated Chemical (PFC) Sites	WESTON Region 2 SAT	Direct-push sampling equipment, HDPE plastic scoops, submersible pump, stainless-steel bowls, sample jars	Y	--

* Methods and materials modified to conform to PFC sampling protocols outlined in Field Sampling Protocols to Avoid Cross-Contamination at Perfluorinated Chemical (PFC) Sites. See Attachment 3 of this QAPP for a list of acceptable supplies and equipment

DESA – Division of Environmental Science and Assessment
EPA – U.S. Environmental Protection Agency
SAT – Site Assessment Team
SOP – Standard Operating Procedure

ED_001670_00012770-00053

QAPP Worksheet #22: Field Equipment Calibration, Maintenance, Testing, and Inspection Table

Field Equipment	Calibration Activity	Maintenance Activity	Testing/ Inspection Activity	Frequency	Acceptance Criteria	Corrective Action	Responsible Person	SOP Reference
Multi-RAE Plus PID	Calibrate with Zero air; span gas of 100 ppm Isobutylene	Check/ replace battery/ Clean tip or bulb if necessary	BumpTest	Prior to day's activities; anytime anomaly suspected	+/- 5 units	Replace battery, or Replace Unit	Equipment Vendor	Manufacturer's Instructions
Trimble® GeoXT™ handheld	N/A	Recharge daily	N/A	Prior to event and each night during event	Per mfr.'s instructions	Replace battery if charge doesn't hold	Region 2 SAT sampling team members	Manufacturer's Instructions
Personal Data Ram PDR-1000	Calibration annually by manufacturer	9-volt alkaline battery or rechargeable battery	Calibration performed by manufacturer	Annual	N/A	Replace battery or replace unit	Equipment vendor	N/A

PID – Photoionization Detector
SAT – Site Assessment Team

QAPP Worksheet #23: Analytical SOP References Table

Reference Number	Title, Revision Date, and/or Number	Definitive or Screening Data	Analytical Group	Instrument	Organization Performing Analysis	Modified for Project Work? (Y/N)
SOM02.3	EPA Contract Laboratory Program, Statement of Work for Organic Superfund Methods, Multi-Media, Multi-Concentration. August 2014	Definitive	Organic TAL VOCs	GC/MS	TBD	N
			Organic TAL SVOCs	GC/MS	TBD	N
			Organic TAL Aroclors	GC/ECD	TBD	N
ISM02.3	EPA Contract Laboratory Program, Statement of Work for Inorganic Superfund Methods, Multi-Media, Multi-Concentration. August 2014	Definitive	Inorganic TAL Metals (incl. Hg)	ICP-AES	TBD	N
			Mercury	CVAAS	TBD	N
LCP-PFC	ALS SOP *Perfluorinated Compounds by High Performance Liquid Chromatography/Tandem Mass Spectrometry* December 2015	Definitive	PFCs	LC-MS/MS	ALS	N
Lloyd Kahn Method	Determination of Total Organic Carbon in Sediment	Screening	TOC	GC	EPA Region 2 DESA Laboratory	N
ASTM D422-63	Standard Test Method for Particle-Size Analysis of Soils	Screening	Grain Size	Hydrometer	EPA Region 2 DESA Laboratory	N
DESA C-24	pH and Corrosivity	Screening	pH	pH Meter	EPA Region 2 DESA Laboratory	N

QAPP Worksheet #23: Analytical SOP References Table (continued)

Reference Number	Title, Revision Date, and/or Number	Definitive or Screening Data	Analytical Group	Instrument	Organization Performing Analysis	Modified for Project Work? (Y/N)
04-SPC	Specific Conductance, µMHOS at 25 °C	Screening	Specific Conductance	Conductivity Meter	ALS	N

CLP – Contract Laboratory Program; CVAAS – Cold Vapor Atomic Absorption Spectrometer
GC – Gas Chromatograph; GC/ECD – Gas Chromatograph/Electron Capture Detector; GC/MS – Gas Chromatograph/Mass Spectrometer;
ICP-AES – Inductively Coupled Plasma–atomic Emission Spectrometer; TAL – Target Analyte List; TOC – Total Organic Carbon
PFC – Perfluroinated Compound

ED_001670_00012770-00056

QAPP Worksheet #24: Analytical Instrument Calibration Table

Instrument	Calibration Procedure	Frequency of Calibration	Acceptance Criteria	Corrective Action (CA)	Person Responsible for CA	SOP Reference
GC/MS	See SOM02.3	Initial calibration: upon award of the contract, whenever the laboratory takes corrective action which may change or affect the initial calibration criteria (e.g., ion source cleaning or repair, column replacement, etc.), or if the continuing calibration acceptance criteria have not been met. Continuing calibration: Once every 12 hours	Initial calibration/ Continuing calibration: relative response factor (RRF) greater than or equal to minimum acceptable response factor listed in Table 5 of procedure; %RSD must be less than or equal to value listed in Table 5 of procedure.	Initial calibration: inspect system for problems (e.g., clean ion source, change the column, service the purge and trap device), correct problem, re-calibrate. Continuing calibration: inspect system, recalibrate the instrument, reanalyze samples.	Laboratory GC/MS Technician	SOM02.3
GC/ECD	See SOM02.3	Initial calibration: upon award of the contract, whenever major instrument maintenance or modification is performed or if the calibration verification technical acceptance criteria have not been met. Calibration verification: Once every 12 hours	Initial calibration/ Calibration verification: resolution between two adjacent peaks must be greater than or equal to 60.0 percent, single components must be greater than or equal to 90.0 percent resolved, RTs within the RT window, %D must be greater than or equal to -25 percent and less than or equal to 25 percent, %RSD must be less than or equal to 20.0 percent.	Initial calibration: inspect the system (e.g., change the column, bake out the detector, clean the injection port), correct problem, re-calibrate. Calibration verification: inspect system, recalibrate the instrument, reanalyze samples.	Laboratory GC/ECD Technician	SOM02.3
ICP-AES	See ISM02.3	Initial calibration: daily or once every 24 hours and each time the instrument is set up. Continuing calibration: beginning and end of run, and frequency of 10% or every 2 hours during an analysis run.	As per instrument manufacturer's recommended procedures, with at least 2 standards.	Inspect the system, correct problem, re-calibrate, re-analyze samples.	Laboratory ICP-AES Technician	ISM02.3
CVAAS	See ISM02.3	Initial calibration: daily or once every 24 hours and each time the instrument is set up. Continuing calibration: beginning and end of run, and at frequency not to exceed every 1 hour during an analysis run.	As per instrument manufacturer's recommended procedures, with at least 2 standards.	Inspect the system, correct problem, re-calibrate, re-analyze samples.	Laboratory CVAA Technician	ISM02.3

QAPP Worksheet #24: Analytical Instrument Calibration Table (continued)

Instrument	Calibration Procedure	Frequency of Calibration	Acceptance Criteria	Corrective Action (CA)	Person Responsible for CA	SOP Reference
LC-MS/MS	5-point ICAL for linear calibration	Prior to sample analysis	RSD for each analyte ≤20% or least square regression R ≥0.995, or COD ≥0.990.	Correct problem then repeat ICAL.	Lab Manager/Analyst or certified instrument technician	TBD
	Second source calibration verification	After ICAL	All analytes within ±30% of expected value.	Correct problem and verify second source standard; rerun second source verification. If fails, correct problem and repeat initial calibration.	Lab Manager/Analyst or certified instrument technician	
	RT window position for each analyte and surrogate	Once per ICAL	Position shall be set using the midpoint standard for the ICAL.	N/A	Lab Manager/Analyst or certified instrument technician	
	CCV	Daily, before sample analysis, unless ICAL performed same day and after every 12 hours	All analytes within ±30% of expected value (%D)	Correct problem and rerun CCV. Reanalyze all samples since last successful calibration verification.	Lab Manager/Analyst or certified instrument technician	
	IS	Each CCV and sample	RT ±60 seconds from RT of the most recent CCV. Internal Standard within -50% to +200% of area from the most recent CCV.	Inspect mass spectrometer and LC for malfunctions. Reanalysis of samples analyzed during failure is mandatory.	Lab Manager/Analyst or certified instrument technician	

QAPP Worksheet #25: Analytical Instrument and Equipment Maintenance, Testing, and Inspection Table

Instrument/ Equipment	Maintenance Activity	Testing/Inspection Activity	Frequency	Acceptance Criteria	Corrective Action	Responsible Person	SOP Reference[1]
GC/MS	See SOM02.3; as per instrument manufacturer's recommendations	See SOM02.3; as per instrument manufacturer's recommendations	See SOM02.3; as per instrument manufacturer's recommendations	Acceptable re-calibration; see SOM02.3	Inspect the system, correct problem, re-calibrate and/or reanalyze samples.	Laboratory GC/MS Technician	SOM02.3
GC/ECD	See SOM02.3; as per instrument manufacturer's recommendations	See SOM02.3; as per instrument manufacturer's recommendations	See SOM02.3; as per instrument manufacturer's recommendations	Acceptable re-calibration; see SOM02.3	Inspect the system, correct problem, re-calibrate and/or reanalyze samples.	CLP Laboratory GC/ECD Technician	SOM02.3
ICP-AES	As per instrument manufacturer's recommendations	As per instrument manufacturer's recommendations; check connections	As per instrument manufacturer's recommendations	Acceptable re-calibration; see ISM02.3	Inspect the system, correct problem, re-calibrate and/or reanalyze samples.	Laboratory ICP-AES Technician	ISM02.3
CVAAS	As per instrument manufacturer's recommendations	As per instrument manufacturer's recommendations; check connections	As per instrument manufacturer's recommendations	Acceptable re-calibration; see ISM02.3	Inspect the system, correct problem, re-calibrate and/or reanalyze samples.	Laboratory CVAA Technician	ISM02.3
LC-MS/MS	Replace columns as needed. Check eluent reservoirs Other maintenance specified in lab Equipment Maintenance SOP.	As per instrument manufacturer's recommendations; check connections	Ion source, injector, column, column flow, purge lines, purge flow.	Prior to ICAL and/or as necessary.	Acceptable calibration or CCV	Correct the problem and repeat calibration or CCV	Analyst, Department Manager

[1] See the Analytical SOP References table (Worksheet #23)

CLP – Contract Laboratory Program
CVAAS – Cold Vapor Atomic Absorption Spectrometer
GC/ECD – Gas Chromatograph/Electron Capture Detector
GC/MS – Gas Chromatograph/Mass Spectrometer
ICP-AES – Inductively Coupled Plasma–atomic Emission Spectrometer
SOP – Standard Operating Procedure

QAPP Worksheet #26: Sample Handling System

SAMPLE COLLECTION, PACKAGING, AND SHIPMENT
Sample Collection (Personnel/Organization): Site Manager and sampling team, Region 2 SAT
Sample Packaging (Personnel/Organization): Site Manager and sampling team, Region 2 SAT
Coordination of Shipment (Personnel/Organization): Site Manager and sampling team, Region 2 SAT
Type of Shipment/Carrier: FedEx
SAMPLE RECEIPT AND ANALYSIS
Sample Receipt (Personnel/Organization): Sample Custodians, CLP and subcontract laboratories
Sample Custody and Storage (Personnel/Organization): Sample Custodians, CLP and subcontract laboratories
Sample Preparation (Personnel/Organization): Lab Technicians, CLP and subcontract laboratories
Sample Determinative Analysis (Personnel/Organization): Lab Analysts, CLP and subcontract laboratories
SAMPLE ARCHIVING
Field Sample Storage (No. of days from sample collection): Samples to be shipped same day of collection or next day, and arrive at laboratories within 24 hours (1 day) of sample shipment
Sample Extract/Digestate Storage (No. of days from extraction/digestion): Per analytical methodology; see Worksheet #19
SAMPLE DISPOSAL
Personnel/Organization: Sample Custodians, CLP and subcontract laboratories
Number of Days from Analysis: Until analysis and QA/QC checks are completed; as per analytical methodology; see Worksheet #19.

ED_001670_00012770-00060

QAPP Worksheet #27: Sample Custody Requirements

Sample Identification Procedures: Each sample collected by Region 2 SAT will be designated by a code that will identify the site. The code will be **SGPP**. The media type will follow the numeric site code. A hyphen will separate the site code and media type. Specific media types are as follows: **S** – Surface Soil; **SS** – Subsurface Soil; **MW** – On-site Monitoring Well; **EPA-GW** – EPA Monitoring Well; **DW** – Potable Well; **OW** – Observation/Test Well; **WW** – Waste Water; **RIN** – Rinsate Blank; **TB** – Trip Blank; and **DB** – Decontamination Water Blank.

The media type will be followed by numbers based on sampling location and will be recorded in the field logbook. The sequential soil sample numbers will be followed by letters designating the relative depths of the subsurface samples. Duplicate samples will be identified in the same manner as other samples and will be distinguished and documented in the field logbook. For rinsate blanks, trip blanks, and decontamination water blanks, the media code will be followed by sequential numbering on a daily basis.
Examples:
SGPP-S01 = Site code (0311), surface soil sample (S), direct-push borehole S01;
SGPP-SS01A = Site code (0311), subsurface soil sample (SS), direct-push borehole S01, first subsurface interval sampled (A);
SGPP-EPA–GW01 = Site code (0311), ground water sample from EPA monitoring well MW-1 (EPA-GW01).

Field Sample Custody Procedures (sample collection, packaging, shipment, and delivery to laboratory): Each sample will be individually identified and labeled after collection, then sealed with custody seals and enclosed in a plastic cooler. The sample information will be recorded on chain-of custody (COC) forms, and will be either hand delivered or shipped to the appropriate laboratory via overnight delivery service or courier. COC records must be prepared in Scribe to accompany samples from the time of collection and throughout the shipping process. The sampling team will sign and date the COC record, which will be considered complete upon receipt at the laboratory. Every transfer of custody must be noted and signed for, and the sampling team will keep copies of all COCs. The COC record will be maintained from the time the sample is collected to its final deposition. When samples are not under direct control of the individual responsible for them, they must be stored in a locked container sealed with a custody seal. The COC record should include (at minimum) the following: 1) Sample identification number; 2) Sample information; 3) Sample location; 4) Sample date; 5) Sample time; 6) Sample type/matrix; 7) Sample container type; 8) Sample analysis requested; 9) Name(s) and signature(s) of sampler(s); and 10) Signature(s) of any individual(s) with custody of samples. When samples are not under direct control of the individual responsible for them, they must be stored in a locked container sealed with a custody seal.

For these events each shipping container will have its own COC record. A separate COC form must accompany each cooler for each daily shipment. The COC form must address all samples in that cooler, but not address samples in any other cooler. This practice maintains the COC for all samples in case of mis-shipment.

Laboratory Sample Custody Procedures (receipt of samples, archiving, and disposal): A sample custodian at the laboratories will accept custody of the shipped samples, and check them for discrepancies, proper preservation, integrity, etc. If noted, issues will be forwarded to the laboratory manager for corrective action. The sample custodian will relinquish custody to the appropriate department for analysis. Disposal of the samples will occur only after analyses and QA/QC checks are completed.

ED_001670_00012770-00061

QAPP Worksheet #28: QC Samples Table (page 1 of 5)

Matrix	Aqueous/Soil
Analytical Group	Organic TAL VOCs
Concentration Level	Trace (µg/L) and Low/Medium (µg/kg and µg/L)
Sampling SOP(s)	see Worksheet # 21
Analytical Method/SOP Reference	SOM02.3
Sampler's Name	TBD
Field Sampling Organization	WESTON Region 2 SAT
Analytical Organization	TBD
No. of Samples	50/72

Lab QC Sample:	Frequency/ Number	Method/SOP QC Acceptance Limits		Corrective Action	Person(s) Responsible for Corrective Action	Data Quality Indicator (DQI)	Measurement Performance Criteria	
Method Blank	one every 12 hours	No analyte > CRQL*		Suspend analysis; reanalyze blank and affected samples	CLP Laboratory GC/MS Technician	Accuracy	No analyte > CRQL*	
Deuterated Monitoring Compounds	all samples	Vinyl chloride-d_3	30-150 %R	Check calculations and instruments, reanalyze affected samples; up to three DMCs per sample may fail to meet recovery limits (per SOM02.3, p. D-42/ LOW/MED VOA, Section 11.3.4)	CLP Laboratory GC/MS Technician	Accuracy	Vinyl chloride-d_3	30-150 %R
		Chloroethane-d_5	30-150 %R				Chloroethane-d_5	30-150 %R
		1,1-Dichloroethene-d_2	45-110 %R				1,1-Dichloroethene-d_2	45-110 %R
		2-Butanone-d_5	20-135 %R				2-Butanone-d_5	20-135 %R
		Chloroform-d	40-150 %R				Chloroform-d	40-150 %R
		1,2-Dichloroethane-d_4	70-130 %R				1,2-Dichloroethane-d_4	70-130 %R
		Benzene-d_6	20-135 %R				Benzene-d_6	20-135 %R
		1,2-Dichloropropane-d_6	70-120 %R				1,2-Dichloropropane-d_6	70-120 %R
		Toluene-d_8	30-130 %R				Toluene-d_8	30-130 %R
		trans-1,3-Dichloropropene-d_4	30-135 %R				trans-1,3-Dichloropropene-d_4	30-135 %R
		2-Hexanone-d_5	20-135 %R				2-Hexanone-d_5	20-135 %R
		1,1,2,2-Tetrachloroethane-d_2	45-120 %R				1,1,2,2-Tetrachloroethane-d_2	45-120 %R
		1,2-Dichlorobenzene-d_4	75-120 %R				1,2-Dichlorobenzene-d_4	75-120 %R
Internal Standards	all samples	50-200% of response area; ± 10-second retention time shift		Check calculations and instruments, reanalyze affected samples	CLP Laboratory GC/MS Technician	Accuracy	50-200% of response area; ± 10-second retention time shift	

*With the exception of methylene chloride, 2-butanone, and acetone, which can be up to 2 times the CRQL (EPA CLP National Functional Guidelines, Final, July 2007).

QAPP Worksheet #28: QC Samples Table (page 2 of 5)

Matrix	Aqueous/Soil
Analytical Group	Organic TAL SVOCs
Concentration Level	Low/Medium (µg/kg and µg/L)
Sampling SOP(s)	see Worksheet # 21
Analytical Method/SOP Reference	SOM02.3
Sampler's Name	TBD
Field Sampling Organization	WESTON Region 2 SAT
Analytical Organization	TBD
No. of Samples	40/72

Lab QC Sample	Frequency/Number	Method/SOP QC Acceptance Limits		Corrective Action	Person(s) Responsible for Corrective Action	Data Quality Indicator (DQI)	Measurement Performance Criteria	
Method Blank	1 per ≤ 20 samples or whenever samples extracted	No analyte > CRQL*		Suspend analysis; reextract and reanalyze blank and affected samples	CLP Laboratory GC/MS Technician	Accuracy	No analyte > CRQL*	
Deuterated Monitoring Compounds	all samples	Phenol-d_5	17-103 %R	Check calculations and instruments, reanalyze affected samples; up to four DMCs per sample may fail to meet recovery limits but each %R must be >0 (SOM02.3, p. D-52/ SVOA, Section 11.3.4)	CLP Laboratory GC/MS Technician	Accuracy	Phenol-d_5	17-103 %R
		Bis(2-chloroethyl)ether-d_8	12-98 %R				Bis(2-chloroethyl)ether-d_8	12-98 %R
		2-Chlorophenol-d_4	13-101 %R				2-Chlorophenol-d_4	13-101 %R
		4-Methylphenol-d_8	8-100 %R				4-Methylphenol-d_8	8-100 %R
		Nitrobenzene-d_5	16-103 %R				Nitrobenzene-d_5	16-103 %R
		2-Nitrophenol-d_4	16-104 %R				2-Nitrophenol-d_4	16-104 %R
		2,4-Dichlorophenol-d_3	23-104 %R				2,4-Dichlorophenol-d_3	23-104 %R
		4-Chloroaniline-d_4	1-145 %R				4-Chloroaniline-d_4	1-145 %R
		Dimethylphthalate-d_6	43-111 %R				Dimethylphthalate-d_6	43-111 %R
		Acenaphthylene-d_8	20-97 %R				Acenaphthylene-d_8	20-97 %R
		4-Nitrophenol-d_4	16-166 %R				4-Nitrophenol-d_4	16-166 %R
		Fluorene-d_{10}	40-108 %R				Fluorene-d_{10}	40-108 %R
		4,6-Dinitro-2-methylphenol-d_2	1-121 %R				4,6-Dinitro-2-methylphenol-d_2	1-121 %R
		Anthracene-d_{10}	22-98 %R				Anthracene-d_{10}	22-98 %R
		Pyrene-d_{10}	51-120 %R				Pyrene-d_{10}	51-120 %R
		Benzo(a)pyrene-d_{12}	43-111 %R				Benzo(a)pyrene-d_{12}	43-111 %R
		Fluoranthene-d_{10} (SIM)	50-150 %R				Fluoranthene-d_{10} (SIM)	50-150 %R
		2-Methylnapthalene-d_{10} (SIM)	50-150 %R				2-Methylnapthalene-d_{10} (SIM)	50-150 %R
Internal Standards	all samples	50-200% of area, ± 30 sec retention time shift		Check calculations and instruments, reanalyze affected samples	CLP Laboratory GC/MS Technician	Accuracy	50-200% of area, ± 30 sec retention time shift	

*With the exception of bis(2-etheylhexyl)phthalate, which can be up to 5 times the CRQL (USEPA CLP Nat'l Functional Guidelines, Final, July 2007).

QAPP Worksheet #28: QC Samples Table (page 3 of 5)

Matrix	Aqueous/Soil
Analytical Group	Organic TAL Aroclors
Concentration Level	Low/Medium (µg/kg and µg/L)
Sampling SOP(s)	see Worksheet # 21
Analytical Method/SOP Reference	SOM02.3
Sampler's Name	TBD
Field Sampling Organization	WESTON Region 2 SAT
Analytical Organization	TBD
No. of Samples	40/72

Lab QC Sample:	Frequency/Number	Method/SOP QC Acceptance Limits		Corrective Action	Person(s) Responsible for Corrective Action	Data Quality Indicator (DQI)	Measurement Performance Criteria	
Method Blank	1 per ≤ 20 samples or whenever samples extracted	No analyte > CRQL		Suspend analysis; reextract and reanalyze blank and affected samples	CLP Laboratory GC/ECD Technician	Accuracy	No analyte > CRQL	
Matrix Spike	1 per ≤ 20 samples	Aroclor-1016	29-135 %R		CLP Laboratory GC/ECD Technician	Accuracy	Aroclor-1016	29-135 %R
		Aroclor-1260	29-135 %R				Aroclor-1260	29-135 %R
Matrix Spike Duplicate	1 per ≤ 20 samples	Aroclor-1016	0-15 %RPD		CLP Laboratory GC/ECD Technician	Precision	Aroclor-1016	0-15 %RPD
		Aroclor-1260	0-20 %RPD				Aroclor-1260	0-20 %RPD
Laboratory Control Sample	1 per ≤ 20 samples	Aroclor-1016	50-150 %R		CLP Laboratory GC/ECD Technician	Accuracy	Aroclor-1016	50-150 %R
		Aroclor-1260	50-150 %R				Aroclor-1260	50-150 %R
Surrogate	all samples		30-150 %R		CLP Laboratory GC/ECD Technician	Accuracy		30-150 %R

QAPP Worksheet #28: QC Samples Table (page 4 of 5)

Matrix	Aqueous/Soil
Analytical Group	Inorganic TAL Metals (including Hg)
Concentration Level	Low/Medium (mg/kg and µg/L)
Sampling SOP(s)	see Worksheet # 21
Analytical Method/SOP Reference	ISM02.3 – ICP-AES
Sampler's Name	TBD
Field Sampling Organization	WESTON Region 2 SAT
Analytical Organization	TBD
No. of Samples	40/72

Lab QC Sample:	Frequency/Number	Method/SOP QC Acceptance Limits	Corrective Action	Person(s) Responsible for Corrective Action	Data Quality Indicator (DQI)	Measurement Performance Criteria
Preparation Blank	1 per ≤ 20 samples	No analyte > CRQL, unless analyte concentration in associated samples is ≥ 10x blank concentration	Suspend analysis until source rectified; redigest and reanalyze affected samples	CLP Laboratory ICP-AES Technician	Accuracy	No analyte > CRQL, unless analyte concentration in associated samples is ≥ 10x blank concentration
Spike	1 per ≤ 20 samples	75-125%R* (exception: Ag)	Flag outliers	CLP Laboratory ICP-AES Technician	Accuracy	75-125%R*
Duplicate	1 per ≤ 20 samples	± 20% RPD**	Flag outliers	CLP Laboratory ICP-AES Technician	Precision	± 20% RPD**
Post-Digestion Spike	after any analyte (except Ag) fails spike %R	75-125%R	Flag outliers	CLP Laboratory ICP-AES Technician	Accuracy	75-125%R
Interference Check Sample [ICP Analysis Only]	beginning of each run	Result within ± 20% or ± CRQL of true value, whichever is greater	Check calculations and instruments, reanalyze affected samples	CLP Laboratory ICP-AES Technician	Sensitivity	Result within ± 20% or ± CRQL of true value, whichever is greater
Laboratory Control Sample	1 per ≤ 20 samples	70-130%R (50-150%R for Ag/Sb)	Suspend analysis until source rectified; redigest and reanalyze affected samples	CLP Laboratory ICP-AES Technician	Accuracy	70-130%R

*Except when the sample concentration is greater than 4 times the spike concentration, then disregard the recoveries; no data validation action taken.
**Except when the sample and/or duplicate concentration is less than 5 times the CRQL, then ± CRQL.

QAPP Worksheet #28: QC Samples Table (page 5 of 5)

Matrix	Aqueous/Soil
Analytical Group	PFCs
Concentration Level	Low (µg/kg and µg/L)
Sampling SOP(s)	See Worksheet #21
Analytical Method/SOP Reference	ALS LCP-PFC
Sampler's Name	TBD
Field Sampling Organization	WESTON Region 2 SAT
Analytical Organization	ALS
No. of Samples	40/72

Lab QC Sample:	Frequency/ Number	Method/SOP QC Acceptance Limits[1]	Corrective Action	Person(s) Responsible for Corrective Action	Data Quality Indicator (DQI)	Measurement Performance Criteria
LOD determination and verification	At initial set-up and verified quarterly. If a laboratory uses multiple instruments for a given method, the LOD must be verified on each.	The apparent signal to noise ratio must be at least 3 and the results must meet all method requirements for analyte identification.	If the LOD verification fails, the laboratory must: 1) Repeat the detection limit determination and LOD verification at a higher concentration; or 2) Perform and pass two consecutive LOD verifications at a higher concentration. The LOD is set at the higher concentration.	Analyst Lab QA Officer Project Chemist	Bias/ Representativeness	QC acceptance criteria as specified by Lab SOP
LOQ establishment and verification	At initial setup: 1) Verify LOQ; and 2) Determine precision and bias at the LOQ. QSM 5.0	1) The LOQ and associated precision and bias must meet client requirements and must be reported; or 2) In the absence of client requirements, must meet control limits of the LCS. QSM 5.0	If the LOQ verification fails, the laboratory must either establish a higher LOQ or modify method to meet the client-required precision and bias.	Analyst Lab QA Officer Project Chemist	Sensitivity/Bias	QC acceptance criteria as specified by Lab SOP

QAPP Worksheet #28: QC Samples Table (page 5 of 5 continued)

MB	One per prep batch	No analytes detected >LOQ and greater than 1/10 the amount measured in any sample. For common lab contaminants, no analytes detected >LOQ.	Correct problem. If required, re-prep and reanalyze MB and all samples processed with the contaminated blank.	Analyst Lab QA Officer Project Chemist	Sensitivity/Bias	No analytes detected >LOQ. For common laboratory contaminants, no analytes detected > LOQ.
LCS	One per batch of at most 20 samples analyzed of similar matrix per analytical method.	Lab statistical derived control limits for compounds with isotopically labeled compounds (see SOP)	Correct problem. If required, re-prep and reanalyze the LCS and all samples processed in the associated preparatory batch for the failed analytes.	Analyst Lab QA Officer Project Chemist	Accuracy	QC acceptance criteria as specified by Lab SOP

[1]Laboratory may establish in-house QC criteria.
Method and SOP details will be determined after procurement of subcontracted laboratory

QAPP Worksheet #29: Project Documents and Records Table

Sample Collection Documents and Records	Analysis Documents and Records	Data Assessment Documents and Records	Other
• Field logbooks (not hard cover notebooks or logbooks treated with waterproofing) • COC forms • Field data sheets • Photo-documentation • GPS data	• Sample receipt logs • Internal and external COC forms • Equipment calibration logs • Sample preparation worksheets/logs • Sample analysis worksheets/run logs • Telephone/email logs • Corrective action documentation	• Data validation reports • Field inspection checklist(s) • Review forms for electronic entry of data into database • Corrective action documentation	• HRS scoresheets

COC – Chain-of-Custody
HRS – Hazard Ranking System

QAPP Worksheet #30: Analytical Services Table

Matrix	Analytical Group	Concentration Level	Analytical SOP	Data Package Turnaround Time	Laboratory/Organization (Name and Address, Contact Person and Telephone Number)	Backup Laboratory/Organization (Name and Address, Contact Person and Telephone Number)
Aqueous	Organic TAL VOCs	Trace	SOM02.3	28 days	TBD	N/A
Soil/Aqueous	Organic TAL VOCs	Low/Medium	SOM02.3	42/28 days	TBD	N/A
Soil/Aqueous	Organic TAL SVOCs	Low/Medium	SOM02.3	42/28 days	TBD	N/A
Soil/Aqueous	Organic TAL Aroclors	Low/Medium	SOM02.3	42/28 days	TBD	N/A
Soil/Aqueous	Inorganic TAL (including Hg)	Low/Medium	ISM02.3	42/28 days	TBD	N/A
Soil/Aqueous	PFCs	Low	LCP-PFC	28 days	ALS	N/A
Soil	TOC	Low/Medium	Lloyd Kahn Method	28 days	EPA Region 2 DESA	N/A
Soil	Grain Size (Hydrometer Method)	N/A	ASTM D422-63	42 days		N/A
Soil	pH	N/A	DESA C-24	42 days		N/A
Soil	Specific Conductance	N/A	ALS 04-SPC	28 Days	ALS	N/A

N/A – Not Applicable
SVOC – Semivolatile Organic Compound
TAL – Target Analyte List
TBD – To Be Determined
TOC – Total Organic Carbon
VOC – Volatile Organic Compound
PFC – Perfluorinated Compound

QAPP Worksheet #31: Planned Project Assessments Table

Assessment Type	Frequency	Internal or External	Organization Performing Assessment	Person(s) Responsible for Performing Assessment (Title and Organizational Affiliation)	Person(s) Responsible for Responding to Assessment Findings (Title and Organizational Affiliation)	Person(s) Responsible for Identifying and Implementing Corrective Actions (Title and Organizational Affiliation)	Person(s) Responsible for Monitoring Effectiveness of Corrective Actions (Title and Organizational Affiliation)
Laboratory Technical Systems/ Performance Audits	As required	External	Regulatory Agency	Regulatory Agency	Subcontract Laboratory	EPA CLP and Subcontract Laboratories	EPA or other Regulatory Agency
Performance Evaluation Samples	As required	External	Regulatory Agency	Regulatory Agency	Subcontract Laboratory	EPA CLP and Subcontract Laboratories	EPA or other Regulatory Agency

EPA – U.S. Environmental Protection Agency

ED_001670_00012770-00070

QAPP Worksheet #32: Assessment Findings and Corrective Action Responses

Assessment Type	Nature of Deficiencies Documentation	Individual(s) Notified of Findings (Name, Title, Organization)	Timeframe of Notification	Nature of Corrective Action Response Documentation	Individual(s) Receiving Corrective Action Response (Name, Title, Org.)	Timeframe for Response
Project Readiness Review	Checklist or logbook entry	Region 2 SAT PM	Immediately to within 24 hours of review	Checklist or logbook entry	Region 2 SAT PM	Immediately to within 24 hours of review
Field Observations/ Deviations from Work Plan	Logbook	Region 2 SAT PM and EPA Task Monitor	Immediately to within 24 hours of deviation	Logbook	Region 2 SAT PM and EPA Task Monitor	Immediately to within 24 hours of deviation
Laboratory Technical Systems/ Performance Audits	Written Report	EPA CLP and Subcontract Laboratories	30 days	Letter	EPA CLP and Subcontract Laboratories	14 days
On-Site Field Inspection	Written Report	Region 2 SAT PM	7 calendar days after completion of the audit	Letter/Internal Memorandum	Region 2 SAT PM and EPA Task Monitor	To be identified in the cover letter of the report
Performance Evaluation Samples	Electronic Report	EPA CLP and Subcontract Laboratories	30 days	Letter or Written Report	EPA CLP and Subcontract Laboratories	14 days

CLP – Contract Laboratory Program
EPA – U.S. Environmental Protection Agency
PM – Project Manager
SAT – Site Assessment Team

QAPP Worksheet #33: QA Management Reports Table

Type of Report	Frequency (daily, weekly, monthly, quarterly, annually, etc.)	Projected Delivery Date(s)	Person(s) Responsible for Report Preparation (Title and Organizational Affiliation)	Report Recipient(s) (Title and Organizational Affiliation)
EPA CLP and Subcontract Laboratory Data (unvalidated)	As performed	See Worksheet #30	Subcontract Laboratories and WESTON subcontract laboratories	EPA Region 2 RSCC, EPA Task Monitor, and Region 2 SAT PM
EPA CLP and Subcontract Laboratory Data (validated)	As performed	See Worksheet #30	EPA Region 2 HWSS and Region 2 SAT	EPA Region 2 Task Monitor and Region 2 SAT PM
Laboratory Technical Systems/ Performance Audits	As performed	Unknown	EPA or other Regulatory Agency	EPA CLP and Subcontract Laboratories
Performance Evaluation Samples	As performed	Unknown	EPA or other Regulatory Agency	EPA CLP and Subcontract Laboratories
On-Site Field Inspection	As performed	7 calendar days after completion of the inspection	Region 2 SAT project personnel	Region 2 SAT PM
Field Change Request	As required per field change	Upon identification of need for field change	Region 2 SAT PM	EPA Task Monitor
Final Report	As performed	To be determined	Region 2 SAT project personnel	EPA Task Monitor

CLP – Contract Laboratory Program
EPA – U.S. Environmental Protection Agency
HWSS – Hazardous Waste Support Section
PM – Project Manager
RSCC – Regional Sample Control Center
SAT – Site Assessment Team

QAPP Worksheet #34: Verification (Step I) Process Table

Verification Input	Description	Internal/ External	Responsible for Verification (Name, Organization)
Site/field logbooks	Field notes will be prepared daily by the Region 2 SAT sampling personnel and will be complete, appropriate, legible, and pertinent. Upon completion of field work, logbooks will be placed in the project files.	I	Region 2 SAT project personnel
Chains of custody	COC forms will be reviewed against the samples packed in the specific cooler prior to shipment. The reviewer will initial the form. An original COC will be sent with the samples to the laboratory, while copies are retained for (1) the Sampling Trip Report and (2) the project files.	I	Region 2 SAT project personnel
Sampling Trip Reports	STRs will be prepared for each sampling event. Information in the STR will be reviewed against the COC forms, and potential discrepancies will be discussed with field personnel to verify locations, dates, etc.	I	Region 2 SAT project personnel
Laboratory analytical data package	Data packages will be reviewed/verified internally by the laboratory performing the work for completeness and technical accuracy prior to submittal.	I	EPA CLP and WESTON subcontract laboratories
Laboratory analytical data package	Data packages will be reviewed as to content and sample information upon receipt.	I	EPA ESAT contractor and WESTON subcontract data validation personnel
Final Sample Report	The project data results will be compiled in a report for the project. Entries will be reviewed/verified against hardcopy information.	I	Region 2 SAT project personnel

CLP – Contract Laboratory Program
COC – Chain-of-Custody
ESAT – Environmental Services Assistance Team
EPA – U.S. Environmental Protection Agency
SAT – Site Assessment Team
STR – Sampling Trip Report

QAPP Worksheet #35: Validation (Steps IIa and IIb) Process Table

Step IIa/IIb	Validation Input	Description	Responsible for Validation (Name, Organization)
IIa	SOPs	Ensure that the sampling methods/procedures outlined in QAPP were followed, and that any deviations were noted/approved.	Region 2 SAT project personnel
IIb	SOPs	Determine potential impacts from noted/approved deviations, in regard to PQOs.	Region 2 SAT project personnel
IIa	Chains of custody	Examine COC forms against QAPP and laboratory contract requirements (e.g., analytical methods, sample identification, etc.).	EPA Region 2 data validation personnel with contractor support and WESTON-subcontracted validation personnel
IIa	Laboratory data package	Examine packages against QAPP and laboratory contract requirements, and against COC forms (e.g., holding times, sample handling, analytical methods, sample identification, data qualifiers, QC samples, etc.).	EPA Region 2 data validation personnel with contractor support and WESTON-subcontracted validation personnel
IIb	Laboratory data package	Determine potential impacts from noted/approved deviations, in regard to PQOs. Examples include QC sample limits (precision/accuracy).	EPA Region 2 data validation personnel with contractor support and WESTON-subcontracted validation personnel
IIb	Field duplicates	Compare results of field duplicate (or replicate) analyses with RPD criteria	EPA Region 2 data validation personnel with contractor support and WESTON-subcontracted validation personnel

COC – Chain-of-Custody
EPA – U.S. Environmental Protection Agency
PQO – Project Quality Objective
QAPP – Quality Assurance Project Plan
QC – Quality Control
RPD – Relative Percent Difference
SAT – Site Assessment Team
SOP – Standard Operating Procedure

QAPP Worksheet #36: Validation (Steps IIa and IIb) Summary Table

Step IIa/IIb	Matrix	Analytical Group	Concentration Level	Validation Criteria	Data Validator (title and organizational affiliation) [1]
IIa / IIb	Soil	Organic TAL VOCs	Low/Medium	HWSS SOP HW-33A Rev. 0: Low/Medium Volatile Data Validation (July 2015)	EPA Region 2 data validation personnel with contractor support and WESTON-subcontracted validation personnel
		Organic TAL SVOCs		HWSS SOP HW-35A Rev. 0: Semivolatile Data Validation (June 2015)	
		Organic TAL Aroclors		HWSS SOP No. HW-37A Revision 3: Polychlorinated Biphenyl (PCB) Aroclor Data Validation (June 2015)	
		Inorganic TAL Metals (including Hg)		HWSS SOP HW-3a Rev. 0: ICP-AES Data Validation (July 2015)	
		Organic TAL VOCs	Trace	HWSS SOP HW-34A Rev. 0: Trace Volatile Data Validation (July 2015)	
		PFCs	Low	Perfluorinated Compounds by High Performance Liquid Chromatography/Tandem Mass Spectrometry (HPLC/MS/MS), Rev. 5 (ALS Environmental, 12/21/2015)	

1 The Region 2 data validation SOPs are located here: https://www.epa.gov/quality/managing-quality-environmental-data-epa-region-2

EPA – U.S. Environmental Protection Agency
HWSS – Hazardous Waste Support Section
ICP-AES – Inductively Coupled Plasma–atomic Emission Spectrometer
PFC – Perfluorinatec Compounds
SOP – Standard Operating Procedure
SVOC – Semivolatile Organic Compound
TAL – Target Analyte List; VOC – Volatile Organic Compound

QAPP Worksheet #37: Usability Assessment

Summarize the usability assessment process and all procedures, including interim steps and any statistics, equations, and computer algorithms that will be used:

A hard copy of field data is maintained in a designated field or site logbook, which by definition will be usable as a project reference. Region 2 SAT will perform post-processing of GPS data in accordance with EPA Region 2 guidelines, and will consider the accuracy and usability of the locational data. Laboratory data packages are validated, and final data reports are generated. The data validator will review and qualify chemical analytical data for usability according to EPA Region 2 data validation SOPs (see Worksheet #36). Questions raised during the analytical data review process are resolved by contacting the respective site personnel and laboratories as appropriate for resolution. All communications are documented in the data validation record with comments as to resolution of the observed deficiencies. For J-qualified results (i.e., estimated values), Region 2 SAT will assess usability according to EPA 540-F-94-028, *Using Qualified Data to Document an Observed Release and Observed Contamination*, November 1996.

Describe the evaluative procedures used to assess overall measurement error associated with the project:

Based on UFP-QAPP guidance, Region 2 SAT implements a "Graded Approach" for data collection activities that are either exploratory or small in nature or where specific decisions cannot be identified, since this guidance indicates that the formal DQO process is not necessary. Region 2 SAT will initially use a systematic planning process to identify project quality objectives (PQO), action limits, and to select appropriate sampling, analytical, and assessment activities. The validation process determines if the data satisfy the QA criteria. After the data pass the data validation process, Region 2 SAT will evaluate the results according to the HRS.

Identify the personnel responsible for performing the usability assessment:

Data validation personnel and EPA Region 2 Task Monitor

Describe the documentation that will be generated during usability assessment and how usability assessment results will be presented so that they identify trends, relationships (correlations), and anomalies:

The list of documentation generated during the usability assessment may include tables, graphs, maps, or text reports developed to assist the data user and present results. A copy of the most current approved QAPP is provided to all personnel identified on the distribution list, and an electronic copy is available in the SAT-Region8START network folder. All data deliverable files (original, analytical, hard copies, electronic copies, etc.) will be copied and provided to EPA in the appropriate format.

ATTACHMENT 1: Tables and Figures

Table 1: **Summary of CLP Analytical Services**

Table 2: **Summary of Non-CLP Analytical Services**

Table 3: **Sample Descriptions/Rationale**

Figure 1: **Proposed Monitoring Well and Public Supply Well Sample Location Map**

Figure 2: **Proposed Background Drinking Water Sample Location Map**

Figure 3: **Proposed On-Site Sample Location Map**

TABLE 1
SUMMARY OF CLP ANALYTICAL SERVICES
SAINT-GOBAIN PERFORMANCE PLASTICS, VILLAGE OF HOOSICK FALLS, NY

Sample Type	Number of Samples	Matrix	Sampling Device	Sample Container [1]	Sample Preservation	Technical Holding Time [2]	CLP Laboratory Analyses [3]
Surface Soil Subsurface Soil	16 (including 1 duplicate) 56 (including 3 duplicates)	Soil/Sediment (Low/Medium Concentration)	Direct-push sampling equipment, dedicated En Core sampling devices, HDPE scoops, and stainless-steel trays	Three 5-gram En Core dedicated sampling devices One 4-oz. glass jar	Cool to 4°C	48 hours to preserve; 7 days to analyze	Organic TAL VOCs CLP SOW SOM02.2 % Moisture
				One 8-oz. glass jar	Cool to 4°C	14 days to extract; 40 days to analyze	Organic TAL SVOCs CLP SOW SOM02.2
				One 8-oz. glass jar	Cool to 4°C	14 days to extract; 40 days to analyze	Organic TAL Aroclorss CLP SOW SOM02.2
				One 8-oz. glass jar	Cool to 4°C	6 months to analyze (except Hg - 28 days)	TAL Inorganics (incl. Hg) CLP SOW ISM02.2
Ground Water (Monitoring and Observation Wells) Wastewater Rinsate Blank Ground Water (Potable Wells) Trip Blank (VOCs only)	18 (including 2 duplicates) 4 10 8 (including 1 duplicate) 10	Aqueous (Low–Medium Concentration) Aqueous (Trace Concentration)	Stainless-steel submersible pump, stainless-steel direct-dip sampler, sample jars	Three 40-mL vials w/ Teflon-lined septum caps	HCl to pH<2 Cool to 4°C	14 days to analyze	Organic TAL VOCs CLP SOW SOM02.2
				Two 1-liter amber glass bottles	Cool to 4°C	7 days to extract; 40 days to analyze	Organic TAL SVOCs CLP SOW SOM02.2
				Two 1-liter amber glass bottles	Cool to 4°C	7 days to extract; 40 days to analyze	Organic TAL Aroclors CLP SOW SOM02.2
				One 1-liter poly bottle	HNO3 to pH<2 Cool to 4°C	6 months to analyze (except Hg - 28 days)	TAL Inorganics (incl. Hg) CLP SOW ISM02.2

[1] = Sample containers are certified clean by the manufacturer.
[2] = Technical holding times are calculated from the date of sample collection.
[3] = EPA Contract Laboratory Program (CLP), Statements of Work (SOW) for Organic Superfund Methods SOM02.2 (August 2014) and Inorganic Superfund Methods ISM02.2 (August 2014), or most current revisions.

TABLE 2
SUMMARY OF NON-CLP ANALYTICAL SERVICES
SAINT-GOBAIN PERFORMANCE PLASTICS, VILLAGE OF HOOSICK FALLS, NY

Sample Type	Number of Samples[1]	Matrix	Sampling Device	Sample Container [2]	Sample Preservation	Technical Holding Time [3]	Non-CLP Laboratory Analyses
Surface Soil Subsurface Soil	16 (including 1 duplicate) 56 (including 3 duplicates)	Soil/Sediment (Low/Medium Concentration)	Direct-push sampling equipment, dedicated En Core sampling devices, HDPE scoops, and stainless-steel trays	One 4-oz. HDPE jar	Cool to 4°C	14 days to extract; 40 days to analyze	PFCs ALS SOP Perfluorinated Compounds by High Performance Liquid Chromatography/Tandem Mass Spectrometry December 2015
				One 16-oz. glass jar	Cool to 4°C	28 days	TOC Lloyd Kahn Method (EPA R2 Lab SOP C-88)
					N/A	N/A	Grain Size ASTM D422-63 (EPA R2 Lab SOP Bio-8.3)
					N/A	7 days	pH
				One 4-oz. glass jar	N/A	14 days	Specific Conductance
Ground Water (Monitoring and Observation Wells) Wastewater Rinsate Blank Potable Wells Decontamination Water Blank	18 (including 2 duplicates) 4 10 8 (including 1 duplicate) 1	Aqueous (Low Concentration)	Stainless-steel submersible pump, stainless-steel direct-dip sampler, sample jars	One 250-mL HDPE bottle	Cool to 4°C	14 days	PFCs ALS SOP Perfluorinated Compounds by High Performance Liquid Chromatography/Tandem Mass Spectrometry December 2015

(1) = Duplicate samples not required for TOC, grain size, pH, and conductance.
(2) = Sample containers are certified clean by the manufacturer.
(3) = Technical holding times are calculated from the date of sample collection.

TABLE 3
SAMPLE DESCRIPTIONS/RATIONALE
SAINT-GOBAIN PERFORMANCE PLASTICS, VILLAGE OF HOOSICK FALLS, NY

SAMPLE NUMBER	DESCRIPTION/RATIONALE
ON-SITE SOIL SAMPLES (LOW–MEDIUM CONCENTRATION)*	
SGPP-S01	Surface soil sample from a direct-push borehole within the Saint-Gobain Performance Plastics (SGPP) property for evaluation of background conditions. Depth: TBD. Matrix spike/matrix spike duplicate (MS/MSD) for quality assurance/quality control (QA/QC) purposes.
SGPP-SS01A	Subsurface soil sample from a direct-push borehole within the SGPP property for evaluation of background conditions. Depth: TBD.
SGPP-SS01B	Subsurface soil sample from a direct-push borehole within the SGPP property for evaluation of background conditions. Depth: TBD.
SGPP-SS01C	Subsurface soil sample from a direct-push borehole within the SGPP property for evaluation of background conditions. Depth: TBD.
SGPP-SS01D	Subsurface soil sample from a direct-push borehole within the SGPP property for evaluation of background conditions. Depth: TBD.
SGPP-S02	Surface soil sample from a direct-push borehole within the SGPP property for evaluation of background conditions. Depth: TBD.
SGPP-SS02A	Subsurface soil sample from a direct-push borehole within the SGPP property for evaluation of background conditions. Depth: TBD.
SGPP-SS02B	Subsurface soil sample from a direct-push borehole within the SGPP property for evaluation of background conditions. Depth: TBD.
SGPP-SS02C	Subsurface soil sample from a direct-push borehole within the SGPP property for evaluation of background conditions. Depth: TBD.
SGPP-SS02D	Subsurface soil sample from a direct-push borehole within the SGPP property for evaluation of background conditions. Depth: TBD.
SGPP-S03	Surface soil sample from a direct-push borehole within the SGPP property for source characterization. Depth: TBD.
SGPP-SS03A	Subsurface soil sample from a direct-push borehole within the SGPP property for source characterization. Depth: TBD.
SGPP-SS03B	Subsurface soil sample from a direct-push borehole within the SGPP property for source characterization. Depth: TBD.
SGPP-SS03C	Subsurface soil sample from a direct-push borehole within the SGPP property for source characterization. Depth: TBD.
SGPP-SS03D	Subsurface soil sample from a direct-push borehole within the SGPP property for source characterization. Depth: TBD.
SGPP-SS03E	Subsurface soil sample from a direct-push borehole within the SGPP property for source characterization. Depth: TBD.
SGPP-SS03F	Subsurface soil sample from a direct-push borehole within the SGPP property for source characterization. Depth: TBD.
SGPP-S04	Surface soil sample from a direct-push borehole within the SGPP property for source characterization. Depth: TBD.
SGPP-SS04A	Subsurface soil sample from a direct-push borehole within the SGPP property for source characterization. MS/MSD for QA/QC purposes. Depth: TBD.
SGPP-SS04B	Subsurface soil sample from a direct-push borehole within the SGPP property for source characterization. Depth: TBD.
SGPP-SS04C	Subsurface soil sample from a direct-push borehole within the SGPP property for source characterization. Depth: TBD.
SGPP-SS04D	Subsurface soil sample from a direct-push borehole within the SGPP property for source characterization. Depth: TBD.
SGPP-SS04E	Subsurface soil sample from a direct-push borehole within the SGPP property for source characterization. Depth: TBD.
SGPP-SS04F	Subsurface soil sample from a direct-push borehole within the SGPP property for source characterization. Depth: TBD.

TABLE 3 (Continued)
SAMPLE DESCRIPTIONS/RATIONALE
SAINT-GOBAIN PERFORMANCE PLASTICS, VILLAGE OF HOOSICK FALLS, NY

SAMPLE NUMBER	DESCRIPTION/RATIONALE
SGPP-S05	Surface soil sample from a direct-push borehole within the SGPP property for source characterization. Depth: TBD.
SGPP-SS05A	Subsurface soil sample from a direct-push borehole within the SGPP property for source characterization. Depth: TBD.
SGPP-SS05B	Subsurface soil sample from a direct-push borehole within the SGPP property for source characterization. Depth: TBD.
SGPP-SS05C	Subsurface soil sample from a direct-push borehole within the SGPP property for source characterization. Depth: TBD.
SGPP-SS05D	Subsurface soil sample from a direct-push borehole within the SGPP property for source characterization. Depth: TBD.
SGPP-SS05E	Subsurface soil sample from a direct-push borehole within the SGPP property for source characterization. Depth: TBD.
SGPP-SS05F	Subsurface soil sample from a direct-push borehole within the SGPP property for source characterization. Depth: TBD.
SGPP-S06	Surface soil sample from a direct-push borehole within the SGPP property for source characterization. Depth: TBD.
SGPP-SS06A	Subsurface soil sample from a direct-push borehole within the SGPP property for source characterization. Depth: TBD.
SGPP-SS06B	Subsurface soil sample from a direct-push borehole within the SGPP property for source characterization. Depth: TBD.
SGPP-SS06C	Subsurface soil sample from a direct-push borehole within the SGPP property for source characterization. Depth: TBD.
SGPP-SS06D	Subsurface soil sample from a direct-push borehole within the SGPP property for source characterization. Depth: TBD.
SGPP-SS06E	Subsurface soil sample from a direct-push borehole within the SGPP property for source characterization. Depth: TBD.
SGPP-SS06F	Subsurface soil sample from a direct-push borehole within the SGPP property for source characterization. Depth: TBD.
SGPP-S07	Surface soil sample from a direct-push borehole within the SGPP property for source characterization. Depth: TBD.
SGPP-SS07A	Subsurface soil sample from a direct-push borehole within the SGPP property for source characterization. Depth: TBD.
SGPP-SS07B	Subsurface soil sample from a direct-push borehole within the SGPP property for source characterization. Depth: TBD.
SGPP-S08	Surface soil sample from a direct-push borehole within the SGPP property for source characterization. Depth: TBD.
SGPP-SS08A	Subsurface soil sample from a direct-push borehole within the SGPP property for source characterization. Depth: TBD.
SGPP-SS08B	Subsurface soil sample from a direct-push borehole within the SGPP property for source characterization. Depth: MS/MSD for QA/QC purposes. TBD.
SGPP-S09	Surface soil sample from a direct-push borehole within the SGPP property for source characterization. Depth: TBD.
SGPP-SS09A	Subsurface soil sample from a direct-push borehole within the SGPP property for source characterization. Depth: TBD.
SGPP-SS09B	Subsurface soil sample from a direct-push borehole within the SGPP property for source characterization. Depth: TBD.
SGPP-S10	Surface soil sample from a direct-push borehole within the SGPP property for source characterization. Depth: TBD.
SGPP-SS10A	Subsurface soil sample from a direct-push borehole within the SGPP property for source characterization. Depth: TBD.

TABLE 3 (Continued)
SAMPLE DESCRIPTIONS/RATIONALE
SAINT-GOBAIN PERFORMANCE PLASTICS, VILLAGE OF HOOSICK FALLS, NY

SAMPLE NUMBER	DESCRIPTION/RATIONALE
SGPP-SS10B	Subsurface soil sample from a direct-push borehole within the SGPP property for source characterization. Depth: TBD.
SGPP-S11	Surface soil sample from a direct-push borehole within the SGPP property for source characterization. Depth: TBD.
SGPP-SS11A	Subsurface soil sample from a direct-push borehole within the SGPP property for source characterization. Depth: TBD.
SGPP-SS11B	Subsurface soil sample from a direct-push borehole within the SGPP property for source characterization. Depth: TBD.
SGPP-SS11C	Subsurface soil sample from a direct-push borehole within the SGPP property for source characterization. Depth: TBD.
SGPP-S12	Surface soil sample from a direct-push borehole within the SGPP property for source characterization. Depth: TBD.
SGPP-SS12A	Subsurface soil sample from a direct-push borehole within the SGPP property for source characterization. Depth: TBD.
SGPP-SS12B	Subsurface soil sample from a direct-push borehole within the SGPP property for source characterization. Depth: TBD.
SGPP-SS12C	Subsurface soil sample from a direct-push borehole within the SGPP property for source characterization. Depth: TBD.
SGPP-S13	Surface soil sample from a direct-push borehole within the SGPP property for source characterization. Depth: TBD.
SGPP-SS13A	Subsurface soil sample from a direct-push borehole within the SGPP property for source characterization. Depth: TBD.
SGPP-SS13B	Subsurface soil sample from a direct-push borehole within the SGPP property for source characterization. Depth: TBD.
SGPP-SS13C	Subsurface soil sample from a direct-push borehole within the SGPP property for source characterization. Depth: TBD.
SGPP-S14	Surface soil sample from a direct-push borehole within the SGPP property for source characterization. Depth: MS/MSD for QA/QC purposes. TBD.
SGPP-SS14A	Subsurface soil sample from a direct-push borehole within the SGPP property for source characterization. Depth: TBD.
SGPP-SS14B	Subsurface soil sample from a direct-push borehole within the SGPP property for source characterization. Depth: TBD.
SGPP-S15	Surface soil sample from a direct-push borehole within the SGPP property for source characterization. Depth: TBD.
SGPP-SS15A	Subsurface soil sample from a direct-push borehole within the SGPP property for source characterization. Depth: TBD.
SGPP-SS15B	Subsurface soil sample from a direct-push borehole within the SGPP property for source characterization. Depth: TBD.
SGPP-S16	Duplicate surface soil sample from a direct-push borehole for QA/QC purposes. Depth: TBD.
SGPP-SS16A	Duplicate subsurface soil sample from a direct-push borehole for QA/QC purposes. Depth: TBD.
SGPP-SS16B	Duplicate subsurface soil sample from a direct-push borehole for QA/QC purposes. Depth: TBD.
SGPP-SS16C	Duplicate subsurface soil sample from a direct-push borehole for QA/QC purposes. Depth: TBD.
ON-SITE MONITORING WELL SAMPLES (LOW–MEDIUM CONCENTRATION)	
SGPP-MW01S	Ground water sample from on-site monitoring well MW-1S for evaluation of observed release. MS/MSD for QA/QC purposes.
SGPP-MW01D	Ground water sample from on-site monitoring well MW-1 for evaluation of observed release.
SGPP-MW02S	Ground water sample from on-site monitoring well MW-2S for evaluation of observed release.
SGPP-MW02D	Ground water sample from on-site monitoring well MW-2 for evaluation of observed release.
SGPP-MW03	Ground water sample from on-site monitoring well MW-3 for evaluation of observed release.
SGPP-MW04	Ground water sample from on-site monitoring well MW-4 for evaluation of observed release.

ED_001670_00012770-00082

TABLE 3 (Continued)
SAMPLE DESCRIPTIONS/RATIONALE
SAINT-GOBAIN PERFORMANCE PLASTICS, VILLAGE OF HOOSICK FALLS, NY

SAMPLE NUMBER	DESCRIPTION/RATIONALE
SGPP-MW05	Ground water sample from on-site monitoring well MW-5 for evaluation of observed release.
SGPP-MW06	Duplicate ground water sample from an on-site monitoring well for QA/QC purposes.
EPA MONITORING WELL SAMPLES (LOW–MEDIUM CONCENTRATION)	
SGPP-EPA-GW01	Groundwater sample from EPA monitoring well MW-1for evaluation of observed release.
SGPP-EPA-GW02	Groundwater sample from EPA monitoring well MW-2for evaluation of observed release.
SGPP-EPA-GW03	Groundwater sample from EPA monitoring well MW-3for evaluation of observed release.
SGPP-EPA-GW04	Groundwater sample from EPA monitoring well MW-4for evaluation of observed release.
SGPP-EPA-GW05	Groundwater sample from EPA monitoring well MW-5for evaluation of observed release.
SGPP-EPA-GW06	Groundwater sample from EPA monitoring well MW-6for evaluation of observed release.
SGPP-EPA-GW07	Groundwater sample from EPA monitoring well MW-7for evaluation of observed release.
SGPP-EPA-GW08	Duplicate ground water sample from an EPA monitoring well for QA/QC purposes.
POTABLE WELL SAMPLES (TRACE CONCENTRATION)	
SGPP-DW01	Ground water sample from Village of Hoosick Falls Well No. 3 for evaluation of actual contamination of a drinking water well. MS/MSD for QA/QC purposes.
SGPP-DW02	Ground water sample from Village of Hoosick Falls Well No. 6 for evaluation of actual contamination of a drinking water well.
SGPP-DW03	Ground water sample from Village of Hoosick Falls Well No. 7 for evaluation of actual contamination of a drinking water well.
SGPP-DW04	Duplicate ground water sample from Village of Hoosick Falls Well No. 7 for QA/QC purposes.
SGPP-DW05	Ground water sample from a potable well believed to be outside of the influence of the site for evaluation of background conditions.
SGPP-DW06	Ground water sample from a potable well believed to be outside of the influence of the site for evaluation of background conditions.
SGPP-DW07	Ground water sample from a potable well believed to be outside of the influence of the site for evaluation of background conditions.
SGPP-DW08	Ground water sample from a potable well believed to be outside of the influence of the site for evaluation of background conditions.
OBSERVATION AND TEST WELL SAMPLES (LOW–MEDIUM CONCENTRATION)	
SGPP-OW01	Ground water sample from a U.S. Geological Survey (USGS) observation well north of the SGPP facility for evaluation of observed release.
SGPP-OW02	Ground water sample from Village of Hoosick Falls test well for evaluation of observed release. MS/MSD for QA/QC purposes.
WASTE WATER SAMPLES (LOW–MEDIUM CONCENTRATION)	
SGPP-WW01	Wastewater sample from Manhole #1 for source characterization.
SGPP-WW02	Wastewater sample from the SGPP facility sewage ejector pit for source characterization.
SGPP-WW03	Wastewater sample from a storm water manhole southeast of the SGPP facility.
SGPP-WW04	Wastewater sample from a storm water manhole northwest corner of the SGPP facility.
QA/QC SAMPLES	
RINSATE BLANKS (LOW–MEDIUM CONCENTRATION)	
SGPP-RIN01	Rinsate blank (direct-push cutting shoe) Day 1 of direct-push soil sampling for QA/QC purposes.
SGPP-RIN02	Rinsate blank (direct-push cutting shoe) Day 2 of direct-push soil sampling for QA/QC purposes.
SGPP-RIN03	Rinsate blank (direct-push cutting shoe) Day 3 of direct-push soil sampling for QA/QC purposes.
SGPP-RIN04	Rinstate blank (submersible pump) Day 1 of on-site monitoring well sampling for QA/QC purposes.
SGPP-RIN05	Rinstate blank (submersible pump) Day 2 of on-site monitoring well sampling for QA/QC purposes.
SGPP-RIN06	Rinstate blank (submersible pump) Day 3 of on-site monitoring well sampling for QA/QC purposes.
SGPP-RIN07	Rinstate blank (submersible pump) Day 1 of EPA monitoring well sampling for QA/QC purposes.
SGPP-RIN08	Rinstate blank (submersible pump) Day 2 of EPA monitoring well sampling for QA/QC purposes.
SGPP-RIN09	Rinstate blank (submersible pump) Day 3 of EPA monitoring well sampling for QA/QC purposes.
SGPP-RIN10	Rinstate blank (submersible pump) Day 4 of EPA monitoring well sampling for QA/QC purposes.

TABLE 3 (Continued)
SAMPLE DESCRIPTIONS/RATIONALE
SAINT-GOBAIN PERFORMANCE PLASTICS, VILLAGE OF HOOSICK FALLS, NY

SAMPLE NUMBER	DESCRIPTION/RATIONALE
TRIP BLANKS (TRACE CONCENTRATION)	
SGPP-TB01	Trip blank Day 1 of environmental aqueous sampling for QA/QC purposes.
SGPP-TB02	Trip blank Day 2 of environmental aqueous sampling for QA/QC purposes.
SGPP-TB03	Trip blank Day 3 of environmental aqueous sampling for QA/QC purposes.
SGPP-TB04	Trip blank Day 4 of environmental aqueous sampling for QA/QC purposes.
SGPP-TB05	Trip blank Day 5 of environmental aqueous sampling for QA/QC purposes.
SGPP-TB06	Trip blank Day 6 of environmental aqueous sampling for QA/QC purposes.
SGPP-TB07	Trip blank Day 7 of environmental aqueous sampling for QA/QC purposes.
SGPP-TB08	Trip blank Day 8 of environmental aqueous sampling for QA/QC purposes.
SGPP-TB09	Trip blank Day 9 of environmental aqueous sampling for QA/QC purposes.
SGPP-TB10	Trip blank Day 10 of environmental aqueous sampling for QA/QC purposes.
DECONTAMINATION WATER BLANK (LOW CONCENTRATION)	
SGPP-DB01	Decontamination water blank first day of sampling for QA/QC purposes.

* The number of soil samples per borehole is estimated based on the depth to water in the nearest monitoring well.

Note:
1. Background potable well locations will be determined in the field.

Source:
1. High Resolution Orthoimagery. United States Geological Survey. Acquisition Date: April 20, 2014. Acquired data: January 13, 2016. https://lta.cr.usgs.gov/high_res_ortho.
2. Surficial Geology data: NYS Museum / NYS Geological Survey.

PROJECT: Saint-Gobain Performance Plastics

CLIENT NAME: USEPA

TITLE:

Saint-Gobain Performance Plastics Proposed Monitoring Well and Public Supply Well Sample Location Map

WESTON SOLUTIONS

DRAWING NUMBER: March 2016

FIGURE #: 1

DRAWN BY: P. DiTillio

REVIEWED BY: S. Snyder

PROJECT MANAGER: S. Snyder

SCALE: 1" = 600'

DATE: 3/31/2016

UNITED STATES ENVIRONMENTAL PROTECTION AGENCY

P:\SAT2\Saint-Gobain Performance Plastics\MXD\17669_SGPP_Surficial_Geology_MWs_Locations.mxd

Document Path: P:\SAT2\Saint-Gobain Performance Plastics\MXD\17793_SGPP_Background_Drinking_Water_Sampl_Loc.mxd

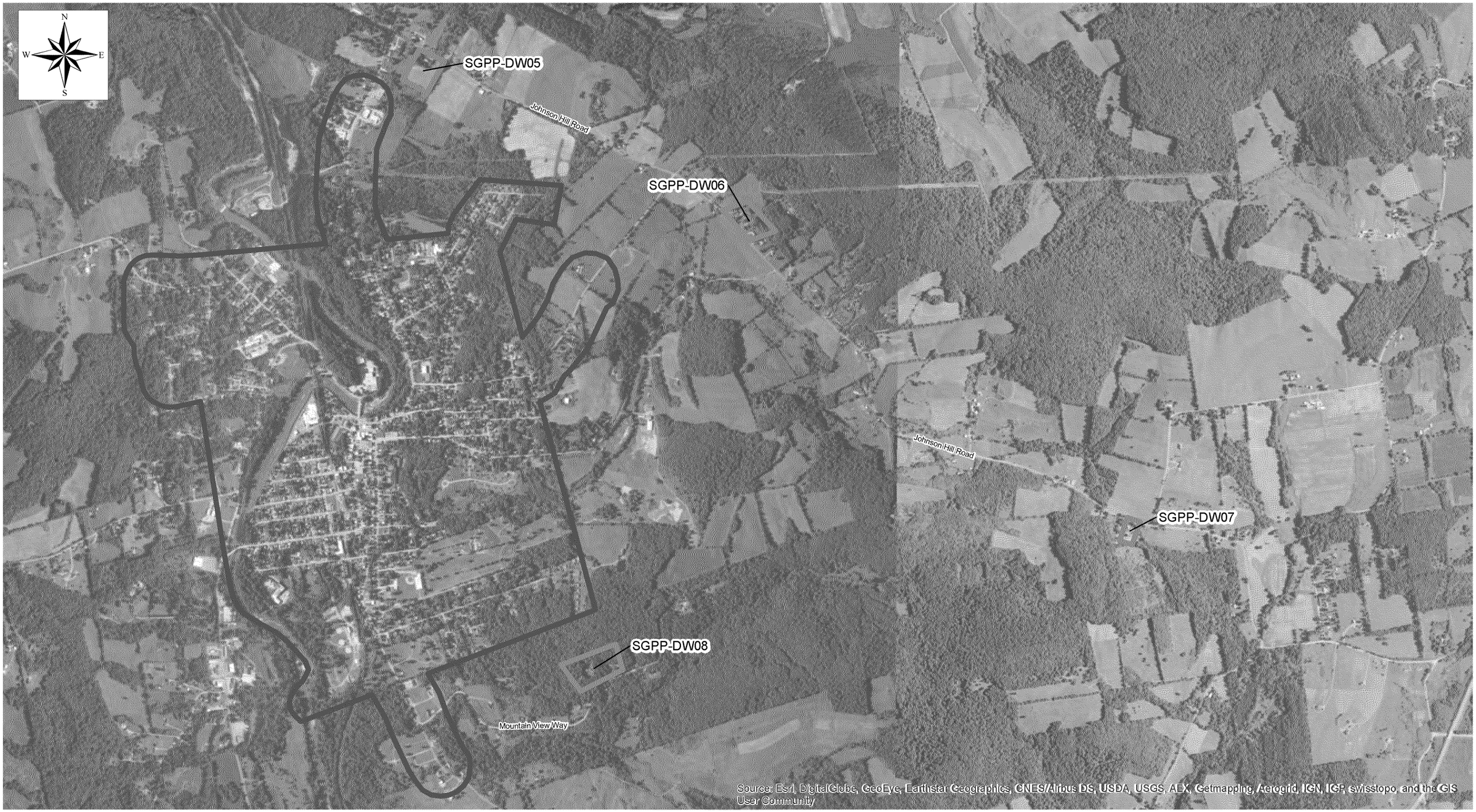

Source:
1. Weston Solutions, Inc., Region 8 START IV, Site Assessment Team. Saint-Gobain Performance Plastics Site Logbook W0311.3B.0098. March 29-30, 2016.

1,600 800 0 1,600 Feet

LEGEND:

Drinking Water Sample Location

Municipal Water Supply System Boundary

PROJECT: Saint-Gobain Performance Plastics

CLIENT NAME: USEPA

TITLE:

Saint-Gobain Performance Plastics Proposed Background Drinking Water Sample Location Map

DATE: 3/31/2016

FIGURE #: 2

Document Path: P:\SAT2\Saint-Gobain Performance Plastics\MXD\17697_SGPP_Proposed_Sample_Loc.mxd

Source:
1. High Resolution Orthoimagery. United States Geological Survey. Acquisition Date: April 20, 2014. Acquired data: January 13, 2016. https://lta.cr.usgs.gov/high_res_ortho
2. Ramboll Environ. Saint-Gobain Performance Plastics, McCaffrey Street Facility, Hoosick Falls, NY, Site Sampling Results. February 4, 2016.

LEGEND:
- Proposed Direct-push Boring Location
- Wastewater Sample Location (Shown Locations Appoximate)
- Monitoring well
- Monitoring Well in Perched Zone

PROJECT: Saint-Gobain Performance Plastics HRS

CLIENT NAME: USEPA

TITLE:

Saint-Gobain Performance Plastics
Proposed On-Site Sample Location Map

WESTON SOLUTIONS

DRAWING NUMBER: 17697

FIGURE #: 3

DRAWN BY: P. DiTillio

REVIEWED BY: S. Snyder

PROJECT MANAGER: S. Snyder

SCALE: 1" = 80'

DATE: March 2016

UNITED STATES ENVIRONMENTAL PROTECTION AGENCY

ATTACHMENT 2: Sampling and PFC Analytical SOPs

ASTM Standard D 6418-04: Standard Practice for Using the Disposable En Core Sampler for Sampling and Storing Soil for Volatile Organic Analysis

EPA Environmental Response Team (ERT), SOPs 2044: Monitor Well Development; and 2048: Monitor Well Installation

EPA Region 2 Division of Environmental Science & Assessment (DESA), Monitoring & Assessment Branch (MAB), SOPs for Field Activities: Section 5 – Sampling Design and Quality Assurance Procedures Section 6 – Ground Water Sampling; Section 7 – Sampling of Potable Water Supplies; and Section 14 – Soil Sampling

EPA Region 4 Science and Ecosystem Support Division (SESD), SOP No. SESDPROC-306-R3, Wastewater Sampling

ALS Standard Operating Procedure *Perfluorinated Compounds by High Performance Liquid Chromatography/Tandem Mass Spectrometry (HPLC/MS/MS)*

ALS, Specific Conductance, µMHOS at 25 °C, 04-SPC, Revision 10

Designation: D 6418 – 04

Standard Practice for Using the Disposable En Core Sampler for Sampling and Storing Soil for Volatile Organic Analysis[1]

This standard is issued under the fixed designation D 6418; the number immediately following the designation indicates the year of original adoption or, in the case of revision, the year of last revision. A number in parentheses indicates the year of last reapproval. A superscript epsilon (ϵ) indicates an editorial change since the last revision or reapproval.

1. Scope

1.1 This practice is intended for application to soils that may contain volatile waste constituents.

1.2 This practice provides a procedure for using the disposable En Core[2] sampler to collect and store a soil sample for volatile organic analysis.

1.3 It is recommended that this standard be used in conjunction with Guide D 4547 and Guide D 4687.

1.4 *This standard does not purport to address all of the safety concerns, if any, associated with its use. It is the responsibility of the user of this standard to establish appropriate safety and health practices and determine the applicability of regulatory limitations prior to use.*

NOTE 1—ASTM takes no position respecting the validity of any patent rights asserted in connection with any item mentioned in this standard. Users of this standard are expressly advised that determination of the validity of any such patent rights, and the risk of infringement of such rights, are entirely their own responsibility.

2. Referenced Documents

2.1 *ASTM Standards:* [3]

D 2777 Practice for Determination of Precision and Bias of Applicable Methods of Committee D-19 on Water

D 4547 Guide for Sampling Waste and Soils for Volatile Organics

D 4687 Guide for General Planning of Waste Sampling

D 5792 Practice for Generation of Environmental Data Related to Waste Management Activities: Development of Data Quality Objectives

3. Summary of Practice

3.1 This practice provides a procedure for using the disposable En Core sampler to collect and store a soil sample of approximately 5 or 25 g for volatile organic analysis. The En Core sampler, which consists of a coring body/storage chamber, O-ring sealed plunger, and O-ring sealed cap, is designed to collect and hold a soil sample during shipment to the laboratory for analysis.

3.2 After the sample is collected in the En Core sampler, the coring body/storage chamber is sealed with a slide-on cap and immediately becomes a sample storage chamber. To minimize loss of volatile compounds due to volatilization, or biodegradation, or both, from the time of collection until analysis or chemical preservation in the laboratory (see Guide D 4547), sample storage options are specified at 4 ± 2°C for up to 48 h; at –7 to –21°C for up to 14 days; or at 4 ± 2°C for up to 48 h followed by storage at –7 to –21°C for up to five days (see Appendix X1 and reports referenced in footnotes 4, 5, and 6 for information on the performance of the En Core sampler under these storage conditions).[4,5,6] Storage of samples in the En Core sampler at 4 ± 2°C or –7 to –21°C for longer holding times than those listed above is an option, provided it can be shown that the longer storage time used does not influence the concentrations of the volatile organic compounds (VOCs) of interest in the samples, or that the data generated by analysis of the samples meet the data quality objectives (DQOs) (see Practice D 5792). This practice does not use methanol preservation or other chemical preservatives in the field.

4. Significance and Use

4.1 This practice is for use in collecting and storing 5- or 25-g soil samples for volatile organic analysis in a manner that minimizes loss of contaminants due to volatilization, or biodegradation, or both. The En Core sampler serves as both the sampling device and sample storage chamber.

[1] This practice is under the jurisdiction of ASTM Committee D34 on Waste Management and is the direct responsibility of Subcommittee D34.01.03 on Sampling Equipment.

Current edition approved Feb. 1, 2004. Published April 2004. Originally approved in 1999 as D 6418 – 99. Last previous edition approved in 2003 as D 6418 – 03.

[2] En Core is a registered trademark of En Novative Technologies, Inc., Green Bay, WI. The En Core sampler is covered by a patent. Interested parties are invited to submit information regarding the identification of an alternative(s) to this patented item to the ASTM Headquarters. Your comments will receive careful consideration at a meeting of the responsible technical committee, which you may attend.

[3] For referenced ASTM standards, visit the ASTM website, www.astm.org, or contact ASTM Customer Service at service@astm.org. For *Annual Book of ASTM Standards* volume information, refer to the standard's Document Summary page on the ASTM website.

[4] Hewitt, A. D., Frozen Storage of Soil Samples for Volatile Organic Compound Analysis, *Environmental Testing and Analysis*, Vol 8, No. 5, 1999, pp. 18–25.

[5] A copy of the research report describing the study performed to evaluate the precision of the En Core sampler to store low VOC concentrations is available from ASTM Headquarters. Request RR: D34–1014.

[6] A copy of the research report describing the study performed to evaluate the performance of the En Core sampler at –7 ± 1°C and –21 ± 2°C is available from ASTM Headquarters. Request RR: D34-1015.

Copyright ©ASTM International, 100 Barr Harbor Drive, PO Box C700, West Conshohocken, PA 19428-2959, United States.

Copyright by ASTM Int'l (all rights reserved); Fri Mar 30 11:42:12 EST 2007
Downloaded/printed by
Gerald V Gilliland (Weston Solutions, Inc.) pursuant to License Agreement. No further reproductions authorized.
ED_001670_00012770-00089

4.2 In performing the practice, the integrity of the soil sample structure is maintained during sample collection, storage, and transfer in the laboratory for analysis or preservation.

4.3 During sample collection, storage, and transfer, there is very limited exposure of the sample to the atmosphere.

4.4 Laboratory subsampling is not required when performing this practice. The sample is expelled directly from the coring body/storage chamber into the appropriate container for analysis or preservation without disrupting the integrity of the sample. Subsampling from the En Core device should not be performed to obtain smaller sample sizes for analysis.

4.5 This practice specifies sample storage in the En Core sampler at 4 ± 2°C for up to 48 h; at –7 to –21°C for up to 14 days; or at 4 ± 2°C for up to 48 h followed by storage at –7 to –21°C for up to five days (see Appendix X1 and reports referenced in footnotes 4, 5, and 6 for information on the performance of the En Core sampler under these storage conditions).[4,5,6] Storage of samples in the En Core sampler at 4 ± 2°C or –7 to –21°C for longer holding times than those listed above is an option, provided it can be shown that the longer storage time used does not influence the concentrations of the VOCs of interest in the samples, or that the data generated by analysis of the samples meet the DQOs (see Practice D 5792).

4.6 This practice does not use methanol preservation or other chemical preservatives in the field. As a result, there are no problems associated with flammability hazards, shipping restrictions, or dilution of samples containing low volatile concentrations due to solvents being added to samples in the field.

4.7 The En Core sampler is a single-use device. It should not be cleaned, or reused, or both.

4.8 This practice cannot be used for sampling cemented material, consolidated material, or material having fragments coarse enough to interfere with proper coring techniques.

5. Apparatus

5.1 *En Core Sampler*—The En Core sampler has three components: the coring body/storage chamber, which is volumetrically designed to collect and store a soil sample of approximately 5 or 25 g; an O-ring sealed plunger for nondisruptive extrusion of the sample into an appropriate container for analysis or preservation; and, a slide-on cap having an O-ring seal and locking arm mechanism (see Fig. 1). The coring body/storage chamber of the 5-g sampler has a volume of 3 cm^3 to give a sample size of approximately 5 g, assuming a soil density of 1.7 g/cm^3. The coring body/storage chamber of the 25-g sampler has a volume of 14.5 cm^3 to give a sample size of approximately 25 g, assuming a soil density of 1.7 g/cm^3. The seals of the sampler are provided by three polytetrafluoroethylene-coated fluoroelastomer O-rings (see Fig. 1). The coring body/storage chamber, plunger, and cap of the En Core sampler are constructed of an inert composite polymer. The En Core sampler is certified as clean and should

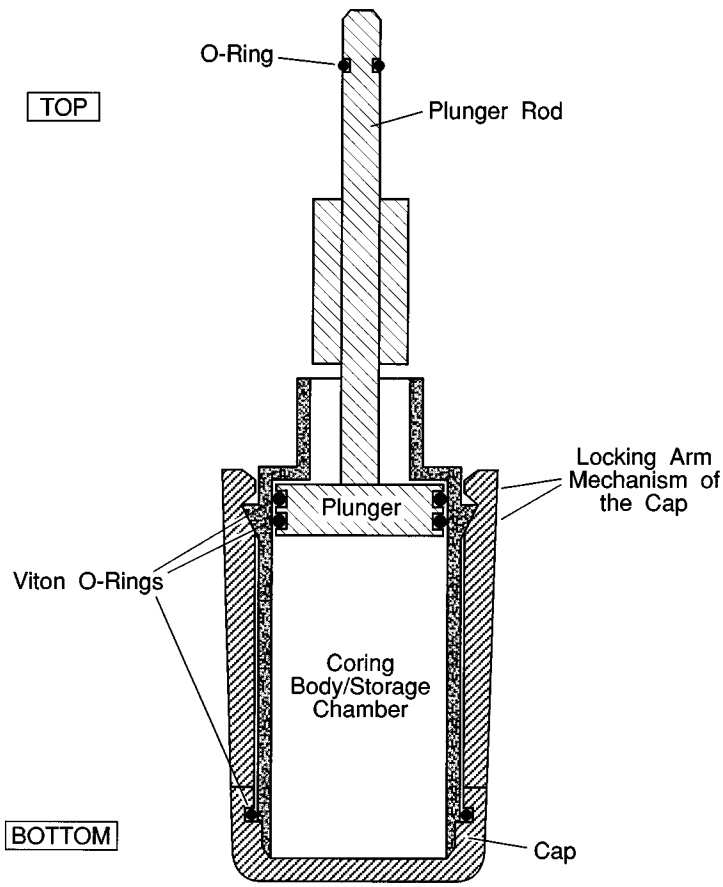

FIG. 1 Components of the En Core Sampler

Copyright by ASTM Int'l (all rights reserved); Fri Mar 30 11:42:12 EST 2007
Downloaded/printed by
Gerald V Gilliland (Weston Solutions, Inc.) pursuant to License Agreement. No further reproductions authorized.

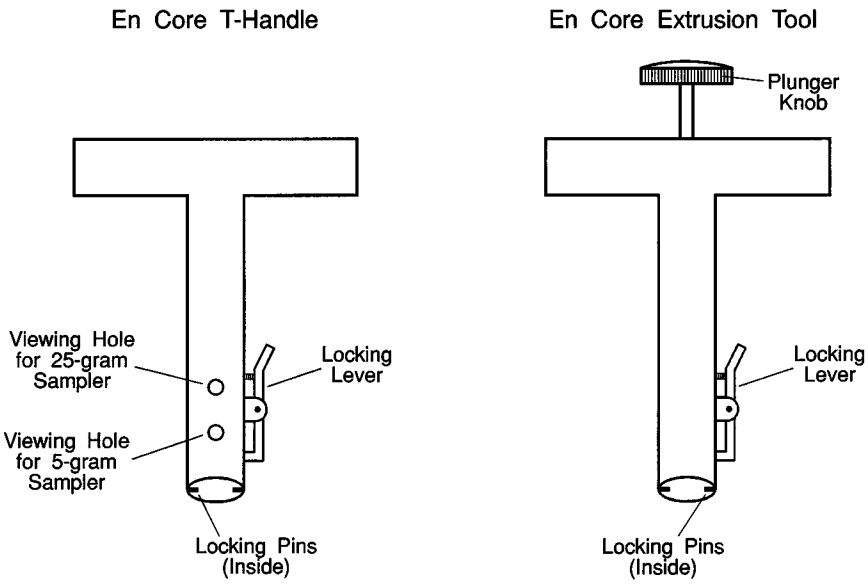

FIG. 2 Reusable Attachments to the En Core Sampler

not be reused. There are two stainless steel reusable attachments that are used with the En Core sampler. These are a T-handle, which is used to push the sampler into the soil for sample collection; and an extrusion tool, which attaches to the plunger for extrusion of the sample from the coring body/storage chamber (see Fig. 2). Each En Core sampler is supplied with a protective moisture-proof bag for shipment to the laboratory.

5.2 Cooler with ice or cold packs, or refrigerated compartment regulated at 4 ± 2°C and/or a freezer compartment regulated at a temperature within the range of –7 to –21°C.

5.3 *Minimum/Maximum Temperature Monitor*—This is any device that registers the minimum and maximum temperatures reached during a given period of time in °C and has a range that includes the specified storage temperature in divisions of 1°C, such as a minimum/maximum thermometer or temperature data logger.

6. Procedure

6.1 The size of the En Core sampler used is determined by the size of the sample required by the laboratory procedure that will be used to analyze the sample. If a sample size of approximately 5 g is required for analysis, the 5-g En Core sampler, and not the 25-g device, should be used to collect and store the sample. Subsampling from the En Core devices should not be performed to obtain smaller sample sizes for analysis.

6.2 If volatile contaminant levels in the soil being sampled are not known, it is recommended that three samples be collected at each sampling location using three En Core samplers. If determination of moisture content is required for reporting sample results on a dry weight basis, a fourth sample should be collected from each sampling location using a suitable container. The proper sample preparation method for low-level or high-level volatile analysis[7,8] can be determined by screening one of the three samples collected in the En Core samplers for high or low concentrations of VOCs. If a high concentration is present, one of the remaining samples in the En Core devices can be extruded into methanol for high-level analysis; if a low concentration is present, the two remaining samples in the En Core devices can be extruded into two appropriate vials for low-level analysis giving an additional low-level sample for analysis, if needed. For guidance on sample collection, sample handling, and sample preparation methods for volatile organic analysis, see Guide D 4547. For quality assurance considerations related to field sampling, see Guide D 4687.

6.3 As stated in 4.8, the En Core device cannot be used for sampling cemented material, consolidated material, or material having fragments coarse enough to interfere with proper coring techniques.

6.4 *Sample Collection*—The manufacturer's specific instructions for operating the En Core sampler and T-handle to collect a soil sample should be followed. The steps involved in sample collection using the En Core sampler are given below.

6.4.1 Before collecting a sample in the En Core sampler, the plunger rod (see Fig. 1) should be positioned so that the plunger can be moved freely from the top to the bottom of the coring body/storage chamber. For sample collection, the T-handle (see Fig. 2) should be attached to the sampler, and the plunger should be positioned so that the bottom of the plunger

[7] U.S. EPA, 1996, Method 5035: Closed-System Purge-and-Trap and Extraction for Volatile Organics in Soil and Waste Samples. *Test Methods for Evaluating Solid Waste: Physical/Chemical Methods (SW-846)*, Vol 1B, Final Update III.

[8] U.S. EPA, 1996, Method 5021: Volatile Organic Compounds in Soils and Other Solid Matrices Using Equilibrium Headspace Analysis. *Test Methods for Evaluating Solid Waste: Physical/Chemical Methods (SW-846)*, Vol 1B, Final Update III.

Copyright by ASTM Int'l (all rights reserved); Fri Mar 30 11:42:12 EST 2007
Downloaded/printed by
Gerald V Gilliland (Weston Solutions, Inc.) pursuant to License Agreement. No further reproductions authorized.

is flush with the bottom of the coring body/storage chamber. This prevents air from being trapped in the device during sample collection. When inserting a coring device into a surface for sample collection, air should not be trapped behind the sample. If this occurs, air can pass through the soil causing VOCs to be lost, or it can cause the sample to be prematurely pushed from the coring device.

6.4.2 Sample collection should be performed as quickly as possible. Using the T-handle, push the En Core sampler into the soil until the coring body/storage chamber is completely full. It can be verified that the coring body/storage chamber is full by looking into the appropriate viewing hole (either 5 or 25-g) in the T-handle (see Fig. 2). The coring body/storage chamber is completely full if the small O-ring on the plunger rod (see Fig. 1) is centered in the T-handle viewing hole. If possible, look at the viewing hole while the device is in the soil to check if the coring body/storage chamber is completely full. If it is not possible to view the hole when the device is in the soil, remove the sampler from the soil to view the hole. If the coring body/storage chamber is not completely full, quickly insert the device back into the same sampling spot and push harder to fill the coring body/storage chamber. When the coring body/storage chamber is completely full, scrape a spatula across the bottom of the coring body/storage chamber so the surface of the soil in the sampler is flush with the opening of the coring body/storage chamber (see Note 2). Quickly wipe the external surface of the coring body/storage chamber with a clean tissue or cloth. After ensuring that the sealing surfaces are clean, cap the coring body/storage chamber while it is still on the T-handle. This is done by gently sliding the cap onto the coring body/storage chamber with a twisting motion. The cap is locked into position when the grooves on the locking arms seat over the ridge on the coring body/storage chamber (see Fig. 1). If the cap of the En Core sampler is difficult to lock into position, the O-ring in the cap (see Fig. 1) may be bent out of position, and a new cap should be used to seal the device. A bent O-ring in the cap may result in loss of VOCs from the stored sample (see 8.2.2). After the cap is locked into position, the T-handle is removed from the sampler, and the plunger is locked into position by rotating the plunger rod (see manufacturer's specific operating instructions).

NOTE 2—For drier soils that are difficult to compact in the sampler, scraping a spatula across the surface of the soil to make it flush with the opening of the coring body/storage chamber may loosen particles of the soil in the coring body/storage chamber. These particles may scatter when the device is capped and may affect the seal between the cap and coring body/storage chamber (see 8.2.2). Caution should be used when working with these types of soils to prevent this from happening.

6.4.3 A sample label showing the sample number is attached to the cap of the En Core sampler, and the sampler is placed in its protective moisture-proof shipping bag (provided with each En Core sampler). This bag has a label attached for recording sample name, date collected, comments, and sample number.

6.5 *Sample Storage*—The capped coring body immediately becomes a sealed sample storage chamber. A sample can be stored in the sealed coring body/storage chamber at 4 ± 2°C for up to 48 h; at –7 to –21°C for up to 14 days; or at 4 ± 2°C for up to 48 h followed by storage at –7 to –21°C for up to five days (see Appendix X1 and reports referenced in footnotes 4, 5, and 6 for information on the performance of the En Core sampler under these storage conditions).[4,5,6] Storage of samples in the En Core sampler at 4 ± 2°C or –7 to –21°C for longer holding times than those listed above is an option, provided it can be shown that the longer storage time used does not influence the concentrations of the VOCs of interest in the samples, or that the data generated by analysis of the samples meet the DQOs (see Practice D 5792). Data showing performance of the En Core sampler as a storage chamber for samples of soil stored under a variety of conditions, including 4 ± 2°C for 48 h; –7 ± 1°C for 14 days; –12 ± 2°C for 14 days; –21 ± 2°C for 14 days; 4 ± 2°C for 48 h followed by storage at –7 ± 1°C for five days; 4 ± 2°C for 48 h followed by storage at –12 ± 2°C for five days; and 4 ± 2°C for 48 h followed by storage at –21 ± 2°C for five days, are given in Appendix X1.

6.5.1 Storage of samples at 4 ± 2°C can be achieved by placing the protective shipping bag, in which the En Core sampler has been placed, in a cooler with ice or cold packs, or in a refrigerated compartment regulated at 4 ± 2°C. For storage at –7 to –21°C, the En Core sampler should be stored in a freezer compartment regulated at a temperature within the range of –7 to –21°C. A minimum/maximum temperature monitor, such as a minimum/maximum thermometer or temperature data logger should be placed with the samples during storage to verify that the temperature requirement is maintained.

6.6 Arrangements with the receiving laboratory for sample log in, sample handling, required storage conditions, and analysis should be made.

6.7 *Extrusion of the Soil Sample from the En Core Sampler*—The manufacturer's specific instructions for operating the En Core sampler and extrusion tool to extrude the soil sample from the coring body/storage chamber should be followed. The steps involved in sample extrusion from the En Core sampler are outlined in 6.7.1.

6.7.1 At the laboratory, the soil is transferred into the appropriate container without disturbing the integrity of the sample by removing the cap from the coring body/storage chamber and using the plunger to expel the soil into the receiving container (see Note 3). This is done by performing the following steps in accordance with the manufacturer's specific operating instructions: attach the extrusion tool (see Fig. 2) to the En Core sampler; rotate the extrusion tool plunger knob into position for sample extrusion; unlock the locking arms of the cap; carefully remove the cap from the sampler; and, push down on the plunger knob of the extrusion tool (see Fig. 2) to expel the sample from the coring body/storage chamber directly into the appropriate container for analysis or preservation (see Guide D 4547). After the sample is expelled from the En Core sampler, the O-ring in the sampler cap should be inspected to make sure that the O-ring was not bent when the cap was placed on the coring body/storage chamber. A bent

Copyright by ASTM Int'l (all rights reserved); Fri Mar 30 11:42:12 EST 2007
Downloaded/printed by
Gerald V Gilliland (Weston Solutions, Inc.) pursuant to License Agreement. No further reproductions authorized.

O-ring in the sampler cap can result in loss of VOCs from the stored sample and should be documented (see 8.2.2).

NOTE 3—Samples that have been stored at –7 to –21°C should be allowed to sit at room temperature for 2 to 3 min before extrusion from the En Core sampler, which will facilitate extrusion of the frozen sample from the device.

7. Report

7.1 For guidance on information that should be recorded for a sampling activity, see Guide D 4687.

8. Precision and Bias

8.1 *Precision*—The estimated percent relative standard deviations of low-level (<200 µg/Kg) concentrations of methylene chloride ($MeCl_2$), methyl tert-butyl ether (MTBE), 1,1-dichloroethane, cis-1,2-dichloroethylene (CDCE), chloroform, benzene, trichloroethylene (TCE), toluene, tetrachloroethylene (PCE), ethyl benzene, and o-xylene due to storage of spiked samples of two different soils in the 5-g and 25-g En Core samplers have been shown to range from 0 to 10 % for the following conditions: 4 ± 2°C for 48 h; 4 ± 2°C for seven days; –12 ± 2°C for seven days; –12 ± 2°C for 14 days; 4 ± 2°C for 48 h followed by –12 ± 2°C for five days; and 4 ± 2°C for 48 h followed by –12 ± 2°C for twelve days. For storage of samples at 4 ± 2°C for 14 days, these values range from 0 to 14 % for the compounds listed above. For vinyl chloride, the values range from 0 to 14 % for all of the storage conditons.[5]

8.2 *Bias*—No information can be given on the bias of the sampling/storage procedure described in this practice because there is no standard reference material for sampling soil for VOCs in the field.

8.2.1 Data have been generated to provide information on the performance of the En Core sampler for storage of soil samples spiked with VOCs at low-level concentrations of approximately 100 µg/Kg. Performance of the device for storage of the spiked soil at 4 ± 2°C for 48 h, at 4 ± 2°C for seven days, at 4 ± 2°C for 14 days, at –7 ± 1°C for 14 days, at 4 ± 2°C for 48 h followed by storage at -7 ± 1°C for five days, at -12 ± 2°C for seven days, at –12 ± 2°C for 14 days, at 4 ± 2°C for 48 h followed by storage at –12 ± 2°C for five days, at 4 ± 2°C for 48 h followed by storage at -12 ± 2°C for 12 days, at –21 ± 2°C for 14 days, and at 4 ± 2°C for 48 h followed by storage at –21 ± 2°C for five days has been evaluated. Data from these evaluations are shown in Appendix X1.[6,9]

8.2.2 A study involving storage of soil samples spiked with VOCs at high-level concentrations of approximately 2,500 µg/Kg has also been conducted. The data and findings from this study are discussed in research report RR: D34–1012[10].

8.2.3 Data showing the performance of the 25–g disposable En Core sampler to store soil samples spiked with EPA Method 1311[11] volatile organic analytes are shown in Appendix X2.[9] Storage conditions used were 14 days at 4 ± 2°C, 14 days at -12 ± 2°C, and 48 h at 4 ± 2°C followed by 12 days at -12 ± 2°C.

9. Keywords

9.1 En Core sampler; soil sampling; storage of soil samples; volatile organic compounds (VOCs); VOC analysis

[9] Copies of the research reports on the studies described in Appendix X1 are available from ASTM Headquarters. Request RR: D34-1013 and RR: D34-1015. RR: D34-1013 also gives information on the study described in Appendix X2.

[10] A copy of the research report on the study described in 8.2.2 is available from ASTM Headquarters. Request RR:D34-1012.

[11] U.S. EPA, 1992, Method 1311, Toxicity Characteristic Leaching Procedure. *Test Methods for Evaluating Solid Waste: Physical/Chemical Methods (SW-846)*, Vol 1C.

APPENDIXES

(Nonmandatory Information)

X1. PERFORMANCE OF THE EN CORE SAMPLER TO STORE LOW-LEVEL VOC-SPIKED SOIL SAMPLES

X1.1 A study was conducted to evaluate the performance of the 5- and 25-g En Core samplers to store three different soil types spiked with an aqueous solution containing eleven volatile organic compounds (VOCs). The En Core samplers used in this study were manufactured at the end of 1999 and in 2000. The 5-g devices that were used represent lot numbers K119333, K110073, K110167, and K110259. The 25-g devices that were used represent lot numbers K119349, K110053, and K110154. The manufacturer can be contacted for information on these lot numbers.

X1.1.1 The soils used in the study are representative of different environments and contained native microbial populations. They are a river bank soil having 49 % sand, 26 % silt, 24 % clay, 5.3 % organic material, approximately 14 % moisture, and a dehydrogenase (microbial) activity of 22 mg total product formed (TPF)/g/24 h; a mountain soil having 75 % sand, 13 % silt, 12 % clay, 4.3 % organic material, approximately 12 % moisture, and a dehydrogenase activity of 11 mg TPF/g/24 h; and, a prairie soil having 67 % sand, 17 % silt, 16 % clay, 1.5 % organic material, approximately 8 % moisture, and a dehydrogenase activity of 17 mg TPF/g/24 h.

X1.1.2 The VOCs used in the study are methylene chloride ($MeCl_2$), methyl tert-butyl ether (MTBE), 1,1–dichloroethane, *cis*-1,2–dichloroethylene (CDCE), chloroform, benzene, trichloroethylene (TCE), toluene, tetrachloroethylene, (PCE), ethyl benzene, and o-xylene. These compounds were selected as the analytes of interest because they are representative of halogenated and aromatic compounds that are of environmental concern.

X1.1.3 In the study, soil samples were collected in the En Core samplers from a large container of loose soil and then spiked with an aqueous solution containing the compounds

Copyright by ASTM Int'l (all rights reserved); Fri Mar 30 11:42:12 EST 2007
Downloaded/printed by
Gerald V Gilliland (Weston Solutions, Inc.) pursuant to License Agreement. No further reproductions authorized.

TABLE X1.1 Storage Conditions for Low-Level Testing of the Disposable En Core Samplers

Storage Times and Conditions	Number of Samples
No Storage (Time-zero)	5 samples
48 h in a cooler at 4 ± 2°C	5 samples
48 h in a cooler at 4 ± 2°C, then 5 days at 4 ± 2°C in a refrigerator	5 samples
48 h in a cooler at 4 ± 2°C, then 5 days at -12 ± 2°C in a freezer	5 samples
7 days at -12 ± 2°C in a freezer	5 samples
48 h in a cooler at 4 ± 2°C, then 12 days at 4 ± 2°C in a refrigerator	5 samples
48 h in a cooler at 4 ± 2°C, then 12 days at -12 ± 2°C in a freezer	5 samples
14 days at -12 ± 2°C in a freezer	5 samples

listed in X1.1.2. The spiking solution was prepared by adding 250 µL of gasoline to approximately 80 mL of VOC-free water in a 100–mL volumetric flask and diluting to volume. The mixture was stirred for 24 h, and then the gasoline was separated from the water using a separatory funnel. The resulting gasoline-saturated water was added to a 40–mL VOA vial, and a methanol solution containing the compounds of interest, except for benzene and toluene, was injected into the gasoline-saturated water. The benzene and toluene present in the spiking solution came totally from the gasoline-saturated water. The 5–g samples were spiked with 100 µL of spiking solution, and the 25–g samples were spiked with 0.5 mL of the spiking solution to give an approximate concentration of 100 µg/Kg of each analyte of interest in the samples, with the exception of benzene, toluene, and o-xylene. Because of their presence in the gasoline-saturated water, the concentrations of benzene ranged from approximately 70 to 300 µg/Kg and the concentrations of toluene ranged from approximately 300 to 900 µg/Kg in the spiked soil samples. Additional o-xylene and ethyl benzene were also added to the spiking solution by the gasoline-saturated water. This resulted in o-xylene and ethyl benzene concentrations in the spiked soil samples at approximately 200 µg/Kg and approximately 100 µg/Kg, respectively.

X1.1.4 After all samples were spiked and capped, five random samples for each soil type were extruded from each size of En Core sampler into methanol for analysis to give time-zero concentrations of the analytes of interest. The remaining samples were stored under the storage conditions shown in Table X1.1. Storage temperatures were monitored to make sure they were at the specified temperature. The temperatures in the coolers and refrigerator used to store the samples at 4°C and in the freezer used to store the samples at –12°C were monitored using minimum/maximum thermometers. After the samples were held for the appropriate times, they were extruded into methanol for extraction and analysis. The methanol extracts of the samples were analyzed using EPA Method 8260B[12] and 5030B.[13]

X1.1.5 To evaluate the data, the mean concentrations of the analytes of interest in the stored samples were compared to their mean concentrations in the time-zero samples by calculating average percent recovery. Before average percent recovery was calculated, the data sets were evaluated for outlier data points as described in Practice D 2777 and Grubbs.[14]

X1.1.6 The data generated by this testing are specific to the experimental design of the study. The data give information on the performance of the En Core samplers for storing soil samples collected from loose soil, spiked with a gasoline-saturated water solution containing selected analytes of interest, and then stored under specific storage conditions. The data generated by this testing also are specific to the soils used in the study, the analytes of interest, the analyte concentrations, and the storage conditions that were evaluated. For other soil types, analytes, analyte concentrations, and storage conditions, these data may not apply.

X1.1.7 The average percent recoveries of the VOCs of interest from samples of the river bank soil stored in the 5-g En Core samplers are shown in Table X1.2; and the average percent recoveries of the VOCs of interest from samples of the river bank soil stored in the 25-g En Core samplers are shown in Table X1.3. In each of these tables, the percent relative standard deviation of the concentration values in the stored samples is given in parentheses next to the corresponding average percent recovery value. The percent relative standard deviation of the concentration values in the time-zero samples is given in a footnote to each of the tables.

X1.1.7.1 As shown in Table X1.2 for the 5–g sampler, all of the VOCs of interest in this study have average percent recovery values of 90 % or greater for storage of the spiked river bank soil samples at 4 ± 2°C for 48 h, for storage at -12 ± 2°C for seven days, for storage at 4 ± 2°C for 48 h followed by storage at -12 ± 2°C for five days, and for storage at 4 ± 2°C for 48 h followed by storage at -12 ± 2°C for 12 days. The mean of the 44 average percent recovery values listed in Table X1.2 for the analytes of interest for these four storage conditions is 99 % recovery with a standard deviation of 5 % and a percent relative standard deviation of 5 %. For storage at 4 ± 2°C for seven days and at -12 ± 2°C for 14 days, average percent recovery values for all of the VOCs of interest are greater than 90 %, except for $MECl_2$, which has an average percent recovery of 60 % for both storage conditions, and MTBE, which has an average percent recovery of 84 % for storage at -12 ± 2°C for 14 days. For storage at 4 ± 2°C for 14 days, average percent recovery values for the compounds of interest range from 74 % to 85 %, except for $MeCl_2$, which has an average percent recovery value of 48 %.

[12] U.S. EPA, 1996, Method 8260B: Volatile Organic Compounds by Gas Chromatography/Mass Spectrometry (GC/MS). *Test Methods for Evaluating Solid Waste: Physical/Chemical Methods (SW-846)*, Vol 1B, Final Update III.

[13] U.S. EPA, 1996, Method 5030B:Purge-and-Trap for Aqueous Samples. *Test Methods for Evaluating Solid Waste: Physical/Chemical Methods (SW-846)*, Vol 1B, Final Update III.

[14] Grubbs, F. E., "Sample Criteria for Testing Outlying Observations," *Annals of Mathematical Statistics*, Vol 21, March 1950, pp. 27-58.

Copyright by ASTM Int'l (all rights reserved); Fri Mar 30 11:42:12 EST 2007
Downloaded/printed by
Gerald V Gilliland (Weston Solutions, Inc.) pursuant to License Agreement. No further reproductions authorized.

TABLE X1.2 Average Percent Recoveries of Low-Level[A] VOCs from Samples of River Bank Soil[B] Stored in 5-g En Core Samplers

Storage Conditions:	4 ± 2°C/ 48 h	4 ± 2°C/ 7 Days	4 ± 2°C/ 14 Days	–12 ± 2°C/ 7 Days	–12 ± 2°C/ 14 Days	4 ± 2°C 48 h/ –12 ± 2°C 5 Days	4 ± 2°C 48 h/ –12 ± 2°C 12 Days
VOCs							
$MeCl_2$	103[C] (15)[D]	60 (16)	48 (44)	99 (4)	60 (32)	103 (4)	92 (22)
MTBE	105 (3)	109 (8)	81 (18)	104 (3)	84 (9)	93 (5)	90 (12)
1,1–Dichloroethane	107 (3)	99 (6)	78 (24)	102 (3)	96 (10)	92 (5)	98 (5)
CDCE	104 (3)	97 (3)	80 (14)	101 (7)	95 (8)	91 (7)	94 (12)
Chloroform	99 (7)	104 (6)	83 (15)	96 (6)	93 (6)	94 (7)	94 (12)
Benzene	104 (5)	92 (4)	77 (13)	104 (7)	97 (6)	90 (4)	94 (12)
TCE	105 (6)	98 (3)	85 (8)	102 (8)	98 (3)	97 (7)	99 (4)
Toluene	92 (7)	95 (5)	74 (8)	108 (7)	102 (2)	93 (8)	97 (10)
PCE	97 (10)	100 (4)	85 (6)	99 (5)	96 (5)	100 (10)	96 (7)
Ethyl benzene	96 (8)	95 (7)	85 (6)	105 (7)	94 (4)	99 (8)	101 (10)
o-Xylene	99 (7)	94 (6)	79 (6)	103 (7)	97 (3)	98 (7)	100 (8)

[A] Concentrations of the VOCs in the samples were ~100 µg/Kg, except for benzene concentrations ranging from ~70 to ~300 µg/Kg, toluene concentrations ranging from ~300 to ~900 µg/Kg, and o-xylene concentrations at ~200 µg/Kg.
[B] The river bank soil is 49 % sand, 26 % silt, 24 % clay, 5.3 % organic material, and ~14 % moisture.
[C] Average percent recovery is based on mean concentration values determined for five time-zero samples and five stored samples minus outlier data points.
[D] The value in parentheses is the percent relative standard deviation of the concentration values in the stored samples. The percent relative standard deviation of the concentration values in the time-zero samples ranged from 2 to 11 %, except for methylene chloride for which values ranged from 5 to 19 %.

TABLE X1.3 Average Percent Recoveries of Low-Level[A] VOCs from Samples of River Bank Soil[B] Stored in 25-g En Core Samplers

Storage Conditions:	4 ± 2°C/ 48 h	4 ± 2°C/ 7 Days	4 ± 2°C/ 14 Days	–12 ± 2°C/ 7 Days	–12 ± 2°C/ 14 Days	4 ± 2°C 48 h/ –12 ± 2°C 5 Days	4 ± 2°C 48 h/ –12 ± 2°C 12 Days
VOCs							
$MeCl_2$	96[C] (5)[D]	94 (8)	88 (8)	94 (2)	93 (5)	105 (6)	72 (17)
MTBE	97 (6)	108 (6)	102 (5)	104 (10)	83 (2)	108 (4)	74 (12)
1,1–Dichloroethane	98 (3)	102 (6)	95 (3)	103 (3)	104 (2)	102 (3)	83 (10)
CDCE	98 (2)	97 (5)	84 (5)	101 (4)	100 (3)	100 (3)	80 (12)
Chloroform	98 (1)	102 (6)	96 (6)	102 (1)	102 (3)	102 (3)	77 (10)
Benzene	97 (2)	97 (7)	88 (4)	95 (3)	107 (5)	98 (1)	86 (11)
TCE	100 (3)	106 (9)	97 (1)	98 (3)	103 (4)	102 (3)	90 (11)
Toluene	98 (4)	102 (5)	92 (5)	99 (5)	103 (4)	105 (1)	81 (11)
PCE	100 (3)	105 (4)	97 (6)	101 (5)	110 (6)	100 (4)	90 (4)
Ethyl benzene	98 (4)	96 (7)	88 (1)	101 (1)	99 (4)	96 (4)	93 (10)
o-Xylene	99 (2)	96 (7)	92 (3)	101 (1)	99 (4)	98 (3)	88 (11)

[A] Concentrations of the VOCs in the samples were ~100 µg/Kg, except for benzene concentrations ranging from ~70 to ~300 µg/Kg, toluene concentrations ranging from ~300 to ~900 µg/Kg, and o-xylene concentrations at ~200 µg/Kg.
[B] The river bank soil is 49 % sand, 26 % silt, 24 % clay, 5.3 % organic material, and ~14 % moisture.
[C] Average percent recovery is based on mean concentration values determined for five time-zero samples and five stored samples minus outlier data points.
[D] The value in parentheses is the percent relative standard deviation of the concentration values in the stored samples. The percent relative standard deviation of the concentration values in the time-zero samples ranged from 1 to 15 % for all of the tests using the river bank soil in the 25–g devices.

X1.1.7.2 As shown in Table X1.3, for the 25–g sampler, all of the VOCs of interest have average percent recovery values greater than 90 % for storage of the spiked river bank soil samples at 4 ± 2°C for 48 h, for storage at 4 ± 2°C for seven days, for storage at -12 ± 2°C for seven days, and for storage at 4 ± 2°C for 48 h followed by storage at -12 ± 2°C for five days. The mean of the 44 average percent recovery values listed in Table X1.3 for the analytes of interest for these four storage conditions is 100 % recovery with a standard deviation of 4 % and a percent relative standard deviation of 4 %. For storage at -12 ± 2°C for 14 days, the average percent recovery values for all of the analytes are greater than 90 %, except for MTBE, which has an average percent recovery value of 83 %. For storage at 4 ± 2°C for 14 days, the average percent recovery values for all of the analytes are greater than 80 %. As shown in Table X1.3, for storage at 4 ± 2°C for 48 h followed by storage at -12 ± 2°C for 12 days, the average percent recovery values for the analytes of interest are also greater than 80 %, except for $MeCl_2$ at 72 % recovery, MTBE at 74 % recovery, and chloroform at 77 % recovery.

X1.1.8 The average percent recoveries of the VOCs of interest from samples of the mountain soil stored in the 5-g En Core samplers are shown in Table X1.4; and the average percent recoveries of the VOCs of interest from samples of the mountain soil stored in the 25-g En Core samplers are shown in Table X1.5. In each of these tables, the percent relative standard deviation of the concentration values in the stored samples is given in parentheses next to the corresponding average percent recovery value. The percent relative standard deviation of the concentration values in the time-zero samples is given in a footnote to each of the tables.

X1.1.8.1 As shown in Table X1.4 for the En Core sampler, all of the VOCs of interest in this study have average percent recovery values greater than 90 % for storage of the spiked mountain soil samples at -12 ± 2°C for seven days and for storage at 4 ± 2°C for 48 h followed by storage at -12 ± 2°C

Copyright by ASTM Int'l (all rights reserved); Fri Mar 30 11:42:12 EST 2007
Downloaded/printed by
Gerald V Gilliland (Weston Solutions, Inc.) pursuant to License Agreement. No further reproductions authorized.

TABLE X1.4 Average Percent Recoveries of Low-Level[A] VOCs from Samples of Mountain Soil[B] Stored in 5-g En Core Samplers

Storage Conditions:	4 ± 2°C/ 48 h	4 ± 2°C/ 7 Days	4 ± 2°C/ 14 Days	–12 ± 2°C/ 7 Days	–12 ± 2°C/ 14 Days	4 ± 2°C 48 h/ –12 ± 2°C 5 Days	4 ± 2°C 48 h/ –12 ± 2°C 12 Days
VOCs							
$MeCl_2$	108[C] (4)[D]	86 (2)	71 (13)	110 (6)	82 (13)	108 (10)	74 (10)
MTBE	105 (6)	98 (9)	100 (1)	103 (1)	100 (2)	101 (1)	100 (2)
1,1–Dichloroethane	90 (8)	86 (11)	88 (2)	99 (7)	100 (8)	99 (6)	96 (6)
CDCE	87 (6)	75 (3)	77 (3)	97 (5)	99 (8)	92 (6)	91 (7)
Chloroform	87 (5)	85 (2)	76 (0.3)	107 (1)	103 (7)	102 (3)	105 (6)
Benzene	92 (6)	81 (10)	76 (7)	94 (6)	94 (7)	93 (4)	92 (2)
TCE	97 (6)	90 (10)	88 (6)	98 (7)	100 (7)	103 (4)	103 (5)
Toluene	91 (6)	74 (4)	76 (6)	96 (4)	100 (4)	92 (3)	97 (3)
PCE	98 (7)	92 (9)	88 (8)	94 (2)	99 (6)	102 (4)	104 (4)
Ethyl benzene	97 (6)	83 (3)	82 (4)	100 (3)	98 (5)	98 (3)	98 (3)
o-Xylene	98 (4)	92 (11)	84 (3)	102 (3)	102 (6)	103 (3)	99 (3)

[A] Concentrations of the VOCs in the samples were ~100 µg/Kg, except for benzene concentrations ranging from ~70 to ~300 µg/Kg, toluene concentrations ranging from ~300 to ~900 µg/Kg, and o-xylene concentrations at ~200 µg/Kg.

[B] The mountain soil is 75 % sand, 13 % silt, 12 % clay, 4.3 % organic material, and ~12 % moisture.

[C] Average percent recovery is based on mean concentration values determined for five time-zero samples and five stored samples minus outlier data points. Testing was performed 5/2000 through 6/2000.

[D] The value in parentheses is the percent relative standard deviation of the concentration values in the stored samples. The percent relative standard deviation of the concentration values in the time-zero samples ranged from 1 to 9 %, except for methylene chloride, for which the percent relative standard deviation value was 21 % for storage conditions of 4 ± 2°C/48 h, 4 ± 2°C/7 days, 4 ± 2°C 48 h/-12 ± 2°C 5 days, and -12 ± 2°C/7 days; and 8 % for the other storage conditions.

TABLE X1.5 Average Percent Recoveries of Low-Level[A] VOCs from Samples of Mountain Soil[B] Stored in 25-g En Core Samplers

Storage Conditions:	4 ± 2°C/ 48 h	4 ± 2°C/ 7 Days	4 ± 2°C/ 14 Days	–12 ± 2°C/ 7 Days	–12 ± 2°C/ 14 Days	4 ± 2°C 48 h/ –12 ± 2°C 5 Days	4 ± 2°C 48 h/ –12 ± 2°C 12 Days
VOCs							
$MeCl_2$	97[C] (5)[D]	88 (5)	91 (4)	102 (4)	98 (5)	104 (5)	97 (7)
MTBE	103 (3)	101 (0)	103 (4)	101 (2)	100 (3)	102 (3)	100 (4)
1,1–Dichloroethane	98 (2)	94 (2)	98 (3)	100 (1)	100 (3)	99 (2)	99 (4)
CDCE	97 (1)	89 (3)	91 (5)	99 (1)	100 (2)	98 (1)	98 (7)
Chloroform	98 (4)	91 (1)	102 (2)	99 (2)	104 (3)	96 (1)	101 (3)
Benzene	99 (2)	91 (3)	90 (2)	102 (2)	103 (3)	98 (1)	101 (4)
TCE	100 (2)	100 (1)	97 (3)	101 (2)	99 (3)	100 (2)	102 (3)
Toluene	100 (4)	93 (2)	87 (4)	100 (3)	99 (4)	98 (3)	98 (4)
PCE	101 (1)	100 (1)	100 (3)	98 (2)	101 (4)	99 (2)	102 (4)
Ethyl benzene	103 (1)	98 (1)	92 (2)	99 (4)	98 (5)	101 (5)	100 (3)
o-Xylene	101 (2)	103 (1)	98 (3)	100 (1)	102 (3)	102 (3)	97 (3)

[A] Concentrations of the VOCs in the samples were ~100 µg/Kg, except for benzene concentrations ranging from ~70 to ~300 µg/Kg, toluene concentrations ranging from ~300 to ~900 µg/Kg, and o-xylene concentrations at ~200 µg/Kg.

[B] The mountain soil is 75 % sand, 13 % silt, 12 % clay, 4.3 % organic material, and ~12 % moisture.

[C] Average percent recovery is based on mean concentration values determined for five time-zero samples and five stored samples minus outlier data points. Testing was performed 6/2000 through 7/2000.

[D] The value in parentheses is the percent relative standard deviation of the concentration values in the stored samples. The percent relative standard deviation of the concentration values in the time-zero samples ranged from 1 to 7 % for the tests using the mountain soil in the 25–g devices.

for five days. In addition, for storage at 4 ± 2°C for 48 h, all of the analytes of interest have average percent recovery values of 90 % or greater, except for CDCE and chloroform, which have average percent recovery values of 87 %. The mean of the 33 average percent recovery values listed in Table X1.4 for the analytes of interest for the three storage conditions discussed above is 98 % recovery with a standard deviation of 6 % and a percent relative standard deviation of 6 %. For storage at -12 ± 2°C for 14 days and at 4 ± 2°C for 48 h followed by storage at -12 ± 2°C for 12 days, average percent recovery values are also greater than 90 %, except for $MeCl_2$, which has an average percent recovery of 82 % for storage at -12 ± 2°C for 14 days and 74 % for storage at 4 ± 2°C for 48 h followed by storage at -12 ± 2°C for 12 days. For storage at 4 ± 2°C for seven days, the analytes of interest have average percent recovery values greater than 80 %, except for CDCE at 75 % and toluene at 74 %. Lastly, for storage at 4 ± 2°C for 14 days, average percent recovery values are 100 % for MTBE; 88 % for 1,1–dichloroethane, TCE, and PCE; 76 % to 84 % for chloroform, benzene, toluene, CDCE, ethyl benzene, and o-xylene; and 71 % for $MeCl_2$.

X1.1.8.2 As shown in Table X1.5 for the 25-g En Core sampler, all of the VOCs of interest have average percent recovery values greater than 90 % for storage of the spiked mountain soil samples under all of the storage conditions used in this study. The only exceptions are $MeCl_2$ at 88 % recovery and CDCE at 89 % recovery for storage at 4 ± 2°C for seven days, and benzene at 90 % recovery and toluene at 87 % recovery for storage at 4 ± 2°C for 14 days. The mean of the 77 average percent recovery values listed in Table X1.5 for the

Copyright by ASTM Int'l (all rights reserved); Fri Mar 30 11:42:12 EST 2007
Downloaded/printed by
Gerald V Gilliland (Weston Solutions, Inc.) pursuant to License Agreement. No further reproductions authorized.

TABLE X1.6 Average Percent Recoveries of Low-Level[A] VOCs from Samples of Prairie Soil[B] Stored in 5-g En Core Samplers

Storage Conditions:	4 ± 2°C/ 48 h	4 ± 2°C/ 7 Days	4 ± 2°C/ 14 Days	–12 ± 2°C/ 7 Days	–12 ± 2°C/ 14 Days	4 ± 2°C 48 h/ –12 ± 2°C 5 Days	4 ± 2°C 48 h/ –12 ± 2°C 12 Days
VOCs							
Vinyl Chloride	87[C] (2)[D]	93 (9)	76 (10)	103 (10)	91 (9)	103 (3)	87 (16)
$MeCl_2$	87 (3)	88 (8)	76 (13)	95 (3)	95 (8)	102 (1)	89 (9)
MTBE	94 (2)	101 (7)	99 (4)	102 (5)	103 (4)	101 (5)	103 (6)
1,1–Dichloroethane	91 (4)	85 (9)	73 (9)	100 (4)	95 (8)	97 (2)	89 (8)
CDCE	87 (2)	75 (9)	62 (15)	94 (9)	88 (6)	89 (1)	81 (11)
Chloroform	90 (1)	87 (7)	77 (8)	95 (1)	94 (6)	96 (3)	92 (9)
Benzene	89 (4)	71 (10)	53 (10)	98 (5)	95 (5)	91 (2)	85 (9)
TCE	90 (5)	73 (7)	63 (12)	97 (6)	97 (6)	93 (3)	91 (9)
Toluene	80 (5)	57 (15)	32 (13)	93 (2)	90 (8)	85 (2)	74 (13)
PCE	90 (5)	72 (10)	56 (13)	96 (5)	100 (5)	91 (5)	93 (10)
Ethyl benzene	87 (5)	65 (15)	36 (12)	98 (11)	99 (4)	89 (3)	86 (8)
o-Xylene	85 (6)	58 (15)	37 (12)	96 (4)	98 (4)	84 (6)	84 (8)

[A] Concentrations of the VOCs in the samples were ~100 µg/Kg, except for benzene concentrations ranging from ~70 to ~300 µg/Kg, toluene concentrations ranging from ~300 to ~900 µg/Kg, and o-xylene concentrations at ~200 µg/Kg.
[B] The prairie soil is 67 % sand, 17 % silt, 16 % clay, 1.5 % organic material, and ~8 % moisture.
[C] Average percent recovery is based on mean concentration values determined for five time-zero samples and five stored samples minus outlier data points.
[D] The value in parentheses is the percent relative standard deviation of the concentration values in the stored samples. The percent relative standard deviation of the concentration values in the time-zero samples ranged from 1 to 14 % for all of the tests using the prairie soil in the 5–g devices.

TABLE X1.7 Average Percent Recoveries of Low-Level[A] VOCs from Samples of Prairie Soil[B] Stored in 25-g En Core Samplers

Storage Conditions:	4 ± 2°C/ 48 h	4 ± 2°C/ 7 Days	4 ± 2°C/ 14 Days	–12 ± 2°C/ 7 Days	–12 ± 2°C/ 14 Days	4 ± 2°C 48 h/ –12 ± 2°C 5 Days	4 ± 2°C 48 h/ –12 ± 2°C 12 Days
VOCs							
Vinyl Chloride	95[C] (8)[D]	92 (9)	87 (3)	105 (3)	88 (22)	93 (32)	92 (9)
$MeCl_2$	93 (8)	73 (11)	72 (8)	82 (12)	86 (7)	82 (10)	89 (5)
MTBE	97 (8)	99 (9)	94 (4)	102 (2)	100 (6)	102 (3)	99 (2)
1,1–Dichloroethane	94 (5)	89 (6)	83 (4)	99 (6)	98 (6)	99 (8)	95 (3)
CDCE	94 (5)	82 (2)	75 (7)	95 (7)	95 (5)	95 (9)	91 (3)
Chloroform	97 (4)	89 (3)	89 (3)	96 (6)	102 (3)	98 (7)	100 (4)
Benzene	91 (5)	83 (4)	71 (5)	101 (5)	97 (4)	101 (7)	92 (3)
TCE	95 (3)	80 (4)	75 (6)	100 (1)	97 (6)	97 (7)	94 (2)
Toluene	88 (1)	67 (4)	54 (12)	100 (4)	98 (4)	97 (6)	92 (13)
PCE	96 (3)	84 (4)	71 (6)	101 (5)	99 (3)	102 (6)	97 (3)
Ethyl benzene	95 (3)	71 (5)	60 (10)	97 (3)	97 (5)	95 (4)	93 (0)
o-Xylene	95 (2)	64 (1)	57 (10)	98 (1)	100 (4)	94 (5)	93 (4)

[A] Concentrations of the VOCs in the samples were ~100 µg/Kg, except for benzene concentrations ranging from ~70 to ~300 µg/Kg, toluene concentrations ranging from ~300 to ~900 µg/Kg, and o-xylene concentrations at ~200 µg/Kg.
[B] The prairie soil is 67 % sand, 17 % silt, 16 % clay, 1.5 % organic material, and ~8 % moisture.
[C] Average percent recovery is based on mean concentration values determined for five time-zero samples and five stored samples minus outlier data points.
[D] The value in parentheses is the percent relative standard deviation of the concentration values in the stored samples. The percent relative standard deviation of the concentration values in the time-zero samples ranged from 2 to 10 % for all of the tests using the prairie soil in the 25–g devices.

seven storage conditions is 99 % recovery with a standard deviation of 4 % and a percent relative standard deviation of 4 %.

X1.1.9 The average percent recoveries of the VOCs of interest from samples of the prairie soil stored in the 5-g En Core samplers are shown in Table X1.6; and the average percent recoveries of the VOCs of interest from samples of the prairie soil stored in the 25-g En Core samplers are shown in Table X1.7. In each of these tables, the percent relative standard deviation of the concentration values in the stored samples is given in parentheses next to the corresponding average percent recovery value. The percent relative standard deviation of the concentration values in the time-zero samples is given in a footnote to each of the tables.

X1.1.9.1 As shown in Table X1.6 and Table X1.7, vinyl chloride was added to the list of analytes of interest for the testing involving the prairie soil. This was done because in previous testing involving the prairie soil (see 8.2.2), the seals of some of the En Core samplers were affected by particles of this dry, loose soil, which scattered during capping of the devices. Because vinyl chloride is a very volatile compound, average percent recovery values for this analyte serve as a good indicator of loss from the samplers by volatilization due to compromised seals. In this study, to reduce the possibility of particles scattering, the surface of the prairie soil samples in the En Core devices were patted down prior to capping.

X1.1.9.2 As shown in Table X1.6 for the 5-g En Core sampler, all of the VOCs of interest have average percent recovery values equal to or greater than 90 % for storage of the spiked prairie soil samples at -12 ± 2°C for seven days, and for storage at -12 ± 2°C for 14 days, except for CDCE, which has an average percent recovery of 88 % for storage at -12 ± 2°C for 14 days. The mean of the 24 average percent recovery values listed in Table X1.6 for the analytes of interest for these

Copyright by ASTM Int'l (all rights reserved); Fri Mar 30 11:42:12 EST 2007
Downloaded/printed by
Gerald V Gilliland (Weston Solutions, Inc.) pursuant to License Agreement. No further reproductions authorized.

TABLE X1.8 Average Percent Recoveries of Low-Level[A] VOCs from Samples of Mountain Soil[B] Stored in 5-g En Core Samplers at –7 ± 1°C and –21 ± 2°C

Storage Conditions:	–7 ± 1°C 14 days	48 h/4 ± 2°C 5 days/–7 ± 1°C	–21 ± 2°C 14 days	48 h/4 ± 2°C 5 days/–21 ± 2°C
VOCs				
$MeCl_2$	88[C] (3)[D]	96(7)	89(4)	95(9)
MTBE	93(3)	93(8)	101(2)	98(5)
1,1-Dichloroethane	98(3)	101(7)	89(4)	98(7)
CDCE	97(4)	95(7)	89(6)	97(12)
Chloroform	96(3)	104(5)	92(2)	98(8)
Benzene	92(7)	94(7)	85(2)	92(8)
TCE	95(6)	97(5)	88(3)	95(8)
Toluene	99(5)	100(5)	88(1)	97(6)
PCE	98(5)	102(4)	90(5)	97(6)
Ethyl benzene	96(5)	102(4)	91(2)	96(7)
o-Xylene	102(5)	104(5)	89(0.4)	96(6)

[A] Concentrations of the VOCs in the samples were ~100 µg/Kg, except for benzene concentrations at ~200 µg/Kg to ~400 µg/Kg, toluene concentrations at ~650 µg/Kg to ~900 µg/Kg, ethyl benzene concentrations at ~200 µg/Kg, and o-xylene concentrations at ~300 µg/Kg.

[B] The mountain soil is 75 % sand, 13 % silt, 12 % clay, 4.3 % organic material, and ~12 % moisture.

[C] Average percent recovery is based on mean concentration values determined for 5 time-zero samples and 5 stored samples minus outlier data points.

[D] The value in parentheses is the percent relative standard deviation of the concentration values in the stored samples. The percent relative standard deviation of the concentration values in the time-zero samples ranged from 2 to 10 %.

TABLE X1.9 Average Percent Recoveries of Low-Level[A] VOCs from Samples of Mountain Soil[B] Stored in 25-g En Core Samplers at –7 ± 1°C and –21 ± 2°C

Storage Conditions:	–7 ± 1°C 14 days	48 h/4 ± 2°C 5 days/–7 ± 1°C	–21 ± 2°C 14 days	48 h/4 ± 2°C 5 days/–21 ± 2°C
VOCs				
$MeCl_2$	94[C] (3)[D]	98(2)	98(5)	96(3)
MTBE	105(4)	104(3)	94(1)	100(7)
1,1-Dichloroethane	96(2)	99(3)	98(5)	95(3)
CDCE	96(2)	97(2)	99(5)	96(3)
Chloroform	100(3)	99(2)	99(5)	97(2)
Benzene	93(4)	96(1)	99(3)	99(5)
TCE	98(3)	99(4)	96(3)	98(4)
Toluene	98(2)	100(2)	101(0.5)	97(3)
PCE	97(4)	101(2)	103(4)	102(3)
Ethyl benzene	97(3)	93(2)	98(0.4)	100(3)
o-Xylene	94(3)	96(3)	100(0.5)	100(2)

[A] Concentrations of the VOCs in the samples were ~100 µg/Kg, except for benzene concentrations at ~200 µg/Kg to ~400 µg/Kg, toluene concentrations at ~650 µg/Kg to ~900 µg/Kg, ethyl benzene concentrations at ~200 µg/Kg, and o-xylene concentrations at ~300 µg/Kg.

[B] The mountain soil is 75 % sand, 13 % silt, 12 % clay, 4.3 % organic material, and ~12 % moisture.

[C] Average percent recovery is based on mean concentration values determined for 5 time-zero samples and 5 stored samples minus outlier data points.

[D] The value in parentheses is the percent relative standard deviation of the concentration values in the stored samples. The percent relative standard deviation of the concentration values in the time-zero samples ranged from 4 to 6 %.

two storage conditions is 96 % recovery with a standard deviation of 4 % and a percent relative standard deviation of 4 %. In addition, all of the VOCs of interest have average percent recovery values of 80 % or greater for storage of the spiked prairie soil samples at 4 ± 2°C for 48 h, for storage at 4 ± 2°C for 48 h followed by storage at -12 ± 2°C for five days, and for storage at 4 ± 2°C for 48 h followed by storage at -12 ± 2°C for 12 days, except for toluene, which has an average percent recovery of 74 % for storage at 4 ± 2°C for 48 h followed by storage at -12 ± 2°C for 12 days. The mean of the 36 average percent recovery values listed in Table X1.6 for the analytes of interest for these three storage conditions is

TABLE X1.10 Summary of Average Percent Recoveries of Low-Level VOCs from Soil Samples Stored in the Disposable En Core Samplers

Soil Type/ Sample Size	Average Percent Recovery	Storage Condition	Analytes of Interest
River Bank, 5-g	90 % or Greater	4 ± 2°C for 48 h	All[A]
		-12 ± 2°C for 7 days	All
		4 ± 2°C for 48 h/-12 ± 2°C for 5 days	All
		4 ± 2°C for 48 h/-12 ± 2°C for 12 days	All
		4 ± 2°C for 7 days	All except $MeCl_2$ at 60 %
	80 % or Greater	-12 ± 2°C for 14 days	All except $MeCl_2$ at 60 %
River Bank, 25-g	90 % or Greater	4 ± 2°C for 48 h	All
		4 ± 2°C for 7 days	All
		-12 ± 2°C for 7 days	All
		4 ± 2°C for 48 h/-12 ± 2°C for 5 days	All
	80 % or Greater	-12 ± 2°C for 14 days	All
		4 ± 2°C for 14 days	All
		4 ± 2°C for 48 h/-12 ± 2°C for 12 days	All except $MeCl_2$ at 72 %; MTBE at 74 %; chloroform at 77 %
Mountain, 5-g	90 % or Greater	4 ± 2°C for 48 h/-7 ± 1°C for 5 days	All
		4 ± 2°C for 48 h/-12 ± 2°C for 5 days	All
		4 ± 2°C for 48 h/-21 ± 2°C for 5 days	All
		-12 ± 2°C for 7 days	All
		4 ± 2°C for 48 h/-12 ± 2°C for 12 days	All except $MeCl_2$ at 74 %
	80 % or Greater	4 ± 2°C for 48 h	All[A]
		-7 ± 1°C for 14 days	All
		-12 ± 2°C for 14 days	All
		-21 ± 2°C for 14 days	All
		4 ± 2°C for 7 days	All except CDCE at 75 % and toluene at 74 %
Mountain, 25-g	90 % or Greater	4 ± 2°C for 48 h	All
		4 ± 2°C for 48 h/-7 ± 1°C for 5 days	All
		4 ± 2°C for 48 h/-12 ± 2°C for 5 days	All
		4 ± 2°C for 48 h/-12 ± 2°C for 12 days	All
		4 ± 2°C for 48 h/-21 ± 2°C for 5 days	All
		-12 ± 2°C for 7 days	All
		-7 ± 1°C for 14 days	All
		-12 ± 2°C for 14 days	All
		-21 ± 2°C for 14 days	All
	80 % or Greater	4 ± 2°C for 7 days	All
		4 ± 2°C for 14 days	All
Prairie, 5-g	90 % or Greater	-12 ± 2°C for 7 days	All[A,B]
	80 % or Greater	4 ± 2°C for 48 h	All
		-12 ± 2°C for 14 days	All
		4 ± 2°C for 48 h/-12 ± 2°C for 5 days	All
		4 ± 2°C for 48 h/-12 ± 2°C for 12 days	All except toluene at 74 %

Copyright by ASTM Int'l (all rights reserved); Fri Mar 30 11:42:12 EST 2007
Downloaded/printed by
Gerald V Gilliland (Weston Solutions, Inc.) pursuant to License Agreement. No further reproductions authorized.

TABLE X1.10 Continued

Soil Type/ Sample Size	Average Percent Recovery	Storage Condition	Analytes of Interest
Prairie, 25-g	80 % or Greater	4 ± 2°C for 48 h	All[A,B]
		-12 ± 2°C for 7 days	All
		-12 ± 2°C for 14 days	All
		4 ± 2°C for 48 h/-12 ± 2°C for 5 days	All
		4 ± 2°C for 48 h/-12 ± 2°C for 12 days	All

[A] The analytes of interest are $MeCl_2$, MTBE, 1,1-dichloroethane, CDCE, chloroform, benzene, TCE, toluene, PCE, ethyl benzene, and o-xylene.
[B] Vinyl chloride is an additional analyte of interest for testing using the prairie soil.

TABLE X1.11 Summary of Average Percent Recoveries of Low-Level VOCs[A] from Mountain Soil[B] Stored in the Disposable En Core Samplers

Sample Size	Average % Recovery	Storage Condition
5-g	90 % or Greater	4 ± 2°C for 48 h/-7 ± 1°C for 5 days 4 ± 2°C for 48 h/-12 ± 2°C for 5 days 4 ± 2°C for 48 h/-21 ± 2°C for 5 days -12 ± 2°C for 7 days
5-g	80 % or Greater	4 ± 2°C for 48 h -7 ± 1°C for 14 days -12 ± 2°C for 14 days -21 ± 2°C for 14 days
25-g	90 % or Greater	4 ± 2°C for 48 h 4 ± 2°C for 48 h/-7 ±1°C for 5 days 4 ± 2°C for 48 h/-12 ± 2°C for 5 days 4 ± 2°C for 48 h/-21 ± 2°C for 5 days 4 ± 2°C for 48 h/-12 ± 2°C for 12 days -12 ± 2°C for 7 days -7 ± 1°C for 14 days -12 ± 2°C for 14 days -21 ± 2°C for 14 days
25-g	80 % or Greater	4 ± 2°C for 7 days 4 ± 2°C for 14 days

[A] VOCs are $MeCl_2$, MTBE, 1,1-dichloroethane, CDCE, chloroform, benzene, TCE, toluene, PCE, ethyl benzene, and o-xylene.
[B] The mountain soil is 75 % sand, 13 % silt, 12 % clay, 4.3 % organic material, and ~12 % moisture.

90 % recovery with a standard deviation of 6 % and a percent relative standard deviation of 7 %. For storage of the spiked prairie soil in the 5–g En Core sampler at 4 ± 2°C for seven days, average percent recovery values for vinyl chloride and MTBE are 93 % and 101 %, respectively. In addition, for this storage condition, average percent recovery values range from 85 % to 88 % for 1,1–dichloroethane, chloroform, and $MeCl_2$; from 71 % to 75 % for benzene, PCE, TCE, and CDCE; and from 57 % to 65 % for toluene, o-xylene, and ethyl benzene. For storage of the prairie soil samples at 4 ± 2°C for 14 days, the average percent recovery value for MTBE is 99 %, while average percent recovery values for 1,1–dichloroethane, $MeCl_2$, vinyl chloride, and chloroform range from 73 % to 77 %; average percent recovery values for benzene, PCE, CDCE, and TCE range from 53 % to 63 %; and average percent recovery values for toluene, ethyl benzene, and o-xylene range from 32 % to 37 %.

X1.1.9.3 As shown in Table X1.7 for the 25–g En Core sampler, all of the VOCs of interest have average percent recovery values greater than 90 % for storage of the spiked prairie soil samples at 4 ± 2°C for 48 h, for storage at -12 ± 2°C for seven days, for storage at -12 ± 2°C for 14 days, for storage at 4 ± 2°C for 48 h followed by storage at -12 ± 2°C for five days, and for storage at 4 ± 2°C for 48 h followed by storage at -12 ± 2°C for 12 days. The only exceptions are toluene at 88 % recovery for storage at 4 ± 2°C for 48 h, $MeCl_2$ ranging from 82 % to 89 % recovery for the last four storage conditions, and vinyl chloride at 88 % recovery for storage at -12 ± 2°C for 14 days. The mean of the 60 average percent recovery values listed in Table X1.7 for the analytes of interest for the five storage conditions discussed above is 96 % recovery with a standard deviation of 5 % and a percent relative standard deviation of 5 %. For storage at 4 ± 2°C for seven days, the VOCs of interest have average percent recovery values that are greater than 80 %, except for o-xylene, toluene, ethyl benzene, and $MeCl_2$, which have average percent recovery values ranging from 64 % to 73 %. For storage of the spiked prairie soil in the 25-g En Core sampler at 4 ± 2°C for 14 days, the average percent recovery for MTBE is 94 %. In addition, for this storage condition, average percent recovery values range from 83 % to 89 % for 1,1–dichloroethane, vinyl chloride, and chloroform; from 71 % to 75 % for PCE, benzene, $MeCl_2$, TCE, and CDCE; and from 54 % to 60 % for toluene, o-xylene, and ethyl benzene.

X1.1.9.4 As discussed in X1.1.9.1, in previous testing, lower average percent recovery values for the prairie soil were due to scattered particles compromising the seals of the En Core caps. The average percent recovery values for vinyl chloride from the spiked prairie soil samples in this study range from 76 % to 103 % for the 5-g sampler and 87 % to 105 % for the 25–g sampler for up to 14 days of storage (Table X1.6 and Table X1.7). These average percent recovery values show that the seals of the samplers in this study were not compromised. If volatilization losses occurred because of compromised seals, these values would be expected to be much lower due to the volatility of vinyl chloride. Biodegradation also does not seem to be an explanation for the lower average percent recovery values for the prairie soil samples stored for 7 and 14 days at 4 ± 2°C, because some of the compounds having lower average percent recovery values are chlorinated, and chlorinated compounds are resistant to biodegradation. In addition, the microbial activity of the river bank soil is slightly higher than that of the prairie soil (see X1.1.1), so if biodegradation is occurring, a similar trend would be expected for the river bank soil average percent recovery values. It appears that some sort of reaction between some of the analytes of interest (such as CDCE, benzene, TCE, toluene, PCE, ethyl benzene, and o-xylene) and the prairie soil may be occurring at 4 ± 2°C that is hindered by the lower freezing temperature. The prairie soil has undergone additional characterization; however, no information has been obtained to further explain the data.

X1.2 A second study was performed to evaluate the performance of the 5- and 25-g En Core samplers to store the mountain soil (see X1.1.1) used in the study described in X1.1 at temperatures of –7 ± 1°C and –21 ± 2°C. The 5-g devices used in this study were from lot number K113224, and the 25-g devices were from lot number K113206. The VOCs used in the

Copyright by ASTM Int'l (all rights reserved); Fri Mar 30 11:42:12 EST 2007
Downloaded/printed by
Gerald V Gilliland (Weston Solutions, Inc.) pursuant to License Agreement. No further reproductions authorized.

study are the same as those listed in X1.1.2, and the storage conditions used in the study are –7 ± 1°C for 14 days, –21 ± 2°C for 14 days, 4 ± 2°C for 48 h followed by storage for 5 days at –7 ± 1°C, and 4 ± 2°C for 48 h followed by storage for 5 days at –21 ± 2°C.

X1.2.1 This second study was performed as described in sections X1.1.3 through X1.1.5. As in the previous study, the samples were spiked to give an approximate concentration of 100 µg/Kg of each analyte of interest in the samples, with the exception of benzene, toluene, ethyl benzene, and o-xylene. Because of their presence in the gasoline-saturated water, the concentrations of benzene were approximately 200 µg/Kg to approximately 400 µg/Kg, and the concentrations of toluene were approximately 650 µg/Kg to approximately 900 µg/Kg. Additional o-xylene and ethyl benzene were also added to the spiking solution by the gasoline-saturated water. This resulted in o-xylene and ethyl benzene concentrations in the spiked soil samples at approximately 300 µg/Kg and approximately 200 µg/Kg, respectively.

X1.2.2 The temperatures in the freezers used to store the samples at –7 and –21°C were monitored using mini temperature data loggers.

X1.2.3 As for the data generated in the study described in X1.1, the data generated by this testing are specific to the experimental design of the study. They give information on the performance of the En Core samplers for storing soil samples collected from loose soil, spiked with a gasoline-saturated water solution containing selected analytes of interest, and then stored under specific storage conditions. The data generated by this testing are specific to the soil used in the study, the analytes of interest, the analyte concentrations, and the storage conditions that were evaluated. For other soil types, analytes, analyte concentrations, and storage conditions, these data may not apply.

X1.2.4 The average percent recoveries of the VOCs of interest from samples of the mountain soil stored in the 5-g En Core samplers are shown in Table X1.8; and the average percent recoveries of the VOCs of interest from the samples of the mountain soil stored in the 25-g En Core samplers are shown in Table X1.9. In each of these tables, the percent relative standard deviation of the concentration values in the stored samples is given in parentheses next to the corresponding average percent recovery value. The percent relative standard deviation of the concentration values in the time-zero samples is given in a footnote to each of the tables.

X1.2.4.1 As shown in Table X1.8 for the 5-g sampler, all of the VOCs of interest have average percent recovery values that are greater than 90 % for storage at 4 ± 2°C for 48 h followed by storage at –7 ± 1°C for 5 days and for storage at 4 ± 2°C for 48 h followed by storage at -21 ± 2°C for 5 days. For storage at –7 ± 1°C for 14 days and for storage at –21 ± 2°C for 14 days, the average percent recovery values for all of the analytes of interest are greater than 80 %.

X1.2.4.2 As shown in Table X1.9 for the 25-g sampler, all of the VOCs of interest have average percent recovery values that are greater than 90 % for storage at 4 ± 2°C for 48 h followed by storage at –7 ± 1°C for 5 days, for storage at –7 ± 1°C for 14 days, for storage at 4 ± 2°C for 48 h followed by storage at –21 ± 2°C for 5 days, and for storage at –21 ± 2°C for 14 days.

X1.3 A summary of the information obtained from the studies described in X1.1 and X1.2 is presented in Table X1.10. This table shows the storage conditions for which all or most of the analytes of interest have 90 % or greater or 80 % or greater average percent recovery for storage of the spiked soil in the 5-g and 25-g disposable En Core samplers. In addition, the data generated in the studies described in X1.1 and X1.2 for the mountain soil can be summarized as shown in Table X1.11. This table shows the storage conditions for the spiked mountain soil samples for which the average percent recovery values are 90 % or greater or 80 % or greater for the analytes of interest.

X2. PERFORMANCE OF THE 25–GRAM EN CORE SAMPLER TO STORE SOIL SAMPLES FOR VOC CHARACTERIZATION USING EPA METHOD 1311

X2.1 A study was conducted to evaluate the performance of the 25–g En Core sampler to store a soil spiked with EPA Method 1311 volatile analytes for subsequent characterization using EPA Method 1311. The En Core samplers used in this study were manufactured in July 2000. The 25–g devices that were used represent lot number K110187. The manufacturer can be contacted for information on this lot number.

X2.1.1 The soil used in the study was collected from a mountainous region in southeastern Wyoming. The soil contains 75 % sand, 13 % silt, 12 % clay, 4.3 % organic material, and approximately 12 % moisture, and has a dehydrogenase (microbial) activity of 11 mg total product formed (TPF)/g/24 h.

X2.1.2 In the study, data were generated for 22 of the 25 Method 1311 volatile analytes. Data could not be generated for methanol because it is the extraction solvent that was used for VOC analysis (see X2.1.3). In addition, data could not be generated for isobutanol and n-butanol because of the difficulty in purging these compounds from the methanol-water mixture during analysis and because of the type of trap used for the purge-and-trap technique. The VOCs for which data were generated in the study are listed in Table X2.1.

X2.1.3 In this study, soil samples were collected in the 25-g En Core samplers from a large container of loose soil and then spiked with one of the spiking solutions described in X2.1.4. The spiking solution was injected into the middle of the soil plug in the sampler, and the sampler was immediately capped. After all samples were spiked and capped, five random samples for each spiking solution were extruded into methanol for analysis to give time-zero concentrations of the analytes of interest. The remaining samples were stored under the storage conditions shown in Table X2.2. As shown in this table,

Copyright by ASTM Int'l (all rights reserved); Fri Mar 30 11:42:12 EST 2007
Downloaded/printed by
Gerald V Gilliland (Weston Solutions, Inc.) pursuant to License Agreement. No further reproductions authorized.

TABLE X2.1 VOCs Used in the Study to Evaluate Performance of the 25–g En Core Sampler to Store Samples for EPA Method 1311

Acetone
Benzene
Carbon disulfide
Carbon tetrachloride
Chlorobenzene
Chloroform
1,2–Dichloroethane
1,1–Dichloroethylene
Ethyl acetate
Ethyl benzene
Ethyl ether
Methylene chloride
Methyl ethyl ketone (MEK)
Methyl isobutyl ketone (MIBK)
Tetrachloroethylene (PCE)
Toluene
1,1,1–Trichloroethane
Trichloroethylene (TCE)
Trichlorofluoromethane
1,1,2–Trichloro-1,2,2–trifluoroethane (Freon 113)
Vinyl chloride
Total Xylenes

freezing at -12 ± 2°C was evaluated as a storage condition. A frozen sample would not be appropriate for extraction in the zero-headspace extractor as specified in Method 1311. However, if the option that is given in Method 1311 for total analysis of the sample is performed, freezing may be a means of sample preservation during storage (see 3.2). For each spiking solution, five samples were stored under each storage condition. Storage temperatures were monitored to make sure they were at the specified temperature. After the samples were held for the appropriate times, they were extruded into methanol for extraction and analysis. The methanol extracts of the samples were analyzed using EPA Methods 8260B and 5030B.

X2.1.4 A single spiking solution containing all 22 compounds listed in Table X2.1 could act as a preservative. Therefore, the compounds were divided into three spiking solutions containing a smaller number of analytes. The first spiking solution contained vinyl chloride, carbon disulfide, chlorobenzene, 1,2–dichloroethane, 1,1–dichloroethylene, PCE, carbon tetrachloride, and chloroform. The second spiking solution contained trichlorofluoromethane, Freon 113, 1,1,1–trichloroethane, ethyl benzene, TCE, total xylenes, ethyl ether, and methylene chloride. The third spiking solution contained acetone, ethyl acetate, MEK, and MIBK. Benzene and toluene were present in all three spiking solutions. The spiking solutions were prepared by injecting a methanol solution containing a mixture of the specific analytes into gasoline-saturated water. Benzene and toluene were not present in the methanol solution, but came totally from the gasoline used to prepare the gasoline-saturated water. Spiking the soil samples in the 25-g En Core devices with 0.5 mL of the first or second spiking solution gave an approximate concentration of 100 µg/Kg of each analyte in the soil, except for benzene, toluene, and total xylenes. The spiked soil samples contained approximately 300 µg/Kg of benzene and approximately 1,000 µg/Kg of toluene. Additional xylene and ethyl benzene were added to the second spiking solution by the gasoline-saturated water. This resulted in xylene and ethyl benzene concentrations in the spiked soil at approximately 500 µg/Kg and approximately 100 µg/Kg, respectively. The third spiking solution was prepared as described above; however, because of the difficulty in purging acetone, ethyl acetate, MEK, and MIBK from the water-methanol mixture during analysis of the methanol extract of the soil, the spiking solution was prepared and the samples were spiked to give higher concentrations of these analytes in the soil. Their concentrations in the spiked soil were as follows: acetone at approximately 2000 µg/Kg, MEK at approximately 4000 µg/Kg, ethyl acetate at approximately 1000 µg/Kg, and MIBK at approximately 4000 µg/Kg.

X2.1.5 To evaluate the data, the mean concentrations of the analytes in the stored samples were compared to their mean concentrations in the time-zero samples by calculating average percent recovery. Before average percent recovery was calculated, the data sets were evaluated for outlier data points as described in Practice D 2777.

X2.1.6 The data generated by this testing are specific to the experimental design of the study. The data give information on the performance of the 25-g En Core sampler for storing soil samples collected from loose soil, spiked with a gasoline-saturated water solution containing EPA Method 1311 volatile organic analytes, and then stored under various storage conditions for 14 days. The data generated by this testing are also specific to the soil used in the study, the analytes used, the analyte concentrations, and the storage conditions that were evaluated. For other matrices and soil types, analytes, analyte concentrations, and storage conditions, these data may not apply.

X2.1.7 The average percent recoveries of Method 1311 volatile analytes from the spiked mountain soil samples stored in the 25–g disposable En Core samplers are shown in Table X2.3. In this table, the percent relative standard deviation of the concentration values in the stored samples is given in parentheses next to the corresponding average percent recovery value. The percent relative standard deviation of the concentration values in the time-zero samples is given in a footnote to the table.

X2.1.7.1 As shown in Table X2.3, carbon disulfide and ethyl acetate have very low recoveries from the stored samples for all three storage conditions. Based on the data for the other compounds listed in Table X2.3, it can be assumed that this is not due to loss of these compounds from the samples, but most likely due to a reaction with the soil matrix.

X2.1.7.2 Average percent recovery values for the compounds listed in Table X2.3, excluding carbon disulfide and ethyl acetate, range from 83 % to 103 % for storage at 4 ± 2°C for 14 days, except for 1,2–dichloroethane at 75 % recovery and 1,1–dichloroethylene at 71 % recovery; average percent recovery values for the compounds listed in Table X2.3, excluding carbon disulfide and ethyl acetate, for storage at 4 ± 2°C for 48 h and then 12 days at -12 ± 2°C range from 85 % to 103 %; and average percent recovery values for the compounds listed in Table X2.3, excluding carbon disulfide and ethyl acetate, range from 91 % to 105 % for storage at -12 ± 2°C for 14 days. Percent recovery values for benzene and toluene in the samples spiked with the first and second spiking solutions (see X2.1.4) are listed in Table X2.3 (benzene,

Copyright by ASTM Int'l (all rights reserved); Fri Mar 30 11:42:12 EST 2007
Downloaded/printed by
Gerald V Gilliland (Weston Solutions, Inc.) pursuant to License Agreement. No further reproductions authorized.

TABLE X2.2 Storage Conditions for Testing the 25–g En Core Sampler to Store Samples for EPA Method 1311

Storage Times/ Conditions	No Storage	48 h at 4 ± 2°C in a cooler/ 12 Days at 4 ± 2°C in a refrigerator	14 days in a freezer at -12 ± 2°C	48 h at 4 ± 2°C in a cooler/ 12 days at -12 ± 2°C in a freezer
Time-zero	5 samples			
14 days		5 samples		
14 days			5 samples	
14 days				5 samples

TABLE X2.3 Average Percent Recoveries of Method 1311 Volatile Analytes from Mountain Soil Samples Stored in 25–g Disposable En Core Samplers

Storage Conditions:	48 h at 4 ± 2°C in cooler/ 12 days at 4 ± 2°C in refrigerator	48 h at 4 ± 2°C in cooler/ 12 days at -12 ± 2°C in freezer	14 days in freezer at -12 ± 2°C
VOCs			
Acetone	101[A] (8)[B]	98 (3)	99 (9)
Benzene	98 (3)	103 (3)	103 (5)
Benzene in duplicate sample	100 (2)	101 (0.5)	102 (4)
Carbon disulfide	8 (10)	29 (17)	55 (7)
Carbon tetrachloride	97 (2)	98 (4)	102 (5)
Chlorobenzene	96 (2)	99 (2)	97 (3)
Chloroform	94 (1)	102 (3)	100 (2)
1,2–Dichloroethane	75 (2)	99 (3)	100 (4)
1,1–Dichloroethylene	71 (13)	88 (4)	95 (6)
Ethyl acetate	< 27	< 27	< 27
Ethyl benzene	102 (2)	99 (2)	100 (3)
Ethyl ether	97 (6)	98 (1)	93 (4)
Methylene chloride	98 (5)	100 (2)	104 (8)
MEK	96 (9)	95 (4)	95 (8)
MIBK	103 (3)	99 (2)	99 (7)
PCE	98 (3)	99 (1)	103 (1)
Toluene	94 (2)	99 (4)	99 (3)
Toluene in duplicate sample	95 (2)	99 (2)	99 (3)
1,1,1–Trichloroethane	94 (5)	96 (2)	97 (2)
TCE	101 (2)	101 (1)	105 (5)
Trichlorofluoromethane	87 (5)	87 (3)	91 (7)
Freon 113	85 (7)	87 (5)	93 (3)
Vinyl chloride	83 (16)	85 (8)	92 (13)
Total Xylenes	100 (1)	100 (2)	101 (3)

[A]Average percent recovery is based on mean concentration values determined for five time-zero samples and five stored samples minus outlier data points.
[B]The value in parentheses is the percent relative standard deviation of the concentration values in the stored samples. The percent relative standard deviation of the concentration values in the time-zero samples ranged from 1 % to 6 % for all of the analytes, except for ethyl ether at 11 % and ethyl acetate at 37 %.

benzene in duplicate sample, toluene, toluene in duplicate sample). As shown, there is close agreement between average percent recovery values for the duplicates for the three storage conditions.

X2.1.7.3 For most of the compounds listed in Table X2.3, percent relative standard deviations of the concentration values in the stored samples (values in parentheses) are less than 10 %, showing good precision of the performance of the En Core samplers to store the spiked soil samples.

ASTM International takes no position respecting the validity of any patent rights asserted in connection with any item mentioned in this standard. Users of this standard are expressly advised that determination of the validity of any such patent rights, and the risk of infringement of such rights, are entirely their own responsibility.

This standard is subject to revision at any time by the responsible technical committee and must be reviewed every five years and if not revised, either reapproved or withdrawn. Your comments are invited either for revision of this standard or for additional standards and should be addressed to ASTM International Headquarters. Your comments will receive careful consideration at a meeting of the responsible technical committee, which you may attend. If you feel that your comments have not received a fair hearing you should make your views known to the ASTM Committee on Standards, at the address shown below.

This standard is copyrighted by ASTM International, 100 Barr Harbor Drive, PO Box C700, West Conshohocken, PA 19428-2959, United States. Individual reprints (single or multiple copies) of this standard may be obtained by contacting ASTM at the above address or at 610-832-9585 (phone), 610-832-9555 (fax), or service@astm.org (e-mail); or through the ASTM website (www.astm.org).

Copyright by ASTM Int'l (all rights reserved); Fri Mar 30 11:42:12 EST 2007
Downloaded/printed by
Gerald V Gilliland (Weston Solutions, Inc.) pursuant to License Agreement. No further reproductions authorized.

U. S. EPA ENVIRONMENTAL RESPONSE TEAM

STANDARD OPERATING PROCEDURES

MONITORWELL DEVELOPMENT

CONTENTS

1.0 SCOPE AND APPLICATION*

2.0 METHOD SUMMARY*

3.0 SAMPLE PRESERVATION, CONTAINERS, HANDLING, AND STORAGE

4.0 INTERFERENCES AND POTENTIAL PROBLEMS*

5.0 EQUIPMENT/APPARATUS*

6.0 REAGENTS

7.0 PROCEDURES

- 7.1 Preparation
- 7.2 Operation*
- 7.3 Post-Operation

8.0 CALCULATIONS*

9.0 QUALITY ASSURANCE/QUALITY CONTROL*

10.0 DATA VALIDATION

11.0 HEALTH AND SAFETY

12.0 REFERENCES*

13.0 APPENDICES*

*These sections affected by Revision 0.1.

SUPERCEDES: SOP #2044; Revision 0.0; 2/18/00; U.S. EPA Contract 68-C99-223.

1.0 SCOPE AND APPLICATION

The purpose of this standard operating procedure (SOP) is to provide an overview of monitor well development practices. The purpose of monitor well development is to ensure removal of fine grained sediments (fines) from the vicinity of the well screen. This allows the water to flow freely from the formation into the well, and also reduces the turbidity of the water during sampling. The most common well development methods are: surging, jetting,overpumping,and bailing.

Surging involves raising and lowering a surge block or surge plunger inside the well. The resulting surging motion forces water into the formation and loosens sediment, pulled from the formation into the well. Occasionally, sediments must be removed from the well with a sand bailer to prevent sand locking of the surge block. This method may cause the sand pack around the screen to be displaced to a degree that damages its value as a filtering medium. Channels or voids may form near the screen if the filter pack sloughs away during surging (Keel and Boating, 1987).

Surging with compressed air is done by injecting a sudden charge of compressed air into the well with an air line so that water is forced through the well screen. The air is then turned off so that the water column falls back into the well and the process is repeated. Periodically, the air line is pulled up into a pipe string (educator) and water is pumped from the well using air as the lifting medium (air-lift pumping). The process is repeated until the well is sediment free. Method variations include leaving the air line in the pipe string at all times or using the well casing as the educator pipe.

Jetting involves lowering a small diameter pipe into the well and injecting a high velocity horizontal stream of water or air through the pipe into the screen openings. This method is especially effective at breaking down filter cakes developed during mud rotary drilling. Simultaneous air-lift pumping is usually used to remove fines.

Overpumping involves pumping at a rate rapid enough to draw the water level in the well as low as possible, and then allowing the well to recharge to the original level. This process is repeated until sediment-free water is produced.

Bailing includes the use of a simple manually operated check-valve bailer to remove water from the well. The bailing method, like other methods, should be repeated until sediment free water is produced. Bailing may be the method of choice in a shallow well or well that recharges slowly.

These are standard (i.e., typically applicable) operating procedures which may be varied or changed as required, dependent on site conditions, equipment limitations or limitations imposed by the procedure. In all instances, the ultimate procedures employed should be documented and associated with a final report.

Mention of trade names or commercial products does not constitute United States Environmental Protection

Agency (U.S. EPA) endorsement or recommendation for use.

2.0 METHOD SUMMARY

After installation, development of a well should occur as soon as it is practical. It should not occur any sooner than 48 hours after grouting is completed, especially if a vigorous well development method (i.e. surging) is being used. If a less vigorous method (i.e bailing) is used, it may be initiated shortly after installation. The method used for development should not interfere with the setting of the well seal.

Several activities must take place prior to well development. First, open the monitor well, take initial measurements (i.e., head space air monitoring readings, water level, total depth of the well) and record results in the site logbook. Develop the well by the appropriate method to accommodate site conditions and project objectives. Continue until the development water is clear and free of sediments, or until parameters such as pH, temperature, and specific conductivity stabilize. Containerize all purge water from wells with known or suspected contamination. Record final measurements in the site logbook. Decontaminate equipment as appropriate prior to use in the next well.

3.0 SAMPLE PRESERVATION, CONTAINERS, HANDLING, AND STORAGE

This section is not applicable to this SOP.

4.0 INTERFERENCES AND POTENTIAL PROBLEMS

The following problems may be associated with well development:

1. Overpumping is not as vigorous as surging and jetting, and is probably the most desirable method for monitor well development. The possibility of disturbing the filter pack is greatest with surging and jetting well development methods.

2. The introduction of external water or air by jetting may alter the hydro chemistry of the aquifer.

3. Surging with air may produce "air locking" in some formations, preventing water from flowing into the well.

4. The use of surge blocks in formations containing clay may cause plugging of the screen.

5. Small (2-inch nominal diameter) submersible pumps that will fit in 2-inch diameter well casing are especially susceptible to clogging if used in well development applications.

6. Chemicals/reagents used during the decontamination of drilling equipment may complicate well development.

5.0 EQUIPMENT/APPARATUS

The type of equipment used for well development is dependent on the diameter of the well and the development method. For example, the diameter of most submersible pumps is too large to fit into a two-inch inner diameter (I.D.) well, and other development methods should be used. Obtaining the highest possible yield is not usually an objective in developing monitor wells and vigorous development is not always necessary. Many monitor wells are constructed in fine-grained formations that would not normally be considered aquifers. Specifications for the drilling contract should include the necessary well development equipment (air compressors, pumps, air lines, surge blocks, generators).

6.0 REAGENTS

The use of chemicals in developing wells that will be used to monitor groundwater quality should be avoided if possible; however, polyphosphates (a dispersing agent), acids, or disinfectants are often used in general well development. Polyphosphates should not be used in thinly bedded sequences of sands and clays. The use of decontamination solutions may also be necessary. If decontamination of equipment is required at a well, refer to Environmental Response Team/Response Engineering and Analytical Contract (ERT/REAC) SOP #2006, *Sampling Equipment Decontamination* and the site specific work plan.

7.0 PROCEDURES

7.1 Preparation

1. Coordinate site access and obtain keys to well locks.

2. Obtain information on each well to be developed (i.e., drilling method, well diameter, well depth, screened interval, anticipated contaminants).

3. Obtain a water level meter, a depth sounder, air monitoring instruments, materials for decontamination, and water quality instrumentation capable of measuring, at a minimum, pH, specific conductivity, temperature, and turbidity. Dissolved oxygen (DO) and salinity are also useful parameters.

4. Assemble containers for temporary storage of water produced during well development. Containers must be structurally sound, compatible with anticipated contaminants, and easy to manage in the field. The use of truck-mounted or roll-off tanks may be necessary in some cases; alternately, a portable water treatment unit (i.e., activated carbon) may be used to decontaminate the purge water.

7.2 Operation

Development should be performed as soon as it is practical after the well is installed, but no sooner than 48 hours after well completion.

1. Assemble necessary equipment on a plastic sheet surrounding the well.

2. Record pertinent information in the site or personal logbook (personnel, time, location ID, etc.).

3. Open monitor well, take air monitor reading at the top of casing and in the breathing zone as appropriate.

4. Measure depth to water and the total depth of the monitor well. Calculate the water column volume of the well (Equation 1, Section 8.0).

5. Begin development and measure the initial pH, temperature, turbidity, and specific conductivity of the water and record in the site logbook. Note the initial color, clarity, and odor of the water.

6. Continue to develop the well and periodically measure the water quality parameters indicated in step 5 (above). Depending on project objectives and available time, development should proceed until these water quality parameters stabilize, or until the water has a turbidity of less than 50 nephelometric turbidity units (NTUs).

7. All water produced by development of contaminated or suspected contaminated wells must be containerized or treated. Each container must be clearly labeled with the location ID, date collected, and sampling contractor. Determination of the appropriate disposal method will be based on the analytical results from each well.

8. No water shall be added to the well to assist development without prior approval by the appropriate U.S. EPA ERT Work Assignment Manager (WAM) and/or appropriate state personnel. In some cases , small amounts of potable water may be added to help develop a poor yielding well. It is essential that at least five times the amount of water injected must be recovered from the well in order to assure that all injected water is removed from the formation.

9. Note the final water quality parameters in the site or personal logbook along with the following data:

   - Well designation (location ID)
   - Date(s) of well installation
   - Date(s) and time of well development

- C Static water level before and after development
- C Quantity of water removed, and initial and completion time
- C Type and capacity of pump or bailer used
- C Description of well development techniques

7.3 Post-Operation

1. Decontaminate all equipment;

2. Secure holding tanks or containers of development water;

3. Review analytical results and determine the appropriate water disposal method. Actual disposal of the purge water is generally carried out by the On-Scene Coordinator (OSC).

8.0 CALCULATIONS

To calculate the volume of water in the well, the following equation is used:

Well Volume (V) = Br^2 h (cf) [Equation 1]

where:

B	=	pi (3.14)
r	=	radius of monitoring well in feet (ft)
h	=	height of the water column in ft. [This may be determined by subtracting the depth to water from the total depth of the well as measured from the same reference point.]
cf	=	conversion factor in gallons per cubic foot (gal/ft^3) = 7.48 gal/ft^3. [In this equation, 7.48 gal/ft^3 is the necessary conversion factor.]

Monitor well diameters are typically 2-, 3-, 4-, or 6-inches. A number of standard conversion factors can be used to simplify the above equation using the diameter of the monitor well. The volume, in gallons per linear foot, for various standard monitor well diameters can be calculated as follows:
where:

V (gal/ft) = Br^2 (cf) [Equation 2]

B	=	pi
r	=	radius of monitoring well (feet)
cf	=	conversion factor (7.48 gal/ft^3)

For example, a two inch diameter well, the volume per linear foot can be calculated as follows:

$$V\ (gal/ft) = Br^2\ (cf) \quad \text{[Equation 2]}$$
$$= 3.14\ (1/12\ ft)^2\ 7.48\ gal/ft^3$$
$$= 0.1631\ gal/ft$$

NOTE: The diameter must be converted to the radius in feet as follows:

$$\frac{\text{Well Diameter (inches)}}{12} \times 0.5 = \text{Well Radius (feet)} \quad \text{[Equation 3]}$$

The volume in gallons/feet for the common size monitor wells are as follows:

Well diameter (inches)	2	3	4	6
Volume (gal/ft)	0.1631	0.3670	0.6524	1.4680

If you utilize the volumes for the common size wells above, Equation 1 is modified as follows:
where:

$$\text{Well volume} = (h)(f) \quad \text{[Equation 4]}$$

h = height of water column (feet)
f = the volume in gal/ft calculated from Equation 2

9.0 QUALITY ASSURANCE/QUALITY CONTROL

There are no specific quality assurance activities, which apply to the implementation of these procedures. However, the following general quality assurance/quality control (QA/QC) procedures apply:

1. All data must be documented in site and/or personal logbooks.

2. All instrumentation must be operated in accordance with operating instructions as supplied by the manufacturer, unless otherwise specified in the work plan. Equipment checkout and calibration activities must occur prior to sampling/operation and must be documented.

10.0 DATA VALIDATION

This section is not applicable to this SOP.

11.0 HEALTH AND SAFETY

When working with potentially hazardous materials, follow U.S. EPA, Occupational Safety and Health (OSHA), and corporate health and safety practices.

12.0 REFERENCES

Driscoll, F. G. 1986. "Development of Water Wells." In: *Groundwater and Wells.* Second Edition. Chapter 15. Johnson Filtration Division, St. Paul, Minnesota. p. 497-533.

Freeze, Allan R. and John A. Cherry. 1979. *Groundwater*. Englewood Cliffs, NJ: Prentice-Hall, Inc.

Keel, J.F. and Kwasi Boating. 1987. "Monitoring Well Installation, Purging, and Sampling Techniques - Part 1: Conceptualizations". *Groundwater,* 25(3):300-313.

Keel, J.F. and Kwasi Boating. 1987. "Monitoring Well Installation, Purging, and Sampling Techniques - Part 2: Case Histories". *Groundwater*, 25(4):427-439.

13.0 APPENDICES

This section is not applicable to this SOP.

MONITOR WELL INSTALLATION

CONTENTS

1.0 SCOPE AND APPLICATION*

2.0 METHOD SUMMARY

2.1 Hollow-Stem Augering*
2.2 Cable Tool Drilling*
2.3 Rotary Drilling

2.3.1 Mud Rotary Method*
2.3.2 Air Rotary Method*

3.0 SAMPLE PRESERVATION, CONTAINERS, HANDLING, AND STORAGE*

4.0 INTERFERENCES AND POTENTIAL PROBLEMS*

4.1 Auger Drilling*
4.2 Cable Tool Drilling*
4.3 Rotary Drilling

4.3.1 Mud Rotary Drilling*
4.3.2 Air Rotary Drilling*

5.0 EQUIPMENT/APPARATUS*

6.0 REAGENTS*

7.0 PROCEDURES*

7.1 Preparation*
7.2 Field Preparation
7.3 Well Construction

7.3.1 Bedrock Wells*
7.3.2 Overburden Well Construction*

7.4 Well Development

8.0 CALCULATIONS*

9.0 QUALITY ASSURANCE/QUALITY CONTROL*

CONTENTS (cont)

10.0 DATA VALIDATION

11.0 HEALTH AND SAFETY*

12.0 REFERENCES*

13.0 APPENDICES*

A Figures

*These sections affected by Revision 0.0

SUPERSEDES: SOP #2048, Revision 0.0; 2/29/96; US EPA Contract EP-W-09-031.

1.0 SCOPE AND APPLICATION

The purpose of this Standard Operating Procedure (SOP) is to provide an overview of the methods used for the installation of groundwater monitor wells. Monitor well installation creates a permanent access for the collection of samples to assess groundwater quality and the hydrogeologic properties of the aquifer, in which contaminants may exist. Such wells should not alter the medium which is being monitored.

The most commonly used drilling methods are: hollow-stem auger, cable tool, and hydraulic rotary. Rotary drilling can utilize mud rotary or air rotary methods.

These are standard (i.e., typically applicable) operating procedures which may be varied or changed as required, depending on site conditions, equipment limitations, or limitations imposed by the procedure. In all instances, the ultimate procedures employed should be documented and associated with the final report.

Mention of trade names or commercial products does not constitute United States Environmental Protection Agency (U.S. EPA) endorsement or recommendation for use.

2.0 METHOD SUMMARY

There is no ideal monitor well installation method for all conditions; therefore, hydrogeologic conditions at the site, as well as project objectives, must be considered before deciding which drilling method is appropriate.

2.1 Hollow-Stem Augering

Outside diameters of hollow-stem augers generally range from 6.25 inches to 22 inches with corresponding inner diameters ranging from 2.25 inches to 13 inches. Auger lengths are usually 5 feet, which allows relatively easy handling. However, lengths of 10 or 20 feet may be used for deeper holes drilled with machines capable of handling the extended lengths. Formation samples can be taken in a number of ways, depending on the accuracy required. Cuttings may suffice for shallow depths but become less representative with depth, particularly below the water table. The most accurate samples are obtained with various coring devices, such as split spoons or shelby tubes, which can be used inside the augers. Continuous cores may be taken with a thin-walled tube that is inserted into the lowest auger and locked in place. The tube is retracted with a wire line and hoist after the hole has been advanced the length of the auger. A bottom plug in the cutting head or bit prevents cuttings from entering the augers until the first core sample is taken and the plug is knocked out.

In unconsolidated material, the augers serve as a temporary casing. Gravel-packed wells can be constructed inside the augers and then the augers are withdrawn. Well development is usually less difficult than with wells drilled by the mud rotary method because a bentonite drilling fluid is not normally used.

2.2 Cable Tool Drilling

Cable tool drilling is a percussion method in which a bit, attached to a weighted drilling string, is

alternately lifted and dropped. The drilling string, consists (bottom to top) of the drill bit, drill stem, drilling jars, socket, and wire cable. A walking beam on the drilling rig provides the lifting and dropping motion to the wire cable and hence to the drilling string. The repeated action breaks or loosens the formation material, which mixes with formation water, or water added to the borehole by the operator, to form a slurry. The slurry facilitates the removal of the cuttings, which are periodically removed from the hole with a bailer. In unconsolidated formations, steel casing must be driven or pushed into the ground as the drilling progresses in order to maintain the wall of the borehole and prevent collapse. A hardened steel drive shoe on the bottom end of the casing prevents damage during driving. A well may then be constructed inside the steel casing before the casing is pulled back. In consolidated formations, the casing may be driven through the weathered zone and seated in solid rock. The hole below the casing may remain open or may be fitted with a smaller diameter inner casing and screen, depending on the sampling requirements. Depending on formation material, extensive well development may often not be necessary.

2.3 Rotary Drilling

2.3.1 Mud Rotary Method

In the mud rotary method, the drill bit is rotated rapidly to cut the formation material and advance the borehole. The drill bit is attached to hollow drilling rods, which transfer power from the rig to the bit. In conventional rotary drilling, cuttings are removed by pumping drilling fluid (water, or water mixed with bentonite or other additives) down through the drill rods and bit, and up the annulus between the borehole and the drill rods. The drilling fluid flows into a mud pit where the cuttings settle out, and the "fluid" is pumped back down the drill rods. The drilling fluid cools and lubricates the bit and prevents the borehole from collapsing in unconsolidated formations.

Sampling may be done from the cuttings, but these types of samples are generally mixed and the amount of fine material may not be accurately represented. Coring may be done through the drill rods and bit, if a coring bit (with a center opening big enough to allow passage of the coring tube) is used. When drilling unconsolidated formations, a temporary surface or shallow casing may have to be installed in order to prevent cross-contamination, hole collapse, or wall erosion by the drilling fluid. Casing (riser pipe), screen, and gravel pack are usually installed in the open hole or through the surface casing. Once the well is constructed, extensive well development may be necessary in order to remove drilling fluid from the formation.

2.3.2 Air Rotary Method

The air rotary method uses air as the drilling fluid. Air is forced down the drill rods by an air compressor, escapes out of the bit and returns to the surface in the annular space between the hole wall and the drill string. Cuttings are moved out of the hole by the ascending air and collect around the rig. Cuttings are mixed and may not always be representative of the depth currently being drilled. In the conventional air rotary method, the drill string operates in a manner similar to that described for the mud rotary

system. In a "hammer" or "down-the-hole" air rotary method, the bit is pneumatically driven rapidly against the rock in short strokes while the drilling string slowly rotates. The use of air rotary methods are generally limited to consolidated and semi-consolidated formations. Casing is often used in semi-consolidated formations and through the weathered portion of consolidated formations to prevent hole collapse. In environmental work, the air supply must be filtered to prevent introduction of contamination (typically oil from the air compressor) into the borehole.

3.0 SAMPLE PRESERVATION, CONTAINERS, HANDLING, AND STORAGE

Often, a primary objective of the drilling program is to obtain representative lithologic or environmental samples. The most common techniques for retrieving samples are:

In unconsolidated formations:

- Split spoon sampling, carried out continuously or at discrete intervals during drilling
- Shelby tube sampling, when an undisturbed sample is required from clay or silt soils, especially for geotechnical evaluation or chemical analysis
- Cutting collection, when a general lithologic description and approximate depths are sufficient

In consolidated formations:

- Rock coring at continuous or discrete intervals
- Cutting collection, when a general lithologic description and approximate depths are sufficient

The amount of sample to be collected, the proper sample container (i.e., glass, plastic), chemical preservation, and storage requirements are dependent on the matrix being sampled and the parameter(s) of interest, and are discussed in ERT/SERAS SOP #2003, *Sample Storage, Preservation and Handling*.

4.0 INTERFERENCES AND POTENTIAL PROBLEMS

The advantages and disadvantages of the various drilling methods are summarized below.

4.1 Auger Drilling

The advantages of auger drilling are:

- Relatively fast and inexpensive
- Because augers act as temporary casing, drilling fluids are not used, resulting in reduced well development

The disadvantages of auger drilling are:

- Very slow or impossible to use in coarse materials such as cobble or boulders
- Cannot be used in consolidated formations and is generally limited to depths of approximately 100 feet below ground surface in order to be efficient

4.2 Cable Tool Drilling

The advantages of cable tool drilling are:

- Relatively inexpensive with minimum labor requirements
- Water table and water bearing zones are easily identified
- Driven casing stabilizes the open borehole and minimizes potential for cross-contamination
- Especially successful in caving formations or formations containing boulders
- Accurate formation samples can usually be obtained from cuttings

The disadvantages of cable tool drilling are:

- Extremely slow rate of drilling
- Necessity to drive casing may limit depth in large diameter holes.

4.3 Rotary Drilling

4.3.1 Mud Rotary Drilling

The advantages of mud rotary drilling are:

- Fast, typically more than 100 feet of borehole advancement per day
- Provides an open borehole, necessary for some types of geophysical logging and other tests

The disadvantages of mud rotary drilling are:

- Potential for cross-contamination of water-bearing zones
- Drill cuttings may be mixed and not accurately represent lithologies at a given drilling depth
- Drilling mud may alter the groundwater chemistry
- Water levels can only be determined by constructing wells
- Drilling mud may change local permeability of the formation and may not be entirely removed during well development
- Disposal of large volumes of drilling fluid and cuttings may be necessary if they are contaminated

4.3.2 Air Rotary Drilling

The advantages of air rotary drilling are:

- Fast, typically more than 100 feet of borehole advancement a day
- Preliminary estimates of well yields and water levels are often possible
- No drilling mud to plug the borehole

The disadvantages of air rotary drilling are:

- Generally cannot be used in unconsolidated formations
- In contaminated zones, the use of high-pressure air may pose a significant hazard to the drill crew because of transport of contaminated material up the hole
- Introduction of air to the groundwater could reduce concentration of volatile organic compounds

5.0 EQUIPMENT/APPARATUS

The following equipment is necessary for the site geologist:

- Metal clipboard box case (container for well logs)
- Ruler
- Depth sounder
- Water level indicator
- Health and safety gear
- Sample collection jars
- Trowels
- Description aids (Munsell color change, grain size charts, etc.)
- Field Logbook

Equipment and tools required for well installation are provided by the drilling contractor.

6.0 REAGENTS

Reagents are not required for preservation of soil samples. Samples should, however, be cooled to 4^0C and protected from sunlight in order to minimize degradation and any potential reaction due to the light sensitivity of the sample. Decontamination solutions are specified in ERT/SERAS SOP# 2006, *Sampling Equipment Decontamination*, and the site-specific work plan.

7.0 PROCEDURES

7.1 Preparation

All drilling and well installation programs must be planned and supervised by a licensed professional geologist/hydrogeologist.

The planning, selection and implementation of any monitor well installation program should include the following:

- Review existing data on site geology and hydrogeology including publications, air photos, water quality data, and existing maps. These may be obtained from local, state or federal agencies

- Assess site to determine potential access problems for drill rig, locate water supply sources, establish equipment storage area, and observe outcrops

- Perform utilities check, note location of underground utilities and of overhead electrical

wires

- Prepare a site-specific Health and Safety Plan (HASP)
- Select drilling, sampling and well development methods
- Determine well construction specifications (i.e., casing and screen materials, casing and screen diameter, screen length and screen interval, filter pack and screen slot size)
- Determine need for containing drill cuttings and fluids and their method of disposal
- Prepare the site-specific Work Plan (WP) including all of the above
- Prepare and execute the drilling contract

7.2 Field Preparation

Prior to mobilization, the drill rig and all associated equipment must be thoroughly decontaminated by a steam/pressure washer to remove all oil, grease, mud, etc. Before drilling each boring, all "down-the-hole" drill equipment should be steam cleaned and rinsed with potable water to minimize cross-contamination. Special attention should be given to the threaded section of the casings and to the drill rods. All drilling equipment must be steam-cleaned at completion of the project to ensure that no contamination is transported from the sampling site.

7.3 Well Construction

The well casing material should not interact with the groundwater. Well casings for environmental projects are usually constructed of polyvinyl chloride (PVC), Teflon, fiberglass, or stainless steel. Details of the construction methods are given in Sections 7.3.1 and 7.3.2.

7.3.1 Bedrock Wells

Wells installed in bedrock will be drilled using the air or mud rotary method. Crystalline rock wells are usually drilled most efficiently with the air rotary method while consolidated sedimentary formations are drilled using either the air rotary or mud rotary method. The compressed air supply will be filtered prior to introduction into the borehole to remove oil or other contaminants. Bedrock wells may be completed as an open-hole, providing that borehole cave-in is not a possibility.

Bedrock wells will be advanced with air or mud rotary methods until a minimum of 5 feet of competent rock has been drilled. Minimum borehole diameter will be 8 inches. The drill string will then be pulled from the borehole and 6-inch inner diameter (I.D.) Schedule 80 or 40 polyvinyl chloride (PVC) casing inserted. Portland cement/bentonite grout will be pumped through a tremie pipe (placed at the bottom of the borehole) into the annular space outside the casing. After the grout has set (minimum of 24 hours), the cement will be drilled out (if needed) and the borehole advanced to the desired depth. Figure 1 (Appendix A) shows typical construction details for an open-hole bedrock well.

The preferred method of well completion for the bedrock wells will be open-hole. However, if the open borehole is subject to cave-in, the well will be completed as a screened and cased sand-packed well. For details of completion, see Section 7.3.2.

7.3.2 Overburden Well Construction

Any of the drilling methods discussed in this SOP can be used to drill or set a well in the overburden. The hollow-stem augering method is the preferred choice for shallow (<100 feet total depth) overburden wells because the well can be constructed inside of the augers. Details of the construction are provided below and are shown in Figure 2 (Appendix A).

1. The screen slot size will be determined by the site geologist/hydrogeologist, based on the sand-pack size. The length of screen used will be site-dependent. Casing sections will be flush-threaded. Screw-threaded bottom plugs will be used. To prevent introduction of contaminants into the well, no glue-connected fittings will be used. Each piece of PVC pipe, screen, and the bottom plug will be steam-cleaned before lowering into the borehole. The site geologist/hydrogeologist is responsible for the supervision of all steam cleaning procedures.

2. The annular space between the well screen and the borehole wall will be filled with a uniform gravel/sand pack to serve as a filter media. For wells deeper than approximately 50 feet, or when recommended by the site geologist, the sand pack will be emplaced using a tremie pipe. A sand slurry composed of sand and potable water will be pumped through the tremie pipe into the annulus throughout the entire screened interval, and over the top of the screen. Allowance must be made for settlement of the sand pack.

3. The depth of the top of the sand will be determined using the tremie pipe and a weighted measuring tape, thus verifying the thickness of the sand pack. Additional sand shall be added to bring the top of the sand pack to approximately 2 to 3 feet above the top of the well screen.

   Under no circumstances should the sand pack extend into any aquifer other than the one to be monitored. In most cases, the well design can be modified to allow for a sufficient sand pack without threat of crossflow between producing zones through the sand pack.

4. For materials that will not maintain an open borehole using hollow-stem augers, the temporary or outer casing will be withdrawn gradually during placement of sand pack/grout. For example, after filling two feet with sand pack, the outer casing should be withdrawn 2 feet. This step of placing more sand and withdrawing the outer casing should be repeated until the level of the sand pack is approximately 3 feet above the top of the well screen. This ensures there is no locking of the permanent (inner) casing within the outer casing.

5. A bentonite seal of a minimum 2-foot vertical thickness will be placed in the annular space above the sand pack to separate the sand pack from the cement surface seal. The bentonite will be placed through a tremie pipe or poured directly into the annular space, depending upon the depth and site conditions. The bentonite will be pourable pellets. The geologist/hydrogeologist will record the start and stop times of the bentonite seal emplacement, the interval of the seal, the amount of bentonite used, and any problems that arise. The type of bentonite and the supplier will also be recorded.

   A cap placed over the top of the well casing, before pouring the bentonite pellets, will prevent pellets from entering the well casing.

6. If a slurry of bentonite is used as an annular seal, it is prepared by mixing powdered or granular bentonite with potable water. The slurry must be of sufficiently high specific gravity and viscosity to prevent its displacement by the grout to be emplaced above it. As a precaution (regardless of depth) and depending on fluid viscosity, a few handfuls of bentonite pellets may be added to solidify the bentonite slurry surface.

7. Cement and/or bentonite grout is placed from the top of the bentonite seal to the ground surface.

   Only Type I or II cement without accelerator additives may be used. An approved source of potable water must be used for mixing grout materials. The following mixes are acceptable:

   - Neat cement, a maximum of 6 gallons of water per 94 pound bag of cement
   - Granular bentonite, 1.5 pounds of bentonite per 1 gallon of water
   - Cement-bentonite, 5 pounds of pure bentonite per 94 pound bag of cement with 7-8 gallons of water.
   - Cement-bentonite, 6 to 8 pounds of pure bentonite per 94 pound bag of cement with 8-10 gallons of water, if water mixed
   - Non-expandable cement, mixed at 7.5 gallons of water to one half (½) teaspoon of Aluminum Hydroxide, 94 pounds of cement (Type I) and 4 pounds of bentonite
   - Non-expandable cement, mixed at 7 gallons of water to one half (½) teaspoon of Aluminum Hydroxide, and 94 pounds of cement (Type I and Type II)

8. Grout is pumped through a tremie pipe (normally a 1.25-inch PVC or steel pipe) to the bottom of the annulus until undiluted grout flows from the annulus at the ground surface.

9. In materials that will not maintain an open hole, the temporary steel casing should be withdrawn in a manner that prevents the level of grout from dropping below the bottom of the casing.

10. Additional grout may be added to compensate for the removal of the temporary

casing and the tremie pipe to ensure that the top of the grout is at or above ground surface. After the grout has set (about 24 hours), any depression due to settlement is filled with a grout mix similar to that described above.

11. The protective casing should now be set. The casing may be a 5 foot minimum length of black iron or galvanized pipe extending about 1.5 to 3 feet above the ground surface, and set in concrete or cement grout. The protective casing diameter should be at least 2 inches greater than the well casing. A 0.5-inch drain hole may be installed near ground level. A flush-mount protective casing may also be used in areas of high traffic or where access to other areas would be limited by a well stick-up.

12. A protective steel cap, secured to the protective casing by a padlock, should be installed.

13. Steel guard posts should be installed around the protective casing in areas where vehicle traffic may be a problem. Posts should have a minimum diameter of 3 inches and be a minimum of 4 feet high.

14. All monitor wells should be labeled and dated with paint or steel tags.

7.4 Well Development

Well development is the process by which the aquifer's hydraulic conductivity is restored by removing drilling fluids, and fine-grained formation material from newly installed wells. Two methods of well development that are commonly used are surging and bailing, and overpumping. A well is considered developed when the pH and conductivity of the groundwater stabilizes and the measured turbidity is <50 nephelometric turbidity units (NTUs).

Surging and bailing will be performed as follows:

1. Measure the total depth (TD) of the well and depth to water (DTW).

2. Using an appropriately sized surge block, surge 5-foot sections of well screen, using 10-20 up/down cycles per section. Periodically remove the surge block and bail accumulated sediment from the well, as required.

3. For open-hole wells, a 6-inch surge block will be used inside the cased portion of the well. Sediments will be bailed periodically, as required. Overpumping may be used in combination with surging and bailing for development of bedrock wells. The method(s) used will be based on field conditions encountered, and will be determined by the site geologist/hydrogeologist. However, sediment will initially be removed from the wells by bailing in order to minimize the volume of development water generated.

The pump used must be rated to achieve the desired yield at a given depth. The pump system should include the following:

- A check valve to prevent water from running back into the well when the pump is shut off
- Flexible discharge hose
- Safety cable or rope to remove the pump from the well
- Flow meter (measuring bucket or inline flow meter)
- Generator
- Amp meter, to measure electrical current (load)

The amp meter is used to monitor pump performance. If the pump becomes clogged, the amperage will increase due to stress on the pump. If the water level drops below the intake ports, the current will drop due to decreased resistance on the pump.

8.0 CALCULATIONS

To maintain an open borehole during rotary drilling, the drilling fluid must exert a pressure greater than the formation pore pressure. Typical pore pressures for unconfined and confined aquifers are 0.433 pounds per square inch per foot (psi/ft) and 0.465 psi/ft, respectively.

The relationship for determining the hydrostatic pressure of the drilling fluid is:

Hydrostatic Pressure (psi) Fluid Density (lb/gal) × Height of Fluid Column (ft) × 0.052

The minimum grout volume necessary to grout a well can be calculated using:

rout Vol. (ft 3) Vol. of Borehole (ft 3) Vol. of Casing (ft 3) L (r2B r 2

where:
L = length of borehole to be grouted (ft)
r_B = radius of boring (ft)
r_C = radius of casing (ft)

9.0 QUALITY ASSURANCE/QUALITY CONTROL

There are no specific quality assurance activities that apply to the implementation of these procedures. However, the following general QA procedures apply:

1. All data must be documented on standard well completion forms, field data sheets or within field/site logbooks.

2. All instrumentation must be operated in accordance with the operating instructions as provided by the manufacturer, unless otherwise specified in the work plan. Equipment checkout and calibration activities must occur prior to sampling/operation and must be documented.

10.0 DATA VALIDATION

This section is not applicable to this SOP.

11.0 HEALTH AND SAFETY

Drilling rigs and equipment present a variety of safety hazards. All personnel working around drilling rigs should know the position of the emergency "kill" switch. Wirelines and ropes should be inspected and frayed or damaged sections discarded. Swivels and blocks should turn freely. Gauges should be operational and controls clearly marked. All underground utilities should be clearly marked, and drillers should be aware of any overhead hazards such as power lines. Avoid drilling in these areas. Ear protection should be worn when working around drilling equipment for extended periods of time, particularly air rotary equipment. Failure to follow safety procedures or wear the proper personal protection gear, on the part of either the drilling crew or SERAS personnel, may result in dismissal from the job.

When working with potentially hazardous materials, follow U.S. EPA, Occupational Safety and Health Administration (OSHA), and corporate health and safety practices.

12.0 REFERENCES

American Society for Testing and Materials. 1991. Annual Book of ASTM Standards. Designation: D5092-90. *Standard Practice for Design and Installation of Groundwater Monitoring Wells in Aquifers.* Philadelphia, PA. p. 1081-1092.

Boateng, K., P.C. Evens, and S.M. Testa. 1984. "Groundwater Contamination of Two Production Wells: A Case History." *Groundwater Monitoring Review*, 4(2):24-31.

Keely, J.F. and Kwasi Boateng. 1987. "Monitoring Well Installation, Purging, and Sampling Techniques - Part 1: Conceptualizations." *Groundwater* 25(3):300-313.

Keely, J.F. and Kwasi Boateng. 1987. "Monitoring Well Installation, Purging, and Sampling Techniques - Part 2: Case Histories." *Groundwater* 25(4):427-439.

Driscoll, F.G. 1986. *Groundwater and Wells.* 2nd ed. Johnson Division, UOP Inc., St. Paul, MN. p. 1089

U.S. Environmental Protection Agency. 1987. *A Compendium of Superfund Field Operations Methods.* EPA/540/P-87/001. Office of Emergency and Remedial Response. Washington, DC.

American Society for Testing and Materials. 1991. Annual Book of ASTM Standards. Designation: D1586-84. *Split Barrel Sampling.* Philadelphia, PA.

13.0 APPENDICES

A - Figures

APPENDIX A
Figures
SOP #2048
July 2001

FIGURE 1. Typical Bedrock Well Construction

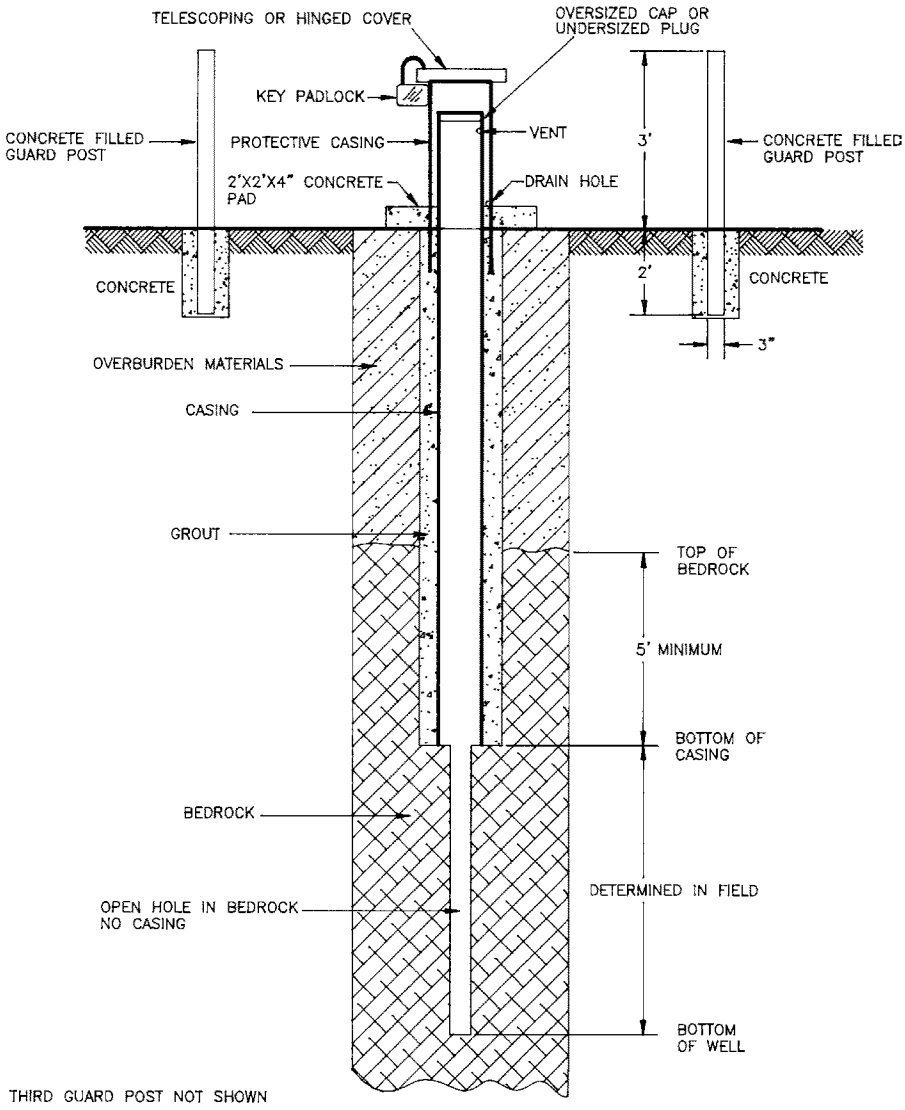

FIGURE 2. Typical Overburden Well Construction

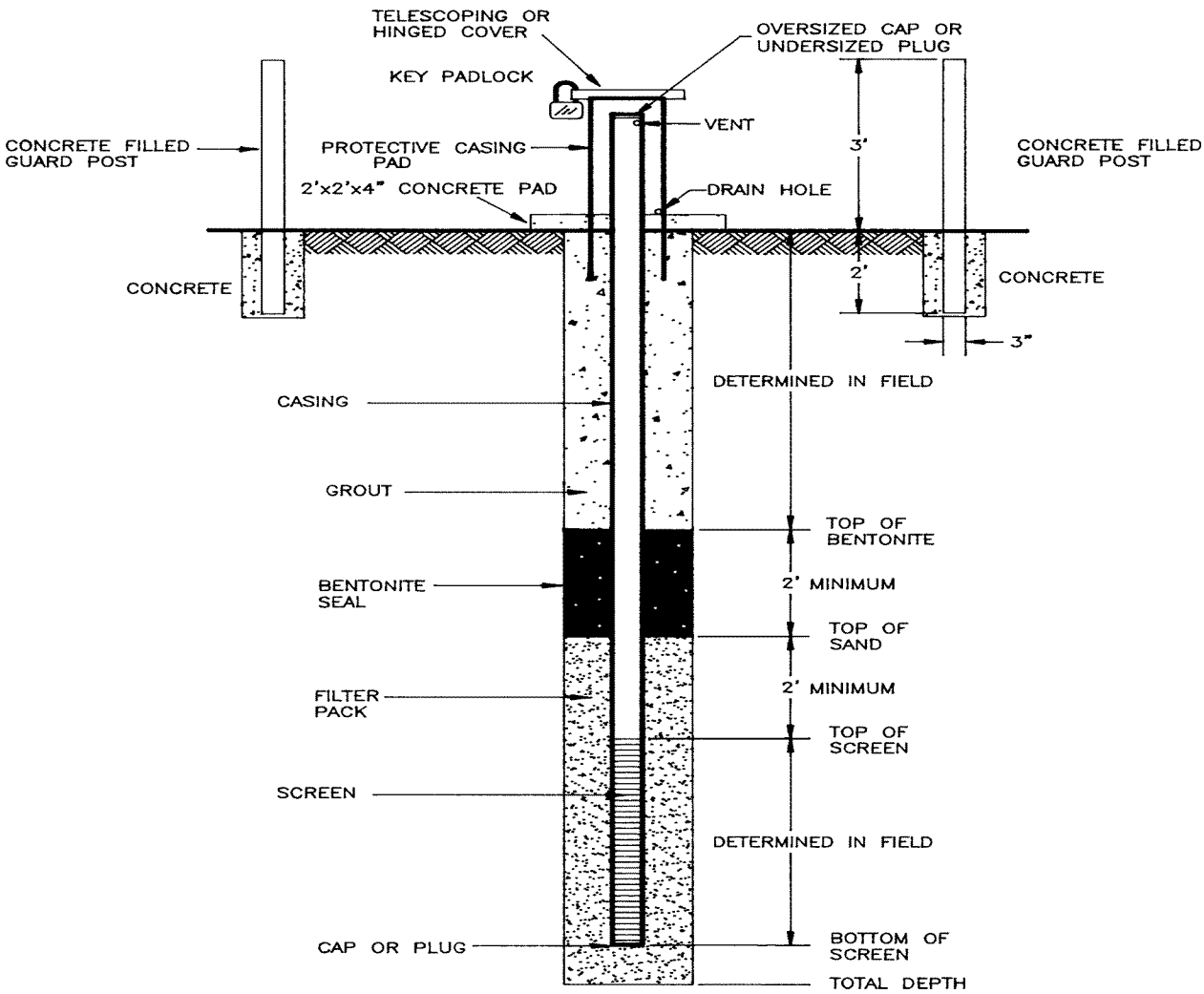

SECTION 5
SAMPLING DESIGN AND QUALITY ASSURANCE PROCEDURES

SECTION OBJECTIVES:

- Define planning and quality assurance elements that must be incorporated in all sampling operations.
- Define sampling site selections and collection procedures for individual media.
- Define sampling quality assurance procedures

5.1 Introduction

This section discusses the standard practices and procedures used by Branch personnel during field operations to ensure the collection of representative samples. Sampling activities conducted by field investigators are conducted with the expectation that information obtained may be used for enforcement purposes, unless specifically stated to the contrary in advance of the field investigation. Therefore, correct use of proper sampling procedures is essential. Collection of representative samples depends upon:

- Ensuring that the sample is representative of the material being sampled.
- The use of proper sampling, sample handling, preservation, and quality control techniques.

5.2 Definitions

Sample - part of a larger lot, usually an area, a volume, or a period of time.

Representative Sample - a sample that reflects one or more characteristics of a population.

Sample Representativeness - the degree to which a set of samples defines the characteristics of a population, where each sample has an equal probability of yielding the same result.

Variability - the range or "distribution" of results around the mean value obtained from samples within a population. There are three types of variability which must be measured, or otherwise accounted for in field sampling.

1. Temporal Variability

Temporal variability is the range of results due to changes in pollutant concentrations over time. An example would be the range of concentrations obtained for a given parameter in wastewater samples collected at different times from an outfall where pollutant concentrations vary over time.

ED_001670_00012770-00127

2. Spatial Variability

Spatial variability is the range of results due to changes in pollutant concentrations as a function of their location. An example would be the range of concentrations obtained for a given parameter in surface soil from a site where discrete "hot spots" are present due to localized releases of pollutants on otherwise uncontaminated soil.

3. Sample Handling Variability

Sample handling variability is the range of results due to the sample collection and handling by the sampler. This variability manifests itself as a positive bias due to errors such as unclean sampling equipment, cross contamination, etc., or a negative bias due to improper containers or sample preservation.

Accuracy - a measure of agreement between the true value and the measured value of a parameter.

Precision - measure of the agreement among repeated individual measurements of a sample.

Bias - consistent under or over-estimation of the true value due to sampling errors, sample handling errors, or analytical errors.

Grab Sample - an individual sample collected from a single location at a specific time, or period of time (i.e., within 15 minutes).

Composite Samples - a sample collected over a temporal or spacial range that typically consists of a series of discrete samples (or "aliquots") which are combined or "composited". Four types of composite samples are listed below:

1. Time Composite (TC) - a sample comprised of a varying number of discrete samples (aliquots) collected at equal time intervals during the compositing period. The TC sample is typically used to sample wastewater or streams.

2. Flow Proportioned Composite (FPC) - a sample collected proportional to the flow during the compositing period by either a time-varying/constant volume (TVCV) or time-constant/varying volume (TCVV) method. The TVCV method is typically used with automatic samplers that are paced by a flow meter. The TCVV method is a manual method that individually proportions a series of discretely collected aliquots. The FPC is typically used when sampling wastewater.

3. Areal Composite - sample composited from individual, equal aliquots collected on an areal or horizontal cross-sectional basis. Each aliquot is collected in an identical manner. Examples include sediment composites from quarter-point sampling of streams and soil samples from within grids.

4. Vertical Composite - a sample composited from individual, equal aliquots collected from a vertical cross section. Each aliquot is collected in an identical manner. Examples include vertical profiles of soil/sediment columns, lakes, and estuaries.

ED_001670_00012770-00128

Quality Control Samples

Quality control samples are collected during field studies to determine the performance of sample collection techniques. In general, the most common errors are caused by improper sampling, improper preservation, inadequate mixing during compositing and splitting of samples, and exceeding sample holding times.

The definitions for specific quality control samples are listed below:

Control Sample - typically a discrete grab sample collected to isolate a source of contamination. Isolation of a source could require the collection of both an upstream sample at a location where the medium being studied is unaffected by the site being studied, as well as a downstream control which could be affected by pollutants contributed from the site under study.

Background Sample - a sample (usually a grab sample) collected from an area, water body, or site similar to the one being studied, but located in an area known, or reasonably thought to be free from the pollutants of concern.

Split Sample - a sample which has been portioned into two or more containers from a single sample container or sample mixing container for analysis by separate laboratories. The primary purposes of a split sample is to measure sample handling variability, and to identify discrepancies in analytical techniques and procedures.

Duplicate Sample - are separate samples taken from the same source at the same time and in the same manner, and are analyzed in the same laboratory. These samples provide a check on the consistency of the sampling techniques used to collect the sample, and may also serve to estimate the variability of a given characteristic, or pollutant, associated with a source of the sample.

Trip Blanks - a sample which is collected either prior to, or during, the sampling event in the same container, preserved in the same manner as the sample, and is stored with the samples collected during the survey. They are packaged for shipment with the other samples and submitted for analysis. At no time after their preparation are trip blanks to be opened before they reach the laboratory. Trip blanks are used to determine if samples were contaminated during storage and/or transportation back to the laboratory (a measure of sample handling variability resulting in positive bias in pollutant concentration). If samples are to be shipped, trip blanks are to be provided with each shipment but not for each cooler.

Equipment Field Blanks - a sample collected using analyte-free water which has been passed through, or over sample collection equipment. These samples are used to determine if pollutants have been introduced by contact of the sample medium with sampling equipment. Equipment field blanks are often associated with collecting rinse blanks of equipment that has been field cleaned.

Temperature Blanks - a container of water shipped with each cooler of samples requiring preservation by cooling to 4 °C (wet ice). The temperature of the blanks is measured at the time of sample receipt by the laboratory. No temperature blank is necessary for samples designated as “waste”.

Field Blanks - a sample that is prepared in the field to evaluate the potential for

ED_001670_00012770-00129

contamination of a sample by site pollutants from a source not associated with the sample collected (for example air-borne dust or organic vapors which could contaminate a soil sample). Analyte-free water is taken to the field in sealed containers or generated on-site. The water is poured into the appropriate sample containers at pre-designated locations at the site. Field blanks should be collected in dusty environments and/or from areas where volatile organic contamination is present in the atmosphere and originating from a source other than the source being sampled.

Material Blanks - samples of sampling materials (e.g., material used to collect wipe samples, etc.), construction materials (e.g., well construction materials), or reagents (e.g., organic/analyte free water generated in the field, water from local water supplies used to mix well grout, etc.) collected to measure any positive bias from sample handling variability.

Wipe Sample Blanks - a sample of the material used for collecting wipe samples. The material is handled, packaged, and transported in the same manner as all other wipe samples with the exception that it is not exposed to actual contact with the sample medium.

5.3 Sampling Design

5.3.1 Introduction

Development of a sampling design may follow the steps outlined in the EPA publications, "US EPA Region 2 - Guidance for the Development of Quality Assurance Project Plans for Environmental Monitoring Projects", dated April 12, 2004, EPA Requirements for Quality Assurance Project Plans, EPA QA/R-5, EPA/240/B-01/003, EPA Guidance for Quality Assurance Project Plans, EPA QA/G-5, EPA/240/R-02-009. Other EPA guidance documents available include: "Guidance for the Data Quality Objectives Process - EPA QA/G-4", and "Data Quality Objectives process for Hazardous Waste Site Investigations - EPA QA/G-4HW". The Data Quality Objectives (DQOs) process is a logical step-by-step method of identifying the study objective, defining the appropriate type of data to collect, clarifying the decisions that will be based on the data collected, and considering the potential limitations with alternate sampling designs.

Investigations may be executed without completing the DQO process step-by-step; however, the basic elements of the DQO process should be considered by the project leader for each investigation. Sampling designs are typically either non-probabilistic (authoritative sampling designs) or probabilistic (random sampling designs) in nature. The sampling design ultimately must meet specific study objectives. The location and frequency of sampling (number of samples) should be clearly outlined in the sampling design, as well as provisions for access to all areas of the site, the use of special sampling equipment, etc. Development of the sampling design in the context of DQOs and sampling optimization are discussed in the ASTM documents "Standard Practice for Generation of Environmental Data Related to Waste Management Activities: Development of Data Quality Objectives", and "Standard Guide for the Generation of Environmental Data Related to Waste Management Activities: Quality Assurance and Quality Control Planning and Implementation".

ED_001670_00012770-00130

5.3.2 Representative Sampling

A "representative sample" is often defined as a sample that reflects one or more characteristics of the population being sampled. For example, the characteristic which is desired to be reflected by the sample may be the average, minimum, or maximum concentration of a constituent of concern. Ultimately, a representative sample is defined by the study objectives. For instance, the objective of the study may be to determine the maximum concentration of lead in the sludge from a surface impoundment. One sample collected near the inlet to the impoundment may provide that information. The collection of a representative sample may be influenced by factors such as equipment design, sampling techniques, and sample handling.

5.3.3 Stratification and Heterogeneous Wastes

Environmental media, as well as waste matrices, can be stratified, i.e., different portions of the population, which may be separated temporally or spatially, may have similar characteristics or properties which are different from adjacent portions of the population. An example would be a landfill that contains a trench which received an industrial waste contaminated with chromium. The trench would be considered a stratum within the landfill if chromium was the pollutant of concern. A special case, "stratification by component", is often observed with waste matrices when the constituent of interest is associated with one component of the matrix. An example would be slag contaminated with lead that is mixed with otherwise uncontaminated fire brick. Thus the lead is stratified by component, that being the slag. Stratified sampling designs are discussed later which incorporate independent sampling of each strata, thereby reducing the number of samples required. Some environmental and waste matrices can be, for purposes of the field investigation, homogeneous (for instance the surface water in a limited segment of a small stream). If the composition of the matrix and the distribution of pollutants are known, or can be estimated, less sampling may be necessary to define the properties of interest. An estimate of the variability in pollutant distribution may be based on knowledge, or determined by preliminary sampling. The more heterogeneous the matrix, the greater the planning and sampling requirements.

A population could also have very localized strata or areas of contamination that are referred to as "hot spots". Specific procedures for hot spot identification and characterization are available in Statistical Methods for Environmental Pollution Monitoring.

5.3.4 Specific Sampling Designs

Sampling strategies used by the Section typically fall into two general groups: **authoritative** or **probabilistic**. Authoritative (also known as directed, subjective, and/or biased) approaches typically rely on the judgement and experience of the investigators, as well as available information on the matrix of concern. Probabilistic, or "statistical" approaches may be appropriate when estimates on uncertainty and specific confidence levels in the results are required. The probabilistic approaches include: simple random sampling, stratified random sampling, and systematic grid sampling. The main feature of a probabilistic approach is that each location at the site has an equal probability of being sampled, therefore statistical bias is minimized. Professional judgement should always be used to develop both authoritative and probabilistic sampling designs.

ED_001670_00012770-00131

5.3.5 Determining the Number of Samples to Collect

The number of samples to collect as part of a sampling design will typically be based on several factors, e.g., the study objectives, properties of the matrix, degree of confidence required, access to sampling points, and resource constraints. Practical guidance for determining the number of samples is included in several documents including the ASTM document Standard Guide for General Planning of Waste Sampling, the US-EPA document Characterization of Hazardous Waste Sites - A Methods Manual, Volume 1 - Site Investigations, the US-EPA document Guidance of Choosing a Sampling Design for Environmental Data Collection and Statistical Methods for Environmental Pollution Monitoring by Richard O. Gilbert.

5.3.6 Authoritative Sampling

Authoritative sampling is based on the judgement of the investigator, and does not necessarily result in a sample that reflects the average characteristics of the entire matrix. There are two types of authoritative designs: judgmental sampling and biased sampling. Judgmental sampling uses the knowledge and experience of the investigator to attempt to derive “average” conditions at a site. In contrast, biased sampling attempts to determine the maximum or minimum value for pollutant of concern. Biased sampling often focuses on "worst case" conditions in a matrix, for example, the most visually contaminated area or the most recently generated waste. The primary advantages of authoritative sampling are the designs tend to be quick and simple to implement, and the designs have relatively low costs. Authoritative sampling is ideally suited for sites where pollutants of concern greatly exceed, or are significantly below, predetermined action levels. Because the experience of the investigator is often the basis for sample collection, personal bias (depending on the study objectives) may be introduced and should be recognized as a potential problem. However, preliminary or screening investigations, and certain regulatory investigations, will correctly employ authoritative sampling.

5.3.7 Simple Random Sampling

Simple random sampling insures that each element in the population has an equal chance of being included in the sample. This is often be the method of choice when, for purposes of the investigation, the matrix is considered homogeneous, or when the population is randomly heterogeneous. If the population contains trends or patterns of contamination, a stratified random sampling or systematic grid sampling strategy would be more appropriate.

5.3.8 Systematic Sampling over Time or Space

Systematic sampling over time at the point of generation is useful if the material was sampled from a wastewater sewer, a materials conveyor belt, or being delivered via truck or pipeline. The sampling interval would be determined on a time basis, for example every hour from a conveyor belt or pipeline discharge, or from every third truck load. Systematic sampling over space might involve the collection of samples at defined intervals from a ditch, stream, or other matrix that is spatially unique.

5.3.9 Stratified Random Sampling

Stratified random sampling may be useful when distinct strata or "homogeneous sub-groups" are

ED_001670_00012770-00132

identified within the population. The strata could be located in different areas of the population, or the strata may be comprised of different layers. This approach is useful when the individual strata may be considered internally homogeneous, or at least have less internal variation, in what would otherwise be considered a heterogeneous population. Information on the site is usually required to establish the location of individual strata. A grid may be utilized for sampling several horizontal layers if the strata are horizontally oriented. A simple random sampling approach is typically utilized for sample collection within each strata. The use of a stratified random sampling strategy may result in the collection of fewer samples.

5.3.10 Systematic Grid Sampling

Systematic grid sampling involves the collection of samples at fixed intervals when the contamination is assumed to be randomly distributed. This method is commonly used with populations when estimating trends or patterns of contamination. This approach may not be acceptable if the entire population is not accessible, or if the systematic plan becomes "phased" with variations in the distribution of pollutants within the matrix. This approach may also be useful for identifying the presence of strata within the population. The grid and starting points should be randomly laid out over the site, yet the method allows for rather easy location of exact sample locations within each grid. Also, the grid size would typically be adjusted according to the number of samples that are required.

5.3.11 Adaptive Cluster Sampling

Adaptive sampling designs are ones in which additional decisions units or sample locations are selected depending on the interpretation of measurements or observations made during an initial survey. Additional sample locations are selected when a pollutant of concern in one or more units exceeds some predetermined action level in the initial survey. Adaptive cluster sampling is a beneficial design for sites where a pollutant of concern is sparsely distributed but highly concentrated. Simple random or systematic grid sampling can be used in conjunction with adaptive cluster sampling designs.

5.4 General Considerations for Sampling Designs

Prior to commencing work on any project, the objective of the study in terms of the purpose the data generated is to serve should be known. Some examples of uses for which data are generated include:

- RCRA waste identification investigations;
- RCRA screening investigations (presence or absence of pollutants);
- Surface water and sediment studies;
- Wastewater treatment plant evaluations;
- Monitoring investigations, and
- Special environmental characterization investigations.

ED_001670_00012770-00133

The purpose of data collection is to meet the objectives of the investigation. The process of designing an investigation typically follows a logical series of steps. Proper evaluation of these steps will greatly enhance the project leader's ability to choose a design which adequately serves the purpose of the study. The DQO process may not be strictly followed, but the elements of the process are always considered during study planning. These elements include:

- State the environmental problem;
- Collection of information concerning historical data, site survey, and site history;
- Identification of the decision to be made with the data collected;
- Identification of data gaps;
- Identification of objectives, and investigation boundaries;
- Sampling design selection and design optimization;
- Sample types and number;
- Analytical requirements and limitations; and
- Data interpretation and assessment.

5.5 Soil Sampling Designs

The objectives of a soil sampling investigation must be clearly defined in terms of the purpose of the data generated. A discussion of study planning elements that include considerations specific to soil investigations follows.

5.5.1 Historical Sampling Data, Site Survey, and Site History

Investigations that are used for initial site screening purposes are one of the few cases where historical sampling data is usually not available. In this case, the purpose of the sampling effort is to determine the presence/absence of pollutants and if present, to determine their nature. Such a purpose can be served with a minimum of samples whose locations can be determined from a site survey and a review of the site history. When designing a soil sampling study for purposes other than site screening, a record of previous sampling efforts is usually available from which a relatively sound foundation of historical sampling data can be derived. The site survey is invaluable for soil sample design. Information which should be obtained during a site survey includes:

- General site layout;
- Site access;
- Soil types and depths;
- Surface water drainage pathways;

ED_001670_00012770-00134

- Existing site conditions;
- Visible staining of surface soil;
- Vegetation stress; and
- Possible offsite or non-site related sources.

The site history should include factors such as previous land use both on and nearby the site, types of industrial operations conducted both on the site and on adjoining property, types of pollutants to which the site has been exposed, and locations of possible dumping/burial areas. The site history can be derived from property plots, tax records, aerial photos, and interviews with people familiar with the site. Secondary Data is discussed in section 5.10.3.

5.5.2 Data Quality Objectives (DQOs)

Consideration of the purpose which the data generated from the soil sampling effort is to serve drives the selection of DQOs. DQO selection will then be the main factor which determines the types of samples to be collected, the types of equipment to be used, and the analytical requirements for the samples.

5.5.3 Authoritative Designs for Soil Investigations

When the purpose of the investigation is to determine the presence of pollutants, a simple strategy can be used. Such a purpose is normally encountered during screening inspections, criminal investigations, and any other project where the scope is limited to gathering evidence of contamination. These cases are normally characterized by a lack of previous sampling data, thereby requiring that sample types and locations be determined by site history and a site survey. In these instances, an authoritative design is normally used.

Authoritative sampling usually involves a limited number of locations (10 to 15) from which grab samples are collected. Locations are selected where there is a good probability of finding high levels of contamination. Examples may include areas where significant releases or spillage occurred according to the site history or areas of visible staining, stressed vegetation, or surface drainage are noted in the site survey. An authoritative design usually involves the selection of at least one or two control sampling locations to measure possible pollutants migrating onto the site from adjacent sources not involved in the study. The selection of control locations is similar to the selection of other sampling locations, except that upstream or upgradient control samples are expected to be unaffected by site pollutants. Because of the biased nature of an authoritative design, the degree of representativeness is difficult to estimate. Authoritative samples are not intended to reflect the average characteristics of the site. Since determining representativeness is not an issue with this type of design, duplicate samples designed to estimate variability are not normally collected. However, some split samples may be collected to measure sample handling variability.

An interactive approach may be used in an authoritative design to determine the extent of contamination on a site when the source can be identified. Samples are typically collected using a pattern that radiates outward from the source. The direction of pollutant migration may not be known, which will result in the collection of more samples, and in this case field screening would be desirable to help in determining appropriate sampling locations.

ED_001670_00012770-00135

5.5.4 Systematic Grid Sampling Designs for Soil Investigations

In cases where both the presence of pollutants and the extent of contamination needs to be determined, an authoritative design is inappropriate as site variability cannot be estimated without collecting an inordinate number of samples. A systematic design is normally used during investigations when determining the extent of contamination, such as remedial investigations and removal actions. Once a site has reached the stage where the extent of contamination becomes an issue, access to data from previous sampling efforts (screening investigations) which used an authoritative design is normally available. The Section is not normally involved in this aspect of the soil investigation, which would usually be conducted under Superfund.

5.6 Ground Water Sampling Designs

Sampling design, as it pertains to ground water, often involves the use of some form of temporary well point or direct push technology (DPT) for rapid in-field screening and plume delineation. These techniques are discussed in Section 6. Samples obtained using these techniques are usually analyzed immediately, using an on-site field laboratory, or are sent to an off-site laboratory for quick turnaround analyses.

5.6.1 Typical Ground Water Screening Devices

Listed below are numerous tools, devices, and techniques available to field investigators that can be used to effectively collect ground water samples for rapid field screening.

Temporary wells - Well casing can be installed temporarily, either inside hollow-stem augers or in an open hole after removal of hollow- or solid-stem augers. Because of the potential for cross-contamination between vertical intervals, this technique is appropriate only for screening the upper portion of the saturated zone. Samples are pumped or bailed directly from the well casing. Because turbidity is likely to be a problem using this technique, care should be taken when using the samples for metals screening. Depth of the investigation is limited only by the capability of the drill rig and cross-contamination considerations.

- Geoprobe® - Slotted steel pipe is hydraulically pushed or hammer driven to the desired sampling depth. Samples are usually acquired with a peristaltic pump. The device is subject to cross-contamination at threaded rod joints. It requires some knowledge of the saturated interval. The Geoprobe® is most useful at depths less than 30 to 40 feet below ground surface.

- Hydropunch® – A larger, more versatile device, similar to the Geoprobe®, which is pushed to sampling depths with a drill rig. It requires some knowledge of saturated intervals to use successfully. Depths of investigation with this technology are roughly correlated to the capability of the drill rig used to push the sampling device.

- Hydrocone® – This is a pressure-sealed sampling device that is hydraulically pushed to the desired sampling depth. It is capable of collecting a discrete sample from any depth at which it can be pushed. A limited volume of about 700 ml is collected and is generally turbid. This technique is mainly applicable for the screening for volatile organic compounds. A temporary well point can be driven by the same drill rig to collect samples with greater volume requirements. Samples from depths exceeding 100 feet

ED_001670_00012770-00136

have been obtained with this device. Routine depths obtained without special anchoring are generally within the 50-foot range, but are dependent on the geological materials being encountered.

5.7 Surface Water and Sediment Sampling Designs

5.7.1 Sampling Site Selection

The following factors should be considered in the selection of surface water and sediment sampling locations:

- Study objectives;
- Water use;
- Point source discharges;
- Nonpoint source discharges;
- Tributary locations;
- Changes in stream characteristics;
- Type of stream bed;
- Depth of stream;
- Turbulence;
- Presence of structures (weirs, dams, etc.);
- Accessibility; and
- Tidal effect (estuarine).

If the study objective is to investigate a specific water use such as a source of water supply, recreation, or other discrete use, then considerations such as accessibility, flow, velocity, physical characteristics, etc., are not critical from a water quality investigation standpoint. If the objective of a water quality study is to determine patterns of pollution, provide data for mathematical modeling purposes, conduct assimilative capacity studies, etc., where more than a small area or short stream reach is to be investigated, then several factors become interrelated and need to be considered in sampling location selection.

Before any sampling is conducted, an initial reconnaissance should be made to locate suitable sampling locations. Bridges and piers are normally good choices as sampling sites since they provide ready access and permit water sampling at any point across the width of the water body. However, these structures may alter the nature of water flow and thus influence sediment deposition or scouring. Additionally, bridges and piers are not always located in desirable locations with reference to waste sources, tributaries, etc. Wading for water samples in lakes, ponds, and slow-moving rivers and streams must be done with caution since bottom deposits are

ED_001670_00012770-00137

easily disturbed, thereby resulting in increased sediments in the overlying water column. On the other hand, wadeable areas may be best for sediment sampling. In slow-moving or deep water, a boat is usually required for sampling. Sampling station locations can be chosen without regard to other means of access if the stream is navigable by boat, especially in estuarine systems where boats frequently provide the only access to critical sampling locations.

Fresh water environments are commonly separated into two types:

- Flowing water, including rivers, creeks, and small to intermittent streams; and
- Water that is contained, with restricted flow including lakes, ponds, and manmade impoundments

Since these waterways differ considerably in general characteristics, site selection must be adapted to each. Estuarine environments are a special case and are discussed separately.

5.7.2 Rivers, Streams, and Creeks

In the selection of a surface water sampling sites in rivers, streams, or creeks, areas that exhibit the greatest degree of cross-sectional homogeneity should be located. When available, previously collected data may indicate if potential sampling locations are well mixed or vertically or horizontally stratified. Since mixing is principally governed by turbulence and water velocity, the selection of a site immediately downstream of a riffle area will insure good vertical mixing. These locations are also likely areas for deposition of sediments since the greatest deposition occurs where stream velocities decrease provided that the distance is far enough downstream from the riffle area for the water to become quiescent. Horizontal (cross-channel) mixing occurs in constrictions in the channel, but because of velocity increases, the stream bottom may be scoured, and therefore, a constriction is a poor location to collect sediment. Typical sediment depositional areas are located:

- Inside of river bends;
- Downstream from islands;
- Downstream from obstructions; and
- Areas of flow reversals, such as back-shoots.

Sites that are located immediately upstream or downstream from the confluence of two streams or rivers should generally be avoided since flows from two tributaries may not immediately mix, and at times due to possible backflow can upset the depositional flow patterns. When several locations along a stream reach are to be sampled, they should be strategically located:

- At the same locations if possible, when the data collected is to be compared to a previous study.
- At intervals based on time-of-water-travel, not distance, e.g., sampling stations may be located about one-half day time-of-water-travel for the first three days downstream of a waste source (the first six stations) and then approximately one day through the remaining distance.
- Whenever a marked physical change occurs in the stream channel. Example: A

ED_001670_00012770-00138

stream reach between two adjacent stations should not include both a long rapids section of swift shallow water with a rocky bottom, and a long section of deep, slow-moving water with a muddy bottom. Stations at each end of the combined reach would yield data on certain rates of change, such as reaeration, that would be an unrealistic average of two widely different rates. The actual natural characteristics of the stream would be better defined by inserting a third sampling station within the reach, between the rapids and the quiet water sections.

- To isolate major discharges as well as major tributaries. Dams and weirs cause changes in the physical characteristics of a stream. They usually create quiet, deep pools in river reaches that previously were swift and shallow. Such impoundments should be bracketed with sampling stations. When time-of-water-travel through the pools are long, stations should be established within the impoundments.

Some structures, such as dams, permit overflow and cause swirls in streams that accomplishes significant reaeration of oxygen deficient water. In such cases, stations should be located short distances upstream and downstream from the structures to measure the rapid, artificial increase in dissolved oxygen, which is not representative of natural reaeration.

When major changes occur in a stream reach, an upstream station, a downstream station, and an intermediate station should be selected. Major changes may consist of:

- A wastewater discharge;
- A tributary inflow;
- Non-point source discharge (farms or industrial sites); and
- A significant difference in channel characteristics.

The use of three stations is especially important when rates of change of unstable constituents are being determined. If results from one of only two stations in a subreach are in error for some unforeseen reason, it may not be possible to judge which of the two sets of results indicate the actual rate of change. Results from at least two of three stations, on the other hand, may support each other and indicate the true pattern of water quality in the subreach.

To determine the effects of certain discharges or tributary streams on ambient water quality, stations should be located both upstream and downstream from the discharges. In addition to the upstream and downstream stations bracketing a tributary, a station should be established on the tributary at a location upstream and out of the influence of the receiving stream.

Unless a stream is extremely turbulent, it is nearly impossible to measure the effect of a waste discharge or tributary immediately downstream from the source. Inflow frequently "hugs" the stream bank due to differences in density, temperature, and specific gravity, and consequently lateral (cross-channel) mixing does not occur for some distance.

Tributaries should be sampled as near the mouth as feasible. Frequently, the mouths of tributaries are accessible by boat. Care should be exercised to avoid collecting water samples from stratified locations which are due to differences in density resulting from temperature, dissolved solids, or turbidity.

ED_001670_00012770-00139

Actual sampling locations will vary with the size of the water body and the mixing characteristics of the stream or river. Generally, for small streams less than 20 feet wide, a sampling site should be selected where the water is well mixed. In such cases, a single grab sample taken at mid-depth at the center of the channel is adequate to represent the entire cross-section. A sediment sample could also be collected in the same vicinity if available.

For slightly larger streams, at least one vertical composite should be collected from mid-stream. Samples should be collected just below the surface, at mid-depth, and just above the bottom. For larger streams and rivers, at least quarter point (1/4, ½, and 3/4 width) composite samples should be collected. Dissolved oxygen, pH, temperature, and conductivity should be measured from each aliquot of the vertical composite.

For large rivers, several locations across the channel width should be sampled. Vertical composites across the channel width should be located in a manner that is roughly proportional to flow, i.e., they should be closer together toward mid-channel, where most of the flow is, than toward the banks, where the proportion of total flow is less. The number of vertical composites required and the number of depths sampled for each are usually determined in the field by the investigators. This determination is based on a reasonable balance between the following two considerations:

- The larger the number of subsamples, the more closely the composite sample will represent the water body; and
- Subsample collection is time-consuming and expensive, and increases the chance of cross-contamination.

In most circumstances, a number of sediment samples should be collected along a cross-section of a river or stream in order to adequately characterize the bed material. A common procedure is to sample at quarter points along the cross-section. When the sampling technique or equipment requires that the samples be extruded or transferred on site, they may be combined into a single composite sample. However, samples of dissimilar composition should not be combined but should be stored for separate analysis in the laboratory. Often, sediment must be collected in back-shoots or areas on the inside of bends in the stream due to scouring in the main channel.

5.7.3 Lakes, Ponds, and Impoundments

Lakes, ponds, and impoundments have a much greater tendency to stratify than rivers and streams. The relative lack of mixing generally requires that more samples be obtained. Occasionally, an extreme turbidity difference may occur where a highly turbid river enters a lake. For these situations, each layer of the vertically stratified water column needs to be considered. Since the stratification is caused by water temperature differences, the cooler, more dense river water is beneath the warmer lake water. A temperature profile of the water column as well as visual observation of lake samples can often detect the different layers which can be sampled separately.

The number of water sampling stations on a lake, pond, or impoundment will vary with the objective of the investigation as well as the size and shape of the basin. In ponds and small impoundments, a single vertical composite at the deepest point may be sufficient. Dissolved oxygen, pH, and temperature are generally measured for each vertical composite aliquot. In naturally-formed ponds, the deepest point is usually near the center; in impoundments, the deepest point is usually near the dam. In lakes and larger impoundments, several vertical

ED_001670_00012770-00140

subsamples should be composited to form a single sample. These vertical sampling locations are often collected along a transect or grid. The number of vertical subsamples and the depths at which subsamples are taken are usually at the discretion of the field investigators. In some cases, it may be of interest to collect separate composites of epilimnetic and hypolimnetic zones (above and below the thermocline or depth of greatest temperature change).

In lakes with irregular shapes and with several bays and coves that are protected from the wind, additional separate composite samples may be needed to adequately determine water quality. Similarly, additional samples should be collected where discharges, tributaries, land use characteristics, etc., are suspected of influencing water quality.

When collecting sediment samples in lakes, ponds, and reservoirs, the sampling site should be approximately at the center of the water mass. This is particularly true for reservoirs that are formed by the impoundment of rivers or streams. Generally, the coarser grained sediments are deposited near the headwaters of the reservoir, and the bed sediments near the center of the water mass will be composed of fine-grained materials. The shape, inflow pattern, bathymetry, and circulation must be considered when selecting sediment sampling sites in lakes or reservoirs.

5.7.4 Estuarine Waters

Estuarine areas are zones where inland freshwaters (both surface and ground) mix with oceanic saline waters. Estuaries are generally categorized into three types, dependent upon freshwater inflow and mixing properties:

- Mixed estuary -- Characterized by an absence of vertical halocline (gradual or no marked increase in salinity in the water column) and a gradual increase in salinity seaward. Typically this type of estuary is found in major freshwater sheetflow areas, featuring shallow depths.

- Salt wedge estuary -- Characterized by a sharp vertical increase in salinity and channelized freshwater inflow into a deep estuary. In these estuaries, the vertical mixing forces cannot override the density differential between fresh and saline waters. In effect, a salt wedge tapering inland moves horizontally, back and forth, with the tidal phase.

- Oceanic estuary -- Characterized by salinities approaching full strength oceanic waters. Seasonally, freshwater inflow is small with the preponderance of the fresh and saline water mixing occurring near, or at, the shore line.

A reconnaissance investigation should be conducted for each estuarine study unless prior knowledge of the estuarine type is available. The reconnaissance should focus upon the freshwater and oceanic water dynamics with respect to the study objective. National Oceanic Atmospheric Administration (NOAA) tide tables and United States Geological Survey (USGS) freshwater surface water flow records provide valuable insights into the estuary hydrodynamics. The basic in-situ measurement tools for reconnaissance are:

- Boat;

- Recording fathometer;

- Salinometer;

ED_001670_00012770-00141

- Dissolved oxygen meter; and
- Global Positioning System (GPS) equipment and charts.

These instruments coupled with the study objective or pollution source location, whether it is a point or non-point source problem, provide the focus for selecting sampling locations. More often than not, preplanned sampling locations in estuarine areas are changed during the actual study period. Because of the dynamics of estuaries, the initial sampling results often reveal that the study objective could be better served by relocating, adding, or deleting sampling locations.

Water sampling in estuarine areas is normally based upon the tidal phases, with samples collected on successive slack tides. All estuarine sampling should include vertical salinity measurements at one to five-foot increments coupled with vertical dissolved oxygen and temperature profiles. A variety of water sampling devices are used, but in general, the Van Dorn (or similar type) horizontal sampler or peristaltic pump are suitable. Samples are normally collected at mid-depth in areas where the depths are less than 10 feet, unless the salinity profile indicates the presence of a halocline (salinity stratification). In that case, samples are collected from each stratum. Depending upon the study objective, when depths are greater than 10 feet, water samples may be collected at the one-foot depth from the surface, mid-depth, and one-foot from the bottom. Generally, estuarine investigations are two phased, with study investigations conducted during wet and dry periods. Depending upon the freshwater inflow sources, estuarine water quality dynamics cannot normally be determined by a single season study.

5.7.5 Control Stations

In order to have a basis of comparison of water quality, the collection of samples from control stations is always necessary. A control station upstream from the waste source is as important as are stations down gradient, and should be chosen with equal care to ensure representative results. In some situations it is desirable to have background stations located in similar, nearby estuaries which are not impacted by the phenomena or pollutants being investigated. At times it may be desirable to locate two or three stations downstream from the waste inflow to establish the rate at which the unstable material is changing. The time of water-travel between the stations should be sufficient to permit accurate measurement of the change in the constituent under consideration.

5.8 Waste Sampling Designs

5.8.1 Introduction

Waste sampling involves the collection of materials that are typically generated from industrial processes, and therefore may contain elevated concentrations of hazardous constituents. Waste sampling in its broadest term is conventionally considered to be sampling of processed wastes or man-made waste materials. Because of the regulatory, safety, and analytical considerations, wastewater sampling should be separate from waste sampling. Environmental sampling is also different from waste sampling as it involves the collection of samples from natural matrices such as soil, sediment, groundwater, surface water, and air. It is convenient to distinguish waste management units into two types due to Branch safety protocols. The first, "open units", are units where wastes are generated, stored, or disposed, and would be open to the environment and environmental influences. Examples of open waste units are surface impoundments and waste piles. "Closed units" are waste containers/drums, tanks, or sumps where the potential for the accumulation of toxic vapors or explosive/ignitable gases exists. While both open and closed

ED_001670_00012770-00142

waste units are considered dangerous because of the potential exposure to concentrated hazardous constituents, closed units are regarded as high hazards due to their potential to accumulate gases and vapors.

5.8.2 Waste Investigation Objectives

Systematic planning is critical for identifying a study's objectives and conducting a successful investigation. Thorough understanding of the waste generation/management practices is required for the samples and associated data to reflect the waste population characteristic(s) of interest. Prior to sampling wastes, it is extremely important to obtain and assess all of the available information, e.g., waste generation process(es), waste handling and storage practices, previous field screening results, existing sampling and analytical data, any pertinent regulations, and permitting or compliance issues.

Common objectives in waste sampling investigations include:

- to determine if a constituent is present in a waste,
- to determine if a waste exhibits a property or characteristic,
- to determine if a material is a hazardous waste,
- to characterize a wastestream, and
- to determine if a waste material has been released into the environment.

The most frequently used objective during RCRA Case Development/Investigation Evaluations and Criminal Field Investigations involve hazardous waste determinations. For studies that are designed to determine if a release has occurred, it is recommended that samples be collected from the source as well as both the affected and the unaffected media. Waste matrices are frequently heterogenous in nature due to the physical characteristics of the material (particle size, viscosity, etc.), the distribution of hazardous constituents within the matrix, or the manner in which the material has been managed or disposed. When waste is comprised of strata that can be separated by the sampling equipment (e.g., liquid-liquid or liquid-solid phases), it is not necessary to collect a sample that is representative of the entire unit to make a waste determination. An acceptable objective would be to make a waste determination on a specific strata. For example in drums containing a liquid phase on top of solids, a glass thief or a COmposite LIquid WAste SAmpler (COLIWASA) could be used to sample only the liquid to determine if the phase of interest exhibits the characteristic of ignitability as described in 40 CFR, Part 261.21.

5.8.3 Considerations for Waste Sampling Designs

Waste sampling designs should consider the variability of the sample population in terms of the characteristic of concern, the physical size and state of items present in the population, and the ability to access all portions of the population for purposes of sampling. Elements of the sampling design should include the determination of the sample locations and the number of samples to be collected, decisions on the type of samples (grab or composite) to collect, and selection of the appropriate sampling equipment. While sample locations are usually restricted to accessible portions of a waste unit's population, the number of samples to be collected is

ED_001670_00012770-00143

usually determined by the objective of the study. Factors to consider when determining the appropriate number of samples are; preliminary information on the waste, the size of the sample population, field screening results, the variability of the waste, laboratory resources available, and the budget for the investigation. Composite samples are used to obtain average concentrations of waste units while grab samples are utilized to delineate hot spots or to acquire data for sample variability, or to determine compliance with Land Disposal Restrictions (LDR) treatment standards. A small wastestream that has a hazardous constituent or characteristic randomly distributed in a relatively homogeneous matrix requires fewer samples than a large wastestream that has a constituent or characteristic of concern which is non-randomly distributed in a heterogeneous matrix. For a waste with constituent of concern that is randomly distributed, an authoritative or systematic grid sampling design would be appropriate depending on the objectives. On the other-hand, a stratified sampling or very specialized design should be employed for wastes that are non-randomly distributed. Reviewing the available preliminary information should improve the effectiveness of any sampling investigation. If waste variability cannot be estimated after review of available information, then a preliminary sampling and analytical effort may be necessary. A preliminary sampling investigation would be important when the study's objective is to fully characterize a waste stream using a probabilistic or "statistical" design.

Probabilistic sampling designs similar to the ones used to characterize a site with soil contamination can be used to characterize large units such as waste piles or surface impoundments with random pollutant distributions. Note that an authoritative design is often appropriate to demonstrate the maximum degree of contamination in certain waste management units. Examples include the collection of a sludge sample for inorganic analyses at the inlet to a surface impoundment, or a sample for volatile organic compound analysis collected from the most recently generated material placed in a waste pile. A comprehensive probabilistic design may be required to fully characterize unusually complex wastestreams that have a high degree of heterogeneity. For some highly complex, heterogeneous wastes where an average concentration would not be reflected by a design of reasonable scope, an authoritative sampling design based on the sampler's experience may be the only feasible approach. For a heterogeneous waste population, it may be necessary to segregate and sample components suspected of containing constituents of concern. Background samples are not required when collecting highly concentrated waste samples.

5.8.4 Waste Sampling Equipment

An extremely important factor in the sampling strategy will be determined by the physical characteristics of the waste material. Selecting appropriate sampling equipment can be one of the most challenging tasks while planning a sampling investigation. By selecting sampling equipment that will not discriminate against certain physical characteristics (e.g., phase, particle size, etc.), sampling bias can be minimized during waste sampling. Because wastes often stratify due to different densities of phases, settling of solids, or varying waste constituents generated at different times, it also may be important to obtain a vertical cross section of the entire unit.

Other desired features of sampling equipment that should be considered; the ability to access the desired sampling locations, the ability to maintain sample integrity, the reactivity of equipment with the waste, and the ability to properly decontaminate the sampling apparatus. In addition, analytical requirements such as the sample handling and preparation to correctly analyze physical samples need to be considered. For solidified wastes, samples will often be required to undergo particle size reduction (PSR) prior to chemical analyses.

ED_001670_00012770-00144

Sampling equipment should be selected to accommodate all of the known physical characteristics of concern or chosen such that the effect of any sampling bias is understood. Often because of a lack of preliminary information, varying field conditions, or waste heterogeneity, a piece of equipment selected during the investigations's planning phase may be unsuccessful for collecting a particular waste sample, and another piece of equipment will be required as a substitute. Any sampling bias or deficiencies resulting from the use of substituted equipment should be documented and explained with the data.

5.8.5 Field Screening

Field screening can be very effective in waste characterization and extremely valuable in selecting appropriate sampling locations and chemical analyses when little preliminary data exists. Field investigators routinely use observations, container labels/markings, physical characteristics, air monitoring equipment, pH meters/paper, and field flash point analyzers to confirm preliminary data or to decide on sampling locations during waste investigations. Figure 5-1 (RCRA Waste Characterization) is a flow diagram that depicts the process that field investigators may use to decide which waste containers to sample and what analyses to perform on particular samples when attempting to make RCRA Characteristic Waste determinations.

ED_001670_00012770-00145

FIGURE 5-1
RCRA WASTE CHARACTERIZATION FLOW CHART

HAZARDOUS WASTE CHARACTERIZATION

DEFINITIONS

Solid Waste: Solid, liquid, or contained gaseous material that is discarded by being disposed of, burned or incinerated, or recycled.

Hazardous Waste: Solid waste that has hazardous waste characteristics or is a listed hazardous waste, and is not otherwise excluded from regulation.

APPLICABLE STANDARDS

Federal: Resource Conservation and Recovery Act (RCRA) regulations 40 CFR 261 and 262.11.

State: Most states have adopted RCRA waste characterization regulations similar to the Federal rules. However, characterization of non-hazardous solid waste varies from state to state. Some states define certain additional waste as special wastes.

CHARACTERIZATION PROCESS

RCRA solid waste is defined in detail in 40 CFR 261.2. Certain recycled and reused materials are exempt from regulation as solid waste. The RCRA regulations at 40 CFR 262.11 require all parks that generate solid waste to determine whether or not the waste is a hazardous waste (HW). Figure 2 -
Definition of a Hazardous Waste (40 CFR 260 Appendix 1) is a convenient flow chart of the procedure. The methodology is outlined as follows:

1. Determine if the waste is excluded from hazardous waste regulation by reviewing 40 CFR 261.4.
2. Determine if the waste is a "listed" hazardous waste by reviewing the lists found in 40 CFR 261, Subpart D. Listed hazardous wastes include the following:

- Wastes from non-specific sources (F-coded HW).
- Wastes from specific sources (K-coded HW).
- Discarded commercial chemical products, off-specification materials, container residues, or spill residues (U- and P-coded HW).
- Mixtures of solid waste and listed hazardous waste are classified as listed HW, regardless of the relative quantities

3. Determine if the waste is a "characteristic" hazardous waste by reviewing 40 CFR 261, Subpart C .Hazardous waste characteristics and codes include:

- Ignitability - flashpoint < 140 ˚ F (D001).
- Corrosivity - pH < 2 or > 12 (D002).
- Reactivity - unstable under normal conditions (D003).
- Toxicity Characteristic (TC) - leaches toxic chemicals in excess of regulatory levels (D004 through D043). This is evaluated by performing the toxicity Characteristic Leaching Procedure (TCLP) test.

Determination of whether a waste is hazardous by characteristics can be made by:

- Testing the waste in accordance with the methods outlined in Subpart C, or
- Applying knowledge of the waste characteristics (e.g., material safety data sheet [MSDS] information for the products that generated the waste).

RECORDKEEPING

All waste characterization documentation, such as laboratory tests and waste analyses, must be kept on file at the park for a minimum of three years (40 CFR 262.40). It is recommended that, for potential liability issues related to RCRA compliance and offsite disposal, that these records be maintained indefinitely.

UNKNOWN WASTES

A commonly encountered problem is the characterization of "unknown" waste materials. The first step in characterizing is to determine, if possible, the activity that generated the waste. In addition, any information on the characteristics of the raw materials used in the activity should be gathered. If these steps do not result in a clear characterization of the waste, then laboratory analysis of the material should be performed.

A sampling and analysis protocol must be developed, based upon what is known about the material. The cost of this task can be minimized by performing less expensive screening tests prior to conducting more comprehensive and costly analyses. Waste disposal companies with experience in characterization can often assist in this process. However, whenever a waste disposal firm is used, it should be remembered that the generator always has the ultimate responsibility for proper characterization.

TYPICAL SOLID WASTE CHARACTERIZATION

The following list includes examples of typical characterizations of materials that are defined as solid waste:

- Used oil - If managed under federal or most state used oil management rules it is not a hazardous waste, unless it is mixed with certain types of listed hazardous waste or meets the definition of a characteristic HW [40 CFR 261.6(a)(4)].
- Batteries - Generally non-hazardous waste if managed through a recycling program.
- Solvent - Waste solvent is typically a HW for ignitability (D001) and/or is listed based upon its composition (F001 through F005).
- Solvent-based paint - Similar to solvent dependent upon the chemical composition.
- Lead paint - Dry, lead-based paint chips can be high in total lead content. A TCLP analysis should be performed to evaluate TC potential.
- Antifreeze - Typically managed as a nonhazardous waste; often managed with a park's waste oil stream.
- Asbestos - Typically managed as a special waste. Other rules outlining special handling requirements apply.
- Tires - A non-hazardous waste; however, in most states banned from land disposal and must be recycled.
- Fuel - Waste fuel is typically a hazardous waste due to ignitability.

HAZARDOUS WASTE CHARACTERIZATION CHECKLIST	
Checklist Item	**Notes**
1. Confirm that evaluations have been made to determine if wastes generated at the park are RCRA solid waste as defined by 40 CFR 262.2. (Note: Certain recycled or reused materials are exempt from RCRA regulation.)	
2. If a waste has been defined as RCRA solid waste, verify that evaluations have been made to determine whether the waste is exempt from RCRA hazardous waste regulation by 40 CFR 262.4.	
4. If a waste is not a listed hazardous waste, confirm that a determination has been made as to whether the waste is a characteristically hazardous waste under 40 CFR 262, Subpart C. This is done by knowledge of the process and material characteristics or by performing specific tests as outlined in the regulations.	
5. Ensure that waste characterization documents are complied and maintained in facility hazardous waste management files.	

ED_001670_00012770-00147

5.9 Wastewater Sampling Designs

Introduction

Wastewater sampling studies focus primarily on collecting wastewater samples of the influent and/or effluent at domestic and non-domestic facilities. Sampling activities are usually conducted for National Pollutant Discharge Elimination System (NPDES) compliance, Clean Water Act compliance (for pretreatment and biosolids), compliance assistance, civil and criminal investigations, and water quality studies. The collection of wastewater samples is necessary in order to obtain reliable data that can support compliance or enforcement activities. Specific sampling criteria for the collection of wastewater samples is given in Section 9 of this SOP.

The main considerations in developing a wastewater sampling strategy are:

- Type of study (Compliance Sampling Inspection(CSI), Diagnostic Evaluation (DE), etc.).
- Temporal variability of the wastestream.
- Regulated or target pollutants in the wastewater stream to be sampled.
- Laboratory method detection level and reporting level.
- Selection of the projected sampling locations to satisfy the study objectives.
- Quality control criteria of the parameters to be sampled (oil and grease samples need to be collected as grab samples, trip blanks are taken into the field for the collection of samples for volatile organic compound analyses, etc.).

The complexity of the sampling program will vary with a number of factors. Some primary factors are:

- The number of sampling stations to be monitored. This will be dependent on NPDES permit requirements and the type of study (typically Toxic CSIs and DEs require a greater amount of sampling stations than a routine CSI).
- Process and operation criteria of the source generator (e.g., batch operation vs. continuous discharge).
- Accessibility to sampling stations.
- Special handling requirements of the target pollutants (sampling equipment for trace organic compounds require special cleaning procedures, etc.).
- Laboratory analyzing samples (may require shipping samples from the field, etc.).
- Coordination of participating organizations in the study (e.g., State assistance with the sample collection).
- The length of time for sampling activities will dictate logistical considerations (e.g., shipment of samples, additional supplies, etc.).

ED_001670_00012770-00148

5.10 Quality System Policy and Planning

5.10.1 Introduction

In order to ensure that environmental programs and decisions are supported by data of the type and quality needed and expected for their intended use, EPA has established an Agency-wide Quality System. EPA Order 5360.1 CHG 2, *Policy and Program Requirements for the Mandatory Agency- Wide Quality System,* provides requirements for conducting quality management practices, including quality assurance (QA) and quality control (QC) activities for environmental data collection and environmental technology programs performed by or for EPA.

5.10.2 Routine Inspections

For routine sampling activities, such as inspections, adherence to the procedures and techniques contained in this SOP will generally satisfy QA/QC requirements. However, in the process of planning an inspection, the team leader will need to pay particular attention to the following:

- In preparing equipment lists, ensure that materials and cleaning procedures are consistent with the requirements for the particular parameters being analyzed.
- Plan for the collection of blanks, and other quality control samples recommended in Section 5.11 of this SOP.
- Discuss analytical reporting limits with the laboratory to ensure that they are compatible with permit limitations, action levels, and/or standards.
- Make logistical arrangements to ensure that samples arrive at the laboratory in time to ensure that holding times are not exceeded.

5.10.3 Quality Assurance Project Plans (QAPP)

For non-routine sampling activities, the project leader will need to prepare a Quality Assurance Project Plan (QAPP). The QAPP must be finalized and approved by the Quality Assurance Project Officer before any environmental samples are collected, and before any environmental measurements are made.

The elements of a QAPP are as follows:

1. **Cover Page** - The cover page should include the name of the project, the name of the preparer, and all approval signatures.
2. **Table of Contents** - A table of contents is recommended if the document is more than ten pages in length.
3. **Distribution List** - This includes the name of each individual who will receive a copy of the QAPP, after approval. This simplifies the distribution of later revisions, if required.

4 **Project Description/Background** - State the problem to be addressed or the decision to be made. Include background information indicating the need for the study. Indicated the intended use of the data by describing the decisions to be made along with action levels or standards, if any, that will be used. This section will ultimately represent the justification for all that follows later in the QAPP. Identify the expected users of the environmental data, and indicate how project success will be determined.

5 **Project Technical Design** - Describe and justify the sampling strategy. State what parameters will be measured, and how often. Identify which measurements are essential to the project, and which are secondary. Indicate the number of anticipated sampling points and how they will be selected. Include a map showing the site(s) and each sampling point. Discuss how locational information will be obtained, such as use of a Global Positioning System. Identify potential sources of spatial and temporal variability and how the monitoring design will account for them. State what quality control (QC) activities will occur during the project (e.g. field blanks, duplicates, QC samples, etc.).

6 **Project Organization and Task Responsibilities** - Include a list of all key individuals in charge of every major activity, and their respective responsibilities.

7 **Special Training Requirements** - Identify any special training and certification requirements needed by project personnel for field or laboratory activities. Indicate how this information will be documented and assured.

8 **Project Schedule** - Delineate the project schedule from initiation to final report submission, including all intermediate major events and actions.

9 **Field Sampling Table** - This section is intended to ensure that the sampler will collect sufficient sample volumes in a manner that meets the laboratory's needs. It also assists the laboratory in planning for the analysis of samples from the project. This information is most easily presented in tabular form and should include the following headings, at a minimum: sample matrix, analyte(s), number of samples, sample volume (headings for both QC volumes and standard volumes), sample container, sample preservation, and holding time. The number of samples should include blanks, duplicates, etc. The table should also indicate any special handling requirements that might be necessary.

10 **Field Sampling Requirements** - All sampling methods must be fully described. Where methods are already described in SOPs, reference can be made to the specific SOP (or section of a large SOP) which details the methodology to be used. Describe any deviations from these standard protocols. List all sampling equipment needed. Describe techniques or guidelines to be followed in selecting sampling points and equipment. Identify the nature of the samples, such as grab or composite. If samples will be homogenized, indicate the procedure which will be used. Describe cleaning procedures for field equipment and precautions which will be taken to prevent cross contamination. Discuss procedures for collecting field measurements (i.e. temperature, flow, pH, etc.).

11 **Sample Handling and Custody Requirements** - Describe the logistics of sample handling and the chain-of-custody procedures which will be followed in the field, the laboratory, and during transportation. Include copies of any forms which will

ED_001670_00012770-00150

be used, including labels and custody forms. Identify sources of sample containers and any special cleaning procedures for the containers. State requirements for sample archiving and disposal.

12 **Analytical Method Requirements** - The analytical methods to be used must be referenced for each analyte. Indicate any selected options and any deviations from the written methodology. Discuss procedures for and/or results of validation of the modified method. Identify all required QC checks, such as reagent blanks, lab duplicates, and matrix spikes, their required frequency, and actions to be taken if control limits are exceeded.

Discuss calibration procedures and checks for field instruments.

The methods and instruments to be used must be capable of measuring each analyte at the desired detection level, and the methods must be approved for the intended sample matrices. Different methods have different levels of accuracy and certain methodologies may be required by program regulations. Provide a table which includes the following: analyte, sample matrix, analytical method reference, method detection limit, estimated accuracy, estimated precision, and required action level or standard. The analytical laboratory can assist in providing much of this information.

13 **Secondary Data (Non-direct Measurement Projects)** - For projects in which environmental data will be obtained from computer data bases or literature searches, define the types of data needed, as well as the acceptance criteria for this information. Fully discuss limitations on the use of the data. Determine how data will be qualified and how deficiencies will be resolved.

14 **Other Data Quality Indicators** - It is essential to describe the Data Quality Objectives of the project, expressing what the results of the project will be used for and the data quality necessary to support that use. Data Quality Objectives should be developed jointly by the sampling team leader and the project managers. The process should combine the manager's need for confidence in decision-making with the practical difficulties and expense of collecting "better data." The QAPP must specify quantitative and qualitative data quality indicators such as precision, accuracy, representativeness, completeness, comparability, and sensitivity (method detection limits). The quantitative aspects of precision, accuracy, and sensitivity have been covered in previous sections. In this section, the qualitative data indicators (representativeness, comparability, and completeness) are discussed.

Representativeness: Representativeness is the extent to which measurements represent the true system. State the goals for representativeness and how they will be achieved. Describe how the collected data will accurately represent the population or environmental parameter being measured. Discuss how the sampling design will account for spatial, temporal, and other parameter variability.

Comparability: Comparability is defined as the extent to which data from one study can be compared directly to similar studies. State the goals for achieving data comparability and how they will be attained. Describe what confidence is required in comparing results with those of other studies.

Completeness: Completeness is the fraction of the planned data that must be collected in order to fulfill the statistical criteria for the intended use of the data. State the level of completeness required, and the consequences if this level is not attained. Indicate whether sufficient resources have been allocated to ensure completion of the project.

15 **Peer Review** - Indicate whether the project will be subject to a formal peer review process.

16 **Instrument, Equipment, and Supplies Testing and Maintenance Requirements** - For all field, laboratory, and data management equipment and supplies, describe the inspection and acceptance criteria for use. Indicate the requirements for calibration checks and maintenance, and the frequency for each.

17 **Assessments/Oversight** - Assessments include reviews and audits, designed to ensure that the QAPP is being followed throughout the project. Assessments will identify any shortcomings or deviations, and lead to the initiation of corrective actions.

List the inspections, audits, or reviews of management, field, laboratory, and data activities that will occur throughout the project. Identify who will perform these reviews, and the frequency of the proposed assessments. Discuss how the results of the assessments will be reported. Identify the procedures for responding to the assessments, implementing corrective actions, and documenting the results.

18 **Data Review, Validation, and Usability** - State the criteria which will be used to review, accept, reject, or qualify data. Specify what modeling or statistical evaluations will be performed and how they will be validated. Refer to laboratory SOPs, which discuss the steps required to obtain final results from raw data. Describe how errors, if detected, will be corrected. Describe how blanks, duplicates, spikes, etc. will be used in calculations and data review. Discuss how results obtained from the project will be reconciled with the user's data quality objectives. Indicate how any limitation on the data will be reported to data users.

19 **Documentation and Records** - Discuss who will prepare the final project report and any interim reports that may be required. Summarize what will be included in the reports. Indicate where all raw data (i.e. field notes, laboratory data, forms, records) will be recorded and stored. Indicate how this information may be retrieved in the future, and how long the information must be retained.

5.11 Specific Sample Collection Quality Control Procedures

5.11.1 Introduction

This subsection provides guidelines for establishing quality control procedures for sampling activities. Strict adherence to all of the standard operating procedures outlined in this subsection form the basis for an acceptable sampling quality assurance program.

5.11.2 Experience Requirements

There is no substitute for field experience. Therefore, all professional and paraprofessional investigators shall have the Section Chiefs' clearance before they are permitted to lead sampling surveys. Field experience shall be gained by on-the-job training using the "buddy" system. Each new investigator should accompany experienced employees on as many different types of field studies as possible. During this training period, the new employee will receive hands-on experience in all facets of field investigations, including sampling, under the direction and supervision of senior investigators.

5.11.3 Traceability Requirements

All sample collection activities shall be traceable through field records to the person(s) collecting the sample and to the sampling equipment (where appropriate) used to collect that sample. All calibration records for sampling equipment (where appropriate) shall be kept so that they are similarly traceable. See Sections 3.1 through 3.6 for specific procedures to be utilized that insure traceability.

5.11.4 Chain-of-Custody

Specific chain-of-custody procedures are included in Sections 3.1 through 3.6 of this SOP. These procedures will insure that data collected during an investigation will withstand scrutiny during litigation. To assure that procedures are being followed, it is recommended that field investigators or their designees self-audit chain-of-custody entries, field notes, and any other recorded information for accuracy.

5.11.5 Sampling Equipment Construction Material

Sampling equipment construction materials can affect sample analytical results. Materials used must not contaminate the sample being collected and must be used once and disposed, or easily decontaminated, so that samples are not cross contaminated.

5.11.6 Sample Preservation

Samples for some analyses must be preserved in order to maintain their integrity. It must be noted that the required preservative(s) will vary based upon the specific requirements of the regulated program that the sample are collected under. For example, preservatives required for routine analyses of samples collected under the NPDES program are given in 40 CFR Part 136 - Table II. All samples requiring preservation should be preserved immediately (i.e., within 15 minutes) of sample collection in the field. Samples that **should not** be preserved in the field are:

- Those collected within a hazardous waste site that are known or thought to be highly contaminated with toxic materials which may be highly reactive. Barrel, drum, closed container, spillage, or other source samples from hazardous waste sites are not to be preserved with any chemical. These samples may be preserved by placing the sample container on ice, if necessary.

- Those samples that have extremely low or high pH, or samples that may generate potentially dangerous gases if they were preserved using the procedures given in 40 CFR Part 136.

- Those samples for ultra low level metals analyses, which are best preserved in a laboratory clean room in order to minimize the possibility of contamination.

All samples preserved with chemicals shall be clearly identified by indication on the sample label that the sample is preserved. If samples normally requiring preservation were not preserved, field records should clearly specify the reason.

5.11.7 Special Precautions for Trace Pollutant Sampling

Some pollutants can be detected in the parts per billion and/or parts per trillion range. Extreme care must be taken to prevent cross-contamination of these samples. The following precautions shall be taken when trace pollutants are of concern:

- A clean pair of new, non-powdered, disposable latex gloves will be worn each time a different location is sampled and the gloves should be donned immediately prior to sampling. The gloves should not come into contact with the media being sampled.

- Sample containers for source samples or samples suspected of containing high concentrations of pollutants shall be placed in separate plastic bags immediately after collecting, labeling, etc.

- If possible, ambient samples and source samples should be collected by different field teams. If different field teams cannot be used, all ambient samples shall be collected first and placed in separate ice chests or shipping containers. Samples of waste, or highly contaminated samples, shall never be placed in the same ice chest as environmental samples. Ice chests or shipping containers for source samples or samples suspected to contain high concentrations of pollutants shall be lined with new, clean, plastic bags.

- If possible, one member of the field sampling team should take all the notes, fill out labels, etc., while the other members collect the samples.

- When sampling surface waters, the water sample should always be collected before the sediment sample is collected. This is to ensure that the water sample is not biased by fine solids introduced into the water column by the sediment collection procedure.

- Sample collection activities should proceed progressively from the least suspected contaminated area to the most suspected contaminated area.

- Investigators should use equipment constructed of Teflon®, stainless steel, or glass that has been properly pre-cleaned (Appendix B) for collection of samples for trace metals or organic compounds analyses. Teflon® or glass is preferred for collecting samples where trace metals are of concern. Equipment constructed of plastic or PVC shall not be used to collect samples for trace organic compounds analyses.

ED_001670_00012770-00154

5.11.8 Sample Handling and Mixing

After collection, all sample handling should be minimized. Investigators should use extreme care to ensure that samples are not contaminated. If samples are placed in an ice chest, investigators should ensure that melted ice cannot cause the sample containers to become submerged, as this may result in sample cross-contamination. Plastic bags, such as whirl pack bags or similar plastic bags sealed with tape, should be used when small sample containers (e.g., VOC vials) are placed in ice chests to prevent breakage and cross-contamination. Sample containers for trace pollutant analyses should be placed in zip lock bags in order to prevent cross-contamination.

Wherever possible, samples should be collected directly into their respective containers for analyses. In the case of samples collected by automatic composite sampler, the sampler collection jug should be capped and shaken to ensure that the sample is well mixed before pouring into individual sample containers. In some cases, the physical configuration of the sampling location may make it impossible to safely collect samples for volatile organic compound analysis directly in the 40 ml vials. In this situation, it is permissible to use pre cleaned amber glass jars with a rod and clamp as the initial sample collection device, and then immediately transfer the samples to the 40 ml vials. Grab samples for parameters which are compatible with plastic containers, may be collected with a plastic bucket and rope. The only exceptions to this technique are bacteria samples which must be collected with sterilized equipment.

It is extremely important that soil and sediment samples, **with the exception of VOC samples,** be mixed thoroughly to ensure that the sample is as representative as possible of the sample media. The common method of mixing is referred to as quartering. The quartering procedure should be performed as follows:

1. The material in the sample pan should be divided into quarters and each quarter should be mixed individually.

2. Two quarters should then be mixed to form halves.

3. The two halves should be mixed to form a homogenous matrix .

This procedure should be repeated several times until the sample is adequately mixed. If round bowls are used for sample mixing, adequate mixing is achieved by stirring the material in a circular fashion, reversing direction, and occasionally turning the material over.

5.11.9 Special Handling of Samples for Volatile Organic Compounds (VOCs) Analysis

Water samples to be analyzed for volatile organic compounds should be stored in new 40-ml septum vials with screw cap and Teflon®-silicone disk in the cap to prevent contamination of the sample by the cap. Preservative should be in the vial prior to collection of the sample. The vials should be completely filled to prevent volatilization, and extreme caution should be exercised when filling a vial to avoid any turbulence which could also produce volatilization. The sample should be carefully poured down the side of the vial to minimize turbulence. As a rule, it is best to gently pour the last few drops into the vial so that surface tension holds the water in a convex meniscus. The cap is then applied and some overflow is lost, but the air space in the bottle is eliminated. After capping, turn the bottle over and tap it to check for bubbles. If any bubbles are present, turn the vial right side up and tap the side so that the bubble rise to the top. Then

ED_001670_00012770-00155

remove the cap, add a few more drops of sample, seal, and recheck. Since the VOC vials are pre-preserved, caution should be exercised when the vials are used as the collection device for surface water samples in order to prevent the loss of the preservative.

Soil and sediment samples for VOC analyses should be collected and handled as specified in section 14.4. Soil and sediment samples collected for VOC analyses should not be mixed.

5.11.10 Estimating Variability

Field Duplicates

For ambient surveys and other non routine sampling, five (5) percent of the samples should be field duplicates. Essentially, twice as much material is collected as normally would be required for a single sample. The material is taken into two sets of sample containers, and each of the two sets is given a unique sample identification. The project leader will record in the field records which pairs of samples are field duplicates. The data from field duplicates can be used to estimate the variability of the matrix being sampled. Some matrices, such as water can be expected to be relatively homogeneous at a specific time and sampling location. More variability is generally observed with soil and sediment matrices. Secondly, field duplicates will also reflect any variability introduced by small inconsistencies in sampling technique. Data from field duplicates should be discussed with the Quality Assurance Officer in order to estimate variability.

Blank Samples

Blanks are essentially analyte free water which is subjected to some of the same conditions as experienced by actual samples. Blanks may be used to demonstrate the thoroughness of cleaning techniques used for sampling equipment. Blanks are also used to determine whether samples have been subjected to additional contamination due to handling between the time of collection and the time of analysis. The following blank samples are commonly required:

- Water Sample VOC Blank - A water sample VOC blank sample is required for every study where water samples are collected for VOC analysis. Sealed and preserved 40-ml VOC vials shall be filled in the field with deionized organic free water. The field blank water can be carried into the field in a pre-cleaned amber glass jar, and it should not be more than one day before the scheduled inspection/investigation. These field blanks will be handled and treated in the same manner as the water samples collected for volatile organic compounds analysis on that particular study. These samples will be clearly identified on sample labels/tags and Chain-Of-Custody/Field Data Forms. In the event that laboratory organic free water is not reasonably available, commercially obtained bottled spring water may be substituted.

- Equipment Field Blanks - When cleaned reusable equipment is required during a sampling investigation, a set of cleaned equipment (i.e. all pieces used for a single sample) will be selected for collection of a rinsate blank. At least one rinsate blank will be collected during each sampling operation. After the piece of equipment has been field cleaned and prior to its being used for sample operations, it will be rinsed with organic/analyte free water. Some of the final

ED_001670_00012770-00156

rinse water will be collected and submitted for analyses of all constituents for which normal samples collected with that piece of equipment are being analyzed.

- Automatic Sampler Blanks - In general, cleaning procedures outlined in Appendix B of this SOP should be adequate to insure sample integrity. However, it is the standard practice of the Section to submit automatic sampler blanks for analyses when automatic samplers are used to collect samples for organic compounds and/or trace level metals analyses. Automatic sampler blanks for other standard analyses may be submitted in the event of special circumstances. The procedure will be to transport the sample collection jug to the field, filled with analyte free deionized water. When the automatic composite sampler is assembled with all tubing in place the intake line for the sampler will be placed in the sample collection jug. The analyte free water will be pumped through the tubing and the automatic composite sampler into appropriate sample containers. These samples will be labeled as equipment blanks. After purging the tubing of analyte free water and emptying the sample collection jug, the automatic composite sampler is set up to begin collecting actual samples.

Data from blank(s) analyses should be reported with all other data. In the event that an analyte is detected in a blank and also in a sample associated with that blank, the sample data may be reported if the concentration in the sample is more than five times the concentration detected in the blank. If the sample concentration is less than five times the concentration detected in the blank, the sample data must be rejected. In this case, consideration should be given to resampling, if practicable. It is regional policy that environmental data are never blank corrected. In other words, it is not proper to subtract blank values from sample values in an attempt to correct for blank contamination.

5.11.11 Sample Volumes for Laboratory Quality Control Procedures

The table of required sample volumes for analysis generally indicates that the first sample (QA/QC sample) for any study should have a larger volume than successive samples from the same study or site. The most recent table of required sample volumes was prepared by the Edison Laboratory Branch on March 2003, and is found in Appendix A. The initial volume is intended to allow the laboratory sufficient volume to run QA/QC procedures such as laboratory duplicates, matrix spikes, etc. The larger QA/QC volumes are required at least once per study, and should be repeated every 20 samples, for very large surveys. In selecting locations to collect QA/QC volumes, avoid locations which are expected to be relatively free of contamination, and those locations expected to be severely contaminated.

5.12 Investigation Derived Waste (IDW)

5.12.1 Types of IDW

Materials which may become IDW are:

- Personnel protective equipment (PPE) - This includes disposable coveralls, gloves, booties, respirator canisters, splash suits, etc.

ED_001670_00012770-00157

- Disposable equipment - This includes plastic ground and equipment covers, aluminum foil, conduit pipe, composite liquid waste samplers (COLIWASAs), Teflon® tubing, broken or unused sample containers, sample container boxes, tape, etc.
- Soil cuttings from drilling or hand auguring.
- Ground water obtained through well development or well purging.
- Cleaning fluids such as spent solvents and washwater.
- Packing and shipping materials.

5.12.2 Management of Non-Hazardous IDW

Disposal of non-hazardous IDW from survey sites should be addressed as part of the survey planning process. If the waste is from an active facility, permission should be sought from the operator of the facility to place the non-hazardous PPE, disposable equipment, and/or paper/cardboard wastes into the facility's dumpsters. Wastes may only be disposed on-site with the permission of the owner. In the absence of permission, wastes should be removed from the site and disposed of properly. Disposal of non-hazardous IDW such as purge water, decontamination wash water, should be specified in the approved study plan. It is recommended that these materials be placed into a unit with an environmental permit such as a wastewater treatment plant. These materials must not be placed into dumpsters. If the facility at which the study is being conducted is active, permission should be sought to place these types of IDW into the facility's treatment system. Monitoring well purge or development water from shallow wells may also be poured onto the ground down gradient of the monitoring well. Purge water from deep monitoring wells should be collected and discharged to a wastewater treatment system. Purge water from private potable wells which are in service may be discharged directly onto the ground surface.

5.12.3 Management of Hazardous IDW

Disposal of hazardous or suspected hazardous IDW must be specified in the approved study plan. Hazardous IDW must be disposed as specified in US-EPA regulations. If appropriate, these wastes may be placed back in an active facility waste treatment system. These wastes may also be disposed of in the source area from which they originated, if doing so does not endanger human health and the environment. If on-site disposal is not feasible, and if the wastes are suspected to be hazardous, appropriate tests must be conducted to make that determination. If they are determined to be hazardous wastes, they must be properly contained and labeled. They may be stored on the site for a maximum of 90 days before they must be manifested and shipped to a permitted treatment or disposal facility. Generation of hazardous IDW must be anticipated, if possible, to permit arrangements for proper containerization, labeling, transportation, and disposal/treatment in accordance with US-EPA regulations.

Spent solvents must be returned to the Edison Laboratory for proper disposal or recycling. All hazardous IDW must be containerized. Proper handling and disposal should be arranged prior to commencement of field activities.

ED_001670_00012770-00158

5.13 References

1. US EPA Region 2 - Guidance for the Development of Quality Assurance Project Plans for Environmental Monitoring Projects, April 12, 2004. Available as a PDF file at: http://www.epa.gov/region02/qa/air_h20_qapp04.pdf

2. EPA Requirements for Quality Assurance Project Plans, EPA QA/R5,, March 2001. Publication number EPA/240/B-01/003. Available as a PDF file at: http://www.epa.gov/quality/qs-docs/r5-final.pdf

3. EPA Guidance for Quality Assurance Project Plans, EPA QA/G-5, EPA/240/R-02-009.

4. Guidance for Systematic PlanningUsing the Data Quality Objectives Process - EPA QA/G-4, February 2006. Publication number EPA/240/B-06/001. Available as a PDF file at: http://www.epa.gov/quality/qs-docs/g4-final.pdf

5. Data Quality Objectives Process for Hazardous Waste Site Investigations- EPA QA/G-4HW, January 2000. Publication number EPA/600/R-00/007. Available as a PDF file at: http://www.epa.gov/quality/qs-docs/g4hw-final.pdf

ED_001670_00012770-00159

SECTION 6
GROUND WATER SAMPLING

PERFORMANCE OBJECTIVES:

- To collect a sample representative of ground water residing in the formation of interest.
- To reduce the potential bias caused by the sampling equipment used to obtain the sample.

In the late 1990's, EPA Region 2 approved a ground water sampling procedure using low stress purging and sampling techniques. This Low Stress (or Low-Flow) Purging and Sampling Procedure is the EPA Region II standard method for collecting groundwater samples from monitoring wells. This technique is used almost exclusively for Superfund work. Requests for the Monitoring and Assessment Branch to perform ground water sampling (under RCRA) has been a rare occurrence, and this is expected to continue. However, there may be some instances that MAB will be requested to sample ground water monitoring wells. In these instances, the low flow techniques specified in the Ground Water Sampling Procedure Using Low Stress Purging and Sampling Techniques (attached) will be followed. However, there will be some cases where low flow equipment and/or pumps cannot be used. In these cases the following procedures will be followed.

6.1 Introduction

Ground water sampling may be required for a variety of reasons, such as examining potable or industrial water supplies, checking for and/or tracking pollutant plume movement in the vicinity of a land disposal or spill site, Resource Conservation Recovery Act (RCRA) compliance monitoring, or examining a site where historical information is minimal or non-existent but where it is thought that ground water contamination may have occurred. Ground water samples are usually obtained from either temporarily, or permanently, installed ground water monitoring wells. They can also be obtained anywhere ground water is present, such as in a pit, or a dug hole, or drilled hole.

Occasionally, the ground water source may not be in the ideal location to meet a particular objective (e.g., to track a pollutant plume). In that case, either a temporary, or permanent, monitoring well should be installed. An experienced and knowledgeable person will need to locate the well and supervise its installation so that samples will be representative of the ground water. Additional guidance is given in RCRA Ground-Water Monitoring: Technical Guidance and Chapter 11 of SW-846. The ground water sampling procedures described in this SOP will meet or exceed the requirements of these documents.

Ground water sampling procedures can be sub-divided into two areas, purging and sampling, each of which has different goals and objectives. Within the topic of purging, it is necessary, because of the inherently different characteristics of the two types of wells, to address permanent and temporary wells separately. The procedures and techniques which follow in this section reflect these differences.

ED_001670_00012770-00160

6.2 Purging

6.2.1 Purging and Purge Adequacy

Purging is the process of removing stagnant water from a monitoring well, immediately prior to sampling, causing its replacement by ground water from the adjacent formation, which is representative of actual aquifer conditions. In order to determine when a well has been adequately purged, field investigators should: 1) monitor the pH, specific conductance, temperature, and turbidity of the ground water removed during purging; and 2) observe and record the volume of water removed.

Prior to initiating the purge, the amount of water standing in the water column (water inside the well riser and screen) should be determined. To do this, the diameter of the well should be determined and the water level and total depth of the well are measured and recorded. Specific methodology for obtaining these measurements is found in Section 16.3 of this SOP. Once this information is obtained, the volume of water to be purged can be determined using one of several methods. One is the equation:

$$V = 0.041 \times (d \times d)\, h$$

Where: h = depth of water in feet
d = diameter of well in inches
V = volume of water in gallons

Alternatively, the volume may be determined using a casing volume per foot factor for the appropriate diameter well, similar to that in Table 6.1. The water level is subtracted from the total depth, providing the length of the water column. This length is multiplied by the factor in the Table 6.1 which corresponds to the appropriate well diameter, providing the amount of water, in gallons, contained in the well. Other acceptable methods include the use of nomographs, or other equations or formulae.

With respect to volume, an adequate purge is normally achieved when three to five times the volume of standing water in the well has been removed. The field notes should reflect the single well volume calculations, or determinations, according to one of the above methods, and a reference to the appropriate multiplication of that volume, i.e., a minimum three well volumes, clearly identified as a purge volume goal.

With respect to the ground water chemistry, an adequate purge is achieved when the pH, specific conductance, and temperature of the ground water have stabilized and the turbidity has either stabilized, or is below 10 Nephelometric Turbidity Units (NTUs) (twice the Primary Drinking Water Standard of 5 NTUs). Although 10 NTUs is normally considered the minimum goal for most ground water sampling objectives, one (1) NTU has been shown to be easily achievable and reasonable attempts should be made to reach this level. Stabilization occurs when pH measurements remain constant within 0.1 Standard Unit (SU), specific conductance varies no more that 10 percent, and the temperature is constant for at least three consecutive readings. There are no criteria establishing how many sets of measurements are adequate for the determination of stability. If the calculated purge volume is small, the measurements should be taken frequently to provide a sufficient number of measurements to evaluate stability. If the purge volume is large, measurements taken every 15 minutes may be sufficient

ED_001670_00012770-00161

If, after three well volumes have been removed, the chemical parameters have not stabilized according to the above criteria, additional well volumes (up to five well volumes), should be removed. If the parameters have not stabilized within five volumes, it is at the discretion of the project leader whether or not to collect a sample or to continue purging. If after five well volumes, pH and conductivity have been stabilized and the turbidity is still decreasing and approaching an acceptable level, additional purging should be considered to obtain the best sample possible. The conditions of sampling should be noted in the field log.

TABLE 6.1 WELL CASING DIAMETER vs. VOLUME	
WELL CASING DIAMETER(INCHES) vs. VOLUME (GALS.)/FEET of WATER	
CASING SIZE (in INCHES)	GALLONS/FT of WATER
1	0.041
2	0.163
3	0.367
4	0.653
5	1.020
6	1.469
7	1.999
8	2.611
9	3.305
10	4.080
11	4.934
12	5.875

In some situations, even with slow purge rates, a well may be pumped or bailed dry (evacuated). In these situations, this generally constitutes an adequate purge, and the well can be sampled following sufficient recovery (enough volume to allow filling of all sample containers). It is not necessary that the well be evacuated three times before it is sampled. The pH, specific conductance, temperature, and turbidity should be measured, during collection of the sample from the recovered volume, as the measurements of record for the sampling event.

Attempts should be made to avoid purging wells to dryness. This can be accomplished, for example, by slowing the purge rate. If a well is pumped dry, it may result in the sample being comprised partially of water contained in the sand pack, which may be reflective, at least in part,

ED_001670_00012770-00162

of initial stagnant conditions. In addition, as water re-enters a well that is in an evacuated condition, it may cascade down the sand pack or the well screen, stripping volatile organic constituents that may be present and/or introducing soil fines into the water column. It is particularly important that wells be sampled as soon as possible after purging. If adequate volume is available, the well must be sampled immediately. If not, sampling should occur as soon as adequate volume has recovered.

Equipment Available

Monitoring well purging is accomplished by using in-place plumbing and dedicated pumps or, by using portable pumps/equipment when dedicated systems are not present. The equipment may consist of a variety of pumps, including peristaltic, large and small diameter turbine (electric submersible), bladder, centrifugal, gear-driven positive displacement, or other appropriate pumps. The use of any of these pumps is usually a function of the depth of the well being sampled and the amount of water that is to be removed during purging. Whenever the head difference between the sampling location and the water level is less than the limit of suction and the volume to be removed is reasonably small, a peristaltic pump should be used for purging. Appendix E of this SOP contains the operating instructions for all pumps commonly used during Section conducted ground water investigations.

Bailers may also be used for purging in appropriate situations, however, their use is discouraged. Bailers tend to disturb any sediment that may be present in the well, creating or increasing sample turbidity. If a bailer is used, it should be a bottom loading Teflon® bailer.

6.2.2 Purging Techniques (Wells Without Plumbing or In-Place Pumps)

For permanently installed wells, the depth of water and depth of the well should be determined (if possible) before purging. Electrical water level indicators/well sounders can be used for this purpose. It is standard practice to mark the top of casing, providing a point of reference from which these measurements will be consistently made. Field investigators should look for these markings when taking these measurements. Extreme caution should be exercised during this procedure to prevent cross-contamination of the wells. This is a critical concern when samples for trace organic compounds or metals analyses are collected. At a minimum, the well sounding device should be cleaned by washing in a laboratory detergent solution, followed by rinses with tap water and analyte-free water. After cleaning, it should be placed in a clean plastic bag or wrapped in foil.

Purging with Pumps

When peristaltic pumps or centrifugal pumps are used, only the intake line is placed into the water column. The line placed into the water should be either standard-cleaned (see Appendix B) Teflon® tubing, for peristaltic pumps, or standard-cleaned stainless steel pipe attached to a hose for centrifugal pumps.

When submersible pumps (bladder, turbine, displacement, etc.) are used, the pump itself is lowered into the water column. The pump must be cleaned as specified in Appendix B.

ED_001670_00012770-00163

Purging with Bailers

Standard-cleaned (Appendix B) bottom loading Teflon® bailers with Teflon® leaders and new nylon rope are lowered into top of the water column, allowed to fill, and removed. It is critical that bailers be slowly and gently immersed into the top of the water column, particularly during final stages of purging, to minimize turbidity and disturbance of volatile organic constituents. The use of bailers for purging and sampling is discouraged because the correct technique is highly operator dependent.

Field Care of Purging Equipment

Regardless of which method is used for purging, new plastic sheeting should be placed on the ground surface around the well casing to prevent contamination of the pumps, hoses, ropes, etc., in the event they need to be placed on the ground during the purging or they accidentally come into contact with the ground surface. It is preferable that hoses used in purging that come into contact with the ground water be kept on a spool or contained in a plastic-lined tub, both during transporting and during field use, to further minimize contamination from the transporting vehicle or ground surface.

Purging Entire Water Column

The pump/hose assembly, or bailer, used in purging should be lowered into the top of the standing water column and not deep into the column. This is done so that the purging will "pull" water from the formation into the screened area of the well and up through the casing so that the entire static volume can be removed. If the pump is placed deep into the water column, the water above the pump may not be removed, and the subsequent samples, particularly if collected with a bailer, may not be representative of the ground water.

It is recommended that no more than three to five feet of hose be lowered into the water column. If the recovery rate of the well is faster than the pump rate and no observable draw down occurs, the pump should be raised until the intake is within one foot of the top of the water column for the duration of purging. If the pump rate exceeds the recovery rate of the well, the hose or pump will have to be lowered, as needed, to accommodate the draw down. After the hose or pump is removed from the well, all wetted portions of the hose and the pump should be cleaned as outlined in Appendix B of this SOP.

Careful consideration shall be given to using pumps to purge wells which are excessively contaminated with oily compounds, because it may be difficult to adequately decontaminate severely contaminated pumps under field conditions. When wells of this type are encountered, alternative purging methods, such as bailers, should be considered.

General Low Flow/Low Stress Method Preference

The device with the lowest pump, or water removal rate, and the least tendency to stress the well during purging should be selected for use. For example, if a bailer and a peristaltic pump both work in a given situation, the pump should be selected because it will greatly minimize turbidity, providing a higher quality sample (Section 6.2.4 contains a description of low flow purging and sampling with a peristaltic pump used in a temporary well). If a Fultz® pump, or a Grundfos Redi-Flo2®, could both be used, the Redi-Flo2® may be given preference because the speed can

ED_001670_00012770-00164

be controlled to provide a lower pump rate, thereby minimizing turbidity.

Low Flow/Low Volume Purging Techniques/Procedures

Alternatives to the low flow purging procedures exist and may be acceptable. The low flow/low volume purging is a procedure used to minimize purge water volumes. The pump intake is placed within the screened interval at the zone of sampling, preferably, the zone with the highest flow rate. Low flow rate purging is conducted after hydraulic conditions within the well have re-stabilized, usually within 24 to 48 hours. Flow rates should not exceed the recharge rate of the aquifer. This is monitored by measuring the top of the water column with a water level recorder or similar device while pumping. These techniques, however, are only acceptable under certain hydraulic conditions and are not considered standard procedures.

6.2.3 Purging Techniques - Wells with In-Place Plumbing

Wells with in-place plumbing are commonly found at municipal water treatment plants, industrial water supplies, private residences, etc. Many permanent monitoring wells at active facilities are also equipped with dedicated, in-place pumps. The objective of purging wells with in-place pumps is the same as with monitoring wells without in-place pumps, i.e., to ultimately collect a sample representative of the ground water. Among the types of wells identified in this section, two different approaches are necessary. The permanent monitoring wells with in-place pumps should, in all respects, be treated like the monitoring well without pumps. They generally are sampled only occasionally and require purging as described for wells without in-place pumps, i.e., 3 to 5 well volumes and stable parameters.

In the case of the other types of wells, however, not enough is generally known about the construction aspects of the wells to apply the same criteria as used for monitoring wells, i.e., removing 3 to 5 well volumes. The volume to be purged in these situations, therefore, depends on several factors: whether the pumps are running continuously or intermittently, and whether or not any storage/pressure tanks are located between the sampling point and the pump. The following considerations and procedures should be followed when purging wells with in-place plumbing under the conditions described.

Continuously Running Pumps

If the pump runs more or less continuously, no purge (other than opening a valve and allowing it to flush for a few minutes) is necessary. If a storage tank is present, a spigot, valve or other sampling point should be located between the pump and the storage tank. If not, locate the valve closest to the tank. Measurements of pH, specific conductance, temperature, and turbidity are recorded at the time of sampling.

Intermittently Running Pumps

If the pump runs intermittently, it is necessary to determine, if possible, the volume to be purged, including storage/pressure tanks that are located prior to the sampling location. The pump should then be run continuously until the required volume has been purged. If construction characteristics are not known, best judgement should be used in establishing how long to run the pump prior to collecting the sample. Generally, under these conditions, 30 minutes will be

ED_001670_00012770-00165

adequate. Measurements of pH, specific conductance, temperature and turbidity should be made and recorded at intervals during the purge and the final measurements made at the time of sampling.

6.2.4 Purging Techniques - Temporary Monitoring Wells

Temporary ground water monitoring wells differ from permanent wells because temporary wells are installed in the ground water for immediate sample acquisition. Wells of this type may include standard well screen and riser placed in boreholes created by hand augering, power augering, or by drilling. They may also consist of a rigid rod and screen that is pushed, driven, or hammered into place to the desired sampling interval, such as the Direct Push Wellpoint®, the Geoprobe® and the Hydropunch®. As such, the efforts to remove several volumes of water to replace stagnant water do not necessarily apply in these situations, because generally, stagnant water is non-existent. It is important to note, however, that the longer a temporary well is in place and not sampled, the more appropriate it may be to apply, to the extent possible, standard permanent monitoring well purging criteria to it.

In cases where the temporary well is to be sampled immediately after installation, purging is conducted primarily to mitigate the impacts of installation. In most cases, temporary well installation procedures disturb the existing aquifer conditions, resulting primarily in increased turbidity. Therefore, the goal of purging is to reduce the turbidity and remove the volume of water in the area directly impacted by the installation procedure. Low turbidity samples in these types of wells are typically and routinely achieved by the use of low-flow purging and sampling techniques.

The following low-flow purging technique using peristaltic pumps has been used routinely to achieve acceptably low NTU values in a variety of temporary monitoring well applications.

In purging situations where the elevation of the top of the water column is no greater than approximately 25 feet below the pump head elevation, a peristaltic pump may be used to purge temporary wells. Enough tubing is deployed to reach the bottom of the temporary well screen. At the onset of purging, the tubing is slowly lowered to the bottom of the screen and is used to remove any formation material which may have entered the well screen during installation. This is critical to ensuring rapid achievement of low turbidity conditions. After the formation material is removed from the bottom of the screen, the tubing is slowly raised through the water column to near the top of the column. The tubing can be held at this level to determine if the pump is lowering the water level in the well. If not, secure the tubing at the surface to maintain this pumping level.

If the water column is lowered, and the pump is not variable speed, continue to lower the tubing as the water column is lowered. If a variable speed peristaltic pump is being used and draw down is observed on initiation of pumping, reduce the pump speed and attempt to match the draw down of the well. Sustained pumping at these slow rates will usually result in a relatively clear, low turbidity sample. If the draw down stabilizes, maintain that level, however, if it continues to lower, "chase" the water column until the well is evacuated. In this case, the recovered water column may be relatively free of turbidity and can be sampled. It may take several episodes of recovery to provide enough volume for a complete sample.

With many of the direct push sampling techniques, purging is not practical, or possible, therefore, no purging is conducted. The sampling device is simply pushed to the desired depth and opened and the sample is collected and retrieved.

6.2.5 Investigation Derived Waste

Purging generates quantities of purge water or investigation derived waste (IDW), the disposition of which must be considered. What is appropriate for the disposition of the water is, in part, dependent on the nature of the investigation. If the IDW is generated at a RCRA facility, it will generally be contained and disposed on site in an on-site treatment facility. IDW generated during Superfund or other investigations may, at the discretion of the field project leader or the program manager (remedial project manager), be discharged to the ground, away from the well, or be containerized for later disposal, or other appropriate action.

6.3 Sampling

Sampling is the process of obtaining, containerizing, and preserving the ground water sample after the purging process is complete. Non-dedicated pumps for sample collection generally should not be used. Many pumps are made of materials, such as brass, plastic, rubber, or other elastomer products which may cause chemical interferences with the sample. Their principle of operation may also render them unacceptable as a sample collection device. The pump may be turbine driven, which may release volatile organic constituents. It is recognized that there are situations, such as industrial or municipal supply wells or private residential wells, where a well may be equipped with a dedicated pump from which a sample would not normally be collected. Discretion should always be used in obtaining a sample.

6.3.1 Equipment Available

Because of the problems with most pumps described in the preceding paragraph, only three devices should be used to collect ground water samples from most wells. These are the peristaltic pump, a stainless steel and Teflon® bladder pump, and a bottom loading Teflon® bailer.

Other monitoring equipment used during sampling includes water level indicators, pH meters, thermometers, conductivity meters, and nephelometers (turbidity meters).

6.3.2 Sampling Techniques - Wells With In-Place Plumbing

Samples should be collected following purging from a valve or cold water tap as near to the well as possible, preferably prior to any storage/pressure tanks that might be present. Remove any hose that may be present before sample collection and reduce the flow to a low level to minimize sample disturbance, particularly with respect to volatile organic constituents. Samples should be collected directly into the appropriate containers (see Appendix A). It may be necessary to use a secondary container, such as a certified pre-cleaned 8 oz. sample jar, or a stainless steel scoop, to obtain and transfer samples from spigots with low ground clearance. Also, refer to the Potable Water Supply discussion in Section 2.2. All measurements for pH, specific conductance, temperature, and turbidity should be recorded at the time of measurement.

6.3.3 Sampling Techniques - Wells without Plumbing

Following purging, samples should be collected using a peristaltic pump, a Teflon®/stainless steel bladder pump, or a bottom loading Teflon® bailer. These techniques are described below.

ED_001670_00012770-00167

Peristaltic pump

The peristaltic pump can be used for sample collection provided that a minimum length of pump tubing is used, and equipment blank samples are taken to verify if any contamination is caused by the sampling equipment. Use Teflon® tubing (¼-inch O.D.) to connect the pump tubing to the sample source, and an additional section of Teflon® tubing on the discharge side of the pump tubing. The pump creates a vacuum, and draws the sample into the sample container(s).

Samples for volatile organic compound analysis should be collected using a bailer, or by filling the Teflon® tube, by one of two methods, and allowing it to drain into the sample vials. The tubing can be momentarily attached to the pump to fill the tube with water. After the initial water is discharged through the pump head, the tubing is quickly removed from the pump and a gloved thumb placed on the tubing to stop the water from draining out. The tubing is then removed from the well and the water allowed to either gravity drain or be reversed, by the pump, into the sample vials. (Note: When reversing the pump, make sure the discharge tubing is not submerged in purge water. This will prevent introducing potentially cross contaminated purge water into the sample.) Alternatively, the tubing can be lowered into the well the desired depth and a gloved thumb placed over the end of the tubing. This method will capture the water contained in the tubing. It can then be removed from the well and the water collected by draining the contents of the tubing into the sample vials. Under no circumstances should the sample for volatile organic compound analysis be collected from the content of any other previously filled container. All equipment should be cleaned using the procedures described in Appendix B. Also, refer to the Potable Water Supply discussion, Section 2.2, for additional information. When sampling for metals only, it is also permissible to collect the sample directly from the pump discharge tubing after an adequate purge has been demonstrated. When collecting samples in this manner there are several considerations to be aware of. The pump head tubing (silastic, etc,) must be changed after each well and a rinsate blank must be collected of a representative piece of the pump head tubing (only one blank per investigation). Also, precautions must be taken to ensure that the end of the discharge tubing is not allowed to touch the ground or other surface to ensure the integrity of the sample collected in this manner.

Bladder Pumps

After purging has been accomplished with a bladder pump, the sample is obtained directly from the pump discharge. If the discharge rate of the pump, during purging, is too great, so as to make sample collection difficult, care should be taken to reduce the discharge rate at the onset of actual sample collection. This is necessary to minimize sample disturbance, particularly with respect to samples collected for the analysis of volatile organic compounds.

Bailers

When bailing, new plastic sheeting should be placed on the ground around each well to provide a clean working area. New nylon rope should be attached to the bailer via a Teflon® coated stainless steel wire. This coated wire is semi-permanently attached to the bailer and is decontaminated for reuse as the bailer is cleaned. The bailer should be gently immersed in the top of the water column until just filled. At this point, the bailer should be carefully removed and the contents emptied into the appropriate sample containers.

ED_001670_00012770-00168

6.3.4 Sample Preservation

Immediately after collection, all samples requiring preservation must be preserved with the appropriate preservative. Consult Appendix A for the correct preservative for the particular analytes of interest. All samples preserved using a pH adjustment (except VOCs) must be checked, using pH strips, to ensure that they were adequately preserved. This is done by pouring a small volume of sample over the strip. Do not place the strip in the sample.

6.3.5 Special Sample Collection Procedures

Trace Organic Compounds and Metals

Special sample handling procedures should be instituted when trace pollutant samples are being collected. All sampling equipment, including pumps, bailers, water level measurement equipment, etc., which comes into contact with the water in the well must be cleaned in accordance with the cleaning procedures described in Appendix B. Pumps should not be used for sampling, unless the interior and exterior portions of the pump and the discharge hoses are thoroughly cleaned. Blank samples should be collected to determine the adequacy of cleaning prior to collection of any sample using a pump.

Order of Sampling with Respect to Analytes

In many situations when sampling permanent or temporary monitoring wells, an adequate purge, with respect to turbidity, is often difficult to achieve. Removal and insertion of equipment after the purge and prior to actual sampling may negate the low turbidities achieved during purging and elevate turbidity back to unacceptable levels. For this reason, it is important that special efforts be used to minimize any disturbance of the water column after purging and to collect the aliquot for metals first.

Filtering

As a standard practice, ground water samples will not be filtered for routine analysis. Filtering will usually only be performed to determine the fraction of major ions and trace metals passing the filter and used for flow system analysis and for the purpose of geochemical speciation modeling. Filtration is not allowed to correct for improperly designed or constructed monitoring wells, inappropriate sampling methods, or poor sampling technique.

When samples are collected for routine analyses and are filtered, such as under conditions of excessive turbidity, both filtered and non-filtered samples will be submitted for analyses. Samples for organic compounds analysis should not be filtered. Prior to filtration of the ground water sample for any reason other than geochemical speciation modeling, the following criteria must be demonstrated to justify the use of filtered samples for inorganic analysis:

1. The monitoring wells, whether temporary or permanent, have been properly constructed and developed.

2. The ground water samples were collected using sampling techniques in accordance with this section, and the samples were analyzed in accordance with EPA approved methods.

3. Efforts have been undertaken to minimize any persistent sample turbidity problems. These efforts may consist of the following:

   - Redevelopment or re-installation of permanent ground water monitoring wells.

   - Implementation of low flow/low stress purging and sampling techniques.

4. Turbidity measurements should be taken during purging and sampling to demonstrate stabilization, or the lack thereof. Measurements should be documented in the field notes.

If the ground water sample appears to have either a chemically-induced elevated turbidity, such as would occur with precipitate formation, or a naturally elevated colloid or fine, particulate related turbidity, filtration will not be allowed.

If filtration is necessary for purposes of geochemical modeling or other pre-approved cases, the following procedures are suggested:

1. Accomplish in-line filtration through the use of disposable, high capacity filter cartridges (barrel-type) or membrane filters in an in-line filter apparatus. The high capacity, barrel-type filter is preferred due to the higher surface area associated with this configuration. If a membrane filter is utilized, a minimum diameter of 142 mm is suggested.

2. Use a 5 µm pore-size filter for the purpose of determining the colloidal constituent concentrations. A 0.1 µm pore-size filter should be used to remove most non-dissolved particles.

3. Rinse the cartridge or barrel-type filter with 500 milliliters of the solute (ground water to be sampled) prior to collection of sample. If a membrane filter is used, rinse with 100 milliliters of solute prior to sample collection.

One blank sample should be taken per sampling event, prior to sample collection. Potential differences could result from variations in filtration procedures used to process water samples for the determination of trace element concentrations. A number of factors associated with filtration can substantially alter "dissolved" trace element concentrations; these include filter pore size, filter type, filter diameter, filtration method, volume of sample processed, suspended sediment concentration, suspended sediment grain-size distribution, concentration of colloids and colloidally associated trace elements, and concentration of organic matter. Therefore, consistency is critical in the comparison of short-term and long-term results. Further guidance on filtration may be obtained from the following: Metals in Ground Water: Sampling Artifacts and Reproducibility; Filtration of Ground Water Samples for Metals Analysis; and Ground Water Sampling - A Workshop Summary.

Bacterial Sampling

Whenever wells (normally potable wells) are sampled for bacteriological parameters, care must be taken to ensure the sterility of all sampling equipment and all other equipment entering the well. Further information regarding bacteriological sampling is available in the following: Sampling for Organic Chemicals and Microorganisms in the Subsurface; Handbook for Evaluating Water Bacteriological Laboratories; and Microbiological Methods for Monitoring the Environment, Water and Wastes.

ED_001670_00012770-00170

6.3.6 Specific Sampling Equipment Quality Assurance Techniques

All equipment used to collect ground water samples shall be cleaned as outlined in Appendix B and repaired, if necessary, before being stored at the conclusion of field studies. Cleaning procedures utilized in the field (Appendix B), or field repairs shall be thoroughly documented in field records.

6.3.7 Auxiliary Data Collection

During ground water sample collection, it is important to record a variety of ground water related data. Included in the category of auxiliary data are water level measurements, well volume determinations, and pumping rates during purging. This information should be documented in the field records. Well volume determinations are described in Section 6.2.1.

6.4 Ground Water Level Measurements

6.4.1 Introduction

The measurement of the ground water level in a well is frequently conducted in conjunction with ground water sampling to determine the "free" water surface. This ground water level measurement can be used to establish ground water flow direction and gradients. Total well depth and ground water level measurements may be needed to determine the volume of water in the well casing prior to purging the well for sampling purposes.

All ground water level and total depth measurements should be made relative to an established reference point on the well casing and should be documented in the field records. To be useful for establishing ground water gradient, the reference point should be tied in with the NGVD (National Geodetic Vertical Datum) or a local datum. For an isolated group of wells, an arbitrary datum common to all wells in that group may be used, if necessary.

6.4.2 Specific Ground Water Level Measuring Techniques

Measuring the depth to the free ground water surface can be accomplished by the following methods:

1. Electronic Water Level Indicators - This instrument consists of a spool of dual conductor wire, a probe attached to the end, and an indicator. When the probe comes in contact with the water, the circuit is closed and a meter light and/or buzzer attached to the spool will signal the contact. Penlight or 9-volt batteries are normally used as a power source. Measurements should be made and recorded to the nearest 0.01 foot.

2. Interface Probe - This instrument is used if a light non-aqueous phase liquid (LNAPL) such as oil is floating on the surface of the ground water. When the probe comes in contact with the LNAPL, a continuous beeping sound is emitted. As the probe is lowered through the layer of LNAPL, it eventually comes in contact with the ground water surface and an intermittent beeping sound is emitted. By subtracting the depth to the LNAPL from the depth of the ground

ED_001670_00012770-00171

water, the thickness of the LNAPL layer is calculated.

3. Weighted Tape - In this method a suitable weight, is used to suspend the tape. The weight should, ideally, be made of a relatively inert material and should be easily cleaned. Measurements should be made and recorded to the nearest 0.1 foot.

4. Chalked Tape - Chalk rubbed on a weighted steel tape will discolor or be removed when in contact with water. Distance to the water surface can be obtained by subtracting the wet chalked length from the total measured length. The tape should be withdrawn quickly from the well because water has a tendency to rise up the chalk due to capillary action. Measurements should be made and recorded to the nearest 0.01 foot. This method is not recommended if samples are to be collected for analyses of organic or inorganic pollutants.

5. Other Methods - There are other types of water level indicators and recorders available on the market such as the sliding float method, air line pressure method, and electrical and automatic recording methods. These methods are primarily used for closed systems or permanent monitoring wells. Acoustic water level indicators are also available which measure water levels based on the measured return of an emitted acoustical impulse. Accuracies for these methods vary and should be evaluated before selection. Any method not capable of providing measurements to within 0.1 foot should not be used.

6.4.3 Total Well Depth Measurement Techniques

The weighted tape, or electronic water level indicators can be used to determine the total well depth. This is accomplished by lowering the tape or cable until the weighted end is felt resting on the bottom of the well. Because of tape buoyancy and weight effects encountered in deep wells with long water columns, it may be difficult to determine when the tape end is touching the bottom of the well. Care must be taken in these situations to ensure accurate measurements. All total well depth measurements must be made and recorded to the nearest 0.1 foot.

6.4.4 Equipment Available

The following equipment is available for ground water level and total well depth measurements:

1. weighted steel measuring tapes

2. electronic water level indicators.

6.4.5 Specific Quality Control Procedures

Before each use, these devices should be prepared according to the manufacturer's instructions (if appropriate) and checked for obvious damage. These devices should be decontaminated according to the procedures specified in Appendix B prior to use at the next well. All maintenance data should be recorded in a logbook.

ED_001670_00012770-00172

6.4.6 Well Pumping Rate - Bucket/Stop Watch Method

The pumping rate for a pump can be determined by collecting the discharge from the pump in a bucket of known volume and timing how long it takes to fill the bucket. The pumping rate should be in gallons per minute. This method shall be used primarily with pumps with a constant pump rate, such as gasoline-powered or electric submersible pumps. Care should be taken when using this method with some battery-powered pumps. As the batteries' charge decreases, the pump rate also decreases so that pumping rate calculations using initial pump rates may be erroneously high. If this method is used with battery powered pumps, the rate should be re-checked frequently to ensure accuracy of the pumping rate calculations.

ED_001670_00012770-00173

6.4 References

1. US EPA., RCRA Ground-Water Monitoring: Draft Technical Guidance, November 1992, Office of Solid Waste, EPA/530-R-93-001. This document is available as a PDF file at: http://www.epa.gov/correctiveaction/resource/guidance/sitechar/gwmonitr/rcra_gw.pdf

2. US EPA., Test Methods for Evaluating Solid Waste, Volume II: Field Manual, Physical/Chemical Methods, November 1986, Office of Solid Waste and Emergency Response, SW-846.

3. Puls, Robert W., Don A. Clark, and Bert Bledsoe. Metals in Ground Water: Sampling Artifacts and Reproducibility. *Hazardous Waste and Hazardous Materials* 9(2): 149-162 (1992). This document is available on the internet as a PDF file at: http://www.epa.gov/tio/tsp/download/lwflw2a.pdf

4. Puls, Robert W., and Michael J. Barcelona. Filtration of Ground Water Samples for Metals Analysis. *Hazardous Waste and Hazardous Materials* 6(4): 385-393 (March1989). This document is available on the internet as a PDF file at: http://www.epa.gov/tio/tsp/download/gwsamp2.pdf

5. Ground Water Sampling - A Workshop Summary. Proceedings from the Dallas, Texas November 30 - December 2, 1993 Workshop. US EPA Office of Research and Development Robert S. Kerr Environmental Research Laboratory. EPA/600/R-94/205, January 1995. This document is available on the internet as a PDF file at: http://www.epa.gov/OUST/cat/gwwkshop.pdf

6. Sampling for Organic Chemicals and Microorganisms in the Subsurface, US EPA, EPA-600/2-77/176 (1977).

7. Handbook for Evaluating Water Bacteriological Laboratories, US EPA, ORD, Municipal Environmental Research Laboratory, Cincinnati, Ohio, 1975.

8. Microbiological Methods for Monitoring the Environment, Water and Wastes, US EPA, ORD, Environmental Monitoring and Support Laboratory, Cincinnati, Ohio, 1978.

ED_001670_00012770-00174

Attachment

U.S. ENVIRONMENTAL PROTECTION AGENCY
REGION II

GROUNDWATER SAMPLING PROCEDURE
LOW STRESS PURGING AND SAMPLING

I. SCOPE & APPLICATION

This Low Stress (or Low-Flow) Purging and Sampling Procedure is the EPA Region II standard method for collecting groundwater samples from monitoring wells. Low Stress Purging and Sampling results in collection of ground water samples from monitoring wells that are representative of groundwater conditions in the geological formation. This is accomplished by minimizing stress on the geological formation and minimizing disturbance of sediment that has collected in the well. The procedure applies to monitoring wells that have an inner casing with a diameter of 2.0 inches or greater. The procedure is appropriate for collection of groundwater samples that will be analyzed for volatile and semi-volatile organic compounds (VOCs and SVOCs), pesticides, polychlorinated biphenyls (PCBs), metals, and microbiological and other contaminants in association with all EPA programs.

This procedure does not address the collection of non-aqueous phase liquid (NAPL) samples and should be used for aqueous samples only. For sampling NAPLs, the reader is referred to the following EPA publications: DNAPL Site Evaluation (Cohen & Mercer, 1993) and the RCRA Ground-Water Monitoring: Draft Technical Guidance (EPA/530-R-93-001), and references therein.

II. METHOD SUMMARY

The purpose of the Low Stress Purging and Sampling procedure is to collect ground water samples from monitoring wells that are representative of groundwater conditions in the geological formation. This is accomplished by setting the intake velocity of the sampling pump to a flow rate that limits drawdown inside the well casing.

Sampling at the prescribed (low) flow rate has three primary benefits. First, it minimizes disturbance of sediment in the bottom of the well, thereby producing a sample with low turbidity (i.e., low concentration of suspended particles). Typically, this saves time and analytical costs by eliminating the need for collecting and analyzing an additional filtered sample from the same well. Second, this

procedure minimizes aeration of the groundwater during sample collection, which improves the sample quality for VOC analysis. Third, in most cases the procedure significantly reduces the volume of groundwater purged from a well and the costs associated with its proper treatment and disposal.

III. ADDRESSING POTENTIAL PROBLEMS

Problems that may be encountered using this technique include a) difficulty in sampling wells with insufficient yield; b) failure of one or more key indicator parameters to stabilize; c) cascading of water and/or formation of air bubbles in the tubing; and d) cross-contamination between wells.

Insufficient Yield

Wells with insufficient yield (i.e., low recharge rate of the well) may dewater during purging. Care should be taken to avoid loss of pressure in the tubing line due to dewatering of the well below the level of the pump's intake. Purging should be interrupted before the water level in the well drops below the top of the pump, as this may induce cascading of the sand pack. Pumping the well dry should therefore be avoided to the extent possible in all cases. Sampling should commence as soon as the volume in the well has recovered sufficiently to allow collection of samples. Alternatively, ground water samples may be obtained with techniques designed for the unsaturated zone, such as lysimeters.

Failure to Stabilize Key Indicator Parameters

If one or more key indicator parameters fails to stabilize after 4 hours, one of three options should be considered: a) continue purging in an attempt to achieve stabilization; b) discontinue purging, do not collect samples, and document attempts to reach stabilization in the log book; or c) discontinue purging, collect samples, and document attempts to reach stabilization in the log book. The key indicator parameter for samples to be analyzed for VOCs is dissolved oxygen. The key indicator parameter for all other samples is turbidity.

Cascading

To prevent cascading and/or air bubble formation in the tubing, care should be taken to ensure that the flow rate is sufficient to maintain pump suction. Minimize the length and diameter of tubing (i.e., 1/4 or 3/8 inch ID) to ensure that the tubing remains filled with ground water during sampling.

Cross-Contamination

To prevent cross-contamination between wells, it is strongly

ED_001670_00012770-00176

recommended that dedicated, in-place pumps be used. As an alternative, the potential for cross-contamination can be reduced by performing the more thorough "daily" decontamination procedures between sampling of each well in addition to the start of each sampling day (see Section VII, below).

IV. EQUIPMENT

- Approved site-specific Field Sampling Plan/Quality Assurance Project Plan (QAPP). This plan must specify the type of pump and other equipment to be used. The QAPP must also specify the depth to which the pump intake should be lowered in each well. Generally, the target depth will correspond to the mid-point of the most permeable zone in the screened interval. Borehole geologic and geophysical logs can be used to help select the most permeable zone. However, in some cases, other criteria may be used to select the target depth for the pump intake. In all cases, the target depth must be approved by the EPA hydrogeologist.
- Well construction data, location map, field data from last sampling event.
- Polyethylene sheeting.
- Flame Ionization Detector (FID) and Photo Ionization Detector (PID).
- Adjustable rate, positive displacement groundwater sampling pump (e.g., centrifugal or bladder pumps constructed of stainless steel or Teflon). A peristaltic pump may only be used for inorganic sample collection.
- Interface probe or equivalent device for determining the presence or absence of NAPL.
- Teflon or Teflon-lined polyethylene tubing to collect samples for organic analysis. Teflon or Teflon-lined polyethylene, PVC, Tygon or polyethylene tubing to collect samples for inorganic analysis. Sufficient tubing of the appropriate material must be available so that each well has dedicated tubing.
- Water level measuring device, minimum 0.01 foot accuracy, (electronic preferred for tracking water level drawdown during all pumping operations).
- Flow measurement supplies (e.g., graduated cylinder and stop watch or in-line flow meter).
- Power source (generator, nitrogen tank, etc.).
- Monitoring instruments for indicator parameters. Eh and dissolved oxygen must be monitored in-line using an instrument with a continuous readout display. Specific conductance, pH, and temperature may be monitored either in-line or using separate probes. A nephalometer is used to measure turbidity.
- Decontamination supplies (see Section VII, below).

ED_001670_00012770-00177

- Logbook (see Section VIII, below).
- Sample bottles.
- Sample preservation supplies (as required by the analytical methods).
- Sample tags or labels, chain of custody.

V. SAMPLING PROCEDURES

Pre-Sampling Activities

1. Start at the well known or believed to have the least contaminated ground water and proceed systematically to the well with the most contaminated ground water. Check the well, the lock, and the locking cap for damage or evidence of tampering. Record observations.

2. Lay out sheet of polyethylene for placement of monitoring and sampling equipment.

3. Measure VOCs at the rim of the unopened well with a PID or FID instrument and record the reading in the field log book.

4. Remove well cap.

5. Measure VOCs at the rim of the opened well with a PID or FID instrument and record the reading in the field log book.

6. If the well casing does not have a reference point (usually a V-cut or indelible mark in the well casing), make one. Note that the reference point should be surveyed for correction of ground water elevations to the mean geodesic datum (MSL).

7. Measure and record the depth to water (to 0.01 ft) in all wells to be sampled prior to purging. Care should be taken to minimize disturbance in the water column and dislodging of any particulate matter attached to the sides or settled at the bottom of the well.

8. If desired, measure and record the depth of any DNAPLs or LNAPLs using an interface probe. Care should be taken to minimize disturbance of any sediment that has accumulated at the bottom of the well. Record the observations in the log book. If LNAPLs and/or DNAPLs are detected, install the pump at this time, as described in step 9, below. Allow the well to sit for several days between the measurement or sampling of any DNAPLs and the low-stress purging and sampling of the groundwater.

Sampling Procedures

ED_001670_00012770-00178

9. Install Pump: Slowly lower the pump, safety cable, tubing and electrical lines into the well to the depth specified for that well in the EPA-approved QAPP or a depth otherwise approved by the EPA hydrdogeologist or project scientist. The pump intake must be kept at least two (2) feet above the bottom of the well to prevent disturbance and resuspension of any sediment or NAPL present in the bottom of the well. Record the depth to which the pump is lowered.

10. Measure Water Level: Before starting the pump, measure the water level again with the pump in the well. Leave the water level measuring device in the well.

11. Purge Well: Start pumping the well at 200 to 500 milliliters per minute (ml/min). The water level should be monitored approximately every five minutes. Ideally, a steady flow rate should be maintained that results in a stabilized water level (drawdown of 0.3 ft or less). Pumping rates should, if needed, be reduced to the minimum capabilities of the pump to ensure stabilization of the water level. As noted above, care should be taken to maintain pump suction and to avoid entrainment of air in the tubing. Record each adjustment made to the pumping rate and the water level measured immediately after each adjustment.

12. Monitor Indicator Parameters: During purging of the well, monitor and record the field indicator parameters (turbidity, temperature, specific conductance, pH, Eh, and DO) approximately every five minutes. The well is considered stabilized and ready for sample collection when the indicator parameters have stabilized for three consecutive readings as follows (Puls and Barcelona, 1996):

    ±0.1 for pH
    ±3% for specific conductance (conductivity)
    ±10 mv for redox potential
    ±10% for DO and turbidity

    Dissolved oxygen and turbidity usually require the longest time to achieve stabilization. The pump must not be removed from the well between purging and sampling.

13. Collect Samples: Collect samples at a flow rate between 50 and 250 ml/min and such that drawdown of the water level within the well does not exceed the maximum allowable drawdown of 0.3 ft. VOC samples must be collected first and directly into sample containers. All sample containers should be filled with minimal

ED_001670_00012770-00179

turbulence by allowing the groundwater to flow from the tubing gently down the inside of the container.

Some groundwater samples require pH adjustment. The appropriate EPA Program Guidance (e.g., Region II CERCLA QA Manual) should be consulted to determine whether pH adjustment is necessary. If pH adjustment is necessary for sample preservation, the amount of acid to be added to each sample vial prior to sampling should be determined, drop by drop, on a separate and equal volume of water (e.g., 40 ml). Ground water purged from the well prior to sampling can be used for this purpose.

14. Remove Pump and Tubing: After collection of the samples, the tubing, unless permanently installed, must be properly discarded or dedicated to the well for resampling by hanging the tubing inside the well.

15. Measure and record well depth.

16. Close and lock the well.

VI. FIELD QUALITY CONTROL SAMPLES

Quality control samples must be collected to determine if sample collection and handling procedures have adversely affected the quality of the ground water samples. The appropriate EPA Program Guidance should be consulted in preparing the field QC sample requirements of the site-specific QAPP.

All field quality control samples must be prepared exactly as regular investigation samples with regard to sample volume, containers, and preservation. The following quality control samples should be collected during the sampling event:

- Field duplicates
- Trip blanks for VOCs only
- Equipment blank (not necessary if equipment is dedicated to the well)

As noted above, groundwater samples should be collected systematically from wells with the lowest level of contamination through to wells with highest level of contamination. The equipment blank should be collected after sampling from the most contaminated well.

VII. DECONTAMINATION

Non-disposable sampling equipment, including the pump and

ED_001670_00012770-00180

support cable and electrical wires which contact the sample, must be decontaminated thoroughly each day before use ("daily decon") and after each well is sampled ("between-well decon"). Dedicated, in-place pumps and tubing must be thoroughly decontaminated using "daily decon" procedures (see #17, below) prior to their initial use. For centrifugal pumps, it is strongly recommended that non-disposable sampling equipment, including the pump and support cable and electrical wires in contact with the sample, be decontaminated thoroughly each day before use ("daily decon").

EPA's field experience indicates that the life of centrifugal pumps may be extended by removing entrained grit. This also permits inspection and replacement of the cooling water in centrifugal pumps. All non-dedicated sampling equipment (pumps, tubing, etc.) must be decontaminated after each well is sampled ("between-well decon," see #18 below).

17. Daily Decon

A) Pre-rinse: Operate pump in a deep basin containing 8 to 10 gallons of potable water for 5 minutes and flush other equipment with potable water for 5 minutes.

B) Wash: Operate pump in a deep basin containing 8 to 10 gallons of a non-phosphate detergent solution, such as Alconox, for 5 minutes and flush other equipment with fresh detergent solution for 5 minutes. Use the detergent sparingly.

C) Rinse: Operate pump in a deep basin of potable water for 5 minutes and flush other equipment with potable water for 5 minutes.

D) Disassemble pump.

E) Wash pump parts: Place the disassembled parts of the pump into a deep basin containing 8 to 10 gallons of non-phosphate detergent solution. Scrub all pump parts with a test tube brush.

F) Rinse pump parts with potable water.

G) Rinse the following pump parts with distilled/ deionized water: inlet screen, the shaft, the suction interconnector, the motor lead assembly, and the stator housing.

H) Place impeller assembly in a large glass beaker and rinse with 1% nitric acid (HNO_3).

I) Rinse impeller assembly with potable water.

J) Place impeller assembly in a large glass bleaker and rinse with isopropanol.

K) Rinse impeller assembly with distilled/deionized water.

18. Between-Well Decon

A) Pre-rinse: Operate pump in a deep basin containing 8 to 10 gallons of potable water for 5 minutes and flush other equipment with potable water for 5 minutes.

B) Wash: Operate pump in a deep basin containing 8 to 10 gallons of a non-phosphate detergent solution, such as Alconox, for 5 minutes and flush other equipment with fresh detergent solution for 5 minutes. Use the detergent sparingly.

C) Rinse: Operate pump in a deep basin of potable water for 5 minutes and flush other equipment with potable water for 5 minutes.

D) Final Rinse: Operate pump in a deep basin of distilled/deionized water to pump out 1 to 2 gallons of this final rinse water.

VIII. FIELD LOG BOOK

A field log book must be kept each time ground water monitoring activities are conducted in the field. The field log book should document the following:

- Well identification number and physical condition.
- Well depth, and measurement technique.
- Static water level depth, date, time, and measurement technique.
- Presence and thickness of immiscible liquid layers and detection method.
- Collection method for immiscible liquid layers.
- Pumping rate, drawdown, indicator parameters values, and clock time, at three to five minute intervals; calculate or measure total volume pumped.
- Well sampling sequence and time of sample collection.
- Types of sample bottles used and sample identification numbers.
- Preservatives used.
- Parameters requested for analysis.
- Field observations of sampling event.
- Name of sample collector(s).
- Weather conditions.

ED_001670_00012770-00182

- QA/QC data for field instruments.

IX. REFERENCES

Cohen, R.M. and J.W. Mercer, 1993, DNAPL Site Evaluation, C.K. Smoley Press, Boca Raton, Florida.

Puls, R.W. and M.J. Barcelona, 1996, Low-Flow (Minimal Drawdown) Ground-water Sampling Procedures, EPA/540/S-95/504.

U.S. EPA, 1993, RCRA Ground-Water Monitoring: Draft Technical Guidance, EPA/530-R-93-001.

ED_001670_00012770-00183

SECTION 7
SAMPLING OF POTABLE WATER SUPPLIES

PERFORMANCE OBJECTIVES:

- To collect a sample representative of the drinking water supply.
- To reduce the bias of system related variables (pumps, piping, holding tanks, etc.).

7.1 Introduction

The same sampling techniques used for wastewater, ground water, surface water, etc., (including thorough documentation of location, date, time, etc.) are to be used during potable water supply sampling. There are certain additional procedures which apply.

7.2 Sampling Site Selection

The following should be considered when choosing the location to collect a potable water sample:

- Taps selected for sample collection should be supplied with water from a service pipe connected directly to a water main in the segment of interest.
- Whenever possible, choose the tap closest to the water source, and prior to the water lines entering the residence, office, building, etc., and also prior to any holding or pressurization tanks.
- The sampling tap must be protected from exterior contamination associated with being too close to a sink bottom, or to the ground. Contaminated water or soil from the faucet exterior may enter the bottle during the collection procedure, since it is difficult to place a bottle under a low tap without grazing the neck interior against the outside faucet surface. If the tap is too close to the ground for direct collection into the appropriate container, it is acceptable to use a smaller (clean) container to transfer sample to a larger container. The smaller container should be made of certified pre-cleaned plastic, glass or stainless steel.
- Leaking taps that allow water to discharge from around the valve stem handle and down the outside of the faucet, or taps in which water tends to run up on the outside of the lip, are to be avoided as sampling locations.
- Disconnect any hoses, filters, or aerators attached to the tap before sampling. These devices can harbor a bacterial population if they are not routinely cleaned or replaced when worn or cracked.
- Taps where the water flow is not constant should be avoided because temporary fluctuation in line pressure may cause clumps of microbial growth that are lodged in a pipe section or faucet connection to break loose. A smooth flowing water stream at moderate pressure without splashing should be used. The sample

ED_001670_00012770-00184

should be collected without changing the water flow. It may be appropriate to reduce the flow for the volatile organic compounds aliquot to minimize sample agitation.

Occasionally, samples are collected to determine the contribution of system related variables (e.g., transmission pipes, water coolers, water heaters, holding tanks, pressurization tanks, etc.) to the quality of potable water supplies. In these cases, it may be necessary to insure that the water source has not been used for a specific time interval (e.g., over a weekend, or a three or four day, holiday period). Sample collection may consist of collecting a sample of the initial flush, collecting a sample after several minutes, and collecting another sample after the system being investigated has been completely purged. When sampling for bacterial content, the sample container should not be rinsed before use due to possible contamination of the sample container or removal of the sodium thiosulfate dechlorinating agent (if used). When filling any sample container, care should be taken that splashing drops of water from the ground or sink do not enter into either the bottle or cap. When sampling at a water treatment plant, samples are often collected from the raw water supply and the treated water after chlorination. Obtain the name(s) of the resident or water supply owner/operator, the resident's exact mailing address, and the resident's work and home telephone numbers. The information is required so that the residents or water supply owner/operators can be informed of the results of the sampling program.

Sampling Technique

The following procedures should be followed when collecting samples from potable water supplies:

1. Ideally, the sample should be collected from a tap or spigot located at or near the well head or pump house and before the water supply is introduced into any storage tanks or treatment units. If the sample must be collected at a point in the water line beyond a pressurization or holding tank, a sufficient volume of water should be purged to provide a complete exchange of fresh water into the tank and at the location where the sample is collected. If the sample is collected from a tap or spigot located just before a storage tank, spigots located inside the building or structure should be turned on to prevent any backflow from the storage tank to the sample tap or spigot. It is generally advisable to open several taps during the purge to ensure a rapid and complete exchange of water in the tanks.

2. Purge the system for at least 15 minutes, when possible. After purging for several minutes, measure the turbidity, pH, specific conductivity, and temperature of the water. Continue to monitor these parameters until three consistent readings are obtained. If possible, obtain three consistent readings after the 15 minute purge.

3. After three consistent readings have been obtained, samples may be collected.

ED_001670_00012770-00185

7.3 References

1. Sampling for Organic Chemicals and Microorganisms in the Subsurface, United States Environmental Protection Agency, EPA-600/2-77-176, 1977.

ED_001670_00012770-00186

SECTION 14
SOIL SAMPLING

PERFORMANCE OBJECTIVES:

To collect a soil sample that is representative of conditions as they exist at the site:

- By selecting the appropriate sampling device(s);
- By taking measures to avoid introducing contamination as a result of poor sampling and/or handling technique;
- By reducing the potential of cross contamination between samples.

14.1 Introduction

Prior to conducting a soil sampling investigation, a sampling strategy should be developed based on the objectives of the investigation (Section 5.5 of this SOP contains a discussion of soil sampling strategies). After developing a soil sampling strategy, the appropriate equipment and techniques must be used to conduct the investigation. This section discusses the various soil sample collection methods, sample handling, and available sampling equipment which has been shown to be technically appropriate.

14.2 Equipment

Selection of equipment is usually based on the depth of the samples to be collected, but it is also controlled to a certain extent by the characteristics of the soil. Manual techniques and equipment such as hand augers are usually used for collecting surface or shallow, subsurface soil samples. Power operated equipment is usually associated with deep sampling, but can also be used for shallow sampling when the bore hole begins to collapse, or when the soil is so tight that manual sampling is not practical.

14.2.1 Precautions for Trace Pollutant Soil Sampling

All soil sampling equipment used for sampling trace pollutants should be constructed of inert materials, such as stainless steel, where possible. Pans used for mixing should be made of Pyrex® (or equivalent) glass. In no case will chromium, cadmium, galvanized, or plated equipment be used for soil sampling when trace levels of inorganic pollutants are of concern. Similarly, no painted or plastic equipment may be used where trace levels of organic pollutants are of concern. Paint, scaly or heavy rust and grease must be removed before use, most often by sandblasting the equipment. Ancillary equipment such as auger flights may be constructed of other materials since this equipment does not come in direct contact with the samples. The procedures outlined in Section 5.11.7 should be followed.

14.3 Sampling Methodology

This discussion of soil sampling methods reflects both the equipment used to collect the sample

ED_001670_00012770-00187

as well as how the sample is handled and processed after retrieval. Selection of equipment is usually based on the depth of sampling, but it is also controlled, to a certain extent, by the characteristics of the material. Simple, manual techniques and equipment, such as hand augers, are usually selected for surface, or shallow, subsurface soil sampling. As the depth of the sampling interval increases, some type of powered sampling equipment is usually needed to overcome the friction induced by soil resistance and depth. The following is an overview of the various sample collection methods employed over three general depth classifications: surface, shallow subsurface, and deep subsurface. Any of the deep collection methods described may be used to collect samples from the shallower intervals.

14.3.1 Manual Collection Techniques and Equipment

These methods are used primarily to collect surface and shallow subsurface soil samples. Surface soils are generally classified as soils between the ground surface and 6 to 12 inches below ground surface. The shallow subsurface interval may be considered to extend from approximately 12 inches below ground surface to a site-specific depth at which sample collection using manual methods becomes impractical.

Surface Soils

Surface soils may be collected with a wide variety of equipment, if constructed of appropriate materials. Spoons or hand-augers are typically used to collect surface soil samples. If a thick, matted root zone is encountered at or near the surface, it should be removed before the sample is collected. The collected soil is placed in a pan, thoroughly mixed, (Section 5.11.8), and placed in the appropriate sample container(s). Section 13.4 contains specific procedures for collecting and handling soil samples for volatile organic compounds analysis.

Shallow Subsurface Soils

Hand augers are the most common equipment used to collect shallow subsurface samples. Typically, 4-inch auger-buckets with cutting heads are pushed and twisted into the ground, then removed as the buckets are filled. The auger holes are advanced one bucket at a time. The practical depth of investigation using a hand-auger depends upon the soil properties. In sand, auguring is usually easily performed, but the depth of collection is limited to the depth at which the sand begins to flow back into the hole. At this depth, the bore hole will usually collapse and cannot be advanced. Deeper sampling must be accomplished using power equipment. Hand auguring may also be of limited use in tight clays or cemented sands. Regardless of the soil type, at depths approaching 20 feet sidewall friction may become so severe that power equipment must be used.

Power augers such as the Little Beaver® may be used to advance the borehole where hand augers are impractical. Power augers are a sampling aid, not a sampling device, and can be used to advance a borehole to approximately 20 feet, depending upon soil conditions. If power augers are used to advance the borehole, care must be taken that exhaust fumes, gasoline, and\or oil do not contaminate the borehole. The soil sample may then be collected using a hand auger. After the sample has been collected, the borehole may again be advanced (if necessary), and additional samples collected. The auger bucket must be replaced between samples with a properly decontaminated auger bucket. When a new borehole is advanced, the entire hand auger assembly must be replaced with a properly decontaminated hand auger assembly. If the borehole

ED_001670_00012770-00188

is advanced using a hand auger, upon reaching the desired sampling depth replace the bucket with a properly decontaminated bucket. The sample may then be collected. After the sample has been collected, the borehole may be advanced (if necessary) with the bucket that was used to collect the sample. Each sample must be collected using a properly decontaminated bucket.

Before the soil is placed in a pan, it is necessary to remove the top several inches of soil to minimize the possibility of cross-contamination of the sample from fall-in of material from the upper portions of the hole. Once the soil is placed in a pan, it is thoroughly mixed, (Section 5.11.8), and placed in the appropriate sample container(s). Section 13.4 contains specific procedures for collecting and handling soil samples for volatile organic compounds analysis.

14.3.2 Powered Equipment

Powered equipment may be used to acquire soil samples from any depth (surface, shallow subsurface, and deep subsurface). When power equipment is used to advance the borehole and collect the sample, care must be taken that exhaust fumes, gasoline, and\or oil do not contaminate the borehole and the sample. Among the common types of powered equipment used to collect subsurface soil samples are splitspoon samplers driven with a drill rig drive-weight assembly or pushed using drill rig hydraulics; continuous split-spoon samplers; direct-push rigs; and back-hoes. The Region 2 office does not own this type of equipment, however, contractors may be hired to perform work involving this equipment. Therefore, a brief description of this equipment is provided below.

Drill Rigs

Drill rigs offer the capability of collecting soil samples from greater depths. For all practical purposes, the depth of investigation achievable by this method is controlled only by the depth of soil overlying bedrock, which may be in excess of 100 feet.

Split-spoon samplers are usually driven either inside a hollow-stem auger or an open borehole after the auger(s) have been temporarily removed. The spoon is driven with a 140-pound hammer through a distance of up to 24 inches and removed.

Continuous split-spoon samplers may be used to obtain five-foot long, continuous samples approximately 3 to 5 inches in diameter. These devices are placed inside a five-foot section of hollow-stem auger and advanced with the auger during drilling. As the auger advances, the central core of soil moves into the sampler and is retained. Before the soil is placed in a pan, it is necessary to remove the top several inches of soil to minimize the possibility of cross-contamination of the sample from fall-in of material from the upper portions of the hole. Once the soil is placed in a pan, it is thoroughly mixed, (Section 5.11.8), and placed in the appropriate sample container(s). Section 13.4 contains specific procedures for collecting and handling soil samples for volatile organic compounds analysis.

Direct Push Rigs

This method uses a standard split-spoon modified with a locking tip, which keeps the spoon closed during the sampling push. Upon arrival at the desired depth, the tip is remotely released and the push continued. During the push, the released tip moves freely inside of the spoon as the soil core displaces it. This technique is particularly beneficial at highly contaminated sites,

ED_001670_00012770-00189

because no cuttings are produced. The push rods are generally retrieved with very little residue resulting in minimal exposure to sampling personnel and reduced IDW. Before the soil is placed in a pan, it is necessary to remove the top several inches of soil to minimize the possibility of cross-contamination of the sample from fall-in of material from the upper portions of the hole. Once the soil is placed in a pan, it is thoroughly mixed (see Section 5.11.8), and placed in the appropriate sample container(s). Section 13.4 contains specific procedures for collecting and handling soil samples for volatile organic compounds analysis.

Geoprobe® Large Bore Soil Sampler

Geoprobe® offers several tools for soil sample collection. Among these are the Macro-Core® Soil Sampler and the large bore and dual tube soil sampling systems. The Branch does not have this equipment on hand, and therefore would need to hire a contractor to perform this work.

Back-Hoes

Back-hoes may be utilized in the collection of shallow subsurface soil samples. Samples may be collected directly from the bucket, or the trench wall (subject to applicable safety procedures). The bucket must be free of rust, grease, and paint. Only soil which has not been in contact with the bucket may be sampled, unless the bucket is cleaned according to the procedures described in Appendix B of this SOP.

Trenches offer the capability of collecting samples from very specific intervals and allow visual correlation with vertically and horizontally adjacent material. The sample should be collected without entering the trench itself, if possible. To collect the sample without entering the trench, use a stainless steel scoop attached to rigid conduit with a scoop bracket to "dress" the wall of the trench (by removing the surface layer of soil smeared on the trench wall as the bucket passed). Replace the scoop with a clean or decontaminated scoop, and then collect the soil sample. The collected soil is placed in a pan, thoroughly mixed, (see Section 5.11.8), and placed in the appropriate sample container(s). Section 13.4 contains specific procedures for collecting and handling soil samples for volatile organic compounds analysis.

14.4 Soil/Sediment Sampling (Method 5035)

The following sampling protocol is recommended for site investigators assessing the extent of volatile organic compounds (VOCs) in soils and sediments at a project site. Because of the large number of options available, careful coordination between field and laboratory personnel is needed. The specific sampling containers and sampling tools required will depend upon the detection levels and intended data use. Once this information has been established, selection of the appropriate sampling procedure and preservation method best applicable to the investigation can be made.

14.4.1 Equipment

Soil\sediment for VOC analyses may be retrieved using the equipment specified in Section 13 of this SOP. Soil\sediment cab be collected in either the EnCore™ VOC sampler, or using a stainless steel spatula and standard 4-oz. soil VOC container. The specific sample containers and the sampling tools required will depend upon the data quality objectives established for the

ED_001670_00012770-00190

site or sampling investigation. The various methods are described below.

14.4.2 Sampling Methodology - Low Concentrations

When total VOC concentrations in the soil/sediment are expected to be less than 200 ug/kg, the samples may be collected directly with the EnCore™ sampler. When sampling directly with the EnCore™ sampler, the vial must be immediately capped. A soil/sediment sample for VOC analysis may also be collected with conventional sampling equipment (as described in Section 13 of this SOP). A sample collected in this fashion must either be placed in the final sample container (EnCore™) immediately, or the sample may be immediately placed into an intermediate sample container with no head space. If an intermediate container (usually 4-oz. soil jar) is used, the sample must be transferred to the final sample container (EnCore™) as soon as possible, and should not to exceed 30 minutes.

NOTE: After collection of the sample into either the EnCore™ sampler or other container, the sample must immediately be stored in an ice chest and cooled. EnCore™ sampler soil\sediment samples may be prepared for shipping by capping, locking and securing the sampler in a plastic bag.

14.4.3 Sampling Methodology - High Concentrations

Based upon the data quality objectives and the detection level requirements, this high level method may also be used. Specifically, the sample may be packed into a single 4-oz. glass container with a screw cap and septum seal. The sample container must be filled quickly and completely to eliminate head space. Soils\sediments containing high total VOC concentrations may also be collected as described in Section 14.4.2, and preserved using 10 mL methanol.

14.4.4 Waste Samples

Collect an un-preserved sample into a single 4–oz. glass container. Handle waste samples in accordance with Section 15 of this SOP.

14.4.5 Special Techniques and Considerations

Sample Size

While this method is an improvement over earlier ones, field investigators must be aware of an inherent limitation. Because of the extremely small sample size, sample representativeness for VOC's may be reduced compared to samples with larger volumes collected for other constituents. The sampling design and objectives of the investigation should take this into consideration.

Holding Times

Sample holding times are specified in Appendix A. Field investigators should note that the holding time for an un-preserved VOC soil/sediment sample is 48 hours. Arrangements should

ED_001670_00012770-00191

be made to ship the soil/sediment VOC samples to the laboratory by overnight delivery the day they are collected so the laboratory may preserve and\or analyze the sample within 48 hours of collection.

Percent Moisture

Samplers must ensure that the laboratory has sufficient material to determine percent moisture in the VOC soil/sediment sample to correct the analytical results to dry weight. If other analyses requiring percent moisture determination are being performed upon the sample, these results may be used. If not, a separate sample (minimum of 4-oz.) for percent moisture determination will be required.

Safety

Methanol is a toxic and flammable liquid. Therefore, methanol must be handled with all required safety precautions related to toxic and flammable liquids. Inhalation of methanol vapors must be avoided. Vials should be opened and closed quickly during the sample preservation procedure. Methanol must be handled in a ventilated area. Use protective gloves when handling the methanol vials. Store methanol away from sources of ignition such as extreme heat or open flames. The vials of methanol should be stored in a cooler with ice at all times.

Shipping

Methanol and sodium bisulfate are considered dangerous goods, therefore shipment of samples preserved with these materials by common carrier is regulated by the U.S. Department of Transportation and the International Air Transport Association (IATA). The rules of shipment found in Title 49 of the Code of Federal Regulations (49 CFR parts 171 to 179) and the current edition of the IATA Dangerous Goods Regulations must be followed when shipping methanol and sodium bisulfate. Consult the above documents or the carrier for additional information. **The shipment of the quantities of methanol and sodium bisulfate used for sample preservation falls under the exemption for small quantities.** A summary of the requirements for shipping samples follows. Refer to the CFR for a complete review of the requirements.

1. The maximum volume of methanol or sodium bisulfate in a sample container is limited to thirty (30) mls.

2. The sample container must not be full of methanol.

3. The sample container must be stored upright and have the lid held securely in place. Note that the mechanism used to hold the cap in place must be able to be completely removed so weight is not added to the sample container, as specified in Method 5035.

4. Sample containers must be packed in a sorbent material capable of absorbing spills from leaks or breakage of the sample containers.

5. The maximum sample shuttle weight must not exceed 64 pounds.

6. The maximum volume of methanol or sodium bisulfate per shipping container is 500

ED_001670_00012770-00192

milliliters.

7. The shipper must mark the sample shuttle in accordance with shipping dangerous goods in acceptable quantities.

8. The package must not be opened or altered until no longer in commerce.

COPY

Region 4
U.S. Environmental Protection Agency
Science and Ecosystem Support Division
Athens, Georgia

OPERATING PROCEDURE

Title: **Wastewater Sampling**

Effective Date: February 28, 2013	**Number:** SESDPROC-306-R3

Authors

Name: Bill Simpson
Title: Environmental Scientist
Signature: Date: 2-21-13

Approvals

Name: Danny France
Title: Chief, Enforcement and Investigations Branch
Signature: Date: 2-21-13

Name: Bobby Lewis
Title: Field Quality Manager, Science and Ecosystem Support Division
Signature: Date: 2/21/13

COPY

Revision History

The top row of this table shows the most recent changes to this controlled document. For previous revision history information, archived versions of this document are maintained by the SESD Document Control Coordinator on the SESD local area network (LAN).

History	Effective Date
SESDPROC-306-R3, Wastewater Sampling, replaces SESDPROC-306-R2 **General:** Corrected any typographical, grammatical and/or editorial errors. **Title Page:** Changed author from Liza Montalvo to Bill Simpson. Changed Enforcement and Investigations Branch Chief from Archie Lee to Danny France. Changed Field Quality Manager from Liza Montalvo to Bobby Lewis. **Revision History:** Changes were made to reflect the current practice of only including the most recent changes in the revision history. **Section 1.2:** Added the following statement: Mention of trade names or commercial products does not constitute endorsement or recommendation for use. **Section 2.2**: Item 5 was revised to reflect practice of using individual single-use preservative vials instead of preservatives prepared by ASB.	**February 28, 2013**
SESDPROC-306-R2, Wastewater Sampling, replaces SESDPROC-306-R1	**February 19, 2010**
SESDPROC-306-R1, Wastewater Sampling, replaces SESDPROC-306-R0	**November 1, 2007**
SESDPROC-306-R0, Wastewater Sampling, Original Issue	**February 05, 2007**

ED_001670_00012770-00195

COPY

TABLE OF CONTENTS

1 General Information 5

1.1 Purpose 5

1.2 Scope/Application 5

1.3 Documentation/Verification 5

1.4 References 5

1.5 General Precautions 7

1.5.1 Safety 7

1.5.2 Procedural Precautions 7

2 Special Sampling Considerations 9

2.1 Special Precautions for Wastewater Sampling 9

2.2 Sample Handling and Preservation Requirements 9

2.3 Quality Control 10

2.4 Records 10

3 General Considerations 11

3.1 Wastewater Sampling Design 11

3.2 Sampling Techniques and Equipment 11

3.3 Site Selection for Wastewater Sampling 12

3.3.1 Influent 12

3.3.2 Effluent 13

3.3.3 Pond and Lagoon Sampling 13

4 Sample Types 14

4.1 General 14

4.2 Grab Samples 14

4.3 Composite Samples 14

5 Automatic Samplers 16

5.1 General 16

5.1.1 Conventional Sampling (Inorganic Parameters) 17

5.1.2 Metals 17

5.1.3 Extractable Organic Compounds, Pesticides and PCBs 18

5.2 Automatic Sampler Security 18

5.3 Automatic Sampler Maintenance, Calibration and Quality Control 18

6 Manual Sampling 20

7 Special Sample Collection Procedures 21

7.1 Organic Compounds and Metals 21

7.2 Bacteriological 21

COPY

7.3 Immiscible Liquids/Oil and Grease *21*

7.4 Volatile Organic Compounds *22*

8 Special Process Control Samples and Tests 23

9 Supplementary Data Collection 24

COPY

1 General Information

1.1 Purpose

The purpose of this procedure is to document both general and specific procedures, methods and considerations to be used and observed when collecting wastewater samples for field screening or laboratory analysis.

1.2 Scope/Application

This document describes both general and specific methods to be used by field personnel when collecting and handling wastewater samples in the field. On the occasion that SESD field personnel determine that any of the procedures described in this section are inappropriate, inadequate or impractical and that another procedure must be used to obtain a wastewater sample, the variant procedure will be documented in the field log book, along with a description of the circumstances requiring its use. Mention of trade names or commercial products does not constitute endorsement or recommendation for use.

1.3 Documentation/Verification

This procedure was prepared by persons deemed technically competent by SESD management, based on their knowledge, skills and abilities. The procedure has been tested in practice and reviewed in print by a subject matter expert. The official copy of this procedure resides on the SESD Local Area Network (LAN). The Document Control Coordinator is responsible for ensuring the most recent version of the procedure is placed on the SESD LAN and for maintaining records of review conducted prior to its issuance.

1.4 References

California State University – Sacramento. Operation of Wastewater Treatment Plants - Volumes I, II, III. Sacramento, California.

International Air Transport Authority (IATA). Dangerous Goods Regulations, Most Recent Version

Metcalf and Eddy, Inc. 2003. Wastewater Engineering: Treatment, Disposal, and Reuse. 4th Edition, McGraw-Hill Book Co., New York, NY

SESD Operating Procedure for Control of Records, SESDPROC-002, Most Recent Version

SESD Operating Procedure for Equipment Inventory and Management (SESDPROC-104, Most Recent Version)

COPY

SESD Operating Procedure for Field Equipment Cleaning and Decontamination, SESDPROC-205, Most Recent Version

SESD Operating Procedure for Field Equipment Cleaning and Decontamination at the FEC, SESDPROC-206, Most Recent Version

SESD Operating Procedure for Field pH Measurement, SESDPROC-100, Most Recent Version

SESD Operating Procedure for Field Sampling Quality Control, SESDPROC-011, Most Recent Version

SESD Operating Procedure for Field Specific Conductance Measurement, SESDPROC-101, Most Recent Version

SESD Operating Procedure for Field Temperature Measurement, SESDPROC-102, Most Recent Version

SESD Operating Procedure for Logbooks, SESDPROC-010, Most Recent Version

SESD Operating Procedure for Packaging, Marking, Labeling and Shipping of Environmental and Waste Samples, SESDPROC-209, Most Recent Version

SESD Operating Procedure for Sample and Evidence Management, SESDPROC-005, Most Recent Version

SESD Operating Procedure for Surface Water Sampling (SESDPROC-201), Most Recent Version

SESD Operating Procedure for Wastewater Flow Measurement, SESDPROC-109, Most Recent Version

Title 40 Code of Federal Regulations (CFR), Part 136.3, Table II, Most Recent Version

US EPA. 1977. Process Control Manual: Aerobic Biological Treatment Facilities MD-14. EPA 430/09-77-006, Office of Water, Washington, D.C.

US EPA. 2000. Activated Sludge Process Control Testing. ESD, Water Compliance Unit, Athens, GA

US EPA. 2001. Environmental Investigations Standard Operating Procedures and Quality Assurance Manual. Region 4 Science and Ecosystem Support Division (SESD), Athens, GA

US EPA. 2004. National Pollutant Discharge Elimination System (NPDES) Compliance Inspection Manual

COPY

US EPA. Analytical Support Branch Laboratory Operations and Quality Assurance Manual. Region 4 SESD, Athens, GA, Most Recent Version

US EPA. April 13, 1981. Final Regulation Package for Compliance with DOT Regulations in the Shipment of Environmental Laboratory Samples. Memo from David Weitzman, Work Group Chairman, Office of Occupational Health and Safety (PM-273)

US EPA. Safety, Health and Environmental Management Program Procedures and Policy Manual. Region 4 SESD, Athens, GA, Most Recent Version

Water Environment Federation and ASCE. 1998. Design of Municipal Wastewater Treatment Plants. Manual of Practice No. 8, Fourth Edition.

Water Environment Federation. 1996. Operation of Municipal Wastewater Treatment Plants. Manual of Practice No.11, Fifth Edition

1.5 General Precautions

1.5.1 Safety

Proper safety precautions must be observed when collecting wastewater samples. Refer to the SESD Safety, Health and Environmental Management Program Procedures and Policy Manual and any pertinent site-specific Health and Safety Plans (HASP) for guidelines on safety precautions. These guidelines, however, should only be used to complement the judgment of an experienced professional. Address chemicals that pose specific toxicity or safety concerns and follow any other relevant requirements, as appropriate.

1.5.2 Procedural Precautions

The following precautions should be considered when collecting wastewater samples.

- Special care must be taken not to contaminate samples. This includes storing samples in a secure location to preclude conditions which could alter the properties of the sample. Samples shall be custody sealed during long-term storage or shipment.
- Collected samples are in the custody of the sampler or sample custodian until the samples are relinquished to another party.
- If samples are transported by the sampler, they will remain under his/her custody or be secured until they are relinquished.
- Shipped samples shall conform to all U.S. Department of Transportation (DOT) and/or International Air Transportation Association (IATA) hazardous materials shipping requirements.
- Documentation of field sampling is done in a bound logbook.

COPY

- Chain-of-custody documents shall be filled out and remain with the samples until custody is relinquished.
- All shipping documents, such as air bills, bills of lading, etc., shall be retained by the project leader and stored in a secure place.

COPY

2 Special Sampling Considerations

2.1 Special Precautions for Wastewater Sampling

- A clean pair of new, non-powdered, disposable gloves will be worn each time a different location is sampled and the gloves should be donned immediately prior to sampling. The gloves should not come in contact with the media being sampled and should be changed any time during sample collection when their cleanliness is compromised.
- Sample containers for samples suspected of containing high concentrations of contaminants shall be stored separately.
- Sample collection activities shall proceed progressively from the least suspected contaminated area to the most suspected contaminated area. Samples of waste or highly contaminated media must not be placed in the same ice chest as environmental (i.e., containing low contaminant levels) or background/control samples.
- If possible, one member of the field sampling team should take all the notes and photographs, fill out tags, etc., while the other members collect the samples.
- Field investigators must use new, verified certified-clean disposable or non-disposable equipment cleaned according to procedures contained in SESD Operating Procedure for Field Equipment Cleaning and Decontamination (SESDPROC-205) for collection of samples for trace metals or organic compound analyses.

2.2 Sample Handling and Preservation Requirements

1. All sample collection and preservation procedures will comply with the requirements outlined in *40 CFR, Part 136.3 (e),* Table II, and Figure 3-1 of the US EPA Region 4 Analytical Support Branch Laboratory Operations and Quality Assurance Manual (ASBLOQAM), Most Recent Version.

2. Wastewater samples will typically be collected either by directly filling the sample container or by using an automatic sampler or other device.

3. During sample collection, if transferring the sample from a collection device, make sure that the device does not come in contact with the sample containers.

4. Place the sample into appropriate, labeled containers. Samples collected for VOC analysis must not have any headspace (see Section 7.4, Volatile Organic Compounds). All other sample containers must be filled with an allowance for ullage.

5. All samples requiring preservation must be preserved as soon as practically possible, ideally immediately at the time of sample collection. If preserved VOC vials are used, these will be preserved with concentrated hydrochloric acid by Analytical Support Branch (ASB) personnel prior to departure for the field

COPY

investigation. For all other chemical preservatives, SESD will use the appropriate chemical preservative generally stored in an individual single-use vial as described in the SESD Operating Procedure for Field Sampling Quality Control (SESDPROC-011). The adequacy of sample preservation will be checked after the addition of the preservative for all samples, except for the samples collected for VOC analysis. If it is determined that a sample is not adequately preserved, additional preservative should be added to achieve adequate preservation.

6. All samples preserved using a pH adjustment (except VOCs) must be checked, using pH strips, to ensure that they were adequately preserved. This is done by pouring a small volume of sample over the strip. Do not place the strip in the sample. Samples requiring reduced temperature storage should be placed on ice immediately.

2.3 Quality Control

Equipment blanks should be collected if equipment is field cleaned and re-used on-site or if necessary to document that low-level contaminants were not introduced by the sampling equipment.

2.4 Records

Information generated or obtained by SESD personnel will be organized and accounted for in accordance with SESD records management procedures found in the SESD Operating Procedure for Control of Records (SESDPROC-002). Field notes, recorded in a bound field logbook, will be generated, as well as chain-of-custody documentation according to the procedures found in SESD Operating Procedure for Logbooks (SESDPROC-010) and SESD Operating Procedure for Sample and Evidence Management (SESDPROC-005).

COPY

3 General Considerations

3.1 Wastewater Sampling Design

Wastewater sampling studies focus primarily on collecting wastewater samples of the influent or effluent at domestic and non-domestic facilities. Sampling activities are usually conducted for National Pollutant Discharge Elimination System (NPDES) compliance, compliance assistance, civil and criminal investigations, and water quality studies. Collection of wastewater samples is necessary in order to obtain reliable data that can support compliance or enforcement activities.

The main considerations in developing a wastewater sampling strategy are:

- Type of study (Compliance Sampling Inspection, Diagnostic Evaluation, etc.).
- Regulated or target pollutants in the wastewater stream to be sampled.
- Selection of the projected sampling locations to satisfy the study objectives.
- Quality control criteria of the parameters to be sampled (oil and grease samples need to be collected as grab samples, trip blanks are taken into the field for the collection of samples for volatile organic compound analyses, etc.).

Complexity of the sampling program will vary with a number of factors. Some primary factors are:

- The number of sampling stations to be monitored. This will be dependent on NPDES permit requirements and the type of study (typically Toxic CSIs and DEs require a greater amount of sampling stations than a routine CSI).
- Special handling requirements of the target pollutants (sampling equipment for trace organic compounds require special cleaning procedures, etc.).
- Laboratory conducting the analyses (use of a contract laboratory may require shipping from the field, etc.).
- Accessibility to sampling stations.
- Process and operation criteria of the source generator (e.g., batch operation versus continuous discharge).
- Coordination of participating organizations in the study (e.g., state assistance with the sample collection).
- The length of time for sampling activities will dictate logistical considerations (e.g., shipment of samples, additional supplies, etc.).

3.2 Sampling Techniques and Equipment

The wastewater sampling techniques and equipment described in Sections 4 through 9 of this document are designed to minimize effects on the chemical and physical integrity of the sample. If the procedures in these sections are followed, a representative sample of the wastewater should be obtained.

COPY

The variety of conditions at different sampling locations requires that considerable judgment be exercised regarding the methodologies and procedures for the collection of representative samples of wastewater. Each sampling location warrants attention commensurate with its complexity. There are, however, basic rules and precautions generally applicable to sample collection. Acceptable procedures are generally those outlined in the *NPDES Compliance Inspection Manual*. Some important considerations for obtaining a representative wastewater sample include:

- The sample should be collected where the wastewater is well mixed. Therefore, the sample should be collected near the center of the flow channel, at approximately 40 to 60 percent of the water depth, where the turbulence is at a maximum and the possibility of solids settling is minimized. Skimming the water surface or dragging the channel bottom should be avoided. However, allowances should be made for fluctuations in water depth due to flow variations.
- In sampling from wide conduits, cross-sectional sampling should be considered. Rhodamine WT dye may be used as an aid in determining the most representative sampling locations.
- If manual compositing is employed, the individual sample portions must be thoroughly mixed before pouring the individual aliquots into the composite container. For manual composite sampling, the individual sample aliquots should be preserved at the time of sample collection.

3.3 Site Selection for Wastewater Sampling

Where applicable, wastewater samples should be collected at the location specified in the NPDES permit (if the source has a permit). In some instances the sampling location specified in the permit, or the location chosen by the permittee, may not be adequate for the collection of a representative wastewater sample. In such instances, the investigator is not limited by permit specifications and may collect a sample at a more representative location. When a conflict exists between the permittee and the regulatory agency regarding the most representative sampling location, both sites should be sampled, and the reason for the conflict should be noted in the field notes and the inspection or study report. Recommendations and reasons for a change in sampling locations should be given to the appropriate permitting authority.

3.3.1 Influent

Influent wastewaters are preferably sampled at locations of highly turbulent flow in order to ensure good mixing; however, in many instances the most desirable location is not accessible. Preferable influent wastewater sampling locations include: 1) the upflow siphon following a comminutor (in absence of grit chamber); 2) the upflow distribution box following pumping from main plant wet well; 3) aerated grit chamber; 4) flume throat; 5) pump wet well when the pump is operating; or 6) downstream of preliminary screening. When possible, influent samples should be collected upstream from sidestream returns.

COPY

3.3.2 Effluent

Effluent samples should be collected at the site specified in the permit, or if no site is specified in the permit, at the most representative site downstream from all entering wastewater streams prior to discharge into the receiving waters. If a conflict exists between the permittee and inspector regarding the source being sampled or the location of the most representative site, follow the procedures previously described in Section 3.3, Site Selection for Wastewater Sampling.

3.3.3 Pond and Lagoon Sampling

Generally, composite effluent wastewater samples should be collected from ponds and lagoons. Even if the ponds or lagoons have long retention times, composite sampling is necessary because of the tendency of ponds and lagoons to have flow paths that short circuit which changes the design detention time.

COPY

4 Sample Types

4.1 General

For NPDES sampling, two types of sampling techniques are used: grab and composite. For these procedures, the NPDES permit specifies the appropriate sample type. A complete description of all NPDES sampling procedures and techniques is presented in the *NPDES Compliance Inspection Manual*.

4.2 Grab Samples

Grab samples consist of either a single discrete sample or individual samples collected over a period of time not to exceed 15 minutes. The grab sample should be representative of the wastewater conditions at the time of sample collection. The sample volume depends on the type and number of analyses to be performed.

4.3 Composite Samples

Composite samples are collected over time, either by continuous sampling or by mixing discrete samples. A composite sample represents the average wastewater characteristics during the compositing period. Various methods for compositing are available and are based on either time or flow proportioning. The choice of a flow proportional or time composite sampling scheme depends on the permit requirements, variability of the wastewater flow or concentration of pollutants, equipment availability and sampling location. The investigator must know each of these criteria before a sampling program can be initiated. Generally, a time composite is acceptable. However, in enforcement cases where strict adherence to permit requirements are necessary, a flow proportional sample is preferable, if possible.

A time composite sample consists of equal volume discrete sample aliquots collected at constant time intervals into one container. A time composite sample can be collected either manually or with an automatic sampler.

A flow proportional composite sample can be collected using one of two methods. One method consists of collecting a constant sample volume at varying time intervals proportional to the wastewater flow. For the other method, the sample is collected by varying the volume of each individual aliquot proportional to the flow, while maintaining a constant time interval between the aliquots.

Flow proportional samples can be collected directly with an automatic sampler that is connected to a compatible flow measuring device. An automatic sampler can also be used to collect discrete samples. At the end of the compositing period, the discrete samples are composited by volume versus flow chart readings. Field personnel can use the facility's primary flow device and flow measurement system when their accuracy can be verified. Prior to collecting flow proportional samples, the facility's flow measuring

COPY

system should be examined for proper installation and accuracy according to SESD Operating Procedure for Wastewater Flow Measurement (SESDPROC-109). If the facility's primary flow measuring device does not meet standard conditions specified in SESDPROC-109 (Most Recent Version), or is in an unsafe or inaccessible location, then the investigator may choose to collect time composite samples or install a portable primary flow device. If the flow measurement system is acceptable, samples should be collected using the appropriate flow proportioning methods.

COPY

5 Automatic Samplers

5.1 General

Automatic samplers may be used to collect composite or grab samples when several aliquots are to be collected at frequent intervals or when a continuous sample is required. For composite sampling applications, the automatic samplers may be used to collect time composite or flow proportional samples. In the flow proportional mode, the samplers are activated and paced by a compatible flow meter. Flow proportional samples can also be collected using an automatic sampler equipped with multiple containers and manually compositing the individual sample portions proportional to the flow.

Automatic samplers must meet the following requirements:

- Sampling equipment must be properly cleaned to avoid cross-contamination which could result from prior use per the SESD Operating Procedure for Field Equipment Cleaning and Decontamination (SESDPROC-205).
- No plastic or metal parts of the sampler shall come in contact with the water or wastewater stream when parameters to be analyzed could be impacted by these materials.
- The automatic sampler must be capable of providing adequate refrigeration during the sampling period. This can be accomplished in the field by using ice.
- The automatic sampler must be able to collect a large enough sample for all parameter analyses.
- The individual sample aliquot must be at least 100 ml if the sampler uses a peristaltic pump.
- The automatic sampler should be capable of providing a lift of at least 20 feet and the sample volume should be adjustable since the volume is a function of the pumping head.
- The pumping velocity must be at least 2 ft/sec to transport solids and not allow solids to settle.
- The intake line leading to the pump must be purged before each sample is collected.
- The minimum inside diameter of the intake line should be 1/4 inch.
- An adequate power source should be available to operate the sampler for the time required to complete the project. Facility electrical outlets may be used if available.

COPY

- Facility automatic samplers should only be used if 1) field conditions do not allow for the installation of EPA sampling equipment, and 2) the facility sampling equipment meets all of the requirements detailed above.

Specific operating instructions, capabilities, capacities, and other pertinent information for automatic samplers are included in the respective operating manuals.

5.1.1 Conventional Sampling (Inorganic Parameters)

Conventional sampling includes all inorganic parameters (e.g., BOD_5, TSS, COD, nutrients) that can be collected using an automatic sampler.

New tubing (Silastic®, or equal, in the pump and either Teflon® or Tygon®, or equal, in the sample train) will be used for each sampler installation.

Installation procedures include cutting the proper length of tubing, positioning it in the wastewater stream, and sampler programming. Protective gloves should be worn to reduce exposure and to maintain the integrity of the sample.

For a time composite sample, the sampler should be programmed to collect sufficiently sized aliquots (at least 100-milliliter if using a peristaltic pump) at a frequency that provides a representative sample and enough sample volume to conduct all required analyses.

For a flow proportional sample, the sampler should be programmed to collect a minimum of 100 milliliters for each sample aliquot with the interval predetermined based on the flow of the monitored stream.

At the end of the compositing period, the sample collected should be properly mixed and transferred into the respective containers, followed by immediate preservation, if required. For routine inspections, the permittee should be offered a split sample.

5.1.2 Metals

When an automatic sampler is used for collecting samples for metals analyses, the entire sample collection system should be rinsed with organic-free water and an equipment blank should be collected. Approximately one-half gallon of rinse water should be pumped through the sample tubing into the composite container and discarded. Nitric acid must be added to the metals blank container for proper preservation. The sampler may then be positioned in the appropriate location and the sampler program initiated.

If the automatic sampler tubing is attached to a metal conduit pipe, the intake tubing should be carefully installed upstream and away from the conduit to prevent metals contamination. This can be accomplished by clamping the tubing

upstream of the conduit using laboratory clamps and wrapping the submerged portion of conduit pipe with a protective barrier (e.g., duct tape).

5.1.3 Extractable Organic Compounds, Pesticides and PCBs

When an automatic sampler is used for collecting samples for the analyses of extractable organic compounds, pesticides and/or PCBs, the installation procedures include cutting the proper length of new Teflon® tubing, rinsing of the entire sampler collection system with organic-free water and collection of appropriate equipment blanks for organic compounds analysis. For the organic-free water rinse, approximately one-half gallons is initially pumped into the composite sample container and discarded. An additional one and one-half gallons (approximate) are then pumped into the composite sample container for distribution into the appropriate blank container. Finally, the collection tubing should be positioned in the wastewater stream and the sampler programmed and initiated.

5.2 Automatic Sampler Security

Field investigators should take whatever steps are necessary to prevent tampering with EPA equipment. A lock or custody seal may be placed on the sampler to detect tampering. However, this does not prevent tampering with the sample collection tubing. If necessary, seals may be placed on the sampling pole and tubing line to further reduce tampering possibilities.

5.3 Automatic Sampler Maintenance, Calibration and Quality Control

To ensure proper operation of automatic samplers, and thus the collection of representative samples, the following maintenance and calibration procedures should be used and any deviations should be documented in the field logbook.

Prior to being used, the sampler operation should be checked by the field investigator or Field Equipment Center personnel to ensure proper operation. This includes operation (forward, reverse, and automatic) of at least one purge-pump-purge cycle; checking desiccant and replacing if necessary; checking the 12-volt batteries to be used with the sampler; and repairing any item if necessary.

During each field trip, prior to initiating the automatic sampler, the rinse and purge-pump-purge cycle shall be checked at least once. The pumping volume should be checked at least twice using a graduated cylinder or other calibrated container prior to initiating the sampler. For flow proportional sampling, the flow meter that activates the sampler should be checked to ensure that it operates properly.

Upon returning from a field trip, the structural integrity of the sampler should be examined and repaired, if necessary. The desiccant will be checked and replaced if appropriate. The operation (forward, reverse, automatic, etc.) will be checked and required repairs will be made and documented. The sampler will then be cleaned as

COPY

outlined in SESD Operating Procedures for Field Equipment Cleaning and Decontamination (SESDPROC-205).

The automatic sampler should be checked against the manufacturer's specifications and documented whenever one or more of the sampler functions appear to be operating improperly.

COPY

6 Manual Sampling

Manual sampling is normally used for collecting grab samples and/or for immediate in-situ field analyses. However, it can also be used in lieu of automatic equipment over extended periods of time for composite sampling, especially when it is necessary to evaluate unusual waste stream conditions.

The best method to manually collect a sample is to use the actual sample container which will be used to transport the sample to the laboratory. This eliminates the possibility of contaminating the sample with intermediate collection containers. If the water or wastewater stream cannot be physically reached by the sampling personnel or it is not safe to reach for the sample, an intermediate collection container may be used, from which the sample can be redistributed to other containers. If this is done, however, the container used to collect the sample must be properly cleaned according to the SESD Operating Procedure for Field Equipment Cleaning and Decontamination (SESDPROC-205) and must be made of a material that meets the requirements of the parameter(s) being investigated. Samples for oil and grease, bacteria, and most volatile compounds (both organic and inorganic; see Section 7.4 for specific requirements) must always be collected directly into the sample container.

In some cases it may be best to use a pump, either power or hand operated, to withdraw a sample from the water or wastewater stream. If a pump is used, it is imperative that all components of the pump that come in contact with the sample are properly cleaned according to the SESD Operating Procedure for Field Equipment Cleaning and Decontamination (SESDPROC-205) to ensure the integrity of the sample.

In general, samples are manually collected by first selecting a location in the wastestream that is well mixed then dipping the container in the water or wastewater stream so the mouth of the container faces upstream. The container should not be overfilled if preservatives are present in the container.

COPY

7 Special Sample Collection Procedures

7.1 Organic Compounds and Metals

Trace organic compounds and metals detection limits are usually in the parts per billion or parts per trillion ranges, so extreme care must be exercised to ensure sample integrity. All containers, composite bottles, tubing, etc, used for sample collection for trace organic compounds and metals analyses should be prepared as described in the SESD Standard Operating Procedure for Field Equipment Cleaning and Decontamination at the FEC (SESDPROC-206).

When possible, the sample should be collected directly into the appropriate sample container. If the material to be sampled cannot be physically reached, an intermediate collection device may be used. This should be a Teflon®, glass or stainless steel (for non-metals only) vessel on a pole or rope, or Teflon® tubing via a peristaltic type pump and a Teflon® vacuum container attachment which converts a sample container into a vacuum container. The device which is used should be cleaned as described in the SESD Operating Procedure for Field Equipment Cleaning and Decontamination (SESDPROC-205).

Sample collection for trace-level mercury analysis will be conducted in accordance with the SESD Operating Procedure for Surface Water Sampling (SESDPROC-201). This procedure is based on EPA Method 1669.

7.2 Bacteriological

Samples for bacteriological analyses must always be collected directly into the prepared glass or plastic sample container. The sample container should be kept unopened until it is to be filled. When the cap is removed, care should be taken not to contaminate the cap or the inside of the bottle. The bottle should be held near the base and filled to within about one inch of the top without rinsing and recapped immediately. During sample collection, the sample container should be plunged with the neck partially below the surface and slightly upward. The mouth should be directed against the current. Preservation procedures and holding times are found in the ASBLOQAM.

When the sample container must be lowered into the waste stream, either because of safety or impracticality (manhole, slippery effluent area, etc.), care must be taken to avoid contamination.

7.3 Immiscible Liquids/Oil and Grease

Oil and grease may be present in wastewater as a surface film, an emulsion, a solution or as a combination of these forms. Since it is very difficult to collect a representative sample for oil and grease analysis, the inspector must carefully evaluate the location of the sampling location. The most desirable sampling location is the area of greatest mixing. Quiescent areas should be avoided. The sample container should be plunged into the wastewater using a swooping motion with the mouth facing upstream. Care should be taken to ensure that the bottle does not over fill during sample collection.

Because losses of oil and grease will occur on sampling equipment, an automatic sampler should not be used to collect samples for oil and grease analysis. Individual portions collected at prescribed time intervals must be analyzed separately to obtain the average concentrations over an extended period.

7.4 Volatile Organic Compounds

Samples to be analyzed for volatile organic compounds (VOCs) should be collected in 40-ml septum vials with screw caps with a Teflon®-lined silicone disk (septum) in the cap to prevent contamination of the sample by the cap. Samples for VOC analysis must be collected using either stainless steel or Teflon® equipment.

When sampling for VOCs, triplicate samples should always be collected from each location. The investigator should determine if the water to be sampled contains chlorine. If the water contains no chlorine, three pre-preserved 40-ml vials should be filled with the sample. The samples may be held for up to 14 days before analysis. When preservation is not feasible, samples can be held up to 7 days before analysis. In the great majority of cases, the preserved vials are used to take advantage of the extended holding time. In some situations, however, it may be necessary to use the unpreserved vials. For example, if the wastewater sample contains a high concentration of dissolved calcium carbonate, there may be an effervescent reaction between the hydrochloric acid and the water, producing large numbers of fine bubbles. This will render the sample unacceptable. In this case, unpreserved vials should be used and arrangements must be confirmed with the laboratory to ensure that they can accept the unpreserved vials and meet the shorter sample holding times.

If the water contains chlorine, collect the sample in an 8-ounce sampling container with 2 drops of a 25% ascorbic acid solution (the jar with acid should be obtained from the SESD laboratory prior to sample collection). Cap and mix thoroughly but gently by swirling to eliminate residual chlorine. Transfer the sample to three pre-preserved 40-ml vials. The ascorbic acid and preservative must be added in this order and in two separate steps.

The 40-ml vials should be completely filled to prevent volatilization, and extreme caution should be exercised when filling each vial to prevent any turbulence which could also produce volatilization. The sample should be carefully poured down the side of the vial to minimize turbulence. As a rule, it is best to gently pour the last few drops into the vial so that surface tension holds the water in a "convex meniscus." The cap is then applied and some overflow is lost, but air space in the bottle is eliminated. After capping, turn the bottle over and tap it to check for bubbles. If a bubble or bubbles are present, the vial should be topped off using a minimal amount of sample to re-establish the meniscus. Care should be taken not to flush any preservative out of the vial during topping off. If, after topping off and capping the vial, bubbles are still present, a new vial should be obtained and the sample re-collected.

COPY

8 Special Process Control Samples and Tests

During diagnostic evaluations, process control tests may be conducted to evaluate and troubleshoot the performance of the biological treatment processes of a municipal or industrial wastewater treatment facility. The EPA *Activated Sludge Process Control Manual* is the standard reference used by EPA inspectors for activated sludge process control testing. The manual includes a complete description of the step-by-step procedures for each test and the interpretation of the results. The six basic activated sludge process control tests are:

- Sludge settleability (settlometer)
- Centrifuge spins
- Aeration basin Dissolved Oxygen (DO) profiles
- Oxygen uptake rate (OUR) measurements
- Mixed liquor microscopic examinations
- Sludge blanket depth (SBD) measurements

Additional references are available that provide a more comprehensive evaluation of the methods used to conduct a diagnostic evaluation.

COPY

9 Supplementary Data Collection

While conducting wastewater sampling, the following information will also be obtained (if applicable):

- Field measurements -- pH, dissolved oxygen, total residual chlorine, conductivity and temperature
- Flows associated with the samples collected -- continuous flows with composite samples and instantaneous flows with grab samples
- Diagrams and/or written descriptions of the wastewater treatment systems (if available).
- Photographs of pertinent wastewater associated equipment, such as flow measuring devices, treatment units, etc. (keep photolog as specified in the SESD Operating Procedure for Logbooks (SESDPROC-010)).
- Process control information on the wastewater treatment process (if applicable).
- Completion of applicable forms required during specific investigations.

All observations, measurements, diagrams, etc., will be entered in bound field logbooks or as specified in the SESD Operating Procedure for Logbooks (SESDPROC-010).

ALS Standard Operating Procedure

DOCUMENT TITLE:	PERFLUORINATED COMPOUNDS BY HIGH PERFORMANCE LIQUID CHROMATOGRAPHY/TANDEM MASS SPECTROMETRY (HPLC/MS/MS)
REFERENCED METHOD:	N/A
SOP ID:	LCP-PFC
REVISION NUMBER:	5
EFFECTIVE DATE:	12/21/2015

ALS Environmental

PERFLUORINATED COMPOUNDS BY HIGH PERFORMANCE LIQUID CHROMATOGRAPHY/TANDEM MASS SPECTROMETRY (HPLC/MS/MS)

ALS-KELSO

SOP ID:	LCP-PFC	Rev. Number:	5	Effective Date:	12/21/2015

Approved By: _____ Date: 12/14/15
Department Manager/Technical Director – Jon James

Approved By: _____ Date: 12/14/15
QA Manager – Carl Degner

Approved By: _____ Date: 12/15/15
Laboratory Director – Jeff Grindstaff

Issue Date: _____	Doc Control ID#: _____	Issued To: _____

ANNUAL REVIEW

SIGNATURES BELOW INDICATE NO PROCEDURAL CHANGES HAVE BEEN MADE TO THE SOP SINCE THE APPROVAL DATE ABOVE. THIS SOP IS VALID FOR TWELVE ADDITIONAL MONTHS FROM DATE OF THE LAST SIGNATURE UNLESS INACTIVATED OR REPLACED BY SUBSEQUENT REVISIONS.

Signature	Title	Date
Signature	Title	Date
Signature	Title	Date
Signature	Title	Date

TABLE OF CONTENTS

1.SCOPE AND APPLICATION 3
2.METHOD SUMMARY 3
3.DEFINITIONS 3
4.INTERFERENCES 5
5.SAFETY 5
6.SAMPLE COLLECTION, CONTAINERS, PRESERVATION AND STORAGE 6
7.STANDARDS, REAGENTS, AND CONSUMABLE MATERIALS 6
8.APPARATUS AND EQUIPMENT 8
9.PREVENTIVE MAINTENANCE 9
10.RESPONSIBILITIES 10
11.PROCEDURE 10
12.QA/QC REQUIREMENTS 15
13.DATA REDUCTION AND REPORTING 18
14.CONTINGENCIES FOR HANDLING OUT-OF-CONTROL OR UNACCEPTABLE DATA 19
15.METHOD PERFORMANCE 20
16.POLLUTION PREVENTION AND WASTE MANAGEMENT 20
17.TRAINING 20
18.Method Modifications 21
19.REFERENCES 21
20.CHANGES SINCE THE LAST REVISION 21

PERFLUORINATED COMPOUNDS BY HIGH PERFORMANCE LIQUID CHROMATOGRAPHY/TANDEM MASS SPECTROMETRY (HPLC/MS/MS)

1. SCOPE AND APPLICATION

1.1. This Standard Operating Procedure (SOP) describes the method used for trace analysis of Perfluorinated Compounds (PFC's) by high performance liquid chromatography/tandem mass spectrometry (HPLC/MS/MS). A list of analyte acronyms is given in Table 1. This method describes both the extraction and chromatographic procedures used to determine the target analytes and reporting limits listed in Table 2.

1.2. This procedure is used to determine the analytes of interest in water, solid, and tissue matrices. The procedure may be applied to other miscellaneous sample matrices providing that the analyst demonstrates the ability of the procedure to give data of acceptable quality in that matrix. The Method Reporting Limits (MRLs) for target analytes are presented in Table 2.

2. METHOD SUMMARY

2.1. Analytes of interest in water are extracted using solid phase extraction for water, and solvent extraction for solids. Extracts are evaporated with gentle stream of nitrogen, and reconstituted in methanol prior to analysis. This procedure provides high performance liquid chromatographic (HPLC) reversed phase chromatographic conditions and tandem mass spectrometry conditions for the analysis of these compounds by ESI conditions.

2.2. This group of compounds will provide a broad view of common perfluorinated compounds (PFC's) found in the environment. This procedure provides low ng/L (ppt) determination for these analytes in water, and low ng/g in solid samples.

3. DEFINITIONS

3.1. Analysis Sequence - Samples are analyzed in a set referred to as an analysis sequence. The sequence begins with instrument calibration (initial or continuing verification) followed by sample extracts interspersed with calibration standards (CCBs, CCVs, etc...) The sequence ends when the set of samples has been injected or when qualitative and/or quantitative QC criteria indicate an out-of-control situation.

3.2. Atmospheric Pressure Chemical Ionization (APCI) – A vapor phase ionization mode for HPLC/MS/MS in which the mobile phase is desolvated by high temperatures prior to ions being formed. A corona discharge needle produces reagent ion plasma primarily made up of charged mobile phase vapor. The sample vapor is ionized by ion-molecular reactions with the reagent ions in the plasma. This ionization may be used in either the positive (producing [M+H]+ ions) or negative (producing [M-H]-) mode.

3.3. Electrospray Ionization (ESI) – A liquid phase ionization mode for HPLC/MS/MS in which the ions are formed in solution before the mobile phase is desolvated. A proton donor such as acetic or formic acid, or a proton acceptor such as ammonium hydroxide are commonly added to the mobile phase. A potential is applied to the electrospray needle to assist in

ionization of the solution prior to desolvation. This ionization may be used in either the positive (producing [M+H]+ ions) or negative (producing [M-H]-) mode.

3.4. Independent Calibration Verification (ICV) - Initial calibration verification standards which are analyzed after initial calibration with newly prepared standards but prior to sample analysis, in order to verify the validity of the standards used in calibration. The ICV standards are prepared from a materials obtained from a source different from that used to prepare calibration standards, or prepared from neat material by a second analyst.

3.5. Internal Standard – Internal standards are organic compounds which are similar to the analytes of interest, but which are not found in the samples. The chosen internal standards are used to help calibrate the instrument's response and to compensate for slightly different injection amounts onto the instrument, and varying ion suppression in the source.

3.6. Matrix Spike/Duplicate Matrix Spike (MS/DMS) Analysis - In the matrix spike analysis, predetermined quantities of target analytes are added to a sample matrix prior to sample extraction and analysis. The purpose of the matrix spike is to evaluate the effects of the sample matrix on the method used for the analysis. Samples are split into duplicates, spiked, and analyzed. Percent recoveries are calculated for each of the analytes detected. The relative percent difference (RPD) between the samples is calculated and used to assess analytical precision. The concentration of the spike should be at 5 to 10 times the MRL or at levels specified by a project analysis plan.

3.7. Standard Curve - A standard curve is a calibration curve which plots concentrations of a known analyte standard versus the instrument response to the analyte. Other calibration models may be used as described in the calibration section of this SOP. The appropriate criteria for assessing the validity of the calibration curve must be followed prior to quantitation of target analytes in actual sample analyses.

3.8. Single Reaction Monitoring (SRM) – A HPLC/MS/MS technique where most background noise/interfering compound are filtered out by the tandem mass spectrometer. SRM mode allows only one parent ion (generally the [M+H]+ ion in positive mode and the [M-H]- ion in negative mode) through the first quadrapole. In the collision cell (Q2) the parent ion is fragmented. In the third quadrapole (Q3) all ions except the quantitation fragment (product ion) are filtered out. The only ions that are allowed through the instrument are ions that have the same parent mass producing the same product mass during a particular segment of analysis time. This analysis segment is specified for a particular retention time range that corresponds to the retention time of a certified standard.

3.9. Surrogate - Surrogates are organic compounds which are similar to analytes of interest in chemical composition, extraction and chromatography, but which are not normally found in environmental samples. The purpose of the surrogates is to evaluate the preparation and analysis of samples. These compounds are spiked into all blanks, standards, samples and spiked samples prior to extraction and analysis. Percent recoveries are calculated for each surrogate.

3.10. Method Blank (MB) - The method blank is an artificial sample composed of analytefree water, tissue or solid matrix (sodium sulfate or sand) and is designed to monitor the introduction of artifacts into the analytical process. The method blank is carried through the entire analytical procedure.

3.11. Laboratory Control Samples (LCS) – The LCS is an aliquot of analyte free water or analyte free solid to which known amounts target analytes are added. The LCS is prepared and analyzed in exactly the same manner as the samples. The percent recovery is compared to established limits and assists in determining whether the batch is in control.

3.12. Continuing Calibration Verification Standard (CCV) - A mid-level standard injected into the instrument at specified intervals. Used to verify that the initial calibration curve is still valid for quantitative purposes.

3.13. Instrument Blank (CCB) - The instrument blank (also called continuing calibration blank) is a volume of clean solvent analyzed on each column and instrument used for sample analysis. The purpose of the instrument blank is to determine the levels of contamination associated with the instrumental analysis itself, particularly with regard to the carry-over of analytes from standards or highly contaminated samples into subsequent sample analyses.

4. INTERFERENCES

4.1. The reporting limits for these analytes are in the low ng/L level. PFC's are organic compounds used in the manufacture of PTFE as well as a wide variety of common products in household use, therefore, contamination is a concern when conducting this method. Solvents, reagents, glassware and other sample processing hardware may yield discrete artifacts and/or elevated baselines, causing misinterpretation of the chromatograms. All of these materials must be demonstrated to be free from interferences.

4.2. The compounds listed in Table 2 have been chromatographically resolved adequately for quantitation purposes.

4.3. Raw LC/MS/MS data from all blanks, samples, and spikes must be evaluated for interferences. Determine if the source of interference is in the preparation of the samples. Corrective action should be taken to eliminate the interferences.

4.4. Contamination by carryover can occur whenever high-concentration and low-concentration samples are sequentially analyzed. To reduce carryover, the sample injection syringe must be rinsed out between samples with solvent. Whenever an unusually concentrated sample is encountered, it should be followed by the analysis of a solvent blank to check for cross contamination.

5. SAFETY

5.1. All appropriate safety precautions for handling solvents, reagents and samples must be taken when performing this procedure. This includes the use of personal protective equipment, such as, safety glasses, lab coat and the correct gloves.

5.2. Chemicals, reagents and standards must be handled as described in the ALS safety policies, approved methods and in MSDSs where available. Refer to the ALS Environmental, Health and Safety Manual and the appropriate MSDS prior to beginning this method.

5.3. The toxicity or carcinogenicity of each compound or reagent used in this method has not been precisely determined; however, each chemical compound should be treated as a potential health hazard. Exposure to these compounds should be reduced to the lowest possible level. A reference file of material safety data sheets is available to all personnel

involved in these analyses. ALS also maintains a file of OSHA regulations regarding the safe handling of the chemicals specified in this method

5.4. Persons performing sample preparation must have successfully completed the blood born pathogen training and have had appropriate vaccinations.

6. SAMPLE COLLECTION, CONTAINERS, PRESERVATION AND STORAGE

6.1. Sample Collection - Containers for sample collection must be entirely free of any PTFE or other perfluorinated compounds. Highly acidic or basic samples may react with aluminum foil lid liners, causing eventual contamination of the sample. Plastic containers or lids may be used for the storage of samples.

6.2. Sample Preservation and Storage - Samples must be iced or refrigerated at 4 ± 2°C from time of collection until extraction. Sample extracts must be stored in the dark at 4 ± 2°C. Whenever possible, amber glassware should be used to contain the sample extract during all phases of preparation. All sample extracts should be stored in amber culture tubes or in amber autosampler vials.

6.3. Water samples must be extracted within 14 days of sampling. Extracts are stored under refrigeration until analysis and must be analyzed within 40 days of extraction.

7. STANDARDS, REAGENTS, AND CONSUMABLE MATERIALS

7.1. Reagents

7.1.1. Reagent grade chemicals shall be used in all tests. Unless otherwise indicated, it is intended that all reagents shall conform to the specifications of the Committee on Analytical Reagents of the American Chemical Society, where such specifications are available. Other grades may be used, provided it is first ascertained that the reagent is of sufficiently high purity to permit its use without lowering the accuracy of the determination.

7.1.2. Acetonitrile, CH_3CN - HPLC grade.

7.1.3. Methanol, CH_3OH – reagent grade and/or HPLC grade.

7.1.4. Acetic Acid (Glacial), HPLC grade.

7.1.5. Methyl tertiary-butyl ether (MTBE), $C_5H_{12}O$ – reagent grade.

7.1.6. Ammonium Acetate – Mass spectrometry grade >99% (Fluka 73594-25g-F)

7.1.7. Negative mode Aqueous Mobile Phase, (A) 5mM ammonium acetate in water.

7.1.8. Organic-free reagent water – No interferents or contaminants may be observed at greater than ½ the MRL. Reagent water must not come in contact with any PFC's.

7.1.9. Sodium Acetate (Acetate Buffer) Sigma Aldrich P/N:S8750500G.

7.1.10. Ammonium Hydroxide LC/MS grade, Fluka, P/N"44273100ml-F.

7.1.11. Acetic Acid LC/MS grade, Fluka, P/N 49199-50ml-F.

7.2. Standards

7.2.1. A stock native standard solution mixture is purchased from Wellington Laboratories. This standard (CAT# PFAC-MXB) contains most target analyte perfluorinated acids listed in table 1, in methanol at a concentration of 2 µg/ml. Additional compounds are added from individual purchased standards in addition to the mix specified above. The vendor-assigned expiration date is used.

7.2.2. The working intermediate standard solutions are prepared in methanol from the stock standard, using appropriate syringe and volumetric flasks. Intermediate standard solutions are stored in amber bottles/vials and may be used for up to 6 months from the date of preparation.

7.2.3. Calibration standards

7.2.3.1. A minimum of five concentration levels, are prepared in methanol. The lowest calibration standard must represent a sample concentration at or below the MRL and the other standards must bracket the concentration ranges expected in samples. The nominal initial calibration concentrations calibration levels are 0.020 ng/ml, 0.050 ng/ml, 0.10 ng/ml, 0.25 ng/ml, 0.50 ng/ml, 1.0 ng/ml, 5.0 ng/ml, 10 ng/ml, 20 ng/ml, and 50 ng/ml.

7.2.3.2. The last step in calibration standard preparation is the addition of internal standard solution. These solutions must be refrigerated and may be used for up to 6 months.

7.2.3.2.1. For water analysis, add 10 µl of 500 ng/ml d_3-N-MeFOSA internal standard solution to all calibration standards. This results in an IS concentration of 5 ng/ml.

7.2.3.2.2. For soils and tissue analysis, add 10 µl of 5 µg/ml d_3-N-MeFOSA internal standard solution to all calibration standards. This results in an IS concentration of 50 ng/ml.

7.2.4. The ICV standard is prepared in methanol. Subsequently, 10 µl of the appropriate internal standard is added. The ICV is used to check the initial calibration curve. This solution must be refrigerated and may be used for up to 6 months. At this time the laboratory has not been able to obtain an ICV from an independent source from the calibration standards. This ICV is prepared from a solution mixture purchased from Wellington Laboratories that is a different lot number from the calibration mixture.

7.2.5. The Continuing Calibration Verification (CCV) standard is a mid-level standard used to verify the working calibration curve. CCVs are prepared the same as for calibration standards described above. They must be refrigerated and may be used for up to 6 months.

7.2.6. Internal Standard Solution: The internal standard is N-methyl-d_3-perfluoro-1-octanesulfonamide (d3-N-MeFOSA).

7.2.6.1. Water samples - The nominal concentration of the standard is 5.0 ng/ml.

7.2.6.2. Soil and tissue samples - The nominal concentration of the standard is 50 ng/ml.

7.2.6.3. Store at 4°C or less when not being used. When using premixed certified solutions, store according to the manufacturer's recommendations.

7.2.7. Surrogate spiking solution is a pre-mixed isotope standard MPFAC-MXA at 2 µg/mL in methanol. Additional surrogates for water analysis require a solution at 2 µg/ml be made from individual labeled compounds in addition to the mix specified above.

7.2.7.1. Soil and tissue samples are spiked with 20 µL of 2 ppm surrogates prior to extraction. This equates to a level of 20 ng/mL contained in the extract.

7.2.7.2. Water samples are spiked with 20 µl of 2 ppm surrogate solution prior to extraction. This equates to a level of 5 ng/ml.

7.2.8. Matrix spiking solutions should be prepared in methanol and spiked at such a level that the concentration in the spiked sample is at five to ten times the Method Reporting Limit (MRL). All target analytes should be included and the recoveries reported.

7.2.9. Continuing calibration blanks (CCB) are methanol.

8. APPARATUS AND EQUIPMENT

8.1. High Performance Liquid Chromatograph (HPLC) system

8.1.1. Analytical system complete with gradient pumping capability, mass spectrometer detector, column heater, and data system. Shimadzu Prominence HPLC withABSciex API 5000 MS/MS detector or equivalent.

8.1.2. Analytical column:

8.1.2.1. Water samples - Phenomenex Kinetex 2.6 µm EVO C18, 100x4.6mm, P/N: 00D-4725-EO.

8.1.2.2. Soil and tissue samples – Phenomenex Kinetex 2.6 µm XB-C18, 75 mm x 4.6 mm, P/N: 00C-4496-E0.

8.1.3. The Shimadzu HPLC pump should have a Waters Acquity PFC Isolator Column PN# 186004476 installed before the injector but after the solvent mixer. This column will delay elution of instrumental PFC contaminants, resolving these interferences from sample PFCs. The isolator column will significantly increase pump backpressure, but should remain operational.

8.2. 250mL high density polyethylene (HDPE) bottles.

8.3. Waters® HLB solid phase extraction (SPE) cartridges, or equivalent.

8.4. Phenomenex Strata XL-AW 100 µm Polymeric Anion Exchange cartridge, 100 mg/6 ml, Tubes, P/N: 8B-S051-FCH.

8.5. Balance capable of measurements of ±0.0001 g.

8.6. Disposable cartridge filters, ≤0.45µm nylon filter 10mm diameter.

8.7. Disposable graduated and Pasteur pipettes, appropriate sizes.

8.8. N-EVAP Nitrogen Evaporation Unit.

8.9. Autosampler Vial, 1.8 ml amber glass- inject vials with polypropylene (non-Teflon) lined aluminum crimp tops.

9. PREVENTIVE MAINTENANCE

9.1. All maintenance activities are recorded in a maintenance logbook kept for each instrument. Pertinent information (serial numbers, instrument I.D., etc.) must be in the logbook. Maintenance entries should include date, symptom of problem, corrective actions, and description of maintenance, date, and name. The log should contain a reference to return to analytical control.

9.2. HPLC System

9.2.1. Mobile phase - Mobile phase solvents are vacuum degassed online

9.2.2. The analytical column is back-flushed when required, usually due to a dirty column. The main indicators of dirty columns are excessive system pressure and changes to chromatography (poor peak shape and/or retention time shift).

9.2.3. Over time, the column will exhibit poorer overall performance, as contaminated sample matrices are analyzed. The length of time for this to occur will depend on the samples analyzed. When a noticeable decrease in column performance is evident and other maintenance options do not result in improvement, the column should be replaced. This is especially true when evident in conjunction with calibration difficulties.

9.3. MS/MS system

9.3.1. The ion transfer tube should be removed following the manufacturer's instructions and cleaned when needed, such as if a noticeable decrease insignal is apparent.

9.3.2. The inlet assembly including Q00 should be removed following the manufacturer's instructions and cleaned monthly or more often if dirty matrices are analyzed.

9.3.3. The fore pump should be ballasted weekly, and the pump oil should be changed every three months.

9.4. The instrument should be recalibrated following major maintenance events such as installation of a new column.

10. RESPONSIBILITIES

10.1. It is the responsibility of the analyst to perform the analysis according to this SOP and to complete all documentation required for data review. Analysis and interpretation of the results are performed by personnel in the laboratory who have demonstrated the ability to generate acceptable results utilizing this SOP. This demonstration is in accordance with the training program of the laboratory. Final review and sign-off of the data is performed by the department supervisor/manager or designee.

10.2. It is the responsibility of the department supervisor/manager to document analyst training, as described in SOP *ALS-Kelso Training Procedure* (ADM_TRAIN). Documenting method proficiency is also the responsibility of the department supervisor/manager.

11. PROCEDURE

11.1. Sample Preparation – aqueous samples

11.1.1. Water/aqueous samples are prepared using Solid Phase Extraction (SPE). Assemble the manifold/trap/vacuum pump apparatus. The collection vials and SPE cartridge should be labeled with the appropriate sample ID information.

11.1.2. Use 250 ml of sample and pH adjust the sample with LC/MS grade Acetic Acid to 3.5 ±0.1. Add 20 µl of 2 ppm surrogate solution, and 20 µl or 2 ppm spikes to LCS/MS/DMS.

11.1.3. Condition a 5 ml 200 mg Strata XL-AW cartridge with the following:

11.1.3.1. 6 ml of 0.1% NH_4O in methanol.

11.1.3.2. 6 ml of methanol.

11.1.3.3. 2 x 6 ml of water.

Do not let the cartridge go dry at any point during the conditioning process.

11.1.4. Load the sample onto the cartridge at a flow rate of 5-10 ml/min. Extraction of a 250 ml aqueous sample will take 30-90 minutes, thus use of a multi-position extraction manifold is desirable. Wash the SPE cartridge with 6 ml of 25 mM Acetate Buffer pH 4 (pH adjusted with LC/MS grade Acetic acid) in water.

Note: If the sample contains considerable solids, the SPE cartridge may plug before the entire sample is passed through. If it appears this will happen, prepare a smaller sample size. If the disk plugs, filter as much sample as is reasonably possible and record the amount of sample not extracted. From this, the amount of sample extracted and the correct surrogate amount can be determined. Archive the remaining sample and continue with the extracted sample.

11.1.5. Dry the cartridges for 5-10 minutes.

11.1.6. Rinse the sample transfer line with 4.5 ml of methanol into the sample bottle and rinse the bottle with methanol. Elute the analytes by gravity with the first fraction of methanol rinsate into a clean test tube. Allow the methanol to fully elute through the cartridge until there is no methanol on top of the sorbent bed. Rinse the sample transfer line with 4.5 ml of 0.1% Ammonium hydroxide in methanol into the sample bottle and rinse the bottle. Elute the analytes by gravity into the same test tube. Apply vacuum to ensure all solvent has been pulled through the SPE cartridge.

11.1.7. Add 10 µl of LC/MS grade Acetic acid to all extracts and vortex to mix

11.1.8. Bring all vials up to a final volume of 8 ml with methanol.

11.1.9. Transfer 990 µl of sample to a culture tube and add 10 µl or 500 ppb IS solution

11.1.10. Vortex the culture tube and filter the extract with a nylon filter into a labeled autosampler vial. Cap with a poly cap.

11.2. Sample Preparation – Solid samples

11.2.1. Weigh 1 g of each sample into clean 50 ml polypropylene centrifuge tubes.

11.2.2. The LCS, DLCS and method blank are prepared weighing 1g of "blank solid matrix" into a clean 50 ml polypropylene centrifuge tube. 20 µl of the 2 µg/ml surrogate spiking solution is added to each sample, and 20 µl of the 2 µg/ml matrix spiking solution is added to the MS, DMS and LCS samples.

11.2.3. A 20 mL aliquot of 1% acetic acid in acetonitrile (aq) is added to each sample and the samples are sonicated for an hour at room temperature.

11.2.4. A 10 mL aliquot is transferred to a clean culture tube.

11.2.5. Concentrate the extract to dryness under a gentle stream of nitrogen in a water bath held at 50 ± 5°C.

11.2.6. Add 1 ml of methanol to the extracts, including the blank and LCS aliquots.

11.2.7. Spike the extracts with the instrument internal standard and vortex the extract.

11.2.8. Filter the extract through a ≤0.45 µm nylon filter. Do not use PTFE filters.

11.2.9. Transfer each extract to an LC/MS/MS autosampler vial for analysis

11.3. Sample Preparation – Tissue Samples

11.3.1. All tissue samples are homogenized and freeze dried prior to extraction. Refer to SOP MET-TISP.

11.3.2. Weigh out 0.5 g of dried tissue (2.5 g wet weight) into a clean 30 ml polypropylene centrifuge tubes.

11.3.3. The LCS, and DLCS are prepared by weighing 0.5 g of clean tissue (e.g. Salmon fillet) into a clean 30 ml polypropylene centrifuge tube. 20 µl of the 2 µg/mL surrogate spiking solution is added to each sample, and 50 µl of the 400 µg/L matrix spiking solution is added to the MS, DMS and LCS samples.

11.3.4. A 10 mL aliquot of 1% acetic acid in acetonitrile (aq) is added to each sample, the samples are vortexed, and then sonicated for an hour at room temperature.

11.3.5. Condition a SPE HLB cartridge by eluting it with 10 ml of methanol, and 6 ml of reagent water. Discard these eluants. Do not let the cartridge go dry at any point during the conditioning process.

11.3.6. To load the sample on the cartridge. In a 50 ml eccentric tip syringe add 20 ml of HPLC grade water followed by a 5 ml aliquot of the sample. Add another 25 ml of HPLC grade water. Load the sample onto the cartridge at a flow rate of 510 ml/min.

11.3.7. Dry the cartridges under vacuum for approximately 5 minutes.

11.3.8. Elute the analytes with 10 mL methanol, making sure that all sides of the 50 ml eccentric tip syringe are rinsed. Initiate the elution by vacuum and complete the elution by gravity. Collect the eluant in a clean centrifuge tube.

11.3.9. Concentrate the extract to dryness under a gentle stream of nitrogen in a water bath held at 50 ± 5°C.

11.3.10. Add 1 mL of methanol to the extracts, including the blank and LCS aliquots.

11.3.11. Spike the extracts with the instrument internal standard and vortex the extract.

11.3.12. Filter the extract through a 0.2 µm nylon filter. Do not use PTFE filters.

11.3.13. Transfer each extract to an LC/MS/MS autosampler vial for analysis.

11.4. Sample Preparation - Non-routine Liquids/screens

11.4.1. Non-routine miscellaneous liquids of unknown concentration should be screened to help prevent cross-contamination from unexpected high levels of PFCs. Dilute 10 µl of unknown liquid with 10 µl internal standard solution, 10 µl surrogate solution, and 970 µl methanol and analyze against a single point calibration using a mid-range calibration standard. If the sample concentration of any reported compound is determined to be 10 ppb or higher, pre-dilute the sample prior to preparation so that the sample concentration falls in the middle of the calibration range.

11.5. Document all sample preparation steps using the current OLC bench sheets and "additional sample preparation" forms located on R:\OLC\benchsheets. This includes the matrix, amount extracted, final volume, and any additional sample description necessary. Record the applicable start/stop times, lot numbers of reagents, cartridges, filters, etc., the analyst, and dates. Refer to the appropriate (based on matrix) bench sheet for all documentation items. These items document that the steps listed above were completed. Include comments for any additional steps taken during the preparation. The bench sheet is included with the analytical data.

11.6. HPLC/MS/MS Analysis

11.6.1. ESI negative analysis: Establish the operating parameters on the instrument by loading the appropriate method into the Analyst software. The recommended chromatographic conditions are shown below:

Water Analysis:

Time (mins)	5mM Ammonium Acetate in Methanol	5mM Ammonium Acetate in H2O	Flow Rate (ml/min)
0	20%	80%	1.0
1	20%	80%	1.0
10	90%	10%	1.0
13	90%	10%	1.0
13.5	20%	80%	1.0
16.5	20%	80%	1.0

Analytical Column: Kinetix EVO C18, 100 x 4.6
Column Temperature: 65°C
Injection Volume: 10 µL

Soil and Tissue Analysis:

Time (mins)	5mM Ammonium Acetate in Methanol	5mM Ammonium Acetate in H2O	Flow Rate (ml/min)
0	40%	60%	1.0
1	40%	60%	1.0
10	85%	15%	1.0
13	85%	15%	1.0
13.5	40%	60%	1.0
16.5	40%	60%	1.0

Analytical Column: Kinetix XB-C18, 100 x 4.6
Column Temperature: 65°C
Injection Volume: 5 µL

11.6.2. The autosampler is programmed to wash the needle with methanol after ever injection to minimize carryover.

11.6.3. Calibration

NOTE: Refer to *Calibration of Instruments for Organics Chromatographic Analyses* (SOC_CAL). The calibration procedure(s) and options chosen must follow the ALS protocols. In general, the calibration procedure is as follows:

11.6.3.1. Calibrate the system immediately prior to conducting any analyses. Starting with the standard of lowest concentration, analyze each calibration standard and tabulate the area of the product ion against concentration for each

compound. Calculate response factors (RFs) for each compound relative to the internal standard as follows:

$$RF = (AxCis)/(AisCx)$$

where: Ax = Area of the product ion for compound being measured.
Ais = Area of the product ion for the internal standard.
Cis = Concentration of the internal standard (ng/µL).
Cx = Concentration of the compound being measured (ng/µL).

11.6.3.2.The average response factor (RFa) is then calculated. The Relative Standard Deviation (RSD) must be less than 20% when average response factor is used. Alternatively, a statistically valid linear or logarithmic regression curve, with or without weighting may be used provided it meets the following criteria. The r^2 term must be >0.99. The response produced by each standard used in the calibration must be compared with its expected value and meet the following criteria. Each calibration point, except those less than 2x the MRL, should calculate to be 80-120% of its true value. Points less than 2x the MRL must calculate to be 50-150% of its true value.

11.6.3.3.Following initial calibration, analyze an ICV standard. The ICV solution must contain all analytes in the calibration standards. Calculate the concentration using the typical procedure used for quantitation. Calculate the percent difference (%D) from the ICV true value. The value determined from the second source should be within 30% of the expected concentration.

Note: The calibration sequences are typically continued with the analysis of samples and related QC. In this case, the ICV serves as the beginning CCV for the sequence.

11.6.4. Continuing Calibration Verification

11.6.4.1.The working calibration curve or calibration factor must be verified on each analytical sequence by the analysis of one or more mid-range calibration standards (CCV). A mid-level standard (CCV) must be injected at the start of each sequence and then every 12 hours thereafter.

11.6.4.2.The water and soil matrix acceptance criteria for all analytes in the CCV analysis are a response (RF or concentration) within ± 30% D of the expected value, as compared to the initial calibration. The CCV criteria for tissue ±50% for surrogates and ±30% for all other analytes. Refer to the ALS protocols for organics analyses calibration for CCV evaluation protocols.

11.6.5. Internal Standard Criteria

11.6.5.1.The internal standard responses and retention times must be evaluated immediately after or during data acquisition. If the retention time for any internal standard changes by more than 60 seconds from that in the most recent CCV standard, the chromatographic system must be inspected for malfunctions and corrective action identified, as required. If the product ion area for any of the internal standards changes by a factor of two (50% to 200%) from that in the most recent CCV standard, the chromatographic system must be inspected for malfunctions and corrective action identified,

as appropriate. When corrective action is taken, reanalysis of samples analyzed while the system was malfunctioning is required.

Note: The IS criterion for tissue matrix is 30-200% from the most recent CCV.

11.6.6. Sample Analysis

11.6.6.1. Analyze the samples using the chromatographic conditions determined for the acquisition method in SRM mode. SRM mode allows only one parent ion (generally the [M+H]+ ion in positive mode and the [M-H]- ion in negative mode) through the first quadrapole. In the collision cell (Q2) the parent ion is fragmented. In the third quadrapole (Q3) all ions except the quantitation fragment (product ion) are filtered out. The only ions that are allowed through the instrument are ions that have the same parent mass producing the same product mass during a particular segment of analysis time. This analysis segment is specified for a particular retention time range that corresponds to the retention time of a certified standard. The specific parent, fragment and product ions monitored during this analysis are specified in Table 3.

11.6.6.2. Evaluate the sample data and chromatograms. Determine if the analysis was acceptable from a chromatographic standpoint, based on typical responses, chromatographic resolution, baseline, and background.

11.6.6.3. Identify a sample component by comparison of its retention time to the retention time of the CCV standard chromatogram and retention time window. Identification of an analyte occurs when a product ion peak from a sample extract falls within the daily retention time window for the product ion peak of the certified standard.

12. QA/QC REQUIREMENTS

12.1. Initial Precision and Recovery Validation

The precision of the extraction procedure and the HPLC/MS/MS procedure must be validated before analysis of samples begins, or whenever significant changes to the procedures have been made. To do this, four liquid and solid matrix samples are spiked with the appropriate matrix spike solution, extracted and analyzed according to this SOP.

12.2. Method Detection Limits and Limit of Detection

12.2.1. A method detection limit (MDL) study must be undertaken before analysis of samples can begin. To establish detection limits that are precise and accurate, the analyst must perform the following procedure. Spike a minimum of seven blank matrix samples with the MDL spiking solution. Follow the extraction and analysis procedures in this SOP to analyze the samples.

12.2.2. Calculate the average concentration found (x) in ng/L, and the standard deviation of the concentrations (s) in ng/L for each analyte. Calculate the MDL for each analyte. Refer to *Performing Method Detection Limit Studies and Establishing Limits of Detection and Quantification* (CE-QA011). The MDL study is used to establish the

Limit of Detection (LOD). The LOD is equivalent to the MDL, unless otherwise defined by project or program (i.e. DOD QSM – see ADM-DOD SOPs). The LOD must be verified annually (or MDL repeated), and quarterly for DOD work (unless designated as being done per batch).

12.3. Limits of Quantification (LOQ)

12.3.1. The laboratory establish a LOQ for each analyte as the lowest reliable laboratory reporting concentration or in most cases the lowest point in the calibration curve which is less than or equal to the desired regulatory action levels, based on the stated project requirements. Analysis of a standard or extract prepared at the lowest point calibration standard provides confirmation of the established sensitivity of the method. The LOQ recoveries should be within 50% of the true values to verify the data reporting limit. Refer to *Performing Method Detection Limit Studies and Establishing Limits of detection and Quantification* (CE-QA011).

12.4. Ongoing QC Samples required are described in the ALS-Kelso Quality Assurance Manual and in the SOP for Sample Batches. Additional QC Samples may be required in project specific quality assurance plans (QAPP). For example projects managed under the DoD ELAP must follow requirements defined in the DoD Quality Systems Manual for Environmental Laboratories. General QA requirements for DoD QSM are defined in the laboratory SOP *Department of Defense Projects – Laboratory Practices and Project Management* (ADM-DOD and ADM-DOD5). The routine QC Samples are as follows:

12.4.1. Method Blank

A method blank is a sample of DI water or matrix sand extracted and analyzed with every batch of 20 (or fewer) samples to demonstrate that there are no method interferences. If the method blank shows any hits above the reporting limit, corrective action must be taken. Corrective action includes recalculation, reanalysis, system cleaning, or re-extraction and reanalysis.

12.4.2. Lab Control Sample (LCS)

12.4.2.1. The laboratory control sample is composed of analyte-free water or matrix sand into which is spiked all target analytes. The LCS is designed to monitor the extraction efficiency of the method, since it can be safely presumed that no matrix interferences are present in the sample as prepared. The concentration of the spike in the LCS matrix should be at 5 ng/L or at levels specified by a project analysis plan.

12.4.2.2. A lab control sample (LCS) must be extracted and analyzed with every batch of 20 (or fewer) samples. Calculate the LCS recovery as follows:

$$\%R = X/TV \times 100$$

Where X = Concentration of the analyte recovered
TV = True value of amount spiked

12.4.2.3. Default acceptance criteria are 70-130% for water, 50-150% for solids and tissue. Once sufficient data is generated, statistical limits will be generated.

If the LCS fails acceptance criteria, corrective action must be taken. Corrective action includes recalculation, reanalysis, or re-extraction and reanalysis.

12.4.3. Matrix Spike

12.4.3.1.A matrix spike (MS) and duplicate matrix spike (DMS) must be extracted and analyzed with every batch of 20 (or fewer) samples. The MS/DMS is prepared by adding a known volume of the matrix spike solution to the sample and determining the spiked sample concentration. Calculate percent recovery (%R) as:

$$\%R = \frac{X - X1}{TV} \times 100$$

Where X = Concentration of the analyte recovered
X1 = Concentration of unspiked analyte
TV = True value of amount spiked

Calculate Relative Percent Difference (RPD) as:

$$RPD = \frac{|R1 - R2|}{(R1 + R2)/2} \times 100$$

Where R1= Higher result
R2= Lower result

12.4.3.2.Default acceptance criteria are 70-130% for water, 50-150% for solids and tissue. Once sufficient data is generated, statistical limits will be generated. If the MS/DMS recovery is out of acceptance limits for reasons other than matrix effects, corrective action must be taken. Corrective action includes recalculation, reanalysis, or re-extraction and reanalysis.

12.4.4. Surrogate

12.4.4.1.The analyst should monitor the performance of the extraction and the analytical system as well as the effectiveness of the method in dealing with each sample matrix by spiking each sample, standard and reagent water blank with the appropriate surrogate mix. Surrogate spike is added to every sample, blank and spike prior to extraction. Calculate surrogate percent recovery (%R) as:

$$\%R = S/V \times 100$$

Where S = The amount of surrogate recovered
V = The amount spiked

12.4.4.2. Default acceptance criteria are 70-130% for water, 50-150% for solids and tissue. Once sufficient data is generated, statistical limits will be generated. If surrogate recoveries are outside of acceptance limits for reasons other than matrix effects, corrective action must be taken. Corrective action includes recalculation, reanalysis, or re-extraction and reanalysis.

12.5. Prior to preparation of stock solutions, acetonitrile, methanol, and water blanks should be run to determine possible interferences with analyte peaks. If the acetonitrile, methanol or water blanks show contamination, a different batch should be used.

12.6. Control charts should be maintained for results of LCS, surrogate, and matrix spike analyses. The charts should be reviewed periodically for trends in results. Control limits for QC analyses are determined using the control charts or similar mechanism on an annual basis.

13. DATA REDUCTION AND REPORTING

13.1. The LC/MS/MS data station uses the Analyst software to generate the raw data used to calculate the standards $\overline{RF_x}$ values, the sample amounts, and the spike results. When the $\overline{RF_x}$ is used, calculate the extract concentration as follows:

$$C_{ex} = \frac{(Resp_x)(Amt_{ISTD})}{(Resp_{ISTD})(\overline{RF_x})}$$

Where: C_{ex} = the concentration in the sample extract (ng/mL);

$Resp_x$ = the product ion peak area of the analytes of interest;

$Resp_{ISTD}$ = the product ion peak area of the associated internal standard;

Amt_{ISTD} = the amount, in ng/mL, of internal standard added

$\overline{RF_x}$ = the average response from the initial calibration.

13.2. The concentration of analytes in the original sample is computed using the following equations:

Aqueous Samples: $$Concentration\ (ng/L) = \frac{(Cex)(Vf)(D)}{(Vs)}$$

Where: C_{ex} = Concentration in extract in ng/mL

V_f = Final volume of extract in mL

D = Dilution factor

V_s = Volume of sample extracted, liters

Nonaqueous Samples: $$Concentration\,(ng/g) = \frac{(Cex)\,(Vf)\,(D)}{(W)}$$

Where C_{ex} = Concentration in extract in ng/mL
V_f = Final volume of extract in mL
D = Dilution factor
W = Weight of sample extracted in grams. The wet or dry weight may be used, depending upon the specific client requirements.

13.3. Sample concentrations are reported when all QC criteria for the analysis has been met. Reported results not meeting QC criteria must be qualified with a standard ALS footnote.

13.4. Data Review

Following primary data interpretation and calculations, all data is reviewed by a secondary analyst. Following generation of the report, the report is also reviewed. Refer to the SOP for *Laboratory Data Review Process* (ADM-DREV) for details. The person responsible for final review of the data report and/or data package should assess the overall validity and quality of the results and provide any appropriate comments and information to the Project Chemist to inclusion in the report narrative.

13.5. Reporting

13.5.1. Reports are generated in the ALS LIMS by compiling the SMO login, sample prep database, instrument date, and client-specified report requirements (when specified). This compilation is then transferred to a file which Excel© uses to generate a report. The forms generated may be ALS standard reports, DOD, or client-specific reports. The compiled data from LIMS is also used to create EDDs.

13.5.2. Procedures for applying data qualifiers are described in the SOP for Report Generation or in project-specific requirements.

14. CONTINGENCIES FOR HANDLING OUT-OF-CONTROL OR UNACCEPTABLE DATA

14.1. Refer to the SOP for *Non Conformance and Corrective Action* (CE-QA008) for procedures for corrective action. Personnel at all levels and positions in the laboratory are to be alert to identifying problems and nonconformities when errors, deficiencies, or out-of-control situations are detected.

14.2. Handling out-of-control or unacceptable data

14.2.1. On-the-spot corrective actions that are routinely made by analysts and result in acceptable analyses should be documented as normal operating procedures, and no specific documentation need be made other than notations in laboratory maintenance logbooks, run logs, for example.

14.2.2. Some examples when documentation of a nonconformity is required using a Nonconformity and Corrective Action Report (NCAR):

- Quality control results outside acceptance limits for accuracy and precision
- Method blanks or continuing calibration blanks (CCBs) with target analytes above acceptable levels
- Sample holding time missed due to laboratory error or operations
- Deviations from SOPs or project requirements
- Laboratory analysis errors impacting sample or QC results
- Miscellaneous laboratory errors (spilled sample, incorrect spiking, etc)
- Sample preservation or handling discrepancies due to laboratory or operations error

15. METHOD PERFORMANCE

15.1. This method was validated through single laboratory studies of accuracy and precision. Refer to the reference method for additional method performance data available.

15.2. The method detection limit (MDL) is established using the procedure described in *Performing Method Detection Limit Studies and Establishing Limits of Detection and Quantification* (CE-QA011). Method Reporting Limits are established for this method based on the low calibration point and the MDL study results.

16. POLLUTION PREVENTION AND WASTE MANAGEMENT

16.1. It is the laboratory's practice to minimize the amount of solvents, acids and reagent used to perform this method wherever feasible. Standards are prepared in volumes consistent with methodology and only the amount needed for routine laboratory use is kept on site. The threat to the environment from solvent and reagents used in this method can be minimized when recycled or disposed of properly.

16.2. The laboratory will comply with all Federal, State and local regulations governing waste management, particularly the hazardous waste identification rules and land disposal restrictions as specified in the ALS EH&S Manual.

16.3. This method uses non-halogenated solvents. Waste solvents generated through the lab ware cleaning, sample prep, and LC mobile phase usage are collected in containers near the point of creation. They are then stored at a satellite storage center in the OLC lab which is transferred weekly to the main facility waste management area. The waste solvent will then be added to the hazardous waste storage area and disposed of in accordance with Federal and State regulations.

17. TRAINING

17.1. Review literature (see references, section 19). Review this SOP. Also review the applicable MSDS for all reagents and standards used. Following these reviews, observe the procedure as performed by an experienced analyst.

17.2. The next training step is to assist in the procedure under the guidance of an experienced analyst. During this period, the analyst is expected to transition from a role of assisting, to performing the procedure with minimal oversight from an experienced analyst.

17.3. Perform initial precision and recovery (IPR) study as described above for each matrix. Summaries of the IDOC are reviewed and signed by the department's Technical Manager.

Copies of the IDOC and Training Plan are forwarded to QA for record keeping. For applicable tests, IPR studies are performed in order to be equivalent to NELAC's Initial Demonstration of Capability.

17.4. Training is documented following the SOP *ALS-Kelso Training Procedure* (ADM-TRAIN).

18. Method Modifications

18.1. This section is not applicable because this procedure is a laboratory developed method.

19. REFERENCES

19.1. E. Sinclair, K. Kannan. (2006). Mass loading and fate of perfluoroalkyl surfactants in wastewater treatment plants. Environ. Sci. Technol. Mar 1;40 (5):1408-14

19.2. Kuklenyik Z, Reich JA, Tully JS, Needham LL, Calafat AM. (2004). Automated solid-phase extraction and measurement of perfluorinated organic acids and amides in human serum and milk. Environmental science & technology (0013-936X), 38 (13), p. 3698.

19.3. Hansen, K.J., et al. 2002. Quantitative characterization of trace levels of PFOS and PFOA in the Tennessee river. Environmental Science and Technology (36):1681-1685.

19.4. SW-846, Chapter One, Revision 1, July 1992.

19.5. Related Documents – These documents are used in the laboratory to support this procedure and are reviewed at the same time this SOP is reviewed each year.

R:\OLC\benchsheets\Additional prep information for PFC's in water.doc
R:\OLC\benchsheets\Additional prep information for PFC's in solids.doc

20. CHANGES SINCE THE LAST REVISION

20.1. Minor miscellaneous format revisions and typographical corrections
20.2. Section 7.1 - Added 3 additional reagents.
20.3. Section 7.2.3.1 – revised calibration levels.
20.4. Section 8.1 – Changed analytical column used.
20.5. Section 8 – Added Strata XL-AW 100 µm Weak anion exchange tube.
20.6. Section 11.4 – New section addressing unknown/high level liquids.
20.7. Section 11.6.1 – Revised chromatographic conditions.
20.8. Tables 1,2 & 3 – Addition of numerous analytes
20.9. Table 1 – Added to list of analyte acronyms. Minor revisions to existing acronyms.
20.10. Table 3 – Split into Table 3a and 3b. Table 3a gives quantitative ion transitions. Table 3b gives monitored qualitative ion transitions.
20.11. Table 3 – Updated transitions and collision energies. Several corrections to existing analytes made.
20.12. Multiple sections required division between water and soil/tissue analysis schemes.

TABLE 1
Analyte Acronyms

PFBA	Perfluorobutanoic acid
PFPeA	Perfluoropentanoic acid
PFHxA	Perfluorohexanoic acid
PFHpA	Perfluoroheptanoic acid
PFOA	Perfluorooctanoic acid
PFNA	Perfluorononanoic acid
PFDA	Perfluorodecanoic acid
PFUnA	Perfluoroundecanoic acid
PFDoA	Perfluorododecanoic acid
PFBS	Perfluorobutane sulfonate
PFHxS	Perfluorohexane sulfonate
PFHpS	Perfluoroheptane sulfonate
PFOS	Perfluorooctane sulfonate
PFDS	Perfluorodecane sulfonate
FOSA	Perfluorooctanesulfonamide
N-MeFOSA	Methylperfluoro-1-octanesulfonamide
N-EtFOSA	Ethylperfluoro-1-octanesulfonamide
PFTrDA	Perfluoro-n-tridecanoic Acid
PFTeDA	Perfluorotetradecanoic Acid
N-MeFOSE	2-(N-methylperfluoro-a-octanesulfonamido)-ethanol
N-EtFOSE	2-(N-ethylperfluoro-1-octanesulfonamido)-ethanol
6:2 FTS	Sodium 1H,1H,2H,2H-perfluorooctane sulfonate
8:2 FTS	Sodium 1H,1H,2H,2H-perfluorodecane sulfonate

TABLE 2
TARGET COMPOUNDS and MRLs

Analyte	Method Reporting Limit		
	Water	Soil	Tissue
	ng/L	µg/kg	µg/kg
Perfluoropentanoic acid	5.0	1.0	2.0
Perfluorohexanoic acid	5.0	1.0	0.25
Perfluoroheptanoic acid	5.0	1.0	0.25
Perfluorooctanoic acid	5.0	1.0	0.25
Perfluorononanoic acid	5.0	1.0	0.25
Perfluorodecanoic acid	5.0	1.0	0.25
Perfluoroundecanoic acid	5.0	1.0	0.25
Perfluorododecanoic acid	5.0	1.0	0.25
Perfluorobutane sulfonate	5.0	1.0	0.25
Perfluorohexane sulfonate	5.0	1.0	0.25
Perfluorooctane sulfonate	5.0	1.0	0.25
Perfluorodecane sulfonate	5.0	1.0	0.50
Perfluorooctanesulfonamide	5.0		0.50
Perfluoro-n-tridecanoic acid	5.0		0.25
Perfluorobutanoic acid	10		
Perfluoroheptane sulfonate	5.0		
Methylperfluoro-1-octanesulfonamide	5.0		
Ethylperfluoro-1-octanesulfonamide	5.0		
Perfluorotetradecanoic Acid	5.0		
2-(N-methylperfluoro-1-octanesulfonamido)-ethanol	5.0		
2-(N-ethylperfluoro-1-octanesulfonamido)-ethanol	5.0		
Sodium 1H,1H,2H,2H-perfluorooctane sulfonate	5.0		
Sodium 1H,1H,2H,2H-perfluorodecane sulfonate	5.0		

TABLE 3a
Target Compound Ions (Quantitative)

Analytes	Parent Ion (m/z)	Product Ion (m/z)	Collision energy (v)
PFPeA	263	219	-14
PFHxA	313	269	-12
PFHpA	363	319	-16
PFOA	413	169	-26
PFNA	463	419	-14
PFDA	513	469	-16
PFUnA	563	519	-16
PFDoA	613	569	-18
PFBA	213	169	-14
PFBS	299	80	-58
PFHxS	399	80	-78
PFOS	499	80	-106
PFDS	599	80	-106
FOSA	498	78	-38
PFTrDA	663	619	-20
PFTeDA	713	669	-22
PFHpS	449.4	80	-78
N-MeFOSE	616.2	58.8	-60
N-MeFOSA	512.2	169.3	-36
N-EtFOSE	630.2	59	-60
N-EtFOSA	526.2	169	-40
6:2-FTS	427	407	-37
8:2-FTS	527.2	507.1	-35
^{13}C-PFOA	417	372	-14
^{13}C-PFOS	503	80	-106
^{13}C-PFDA	515	470	-16
^{13}C-PFHxA	315	270	-12
^{13}C-PFNA	468	423	-14
^{13}C-PFUnA	565	520	-26
^{13}C-PFDoA	615	570	-38
d_3_N_MeFOSA	515	169	-38
^{18}O-PFHS	403	103	-56
^{13}C-6:2-FTS	429.5	409	-37
d_9-N-EtFOSA	531	169	-40
d_7-N-MeFOSA	623	59	-60
d_9-EtFOSE	639	59	-60

TABLE 3b
Target Compound Ions (Qualitative)

Analytes	Parent Ion (m/z)	Product Ion (m/z)	Collision energy (v)
PFHxA	313	119	-28
PFHpA	363	169	-24
PFOA	413	369	-14
PFNA	463	219	-26
PFDA	513	269	-22
PFUnA	563	269	-26
PFDoA	613	169	-38
PFBS	299	99	-42
PFHxS	399	99	-56
PFOS	499	99	-80
PFDS	599	99	-80
FOSA	498	169	-38
PFTrDA	663	169	-35
PFTeDA	713	369	-30
PFTeDA	713	419	-30
PFHpS	449.4	99	-60
N-MeFOSE	556.2	122	-50
N-MeFOSA	512.2	219.1	-36
N-EtFOSE	570.2	136	-50
N-EtFOSA	526.2	219	-37
6:2-FTS	427	81	-60
8:2-FTS	527.2	487.1	-42

TABLE 4

Summary of Corrective Actions				
Method Reference	Control	Specification and Frequency	Acceptance Criteria	Corrective Action
LCP-PFC	ICAL	Prior to sample analysis	% RSD ≤ 20 R ≥ 0.995 COD ≥ 0.990	Correct problem then repeat ICAL
LCP-PFC	ICV	After ICAL	± 30% Diff, except ± 50% for tissue surrogates	Correct problem and verify second source standard; rerun second source verification. If fails, correct problem and repeat initial calibration.
LCP-PFC	CCV	Prior to sample analysis	± 30% Diff, except ± 50% for tissue surrogates	Correct problem then repeat CCV or repeat ICAL
LCP-PFC	Method Blank	Include with each analysis batch (up to 20 samples)	<MRL	If target exceeds MRL, reanalyze to determine if instrument was cause. If still noncompliant then: Re-extract or reanalyze samples containing contaminate, unless samples contain > 20x amount in blank.
LCP-PFC	Laboratory Control Sample	Include with each analysis batch (up to 20 samples)	See DQO Table	If exceeds limits, re-extract and re-analyze
LCP-PFC	Matrix Spike	Include with each analysis batch (up to 20 samples)	See DQO Table	Evaluate data to determine if the there is a matrix effect or analytical error
LCP-PFC	Sample Duplicates	Include with each analysis batch (up to 20 samples)	W: RPD ≤ 30 S: RPD ≤ 50	Re-homogenize and re-analyze if result is > 5 X the MRL

ALS Environmental

DOCUMENT TITLE:	SPECIFIC CONDUCTANCE µMHOS AT 25 °C
SOP ID:	04 SPC
REVISION NUMBER:	10
REVISION DATE:	09/21/2015
INSTITUTED DATE:	10/ 2/2015
DOC. CONTROL#:	----------
ARCHIVAL DATE:	

SOP Title: Specific Conductance, µmhos at 25 °C

SOP ID: 04-SPC Revision #: 10

Approved By: _____ Date: 9/23/15
Validator- Matthew Wolf

Approved By: _____ Date: 9/23/15
Wet Chemistry Supervisor- Chad Firment

Approved By: _____ Date: 10/2/15
Quality Assurance Manager- Anna Milliken

Annual Review:

Reviewed By: _____ Date: _____

Reviewed By: _____ Date: _____

Reviewed By: _____ Date: _____

Reviewed By: _____ Date: _____

Reviewed By: _____ Date: _____

Reviewed By: _____ Date: _____

TABLE OF CONTENTS

1 Scope and Application 4
2 Summary of Method 4
3 Interferences 4
4 Safety 4
5 Apparatus and Materials 5
6 Reagents 5
7 Instrument Calibration 7
8 Quality Control 7
9 Sample Collection, Preservation and Handling 9
10 Procedure 10
11 Calculations 10
12 Reporting Results 11
13 Waste Disposal 12
14 Pollution Prevention 12
15 Definitions 12
16 Maintenance and Troubleshooting 12
Appendix A 13
Appendix B 14
Summary of Changes 15

1 Scope and Application

1.1 This procedure is for the for determination of specific conductance in drinking, surface, and saline waters, domestic and industrial wastes and acid rain (atmospheric deposition).

1.2 This procedure is adapted from EPA Method 120.1 1982, "Conductance (Specific Conductance, µmhos at 25 °C)," SW-846 Method 9050A revision 1 December 1996, and Standard Methods 2510B 1997 "Conductivity-Laboratory Method."

1.3 This document states the laboratory's policies and procedures established in order to meet the requirements of all certifications/accreditations currently held by the laboratory, including the most current standards in effect for the National Environmental Laboratory Accreditation Program (NELAP).

1.4 Individual project requirements may override criteria listed in this SOP.

2 Summary of Method

2.1 The specific conductance of a sample is measured by a self-contained conductivity meter, Wheatstone bridge-type or equivalent. The samples are preferably analyzed at 25 °C. If not, temperature corrections are made and the results are reported at 25 °C.

3 Interferences

3.1 Temperature - Conductivity (electrolytic) increases with temperature at a rate of approximately 1.0% per °C. Significant errors can result from inaccurate temperature measurement. This interference is eliminated through use of an automatic temperature compensator (ATC) built into both systems used to determine conductivity. An ATC works by automatically displaying the conductivity of a sample corrected to a temperature of 25 °C.

3.2 Contaminants and evaporation - Conductivity standards pick up contaminants from the air in a very short time. Both contamination and evaporation can be minimized by using a narrow-necked container for all measurements. Keep the cap on the bottle as much as possible. Do not return any used sample or standard to its bottle.

4 Safety

4.1 ALS-Middletown maintains Safety Data Sheets (SDSs) on all chemicals used in this procedure. ALS-Middletown recommends that all individuals performing this SOP familiarize themselves with the SDSs associated with the procedure prior to SOP performance. SDSs are available to all staff and are located in hard copy in the QA reference library and electronically on the ALS-Middletown server in the Common>Health & Safety>SDS folder.

4.2 All possible steps shall be taken to limit the analyst contact with chemicals and samples. The minimum personal protective equipment (PPE) requirements are appropriate chemical resistant gloves, safety glasses and a fully buttoned lab coat. This PPE shall reduce the possibility of contact to a safe level, but the analyst shall not limit themselves to these PPE minimums. Refer to SOP 90-PPE for detailed PPE information.

4.3 Injuries from glass cuts are a serious concern in the laboratory. Several types of cut-resistant gloves are available in all the laboratory work areas. Wells Lamont part# Y1700 or equivalent should be worn as an under glove to provide cut protection when nitrile, latex or vinyl gloves are worn for chemical protection. The use of cut-resistant gloves is mandatory throughout the entire laboratory when handling glass sample containers and reusable labware constructed of glass. The handling of VOA and extract vials does not require cut-resistant gloves unless a cut hazard is evident. For example, loading capped vials unto an instrument does not require the use of cut-resistant gloves, but capping extract vials does.

4.4 In addition to the PPE minimums required above, a face shield shall be worn at all times while dispensing, diluting or handling any quantity of concentrated acid.

4.5 Analysts should always exercise caution when handling samples since the chemical and biological composition of the samples is unknown.

4.6 The health hazards of each substance used in this method may not have been fully established. Each substance shall be regarded as a potential health hazard and exposure shall be as low as reasonably achievable.

5 Apparatus and Materials

5.1 VWR sympHony meter model number SB80PC, equipped with a 1.0 cm conductivity cell- VWR catalog #11388-372, or equivalent.

5.2 Man-tech Industries Autotitrator system - the system includes PC Titrate V3 software, and a conductivity meter model 4510 (equipped with a 1.0 cm conductivity cell), Man-tech Industries product #PCE-96-CT1300, or equivalent.

5.3 Volumetric Flasks, Class A, various sizes- VWR, or equivalent.

5.4 Pipets, Class A, various sizes- VWR, or equivalent.

5.5 50 mL centrifuge tubes with screw caps –VWR # 21008-177, or equivalent.

5.6 Computer software- PC Titrate, V3; Horizon LIMS, version 11, or equivalent.

5.7 Computer hardware- Dell Dimension 8800, or equivalent.

6 Reagents

NOTE: Unless otherwise noted in this section all chemicals are stored at room temperature and labeled with an expiration date of five years from receipt. Manufacturer's labeled expiration dates, when provided, take precedent over all other expiration dates.

6.1 Reagent water - ALS-MIDDLETOWN uses a Filson Water Purification System which provides analyte-free, greater than 16.0 megohm-cm DI water on demand.

6.2 Potassium Chloride (KCl) - purchased from VWR catalog #JT3040-1 or equivalent. Dry for 2 hours at 104 ºC and store in the desiccator. Dried KCl can be stored for up to 90 days before re-drying is necessary.

6.2.1 1413 µmhos/cm Standard KCl Solution (0.01 M) - In a 1-L volumetric flask partially filled with DI water, dissolve 0.7456 g of anhydrous KCl. Dilute to 1 L at 25 ˚C. This is the standard reference solution that has a conductivity of 1413 µmhos/cm at 25 ˚C. Store in amber glass and label with an expiration date of 180 days from preparation.

6.2.2 10,000 µmhos/cm standard KCl solution – In a 1-L volumetric flask partially filled with reagent water, dissolve 5.86 g of anhydrous KCl. Dilute to 1 L at 25 ˚C. This is the standard reference solution that has a conductivity of 10,000 µmhos/cm at 25 ˚C. Store in amber glass and label with an expiration date of 180 days from preparation.

6.2.3 100,000 µmhos/cm standard KCl solution - In a 500-mL volumetric flask partially filled with reagent water, dissolve 34.77 g of anhydrous KCl. Dilute to 1 L at 25 ˚C. This is the standard reference solution that has a conductivity of 100,000 µmhos/cm at 25 ˚C. Store in amber glass and label with an expiration date of 180 days from preparation.

6.2.4 100 µmhos/cm standard- In a 100-mL volumetric flask partially filled with reagent water, pipette 1 mL of 10,000 µmhos/cm standard KCl solution (6.2.2). Bring to volume with reagent water at 25 ˚C. This is a solution that has a conductivity of 100 µmhos/cm at 25 ˚C for use in the Linear Calibration Study. Store in amber glass and label with an expiration date of 180 days from preparation.

6.2.5 10 µmhos/cm standard KCl solution- In a 100-mL volumetric flask partially filled with reagent water, pipette 10 mL of 100 µmhos/cm standard KCl solution (6.2.4). Bring to volume with reagent water at 25 ˚C. This is a solution that has a conductivity of 10 µmhos/cm at 25 ˚C for use in the Linear Calibration Study. Store in amber glass and label with an expiration date of 180 days from preparation.

6.3 Isopropyl Alcohol - Baxter catalog #323-4 DK, or equivalent.

6.4 Ethyl Ether - Burdick and Jackson catalog #107-4 or equivalent.

6.5 Hydrochloric Acid (HCl) - VWR catalog #JT9535-33, or equivalent.

6.6 Cleaning solution - This is a solution containing 100 mL isopropyl alcohol, 100 mL ethyl ether, 50 mL concentrated HCl and 50 mL DI water. The conductivity cell shall be cleaned once a month or more if necessary. Document the cleaning in the conductivity maintenance logbook. Store in amber glass and label with an expiration date of 180 days from preparation.

7 Instrument Calibration

7.1 Calibration for VWR sympHony meter

7.1.1 Prepare a 0.01 M KCl solution (section 6.2.1) using a source of KCl with a lot number that differs from that which is used to make the conductivity standards used for daily verification.

7.1.2 Immerse the conductivity cell into an aliquot of this solution, and allow the reading to stabilize.

7.1.3 Press the "calibration" button on the meter, and use the up and down arrows to adjust the displayed reading to 1413 µmhos/cm. Press the "read" button to return the meter to normal reading mode.

7.1.4 Verify this calibration by measuring each of the conductivity standards, recording the results in the conductivity logbook. Each standard shall read within 10% of its expected value, or recalibration is necessary.

7.2 Calibration of Man-tech Autotitrator

7.2.1 Prepare a schedule for the Autotitrator as described in the procedure of SOP 04-pHW. The schedule shall include a 0.01M KCl solution as described in section 7.1.1 using the analysis schedule "Cond cal 1413", followed by the 1413, 10,000 and 100,000 µmhos/cm conductivity standards using the analysis schedule "Cond only."

7.2.2 Pour aliquots of each standard used in the schedule corresponding with the vial numbers that appear on the schedule and click the "start" button.

7.2.3 During the analysis, the operator will the prompted at the proper time by the software with onscreen prompts that will complete the calibration process.

7.2.4 The verification standards must recover with 10% of their expected values in order for the calibration to be acceptable. Make a record of this calibration in the Autotitrator maintenance logbook.

7.3 Calibrations for either instrument shall be performed yearly, when its conductivity cell is replaced, or when daily verification standards no longer pass.

8 Quality Control

8.1 All policies and procedures in the most current revision of the ALS-MIDDLETOWN QA Manual shall be followed when performing this procedure.

8.2 MDL studies must be performed at least annually or more frequently if required by the analytical method. Special projects may also require MDL studies to be performed at more frequent intervals. See SOP 99-MDL.

8.3 Initial Demonstration of Capability/Ongoing Proficiency

8.3.1 Prepare and analyze four replicate of the 1413 µmhos/cm standards. These results must be within 10% of the actual value. If the analyst fails to produce acceptable results, retraining and reanalysis must be performed. Ongoing proficiency must be established annually as specified in the QA Plan, Technical Training.

8.4 **Quality Control Requirements**
(Specific project requirements may override these requirements.)

Parameter	Concentration	Frequency	Control Limits	Corrective Action
Distilled Blank	---	Beginning of Batch	< 1.0 µmhos/cm < Reporting Limit. For DoD samples < ½ Reporting Limit RL = 0.500 µmhos/cm	Reanalyze all associated samples since the last acceptable blank. If reanalysis is not possible, data shall be reported with a qualifying comment.
DI Blank	---	Beginning and end of batch	< 1.0 µmhos/cm < Reporting Limit. For DoD samples < ½ Reporting Limit RL = 0.500 µmhos/cm	Reanalyze all associated samples. If samples cannot be reanalyzed, report with a qualifying statement.
1413 Standard	1413 µmhos/cm	Beginning and end of batch	90 - 110%	Reanalyze all associated samples. If samples cannot be reanalyzed report with a qualifying statement.
10,000 Standard	10,000 µmhos/cm	Beginning of batch	90 - 110%	Reanalyze all associated samples. If samples cannot be reanalyzed report with a qualifying statement.
100,000 Standard	100,000 µmhos/cm	Beginning of batch	90 - 110%	Reanalyze all associated samples. If samples cannot be reanalyzed report with a qualifying statement.

Parameter	Concentration	Frequency	Control Limits	Corrective Action
Duplicate	---	One every 10 samples. Minimum of one per batch.	RPD " 10%	If all of the method performance criteria are acceptable, the precision problem is judged to be matrix related. Report with a qualifying statement.

8.5 Samples selected for duplicate and spike analysis shall be rotated among client samples so that various matrix problems may be noted and/or addressed. Poor performance in a duplicate or spike analysis may indicate a problem with the sample composition and shall be reported to the client whose sample produced the poor recovery.

8.6 The conductance meter shall be checked daily or prior to each use by the analysis of the 1413 µmhos/cm, 10,000 µmhos/cm, and 100,000 µmhos/cm standards. Results must be within 10% of the true values. If this value is exceeded, remake the standards. If failure continues, clean the conductance cell using the cleaning solution.

8.7 Records shall be kept in the appropriate logbook to show the calibration of the conductance meters, see Section 7.

8.8 Linear Calibration Range Verification (LCR Study)

8.8.1 A Linear Calibration Range (LCR) must be determined initially and verified annually or whenever a significant change in instrument response is observed or expected. The initial demonstration of linearity must use sufficient standards to insure that the resulting curve is linear. The verification of linearity must use a minimum of a blank and five standards. If any verification data exceeds the initial values by ±10%, linearity must be reestablished. If any portion of the range is shown to be nonlinear, sufficient standards must be used to clearly define the nonlinear portion.

8.8.2 Example

Standard	True Value, µmhos/cm
1	10
2	100
3	1413
4	10,000
5	100,000

9 Sample Collection, Preservation and Handling

9.1 Refer to SOP 20-FSSP for Sample Collection.

9.2 Plastic or glass bottles are acceptable. A minimum of 50 mL is required for analysis.

9.3 No chemical preservation is required after sample collection. Sample shall be stored above the freezing point of water up to 6 °C.

9.4 The holding time for conductance is 28 days.

10 Procedure

10.1 Specific conductance readings are temperature compensated by the meter. However, it is preferable to have the samples as close to 25 ºC as possible. If sample conductivity is measured without internal temperature compensation, calculate conductivity using formula under section 11.4 below.

10.2 Shake sample well.

10.3 Immerse the temperature probe and conductivity cell into the sample. Make sure they do not touch the sides or bottom of the container and the cell chamber is free of trapped air.

10.4 Allow the readings to stabilize and record the values in lab book (see Appendix A).

10.5 Alternatively, the Man-tech Autotitrator may be used to analyze conductance. Refer to SOP 04-pHW for setup instructions. Analysis conducted with this instrumentation is restricted to analysts familiar with its operation.

10.5.1 When analyzed in this fashion, conductivity is typically analyzed in conjunction with pH, and/or alkalinity. The schedule templates "cond pH alkalinity full tray," "cond pH," "cond pH High alk," and "cond only" will produce an analysis schedule that contains all necessary quality control standards and duplicate analyses NOTE: in order to differentiate individual samples run for low-range alkalinity or high-range alkalinity, the instrument will not analyze high-range alkalinity simultaneously with conductivity.

11 Calculations

11.1 Standard Recovery:

$$\% R = \frac{C_m}{C_n} \times 100$$

Where: C_m = measured concentration of standard
C_n = spiking concentration

11.2 Precision (RPD):

$$\% RPD = \frac{|(R_1 - R_2)|}{[(R_1 + R_2 \div 2]} \times 100$$

Where: R_1 = sample or spike result
R_2 = duplicate or spike duplicate result

11.3 Conductivity calculation for samples without internal temperature compensation at 25 ° C.

$$k, \mu mhos/cm = \frac{(k_m)}{1 + 0.0191\,(t-25)}$$

Where: k_m = measured conductivity in units of µmhos/cm at t ° C
t = temperature of measurement

12 Reporting Results

12.1 All raw data used for reporting results must be dated and initialed by the qualified laboratory personnel performing first and second review.

12.2 When entering data into Horizon LIMS do not round off results: Horizon will automatically perform rounding appropriate to the method. Horizon LIMS results are reported to three significant figures but limited to the number of decimal places in the reporting limit for the individual compound or analyte.

12.3 Report the actual results, even if it less than the reporting limit. Any sample with a result of less than the reporting limit is reported as ND (non-detectable); LIMS will automatically report the appropriate detection limit.

12.4 Report results as µmhos/cm at 25 °C. Results may also be reported as µSiemens/cm. One µSiemens is equal to one µmho.

12.5 When autoposting results from the autotitrator do the following:

12.5.1 Open the PC Titrate program, select “Reporting and Print a Report”.

12.5.2 From the list of report formats, choose “Water Analysis Historical Data”.

12.5.3 Print to the Screen.

12.5.4 Select the “define parameters” tab, go to the first column “run number” and double click on the cell with a number entered.

12.5.5 In the menu that opens up, select the space that has the number filled in and replace it with the run number of the report that was printed from the prior analysis, and click OK.

12.5.6 Select the “Preview Report” tab, confirm that the report you want appears on the screen.

12.5.7 Go to "file" and "export".

12.5.8 Change the file type to ASCII delimited file and then click the "..." by file name.

12.5.9 Type in the batch/order number of the report and click open.

12.5.10 Click "OK" and a screen should appear saying *****.txt was successfully created.

12.5.11 Exit out of this program and open the titrator data upload program.

12.5.12 Type in the initials of the analyst and select the file created in section 12.5.10.

12.5.13 Click process file.

12.5.14 Once that has completed, proceed to Horizon LIMS and use the autopost function.

13 Waste Disposal

13.1 Refer to SOP 19-Waste Disposal.

14 Pollution Prevention

14.1 Pollutions prevention encompasses any technique that reduces or eliminates the quantity or toxicity of waste at the point of generation. Numerous opportunities for pollution prevention exist in laboratory operation. Management shall consider prevention a high priority. Extended storage of unused chemicals increases the risk of accidents. The laboratory shall consider smaller quantity purchases which will result in fewer unused chemicals being stored and reduce the potential for exposure by employees. ALS-MIDDLETOWN tracks chemicals when received by recording their receipt in a traceable logbook. Each chemical is then labeled according to required procedures and stored in assigned locations for proper laboratory use.

15 Definitions

15.1 Refer to ALS-MIDDLETOWN QA Plan for general definitions.

16 Maintenance and Troubleshooting

16.1 Refer to maintenance logs and instrument manuals for guidance regarding general maintenance and troubleshooting specific problems related to the instrumentation being used in this method.

Appendix A

Specific Conductance	Date: ______ Time: ______ Analyst: ______ Reviewed By/Date: ______ Approved By/Date: ______

Sample Number	Spec. Cond. umhos/cm	Temp. Degrees C	Comments	Quality Control % Recovery or %RPD

REV:6/99

Page ________

Appendix B

Autotitrator Analytical Checklist

	Initials	Date
Analyst		
Schedule Rev		
1st Review		
2nd Review		
Approval		

Batch Numbers	

Standards/Reagents	
4 Buffer	
7 Buffer	
10 Buffer	
1413 Std	
10K Std	
100K Std	
50 Std	
200 Std	
0.02N H_2SO_4	
0.10N H_2SO_4	

Analyst/Schedule Reviewer Checklist	Analyst	Reviewer
All samples run, including those not entered by Sample Receiving		
All samples run within their hold time		
All samples run for the appropriate analysis (pH / SpC / Alk)		
Calibration Passes		
All openning QC passes (especially pH)		
If openning QC fails, was it put back on? If not why?		

Entry/ Approval Checklist	1st Review	2nd Review
All QC Criteria was calculated and checked (for all analyses)		
pH standards within 0.05 pH units		
SpC standards within 10%		
Alkalinity standards within 10%		
pH duplicates within 0.1 pH units		
SpC duplicates within 10%		
Alkalinity duplicates within 20%		
If QC failed were samples rerun within hold time? If not why?		
All samples run within hold time? If not appropriate comment entered in LIMS		
All samples comply with sample identification / correlated data /historical data. (2nd Review only)		

Comments:

Rev 11/09 Autotitrator Analytical Checklist Template Val 0089

Summary of Changes

Revision 0

Section Number	Section	Description of Change
Spelling, grammar, and formatting changes may have been made throughout SOP for clarity, correctness, and conformity.		
	Signature page	Updated Validator, Dept Supervisor
4.1	Safety	Updated Safety standard verbiage
5.6	Apparatus and Materials	Updated LIMS version

Concurrence Form

I acknowledge that I have read, undersood, and I concur with the standard operating procedure (SOP) listed below.

Employee Name _____

SOP 04-SPC

Revision 10

E-mail _____

Date Concurred _____

Submit

ATTACHMENT 3: Field Sampling Protocols to Avoid Cross-Contamination at Perfluorinated Chemical (PFC) Sites

FIELD SAMPLING PROTOCOLS TO AVOID CROSS-CONTAMINATION AT PERFLUORINATED CHEMICAL (PFC) SITES

The following are procedures/considerations to be made during field activities at potential perfluorinated chemical (PFC) release sites. A summary of the prohibited and acceptable items for PFC sites is included in Table 1. A checklist for field use is provided as Attachment 1.

These procedures apply to all personnel and subcontractors who collect or otherwise handle samples of soil, sediment, surface water, ground water, or drinking water for analysis of PFCs. These procedures should be reviewed by all on-site personnel prior to implementation of field activities. Given the low detection limits associated with PFC analysis and the many potential sources of trace levels of PFCs, field personnel shall act on the side of caution by strictly following these protocols, frequently replacing nitrile gloves, and rinsing field equipment to help mitigate the potential for false detections of PFCs. Specific items related to field sampling are discussed below.

Field Equipment

Do not use Teflon®-containing materials (e.g., Teflon® tubing, bailers, tape, plumbing paste, or other Teflon® materials) since Teflon® contains fluorinated compounds.

Do not use low-density polyethylene (LDPE) materials during sampling. High-density polyethylene (HDPE) and silicon materials are acceptable.

When using liners to collect soil samples during direct-push technology (DPT) or conventional drilling methodologies, **acetate liners are to be used**.

To avoid plastic coating or glue materials, **do not use waterproof field books**. Field reports will be documented on loose paper on masonite or aluminum clipboards (i.e. plastic clipboards, binders, or spiral hard cover notebooks are not acceptable) using a pen or pencil. Sharpies®/markers may be used.

Post-It Notes are not allowed on project sites.

Do not use markers other than Sharpies®markers. Pens will be used when documenting field activities in the field log and on field forms as well as labeling sample containers and preparing the Chain of Custody.

Do not use chemical (blue) ice packs during the sampling program. This includes the use of ice packs for the storage of food and/or samples.

Field Clothing and Personal Protective Equipment

Do not wear synthetic water resistant, waterproof, or stain-treated field clothing during the field program. Field clothing outerwear to be worn on-site should be restricted to natural fibers (preferably cotton) and not synthetic. Field clothing should

be laundered avoiding the use of fabric softener. Preferably, field gear should be cotton construction and well laundered (a minimum of 6 times from time of purchase). New cotton clothing may contain PFC related treatments. **Do not use new clothing** while sampling or sample handling.

Do not wear outer clothing or boots containing Gore-Tex™ during the sampling program as it consists of a PFC membrane. All outer safety footwear will consist of steel-toed boots made with polyurethane and polyvinyl chloride (PVC).

Do not wear Tyvek® clothing on-site since it contains fluorinated compounds.

Disposable nitrile gloves must be worn at all times. Further, a new pair of nitrile gloves shall be donned prior to the following activities at each sample location:

- Decontamination of re-usable sampling equipment;
- Prior to contact with sample bottles or water containers;
- Handling of any quality assurance/quality control samples including field blanks and equipment blanks; and,
- After the handling of any non-dedicated sampling equipment, contact with non-decontaminated surfaces, or when judged necessary by field personnel.

Sample Containers

Different laboratories may supply sample collection containers of varying sizes dependent on the type of media to be sampled (e.g., soil, groundwater, etc.). However, all samples should be collected in polypropylene or HDPE bottles fitted with an unlined (no Teflon®), polypropylene or HDPE screw cap.

Container labels will be completed using pen after the caps have been placed back on each bottle.

Glass containers should also be avoided due to potential loss of analyte through adsorption.

Wet Weather

Field sampling occurring during wet weather (e.g., rainfall and snowfall) should be conducted while wearing appropriate clothing that will not pose a risk for cross-contamination. Teams will avoid synthetic gear that has been treated with water- repellant finishes containing PFCs. Use rain gear made from polyurethane and wax-coated materials.

Teams should consider the use of a gazebo tent, which can be erected over the sample location and provide shelter from the rain. It should be noted that the canopy material is likely a treated surface and should be treated as such; therefore, gloves should be worn when moving the tent, changed immediately afterwards and further contact with the tent should be avoided until all sampling activities have been finished and the team is ready to move on to the next sample location.

Equipment Decontamination

Field sampling equipment, such as trowels and augers, that are utilized at each sample location will require cleaning between uses. Alconox® and Liquinox® soaps are acceptable for use since the Material Safety Data Sheets do not list fluoro-surfactants as an ingredient. However, **Decon 90 will not be used** during decontamination activities. Water used for the final rinse during decontamination of sampling equipment will be laboratory certified PFC-free water.

For larger equipment (e.g., drill rigs), decontamination will be conducted with potable water using a high-pressure washer and then rinsed using potable water. Details regarding the decontamination of drilling equipment and other heavy equipment are presented below under the heading "Decontamination Procedures for Drilling Equipment and Other Heavy Equipment at PFC Sites".

Personnel Hygiene

Field personnel will not use cosmetics, moisturizers, hand cream, or other related products as part of their personal cleaning/showering routine on the morning of a sampling event, as these products may contain surfactants and represent a potential source of PFCs.

Many manufactured sunblock and insect repellants contain PFCs and should not be brought or used on-site. Sunblock and insect repellants that are used on-site should consist of 100% natural ingredients. A list of acceptable sunscreens and insect repellents are listed in Table 1.

For washroom breaks, field personnel will leave the exclusion zone and then remove gloves and overalls. Field personnel should wash as normal with extra time for rinsing with water after soap use. When finished washing, the use of a mechanical dryer is preferred and the use of paper towel for drying is to be avoided (if possible).

Food Considerations

No food or drink shall be brought on-site, with the exception of bottled water and hydration drinks (i.e., Gatorade® and Powerade®), which will only be allowed to be brought and consumed within the staging area.

Visitors

Visitors to the site are asked to remain outside of the exclusion zone during sampling activities.

Table 1. Summary of Prohibited and Acceptable Items for PFC Sampling

Prohibited	Acceptable
Field	
Teflon® containing materials	High-density polyethylene (HDPE) materials
Low density polyethylene (LDPE) materials	Acetate liners
	Silicon tubing
Waterproof field books	Loose paper (non-waterproof)
Plastic clipboards, binders, or spiral hard cover notebooks	Aluminum field clipboards or with Masonite
	Sharpies®, pens
Post-It Notes	
Chemical (blue) ice packs	Regular ice
Field Clothing and	
New cotton clothing or synthetic water resistant, waterproof, or stain-treated clothing, outer clothing containing Gore-Tex™	Well-laundered clothing made of natural fibers (preferable cotton)
Clothing laundered using fabric softener	No fabric
Boots containing Gore-Tex™ in outer construction	Boots made with polyurethane and PVC
Tyvek®	Cotton Clothing
No cosmetics, moisturizers, hand cream, or other related products as part of personal cleaning/showering routine on the morning of sampling	**Sunscreens** - Alba Organics Natural Sunscreen, Yes To Cucumbers, Aubrey Organics, Jason Natural Sun Block, Kiss my face, Baby sunscreens that are "free" or "natural" **Insect Repellents** - Jason Natural Quit Bugging Me, Repel Lemon Eucalyptus Insect repellant, Herbal Armor, California Baby Natural Bug Spray, BabyGanics **Sunscreen and insect repellant -** Avon Skin So Soft Bug Guard Plus – SPF 30 Lotion
Sample	
LDPE or glass containers	HDPE or polypropylene
Teflon®-lined caps	Unlined polypropylene caps
Rain	
Waterproof or resistant rain gear	Gazebo tent that is only touched or moved prior to and following sampling activities
Equipment	
Decon 90	Alconox® and/or Liquinox®
Water from an on-site well	Potable water from remote drinking water supply
Food	
All food and drink, with exceptions noted on the right	Bottled water and hydration drinks (i.e. Gatorade® and Powerade®) to be brought and consumed only in the staging area

Attachment 1
Daily PFC Protocol Checklist

Date: _____ Installation Name: _____

Weather (*temp./precipitation*): _____ Site Name: _____

Field Clothing and PPE:

No outer clothing/boots containing Gore-Tex™

All safety boots made from polyurethane and PVC

No materials containing Tyvek®

Field crew has not used fabric softener on clothing

Field crew has not used cosmetics, moisturizers, hand cream, or other related products this morning

Field crew has not applied unauthorized sunscreen or insect repellant

Field Equipment:

No Teflon® or LDPE containing materials on-site

All sample materials made from stainless steel, HDPE, acetate, silicon, or polypropylene

No waterproof field books on-site

No plastic clipboards, binders, or spiral hard cover notebooks on-site

No adhesives (Post-It Notes) on-site

Coolers filled with regular ice only. No chemical (blue) ice packs in possession

Sample Containers:

All sample containers made of HDPE or polypropylene

Caps are unlined and made of HDPE or polypropylene

Wet Weather (as applicable):

Wet weather gear made of polyurethane and PVC only

Equipment Decontamination:

"PFC-free" water on-site for decontamination of sample equipment. No other water sources to be used.

Alconox and Liquinox to be used as decontamination materials

Food Considerations:

No food or drink on-site with exception of bottled water and/or hydration drinks (i.e., Gatorade and Powerade) that is available for consumption only in the staging area

If any applicable boxes cannot be checked, the Field Manager shall describe the noncompliance issues below and work with field personnel to address noncompliance issues prior to commencement of that day's work. Corrective action shall include removal of noncompliance items from the site or removal of worker offsite until in compliance. Repeated failure to comply with PFC sample protocols will result in the permanent removal of worker(s) from the site.

Describe the noncompliance issues (include personnel not in compliance) and action/outcome of noncompliance:

_____

_____

_____

Field Manager Name: _____

Field Manager Signature: _____ Time: _____

DECONTAMINATION PROCEDURES FOR DRILLING EQUIPMENT AND OTHER HEAVY EQUIPMENT AT PFC SITES

These procedures establish guidelines for use by field personnel in the decontamination of drilling equipment and other heavy equipment when conducting PFC environmental assessments. The details are applicable as general requirements for drilling and heavy equipment decontamination, and should also be used in conjunction with the project QAPP.

Compliance with this procedure is the responsibility of project management and field personnel. These procedures and the project QAPP should be reviewed before implementing drilling, development, and heavy equipment decontamination at the project site.

This section provides requirements for the construction of a temporary decontamination facility for drilling, development, and heavy equipment and the decontamination procedures to be followed. The project QAPP provides specific information regarding:

Types of equipment requiring decontamination under these procedures;
Location of the decontamination station;
Types and/or specifications on materials to be used in the fabrication of the decontamination station; and,
Types of materials and additional details on the procedures to be used in the decontamination process.

Field personnel associated with construction of the decontamination station or decontamination of drilling or heavy equipment must read these procedures and the project QAPP prior to implementation of related decontamination activities.

Decontamination Facility

A decontamination facility will be set up in an area exclusively for decontamination of drilling equipment and other heavy equipment. Decontamination of drilling equipment and other heavy equipment will be conducted within the station.

At a minimum, the station will be constructed such that all rinsates, liquid spray, soil, debris, and other decontamination wastes are fully contained and may be collected for appropriate waste management and disposal. The facility may be as simple as a bermed pad lined with approved PFC-free, high density polyethylene (HDPE) sheeting with an impermeable sump for collecting rinse water. More sophisticated designs involving self-contained metal decontamination pads in combination with bermed HDPE sheeting may also be used, depending on project-specific requirements. These requirements along with specific equipment and construction specifications for the decontamination facility will be provided in the project QAPP.

Decontamination of Downhole Equipment

Downhole drilling and development equipment (including but not limited to drill pipe, drive casing, drill rods, bits, tools, nondisposable bailers, etc.) will be thoroughly decontaminated before mobilization to each site and between borings or wells at each site or as required in the project QAPP. The standard procedure will be performed as described below. Decontamination will be performed in accordance with these procedures and the project QAPP.

Appropriate personal protective equipment (as specified in the project QAPP) must be worn by all personnel involved with the task to limit personal exposure.

Equipment caked with drill cuttings, soil, or other material will initially be scraped or brushed. The scrapings will be staged and appropriately handled.

Equipment will then be sprayed with potable water using a high-pressure washer.

Washed equipment that will be used to collect the samples or will come into contact with the sampled media (such as the direct-push cutting shoe) will then be final rinsed with certified PFC-free water.

Decontaminated downhole equipment (such as drill pipe, drive casing, bits, tools, bailers, etc.) will be placed on clean PFC-free, HDPE plastic sheeting to prevent contact with contaminated soil and allowed to air dry. If equipment is not used immediately, it will be covered or wrapped in PFC-free plastic sheeting to minimize airborne contamination.

Decontamination activities will be documented by field personnel in the field log and/or appropriate form(s), as specified in the project QAPP.

Decontamination of Heavy Equipment

Heavy equipment (e.g., drill rigs, development rigs, backhoes, trucks, and other earthmoving equipment) will be decontaminated between drilling sites or inside the contaminant reduction area prior to entering and leaving an exclusion zone. Decontamination will be performed in accordance with the project work plans. The standard procedure will be performed as described below.

Appropriate personal protective equipment will be worn by all personnel involved in the task, in order to limit personal exposure.

Heavy equipment caked with drill cuttings, soil, or other material will be initially scraped or brushed to remove bulk soil.

Heavy equipment will then be moved to the decontamination pad and sprayed with potable water using a high pressure washer.

Those portions of the heavy equipment that will potentially contact the sample will be rinsed in a final rinse with lab provided “PFC-free” water.

During the decontamination effort, fluid systems should be inspected for any leaks or problems, which might potentially result in an inadvertent release at the site, thereby

contributing to the volume of waste or contamination. Decontamination of heavy equipment should be performed before moving equipment between sites or before leaving the site.

Decontamination activities will be documented in the field log and appropriate form(s), as specified in the project QAPP.

SITE ZONING PROCEDURES TO AVOID CROSS-CONTAMINATION AT PERFLUORINATED CHEMICAL (PFC) SITES

Upon arrival at the site, the SAT Site Manager will designate the following zones (areas) in order to minimize PFC cross-contamination. All sampling personnel, EPA personnel, and visitors to the site should respect the requirements of each zone as defined herein.

Safe/Support Zone: This area is considered "clean", set aside from the area that contains the sample locations. Within this zone, personnel should continue to exhibit caution and minimize interaction with any probable PFC containing products. Sample management and health and safety meetings will take place in this zone. The Support Zone will act as the headquarters for the operation. This is the only zone in which the public or other visitors are allowed to interact with EPA or WESTON employees.

Reduction Zone: This zone is the transition between the Support Zone and the Exclusion Zone. Only samplers, Site Manager EPA WAM, and subcontractors should enter this zone. Within the Reduction Zone, samplers will don the proper protective equipment for their own safety and to minimize PFC cross-contamination at the sample locations (located within the Exclusion Zone). For example, anyone entering the Exclusion Zone wearing GoreTex™ lined boots, should first don latex boot covers and secure them with PFC-free tape in the Reduction Zone.

Exclusion Zone: This zone will cover the various work areas (monitoring well installation and soil and ground water sampling) in which well installation and sample collection takes place. No PFC containing materials will be allowed in this zone, and anyone entering the Exclusion Zone should have already donned appropriate PPE to minimize the possibility of PFC cross-contamination. Only samplers, Site Manager and EPA OSC, properly washed and donned, will be permitted in the Exclusion Zone. Please refer to *Field Sampling Protocols to Avoid Cross-Contamination at Perfluorinated Chemical (PFC) Sites* for further information.

When the Geoprobe is on site, the soil cores collected by the drillers will be processed in a special area of the Exclusion Zone designated by the Site Manager called **The Sampling Exclusion Zone**. There will be an HDPE table and sampling equipment in this area.

Decontamination Area: Decontamination of non-dedicated sampling equipment will take place in the same area each day, as designated by the Site Manager. This area will be in the Reduction Zone, on the edge of the Exclusion Zone so that properly decontaminated equipment can readily be placed on silicone sheets to air dry prior to being taken to the next sampling location.

ATTACHMENT 4: Project Action Limits

EPA Provisional Health Advisories for Perfluorooctanoic Acid (PFOA) and Perfluorooctane Sulfate (PFOS) in Drinking Water

January 8, 2009

Provisional Health Advisories for Perfluorooctanoic Acid (PFOA) and Perfluorooctane Sulfonate (PFOS)

1. Introduction

EPA recently concluded limited testing of agricultural sites in Alabama where sewage sludge was applied from a local wastewater treatment plant that receives wastewater from numerous industrial sources, including facilities that manufacture and use perfluorooctanoic acid (PFOA) and other perfluorinated chemicals (PFCs). The results from this limited testing indicated elevated levels of PFCs in the sludge and the soil that received the sludge. As a result, EPA has conducted sampling of public drinking water. The levels of PFOA and perfluorooctane sulfonate (PFOS) recently analyzed in community water systems in Lawrence and Morgan Counties are all lower than 0.04 ppb. Based on its current understanding, EPA believes these levels are not of concern and residents may rely upon public water systems. EPA will soon begin groundwater and surface water sampling to determine if PFOA or PFOS has migrated into any private drinking water supplies and ponds in the affected area.

The Office of Water (OW) has developed Provisional Health Advisory values[1] for PFOA and PFOS to assess potential risk from exposure to these chemicals through drinking water. Other PFCs have been found at this site. However, information on the toxicity of PFCs other than PFOS and PFOA is limited and therefore no attempt is made at the present time to develop Provisional Health Advisory values for these other PFCs.

2. Summary of Data for PFOA

Epidemiological studies of exposure to PFOA and adverse health outcomes in humans are inconclusive at present.

Several animal toxicological studies have been conducted using PFOA. These include subchronic, developmental/reproductive, and chronic toxicity/carcinogenicity studies in several animal species, in both sexes. An evaluation of these studies was conducted by the European Food Safety Authority (EFSA) and no-observed-adverse-effect level (NOAEL), lowest-observed-adverse-effect level (LOAEL), and critical endpoints identified (EFSA, 2008).

Among these studies, a recent and well conducted developmental toxicity study in mice was selected by the Office of Water (OW) as the critical study for the derivation of the

[1] Provisional Health Advisory values are developed to provide information in response to an urgent or rapidly developing situation. They reflect reasonable, health-based hazard concentrations above which action should be taken to reduce exposure to unregulated contaminants in drinking water. They will be updated as additional information becomes available and can be evaluated.

ED_001670_00012770-00272

Provisional Health Advisory for PFOA (Lau et al., 2006). In this study, CD-1 mice were given the ammonium salt of PFOA by oral gavage from gestational day (GD) 1 to 17 at doses of 0, 1, 3, 5, 10, 20 or 40 mg/kg/day. Significant increase in the incidence of full-litter resorption occurred at 5 mg/kg/day and higher doses. Weight gain in dams that carried pregnancy to term was significantly lower in the 20-mg/kg/day group. At GD 18, some dams were sacrificed for maternal and fetal examinations (group A), and the rest were treated once more with PFOA and allowed to give birth (group B). Postnatal survival, growth, and development of the offspring were monitored. PFOA induced enlarged liver in group A dams at all dosages, but did not alter the number of implantations. The percent of live fetuses was lower only in the 20-mg/kg/day group (74 vs. 94% in controls), and fetal weight was also significantly lower in this group. However, no significant increase in malformations was noted in any treatment group. The incidence of live birth in group B mice was significantly lowered by PFOA: ca. 70% for the 10- and 20-mg/kg/day groups compared to 96% for controls. Postnatal survival was severely compromised at 10 or 20 mg/kg/day, and moderately so at 5 mg/kg/day. Dose-dependent growth deficits were detected in all PFOA-treated litters except the 1-mg/kg/day group. Significant delays in eye-opening (up to 2–3 days) were noted at 5 mg/kg/day and higher dosages. Accelerated sexual maturation was observed in male offspring, but not in females. These data indicate maternal and developmental toxicity of PFOA in the mouse, leading to early pregnancy loss, compromised postnatal survival, delays in general growth and development, and sex-specific alterations in pubertal maturation (Lau et al., 2006).

Toxicity endpoints identified in the Lau et al. (2006) study included a number of developmental landmarks: neonatal eye opening, neonatal survival and body weight at weaning, reduced phalangeal ossification at term, live fetus weight at term, maternal liver weight at term, and maternal weight gains during pregnancy. The most sensitive endpoint was for increased maternal liver weight at term. This endpoint for liver effects was identified in a number of other studies described in EFSA (2008).

Benchmark dose (BMD_{10}) and the 95% lower bound on the BMD ($BMDL_{10}$) were calculated for these toxicity endpoints by the EFSA on the basis of raw data provided by the principal author (Lau, personal communication, November 18, 2008). The lowest $BMDL_{10}$ in the Lau et al. (2006) study was 0.46 mg/kg/day for increase in maternal liver weight at term. This value was used as the point of departure for the derivation of the Provisional Health Advisory value for PFOA. It should be noted that liver effects were also reported in studies in rats and monkeys. $BMDL_{10}$ values for increased liver weight in studies in mice and rats ranged from 0.29 to 0.74 mg/kg/day (EFSA, 2008). The $BMDL_{10}$ for Lau et al. (2006) was in the middle of this range.

3. Summary of Data for PFOS

Epidemiological studies of exposure to PFOS and adverse health outcomes in humans are inconclusive at present.

ED_001670_00012770-00273

Several animal toxicological studies have been conducted with PFOS. These include subchronic, developmental/reproductive, and chronic toxicity/carcinogenicity studies in several animal species, in both sexes. An evaluation of these studies was conducted by the EFSA (2008) and NOAEL, LOAEL and critical endpoints identified.

The subchronic toxicity study in Cynomolgus monkeys (Seacat et al., 2002) was selected by the OW as the critical study for the derivation of the Provisional Health Advisory value for PFOS. In the study by Seacat et al. (2002), groups of male and female monkeys received orally potassium PFOS at doses of 0, 0.03, 0.15 or 0.75 mg/kg/day for 183 days. Compound-related mortality in 2 of 6 male monkeys, decreased body weights, increased liver weights, lowered serum total cholesterol, lowered triiodothyronine (T_3) concentration, and lowered estradiol levels were seen at the highest dose tested. At 0.15 mg/kg/day, increased levels of thyroid-stimulating hormone (TSH) in males, reduced total T_3 levels in males and females, and reduced levels of high-density lipoproteins (HDL) in females were seen. A NOAEL of 0.03 mg/kg/day was identified in this study.

4. Calculation of Provisional Health Advisories for PFOA and PFOS

The general equation for the derivation of a Provisional Health Advisory is:

$$\frac{(\text{NOAEL or BMDL}_{10}) \times \text{BW} \times \text{RSC}}{\text{UF} \times \text{Extrapolation Factor} \times \text{Water intake}}$$

Where BW = body weight; RSC = relative source contribution; UF = uncertainty factors

The OW is using the exposure scenario of a 10-kg child consuming 1 L/day of drinking water to calculate the Provisional Health Advisories for PFOA and PFOS. This population subgroup was used because children, who consume more drinking water on a body weight basis than adults, have a higher exposure on a body weight basis than adults. The selection of children's exposure parameters will help to ensure that this Provisional Health Advisory is protective of sensitive populations potentially exposed. A default relative source contribution (RSC) of 20% was used to allow for exposure from other sources such as food, dust and soil. The relevant period of exposure for the Health Advisory is a short-term exposure. This time period is consistent with the toxicity data used for PFOA and PFOS, both of which rely upon subchronic data. The value should be protective of all population subgroup and lifestages.

Data derived extrapolation factors for toxicokinetics were developed to better approximate internal doses for PFOA and PFOS. This step was deemed important because of the marked differences in retention time among humans and the test species in which toxicological data were collected. Available data for PFOA from female mice indicate a half-life of 17 days and from humans, a half-life of 3.8 years (1387 days). Critically, measures of internal exposure should be used as the basis for interspecies extrapolation; the assessment is somewhat complicated by the lack of area under the curve (AUC) or clearance (CL) data. However, the one-compartment model foundation

ED_001670_00012770-00274

is useful to convert half-life data to clearance data, assuming steady-state has been reached (Equation 1).

$$\text{Half-life} = (\ln 2 \text{ or } 0.693) \times \text{Volume of Distribution} / \text{CL} \quad (1)$$

The volume of distribution of 198 $\pm$ 69 ml/kg has been estimated in female monkeys (Butenhoff et al., 2004). Olsen et al. (2007) summarized other findings on PFOS and PFOA as indicating primarily an extracellular distribution volume. Olsen et al. (2007) also cited other reports that these agents were highly bound to plasma proteins in rats, monkeys and humans. Together, these data support using the same volume of distribution for rodents and humans, based on the findings (198 ml/kg) in monkeys.

The mouse half-life of 17 days converts:
CL = (0.693 x 198 ml/kg) / 17 days = 8.07 ml/kg/day

The human half-life of 1387 days converts:
CL = (0.693 x 198 ml/kg) / 1387 days = 0.10 ml/kg/day

Calculating the toxicokinetic portion of the interspecies on the basis of plasma CL would be:

CL animal / CL human = 8.07 ml/kg/day / 0.10 ml/kg/day = 80.7

The total interspecies correction derived from using a 3X for toxicodynamics and 81X for toxicokinetics is 243X.

To calculate the Provisional Health Advisory for PFOA, a default intraspecies uncertainty factor of 10 was applied to the $BMDL_{10}$ of 0.46 mg/kg/day to account for variation in susceptibility within the human population. A default uncertainty factor of 3 was used for toxicodynamic differences between animals and humans.

The following Provisional Health Advisory is obtained:

$$\text{PFOA Provisional Health Advisory} = \frac{0.46 \times 1000 \times 10 \times 0.2}{10 \times 3 \times 81 \times 1} = 0.4\ \mu g/L$$

Similarly, a data-derived extrapolation factor was developed for PFOS. The half-lives of PFOS in humans and in male and female monkeys were estimated by Lau et al., (2007) to be 5.4 years and 150 days, respectively.

The monkey half-life of 150 days converts:
CL = (0.693 x 198 ml/kg) / 150 days = 0.915 ml/kg/day

The human half-life of 1971 days converts:
CL = (0.693 x 198 ml/kg) / 1971 days = 0.07 ml/kg/day

ED_001670_00012770-00275

Calculating the toxicokinetic portion of the interspecies on the basis of plasma clearance would be:

CL animal / CL human = 0.915 ml/kg/day / 0.07 ml/kg/day = 13.1

The total interspecies correction derived from using a 3X for toxicodynamics and 13X for toxicokinetics is 39X.

To calculate the Provisional Health Advisory for PFOS, a default intraspecies uncertainty factor of 10 was applied to the NOAEL of 0.03 mg/kg/day to account for variation in susceptibility within the human population. A default uncertainty factor of 3 was used for toxicodynamic differences between animals and humans.

The following value is obtained:

$$\text{PFOS Provisional Health Advisory} = \frac{0.03 \times 1000 \times 10 \times 0.2}{10 \times 3 \times 13 \times 1} = 0.2\ \mu g/L$$

REFERENCES

Butenhoff JL, Kennedy GL Jr, Hinderliter PM et al. (2004). Pharmacokinetics of perfluorooctanoate in cynomolgus monkeys. Toxicol Sci. 82:394-406.

EFSA (2008) European Food Safety Authority. Opinion of the Scientific Panel on Contaminants in the Food Chain on Perfluorooctane sulfonate (PFOS) and Perfluorooctanoic acid (PFOA) and their Salts. EFSA Journal, 2008, Journal number 653, 1-131; available at http://www.efsa.europa.eu/EFSA/efsa_locale-1178620753812_1211902012410.htm).

Lau C, Thibodeaux JR, Hanson RG et al. (2006). Effects of perfluorooctanoic acid exposure during pregnancy in the mouse. Toxicol. Sci. 90 (2) 510-518.

Lau C, Anitole K, Hodes C et al. (2007). Perfluoroalkyl acids: A review of monitoring and toxicological findings. Toxicol. Sci. 99 (2) 366-394.

Olsen GW, Burris JM, Ehresman DJ et al. (2007). Half-life of serum elimination of perfluorooctanesulfonate, perfluorohexanesulfonate, and perfluorooctanoate in retired fluorochemical production workers. Environ Health Perspect. 115: 1298–1305.

Seacat AM, Thomford PJ, Hansen KJ et al. (2002). Subchronic toxicity studies on perfluorooctanesulfonate potassium salt in Cynomolgus monkeys. Toxicol. Sci. 68, 249-264.

ED_001670_00012770-00276