To: Lin, Sharon[Lin.Sharon@epa.gov]
Cc: Ramirez, Larry@DTSC[Larry.Ramirez@dtsc.ca.gov]; Soria, Maria@DTSC[Maria.Soria@dtsc.ca.gov]
From: Lynch, Philip@DTSC
Sent: Thur 12/18/2014 10:32:54 PM
Subject: March 21, 2011 DTSC Letter to Valero Benicia Refinery
DTSC Ltr to Valero Benicia March 21_2011.pdf

Hi Sharon

Attached is the March 21, 2014 letter DTSC sent to Valero Benicia Refinery.

If any questions, please contact me or Larry Ramirez.

Dan Lynch

Senior Environmental Scientist (Supervisor)

Enforcement and Emergency Response

Department of Toxic Substances Control

1515 Tollhouse Road

Clovis, California 93611

Ph: (559) 297-3955

Cell: (559) 593-6088

Fax: (559) 297-3904

Internet: plynch@dtsc.ca.gov

Department of Toxic Substances Control

Linda S. Adams
Acting Secretary for
Environmental Protection

Leonard E. Robinson
Acting Director
8800 Cal Center Drive
Sacramento, California 95826-3200

Edmund G. Brown Jr.
Governor

March 21, 2011

Certified No.: 7009 1680 0002 0724 9254

Mr. John Lazorik
Staff Environmental Engineer
Valero Benicia Refinery
3400 East Second Street
Benicia, California 94510-1097

Dear Mr. Lazorik:

The Department of Toxic Substances Control (DTSC) has received your letter, dated February 3, 2011, that provides information about Valero Benicia Refinery's (Valero) procedures to maintain "control" of the satellite accumulation areas established during the ethylaluminum dichloride (EADC) line cleanout operation conducted in 2009 by Valero. DTSC has reviewed the information provided and has determined that Valero has met the applicable California regulatory requirements.

In March 2010, DTSC inspected Valero's Benicia facility and determined in a Summary of Violations (SOV) issued by DTSC on September 28, 2010 that Valero's "satellite accumulation areas" established during an EADC line cleanout process were operated in violation of the requirements set forth in California Code of Regulations, title 22, section 66262.34(e)(1)(A). The regulations require that the waste be "accumulated in containers, other than tanks, at the initial accumulation point which is at or near the area where the waste is generated and which is under the control of the operator of the process generating the waste."

During our meeting on January 14, 2011, you provided an overview of Valero's refinery safety program and the various levels of controls that are continuously in place to ensure that all operations are conducted in a safe manner. Subsequently, you provided additional information in your February 3, 2011 letter which is relevant to demonstrate that Valero maintained proper "control" procedures specifically for the EADC line cleanout work. These additional controls included:

Printed on Recycled Paper

1) Establishing an EADC-specific "Controlled Access Procedure and Special Operating Signal". This process established several controls including:

a) Requirements that each of the satellite area drums be barricaded with red hazard tape bearing the warning "Danger, Authorized Personnel Only" throughout the duration of the project to prevent unauthorized personnel from entering the EADC work areas.
b) Identification and communication of EADC and Isopar chemical hazards.
c) Identification of appropriate personal protective equipment to be used by employees working on the EADC project.
d) A checklist for EADC workers to follow to ensure that all EADC satellite accumulation drums were properly labeled and handled.
e) Identification of the "exact" location of each satellite accumulation area.
f) Mitigation measures to address the hazards associated with EADC and Isopar.

2) EADC line repairs were carried out only by staff within the Utilities Unit and access to the satellite accumulation areas was restricted to all other employees and visitors/contractors.

3) An EADC project-specific "job hazard analysis" was completed to inform all workers in the refinery of the EADC line cleanout work being conducted.

4) All of the EADC-related 55-gallon drums in each of the satellite accumulation areas had proper hazardous waste labeling.

5) Opening EADC drums in the satellite accumulation areas required the approval of the Utilities Unit Supervisor.

6) No forklifts of other motorized equipment were allowed in the EADC areas without the approval of the Utilities Unit Supervisor.

7) All workers doing work in the vicinity of the EADC drums in the satellite accumulation areas were required to have appropriate personal protective equipment and training on emergency response procedures.

Based on DTSC's assessment of the aforementioned operational procedures, DTSC has determined that Valero was in compliance with the satellite accumulation regulatory requirements during its EADC line cleanout project. Therefore, based on this additional information and our meeting in January 2011, DTSC is withdrawing the SOV.

Printed on Recycled Paper

Thank you for your cooperation and assistance with resolving this matter. Please feel free to contact me at (916) 255-6565 or Mr. Ruben Medina at (559) 297-3908 if you have any questions on this matter.

Sincerely,

Ruben R. Medina
For

Donald R. Plain, Chief
Emergency Response and Enforcement Branch
Enforcement and Emergency Response Program
Department of Toxic Substances Control

Printed on Recycled Paper

To: Lin, Sharon[Lin.Sharon@epa.gov]
From: Arora, Asha@DTSC
Sent: Thur 9/3/2015 6:27:53 PM
Subject: RE: Shell Refinery Receiving Offsite Wastes

This is accepting offsite waste…

From: Lin, Sharon [mailto:Lin.Sharon@epa.gov]
Sent: Thursday, September 03, 2015 11:26 AM
To: Arora, Asha@DTSC
Subject: RE: Shell Refinery Receiving Offsite Wastes

I checked the block flow diagram of the effluent treatment plant. Yes, catalyst plant wastewater flows to the shell refinery effluent treatment plant, ETP-1.

Sharon

From: Arora, Asha@DTSC [mailto:Asha.Arora@dtsc.ca.gov]
Sent: Thursday, September 03, 2015 9:58 AM
To: Lin, Sharon
Subject: Shell Refinery Receiving Offsite Wastes

Hi Sharon,

One of the Contra Costa County CUPA inspector called me today for questions at Shell Catalyst facility (Adjacent to the Shell Refinery. If you recall that Shell Catalyst was included in their evacuation plan). She also informed me that Shell catalyst discharges rinses from their drum rinsing operations under a tiered permit (CESW) and QA/QC lab to the of Shell Refinery's wastewater treatment.

She is a good inspector and she came from the Ventura County CUPA to the Contra Costa County CUPA a couple of years ago.

Thank you
Asha

Asha Arora

Senior Environmental Scientist (Specialist)

Department of Toxic Substances Control

Berkeley Office

(510) 540-3874

Asha.Arora@dtsc.ca.gov

To: Lin, Sharon[Lin.Sharon@epa.gov]
From: Arora, Asha@DTSC
Sent: Wed 1/20/2016 9:15:12 PM
Subject: FW: Shell TP
shell-tp-2015 .pdf

Hi Sharon,

The Contra Costa County conducted a TP inspection of Shell Refinery in December 2015 (see copy attached).

Thanks
Asha

-----Original Message-----
From: Melissa.Hagen@hsd.cccounty.us [mailto:Melissa.Hagen@hsd.cccounty.us]
Sent: Wednesday, January 20, 2016 12:54 PM
To: Arora, Asha@DTSC
Cc: Seth.Heller@hsd.cccounty.us; Steve.Morioka@hsd.cccounty.us
Subject: Shell TP

(See attached file: shell-tp-2015 .pdf)

Asha,

CCHS last TP inspection at Shell per your request. Our follow-up is on hold pending coordination with DTSC (you).

Thank you.

Melissa J. Hagen
Hazardous Materials Specialist
Contra Costa Health Services-HazMat
4585 Pacheco Blvd., Suite 100
Martinez, CA 94553
(925) 335-3200 Office

CONTRA COSTA HEALTH SERVICES

Contra Costa Health Services / Hazardous Materials Programs
4585 Pacheco Boulevard, Suite 100, Martinez, CA 94553
Telephone (925) 335-3200 FAX (925) 646-2073
WWW.CCHEALTH.ORG/GROUPS/HAZMAT
WILLIAM B. WALKER, M.D., HEALTH SERVICES DIRECTOR • RANDALL L. SAWYER, DIRECTOR

Tiered Permitting Inspection/Compliance Checklist

FACILITY NAME	SITE ID	INSPECTION DATE
Martinez Refinery Shell Oil	729718/10476676	12/18/15

INSPECTION TYPE: Routine / Follow-Up / Other	VIOLATION CLASSIFICATIONS: M = Minor Cl I = Major Cl II = Medium / Repeat Minor	EPA ID CAD009164021

Onsite Permitting Tier: PBR CA CESW CESQT CEL CECL

Unit Number	Unit Name	Tank/Container	Notified Tier	Correct Tier
AT 1+2	WWT	2	PBR	
ST 1	Selenium	1	CA	
CR 1	Container	1	CESW	

California Code of Regulations (CCR), Title 22, Chapter 45, §67450.1 et al
California Health and Safety Code (HSC), Division 20, Chapter 6.5, §25201 et al

Viol Code	Authority	Requirement	Viol Class	Violation Due Date/ Violation Corrected
TP01	HSC 25201 (a)	Unauthorized Treatment		
		ONSITE TREATMENT REQUIREMENT		
TP02	CCR 67450.2 (b)	Form DTSC 1772 Properly Completed		
TP03	CCR 67450.2 (b)	Facility Diagram Submitted/Adequate		
TP04	CCR 67450.3 (c)(5) & HSC 25200.3 (c)(7)	Records of Pretreatment Compliance		
		ALL UNITS		
TP05	HSC 25201	Only hazardous waste generated onsite is treated onsite		
TP06	CCR 67450.2 (b) & CCR 67450.3 (c)	Unit Notification Information		
TP07	HSC 25201.5 (d)(7)(A)	Estimated Treatment Volume		
TP08	HSC 25201.5 (d)(7)(A)	Waste Evaluation/Identification		See note
		WASTE STREAM NOTIFICATION		
TP09	HSC 25201.5 (a)(b)(c)	Treatment Process		
TP10	HSC 25201.5 (d)(6)(9)	Residual Management Information		
TP11	HSC 25201.5 (d)(2)	Federal Permit Requirement		
TP12	HSC 25200.3 (c)(6)	Written Instructions & Logs		
TP13	CCR 67450.3 (c)(8)(B)	Written Inspection Schedule		
TP14	CCR 67450.3 (c)(8), HSC 25200.3 (c)(6)(7), & HSC 25201.5 (d)(5)	Written Inspection Log		
TP15	HSC 25246 & CCR 67450.3 (c)(11)	Closure Notification		
		FOR CA OR PBR NOTIFIERS:		
TP16	HSC 25209.0 & HSC 25205.14 (c)	Waste Minimization Certification		
		FOR CA OR PBR NOTIFIERS:		
TP17	CCR 67450.3 (c)(12)(E)	Secondary Containment		
TP18	HSC 25245.4 & CCR 67450.13	Financial Assurance for closure		
TP19	HSC 25200.10, HSC 25200.14, & CCR 67450.7	Phase 1 Assessment		
		PBR UNITS		
TP20	CCR 67450.3 (c)(7)	Unit Labeled		
TP21	CCR 67450.3 (c)(8)(A)	Written Waste Analysis Plan		
TP22	CCR 67450.3 (c)(8)(A)	Waste Analysis Records		
TP 23	HSC 25246 & CCR 67450.3	Written Closure Plan		
TP24	—	Other:		

Total Time for Review and Inspection (in 15 minute increments): 32 ☐ Notice to Comply ☐ Notice of Violation ☐ No Violations Observed

Facility Rep Initials NAB CC Hazmat Rep Initials SRKH Date 12/18/15

CONTRA COSTA HEALTH SERVICES

Contra Costa Health Services / Hazardous Materials Programs
4585 Pacheco Boulevard, Suite 100, Martinez, CA 94553
Telephone (925) 335-3200 FAX (925) 646-2073
WWW.CCHEALTH.ORG/GROUPS/HAZMAT
WILLIAM B. WALKER, M.D., HEALTH SERVICES DIRECTOR • RANDALL L. SAWYER, DIRECTOR

Tiered Permitting Inspection/Compliance Checklist

FACILITY NAME	SITE ID	INSPECTION DATE
Martinez Refinery Shell Oil	729718/1047676	12/18/15

INSPECTION TYPE: Routine / Follow-Up / Other	VIOLATION CLASSIFICATIONS: M = Minor Cl I = Major Cl II = Medium / Repeat Minor	EPA ID CAD009164021

Onsite Permitting Tier: PBR CA CESW CESQT CEL CECL

Unit Number	Unit Name	Tank/Container	Notified Tier	Correct Tier
CT1	Chemical Treatment Unit	2	PBR	

California Code of Regulations (CCR), Title 22, Chapter 45, §67450.1 et al
California Health and Safety Code (HSC), Division 20, Chapter 6.5, §25201 et al

Viol Code	Authority	Requirement	Viol Class	Violation Due Date/ Violation Corrected
TP01	HSC 25201 (a)	Unauthorized Treatment		
		ONSITE TREATMENT REQUIREMENT		
TP02	CCR 67450.2 (b)	Form DTSC 1772 Properly Completed		
TP03	CCR 67450.2 (b)	Facility Diagram Submitted/Adequate		
TP04	CCR 67450.3 (c)(5) & HSC 25200.3 (c)(7)	Records of Pretreatment Compliance		
		ALL UNITS		
TP05	HSC 25201	Only hazardous waste generated onsite is treated onsite		
TP06	CCR 67450.2 (b) & CCR 67450.3 (c)	Unit Notification Information		
TP07	HSC 25201.5 (d)(7)(A)	Estimated Treatment Volume		
TP08	HSC 25201.5 (d)(7)(A)	Waste Evaluation/Identification		
		WASTE STREAM NOTIFICATION		
TP09	HSC 25201.5 (a)(b)(c)	Treatment Process		
TP10	HSC 25201.5 (d)(6)(9)	Residual Management Information		
TP11	HSC 25201.5 (d)(2)	Federal Permit Requirement		
TP12	HSC 25200.3 (c)(6)	Written Instructions & Logs		
TP13	CCR 67450.3 (c)(8)(B)	Written Inspection Schedule		
TP14	CCR 67450.3 (c)(8), HSC 25200.3 (c)(6)(7), & HSC 25201.5 (d)(5)	Written Inspection Log		
TP15	HSC 25246 & CCR 67450.3 (c)(11)	Closure Notification		
		FOR CA OR PBR NOTIFIERS:		
TP16	HSC 25209.0 & HSC 25205.14 (c)	Waste Minimization Certification		
		FOR CA OR PBR NOTIFIERS:		
TP17	CCR 67450.3 (c)(12)(E)	Secondary Containment		
TP18	HSC 25245.4 & CCR 67450.13	Financial Assurance for closure		
TP19	HSC 25200.10, HSC 25200.14, & CCR 67450.7	Phase 1 Assessment		
		PBR UNITS		
TP20	CCR 67450.3 (c)(7)	Unit Labeled		
TP21	CCR 67450.3 (c)(8)(A)	Written Waste Analysis Plan		
TP22	CCR 67450.3 (c)(8)(A)	Waste Analysis Records		
TP 23	HSC 25246 & CCR 67450.3	Written Closure Plan		
TP24	—	Other:		

Total Time for Review and Inspection (in 15 minute increments): ☐ Notice to Comply ☐ Notice of Violation ☐ No Violations Observed

Facility Rep Initials NAB | CC Hazmat Rep Initials SRHN | Date 12/18/15

CONTRA COSTA HEALTH SERVICES

Contra Costa Health Services / Hazardous Materials Programs
4585 Pacheco Boulevard, Suite 100, Martinez, CA 94553
Telephone (925) 335-3200 FAX (925) 646-2073
WWW.CCHEALTH.ORG/GROUPS/HAZMAT
WILLIAM B. WALKER, M.D., HEALTH SERVICES DIRECTOR • RANDALL L. SAWYER, DIRECTOR

CONTINUATION SHEET

Program: ☐ UST ☐ BP ☐ HW ☒ TP ☐ SWP ☐ APSA ☐ CalARP ☐ GB ☐ Other

FACILITY NAME	SITE ID	DATE
Martinez Refining Shell Oil	729718 / 10476676	12/18/15

Comments:

Note: TP08 - Vanadium is listed on waste profiles & and manifests for selenium and vanadium waste from the CA ST 1 treatment unit. Michael ~~Monson~~ Manson mentioned that occasional selenium and vanadium may be present at levels to qualify as a CA waste. Review of data points presented in audit did not support this observation. Please provide additional data regarding selenium and vanadium levels in centrifuge solid ERM.

Notes: Additional information and research required.
CCCHSD HMP will review Part B of permit application with DTSC
- CCCHSDHMP would like to review additional information for potential waste characterization and determination for ammonia in saw water waste
- CCCHSDHMP will review cluster data

Facility Rep Initials	CC Hazmat Rep Initials	Date
NAB	SRKW	12/18/15

To: Lin, Sharon[Lin.Sharon@epa.gov]
From: Arora, Asha@DTSC
Sent: Thur 9/3/2015 4:58:22 PM
Subject: Shell Refinery Receiving Offsite Wastes

Hi Sharon,

One of the Contra Costa County CUPA inspector called me today for questions at Shell Catalyst facility (Adjacent to the Shell Refinery. If you recall that Shell Catalyst was included in their evacuation plan). She also informed me that Shell catalyst discharges rinses from their drum rinsing operations under a tiered permit (CESW) and QA/QC lab to the of Shell Refinery's wastewater treatment.

She is a good inspector and she came from the Ventura County CUPA to the Contra Costa County CUPA a couple of years ago.

Thank you
Asha

Asha Arora

Senior Environmental Scientist (Specialist)

Department of Toxic Substances Control

Berkeley Office

(510) 540-3874

Asha.Arora@dtsc.ca.gov

To: Lin, Sharon[Lin.Sharon@epa.gov]
Cc: Schofield, John[Schofield.John@epa.gov]; Peebler, Diana@DTSC[Diana.Peebler@dtsc.ca.gov]
From: Arora, Asha@DTSC
Sent: Fri 4/24/2015 9:25:52 PM
Subject: RE: SMR

Hi Sharon,

Sure, I will happy to provide any assistance I can.

I would like to review plot plans, PID, any other information that you might have for the tiered permitting units ahead of time and then verify in the field.

My family plans just changed today. First 2 weeks of July would work better for me. I will keep you posted if there is any changes in dates.

Thank you
Asha

From: Lin, Sharon [Lin.Sharon@epa.gov]
Sent: Friday, April 24, 2015 1:44 PM
To: Arora, Asha@DTSC
Cc: Schofield, John
Subject: SMR

Hi, Asha,

We (actually field folks in EPA Region 9's laboratory in Richmond and EPA RCRA enforcement) plan to be out at the Shell Martinez Refinery to conduct some data gap sampling. Would you be available to conduct a technical review of the tiered permitted units at the SMR at the same time period? It would be a great learning opportunity for the EPA team. The EPA folks are looking at late June and July at this point. Please advise your availability. Thanks!

Sharon Lin, P.E.

U.S. Environmental Protection Agency Region 9

Enforcement Division

Air, Waste and Toxics Branch, ENF-2-2
75 Hawthorne Street

San Francisco, CA 94105

Tel: (415) 972-3446

Email: Lin.Sharon@epa.gov

To: Lin, Sharon[Lin.Sharon@epa.gov]
Cc: Schofield, John[Schofield.John@epa.gov]
From: Arora, Asha@DTSC
Sent: Tue 4/14/2015 4:10:37 PM
Subject: RE: available May7?

Hi Lin,

Yes, I am available in the afternoon of May 7th. Melissa had been approving Shell's notification with multiple CESQT units when they were treating thousand of gallons of waste. It will good if you can forward their file to me to review and discuss with you. I will be conducting Contra Costa County CUPA evaluation on May 5-6, 2015. I already completed two oversight inspections and a plan to conduct and a third oversight inspection on April 20th in Richmond.

I informed the following to Melissa for Shell on March 24, 2014 as I was traveling:
I just looked at CERS for Shell, Martinez in my hotel. Please tell me what are your Qs. It appears that you guys have been accepting their TP submission until 2014. Their TP submission should have been rejected from the beginning.

During the February 2014 training, I explained that if a facility has a CESQT unit, then they can't have any other treatment occurring facility wide. Please look at HSC, section 25201.5(a)(2)

25201.5. (a) Notwithstanding any other provision of law, a hazardous waste facilities permit is not required for a generator who treats hazardous waste of a total weight of **not more than 500 pounds, or a total volume of not more than 55 gallons,** in any calendar month, if both of the following conditions are met:

(1) The hazardous waste is not an extremely hazardous waste and is listed in Section 67450.11 of Title 22 of the California Code of Regulations, as in effect on January 1, 1992, as eligible for treatment pursuant to the regulations adopted by the department for operation under a permit-by-rule and the treatment technology used is approved for that waste stream in Section 67450.11 of Title 22 of the California Code of Regulations for treatment under a permit-by-rule.

(2) The **generator is not otherwise required to obtain a hazardous waste facilities permit or other grant of authorization for any other hazardous waste management activity at the facility.**

Melissa has attended my trainings a number of times....

Thank you
Asha

Asha Arora

Senior Environmental Scientist (Specialist)

Department of Toxic Substances Control

(510) 540-3874

Asha.Arora@dtsc.ca.gov

From: Lin, Sharon [Lin.Sharon@epa.gov]
Sent: Tuesday, April 14, 2015 8:56 AM
To: Arora, Asha@DTSC
Cc: Schofield, John
Subject: available May7?

Hi, Asha,

It looks like we are coming to your office to discuss CUPA enforcement referral process on May 7. The meeting is supposed to take place from 10-noon. I am wondering if you are available in the afternoon to chat about the tiered permits at the Shell Martinez Refinery. We, along with two inspectors from your Clovis office, were at the facility at the end of March. I am the lead for the EPA enforcement action.

Melissa Higgins with CC County CUPA gave us her TP file which was over 1500 pages (many of the pages are multiple copies of the same reports). Yesterday I asked her to prepare a short summary of the status of all the units at the facility that are covered under the tiered permitting program. I have some questions for you since you are the TP expert. I am particularly interested in finding out the facility's tiered permitting history and whether TP is sufficiently protective for some of the operating units (especially where is significant VOC air emission).

I am still reading through the TP file. Look forward to talking. Thanks!

Sharon Lin, P.E.

U.S. Environmental Protection Agency Region 9

Enforcement Division

Air, Waste and Toxics Branch, ENF-2-2
75 Hawthorne Street

San Francisco, CA 94105

Tel: (415) 972-3446

Email: Lin.Sharon@epa.gov

To: Lin, Sharon[Lin.Sharon@epa.gov]
Cc: michael.monson@shell.com[michael.monson@shell.com]
From: michael.monson@shell.com
Sent: Tue 4/21/2015 8:13:16 PM
Subject: PSC TTU

Sharon,

In response to your voicemail, the PSCs Transportable Treatment Unit (TTU) is a centrifuge unit that is used for phase separation of tank bottoms. It was last used last summer on a tank project.

Michael Monson

Staff Engineer - Environmental

Martinez Refinery, 3485 Pacheco Blvd, Martinez CA 94553

Phone: 925-313-5516

Email: michael.monson@shell.com

Internet: http://www.shelloilproductsus.com/

To: Parker, David[Parker.David@epa.gov]
Cc: Anderson, Julie[Anderson.Julie@epa.gov]; Vega, Jackie[Vega.Jackie@epa.gov]; Lin, Sharon[Lin.Sharon@epa.gov]; Rollins, Christopher[Rollins.Christopher@epa.gov]
From: McDaniel, Doug
Sent: Tue 7/14/2015 9:30:52 PM
Subject: Chevron HI
NEIC Hawaii Proposal July 2015.docx

Hi David –

This proposal for NEIC support at the Chevron Hawaii refinery is part of the FY15 funding cycle – I am told that a placeholder from OECA was put in. We and the State of Hawaii very much appreciate your help in this capacity building effort.

Doug

Douglas K. McDaniel

Chief, Waste and Chemical Section

Enforcement Division

U.S. EPA Region 9

(415) 947-4106

Region 9 Project Proposal for
RCRA Process Based Inspection
Hawaii Chevron Refinery

FY 2015 NEIC Civil & Next Gen Enforcement Projects
NEIC Project #VP1146

Request:

A RCRA process based inspection at the Hawaii Chevron petroleum refinery in 2016. The inspection will also serve as a training opportunity for Hawaii State Department of Health enforcement personnel.

Location:

Hawaii Refinery, Chevron Products Company (HIT 160 010 005)

Scope:

Conduct a thorough RCRA process based inspection, including investigation of surface impoundments and potential hazardous waste storage, treatment and disposal units; investigation of potential impact to groundwater and surface water (ocean); and investigation of hazardous waste treatment methods/practices.

Objectives:

1. State capacity building:
   - Hawaii has sought assistance from Region 9 to address RCRA surface impoundment issues at industrial facilities in the state;
   - Hawaii inspectors requested training on how to conduct RCRA process based inspections at complex facilities.
2. Multi-media environmental issue:
   This facility has been cited for violations by several Region 9 enforcement programs and the associated enforcement actions are currently underway:
   - TRI inspection (June 2014): approximately 48 counts of non-reporting and/or under-reporting violations;
   - NPDES inspection (April 2012): unpermitted discharge of refinery drainage leading to the ocean constitutes; violations of permit limits; wastewater treatment ponds lack capacity; associated process controls.
   - CAA: violated consent decree for SEMS downtime and LDAR failure reports; PSD permit violations for 2 boilers in 2011.
3. Potential RCRA issues (similar to the Valero Benicia refinery):
   - Surface impoundment;
   - Land treatment unit;
   - Potential environmental release including groundwater and surface water impact;
   - Waste determination.

Environmental Justice Area:

- 10 of 12 EJ SCREEN base indices triggered.
- >60% in neighboring blocks for all 10 triggered indices.
- >80% for proximity to Superfund NPL sites, RMP, TSDF, and Wastewater Dischargers.

Priorities:

- Process based inspections are a Region 9 RCRA enforcement priority;
- OECA Office of Compliance Pesticides, Waste and Toxics Branch supports process based RCRA investigations at refineries, including technical assistance/capacity building for the states.

Anticipated Sampling and Analysis:

Yes. Surface impoundment(s) for TCLP analysis.

Requested Timing of this Inspection:

March 2016. Targeting for wet weather rainy season, typically November to March in Hawaii.

Other Information (see attachments):

- RCRA waste description/quantity from 2001, 2003, 2005, 2007, 2009, 2011, 2013 biennial report.
- Facility's 2011 Annual report for Benzene Waste Operations NESHAP
- Clean Water Act Inspection Report

To: Soria, Maria@DTSC[Maria.Soria@dtsc.ca.gov]
Cc: Lin, Sharon[Lin.Sharon@epa.gov]; Koch, Lori@DTSC[Lori.Koch@dtsc.ca.gov]
From: Ahmad, Waqar@DTSC
Sent: Tue 1/12/2016 10:46:05 PM
Subject: RE: Request for closure and post closure documents for Shell Martinez Refinery CAD009164021 - RM-17 incinerator + Vessel 482

Hi Maria/Sharon:

I have been to locate these documents and have uploaded them on the Envirostor.

https://www.hwmpenvirostor.dtsc.ca.gov/regulators/site_documents/1000477433/Shell%20Vessel%20482%20F

https://www.hwmpenvirostor.dtsc.ca.gov/regulators/site_documents/5073697745/Shell%20RM-17%20Closure%20Cert_19960412.pdf

Thank you,

Waqar

510.540.3932

From: Soria, Maria@DTSC
Sent: Monday, November 16, 2015 5:14 PM
To: Ahmad, Waqar@DTSC; Koch, Lori@DTSC
Cc: Lin, Sharon (Lin.Sharon@epa.gov)
Subject: FW: Request for closure and post closure documents for Shell Martinez Refinery CAD009164021 - RM-17 incinerator + Vessel 482

Waqar,

USEPA is requesting documents that are not uploaded in Envirostor (I couldn't find them). Can you email them to Sharon Lin at Lin.Sharon@epa.gov ? Thank you.

From: Schofield, John [mailto:Schofield.John@epa.gov]
Sent: Monday, November 16, 2015 1:51 PM
To: Soria, Maria@DTSC
Cc: Lin, Sharon; McDaniel, Doug
Subject: Request for closure and post closure documents for Shell Martinez Refinery CAD009164021 - RM-17 incinerator + Vessel 482

Maria,

As part of completing our inspection of the Shell Martinez facility, EPA is requesting the following information: **closure report and any post-closure documents for the following closed Shell Martinez Refinery units: RM-17 and Vessel 482.**

The RM-17 incinerator was closed on December 27, 1996. Vessel 482 hazardous waste storage tank was closed on April 3, 1997. The RCRAInfo database indicated a clean closure verification date of 2/3//97 for both units. The attached permit contains detailed descriptions of the units.

Could you please forward this request to the appropriate DTSC person that could help us with obtaining this information?

For any questions concerning this request, please have the person contact Sharon Lin at 415-972-3346.

Thank you for your assistance in helping us obtain the information.

regards,

John

****
John Schofield
U. S. Environmental Protection Agency
Region 9
Enforcement Division

Air, Waste and Toxics Branch, ENF-2-2
75 Hawthorne Street
San Francisco, CA 94105
(415) 972-3386
(415) 947-3530 (fax)
schofield.john@epa.gov
****

NOTE: This email, including any attachments, may contain material that is confidential, privileged and/or attorney work product and is for the sole use of the intended recipient. Any review, reliance or distribution by others or forwarding without expressed permission is strictly prohibited. If you are not the intended recipient, please contact the sender and delete all copies.

To: Lin, Sharon[Lin.Sharon@epa.gov]
From: Arora, Asha@DTSC
Sent: Thur 4/16/2015 9:59:21 PM
Subject: FW: TTU PBR application SMR - Enforcement Confidential form EPA (2nd email)
Delta Tech Shell _ Martinez.pdf
PSC Industrial Outsourcing Shell Oil Martinez..pdf
PSC Industrial - Shell Oil Martinez amended.pdf

Hi Sharon,

Attached are TTU authorizations since last year at Shell Refinery.

Thank you

Asha

From: West, Clyde@DTSC
Sent: Thursday, April 16, 2015 1:44 PM
To: Arora, Asha@DTSC
Cc: Diebert, Donn@DTSC
Subject: RE: TTU PBR application SMR - Enforcement Confidential form EPA (2nd email)

Per your request, please see the attached and I have also include another TTU – Delta Tech.

Thanks…….

From: Arora, Asha@DTSC
Sent: Thursday, April 16, 2015 12:48 PM
To: West, Clyde@DTSC
Cc: Diebert, Donn@DTSC
Subject: RE: TTU PBR application SMR - Enforcement Confidential form EPA (2nd email)

EPA had asked Q for the TP and met with me on Tuesday and I recall seeing a document that showed that Shell informed the Contra Costa County that the TTU unit was going to operate longer. I will confirm with EPA and let them know of potential violation.

Did you approve their TTU notification or not?

Thanks

Asha

From: West, Clyde@DTSC
Sent: Thursday, April 16, 2015 12:43 PM
To: Arora, Asha@DTSC
Cc: Diebert, Donn@DTSC
Subject: RE: TTU PBR application SMR - Enforcement Confidential form EPA

Good afternoon Asha,

Federal EPA is asking??

There was a problem with their notification or the length of time a TTU may operate onsite. To simplify things, we asked them to withdraw their notification [we do not denied notifications]. Another company was authorized in June to do treatment at Shell.

Thanks……

From: Arora, Asha@DTSC
Sent: Thursday, April 16, 2015 12:22 PM
To: West, Clyde@DTSC
Subject: TTU PBR application SMR - Enforcement Confidential form EPA
Importance: High

Hi Clyde,

EPA wants to know about Shell TTU PBR application. Do you know the history of the attached application? The file seems to suggest the application was denied by DTSC. Please respond ASAP.

Thank you

Asha

Asha Arora

Senior Environmental Scientist (Specialist)

Department of Toxic Substances Control

Berkeley Office

(510) 540-3874

Asha.Arora@dtsc.ca.gov

Matthew Rodriquez
Secretary for
Environmental Protection

Department of Toxic Substances Control

Deborah O. Raphael, Director
1001 "I" Street
P.O. Box 806
Sacramento, California 95812-0806

Edmund G. Brown Jr.
Governor

January 6, 2014

Delta Tech Service, INC.
397 West Channel Road
Benicia, CA 94510
EPA ID: CAD980887202

TRANSPORTABLE TREATMENT UNIT (TTU) - SERIAL NUMBER: DTX25
PERMIT BY RULE SITE-SPECIFIC NOTIFICATION AND AUTHORIZATION TO OPERATE

Dear TTU Operator:

The Department of Toxic Substances Control (DTSC) has received your Transportable Treatment Unit (TTU) Permit by Rule Site-Specific Notification (DTSC Form 1197). This letter is to inform you that DTSC has found your notification to be complete and hereby authorizes you from January 8, 2014 through February 28, 2014 to operate the designated TTU at the following designated location:

Shell Oil Company
3485 Pacheco Blvd.
Martinez, California 94553
EPA ID#: CAD009164021

Please note that your authorization to operate is valid only for the dates and site location specified above and is subject to compliance with all applicable federal, State, and local laws and regulations. This authorization does not preclude DTSC, or any other regulatory agency with statutory authority, from inspecting the site and taking appropriate enforcement action, including fines and penalties. Please be advised that any misrepresentation or failure to fully disclose all relevant facts in your notification renders this authorization to operate null and void.

If you have any questions, please feel free to contact Clyde West at (916) 445 - 2959 or via email at Clyde.West@dtsc.ca.gov.

Printed on Recycled Paper

Sincerely,

Donn Diebert, P.E., Chief
Program Implementation Unit
Policy Implementation and Support Branch
Policy and Program Support Division
Department of Toxic Substances Control

cc: Mr. Mukul Agarwal
Enforcement and Emergency Response Program
Department of Toxic Substances Control
9211 Oakdale Avenue
Chatsworth, California 91311-6505

Ms. Maria Soria
Enforcement and Emergency Response Division
Department of Toxic Substances Control
700 Heinz Avenue, Building F, 2nd Floor
Berkeley, California 94710

Matthew Rodriquez
Secretary for
Environmental Protection

Department of Toxic Substances Control

Deborah O. Raphael, Director
1001 "I" Street
P.O. Box 806
Sacramento, California 95812-0806

Edmund G. Brown Jr.
Governor

October 28, 2014

PSC Industrial Outsourcing, LP
DBA Philip West Industrial Services
395 West Channel RD
Benicia, CA 94510

EPA ID #: CAR000084145

TRANSPORTABLE TREATMENT UNIT (TTU) - SERIAL NUMBER: AWC-003
PERMIT BY RULE SITE-SPECIFIC NOTIFICATION AND AUTHORIZATION TO OPERATE

Dear TTU Operator:

The Department of Toxic Substances Control (DTSC) has received your Transportable Treatment Unit (TTU) Permit by Rule Site-Specific Notification (DTSC Form 1197). This letter is to inform you that DTSC has found your notification to be complete and hereby authorizes you from October 30, 2014 through June 1, 2015 to operate the designated TTU at the following designated location:

Shell Oil Company
3485 Pacheco Blvd.
Martinez, California 94553
EPA ID#: CAD009164021

Please note that your authorization to operate is valid only for the dates and site location specified above and is subject to compliance with all applicable federal, State, and local laws and regulations. This authorization does not preclude DTSC, or any other regulatory agency with statutory authority, from inspecting the site and taking appropriate enforcement action, including fines and penalties. Please be advised that any misrepresentation or failure to fully disclose all relevant facts in your notification renders this authorization to operate null and void.

If you have any questions, please feel free to contact Clyde West at (916) 445 - 2959 or via email at Clyde.West@dtsc.ca.gov.

Printed on Recycled Paper

Sincerely,

Donn Diebert, P.E., Chief
Program Implementation Unit
Policy Implementation and Support Branch
Policy and Program Support Division
Hazardous Waste Management Program

cc: Ms. Maria Soria, Chief
Berkeley Enforcement and Oversight Branch
Enforcement and Emergency Response Division
Hazardous Waste Management Program
Department of Toxic Substances Control
700 Heinz Avenue, Building F, 2nd Floor
Berkeley, California 94710

Mr. Mukul Agarwal
Supervising Environmental Scientist
Chatsworth Enforcement Branch
Enforcement and Emergency Response Division
Hazardous Waste Management Program
Department of Toxic Substances Control
9211 Oakdale Avenue
Chatsworth, California 91311-6505

Mr. Clyde West
Environmental Scientist
Program Implementation Unit
Policy Implementation and Support Branch
Policy and Program Support Division
Hazardous Waste Management Program
Department of Toxic Substances Control
1001 I Street, 11th Floor
PO Box 806
Sacramento, California 95812-0806

Matthew Rodriquez
Secretary for
Environmental Protection

Department of Toxic Substances Control

Miriam Barcellona Ingenito
Acting Director
1001 "I" Street
P.O. Box 806
Sacramento, California 95812-0806

Edmund G. Brown Jr.
Governor

June 10, 2014

PSC Industrial Outsourcing, LP
DBA Philip West Industrial Services
1411 W. Gaylord Street
Long Beach, CA 90813

EPA ID #: CAL000395550

TRANSPORTABLE TREATMENT UNIT (TTU) - SERIAL NUMBER: AWC-003
PERMIT BY RULE SITE-SPECIFIC NOTIFICATION AND AUTHORIZATION

Dear TTU Operator:

The Department of Toxic Substances Control (DTSC) has received your Transportable Treatment Unit (TTU) Permit by Rule Site-Specific Notification (DTSC Form 1197). This letter is to inform you that DTSC has found your notification to be complete and hereby authorizes you from June 16, 2014 through October 30, 2014, to operate the designated TTU at the following designated location:

Shell Oil Company
3485 Pacheco Blvd.
Martinez, California 94553
EPA ID#: CAD009164021

Please note that your authorization to operate is valid only for the dates and site location specified above and is subject to compliance with all applicable federal, state, and local laws and regulations. This authorization does not preclude DTSC, or any other regulatory agency with statutory authority, from inspecting the site and taking appropriate enforcement action, including fines and penalties. Please be advised that any misrepresentation or failure to disclose fully all relevant facts in your notification renders this authorization to operate null and void.

Printed on Recycled Paper

If you have any questions, please feel free to contact Mr. Clyde West at (916) 445-2959 or via email at Clyde.West@dtsc.ca.gov.

Sincerely,

Donn Diebert, P.E., Chief
Program Implementation Unit
Policy Implementation and Support Branch
Policy and Program Support Division
Hazardous Waste Management Program

cc: Ms. Maria Soria, Chief
Berkeley Enforcement and Oversight Branch
Enforcement and Emergency Response Division
Hazardous Waste Management Program
Department of Toxic Substances Control
700 Heinz Avenue, Building F, 2nd Floor
Berkeley, California 94710

Mr. Mukul Agarwal
Supervising Environmental Scientist
Chatsworth Enforcement Branch
Enforcement and Emergency Response Division
Hazardous Waste Management Program
Department of Toxic Substances Control
9211 Oakdale Avenue
Chatsworth, California 91311-6505

Mr. Clyde West
Environmental Scientist
Program Implementation Unit
Policy Implementation and Support Branch
Policy and Program Support Division
Hazardous Waste Management Program
Department of Toxic Substances Control
1001 I Street, 11th Floor
PO Box 806
Sacramento, California 95812-0806

To: Lin, Sharon[Lin.Sharon@epa.gov]
Cc: Koch, Lori@DTSC[Lori.Koch@dtsc.ca.gov]
From: Ahmad, Waqar@DTSC
Sent: Thur 3/31/2016 12:46:44 AM
Subject: RE: Shell Martinez Refinery Permit
Shell_Final_Permit_04-15-08.pdf

Here is the copy of the current permit for Shell Martinez Refinery.

Waqar

From: Lin, Sharon [mailto:Lin.Sharon@epa.gov]
Sent: Wednesday, March 30, 2016 5:20 PM
To: Ahmad, Waqar@DTSC
Subject: Shell Martinez Refinery Permit

Hi, Waqar,

Could you email me the current permit for this facility (non BIF)? Attached is a copy of the permit which expired in 2005. I couldn't locate the current permit on Envirostor. Thanks.

sharon

California Environmental Protection Agency
Department of Toxic Substances Control

HAZARDOUS WASTE FACILITY PERMIT
Boiler and Industrial Furnace

Facility Name:
Shell Martinez Refinery
3485 Pacheco Boulevard
P.O. Box 711
Martinez, California 94553-0071

Owner Name:
Equilon Enterprises, LLC
P.O. Box 4453
Houston, TX 77210-4453

Operator Name:
Shell Oil Products US
P.O. Box 4453
Houston, TX 77210-4453

Permit Number: 07-BRK-12

Facility EPA ID Number: CAD 009164021

Effective Date of Permit:
May 21, 2008

Expiration Date of Permit:
May 20, 2018

Pursuant to California Health and Safety Code, section 25200, this Resource Conservation and Recovery Act (RCRA) - equivalent Hazardous Waste Facility Permit is hereby issued for the Shell Martinez Refinery.

The issuance of this Permit is subject to the terms and conditions set forth in Attachment A and the Part "B" Application (Operation Plan) dated, June 2007. Attachment A consists of 31 pages.

//original signed by//

Mohinder S. Sandhu, P.E., Chief
Standardized Permitting and Corrective Action Branch
Department of Toxic Substances Control

Date: April 15, 2008

Shell Martinez Refinery
3485 Pacheco Boulevard
P.O. Box 711
Martinez, CA 94553
EPA ID No. CAD 009164021

HAZARDOUS WASTE FACILITY PERMIT
BOILER AND INDUSTRIAL FURNACE

ATTACHMENT "A"

TABLE OF CONTENTS

Page

I. DEFINITIONS 4

II. DESCRIPTION OF THE FACILITY AND OWNERSHIP 5

1. OWNER OF FACILITY 5
2. OWNER OF REAL PROPERTY 5
3. OPERATOR OF FACILITY 5
4. LOCATION 5
5. DESCRIPTION OF FACILITY OPERATIONS 5
6. FACILITY HISTORY 6
7. FACILITY SIZE AND TYPE FOR FEE PURPOSES 7

III. GENERAL CONDITIONS 8

1. PERMIT APPLICATION DOCUMENTS 8
2. EFFECT OF PERMIT 8
3. COMPLIANCE WITH CALIFORNIA ENVIRONMENTAL QUALITY ACT (CEQA) 10
4. ANNUAL HAZARDOUS WASTE REDUCTION AND MINIMIZATION CERTIFICATION 10
5. ACCESS 10

IV. PERMITTED UNITS AND ACTIVITIES 11
1. UNIT #1 TANK 12038 11
2. UNIT #2 CARBON MONOXIDE BOILERS (CO BOILER 1, 2, AND 3) 14

V. SPECIAL CONDITIONS 22

VI. CORRECTIVE ACTION FOR SOLID WASTE MANAGEMENT UNITS 24

TABLES

1. PERMITTED WASTE STREAMS 13

2. CO BOILERS AUTOMATIC WASTE FEED CUTOFF LIMITS.....21

FIGURES

1. FACILITY LAYOUT (SHELL MARTINEZ REFINERY).....26

2. PERMITTED UNIT #1 – TANK 12038.....27

3. PERMITTED UNIT #2 – CO BOILERS 1, 2, AND 3.....28

4. ETP-1 BIOTREATER 29

5. PROCESS FLOW DIAGRAM FOR PERMITTED UNIT #1 – TANK 12038...30

6. PROCESS FLOW DIAGRAM FOR PERMITTED UNIT #2 – CO BOILERS .31

PART I. DEFINITIONS

All terms used in this Permit shall have the same meaning as those terms have in the California Health and Safety Code, division 20, chapter 6.5 and California Code of Regulations, title 22, division 4.5, unless expressly provided otherwise by this Permit.

1. **"DTSC"** as used in this Permit means the California Department of Toxic Substances Control.

2. **"Facility"** as used in this Permit means all contiguous land and structures, other appurtenances, and improvements on the land used for the treatment, transfer, storage, resource recovery, disposal or recycling of hazardous waste. A hazardous waste facility may consist of one or more treatment, transfer, storage, resource recovery, disposal or recycling operational units or combinations of these units.

   For the purpose of implementing corrective action under California Code of Regulations, title 22, division 4.5, a hazardous waste facility includes all contiguous property under the control of the owner or operator required to implement corrective action.

3. **"Permittee"** as used in this Permit means the Owner and Operator.

PART II. DESCRIPTION OF THE FACILITY AND OWNERSHIP

1. OWNER OF FACILITY:

The facility owner is Equilon Enterprises, LLC (hereafter "owner").

2. OWNER OF REAL PROPERTY:

The real property owner is Equilon Enterprises, LLC.

3. OPERATOR OF FACILITY:

The facility operator is Shell Oil Products US (hereafter "operator").

4. LOCATION:

The Shell Martinez Refinery facility ("Facility"), is located at 3485 Pacheco Boulevard in Martinez, California. The Facility encompasses approximately 1000 acres of land on the south shore of the Carquinez Straits (Figure 1). The Facility has numerous county Assessor's Parcel numbers. The CO Boilers and Tank 12038, which are the specific units identified in this Permit, are located on the parcels shown below.

CO Boilers: Latitude 38°0'37" / Longitude 122° 6' 51"
Township 2 North, Range 2 West, Section 17
Mt. Diablo Base and Meridian
Parcel No. 378-110-013-0

Tank 12038: Latitude 38° 1' 21" / Longitude 122° 7' 8"
Township 2 North, Range 2 West, Section 18
Mt. Diablo Base and Meridian
Parcel No. 378-010-029-7

5. DESCRIPTION OF FACILITY OPERATIONS:

The Facility is an oil refining complex on approximately 1,000 acres of land. The Facility began its operations at this location in 1914. Its operations include light oil processing which yields primarily gasoline, diesel and aviation turbine fuels, and heavy oil processing, which yields marine fuel oils, coke and asphalt products. The Facility is permitted to manage hazardous wastes in three carbon monoxide boilers (CO Boilers 1, 2, and 3) and a storage tank (Tank 12038) (Figure 1). Another unit, the Effluent Treatment Plant No. 1 (ETP-1, aka: biotreater), was previously authorized in DTSC's 1995 Permit to store and treat hazardous wastewaters, but now is not authorized to accept hazardous waste. This biotreater is a 1.4-acre,

unlined, surface impoundment (Figure 4). DTSC has allowed the closure of ETP-1 to be delayed until it ceases to operate, at which time the approved closure plan specified in the Part B application, listed in Part III.1 of this Permit, shall be implemented.

6. FACILITY HISTORY:

On September 30, 1988, predecessors to the Permittee submitted one application to the U.S. Environmental Protection Agency (U.S. EPA) and the California Department of Health Services, Toxic Substances Control Program (the predecessor to DTSC), for permits to operate a hazardous waste facility. (Shell applied for both federal and State permits).

a) On May 8, 1990, U.S. EPA issued the Permittee a Resource Conservation and Recovery Act (RCRA) Hazardous Waste Facility Permit (RCRA permit) for the management of hazardous wastes. The RCRA permit became effective on June 30, 1990 and expired on June 30, 1995. The hazardous waste management units included in the RCRA permit were the RM-17 Incinerator, CO Boilers Nos. 1, 2, and 3, Tank 12038 and Vessel 482. This permit was based on Part B application (September 1988), the RM-17 Incinerator Trial Burn Report (June 5, 1989) and CO Boiler No. 1 Trial Burn Report (April 21, 1989).

b) On August 1, 1992, U.S. EPA granted authorization to DTSC to enforce the RCRA permit.

c) On January 16, 1995, the Permittee applied for renewal of the RCRA permit.

d) DTSC renewed the RCRA Permit effective December 30, 1995. The permit was based on a Part B application (dated May 1995), including Trial Burn Reports for CO Boiler No. 2 (November 1991), RM-17 Incinerator (November 1993) and CO Boiler No. 3 (December 1993).

e) On December 27, 1996, the RM-17 incinerator was closed and it is no longer a permitted unit.

f) On April 3, 1997, the Vessel 482 hazardous waste storage tank was closed and it is no longer a permitted unit.

g) On September 17, 1997, the Facility's ownership changed from Shell Oil Company – Martinez Manufacturing Complex to Shell Martinez Refining Company.

h) Effective July 1, 1998, Equilon Enterprises LLC became owner and operator of the Shell Martinez Refining Company, which was renamed "Martinez Refining Company, a Division of Equilon Enterprises LLC". On June 15, 2000, Shell Oil Company 1) submitted a revised Part B Application that changed the name of the Facility and operator from Shell Martinez Refining Company to Martinez Refining Company, a Division of Equilon Enterprises LLC; 2) revised the waste analysis plan to reflect only treatment of non-hazardous wastewaters in the biotreater unit (ETP-1) ; and 3) revised the operating log and inspection requirements of the biotreater unit because hazardous wastes were no longer treated in this unit.

i) On June 14, 2002 Martinez Refining Company changed its name to Shell Oil Products US, Martinez Refinery.

j) On August 21, 2003 DTSC approved a Class 2 permit modification to allow: 1) the delayed closure of the Effluent Treatment Plant No. 1 (ETP-1, aka: biotreater); and 2) the biotreater unit to handle non-hazardous waste streams only.

k) On February 28, 2005, Shell submitted its Part "A" application for its permit renewal and on March 1, 2005 Shell submitted its Part "B" Application, which was revised in June 2007.

7. FACILITY SIZE AND TYPE FOR FEE PURPOSES:

The Facility is categorized as a large treatment facility for the purpose of assessing fees in accordance with Health and Safety Code section 25205.1 and for purposes of Health and Safety Code sections 25205.2 and 25205.19. The Facility treats hazardous waste at treatment capacity of about 5,400 tons per month. The Facility has a tank that stores about 200 tons of hazardous waste.

PART III. GENERAL CONDITIONS

1. PERMIT APPLICATION DOCUMENTS:

The Part "A" Application dated February 28, 2005 and the Part "B" Application, Volumes I, II, and III, submitted on March 1, 2005 and subsequently revised in June 2007 and titled Part B Application, Shell Oil Products US, Martinez Refinery are hereby made a part of this Permit by reference. The following documents are made part of the Part "B" Application:

a. Part B Application, Shell Oil Products US, Martinez Refinery, 3485 Pacheco Boulevard, Martinez, California 94553, Originally Submitted – March 2005, Last Revision – June 2007, Volume 1
b. Part B Application, Shell Oil Products US, Martinez Refinery, 3485 Pacheco Boulevard, Martinez, California 94553, Originally Submitted – March 2005, Last Revision – June 2007, Volume 2
c. Part B Application, Shell Oil Products US, Martinez Refinery, 3485 Pacheco Boulevard, Martinez, California 94553, Originally Submitted – March 2005, Last Revision – June 2007, Volume 3
d. Trial Burn Report for CO Boiler No. 2, Condition 3 Retest, Final Report, ENSR Corporation, March 2007
e. Trial Burn DRE Retest Plan for CO Boiler No. 2, ENSR Corporation, September 2006
f. Trial Burn Report for CO Boiler No. 2, Volume I of II, Final Report, ENSR Corporation, September 2006
g. Trial Burn Report for CO Boiler No. 2, Volume II of II, Final Report, ENSR Corporation, September 2006
h. Trial Burn Plan for CO Boiler Units 1, 2, and 3, Revision 2, ENSR Corporation, November 2005, Shell Oil Products US, Shell Martinez Refinery, Martinez, California, CAD 009164021.
i. Health Risk Assessment for the CO Boilers at the Shell Martinez Refinery, Martinez, California, ENSR Corporation, October 2006
j. Protocol for the CO Boiler Health Risk Assessment, Revision 1, November 2005 (revised from April 2005)
k. Seismic Assessment of the CO Boilers and Tank T-12038 at the Shell Martinez Refinery, March 2007
l. Geotechnical Report in Support of Seismic Assessment, Hazardous Waste Facility, Part B Permit Renewal CO Boilers and Biotreater Tank 12038, Shell Martinez Refinery, Martinez, California, August 30, 2006

2. EFFECT OF PERMIT

(a) The Permittee shall comply with the terms and conditions of this Permit and the provisions of the Health and Safety Code and California Code of

Regulations, title 22, division 4.5. The issuance of this Permit by DTSC does not release the Permittee from any liability or duty imposed by federal or state statutes or regulations or local ordinances, except the obligation to obtain this Permit. The Permittee shall obtain the permits required by other governmental agencies, including but not limited to, those required by the applicable land use planning, zoning, hazardous waste, air quality, water quality, and solid waste management laws for the construction and/or operation of the Facility.

(b) The Permittee is permitted to treat and store hazardous wastes in accordance with the terms and conditions of this Permit. Any management of hazardous wastes not specifically authorized in this Permit is strictly prohibited.

(c) Compliance with the terms and conditions of this Permit does not constitute a defense to any action brought under any other law governing protection of public health or the environment, including, but not limited to, one brought for any imminent and substantial endangerment to human health or the environment.

(d) DTSC's issuance of this Permit does not prevent DTSC from adopting or amending regulations that impose additional or more stringent requirements than those in existence at the time this Permit is issued and does not prevent the enforcement of these requirements against the Permittee.

(e) Failure to comply with any term or condition set forth in the Permit in the time or manner specified herein will subject the Permittee to possible enforcement action including but not limited to penalties pursuant to Health and Safety Code section 25187.

(f) Failure to submit any information required in connection with the Permit, or falsification and/or misrepresentation of any submitted information, is grounds for revocation of this Permit (Cal. Code Regs., tit. 22, §66270.43).

(g) In case of conflicts between the Operation Plan and the Permit, the Permit conditions take precedence.

(h) This Permit includes and incorporates by reference any conditions of waste discharge requirements issued to the Facility by the State Water Resources Control Board or any of the California Regional Water Quality Control Boards and any conditions imposed pursuant to section 13227 of the Water Code.

3. COMPLIANCE WITH THE CALIFORNIA ENVIRONMENTAL QUALITY ACT (CEQA)

DTSC has prepared an Initial Study and Negative Declaration for this permit renewal project in accordance with the requirements of Public Resources Code section 21000 et seq. and the CEQA Guidelines, section 15070 et seq. of California Code of Regulations, title 14.

4. ANNUAL WASTE MINIMIZATION REDUCTION AND MINIMIZATION CERTIFICATION

The Permittee shall certify annually that it has a hazardous waste reduction and minimization program and method in place and shall keep the annual certification as part of its Operating Record in accordance with California Code of Regulations, title 22, section 66264.73(b)(9).

5. ACCESS

a) DTSC, its contractors, employees, agents, and/or any United State Environmental Protection Agency representatives are authorized to enter and freely move about the Facility for the purposes of interviewing Facility personnel and contractors; inspecting records, operating logs, and contracts relating to the Facility; reviewing progress of the Permittee in carrying out the terms of Part VI of the Permit; conducting such testing, sampling, or monitoring as DTSC deems necessary; using a camera, sound recording, or other documentary-type equipment; verifying the reports and data submitted to DTSC by the Permittee; or confirming any other aspect of compliance with this Permit, Health and Safety Code, division 20, chapter 6.5, and California Code of Regulations, title 22, division 4.5. The Permittee shall provide DTSC and its representatives access at all reasonable times to the Facility and any other property to which access is required for implementation of any provision of this Permit, Health and Safety Code, division 20, chapter 6.5, and California Code of Regulations, title 22, division 4.5, and shall allow such persons to inspect and copy all records, files, photographs, documents, including all sampling and monitoring data, that pertain to work undertaken pursuant to the entire Permit or undertake any other activity necessary to determine compliance with applicable requirements.

b) Nothing in this Permit shall limit or otherwise affect DTSC's right to access and entry pursuant to any applicable State or federal laws and regulations.

PART IV. PERMITTED UNITS AND ACTIVITIES

This Permit authorizes operation only of the Facility units and activities listed below. The Permittee shall not treat, store or otherwise manage hazardous waste in any unit other than those specified in this Part IV. Any modifications to a unit or activity authorized by this Permit require the written approval of DTSC in accordance with the permit modification procedures set forth in California Code of Regulations, title 22, division 4.5.

UNIT #1 - TANK 12038:

LOCATION: This tank is located in the refinery's Effluent Treatment Plant area, north-west of the Marina Vista.

ACTIVITY TYPE: Storage of waste biosolids and Dissolved Nitrogen Flotation (DNF) Float. The mixture of biosolids and DNF Float is called biosludge.

ACTIVITY DESCRIPTION:

This tank is used to store the hazardous waste liquid stream that is fed to the CO boilers (Figure 2). The process flow diagram for this permitted unit is provided in Figure 5 of this Permit.

PHYSICAL DESCRIPTION:

Tank 12038 is an aboveground tank made of carbon steel with a phenolic coating. It is a double wall and double bottom tank with a cone roof. The tank is 20 feet in diameter and 20 feet high, has a capacity of 47,754 gallons, and is nitrogen-blanketed. The interior wall and bottom of the Tank 12038 primary shell are lined with a cross-linked epoxy-phenolic coating. The tank was built according to American Petroleum Institute (API) 650 Standard. The secondary shell serves as the secondary containment for the tank. The interstitial space between the two shells is equipped with a pressure/vacuum relief valve. The interstitial space is equipped with leak detectors and a continuous monitor to detect leaks from the primary tank with alarms in the Effluent Treatment Plant control center. Tank 12038 is equipped with an overfill prevention system.

MAXIMUM CAPACITY: 47,750 gallons.

WASTE TYPE: See Table 1 for detailed description.

Waste Stream #1 – Dissolved nitrogen flotation (DNF) solids (DAF Float)
Waste Stream #2 – Waste biosludge
Waste Stream #3 – Waste biosolids

WASTE SOURCES: See Table 1 for a detailed description.

RCRA HAZARDOUS WASTE CODES: See Table 1 for detailed description.

CALIFORNIA HAZARDOUS WASTE CODES: See Table 1 for detailed description.

UNIT SPECIFIC CONDITIONS:

1. The Permittee shall manage hazardous waste in Tank 12038 in accordance with the requirements of the California Code of Regulations, title 22, sections 66264.190 to 66264.199.

2. Tank System Design

   a. The Permittee shall maintain the secondary containment system in accordance with the detailed design plans and descriptions contained in the Approved Part B.

   b. To ensure sufficient shell strength, the Permittee shall maintain the shell thickness specified in the approved Part B.

3. Operating Requirements

   a. The Permittee shall not place treatment reagents in the tank system except for flow improvers to enhance pumpability and odor suppressors to control hydrogen sulfide.

   b. The Permittee shall prevent spills and overflows from the tank or containment systems using the methods described in the Approved Part B.

4. Inspection Schedules and Procedures

   a. The Permittee shall inspect the tank systems in accordance with the Approved Part B and shall document such inspection in the Facility operating record.

   b. The Permittee shall assess the condition of the tank according to the schedule and procedures provided in the Approved Part B.

   c. The Permittee shall visually inspect the above ground piping system that transfers hazardous waste to and from Tank 12038 for leaks on a daily basis.

5. Response to Leaks or Spills

In the event of a leak or a spill from the tank system, from a secondary containment system, or if a system becomes unfit for continued use, the Permittee shall follow the procedures specified in the Approved Part B and the notification and reporting requirements under California Code of Regulations, title 22, section 66264.196(b)(5).

6. Closure

At closure of the tank systems, the Permittee shall follow the procedures in the Approved Part B.

AIR EMISSION STANDARDS:

Tank 12038 is subject to the California Code of Regulations, title 22, chapter 14, article 28.5 Air Emission Standards for Tanks, Surface Impoundments, and Containers.

TABLE 1: PERMITTED WASTE STREAMS

Stream Number	Waste Stream Description	EPA Waste Code No.	California Waste Code No.*
1	Dissolved Nitrogen flotation (DNF) solids	K048	222
2	Waste Biosludge	K048	222
3	Waste Biosolids	Not applicable	Not applicable

Note: Waste Biosolids are not classified as hazardous waste under federal and State laws and regulations.

UNIT # 2 - CARBON MONOXIDE BOILERS (CO Boiler 1, 2, and 3):

LOCATION: These boilers are located within the Utilities Plant located in the central part of the Facility.

ACTIVITY TYPE: Treatment of dissolved nitrogen flotation (DNF) solids, waste biosolids, and waste biosludge.

ACTIVITY DESCRIPTION:

The CO Boilers burn DNF solids, hazardous waste biosludge, non-hazardous waste biosolids and fuels. CO Boilers generate steam that is used to operate the refinery. These boilers operate on multiple feeds with the primary fuel being a process gas called catalytic cracker unit regenerator off-gas (Figure 3). Other fuels include Flexicoker gas, refinery fuel gas, and biosludge. Biosludge is the mixture of DNF float and waste biosolids. The Permittee uses nitrogen as opposed to air in its dissolved flotation units. A process flow diagram for this permitted unit is shown in Figure 6 of this Permit.

PHYSICAL DESCRIPTION:

Each CO Boiler system consists of the following components: firebox, draft fan, flue gas duct, electrostatic precipitator (ESP), urea injection system, conveyor, dust hopper, sling bag, stack and pumps. Each boiler is 90 feet in diameter and 220 feet high.

The firebox is made of carbon steel and is 12.9 ft high. It has four fuel burners, which are the dual-fluid type. Draft fans are designed to provide a flow rate of 105,000 actual cubic feet per minutes and a discharge pressure of 15 inches water column. The flue gas duct is made of carbon steel lined with refractory. Electrostatic Precipitators (SP-75, SP-76, and SP-77) are the plate and wire type. The urea injection system is comprised of a 54,000-gallon tank and a pump to provide a flow of 5 to 180 gallons per hour. The conveyor is a screw type. There are eight dust hoppers per boiler. The stack is constructed of carbon steel and has an outer diameter of 8 feet.

MAXIMUM CAPACITY:

Biosludge Flow: 12.07 gallons per minute (gpm), hourly rolling average (HRA), for each individual CO Boiler

Biosludge Flow: 30 gpm, hourly rolling average (HRA), for all three (3) CO Boilers combined

WASTE TYPES: See Table 1 for details.

Waste Stream #1 – DNF solids (DAF Float)

Waste Stream #2 – Waste biosludge
Waste Stream #3 – Waste biosolids

WASTE SOURCE: See Table 1 for details.

In addition to the wastestreams shown in Table 1, the CO Boilers burn the following refinery process streams, which are not regulated by this Permit:

1. Catalytic Cracker Unit Regenerator Off-gas
2. Flexicoker gas
3. Fuel gas

RCRA HAZARDOUS WASTE CODES: See Table 1.

CALIFORNIA HAZARDOUS WASTE CODES: See Table 1.

UNIT SPECIFIC CONDITIONS:

1. Identification Criteria for Permitted and Prohibited Waste

   a. The Permittee may incinerate waste streams shown in Table 1 only if they meet the following criteria:

      (1) The average ash content of the biosludge on wet basis shall be no greater than 13.5% by weight measured on an annual basis.

      (2) The average total chloride and total chlorine content of the wastes shall be no greater than 1% by weight measured on an annual basis.

      (3) Table 1 wastes shall always be fed in conjunction with auxiliary fuel.

   b. Throughout operation, the Permittee shall conduct analyses in accordance with Part V.3 of this Permit to ensure that the criteria above are met.

   c. Residue generated from burning of Table 1 wastes in the CO Boilers shall be managed as hazardous waste according to California Code of Regulations, title 22.

2. Instrumentation and Operational Performance Requirements

a. The Permittee shall maintain the CO Boilers so that when operated, in accordance with the operating requirements specified in this Permit, they shall meet the following performance standards:

(1) Each CO Boiler shall achieve a destruction-and-removal efficiency (DRE) of 99.99 percent for the principal organic hazardous constituents (POHCs) for waste feed streams. The DRE value shall be determined using the method specified in California Code of Regulations, title 22, section 66264.343. Monochlorobenzene shall be identified as POHC for DNF Float.

(2) The Permittee shall control hydrogen chloride (HCl) and chlorine (Cl_2) emissions, so that the rate of emissions from all CO Boilers is no greater than 18.3 grams per second (g/s) for HCl and 1.05 g/s for Cl_2.

(3) The CO Boilers shall not emit particulate matter in excess of 0.08 grains per dry standard cubic foot after correction to a stack gas concentration of seven percent (7%) oxygen, using procedures prescribed in Title 40, Code of Federal Regulations (40 CFR) Part 60, Appendix A, methods 1 through 5; and Appendix IX of Chapter 16, California Code of Regulations, title 22.

(4) The Permittee shall control the emissions of dioxins and furans so that the ratio of the predicted maximum annual average ground level concentration (based on the combined emissions from all three boilers) of 2,3,7,8-TCDD equivalents to the risk-specific dose for 2,3,7,8-TCDD provided in Appendix V of Chapter 16, California Code of Regulations, title 22 shall not exceed 1.0.

(5) The mass emission rates of toxic metals from each CO Boiler shall not exceed the following limits:

Metal	Emission Rate (g/s)	Metal	Emission Rate (g/s)
Antimony	7.60×10^{-2}	Chromium	6.00×10^{-4}
Arsenic	6.77×10^{-5}	Lead	7.40×10^{-2}
Barium	6.00×10^{-1}	Mercury	5.60×10^{-2}
Beryllium	6.77×10^{-5}	Silver	5.10×10^{-1}
Cadmium	4.60×10^{-4}	Thallium	7.60×10^{-2}

b. The Permittee shall feed wastes to the CO Boilers only under the following conditions:

(1) WASTE LIQUID FEED RATE –

Waste shall only be fed in the firebox through the liquid waste burners at the following limits:

i. An average waste liquid feed rate of 12.07 gallons per minute (gpm) as measured on an hourly rolling average basis shall not be exceeded for each CO boiler.

ii. A maximum waste liquid feed rate (bio-sludge) of 30 gpm, measured on an hourly rolling average shall not be exceeded for all three CO Boilers combined.

(2) STACK GAS CO – The stack gas concentration of carbon monoxide (CO) shall not exceed 100 parts per million by volume (ppmv) measured on an hourly rolling average basis (i.e., over any 60 minute period), continuously corrected to seven percent (7%) oxygen, dry gas basis.

(3) FIREBOX TEMPERATURE – The firebox temperature shall be at or above 1599 ^{o}F measured on an instantaneous basis.

(4) COMBUSTION GAS FLOW RATE – The combustion gas flow rate shall be no greater than 154,400 standard cubic feet per minute (scfm) measured on an instantaneous basis.

(5) FIREBOX PRESSURE – The firebox pressure shall be maintained at a positive pressure not to exceed 5.91 inches water column (w.c.) measured on an hourly rolling average basis.

(6) DIFFERENTIAL ATOMIZATION FLUID PRESSURE BETWEEN ATOMIZING FLUID AND THE WASTE FEED - The differential atomization fluid pressure between atomizing fluid and the waste feed shall be no less than 50.0 pounds per squared inch gauge (psig) measured on an instantaneous basis.

(7) ESP POWER - The power to the electrostatic precipitator (ESP) for each boiler shall be maintained at no less than 31.2 kilovolt ampere (kVA) measured on an instantaneous basis.

c. To ensure compliance with the performance standards, DTSC may require modifications or revocation and re-issuance of the permit pursuant to California Code of Regulations, title 22, section 66270.41.

3. Inspection and Monitoring Requirements

a. The Permittee shall follow the procedures for inspecting the CO Boilers and associated equipment in accordance with the Approved Part B.

b. The Permittee shall ensure proper operation of all monitoring devices by following the inspection, maintenance, and calibration procedures contained in the Approved Part B.

c. The Permittee shall ensure that strip charts or other instruments are legible and instrument readings are clearly visible. The strip chart scale must be wide enough to avoid off-scale readings for determining compliance with specified permit limits.

d. Upon request of DTSC, the Permittee shall perform sampling and analysis of the waste and exhaust emissions to verify that the operating requirements established in this Permit achieve the performance standards.

4. Waste Feed Cutoff Requirements

a. The Permittee shall maintain the Automatic Waste Feed Cut-off (AWFCO) system to automatically cut off the hazardous waste feed to the CO Boilers at the limits specified in Table 2 of this permit.

(1) Hazardous wastes shall be fed to the CO Boilers only when all instruments required by this condition are on line and operating properly.

(2) At a minimum, equipment shall be maintained and tested at the frequencies stipulated in Table 2 of this permit. Testing of the AWFCO shall be conducted according to the operating procedures in the Approved Part B.

b. In the event that the AWFCO is triggered, the Permittee shall comply with the following:

(1) Confirm hazardous waste feed is shut off.

(2) Maintain the minimum firebox temperature while hazardous waste remains in the combustion chamber,

(3) Continue to route exhaust gas to the air pollution control system operated in accordance with this Permit while hazardous waste remains in the combustion chamber, and

(4) Continue to monitor the operating parameters and do not restart the hazardous waste feed until the levels of those parameters comply with the limits specified in Table 2 of this Permit.

c. In case of a malfunction of the AWFCO system, the Permittee shall immediately cease feeding hazardous waste to that CO Boiler. The Permittee shall not restart the hazardous waste feed into the CO Boiler until the problem causing the malfunction has been located and corrected.

d. The Permittee may temporarily deactivate the waste feed cutoff system for only the Carbon Monoxide and Oxygen analyzers while continuing to feed waste to a CO boiler only as necessary while the analyzers are being calibrated. The operating record shall contain the time a cut-off is deactivated and the time when the analyzers are reactivated along with the identification of the person(s) taking the action. The Permittee shall follow the procedures described in the Approved Part B Application in conducting and documenting the deactivation and reactivation of the AWFCO system.

e. The Permittee may temporarily bypass the AWFCO to change the thermocouple selector switch setting to verify firebox temperature. The procedures described in the approved Part B shall be followed in conducting and documenting the bypass/reactivation of the AWFCO.

f. The Permittee shall record in the operating record the date and time of all AWFCO's, including the triggering parameters, reason for the cut-off, and corrective actions taken. The Permittee shall also record all failures of the AWFCO system to function properly and corrective actions taken.

5. Trial Burn:

a. The Permittee shall conduct a trial burn pursuant to a DTSC-approved trial burn plan and requirements specified in California Code of Regulations, title 22, section, 66266.102 (e)(6)(D), to demonstrate conformance with the standards specified in California Code of Regulations, title 22, sections 66266.104 through 66266.107. At least

twenty four (24) months prior to the expiration of the Permit, the Permittee shall submit to DTSC for review and approval a trial burn plan as required under California Code of Regulations, title 22, section 66270.66 (c).
The principal organic hazardous constituent (POHC) as defined in California Code of Regulations, title 22, section 66266.104 (a)(2) for which DRE (destruction and removal efficiency) shall be determined for the CO Boilers shall be monochlorobenzene. Additional or different POHCs may be selected if DTSC determines it is appropriate to do so.

b. The Permittee shall complete a trial burn for CO Boiler No. 1 or 3 within nine (9) months after DTSC's approval of the trial burn plan pursuant to section 5.a. above. A trial burn shall consist of one or more operating modes that the Permittee determines essential to operate under and shall demonstrate compliance over the full range of desired operating modes. A minimum of three (3) valid test runs shall be conducted at each operating mode and shall demonstrate compliance with the performance standards for CO Boiler No. 1 or 3 (whichever is the subject of the trial burn) specified in Table 2 of this Permit and any other applicable standards promulgated in statutes or regulations.

c. All data collected during any trial burn shall be submitted to DTSC following completion of the trial burn. The Permittee shall submit to DTSC a certification that the trial burn has been carried out in accordance with the approved trial burn plan, and shall submit the results of all the determinations as required in California Code of Regulations, title 22, sections 66270.66(c - f). This submission shall be made within ninety (90) days of completion of the trial burn. All submissions shall be certified on behalf of the Permittee by the signature of the person authorized to sign a permit application or a report under California Code of Regulations, title 22, section 66270.

6. Closure

The Permittee must follow the procedures in the Closure Plan in the Approved Part B Application for closure of the CO Boilers.

7. Recordkeeping

The Permittee shall record and maintain, in the operating record, all monitoring and inspection data compiled for the CO Boilers.

8. Risk Assessment

At any time during the life of this Permit, DTSC may require that the risk assessments be updated in order to incorporate new DTSC or USEPA standards, guidance, and/or to evaluate new emission rates measured as a result of a new trial burn.

TABLE 2: CO BOILERS AUTOMATIC WASTE FEED CUTOFF LIMITS

Parameter	Cut-off Limits	Measuring Basis	Test frequency
Bio-sludge Flow	Greater than 12.07 gpm	Hourly rolling average (HRA) for each individual CO Boiler	Monthly
Bio-sludge Flow	Greater than 30 gpm	HRA for three CO Boilers combined	None
Stack Gas CO	Greater than 100 ppmv, corrected to 7% oxygen	HRA	Monthly
Firebox Temperature	Less than 1599 °F	Instantaneous	Monthly
Firebox Pressure	Greater than 5.91 inch w.c.	HRA	Monthly
Combustion Gas Flow Rate	Greater than 154,400 scfm (calculated).	Instantaneous	Monthly
ESP Power	Less than 31.2 kVA	Instantaneous	Monthly
All of the above	If any instrument required for automatic waste feed cut-off is not operational, or if instrumental span is exceeded	None	None

PART V. SPECIAL CONDITIONS

1. The Permittee shall not receive any offsite waste for treatment, storage, or disposal, unless approved by DTSC.

2. The Permittee shall only receive, store or treat hazardous waste specified in Table 1. The Permittee shall not treat, store or otherwise manage hazardous waste in any unit other than the permitted units specified in Part IV of this Permit.

3. The Permittee shall follow the waste analysis procedures described in the Approved Part B.

4. The Permittee shall verify the analysis of each waste liquid waste feed stream annually as part of its quality assurance program, in accordance with Test Methods for Evaluating Solid Waste: Physical/Chemical Methods, EPA publication SW-846, or equivalent methods approved by DTSC. At a minimum, the Permittee shall maintain proper functional instruments, use approved sampling and analytical methods, verify the validity of sampling and analytical procedures, and perform correct calculations. If the Permittee uses a contract laboratory to perform analyses, then the Permittee shall inform the laboratory in writing that it must operate under the waste analysis conditions set forth in this permit.

5. Special Conditions That Apply to the Effluent Treatment Plant No. 1 (ETP-1 Biotreater):

   a. The Permittee shall not accept, store, treat or otherwise manage hazardous waste in the ETP-1 Biotreater.

   b. The Permittee shall continue groundwater monitoring for the ETP-1 Biotreater pursuant to the San Francisco Bay Regional Water Quality Control Board (RWQCB) Order 95-234 and any amendments, modifications or successors to that order.

   c. The Permittee shall continue to submit "The Groundwater Boundary Control Capture Verification Modeling Report" to DTSC at the same frequency required by SFB-RWQCB Order 95-234. This report shall include a section that summarizes the activities that took place during the year as a result of recommendations made in the prior report.

d. The Permittee shall notify DTSC in writing at least one hundred and eighty (180) days prior to the date on which the Permittee expects to begin closure of the ETP-1 Biotreater. Within ninety (90) days after receiving a notification, DTSC may review the closure plan to determine whether any factor has significantly changed since a prior review was undertaken, or determine whether the plan is otherwise adequate or inadequate, and may prescribe additional requirements or request modification to the plan. Permittee shall complete closure of this unit, in accordance with the closure plan in the Approved Part B Application, within one hundred and eighty (180) days after the unit ceases to operate. The Permittee shall submit the closure certification report for this unit to DTSC within sixty (60) days of completion of closure.

6. The Permittee shall amend the Operation Plan to include an Appendix 1 (List of Parcel Numbers for the Entire Site) and submit the amendment to DTSC for review and approval within thirty (30) days of the effective date of the Permit.

PART VI. CORRECTIVE ACTION FOR SOLID WASTE MANAGEMENT UNITS

1. The Permittee is conducting corrective action at the Facility under the oversight of the San Francisco Bay Regional Water Quality Control Board (RWQCB), Order 95-234 (including any modifications) as approved by the RWQCB in 1995. Under SB 1082 (Calderon 1993), the RWQCB has been designated as the lead agency to oversee corrective action at the Facility except for the areas at Tank 12038, the three CO Boilers, and ETP-1 where no corrective action is required Tank 12038 is identified as SWMU 4.47, and the CO Boilers SWMUs 4.49 through 4.52.

2. In the event the Permittee identifies an immediate or potential threat to human health and/or the environment, discovers new releases of hazardous waste and/or hazardous constituents, or discovers new Solid Waste Management Units (SWMUs) not previously identified, the Permittee shall notify DTSC and the RWQCB orally with twenty-four (24) hours of discovery and notify DTSC in writing within ten (10) days of such discovery summarizing the findings including the immediacy and magnitude of any potential threat to human health and/or the environment.

3. DTSC may require the Permittee to investigate, mitigate and/or take other applicable action to address any immediate or potential threats to human health and/or the environment and newly identified releases of hazardous waste and/or hazardous constituents. For newly identified SWMUs, the Permittee is required to conduct corrective action. Corrective action will be carried out either under a Corrective Action Consent Agreement or Unilateral Corrective Action Order pursuant to Health and Safety Code, Section 25187.

4. To the extent that work being performed pursuant to Part VI of this Permit must be done on property not owned or controlled by the Permittee, the Permittee shall use its best efforts to obtain access agreements necessary to complete work required by this Part of the Permit from the present owner(s) of such property within 30 days of approval of any workplan for which access is required. "Best efforts" as used in this paragraph shall include, at a minimum, a certified letter from the Permittee to the present owner(s) of such property requesting access agreement(s) to allow the Permittee and DTSC and its authorized representatives access to such property and the payment of reasonable sums of money in consideration of granting access. The Permittee shall provide DTSC with a copy of any access agreement(s). In the event that agreements for the access are not obtained within 30 days of approval of any workplan for which access is required, or of the date that the need for access becomes known to the Permittee, the Permittee shall notify DTSC in writing within 14 days thereafter regarding both efforts undertaken to obtain access and its failure to obtain such agreements. In the event DTSC obtains access, the Permittee shall undertake

approved work on such property. If there is any conflict between this permit condition on access and the access requirements in any agreement entered into between DTSC and the Permittee, this permit condition on access shall govern.

5. Nothing in Part VI of this Permit shall be construed to limit or otherwise affect the Permittee's liability and obligation to perform corrective action including corrective action beyond the facility boundary, notwithstanding the lack of access. DTSC may determine that additional on-site measures must be taken to address releases beyond the Facility boundary if access to off-site areas cannot be obtained.

Figure 1. Shell Martinez Refinery, Facility Layout

FIGURE 2. PERMITTED UNIT #1 – TANK 12038

FIGURE 3. PERMITTED UNIT #2 – Three CO BOILERS (#1, 2, and 3 counting from right side).

FIGURE 4. ETP-1 BIOTREATER

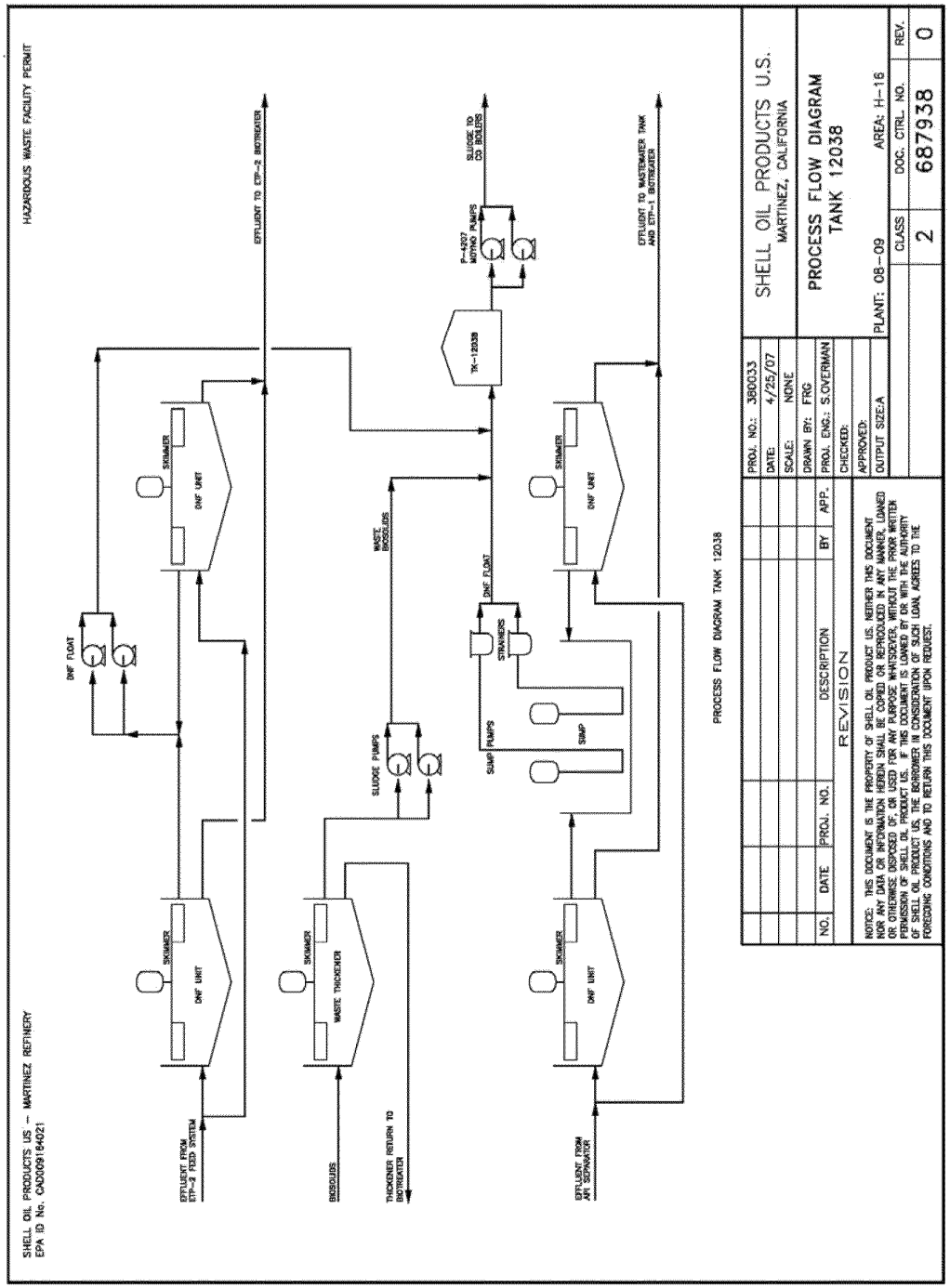

FIGURE 5. PROCESS FLOW DIAGRAM FOR PERMITTED UNIT #1 – TANK 12038

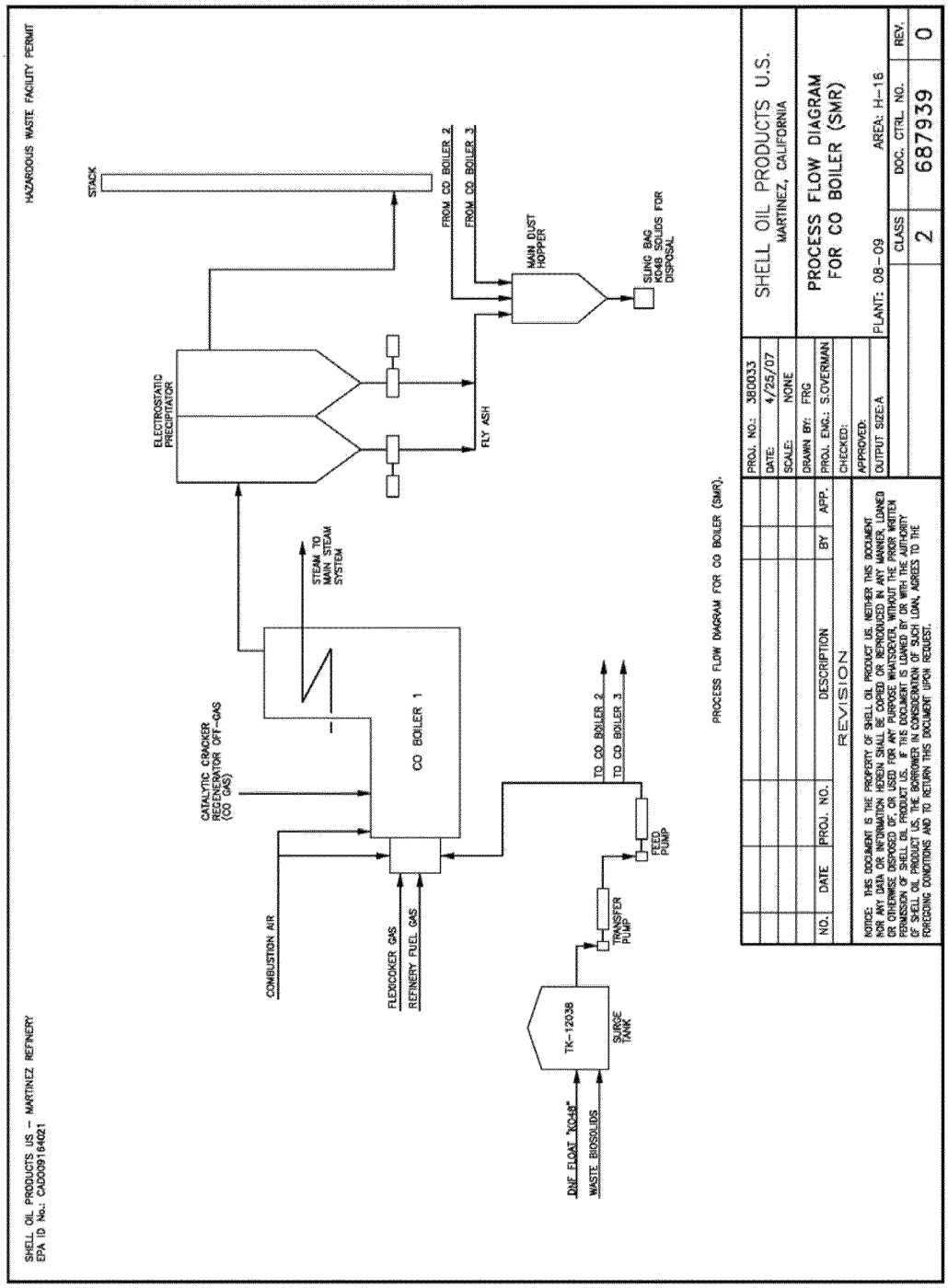

FIGURE 6. PROCESS FLOW DIAGRAM FOR PERMITTED UNIT #2 – CO BOILERS

VALERO

HAND DELIVERED

September 2, 2015

Mr. Joel Jones
Assistant Director, Enforcement Division
Environmental Protection Agency, Region IX
75 Hawthorne Street
San Francisco, CA 94105

Re: Response to Notice of Intent to File a Complaint Pursuant to RCRA and EPCRA

Dear Mr. Jones:

This letter timely responds to the Notice of Intent to File a Complaint Pursuant to RCRA and EPCRA ("NOI") issued to by the U.S. Environmental Protection Agency on July 30, 2015 to Valero Refining Company – California. The NOI is based on a multi-media compliance inspection that was conducted at Valero's Refinery in Benicia, California in May 2014. Representatives of the National Enforcement Investigations Center ("NEIC"), EPA Region 9, and the California Department of Toxic Substances Control ("DTSC") participated in the inspection.

We received a copy of the final NEIC Investigation Report and supporting documentation on August 5, 2015, and were advised that our response to the Notice is due no later than 28 days thereafter, i.e., by September 2, 2015. Further, please note that Elizabeth Bourbon, Senior Managing Counsel at Valero, has spoken with Rebecca Sugerman, Office of Regional Counsel, Region 9, to confirm Valero's interest in meeting with EPA to discuss the issues raised in the Report, with the goal of reaching an acceptable settlement of the alleged violations. A meeting is currently scheduled for September 24, 2015 at EPA's office in San Francisco. It is our understanding that EPA will defer the filing of any administrative complaint until we have had an opportunity to conduct these settlement discussions and gauge the likelihood for their successful outcome.

The alleged violations contained in the NOI are set forth below, followed by our responses.

1. Treatment and Storage of Hazardous Waste without a Permit (operating an unlined stormwater surface impoundment as a hazardous waste management unit without obtaining a RCRA permit; storing and treating hazardous waste on the heat exchanger bundle cleaning pad without a RCRA permit), 22 CCR § 66270.1(c) [see also 40 CFR § 270.1(c)].

Benicia Refinery • Valero Refining Company-California
3400 East Second Street • Benicia, California 94510-1097 • Telephone (707) 745-7011 • Facsimile (707) 745-7514

Response to #1A. Valero acknowledges that routine discharges of wastewater exceeding the Toxicity Characteristic Leaching Procedure into surface impoundments that have not been permitted under RCRA is a violation of law. However, for the reasons discussed below, Valero does not believe that the discharges in question were subject to the permitting requirement.

The NEIC Report identifies 14 days over a three-year period (2011-2013) on which the concentration of benzene in wastewater entering the Stormwater Retention Pond at the Wastewater Treatment Plant (WWTP) exceeded 0.5 mg/L. Valero has reviewed its records and confirmed that these discharges were directly attributable to six significant storm events that occurred in the Bay Area during that time period and that produced wet weather flows at the Refinery exceeding the rate at which water can be pumped to the WWTP for treatment. As explained below, these wet weather flows — which resulted in "self-diversions" to the stormwater retention pond — coincided with discrete spills and other operational incidents that occurred within the refinery and that are believed to be the cause of the benzene detected at the inlet to the pond.

Description of Refinery Sewer Systems

There are two separate process sewer systems at the Benicia Refinery. One of these collects and routes oily process wastewaters to the WWTP for treatment (the Oily Process Sewer). The other system collects and routes predominantly non-oily process wastewaters and stormwater that falls directly on process areas of the refinery to the WWTP for treatment (the API Sewer). The Oily Process Sewer is entirely segregated from the API Sewer, and was purposefully designed in this way to ensure that oily process wastewaters produced at the refinery are managed separately and do not have an opportunity to combine with stormwater during rain events and end up in the refinery's stormwater retention ponds. Wastewaters that are managed in the API Sewer, while not entirely free of hydrocarbons, are essentially clean streams that can be safely co-managed with stormwater flows during wet weather. A list of the wastewater streams that are routinely managed in the API Sewer is provided in Attachment 1.

While it is possible for streams managed in the API Sewer to contain some process materials as a result of upset conditions in the refinery (e.g., accidental spills, equipment malfunctions or breakdowns), the wastewater in the API Sewer does not typically contain visible oils, or elevated levels of benzene or other volatile organics. In this regard, the NEIC Report notes that, on the day of the inspection, the water in the stormwater retention ponds appeared clear, and oil was not observed in the water or on the banks of the ponds. NEIC Report, Item #1, at p. 19. Quarterly samples of wastewater collected at the Diversion Tank inlet (see below) in accordance with the Benzene Waste Operations NESHAPS (BWON) confirm that benzene concentrations in the wastewater conveyed in the API Sewer are extremely low and typically two to three orders of magnitude below the TCLP. See BWON Quarterly Sampling Results (2005-2015), provided in Attachment 2. Valero also recently collected three samples of accumulated sediment from the 72-inch line (see description in *Stormwater Management System* below) and analyzed them for benzene. Benzene was not detected in any of the samples, at a reporting limit of 0.005 mg/kg. A copy of the analytical report is provided in Attachment 3.

The wastewater in the API Sewer and the Oily Process Sewer is conveyed by separate lines that run from the refinery down to the Diversion/Equalization Tanks, which are located in the Lower Tank Farm. These sewer lines discharge into the Diversion/Equalization Tanks at different points on the tanks, and the wastewaters commingle once inside the tanks. The combined oily and non-oily waters are equalized in these two tanks before being pumped into the WWTP. As described below, there is also a self-diversion line connected to the API Sewer line upstream of the Equalization/Diversion Tanks that conveys water in the API Sewer through a 72-inch line to the stormwater retention pond under certain high flow conditions. There is no self-diversion line from the Oily Process Sewer. The maximum pumpout rate from the tanks to the WWTP is approximately 1,780 gpm. A diagram of the Diversion/Equalization Tanks showing the flows into and out of the tanks is provided in Attachment 4. As can be seen from the diagram, and as discussed below, process wastewater that enters the Diversion/Equalization Tanks, by design, can only be discharged to the WWTP.

Stormwater Management System

The refinery does not have a fully segregated stormwater sewer system, and stormwater that falls on process areas of the plant has the potential to commingle with non-oily process wastewaters that are collected by the API Sewer. During significant wet weather events, the volume of water entering the API Sewer and flowing toward the Diversion/Equalization Tanks increases significantly. Once the tanks are full, the incoming water backs up in the inlet line and causes the API Sewer to "self-divert" into a 72-inch line that leads to the Stormwater Retention Pond. This "self-diversion" is depicted on the diagram in Attachment 4 by the green 72-inch line labeled "To Pond." As can be seen on the diagram, there is no self-diversion line off the Oily Process Sewer.

There are no valves or other mechanical barriers to the overflow from the API Sewer line into the 72-inch line, and the hydraulic pressure created by the water that backs up in the line leading to the Diversion/Equalization Tanks causes the water to be redirected and to flow by gravity into a concrete-lined spillway (or canal) that leads into the Stormwater Retention Pond. There is no way to prevent this self-diversion from taking place, and no place for the water to go except into the Retention Pond. If the system were not designed in this manner, the API Sewer would be overwhelmed, causing serious flooding in the refinery whenever the flow rate through the API Sewer exceeded the pumpout rate from the Diversion/Equalization Tanks to the WWTP. In severe storms where the capacity of the Retention Pond is approached, stormwater can be pumped from that pond to the one or more of three retention ponds located in the Crude Field, in order to prevent flooding.

Significantly, the refinery has no record of any self-diversions into the WWTP Retention Pond during dry weather. As discussed below, the self-diversions are a wet weather phenomenon, and can occur even during relatively modest storms. It should be emphasized that there is no way that wastewater in the Oily Process Sewer — which would be expected to contain greater concentrations of benzene — can be diverted into the Stormwater Retention Pond.

The stormwater system was originally designed and engineered so as to avoid catastrophic flooding of the WWTP and uncontrolled discharges of untreated refinery wastewater to Sulfur Springs Creek and Carquinez Strait. By containing these high volume wet weather flows within the Refinery's system of stormwater impoundments for brief periods of time while the WWTP "catches up," Valero is able to avoid any potential for water quality impairment or other environmental harm that might be associated with uncontrolled discharges of untreated wastewater during these severe storm events.

Valero implements numerous operational procedures to minimize the amount of benzene or other process residuals that might become entrained in stormwater when these types of system overflows occur, but it has no way of knowing in advance whether any given volume of stormwater may contain benzene at a concentration exceeding 0.5 mg/L. None of the streams that routinely flow through the API Sewer contain hazardous levels of benzene, but Valero acknowledges that benzene has the potential to enter the system. Valero monitors all diversions into the Retention Pond on each day they occur, but it can be very difficult after the fact to determine the source or cause of benzene exceedances that were detected.

In reviewing the conditions associated with the six storm events associated with the self-diversions, it is apparent that the flow rate in the API Sewer exceeded the capacity of the Equalization Tanks and the WWTP to process the water, thus resulting in the diversions to the Retention Pond on the 14 days in question. The rainfall on these days ranged from 0.68 inches (approximately 1.2 million gallons) to 1.59 inches (approximately 2.7 million gallons). While some portion of the water falling on the refinery would have been retained inside tank berms for some period of time, a significant quantity of stormwater entered the API Sewer and flowed towards the WWTP. In some cases, the storms were preceded by other large storms, occurring back-to-back over several days. In other cases, the rain fell in intense bursts, rapidly overwhelming the Diversion/Equalization Tanks and causing water to divert into the Retention Pond. For example, Valero calculated that the rate of flow into the Retention Pond during the peak intensity of the storm that occurred on March 24-25, 2011, was almost 10,000 gpm, more than five times the maximum pumpout rate of the Diversion/Equalization Tanks. On other days the rain fell more steadily over longer periods of time, but still accumulated at a faster rate than could be processed by the WWTP.

Emergency Containment Systems

Because the flows through the API Sewer do not typically contain visible hydrocarbons or volatile organics, Valero has historically attributed benzene exceedances that have been detected during these self-diversions to spills or releases of fuels or other benzene-containing raw materials or intermediates that somehow entered the API Sewer and were conveyed to the pond during large rain events. Based on the concentration of benzene in the samples collected at the Diversion Canal Spillway (the inlet to the pond), Valero is able to calculate whether the reportable quantity for benzene (10 pounds) was exceeded and if so, the incident is reported to the National Response Center and the California Emergency Management Agency. Containment of these spills, through retention of the stormwater in the Retention Pond, avoids uncontrolled discharges of untreated wastewater to Sulphur Springs Creek and Carquinez Strait.

Under 40 CFR § 264.1(g)(8)(i)(B), actions taken to contain an imminent and substantial threat of a discharge of hazardous waste, where consistent with preparedness and prevention requirements and contingency planning and emergency response procedures, are exempt from the requirement to obtain a permit under RCRA. An identical provision is contained in the state hazardous waste regulations at 22 CCR § 66264.1(g)(8)(A)2. Valero believes that the self-diversions into the stormwater retention pond(s) fall squarely within this exemption, as explained below.

Due Diligence and Investigation of Causes of Benzene Exceedances

Valero has reviewed its internal records and has been able to correlate benzene exceedances detected in the wet weather self-diversions to the Stormwater Retention Pond with upset conditions that had occurred in the refinery. Where upset conditions result in significant discharges of hydrocarbons into the API Sewer, it can take several months for all residual hydrocarbons to be removed from the system, even where the bulk of the oil is removed during initial cleanup efforts. The oil becomes trapped inside junction boxes (J-boxes) in the water conveyance system. The J-boxes have underflow weirs and the only way hydrocarbon can move downstream is through mixing, turbulence and dissolution in the water in the J-box over time. This accounts for the variability that is seen in the sampling results associated with the wet weather diversions.

Brief descriptions of the operational spills/events that likely led to increased benzene-containing hydrocarbon to the API Sewer are provided below.

February 23-28, March 6, 18, 24-25, 2011. On December 2, 2010, an unexpected loss of feed to the FCCU occurred, resulting in the eventual emergency shutdown of the unit. During this event, the refinery experienced a migration of benzene-containing oily solids from the FCCU pumparound system into ancillary pipelines and equipment. A significant amount of material entered the sewer system when the lines were opened and cleared. While most of the free product was recovered from sumps and other locations within the sewer, a sheen was observed on the Stormwater Retention Pond, indicating that hydrocarbon had moved through the system during subsequent heavy rains and was likely responsible for the elevated benzene detected in the water entering the pond. Based on the quantity of material that was released, the emergency shutdown of the FCCU is believed to have impacted stormwater quality through the end of March 2011.

March 27, 2012. On March 14, 2012, there was a Blending Pad Sump overflow to the API Sewer and to grade. Based on the current piping configuration within the refinery, overflows from this sump are carried to a point just upstream of the self-diversion line, allowing residual hydrocarbons to be carried into the pond under wet weather conditions. Plans are underway to relocate the lift station discharge line to a point downstream of the self-diversion take-off location, forcing this water into the Diversion/Equalization tanks rather than down the 72-inch line.

September 21, 2013. The exceedance detected on this date is believed to be attributable to another shutdown of the FCCU, as well as the Coker unit, as a result of a gas turbine trip. During FCCU startups and shutdowns, C5s are typically diverted to the flare drum where vapors and any liquid hydrocarbons are separated and both are recovered either by flare gas recovery or as slop oil. As a result of the investigation for benzene in stormwater, it was determined that some of the C5 hydrocarbons routed to the flare during startup may have condensed in the flare drum and flowed to the API sewer via the water seal. It is likely this same carryover phenomenon occurred in early 2011 and may have contributed to the exceedance of benzene in diverted stormwater at that time. Since this event in September 2013, Valero has developed a flare seal drum monitoring procedure to prevent hydrocarbon carryover from the flare seal drums to the process sewer. Subsequent events in 2014 that resulted in shutdown/startup of the FCCU, and that occurred after implementation of this new procedure, did not result in elevated benzene concentrations at the Diversion Tanks.

December 6-7, 2013. The benzene exceedances detected on these dates are believed to be attributable to residual C5s from the September 21, 2013 incident that were still trapped in the sewer system and/or from a Blending Pad Sump overflow that occurred on September 26, 2013.

Other Considerations and Mitigating Factors

If EPA disagrees with Valero's interpretation of the regulations and maintains that the permit exemption for treatment and containment of emergency discharges or threatened discharges of hazardous waste is not applicable in the circumstances, Valero does not wish to contest EPA's interpretation of the regulations if a reasonable resolution of this issue can be reached. Valero is in the process of evaluating further modifications that it can make to its operating procedures and protocols to ensure that episodic wet weather flows to the stormwater impoundments during significant storm events do not contain benzene in excess of 0.5 mg/L. Valero is committed to identifying these sources and eliminating their discharge into the sewer system. Had we understood that EPA would consider emergency containment measures of this nature to subject the stormwater impoundments to RCRA permitting, Valero would have implemented necessary changes in operating procedures many years ago in an effort to eliminate the potential for these sporadic and infrequent benzene discharges to enter the stormwater retention ponds.

However, continued operation of the stormwater impoundments is essential to the safe and environmentally prudent operation of the Refinery. Closure of the ponds, whether permanently or for the lengthy period of time that would be necessary to comply with the Minimum Technology Requirements and obtain a Hazardous Waste Facility Permit from DTSC, is not a viable option and the cost of such corrective action cannot be justified from an environmental perspective. Temporary or permanent closure of the ponds would pose an ongoing significant risk of major flooding within the Refinery, which threat is made more imminent by reports of a major El Nino weather pattern that is predicted for this coming wet season.

Valero has also sampled the sediments in the stormwater impoundments in connection with an assessment of the impoundments required by the San Francisco Bay Regional Water Quality Control Board. The sediments do not exhibit hazardous characteristics, are not listed hazardous

wastes,[1] and do not contain any hazardous constituents at concentrations that could potentially pose a concern from a groundwater quality perspective. Historical pond sediment data from the 2015 groundwater report for organics, along with a labeled photograph showing the location of the ponds, are provided in Attachment 5. The retention pond had a maximum total benzene concentration of 2.6 mg/kg, which would equate to a maximum TCLP value of 0.13 mg/l, below hazardous waste criteria. All other ponds were ND for benzene. Based on these data, the Regional Board concurred that pond sediment sampling is no longer required. A copy of the Regional Board's letter is provided in Attachment 6.

The NEIC report states that Valero removed sediments from the stormwater retention pond last year and classified the sediments for disposal as F037. This is incorrect. In fact, the sediment was removed from the inlet channel to the impoundment and was conservatively classified as F037 based on the possibility that historically deposited primary sludge might have been present in this line. Other sediments that were described in the NEIC report as having elevated benzene concentrations were not stormwater pond sediments.

Conclusion

For all of the reasons set forth above, Valero does not believe that the Stormwater Retention Pond is subject to RCRA permitting. Numerous actions have been taken over the past several years to minimize the potential for episodic, accidental releases of benzene-containing hydrocarbons to enter the API Sewer, where they are susceptible to self-diversion into the stormwater retention pond during significant wet weather events and qualify for exemption under 40 CFR § 264.1(g)(8)(i)(B) and 22 CCR § 66264.1(g)(8)(A)2.

Response #1B: Valero disputes this alleged violation, and maintains that its operation of the heat exchanger bundle cleaning pad is exempt from hazardous waste permitting requirements.

This alleged violation is nearly identical to a violation that was alleged by DTSC in 2010. At the time, DTSC claimed that the Refinery violated Health & Safety Code, Section 25201(a) (the hazardous waste permit requirement) by storing RCRA hazardous waste without a permit or variance, by allowing heat exchanger bundle cleaning sludge (K050) to remain in the heat exchanger bundle cleaning pad trough and sump. Valero disputed this violation on the grounds that the heat exchanger bundle cleaning pad is part of the refinery's oil recovery system and as such is exempt from the requirements of the Hazardous Waste Control Law.

The explanation that was provided to DTSC is reiterated below and is equally applicable to the violation alleged in EPA's NOI. DTSC concurred with Valero's explanation and subsequently withdrew the violation in 2011. DTSC did not provide Valero with written confirmation of its decision not to pursue enforcement, but no penalties were ever assessed and DTSC did not

[1] Wet weather flows of oily refinery wastewaters and stormwater do not give rise to primary sludge.

require Valero to modify its operational practices at the pad or to obtain a permit. A copy of Valero's email to DTSC legal counsel and enforcement staff confirming withdrawal of the violation relating to the heat exchanger bundle cleaning pad is provided in Attachment 7.

The heat exchanger bundle cleaning pad, including the trough and sump, is an integral part of the Refinery's oil recovery system and serves as the point of entry and initial separation stage for secondary oil-bearing materials that are not hard-piped directly to the oil recovery system. In addition to heat exchanger bundles, other types of oily process equipment (e.g., vacuum trucks, pumps, strainers, etc.) are routinely dismantled, cleaned and/or washed out on the pad. The oily solids and water generated by these operations are washed down the trough and into the sump where initial oily water/solids separation takes place. The outlet to the sump is blocked by a valve, which remains closed to allow time for the solids to settle to the bottom of the sump. At the end of the cleaning operation, the valve is opened, allowing the oily water and finer oily sediments to flow to the Wastewater Treatment Plant (which is located immediately downstream of the sump) where they undergo further oil/water/solids separation and oil recovery. The large solids that have settled to the bottom sump are removed by mechanical means and placed in the dewatering bin for subsequent disposal as K050 or F037, depending on the type of equipment being cleaned. Photographs of the bundle cleaning pad, the operating instructions for the pad and a schematic showing how the pad is integrated with the remainder of the refinery's oil recovery system are provided in Attachment 8. Oil may be directly sent to slop oil tanks or combined with the oily sludge generated in the downstream oil recovery equipment that is pumped directly from the oil recovery system to the Coker as feedstock. Approximately 9,000-12,000 barrels (378,000-504,000 gallons) of oily sludge is pumped to the Coker per month. The oil recovery process is a routine, consistent, and significant aspect of the ongoing manufacturing process.

Under RCRA, oil-bearing hazardous secondary materials generated at petroleum refineries are excluded from classification as solid waste under 40 CFR § 261.4(a)(12)(i) where they are processed to remove recoverable oil and the recovered oil (whether in the form of liquid or sludge) is subsequently returned to the refinery for processing as feed for distillation columns or as coker feedstock. While California has not adopted this specific federal exclusion, there are other provisions of California law that function in an equivalent manner and exempt both the pad and the oily materials managed on the pad from regulation under the Hazardous Waste Control Law.

Under Health & Safety Code section 25144(c), "units, including associated piping, that are part of a system used for the recovery of oil from oil-bearing materials, and the associated storage of oil-bearing materials and recovered oil," are exempt from regulation under the Hazardous Waste Control Law so long as the conditions specified in section 25144(c)(1)-(6) are satisfied. This exclusion is not dependent on the application of the federal wastewater treatment unit exemption

(which is not applicable in California in any event except with respect to wastes that are hazardous solely because they contain more than 0.5 mg/L benzene), nor is it dependent on the express inclusion of the pad as a component of the refinery's NPDES-permitted wastewater treatment system.[2] The exemption in HSC section 25144(c) is subject to a number of conditions, as specified in the statute, each of which is met in the circumstances. Heat exchanger bundle cleaning sludge (K050) and other oily wastewaters and sludges generated at the refinery contain economically recoverable amounts of oil and qualify as oil-bearing materials that may be handled in exempt oil recovery systems.

The collection/conveyance system at the bundle pad represents the first step in the refinery's oil recovery process and was designed specifically to manage oily wastes that have a high solids content. The bundle cleaning pad provides a safe and effective means of separating out large solids are not suitable for reinsertion into the refining process, allowing oily water and finer oily solids that are suitable for reinsertion into the refining process (oily sludges) to move along to subsequent stages of the oil recovery process. Liquid oil is routed to slop oil tanks for reinsertion into the refining process and oily sludges are pumped directly to the Coker as feedstock. These large solids are disposed of off-site as a RCRA hazardous waste.

The NEIC Report states "[t]hese secondary materials are not recycled; they are shipped off-site for disposal as hazardous wastes." See NEIC Report, p. 21, Item 3. The Report goes on to state that "the exemption under 40 CFR § 261.4(a)(12)(i) applies to hazardous secondary materials that are reinserted into the petroleum refining process. The waste[s] handled on the heat exchanger bundle cleaning pad are treated before they are shipped off-site for disposal as hazardous waste and are not inserted back in to the petroleum refinery process." *Id.*, at p. 23. These statements are incomplete, misleading and inaccurate.

Both the federal and state oil recovery exemptions contemplate that oil recovery processes may generate residuals that are not suitable for return to the process and that will be disposed of off-site. See 40 CFR § 261.4(a)(12)(i) (residuals generated from the processing or recycling of oil-bearing hazardous secondary materials classified as F037); HSC section 25144(c)(5) (any residual materials removed from an exempt oil recovery unit must be managed in accordance with all other applicable laws). The fact that residuals (the large solids that settle to the bottom of the sump) are removed from the system for disposal does <u>not</u> mean that the secondary oil-

---

[2] There is a separate provision of RCRA that exempt mixtures of wastewater and certain listed wastes (including K050) generated during refinery cleaning operations, where (i) the listed wastes are discharged to the refinery's oil recovery sewer before primary oil/water/solids separation, and (ii) the wastewater is ultimately discharged under an NPDES permit.. See 40 CFR § 261.3(a)(2)(iv)(C). An identical provision is found in 22 CCR § 66261.3(a)(2)(F)(3) which specifically excludes from the definition of hazardous waste, mixtures of K050 and wastewaters subject to regulation under the Clean Water Act. These state and federal exemptions operate to avoid classification of refinery wastewater as a listed hazardous waste by virtue of the mixture rule.

bearing materials that were placed on the pad in the first place are ineligible for exclusion or exemption under 40 CFR § 261.4(a)(12)(i) or HSC § 25144(c).

EPA has made it clear that the exclusion in 40 CFR § 261.4(a)(12(i) "applies to the oil-bearing hazardous secondary materials from the point they are generated, even though some preprocessing may be required before insertion, and even if this preprocessing generates residuals that are not inserted (and thus not excluded under this provision)." See Attachment 9, Letter from Robert Springer, Director, EPA Office of Solid Waste, to Mr. Rob Short, Tetra Process Services, L.C., undated (RO 14677) (emphasis added). There can be no doubt that oil-bearing hazardous secondary materials such as those handled on the bundle cleaning pad are not "solid wastes" under RCRA while they are undergoing any stage of oil recovery so long as the recovered oil (whether in the form of liquid or sludge) is returned to the refining process, as is in fact the case here. The exclusion is not destroyed because a component of the original secondary material cannot be recycled back to the process and must be disposed of. The fact that EPA promulgated a rule which classifies residuals from the oil recovery process as F037 proves this point. The NEIC investigators apparently are of the opinion that 100% of the secondary material must be reinserted into the refining process in order for the exclusion to apply. That interpretation is not supported by the language of the regulation or EPA guidance.

The Report also states that, "as stated in California's DTSC inspection report [link omitted], 40 CFR § 261.4(a)(12)(i) has not been adopted by the state of California; therefore this provision does not apply at the facility." NEIC Report, at p. 23, Item 3. While it is true that California has not adopted the federal exclusion, NEIC completely overlooks the existence of the state oil-bearing material exemption in HSC section 25144(c) which is functionally equivalent to the federal exclusion in 40 CFR § 261.4(a)(12)(i). It was on the basis of this state exclusion that DTSC withdrew the 2010 violation relating to the heat exchanger bundle cleaning pad.

Based on the foregoing, Valero believes the current management practices at the heat exchanger bundle cleaning pad comply with all applicable hazardous waste regulations and that this alleged violation cannot be substantiated. Valero has implemented strict operating requirements for the cleaning pad, including removal of all residuals on the pad surface after each cleaning job or at the end of each shift. The pad provides adequate containment of all materials, and other operating requirements are designed to avoid overspray and trackout and ensure rapid cleanup of any inadvertent spills. A copy of the Operating Requirements is provided in Attachment 8.

To the extent that EPA has any concern about the integrity of the pad itself and its ability to adequately contain the oil-bearing materials managed on the pad, EPA has indicated that the adequacy of containment structures for purposes of evaluating eligibility for recycling exclusions and exemptions should be left to authorized states. See, e.g., October 29, 1992 letter from Sylvia Lowrance (RO 11705) (the determination as to whether a specific tank, container, containment building, or other unit meets State design criteria for 'no land disposal' is site specific, and may vary from place to place. While the Agency clearly intends for the units to contain the wastes adequately, the Agency leaves the creation of such site specific criteria to local authorities); August 21, 1998 letter from Elizabeth Cotsworth (Faxback 14283) (determinations about containment units will likely be made predominantly by authorized states and that due to site-

and waste-specific variability, containment units will have to accommodate the variety of conditions that may be presented). In this case, DTSC has endorsed Valero's use of the heat exchanger bundle cleaning pad in accordance with the Refinery's Operating Requirements. Copies of the EPA guidance letters are provided in Attachment10.

2. Failure to Make a Hazardous Waste Determination, 22 CCR § 66262.11 [see also 40 CFR § 262.11].

Response: This alleged violation is based on the possibility that stormwater containing benzene in excess of 0.5 mg/L was pumped from the WWTP Stormwater Retention Pond into another stormwater retention pond located in the crude tank area (Crude Field Retention Pond C). The NEIC Report notes that on March 6, 2011, the inlet concentration of benzene at the Stormwater Retention Pond was measured at 2.89 mg/L, and that water was pumped from that pond into Pond C on that same day. EPA asserts that Valero should have sampled the water entering the crude field pond to determine if it also exceeded 0.5 mg/L benzene and, if so, to presumably cease the discharge.

Valero's response to this violation is the same as set forth under Allegation #1A. On March 6, 2011, a very large storm produced a total of 0.89 inches of rain, exceeding the allowable capacity of the stormwater retention pond at the WWTP. As noted in the NEIC Report, Valero is required by its Waste Discharge Requirements issued by the San Francisco Bay Regional Water Quality Control Board to pump water from this pond to one or more crude field retention ponds when the water reaches a depth of three (3) feet in the WWTP stormwater retention pond. Valero had no other place to pump the water that was rapidly accumulating in the WWTP retention pond, and had it not pumped the water to Pond C, the wastewater treatment plant would have flooded and the water would have overflowed to Sulfur Springs Creek and the Bay.

Even if Valero had collected a sample of the discharge into Pond C and determined that the benzene concentration exceeded 0.5 mg/L, we could not have diverted the flow. Valero maintains that the discharge into Pond C falls within the scope of 40 CFR § 264.1(g)(8)(i)(B), as a containment activity during an immediate response to an imminent and substantial threat of a discharge of hazardous waste. Under the circumstances, collecting a sample of the water entering Pond C would have been an act of futility and, in any event, was unnecessary in light of the permit exemption referenced above.

3. Failure to Minimize the Possibility of Unplanned Release of Hazardous Waste or Hazardous Waste Constituents to Air, Soil or Surface Water, 22 CCR § 66265.31 as referenced by § 66262.34(a)(4) [see also 40 CFR §265.31, as referenced by § 262.34(a)(4)].

Response: This alleged violation is based on an accidental release of oily sludge that, under normal operating conditions, is pumped directly from the wastewater treatment system to the Refinery's Coker, in accordance with 40 CFR § 261.4(a)(12)(i) and HSC section 25144(c). During the time period in question, the Coker was down for maintenance, and Valero had hired a third-party contractor to transport the oily sludges by vacuum truck from the wastewater treatment plant to an area in the Refinery where Baker Tanks were being used to temporarily

store the sludge until the Coker was brought back on line. Unfortunately, the contractor accidentally connected the vacuum truck to a line that was not connected to a Baker Tank, resulting to the discharge of sludge to the ground.

Upon discovery of the incident (which occurred on March 28, 2014), Valero immediately excavated the affected soil and placed it in roll-off bins with labels indicating that the soil was "Pending Classification." This label states that the "contents of this container have not yet been classified and must be managed as Hazardous Waste until classified." See Attachment 11. Because the oil-bearing material was excluded from the definition of "solid waste" (under RCRA) and was being managed in accordance with HSC section 25144(c) at the time it was accidentally released, Valero believed in good faith that the point of generation for the waste that was being managed in the bins was the excavation of the impacted soil. Analytical results subsequently confirmed that the soil did not exhibit any hazardous waste characteristics, and the "Pending Classification" labels on the bins were changed to Nonhazardous Waste labels.

On the day of the NEIC inspection (May 14, 2014), the inspectors observed staining on the ground at the base of one of the Baker Tank. Valero described the incident that had occurred in March and explained that the impacted soil had been cleaned up, analyzed and determined to be nonhazardous. The small amount of stained soil at the base of the Baker Tank could not be accessed for removal until the Baker Tanks themselves were removed. In response to the inspectors' assertion that the solid waste exclusion is not applicable to oil-bearing material that has been spilled onto the ground, and that the contaminated soil should be classified as F037 under the "contained in" rule, Valero immediately relabeled the bins with appropriate hazardous waste labels. The bins were subsequently sent to Clean Harbors' facility in Buttonwillow, under a hazardous waste manifest and with a Land Disposal Restriction notice indicating that the soil met the land disposal treatment standards for F037 without further treatment.

Valero has reviewed the regulations and other agency guidance regarding the classification of environmental media that is contaminated with oil-bearing hazardous secondary materials that are accidentally released to the environment and that are not able to be returned to the process for recycling. Valero acknowledges that its prior understanding of this issue was incomplete and agrees with EPA that the impacted soil should have been classified as F037. Because this classification error was discovered before any soil was removed from the Refinery and within the 90-day accumulation period, the only violation that occurred was the failure to properly label the bins for a period of 22 days (the number of days between the day the bins were relabeled from "Pending Classification" to "Nonhazardous Waste" and the date of the inspection). Throughout this period (including while the bins were labeled as nonhazardous waste), <u>in all other respects</u>, the bins were managed in accordance with regulations applicable to accumulation of hazardous waste, including weekly inspections. This labeling error was the result of a good faith misunderstanding of the applicable regulations, and did not result in any actual or threatened harm to the environment. Further, Valero confirmed with Clean Harbors that, because the soil met the treatment standards for F037 without need for treatment, the soil would have been disposed of in the same cell even if it had been accepted at the landfill as a nonhazardous waste.

Valero believes that other residual spillage described in the NEIC Report (see Item 4, at pp. 23-24) was *de minimis* in nature and does not fairly support the claim that Valero failed to operate the facility in a manner that minimized the possibility of a fire, explosion, or release of hazardous waste or hazardous waste constituents to air, soil or surface water. Valero has established Standard Operating Procedures that require the prompt cleanup of all spills of hazardous waste and hazardous materials by appropriately trained personnel, and all employees are required to comply with these procedures.

4. Failure to Submit Timely, Complete and Correct Toxic Chemical Release Inventory Forms Pursuant to EPCRA Section 313 for:

    - Benzene in reporting years ("RY") 2010, 2011 and 2012;
    - Ethylbenzene in RY2012;
    - Ethylene in RY2010 and RY2011;
    - Toluene in RY2010, RY2011 and RY2012; and
    - Xylene (mixed isomers) in RY2010, RY2011 and RY2012.

Response to #4. Reading the NOI together with the NEIC investigation report, Valero believes this allegation addresses two distinct issues identified as "Areas of Noncompliance" in the inspection report, and therefore our response below addresses each of these in turn.

The NEIC finding identified as "AON 2" states that Valero reported fugitive air release values that do not correspond with values that NEIC calculated based on using Valero's calculation methodology and background information, as summarized in Table 3 of the NEIC inspection report. These observations relate to reported emissions of benzene, ethylene, toluene, and xylene in RY 2010 and 2011. After researching this allegation, Valero agrees that fugitive emissions of benzene, ethylene, toluene, and xylene were over-reported for RY2010. These erroneous values are attributable to a transitional issue associated with conversion to a new electronic emissions estimation and reporting system known as VALAIR (IHS Essential Air Module). Based on Valero's review of the RY2010 data, it appears that monthly 2010 fugitives data was not properly loaded into the VALAIR system. Rather than producing error messages or calculating fugitive emissions of these constituents based on null values, VALAIR automatically used the last correct monthly data set entered for 2009 as the basis of calculating 2010 estimates. This resulted in over-reporting of 2010 fugitive emissions. Valero has recalculated fugitives emissions using 2010 monthly data and is prepared to resubmit RY2010 Form Rs following discussion with EPA. Please note, however, that Valero's revised estimates using 2010 data do not match the NEIC-calculated values because NEIC used a fugitive speciation profile established in 2012, which would not have been available in RY2010 when calculating RY2010 emissions.

As for RY2011 fugitive emissions of benzene, ethylene, toluene, and xylene, Valero has reexamined the data inputs, methodology, and calculated results, and has confirmed that our reported values are correct. After studying the discrepancy between our results and those obtained by NEIC, we believe the difference may result from NEIC's application of a fugitive speciation profile established in 2012, which would not have been available in RY2011 for calculating 2011 emissions. However, we do not have NEIC's detailed calculations available to confirm. If EPA is willing to provide those before the meeting, we would be happy to compare them with our own to determine whether this is why our calculated results do not agree.

The discussion of AON #2 in the NEIC inspection report also asserts that Valero incorrectly calculated fugitive cooling tower emissions of benzene, ethylbenzene, toluene, and xylene for RY2012. Valero conducted a detailed review of emissions estimates for the cooling tower for RY2012 and found our reported values to be correct, true and complete. Again, we think it may be helpful for our staff to compare their detailed calculations to determine the cause of the discrepancy between our numbers.

Thank you very much for your consideration of these issues. We look forward to meeting with your staff on September 24.

Very truly yours,

Christopher W. Howe

Christopher W. Howe
HSE & Governmental Affairs
Director

Attachments 1-11

Valero Benicia Refinery WWTP Feedstreams

		gpm			
STRIPPED SOUR WATER		320-400			
	Total	320-400			
OILY PROCESS SEWER (D-2001A + Crude Water Draws from Tk 1757, TK 1793)					
	D-2001A Comprised of the following:				
	D-113, Desalter	150-200			
	D-206, Alky Treater	40-50			
	D-328, H2U KO Drum	5-20			
	D-1008/09/10, Alky Coalescers	1-2			
	D-1061, Alky Unit	0-1			
	D-1064, Alky Unit	0-10			
	D-2907, PWFR Regen Water	30-200			
	T-4301, MTBE Unit	30-80			
	Note: Crude water draw flows not measured	250-560			
API SEWER					
					BFW
					Blowdowns
CFHU			30.0		
	D-605 550# steam blowdown	30.0			30.0
CKR			2.0		
	E-925 BFW blowdown	1.0			1.0
	E-903 BFW blowdown	1.0			1.0
Coke Silo			19.3		
	Sewer flush	15.0			
	D-1905 scrubber separator	3.5			
	Paving washdown	0.8			
FCCU			83.0		
	ST-702 dump stack seal	80.0			
	E-704 BFW blowdown	2.0			2.0
	E-705 BFW blowdown	1.0			1.0
H2U			8.5		
	D-328 liquid from C-302	8.4			
	Analyzer purge	0.1			
HCU			0.0		
Marketing			0.0		
MEA			0.0		
Fuel Gas			0.0		
OM&S			39.5		
	Tank farm steam condensate	32.0			
	Lift stations	7.5			
PS			35.0		
	C-102 cooling jacket	30.0			
	E-138 BFW blowdown	5.0			5.0
NRU			170.0		
	T-2904 regen scrubber water	95.0			
	D-2907 reactivation gas scrub	75.0			
SGU			21.0		
	E-1301B BFW blowdown	20.0			20.0
	E-1301A BFW blowdown	1.0			1.0
TGU					
	Tail gas heater condensate	12.0			
UTIL			272.8		
	TK-2318 neut tank	118.8			
	CT-2401 CTW blowdown	70.0			
	SG-701 BFW blowdown	18.0			18.0
	SG-702 BFW blowdown	13.0			13.0
	SG-1032 BFW blowdown	9.0			9.0
	SG-1031 BFW blowdown	8.0			8.0
	SG-2902 BFW blowdown	8.0			8.0
	SG-2302 BFW blowdown	8.0			8.0
	SG-401 BFW blowdown	7.0			7.0
	SG-703 BFW blowdown	6.0			6.0
	SG-2301 BFW blowdown	4.0			4.0
	SG-4901 BFW blowdown	3.0			3.0
	Total	681.1	681.1		145.0

ATTACHMENT 1

Benzene Waste Operations NESHAPS Quarterly Sampling Results
(2005 – 2015)

Date	Results (EOL 1)	
	Qualifier	Benzene - API Sewer (mg/L)
7/20-27/2005		0.0021
9/16-29/2005		0.00091, 0.00078
10/22/2005		0.005, 0.0045, 0.0044
1/19/2006		0.155, 0.107, 0.173
4/2/2006		0.041, 0.045, 0.048
9/28/2006		0.450
4Q2006		Could not find
1/2/2007		0.011
4/3/2007	ND	No value provided, RL was 0.001
9/28/2007		0.0014, 0.0054
4Q2007		Could not find
1/2/2008		0.11
6/30/2008	ND	No value provided, RL was 0.0025
9/29/2008		0.005
12/10/2008		0.0007
1/2/2009		0.027
4/2/2009		0.0018
7/16/2009		0.0053
10/3/2009	ND	No value provided, RL was 0.0005
1/2/2010		0.00063
4/2/2010		0.0046
7/2/2010		0.00154
10/4/2010	ND	0.0005
1/1/2011		Not taken – refinery-wide T/A
5/26/2011	ND	0.0005
9/23/2011		0.0015
12/13/2011		0.0012
1/4/2012		0.0005
5/3/2012		0.0365
7/17/2012		0.0021
10/23/2012	DNQ	0.00049
2/6/2013		0.0041
4/15/2013		3.64
7/17/2013		0.0009
11/19/2013	ND	0.005
1/30/2014	ND	0.025
4/3/2014		0.0084
7/2/2014		0.0016
10/28/2014	ND	0.00015
2/18/2015		0.0056
4/3/2015	ND	0.00015

NOTE 1: "ND" means the sample was not detected and is below the method detection limit

ATTACHMENT 2

August 28, 2015

Analytical Report

Client: **Valero**
3400 East Second St
Benicia, CA 94510

Attn: **John Lazorik**

Work Order #: 1508026

Project: Waste Management Department
P.O. Number: 4503183370
Project Received: August 19, 2015 14:42
Project Reported: August 28, 2015 15:01

Sincerely,

Hossein Khoshkhoo

H. Khoshkhoo, Ph.D.
Laboratory Director / President

ATTACHMENT 3

WORK ORDER: 1508026 **COC Number:** 22984

Valero
3400 East Second St
Benicia, CA 94510

Project: Waste Management Department
PO Number: 4503183370
Project Manager: John Lazorik

Sample Summary

Lab ID	Sample	Matrix	Date Sampled	Date Received
1508026-01	72" Line Mid Lower	Solid	August 18, 2015 0:00	August 19, 2015 14:42
1508026-02	72" Line South Side Mid	Solid	August 18, 2015 0:00	August 19, 2015 14:42
1508026-03	72" Line South Lower	Solid	August 18, 2015 0:00	August 19, 2015 14:42

The contents of this report apply to the sample(s) analyzed in accordance with the chain of custody document.
No duplication of this report is allowed, except in its entirety.

685 Stone Road #11 & 12 • Benicia, CA 94510 • (707) 747-6081 • (800) 747-6082 • Fax (707) 747-6082

WORK ORDER: 1508026 **COC Number:** 22984

Valero
3400 East Second St
Benicia, CA 94510

Project: Waste Management Department
PO Number: 4503183370
Project Manager: John Lazorik

Sample Results

Sample: 72" Line Mid Lower
1508026-01 (Solid) **Sample Type:** Grab
Batch: 15H0080 **Sample Date:** August 18, 2015 0:00 **Prep Date:** August 21, 2015 16:27

Analyte	Reporting Limit	Qual	Result	Unit	Dilution Factor	Date Analyzed	Method	Analyst
Volatile Organic Compounds by EPA 8260								
Benzene	0.00050		ND	mg/kg	1	8/21/15	EPA 8260 B	AM
Bromobenzene	0.00050		ND	mg/kg	1	8/21/15	EPA 8260 B	AM
Bromochloromethane	0.00050		ND	mg/kg	1	8/21/15	EPA 8260 B	AM
Bromodichloromethane	0.00050		ND	mg/kg	1	8/21/15	EPA 8260 B	AM
Bromoform	0.00050		ND	mg/kg	1	8/21/15	EPA 8260 B	AM
Bromomethane	0.00050		ND	mg/kg	1	8/21/15	EPA 8260 B	AM
n-Butylbenzene	0.125		**21.1**	mg/kg	250	8/21/15	EPA 8260 B	AM
sec-Butylbenzene	0.125		**6.00**	mg/kg	250	8/21/15	EPA 8260 B	AM
tert-Butylbenzene	0.00050		ND	mg/kg	1	8/21/15	EPA 8260 B	AM
Carbon Tetrachloride	0.00050		ND	mg/kg	1	8/21/15	EPA 8260 B	AM
Chlorobenzene	0.00050		ND	mg/kg	1	8/21/15	EPA 8260 B	AM
Chloroethane	0.00050		ND	mg/kg	1	8/21/15	EPA 8260 B	AM
Chloroform	0.00050		ND	mg/kg	1	8/21/15	EPA 8260 B	AM
Chloromethane	0.00050		ND	mg/kg	1	8/21/15	EPA 8260 B	AM
2-Chlorotoluene	0.00050		ND	mg/kg	1	8/21/15	EPA 8260 B	AM
4-Chlorotoluene	0.00050		ND	mg/kg	1	8/21/15	EPA 8260 B	AM
Dibromochloromethane	0.00050		ND	mg/kg	1	8/21/15	EPA 8260 B	AM
1,2-Dibromo-3-chloropropane	0.00050		ND	mg/kg	1	8/21/15	EPA 8260 B	AM
1,2-Dibromoethane	0.00050		ND	mg/kg	1	8/21/15	EPA 8260 B	AM
Dibromomethane	0.00050		ND	mg/kg	1	8/21/15	EPA 8260 B	AM
1,2-Dichlorobenzene	0.00050		ND	mg/kg	1	8/21/15	EPA 8260 B	AM
1,3-Dichlorobenzene	0.00050		ND	mg/kg	1	8/21/15	EPA 8260 B	AM
1,4-Dichlorobenzene	0.00050		ND	mg/kg	1	8/21/15	EPA 8260 B	AM
Dichlorodifluoromethane	0.00050		ND	mg/kg	1	8/21/15	EPA 8260 B	AM

The contents of this report apply to the sample(s) analyzed in accordance with the chain of custody document.
No duplication of this report is allowed, except in its entirety.

685 Stone Road #11 & 12 • Benicia, CA 94510 • (707) 747-6081 • (800) 747-6082 • Fax (707) 747-6082

WORK ORDER: 1508026 **COC Number:** 22984

Valero
3400 East Second St
Benicia, CA 94510

Project: Waste Management Department
PO Number: 4503183370
Project Manager: John Lazorik

Sample Results
(Continued)

Sample: 72" Line Mid Lower (Continued)
1508026-01 (Solid) **Sample Type:** Grab
Batch: 15H0080 **Sample Date:** August 18, 2015 0:00 **Prep Date:** August 21, 2015 16:27

Analyte	Reporting Limit	Qual	Result	Unit	Dilution Factor	Date Analyzed	Method	Analyst
Volatile Organic Compounds by EPA 8260 (Continued)								
1,1-Dichloroethane	0.00050		ND	mg/kg	1	8/21/15	EPA 8260 B	AM
1,2-Dichloroethane	0.00050		ND	mg/kg	1	8/21/15	EPA 8260 B	AM
1,1-Dichloroethene	0.00050		ND	mg/kg	1	8/21/15	EPA 8260 B	AM
cis-1,2-Dichloroethene	0.00050		ND	mg/kg	1	8/21/15	EPA 8260 B	AM
trans-1,2-Dichloroethene	0.00050		ND	mg/kg	1	8/21/15	EPA 8260 B	AM
1,2-Dichloropropane	0.00050		ND	mg/kg	1	8/21/15	EPA 8260 B	AM
1,3-Dichloropropane	0.00050		ND	mg/kg	1	8/21/15	EPA 8260 B	AM
2,2-Dichloropropane	0.00050		ND	mg/kg	1	8/21/15	EPA 8260 B	AM
1,1-Dichloropropene	0.00050		ND	mg/kg	1	8/21/15	EPA 8260 B	AM
Ethylbenzene	0.00050		ND	mg/kg	1	8/21/15	EPA 8260 B	AM
Hexachlorobutadiene	0.00050		ND	mg/kg	1	8/21/15	EPA 8260 B	AM
Isopropylbenzene	0.125		**3.62**	mg/kg	250	8/21/15	EPA 8260 B	AM
p-Isopropyltoluene	0.00050		ND	mg/kg	1	8/21/15	EPA 8260 B	AM
Methylene Chloride	0.00100		ND	mg/kg	1	8/21/15	EPA 8260 B	AM
Naphthalene	0.125		**14.9**	mg/kg	250	8/21/15	EPA 8260 B	AM
n-Propylbenzene	0.125		**12.6**	mg/kg	250	8/21/15	EPA 8260 B	AM
Styrene	0.00050		ND	mg/kg	1	8/21/15	EPA 8260 B	AM
1,1,1,2-Tetrachloroethane	0.00050		ND	mg/kg	1	8/21/15	EPA 8260 B	AM
1,1,2,2-Tetrachloroethane	0.00050		ND	mg/kg	1	8/21/15	EPA 8260 B	AM
Tetrachloroethene	0.00050		ND	mg/kg	1	8/21/15	EPA 8260 B	AM
Toluene	0.00050		ND	mg/kg	1	8/21/15	EPA 8260 B	AM
1,2,3-Trichlorobenzene	0.00050		ND	mg/kg	1	8/21/15	EPA 8260 B	AM
1,2,4-Trichlorobenzene	0.00050		ND	mg/kg	1	8/21/15	EPA 8260 B	AM
1,1,1-Trichloroethane	0.00050		ND	mg/kg	1	8/21/15	EPA 8260 B	AM

The contents of this report apply to the sample(s) analyzed in accordance with the chain of custody document.
No duplication of this report is allowed, except in its entirety.

685 Stone Road #11 & 12 • Benicia, CA 94510 • (707) 747-6081 • (800) 747-6082 • Fax (707) 747-6082

WORK ORDER: 1508026 **COC Number:** 22984

Valero
3400 East Second St
Benicia, CA 94510

Project: Waste Management Department
PO Number: 4503183370
Project Manager: John Lazorik

Sample Results
(Continued)

Sample: 72" Line Mid Lower (Continued)
1508026-01 (Solid) **Sample Type:** Grab
Batch: 15H0080 **Sample Date:** August 18, 2015 0:00 **Prep Date:** August 21, 2015 16:27

Analyte	Reporting Limit	Qual	Result	Unit	Dilution Factor	Date Analyzed	Method	Analyst
Volatile Organic Compounds by EPA 8260 (Continued)								
1,1,2-Trichloroethane	0.00050		ND	mg/kg	1	8/21/15	EPA 8260 B	AM
Trichloroethene	0.00050		ND	mg/kg	1	8/21/15	EPA 8260 B	AM
Trichlorofluoromethane	0.00050		ND	mg/kg	1	8/21/15	EPA 8260 B	AM
1,2,3-Trichloropropane, TCP	0.00050		ND	mg/kg	1	8/21/15	EPA 8260 B	AM
1,2,4-Trimethylbenzene	0.00050		ND	mg/kg	1	8/21/15	EPA 8260 B	AM
1,3,5-Trimethylbenzene	0.00050		ND	mg/kg	1	8/21/15	EPA 8260 B	AM
Vinyl Chloride	0.00050		ND	mg/kg	1	8/21/15	EPA 8260 B	AM
o-Xylene	0.00050		ND	mg/kg	1	8/21/15	EPA 8260 B	AM
m,p-Xylenes	0.00100		ND	mg/kg	1	8/21/15	EPA 8260 B	AM
cis-1,3-Dichloropropene	0.00050		ND	mg/kg	1	8/21/15	EPA 8260 B	AM
trans-1,3-Dichloropropene	0.00050		ND	mg/kg	1	8/21/15	EPA 8260 B	AM
Methyl-tert-butyl ether (MTBE)	0.00050		ND	mg/kg	1	8/21/15	EPA 8260 B	AM
Surrogate: Dibromofluoromethane	*70-130*		*104%*			*8/21/15*	*EPA 8260 B*	AM
Surrogate: Toluene-d8	*70-130*		*119%*			*8/21/15*	*EPA 8260 B*	AM
Surrogate: 4-Bromofluorobenzene	*70-130*		*92.6%*			*8/21/15*	*EPA 8260 B*	AM
Semi-Volatile Organic Compounds by EPA 8270								
Acenaphthene	2.50		ND	mg/kg	5	8/25/15	EPA 8270C	ZT
Acenaphthylene	2.50		ND	mg/kg	5	8/25/15	EPA 8270C	ZT
Anthracene	2.50		**4.48**	mg/kg	5	8/25/15	EPA 8270C	ZT
Benzidine	10.0		ND	mg/kg	5	8/25/15	EPA 8270C	ZT
Benzoic Acid	10.0		ND	mg/kg	5	8/25/15	EPA 8270C	ZT
Benzo (a) anthracene	2.50		ND	mg/kg	5	8/25/15	EPA 8270C	ZT
Benzo (b) fluoranthene	2.50		ND	mg/kg	5	8/25/15	EPA 8270C	ZT

The contents of this report apply to the sample(s) analyzed in accordance with the chain of custody document.
No duplication of this report is allowed, except in its entirety.

685 Stone Road #11 & 12 • Benicia, CA 94510 • (707) 747-6081 • (800) 747-6082 • Fax (707) 747-6082

WORK ORDER: 1508026 **COC Number:** 22984

Valero
3400 East Second St
Benicia, CA 94510

Project: Waste Management Department
PO Number: 4503183370
Project Manager: John Lazorik

Sample Results
(Continued)

Sample: 72" Line Mid Lower (Continued)
1508026-01 (Solid) **Sample Type:** Grab
Batch: 15H0077 **Sample Date:** August 18, 2015 0:00 **Prep Date:** August 21, 2015 13:59

Analyte	Reporting Limit	Qual	Result	Unit	Dilution Factor	Date Analyzed	Method	Analyst
Semi-Volatile Organic Compounds by EPA 8270 (Continued)								
Benzo (k) fluoranthene	2.50		ND	mg/kg	5	8/25/15	EPA 8270C	ZT
Benzo (g,h,i) perylene	2.50		ND	mg/kg	5	8/25/15	EPA 8270C	ZT
Benzo (a) pyrene	2.50		ND	mg/kg	5	8/25/15	EPA 8270C	ZT
Benzyl Alcohol	2.50		ND	mg/kg	5	8/25/15	EPA 8270C	ZT
Bis (2-chloroethoxy) methane	2.50		ND	mg/kg	5	8/25/15	EPA 8270C	ZT
Bis (2-choroethyl) Ether	2.50		ND	mg/kg	5	8/25/15	EPA 8270C	ZT
Bis (2-chloroisopropyl) Ether	2.50		ND	mg/kg	5	8/25/15	EPA 8270C	ZT
Bis (2-ethylhexy) Phthalate	5.00	J	**3.00**	mg/kg	5	8/25/15	EPA 8270C	ZT
4-Bromophenyl Phenyl Ether	2.50		ND	mg/kg	5	8/25/15	EPA 8270C	ZT
Butylbenzyl Phthalate	2.50		ND	mg/kg	5	8/25/15	EPA 8270C	ZT
4-Chloroaniline	2.50		ND	mg/kg	5	8/25/15	EPA 8270C	ZT
2-Chloronaphthalene	2.50		ND	mg/kg	5	8/25/15	EPA 8270C	ZT
4-Chlorophenyl Phenyl Ether	2.50		ND	mg/kg	5	8/25/15	EPA 8270C	ZT
Chrysene	2.50	J	**2.32**	mg/kg	5	8/25/15	EPA 8270C	ZT
Dibenzo (a,h) anthracene	2.50		ND	mg/kg	5	8/25/15	EPA 8270C	ZT
Dibenzofuran	2.50		ND	mg/kg	5	8/25/15	EPA 8270C	ZT
Di-n-butyl Phthalate	2.50		ND	mg/kg	5	8/25/15	EPA 8270C	ZT
1,2-Dichlorobenzene	2.50		ND	mg/kg	5	8/25/15	EPA 8270C	ZT
1,3-Dichlorobenzene	2.50		ND	mg/kg	5	8/25/15	EPA 8270C	ZT
1,4-Dichlorobenzene	2.50		ND	mg/kg	5	8/25/15	EPA 8270C	ZT
3,3'-Dichlorobenzidine	5.00		ND	mg/kg	5	8/25/15	EPA 8270C	ZT
Diethyl Phthalate	2.50		ND	mg/kg	5	8/25/15	EPA 8270C	ZT
Dimethyl Phthalate	2.50		ND	mg/kg	5	8/25/15	EPA 8270C	ZT
2,4-Dinitrotoluene	2.50		ND	mg/kg	5	8/25/15	EPA 8270C	ZT

The contents of this report apply to the sample(s) analyzed in accordance with the chain of custody document.
No duplication of this report is allowed, except in its entirety.

685 Stone Road #11 & 12 • Benicia, CA 94510 • (707) 747-6081 • (800) 747-6082 • Fax (707) 747-6082

WORK ORDER: 1508026 **COC Number:** 22984

Valero
3400 East Second St
Benicia, CA 94510

Project: Waste Management Department
PO Number: 4503183370
Project Manager: John Lazorik

Sample Results
(Continued)

Sample: 72" Line Mid Lower (Continued)
1508026-01 (Solid) **Sample Type:** Grab
Batch: 15H0077 **Sample Date:** August 18, 2015 0:00 **Prep Date:** August 21, 2015 13:59

Analyte	Reporting Limit	Qual	Result	Unit	Dilution Factor	Date Analyzed	Method	Analyst
Semi-Volatile Organic Compounds by EPA 8270 (Continued)								
2,6-Dinitrotoluene	2.50		ND	mg/kg	5	8/25/15	EPA 8270C	ZT
Di-n-octyl Phthalate	2.50		ND	mg/kg	5	8/25/15	EPA 8270C	ZT
Fluoranthene	2.50		ND	mg/kg	5	8/25/15	EPA 8270C	ZT
Fluorene	2.50		**4.93**	mg/kg	5	8/25/15	EPA 8270C	ZT
Hexachlorobenzene	2.50		ND	mg/kg	5	8/25/15	EPA 8270C	ZT
Hexachlorobutadiene	2.50		ND	mg/kg	5	8/25/15	EPA 8270C	ZT
Hexachlorocyclopentadiene	2.50		ND	mg/kg	5	8/25/15	EPA 8270C	ZT
Hexachloroethane	2.50		ND	mg/kg	5	8/25/15	EPA 8270C	ZT
Indeno (1,2,3-cd) pyrene	2.50		ND	mg/kg	5	8/25/15	EPA 8270C	ZT
Isophorone	2.50		ND	mg/kg	5	8/25/15	EPA 8270C	ZT
2-Methylnaphthalene	2.50		**33.8**	mg/kg	5	8/25/15	EPA 8270C	ZT
Naphthalene	2.50		**12.3**	mg/kg	5	8/25/15	EPA 8270C	ZT
2-Nitroaniline	2.50		ND	mg/kg	5	8/25/15	EPA 8270C	ZT
3-Nitroaniline	2.50		ND	mg/kg	5	8/25/15	EPA 8270C	ZT
4-Nitroaniline	2.50		ND	mg/kg	5	8/25/15	EPA 8270C	ZT
Nitrobenzene	2.50		ND	mg/kg	5	8/25/15	EPA 8270C	ZT
N-Nitrosodiphenylamine	2.50		ND	mg/kg	5	8/25/15	EPA 8270C	ZT
N-Nitrosodi-n-propylamine	2.50		ND	mg/kg	5	8/25/15	EPA 8270C	ZT
Phenanthrene	2.50		**20.5**	mg/kg	5	8/25/15	EPA 8270C	ZT
Pyrene	2.50		**5.59**	mg/kg	5	8/25/15	EPA 8270C	ZT
1,2,4-Trichlorobenzene	2.50		ND	mg/kg	5	8/25/15	EPA 8270C	ZT
4-Chloro-3-methylphenol	2.50		ND	mg/kg	5	8/25/15	EPA 8270C	ZT
2-Chlorophenol	2.50		ND	mg/kg	5	8/25/15	EPA 8270C	ZT
2,4-Dichlorophenol	2.50		ND	mg/kg	5	8/25/15	EPA 8270C	ZT

The contents of this report apply to the sample(s) analyzed in accordance with the chain of custody document.
No duplication of this report is allowed, except in its entirety.

685 Stone Road #11 & 12 • Benicia, CA 94510 • (707) 747-6081 • (800) 747-6082 • Fax (707) 747-6082

WORK ORDER: 1508026 **COC Number:** 22984

Valero
3400 East Second St
Benicia, CA 94510

Project: Waste Management Department
PO Number: 4503183370
Project Manager: John Lazorik

Sample Results
(Continued)

Sample: 72" Line Mid Lower (Continued)
1508026-01 (Solid) **Sample Type:** Grab
Batch: 15H0077 **Sample Date:** August 18, 2015 0:00 **Prep Date:** August 21, 2015 13:59

Analyte	Reporting Limit	Qual	Result	Unit	Dilution Factor	Date Analyzed	Method	Analyst
Semi-Volatile Organic Compounds by EPA 8270 (Continued)								
2,4-Dimethylphenol	2.50		ND	mg/kg	5	8/25/15	EPA 8270C	ZT
4,6-Dinitro-2-methylphenol	2.50		ND	mg/kg	5	8/25/15	EPA 8270C	ZT
2,4-Dinitrophenol	5.00		ND	mg/kg	5	8/25/15	EPA 8270C	ZT
2-Methylphenol	2.50		ND	mg/kg	5	8/25/15	EPA 8270C	ZT
4-Methylphenol	2.50		ND	mg/kg	5	8/25/15	EPA 8270C	ZT
2-Nitrophenol	2.50		ND	mg/kg	5	8/25/15	EPA 8270C	ZT
4-Nitrophenol	2.50		ND	mg/kg	5	8/25/15	EPA 8270C	ZT
Pentachlorophenol	2.50		ND	mg/kg	5	8/25/15	EPA 8270C	ZT
Phenol	2.50		ND	mg/kg	5	8/25/15	EPA 8270C	ZT
2,4,5-Trichlorophenol	2.50		ND	mg/kg	5	8/25/15	EPA 8270C	ZT
2,4,6-Trichlorophenol	2.50		ND	mg/kg	5	8/25/15	EPA 8270C	ZT
3-Methylphenol	2.50		ND	mg/kg	5	8/25/15	EPA 8270C	ZT
Surrogate: 2-Fluorophenol	*60-125*		*79.8%*			*8/25/15*	*EPA 8270C*	ZT
Surrogate: Phenol-d6	*54-134*		*67.2%*			*8/25/15*	*EPA 8270C*	ZT
Surrogate: Nitrobenzene-d5	*59-141*		*75.5%*			*8/25/15*	*EPA 8270C*	ZT
Surrogate: 2-Fluorobiphenyl	*60-127*		*94.5%*			*8/25/15*	*EPA 8270C*	ZT
Surrogate: 2,4,6-Tribromophenol	*43-151*		*109%*			*8/25/15*	*EPA 8270C*	ZT
Surrogate: p-Terphenyl-d14	*39-166*		*88.5%*			*8/25/15*	*EPA 8270C*	ZT
Total Metals by EPA 6010B (ICP-AES)								
Antimony	1.25		**2.50**	mg/kg	5	8/20/15	EPA 6010	ZT
Arsenic	2.50		ND	mg/kg	5	8/20/15	EPA 6010	ZT
Barium	1.25		**80.5**	mg/kg	5	8/20/15	EPA 6010	ZT
Beryllium	1.25		ND	mg/kg	5	8/20/15	EPA 6010	ZT

The contents of this report apply to the sample(s) analyzed in accordance with the chain of custody document.
No duplication of this report is allowed, except in its entirety.

685 Stone Road #11 & 12 • Benicia, CA 94510 • (707) 747-6081 • (800) 747-6082 • Fax (707) 747-6082

WORK ORDER: 1508026 **COC Number:** 22984

Valero
3400 East Second St
Benicia, CA 94510

Project: Waste Management Department
PO Number: 4503183370
Project Manager: John Lazorik

Sample Results
(Continued)

Sample: 72" Line Mid Lower (Continued)
1508026-01 (Solid) **Sample Type:** Grab
Batch: 15H0075 **Sample Date:** August 18, 2015 0:00 **Prep Date:** August 20, 2015 9:05

Analyte	Reporting Limit	Qual	Result	Unit	Dilution Factor	Date Analyzed	Method	Analyst
Total Metals by EPA 6010B (ICP-AES) (Continued)								
Cadmium	1.25		ND	mg/kg	5	8/20/15	EPA 6010	ZT
Chromium	1.25		**45.8**	mg/kg	5	8/20/15	EPA 6010	ZT
Cobalt	1.25		**6.18**	mg/kg	5	8/20/15	EPA 6010	ZT
Copper	1.25		**41.0**	mg/kg	5	8/20/15	EPA 6010	ZT
Lead	1.25		**40.0**	mg/kg	5	8/20/15	EPA 6010	ZT
Mercury	0.0177		**0.968**	mg/kg	1	8/25/15	EPA 7471	ZT
Molybdenum	1.25		**18.2**	mg/kg	5	8/20/15	EPA 6010	ZT
Nickel	1.25		**99.0**	mg/kg	5	8/20/15	EPA 6010	ZT
Selenium	2.50		**22.7**	mg/kg	5	8/20/15	EPA 6010	ZT
Silver	1.25		ND	mg/kg	5	8/20/15	EPA 6010	ZT
Thallium	5.00		**10.1**	mg/kg	5	8/20/15	EPA 6010	ZT
Vanadium	1.25		**88.8**	mg/kg	5	8/20/15	EPA 6010	ZT
Zinc	1.25		**579**	mg/kg	5	8/20/15	EPA 6010	ZT
TCLP Metals								
Chromium	0.0500		ND	mg/L	1	8/28/15	EPA 6010	ZT
Nickel	0.0500		**0.223**	mg/L	1	8/28/15	EPA 6010	ZT
Wet Chemistry								
Cyanide, Total	0.00500		**0.0636**	mg/kg	1	8/26/15	SM 4500 CN- C,E	AM
Reactive Sulfide	0.177		**1.56**	mg/kg	1	8/21/15	SW 846 Ch. 7.3.4.1	AM

The contents of this report apply to the sample(s) analyzed in accordance with the chain of custody document.
No duplication of this report is allowed, except in its entirety.

685 Stone Road #11 & 12 • Benicia, CA 94510 • (707) 747-6081 • (800) 747-6082 • Fax (707) 747-6082

WORK ORDER: 1508026 **COC Number:** 22984

Valero
3400 East Second St
Benicia, CA 94510

Project: Waste Management Department
PO Number: 4503183370
Project Manager: John Lazorik

Sample Results
(Continued)

Sample: 72" Line South Side Mid
1508026-02 (Solid) **Sample Type:** Grab
Batch: 15H0080 **Sample Date:** August 18, 2015 0:00 **Prep Date:** August 21, 2015 16:27

Analyte	Reporting Limit	Qual	Result	Unit	Dilution Factor	Date Analyzed	Method	Analyst
Volatile Organic Compounds by EPA 8260								
Benzene	0.00050		ND	mg/kg	1	8/21/15	EPA 8260 B	AM
Bromobenzene	0.00050		ND	mg/kg	1	8/21/15	EPA 8260 B	AM
Bromochloromethane	0.00050		ND	mg/kg	1	8/21/15	EPA 8260 B	AM
Bromodichloromethane	0.00050		ND	mg/kg	1	8/21/15	EPA 8260 B	AM
Bromoform	0.00050		ND	mg/kg	1	8/21/15	EPA 8260 B	AM
Bromomethane	0.00050		ND	mg/kg	1	8/21/15	EPA 8260 B	AM
n-Butylbenzene	0.125		**9.47**	mg/kg	250	8/21/15	EPA 8260 B	AM
sec-Butylbenzene	0.125		**4.82**	mg/kg	250	8/21/15	EPA 8260 B	AM
tert-Butylbenzene	0.00050		ND	mg/kg	1	8/21/15	EPA 8260 B	AM
Carbon Tetrachloride	0.00050		ND	mg/kg	1	8/21/15	EPA 8260 B	AM
Chlorobenzene	0.00050		ND	mg/kg	1	8/21/15	EPA 8260 B	AM
Chloroethane	0.00050		ND	mg/kg	1	8/21/15	EPA 8260 B	AM
Chloroform	0.00050		ND	mg/kg	1	8/21/15	EPA 8260 B	AM
Chloromethane	0.00050		ND	mg/kg	1	8/21/15	EPA 8260 B	AM
2-Chlorotoluene	0.00050		ND	mg/kg	1	8/21/15	EPA 8260 B	AM
4-Chlorotoluene	0.00050		ND	mg/kg	1	8/21/15	EPA 8260 B	AM
Dibromochloromethane	0.00050		ND	mg/kg	1	8/21/15	EPA 8260 B	AM
1,2-Dibromo-3-chloropropane	0.00050		ND	mg/kg	1	8/21/15	EPA 8260 B	AM
1,2-Dibromoethane	0.00050		ND	mg/kg	1	8/21/15	EPA 8260 B	AM
Dibromomethane	0.00050		ND	mg/kg	1	8/21/15	EPA 8260 B	AM
1,2-Dichlorobenzene	0.00050		ND	mg/kg	1	8/21/15	EPA 8260 B	AM
1,3-Dichlorobenzene	0.00050		ND	mg/kg	1	8/21/15	EPA 8260 B	AM
1,4-Dichlorobenzene	0.00050		ND	mg/kg	1	8/21/15	EPA 8260 B	AM
Dichlorodifluoromethane	0.00050		ND	mg/kg	1	8/21/15	EPA 8260 B	AM

The contents of this report apply to the sample(s) analyzed in accordance with the chain of custody document.
No duplication of this report is allowed, except in its entirety.

685 Stone Road #11 & 12 • Benicia, CA 94510 • (707) 747-6081 • (800) 747-6082 • Fax (707) 747-6082

WORK ORDER: 1508026 **COC Number:** 22984

Valero
3400 East Second St
Benicia, CA 94510

Project: Waste Management Department
PO Number: 4503183370
Project Manager: John Lazorik

Sample Results
(Continued)

Sample: 72" Line South Side Mid (Continued)
1508026-02 (Solid) **Sample Type:** Grab
Batch: 15H0080 **Sample Date:** August 18, 2015 0:00 **Prep Date:** August 21, 2015 16:27

Analyte	Reporting Limit	Qual	Result	Unit	Dilution Factor	Date Analyzed	Method	Analyst
Volatile Organic Compounds by EPA 8260 (Continued)								
1,1-Dichloroethane	0.00050		ND	mg/kg	1	8/21/15	EPA 8260 B	AM
1,2-Dichloroethane	0.00050		ND	mg/kg	1	8/21/15	EPA 8260 B	AM
1,1-Dichloroethene	0.00050		ND	mg/kg	1	8/21/15	EPA 8260 B	AM
cis-1,2-Dichloroethene	0.00050		ND	mg/kg	1	8/21/15	EPA 8260 B	AM
trans-1,2-Dichloroethene	0.00050		ND	mg/kg	1	8/21/15	EPA 8260 B	AM
1,2-Dichloropropane	0.00050		ND	mg/kg	1	8/21/15	EPA 8260 B	AM
1,3-Dichloropropane	0.00050		ND	mg/kg	1	8/21/15	EPA 8260 B	AM
2,2-Dichloropropane	0.00050		ND	mg/kg	1	8/21/15	EPA 8260 B	AM
1,1-Dichloropropene	0.00050		ND	mg/kg	1	8/21/15	EPA 8260 B	AM
Ethylbenzene	0.00050		ND	mg/kg	1	8/21/15	EPA 8260 B	AM
Hexachlorobutadiene	0.00050		ND	mg/kg	1	8/21/15	EPA 8260 B	AM
Isopropylbenzene	0.125		**2.94**	mg/kg	250	8/21/15	EPA 8260 B	AM
p-Isopropyltoluene	0.00050		ND	mg/kg	1	8/21/15	EPA 8260 B	AM
Methylene Chloride	0.00100		ND	mg/kg	1	8/21/15	EPA 8260 B	AM
Naphthalene	0.125		**6.34**	mg/kg	250	8/21/15	EPA 8260 B	AM
n-Propylbenzene	0.125		**5.60**	mg/kg	250	8/21/15	EPA 8260 B	AM
Styrene	0.00050		ND	mg/kg	1	8/21/15	EPA 8260 B	AM
1,1,1,2-Tetrachloroethane	0.00050		ND	mg/kg	1	8/21/15	EPA 8260 B	AM
1,1,2,2-Tetrachloroethane	0.00050		ND	mg/kg	1	8/21/15	EPA 8260 B	AM
Tetrachloroethene	0.00050		ND	mg/kg	1	8/21/15	EPA 8260 B	AM
Toluene	0.00050		ND	mg/kg	1	8/21/15	EPA 8260 B	AM
1,2,3-Trichlorobenzene	0.00050		ND	mg/kg	1	8/21/15	EPA 8260 B	AM
1,2,4-Trichlorobenzene	0.00050		ND	mg/kg	1	8/21/15	EPA 8260 B	AM
1,1,1-Trichloroethane	0.00050		ND	mg/kg	1	8/21/15	EPA 8260 B	AM

The contents of this report apply to the sample(s) analyzed in accordance with the chain of custody document.
No duplication of this report is allowed, except in its entirety.

685 Stone Road #11 & 12 • Benicia, CA 94510 • (707) 747-6081 • (800) 747-6082 • Fax (707) 747-6082

WORK ORDER: 1508026 **COC Number:** 22984

Valero
3400 East Second St
Benicia, CA 94510

Project: Waste Management Department
PO Number: 4503183370
Project Manager: John Lazorik

Sample Results
(Continued)

Sample: 72" Line South Side Mid (Continued)
1508026-02 (Solid) **Sample Type:** Grab
Batch: 15H0080 **Sample Date:** August 18, 2015 0:00 **Prep Date:** August 21, 2015 16:27

Analyte	Reporting Limit	Qual	Result	Unit	Dilution Factor	Date Analyzed	Method	Analyst
Volatile Organic Compounds by EPA 8260 (Continued)								
1,1,2-Trichloroethane	0.00050		ND	mg/kg	1	8/21/15	EPA 8260 B	AM
Trichloroethene	0.00050		ND	mg/kg	1	8/21/15	EPA 8260 B	AM
Trichlorofluoromethane	0.00050		ND	mg/kg	1	8/21/15	EPA 8260 B	AM
1,2,3-Trichloropropane, TCP	0.00050		ND	mg/kg	1	8/21/15	EPA 8260 B	AM
1,2,4-Trimethylbenzene	0.00050		ND	mg/kg	1	8/21/15	EPA 8260 B	AM
1,3,5-Trimethylbenzene	0.00050		ND	mg/kg	1	8/21/15	EPA 8260 B	AM
Vinyl Chloride	0.00050		ND	mg/kg	1	8/21/15	EPA 8260 B	AM
o-Xylene	0.00050		ND	mg/kg	1	8/21/15	EPA 8260 B	AM
m,p-Xylenes	0.00100		ND	mg/kg	1	8/21/15	EPA 8260 B	AM
cis-1,3-Dichloropropene	0.00050		ND	mg/kg	1	8/21/15	EPA 8260 B	AM
trans-1,3-Dichloropropene	0.00050		ND	mg/kg	1	8/21/15	EPA 8260 B	AM
Methyl-tert-butyl ether (MTBE)	0.00050		ND	mg/kg	1	8/21/15	EPA 8260 B	AM
Surrogate: Dibromofluoromethane	*70-130*		*104%*			*8/21/15*	*EPA 8260 B*	AM
Surrogate: Toluene-d8	*70-130*		*118%*			*8/21/15*	*EPA 8260 B*	AM
Surrogate: 4-Bromofluorobenzene	*70-130*		*103%*			*8/21/15*	*EPA 8260 B*	AM
Semi-Volatile Organic Compounds by EPA 8270								
Acenaphthene	5.00		ND	mg/kg	10	8/25/15	EPA 8270C	ZT
Acenaphthylene	5.00		ND	mg/kg	10	8/25/15	EPA 8270C	ZT
Anthracene	5.00		ND	mg/kg	10	8/25/15	EPA 8270C	ZT
Benzidine	20.0		ND	mg/kg	10	8/25/15	EPA 8270C	ZT
Benzoic Acid	20.0		ND	mg/kg	10	8/25/15	EPA 8270C	ZT
Benzo (a) anthracene	5.00		ND	mg/kg	10	8/25/15	EPA 8270C	ZT
Benzo (b) fluoranthene	5.00		ND	mg/kg	10	8/25/15	EPA 8270C	ZT

The contents of this report apply to the sample(s) analyzed in accordance with the chain of custody document.
No duplication of this report is allowed, except in its entirety.

685 Stone Road #11 & 12 • Benicia, CA 94510 • (707) 747-6081 • (800) 747-6082 • Fax (707) 747-6082

WORK ORDER: 1508026 **COC Number:** 22984

Valero
3400 East Second St
Benicia, CA 94510

Project: Waste Management Department
PO Number: 4503183370
Project Manager: John Lazorik

Sample Results
(Continued)

Sample: 72" Line South Side Mid (Continued)
1508026-02 (Solid) **Sample Type:** Grab
Batch: 15H0077 **Sample Date:** August 18, 2015 0:00 **Prep Date:** August 21, 2015 13:59

Analyte	Reporting Limit	Qual	Result	Unit	Dilution Factor	Date Analyzed	Method	Analyst
Semi-Volatile Organic Compounds by EPA 8270 (Continued)								
Benzo (k) fluoranthene	5.00		ND	mg/kg	10	8/25/15	EPA 8270C	ZT
Benzo (g,h,i) perylene	5.00		ND	mg/kg	10	8/25/15	EPA 8270C	ZT
Benzo (a) pyrene	5.00		ND	mg/kg	10	8/25/15	EPA 8270C	ZT
Benzyl Alcohol	5.00		ND	mg/kg	10	8/25/15	EPA 8270C	ZT
Bis (2-chloroethoxy) methane	5.00		ND	mg/kg	10	8/25/15	EPA 8270C	ZT
Bis (2-choroethyl) Ether	5.00		ND	mg/kg	10	8/25/15	EPA 8270C	ZT
Bis (2-chloroisopropyl) Ether	5.00		ND	mg/kg	10	8/25/15	EPA 8270C	ZT
Bis (2-ethylhexy) Phthalate	10.0		ND	mg/kg	10	8/25/15	EPA 8270C	ZT
4-Bromophenyl Phenyl Ether	5.00		ND	mg/kg	10	8/25/15	EPA 8270C	ZT
Butylbenzyl Phthalate	5.00		ND	mg/kg	10	8/25/15	EPA 8270C	ZT
4-Chloroaniline	5.00		ND	mg/kg	10	8/25/15	EPA 8270C	ZT
2-Chloronaphthalene	5.00		ND	mg/kg	10	8/25/15	EPA 8270C	ZT
4-Chlorophenyl Phenyl Ether	5.00		ND	mg/kg	10	8/25/15	EPA 8270C	ZT
Chrysene	5.00		ND	mg/kg	10	8/25/15	EPA 8270C	ZT
Dibenzo (a,h) anthracene	5.00		ND	mg/kg	10	8/25/15	EPA 8270C	ZT
Dibenzofuran	5.00		ND	mg/kg	10	8/25/15	EPA 8270C	ZT
Di-n-butyl Phthalate	5.00		ND	mg/kg	10	8/25/15	EPA 8270C	ZT
1,2-Dichlorobenzene	5.00		ND	mg/kg	10	8/25/15	EPA 8270C	ZT
1,3-Dichlorobenzene	5.00		ND	mg/kg	10	8/25/15	EPA 8270C	ZT
1,4-Dichlorobenzene	5.00		ND	mg/kg	10	8/25/15	EPA 8270C	ZT
3,3'-Dichlorobenzidine	10.0		ND	mg/kg	10	8/25/15	EPA 8270C	ZT
Diethyl Phthalate	5.00		ND	mg/kg	10	8/25/15	EPA 8270C	ZT
Dimethyl Phthalate	5.00		ND	mg/kg	10	8/25/15	EPA 8270C	ZT
2,4-Dinitrotoluene	5.00		ND	mg/kg	10	8/25/15	EPA 8270C	ZT

The contents of this report apply to the sample(s) analyzed in accordance with the chain of custody document.
No duplication of this report is allowed, except in its entirety.

685 Stone Road #11 & 12 • Benicia, CA 94510 • (707) 747-6081 • (800) 747-6082 • Fax (707) 747-6082

WORK ORDER: 1508026 **COC Number:** 22984

Valero
3400 East Second St
Benicia, CA 94510

Project: Waste Management Department
PO Number: 4503183370
Project Manager: John Lazorik

Sample Results
(Continued)

Sample: 72" Line South Side Mid (Continued)
1508026-02 (Solid) **Sample Type:** Grab
Batch: 15H0077 **Sample Date:** August 18, 2015 0:00 **Prep Date:** August 21, 2015 13:59

Analyte	Reporting Limit	Qual	Result	Unit	Dilution Factor	Date Analyzed	Method	Analyst
Semi-Volatile Organic Compounds by EPA 8270 (Continued)								
2,6-Dinitrotoluene	5.00		ND	mg/kg	10	8/25/15	EPA 8270C	ZT
Di-n-octyl Phthalate	5.00		ND	mg/kg	10	8/25/15	EPA 8270C	ZT
Fluoranthene	5.00		ND	mg/kg	10	8/25/15	EPA 8270C	ZT
Fluorene	5.00		ND	mg/kg	10	8/25/15	EPA 8270C	ZT
Hexachlorobenzene	5.00		ND	mg/kg	10	8/25/15	EPA 8270C	ZT
Hexachlorobutadiene	5.00		ND	mg/kg	10	8/25/15	EPA 8270C	ZT
Hexachlorocyclopentadiene	5.00		ND	mg/kg	10	8/25/15	EPA 8270C	ZT
Hexachloroethane	5.00		ND	mg/kg	10	8/25/15	EPA 8270C	ZT
Indeno (1,2,3-cd) pyrene	5.00		ND	mg/kg	10	8/25/15	EPA 8270C	ZT
Isophorone	5.00		ND	mg/kg	10	8/25/15	EPA 8270C	ZT
2-Methylnaphthalene	5.00		ND	mg/kg	10	8/25/15	EPA 8270C	ZT
Naphthalene	5.00		ND	mg/kg	10	8/25/15	EPA 8270C	ZT
2-Nitroaniline	5.00		ND	mg/kg	10	8/25/15	EPA 8270C	ZT
3-Nitroaniline	5.00		ND	mg/kg	10	8/25/15	EPA 8270C	ZT
4-Nitroaniline	5.00		ND	mg/kg	10	8/25/15	EPA 8270C	ZT
Nitrobenzene	5.00		ND	mg/kg	10	8/25/15	EPA 8270C	ZT
N-Nitrosodiphenylamine	5.00		ND	mg/kg	10	8/25/15	EPA 8270C	ZT
N-Nitrosodi-n-propylamine	5.00		ND	mg/kg	10	8/25/15	EPA 8270C	ZT
Phenanthrene	5.00		ND	mg/kg	10	8/25/15	EPA 8270C	ZT
Pyrene	5.00		ND	mg/kg	10	8/25/15	EPA 8270C	ZT
1,2,4-Trichlorobenzene	5.00		ND	mg/kg	10	8/25/15	EPA 8270C	ZT
4-Chloro-3-methylphenol	5.00		ND	mg/kg	10	8/25/15	EPA 8270C	ZT
2-Chlorophenol	5.00		ND	mg/kg	10	8/25/15	EPA 8270C	ZT
2,4-Dichlorophenol	5.00		ND	mg/kg	10	8/25/15	EPA 8270C	ZT

The contents of this report apply to the sample(s) analyzed in accordance with the chain of custody document.
No duplication of this report is allowed, except in its entirety.

685 Stone Road #11 & 12 • Benicia, CA 94510 • (707) 747-6081 • (800) 747-6082 • Fax (707) 747-6082

WORK ORDER: 1508026 **COC Number:** 22984

Valero
3400 East Second St
Benicia, CA 94510

Project: Waste Management Department
PO Number: 4503183370
Project Manager: John Lazorik

Sample Results
(Continued)

Sample: 72" Line South Side Mid (Continued)
1508026-02 (Solid) **Sample Type:** Grab
Batch: 15H0077 **Sample Date:** August 18, 2015 0:00 **Prep Date:** August 21, 2015 13:59

Analyte	Reporting Limit	Qual	Result	Unit	Dilution Factor	Date Analyzed	Method	Analyst
Semi-Volatile Organic Compounds by EPA 8270 (Continued)								
2,4-Dimethylphenol	5.00		ND	mg/kg	10	8/25/15	EPA 8270C	ZT
4,6-Dinitro-2-methylphenol	5.00		ND	mg/kg	10	8/25/15	EPA 8270C	ZT
2,4-Dinitrophenol	10.0		ND	mg/kg	10	8/25/15	EPA 8270C	ZT
2-Methylphenol	5.00		ND	mg/kg	10	8/25/15	EPA 8270C	ZT
4-Methylphenol	5.00		ND	mg/kg	10	8/25/15	EPA 8270C	ZT
2-Nitrophenol	5.00		ND	mg/kg	10	8/25/15	EPA 8270C	ZT
4-Nitrophenol	5.00		ND	mg/kg	10	8/25/15	EPA 8270C	ZT
Pentachlorophenol	5.00		ND	mg/kg	10	8/25/15	EPA 8270C	ZT
Phenol	5.00		ND	mg/kg	10	8/25/15	EPA 8270C	ZT
2,4,5-Trichlorophenol	5.00		ND	mg/kg	10	8/25/15	EPA 8270C	ZT
2,4,6-Trichlorophenol	5.00		ND	mg/kg	10	8/25/15	EPA 8270C	ZT
3-Methylphenol	5.00		ND	mg/kg	10	8/25/15	EPA 8270C	ZT
Surrogate: 2-Fluorophenol	*60-125*		*67.5%*			*8/25/15*	*EPA 8270C*	ZT
Surrogate: Phenol-d6	*54-134*		*57.2%*			*8/25/15*	*EPA 8270C*	ZT
Surrogate: Nitrobenzene-d5	*59-141*		*63.3%*			*8/25/15*	*EPA 8270C*	ZT
Surrogate: 2-Fluorobiphenyl	*60-127*		*89.7%*			*8/25/15*	*EPA 8270C*	ZT
Surrogate: 2,4,6-Tribromophenol	*43-151*		*51.0%*			*8/25/15*	*EPA 8270C*	ZT
Surrogate: p-Terphenyl-d14	*39-166*		*75.7%*			*8/25/15*	*EPA 8270C*	ZT
Total Metals by EPA 6010B (ICP-AES)								
Antimony	2.50		ND	mg/kg	10	8/20/15	EPA 6010	ZT
Arsenic	2.00		**5.52**	mg/kg	4	8/20/15	EPA 6010	ZT
Barium	2.50		**64.5**	mg/kg	10	8/20/15	EPA 6010	ZT
Beryllium	2.50		ND	mg/kg	10	8/20/15	EPA 6010	ZT

The contents of this report apply to the sample(s) analyzed in accordance with the chain of custody document.
No duplication of this report is allowed, except in its entirety.

685 Stone Road #11 & 12 • Benicia, CA 94510 • (707) 747-6081 • (800) 747-6082 • Fax (707) 747-6082

WORK ORDER: 1508026 **COC Number:** 22984

Valero
3400 East Second St
Benicia, CA 94510

Project: Waste Management Department
PO Number: 4503183370
Project Manager: John Lazorik

Sample Results
(Continued)

Sample: 72" Line South Side Mid (Continued)
1508026-02 (Solid) **Sample Type:** Grab
Batch: 15H0075 **Sample Date:** August 18, 2015 0:00 **Prep Date:** August 20, 2015 9:05

Analyte	Reporting Limit	Qual	Result	Unit	Dilution Factor	Date Analyzed	Method	Analyst
Total Metals by EPA 6010B (ICP-AES) (Continued)								
Cadmium	2.50		ND	mg/kg	10	8/20/15	EPA 6010	ZT
Chromium	1.00		**263**	mg/kg	4	8/20/15	EPA 6010	ZT
Cobalt	2.50		**9.00**	mg/kg	10	8/20/15	EPA 6010	ZT
Copper	2.50		**46.3**	mg/kg	10	8/20/15	EPA 6010	ZT
Lead	1.00		**239**	mg/kg	4	8/20/15	EPA 6010	ZT
Mercury	0.0880		**2.14**	mg/kg	5	8/25/15	EPA 7471	ZT
Molybdenum	2.50		**42.4**	mg/kg	10	8/20/15	EPA 6010	ZT
Nickel	1.00		**188**	mg/kg	4	8/20/15	EPA 6010	ZT
Selenium	2.00		**25.4**	mg/kg	4	8/20/15	EPA 6010	ZT
Silver	2.50		ND	mg/kg	10	8/20/15	EPA 6010	ZT
Thallium	10.0		**19.2**	mg/kg	10	8/20/15	EPA 6010	ZT
Vanadium	2.50		**50.0**	mg/kg	10	8/20/15	EPA 6010	ZT
Zinc	2.50		**279**	mg/kg	10	8/20/15	EPA 6010	ZT
TCLP Metals								
Chromium	0.0500		ND	mg/L	1	8/28/15	EPA 6010	ZT
Nickel	0.0500		**0.207**	mg/L	1	8/28/15	EPA 6010	ZT
Wet Chemistry								
Cyanide, Total	0.00500		**0.0454**	mg/kg	1	8/26/15	SM 4500 CN- C,E	AM
Reactive Sulfide	0.101		**1.03**	mg/kg	1	8/21/15	SW 846 Ch. 7.3.4.1	AM

The contents of this report apply to the sample(s) analyzed in accordance with the chain of custody document.
No duplication of this report is allowed, except in its entirety.

685 Stone Road #11 & 12 • Benicia, CA 94510 • (707) 747-6081 • (800) 747-6082 • Fax (707) 747-6082

WORK ORDER: 1508026 **COC Number:** 22984

Valero
3400 East Second St
Benicia, CA 94510

Project: Waste Management Department
PO Number: 4503183370
Project Manager: John Lazorik

Sample Results
(Continued)

Sample: 72" Line South Lower
1508026-03 (Solid) **Sample Type:** Grab
Batch: 15H0080 **Sample Date:** August 18, 2015 0:00 **Prep Date:** August 21, 2015 16:27

Analyte	Reporting Limit	Qual	Result	Unit	Dilution Factor	Date Analyzed	Method	Analyst
Volatile Organic Compounds by EPA 8260								
Benzene	0.00050		ND	mg/kg	1	8/21/15	EPA 8260 B	AM
Bromobenzene	0.00050		ND	mg/kg	1	8/21/15	EPA 8260 B	AM
Bromochloromethane	0.00050		ND	mg/kg	1	8/21/15	EPA 8260 B	AM
Bromodichloromethane	0.00050		ND	mg/kg	1	8/21/15	EPA 8260 B	AM
Bromoform	0.00050		ND	mg/kg	1	8/21/15	EPA 8260 B	AM
Bromomethane	0.00050		ND	mg/kg	1	8/21/15	EPA 8260 B	AM
n-Butylbenzene	0.125		**14.9**	mg/kg	250	8/21/15	EPA 8260 B	AM
sec-Butylbenzene	0.125		**10.6**	mg/kg	250	8/21/15	EPA 8260 B	AM
tert-Butylbenzene	0.00050		ND	mg/kg	1	8/21/15	EPA 8260 B	AM
Carbon Tetrachloride	0.00050		ND	mg/kg	1	8/21/15	EPA 8260 B	AM
Chlorobenzene	0.00050		ND	mg/kg	1	8/21/15	EPA 8260 B	AM
Chloroethane	0.00050		ND	mg/kg	1	8/21/15	EPA 8260 B	AM
Chloroform	0.00050		ND	mg/kg	1	8/21/15	EPA 8260 B	AM
Chloromethane	0.00050		ND	mg/kg	1	8/21/15	EPA 8260 B	AM
2-Chlorotoluene	0.00050		ND	mg/kg	1	8/21/15	EPA 8260 B	AM
4-Chlorotoluene	0.00050		ND	mg/kg	1	8/21/15	EPA 8260 B	AM
Dibromochloromethane	0.00050		ND	mg/kg	1	8/21/15	EPA 8260 B	AM
1,2-Dibromo-3-chloropropane	0.00050		ND	mg/kg	1	8/21/15	EPA 8260 B	AM
1,2-Dibromoethane	0.00050		ND	mg/kg	1	8/21/15	EPA 8260 B	AM
Dibromomethane	0.00050		ND	mg/kg	1	8/21/15	EPA 8260 B	AM
1,2-Dichlorobenzene	0.00050		ND	mg/kg	1	8/21/15	EPA 8260 B	AM
1,3-Dichlorobenzene	0.00050		ND	mg/kg	1	8/21/15	EPA 8260 B	AM
1,4-Dichlorobenzene	0.00050		ND	mg/kg	1	8/21/15	EPA 8260 B	AM
Dichlorodifluoromethane	0.00050		ND	mg/kg	1	8/21/15	EPA 8260 B	AM

The contents of this report apply to the sample(s) analyzed in accordance with the chain of custody document.
No duplication of this report is allowed, except in its entirety.

685 Stone Road #11 & 12 • Benicia, CA 94510 • (707) 747-6081 • (800) 747-6082 • Fax (707) 747-6082

WORK ORDER: 1508026 **COC Number:** 22984

Valero
3400 East Second St
Benicia, CA 94510

Project: Waste Management Department
PO Number: 4503183370
Project Manager: John Lazorik

Sample Results
(Continued)

Sample: 72" Line South Lower (Continued)
1508026-03 (Solid) **Sample Type:** Grab
Batch: 15H0080 **Sample Date:** August 18, 2015 0:00 **Prep Date:** August 21, 2015 16:27

Analyte	Reporting Limit	Qual	Result	Unit	Dilution Factor	Date Analyzed	Method	Analyst
Volatile Organic Compounds by EPA 8260 (Continued)								
1,1-Dichloroethane	0.00050		ND	mg/kg	1	8/21/15	EPA 8260 B	AM
1,2-Dichloroethane	0.00050		ND	mg/kg	1	8/21/15	EPA 8260 B	AM
1,1-Dichloroethene	0.00050		ND	mg/kg	1	8/21/15	EPA 8260 B	AM
cis-1,2-Dichloroethene	0.00050		ND	mg/kg	1	8/21/15	EPA 8260 B	AM
trans-1,2-Dichloroethene	0.00050		ND	mg/kg	1	8/21/15	EPA 8260 B	AM
1,2-Dichloropropane	0.00050		ND	mg/kg	1	8/21/15	EPA 8260 B	AM
1,3-Dichloropropane	0.00050		ND	mg/kg	1	8/21/15	EPA 8260 B	AM
2,2-Dichloropropane	0.00050		ND	mg/kg	1	8/21/15	EPA 8260 B	AM
1,1-Dichloropropene	0.00050		ND	mg/kg	1	8/21/15	EPA 8260 B	AM
Ethylbenzene	0.00050		ND	mg/kg	1	8/21/15	EPA 8260 B	AM
Hexachlorobutadiene	0.00050		ND	mg/kg	1	8/21/15	EPA 8260 B	AM
Isopropylbenzene	0.125		**5.46**	mg/kg	250	8/21/15	EPA 8260 B	AM
p-Isopropyltoluene	0.00050		ND	mg/kg	1	8/21/15	EPA 8260 B	AM
Methylene Chloride	0.00100		ND	mg/kg	1	8/21/15	EPA 8260 B	AM
Naphthalene	0.125		**24.2**	mg/kg	250	8/21/15	EPA 8260 B	AM
n-Propylbenzene	0.125		**14.9**	mg/kg	250	8/21/15	EPA 8260 B	AM
Styrene	0.00050		ND	mg/kg	1	8/21/15	EPA 8260 B	AM
1,1,1,2-Tetrachloroethane	0.00050		ND	mg/kg	1	8/21/15	EPA 8260 B	AM
1,1,2,2-Tetrachloroethane	0.00050		ND	mg/kg	1	8/21/15	EPA 8260 B	AM
Tetrachloroethene	0.00050		ND	mg/kg	1	8/21/15	EPA 8260 B	AM
Toluene	0.00050		ND	mg/kg	1	8/21/15	EPA 8260 B	AM
1,2,3-Trichlorobenzene	0.00050		ND	mg/kg	1	8/21/15	EPA 8260 B	AM
1,2,4-Trichlorobenzene	0.00050		ND	mg/kg	1	8/21/15	EPA 8260 B	AM
1,1,1-Trichloroethane	0.00050		ND	mg/kg	1	8/21/15	EPA 8260 B	AM

The contents of this report apply to the sample(s) analyzed in accordance with the chain of custody document.
No duplication of this report is allowed, except in its entirety.

685 Stone Road #11 & 12 • Benicia, CA 94510 • (707) 747-6081 • (800) 747-6082 • Fax (707) 747-6082

WORK ORDER: 1508026 **COC Number:** 22984

Valero
3400 East Second St
Benicia, CA 94510

Project: Waste Management Department
PO Number: 4503183370
Project Manager: John Lazorik

Sample Results
(Continued)

Sample: 72" Line South Lower (Continued)
1508026-03 (Solid) **Sample Type:** Grab
Batch: 15H0080 **Sample Date:** August 18, 2015 0:00 **Prep Date:** August 21, 2015 16:27

Analyte	Reporting Limit	Qual	Result	Unit	Dilution Factor	Date Analyzed	Method	Analyst
Volatile Organic Compounds by EPA 8260 (Continued)								
1,1,2-Trichloroethane	0.00050		ND	mg/kg	1	8/21/15	EPA 8260 B	AM
Trichloroethene	0.00050		ND	mg/kg	1	8/21/15	EPA 8260 B	AM
Trichlorofluoromethane	0.00050		ND	mg/kg	1	8/21/15	EPA 8260 B	AM
1,2,3-Trichloropropane, TCP	0.00050		ND	mg/kg	1	8/21/15	EPA 8260 B	AM
1,2,4-Trimethylbenzene	0.00050		ND	mg/kg	1	8/21/15	EPA 8260 B	AM
1,3,5-Trimethylbenzene	0.00050		ND	mg/kg	1	8/21/15	EPA 8260 B	AM
Vinyl Chloride	0.00050		ND	mg/kg	1	8/21/15	EPA 8260 B	AM
o-Xylene	0.00050		ND	mg/kg	1	8/21/15	EPA 8260 B	AM
m,p-Xylenes	0.00100		ND	mg/kg	1	8/21/15	EPA 8260 B	AM
cis-1,3-Dichloropropene	0.00050		ND	mg/kg	1	8/21/15	EPA 8260 B	AM
trans-1,3-Dichloropropene	0.00050		ND	mg/kg	1	8/21/15	EPA 8260 B	AM
Methyl-tert-butyl ether (MTBE)	0.00050		ND	mg/kg	1	8/21/15	EPA 8260 B	AM
Surrogate: Dibromofluoromethane	*70-130*		*105%*			*8/21/15*	*EPA 8260 B*	AM
Surrogate: Toluene-d8	*70-130*		*120%*			*8/21/15*	*EPA 8260 B*	AM
Surrogate: 4-Bromofluorobenzene	*70-130*		*98.9%*			*8/21/15*	*EPA 8260 B*	AM
Semi-Volatile Organic Compounds by EPA 8270								
Acenaphthene	2.50		ND	mg/kg	5	8/25/15	EPA 8270C	ZT
Acenaphthylene	2.50		ND	mg/kg	5	8/25/15	EPA 8270C	ZT
Anthracene	2.50		ND	mg/kg	5	8/25/15	EPA 8270C	ZT
Benzidine	10.0		ND	mg/kg	5	8/25/15	EPA 8270C	ZT
Benzoic Acid	10.0		ND	mg/kg	5	8/25/15	EPA 8270C	ZT
Benzo (a) anthracene	2.50		ND	mg/kg	5	8/25/15	EPA 8270C	ZT
Benzo (b) fluoranthene	2.50		ND	mg/kg	5	8/25/15	EPA 8270C	ZT

The contents of this report apply to the sample(s) analyzed in accordance with the chain of custody document.
No duplication of this report is allowed, except in its entirety.

685 Stone Road #11 & 12 • Benicia, CA 94510 • (707) 747-6081 • (800) 747-6082 • Fax (707) 747-6082

WORK ORDER: 1508026 **COC Number:** 22984

Valero
3400 East Second St
Benicia, CA 94510

Project: Waste Management Department
PO Number: 4503183370
Project Manager: John Lazorik

Sample Results
(Continued)

Sample: 72" Line South Lower (Continued)
1508026-03 (Solid) **Sample Type:** Grab
Batch: 15H0077 **Sample Date:** August 18, 2015 0:00 **Prep Date:** August 21, 2015 13:59

Analyte	Reporting Limit	Qual	Result	Unit	Dilution Factor	Date Analyzed	Method	Analyst
Semi-Volatile Organic Compounds by EPA 8270 (Continued)								
Benzo (k) fluoranthene	2.50		ND	mg/kg	5	8/25/15	EPA 8270C	ZT
Benzo (g,h,i) perylene	2.50		ND	mg/kg	5	8/25/15	EPA 8270C	ZT
Benzo (a) pyrene	2.50		ND	mg/kg	5	8/25/15	EPA 8270C	ZT
Benzyl Alcohol	2.50		ND	mg/kg	5	8/25/15	EPA 8270C	ZT
Bis (2-chloroethoxy) methane	2.50		ND	mg/kg	5	8/25/15	EPA 8270C	ZT
Bis (2-choroethyl) Ether	2.50		ND	mg/kg	5	8/25/15	EPA 8270C	ZT
Bis (2-chloroisopropyl) Ether	2.50		ND	mg/kg	5	8/25/15	EPA 8270C	ZT
Bis (2-ethylhexy) Phthalate	5.00	J	**4.16**	mg/kg	5	8/25/15	EPA 8270C	ZT
4-Bromophenyl Phenyl Ether	2.50		ND	mg/kg	5	8/25/15	EPA 8270C	ZT
Butylbenzyl Phthalate	2.50		ND	mg/kg	5	8/25/15	EPA 8270C	ZT
4-Chloroaniline	2.50		ND	mg/kg	5	8/25/15	EPA 8270C	ZT
2-Chloronaphthalene	2.50		ND	mg/kg	5	8/25/15	EPA 8270C	ZT
4-Chlorophenyl Phenyl Ether	2.50		ND	mg/kg	5	8/25/15	EPA 8270C	ZT
Chrysene	2.50		**3.09**	mg/kg	5	8/25/15	EPA 8270C	ZT
Dibenzo (a,h) anthracene	2.50		ND	mg/kg	5	8/25/15	EPA 8270C	ZT
Dibenzofuran	2.50		ND	mg/kg	5	8/25/15	EPA 8270C	ZT
Di-n-butyl Phthalate	2.50		ND	mg/kg	5	8/25/15	EPA 8270C	ZT
1,2-Dichlorobenzene	2.50		ND	mg/kg	5	8/25/15	EPA 8270C	ZT
1,3-Dichlorobenzene	2.50		ND	mg/kg	5	8/25/15	EPA 8270C	ZT
1,4-Dichlorobenzene	2.50		ND	mg/kg	5	8/25/15	EPA 8270C	ZT
3,3'-Dichlorobenzidine	5.00		ND	mg/kg	5	8/25/15	EPA 8270C	ZT
Diethyl Phthalate	2.50		ND	mg/kg	5	8/25/15	EPA 8270C	ZT
Dimethyl Phthalate	2.50		ND	mg/kg	5	8/25/15	EPA 8270C	ZT
2,4-Dinitrotoluene	2.50		ND	mg/kg	5	8/25/15	EPA 8270C	ZT

The contents of this report apply to the sample(s) analyzed in accordance with the chain of custody document.
No duplication of this report is allowed, except in its entirety.

685 Stone Road #11 & 12 • Benicia, CA 94510 • (707) 747-6081 • (800) 747-6082 • Fax (707) 747-6082

WORK ORDER: 1508026 **COC Number:** 22984

Valero
3400 East Second St
Benicia, CA 94510

Project: Waste Management Department
PO Number: 4503183370
Project Manager: John Lazorik

Sample Results
(Continued)

Sample: 72" Line South Lower (Continued)
1508026-03 (Solid) **Sample Type:** Grab
Batch: 15H0077 **Sample Date:** August 18, 2015 0:00 **Prep Date:** August 21, 2015 13:59

Analyte	Reporting Limit	Qual	Result	Unit	Dilution Factor	Date Analyzed	Method	Analyst
Semi-Volatile Organic Compounds by EPA 8270 (Continued)								
2,6-Dinitrotoluene	2.50		ND	mg/kg	5	8/25/15	EPA 8270C	ZT
Di-n-octyl Phthalate	2.50		ND	mg/kg	5	8/25/15	EPA 8270C	ZT
Fluoranthene	2.50		ND	mg/kg	5	8/25/15	EPA 8270C	ZT
Fluorene	2.50		**14.0**	mg/kg	5	8/25/15	EPA 8270C	ZT
Hexachlorobenzene	2.50		ND	mg/kg	5	8/25/15	EPA 8270C	ZT
Hexachlorobutadiene	2.50		ND	mg/kg	5	8/25/15	EPA 8270C	ZT
Hexachlorocyclopentadiene	2.50		ND	mg/kg	5	8/25/15	EPA 8270C	ZT
Hexachloroethane	2.50		ND	mg/kg	5	8/25/15	EPA 8270C	ZT
Indeno (1,2,3-cd) pyrene	2.50		ND	mg/kg	5	8/25/15	EPA 8270C	ZT
Isophorone	2.50		ND	mg/kg	5	8/25/15	EPA 8270C	ZT
2-Methylnaphthalene	2.50		**36.0**	mg/kg	5	8/25/15	EPA 8270C	ZT
Naphthalene	2.50		**21.1**	mg/kg	5	8/25/15	EPA 8270C	ZT
2-Nitroaniline	2.50		ND	mg/kg	5	8/25/15	EPA 8270C	ZT
3-Nitroaniline	2.50		ND	mg/kg	5	8/25/15	EPA 8270C	ZT
4-Nitroaniline	2.50		ND	mg/kg	5	8/25/15	EPA 8270C	ZT
Nitrobenzene	2.50		ND	mg/kg	5	8/25/15	EPA 8270C	ZT
N-Nitrosodiphenylamine	2.50		ND	mg/kg	5	8/25/15	EPA 8270C	ZT
N-Nitrosodi-n-propylamine	2.50		ND	mg/kg	5	8/25/15	EPA 8270C	ZT
Phenanthrene	2.50		**25.7**	mg/kg	5	8/25/15	EPA 8270C	ZT
Pyrene	2.50		**9.76**	mg/kg	5	8/25/15	EPA 8270C	ZT
1,2,4-Trichlorobenzene	2.50		ND	mg/kg	5	8/25/15	EPA 8270C	ZT
4-Chloro-3-methylphenol	2.50		ND	mg/kg	5	8/25/15	EPA 8270C	ZT
2-Chlorophenol	2.50		ND	mg/kg	5	8/25/15	EPA 8270C	ZT
2,4-Dichlorophenol	2.50		ND	mg/kg	5	8/25/15	EPA 8270C	ZT

The contents of this report apply to the sample(s) analyzed in accordance with the chain of custody document.
No duplication of this report is allowed, except in its entirety.

685 Stone Road #11 & 12 • Benicia, CA 94510 • (707) 747-6081 • (800) 747-6082 • Fax (707) 747-6082

WORK ORDER: 1508026 **COC Number:** 22984

Valero
3400 East Second St
Benicia, CA 94510

Project: Waste Management Department
PO Number: 4503183370
Project Manager: John Lazorik

Sample Results
(Continued)

Sample: 72" Line South Lower (Continued)
1508026-03 (Solid) **Sample Type:** Grab
Batch: 15H0077 **Sample Date:** August 18, 2015 0:00 **Prep Date:** August 21, 2015 13:59

Analyte	Reporting Limit	Qual	Result	Unit	Dilution Factor	Date Analyzed	Method	Analyst
Semi-Volatile Organic Compounds by EPA 8270 (Continued)								
2,4-Dimethylphenol	2.50		ND	mg/kg	5	8/25/15	EPA 8270C	ZT
4,6-Dinitro-2-methylphenol	2.50		ND	mg/kg	5	8/25/15	EPA 8270C	ZT
2,4-Dinitrophenol	5.00		ND	mg/kg	5	8/25/15	EPA 8270C	ZT
2-Methylphenol	2.50		ND	mg/kg	5	8/25/15	EPA 8270C	ZT
4-Methylphenol	2.50		ND	mg/kg	5	8/25/15	EPA 8270C	ZT
2-Nitrophenol	2.50		ND	mg/kg	5	8/25/15	EPA 8270C	ZT
4-Nitrophenol	2.50		ND	mg/kg	5	8/25/15	EPA 8270C	ZT
Pentachlorophenol	2.50		ND	mg/kg	5	8/25/15	EPA 8270C	ZT
Phenol	2.50		ND	mg/kg	5	8/25/15	EPA 8270C	ZT
2,4,5-Trichlorophenol	2.50		ND	mg/kg	5	8/25/15	EPA 8270C	ZT
2,4,6-Trichlorophenol	2.50		ND	mg/kg	5	8/25/15	EPA 8270C	ZT
3-Methylphenol	2.50		ND	mg/kg	5	8/25/15	EPA 8270C	ZT
Surrogate: 2-Fluorophenol	*60-125*		*63.9%*			*8/25/15*	*EPA 8270C*	ZT
Surrogate: Phenol-d6	*54-134*		*74.0%*			*8/25/15*	*EPA 8270C*	ZT
Surrogate: Nitrobenzene-d5	*59-141*		*102%*			*8/25/15*	*EPA 8270C*	ZT
Surrogate: 2-Fluorobiphenyl	*60-127*		*78.5%*			*8/25/15*	*EPA 8270C*	ZT
Surrogate: 2,4,6-Tribromophenol	*43-151*		*49.8%*			*8/25/15*	*EPA 8270C*	ZT
Surrogate: p-Terphenyl-d14	*39-166*		*86.0%*			*8/25/15*	*EPA 8270C*	ZT
Total Metals by EPA 6010B (ICP-AES)								
Antimony	1.25		ND	mg/kg	5	8/20/15	EPA 6010	ZT
Arsenic	2.50		**22.7**	mg/kg	5	8/20/15	EPA 6010	ZT
Barium	1.25		**58.0**	mg/kg	5	8/20/15	EPA 6010	ZT
Beryllium	1.25		ND	mg/kg	5	8/20/15	EPA 6010	ZT

The contents of this report apply to the sample(s) analyzed in accordance with the chain of custody document.
No duplication of this report is allowed, except in its entirety.

685 Stone Road #11 & 12 • Benicia, CA 94510 • (707) 747-6081 • (800) 747-6082 • Fax (707) 747-6082

WORK ORDER: 1508026 **COC Number:** 22984

Valero
3400 East Second St
Benicia, CA 94510

Project: Waste Management Department
PO Number: 4503183370
Project Manager: John Lazorik

Sample Results
(Continued)

Sample: 72" Line South Lower (Continued)
1508026-03 (Solid) **Sample Type:** Grab
Batch: 15H0075 **Sample Date:** August 18, 2015 0:00 **Prep Date:** August 20, 2015 9:05

Analyte	Reporting Limit	Qual	Result	Unit	Dilution Factor	Date Analyzed	Method	Analyst
Total Metals by EPA 6010B (ICP-AES) (Continued)								
Cadmium	1.25		ND	mg/kg	5	8/20/15	EPA 6010	ZT
Chromium	1.25		**31.0**	mg/kg	5	8/20/15	EPA 6010	ZT
Cobalt	1.25		**3.20**	mg/kg	5	8/20/15	EPA 6010	ZT
Copper	1.25		**30.2**	mg/kg	5	8/20/15	EPA 6010	ZT
Lead	1.25		**16.6**	mg/kg	5	8/20/15	EPA 6010	ZT
Mercury	0.0171		**0.603**	mg/kg	1	8/25/15	EPA 7471	ZT
Molybdenum	1.25		**6.30**	mg/kg	5	8/20/15	EPA 6010	ZT
Nickel	1.25		**51.8**	mg/kg	5	8/20/15	EPA 6010	ZT
Selenium	2.50		**16.7**	mg/kg	5	8/20/15	EPA 6010	ZT
Silver	1.25		ND	mg/kg	5	8/20/15	EPA 6010	ZT
Thallium	5.00		**11.2**	mg/kg	5	8/20/15	EPA 6010	ZT
Vanadium	1.25		**56.5**	mg/kg	5	8/20/15	EPA 6010	ZT
Zinc	1.25		**66.5**	mg/kg	5	8/20/15	EPA 6010	ZT
TCLP Metals								
Chromium	0.0500		ND	mg/L	1	8/28/15	EPA 6010	ZT
Nickel	0.0500		**0.136**	mg/L	1	8/28/15	EPA 6010	ZT
Wet Chemistry								
Cyanide, Total	0.00500		**0.0667**	mg/kg	1	8/26/15	SM 4500 CN- C,E	AM
Reactive Sulfide	0.100		**1.12**	mg/kg	1	8/21/15	SW 846 Ch. 7.3.4.1	AM

The contents of this report apply to the sample(s) analyzed in accordance with the chain of custody document.
No duplication of this report is allowed, except in its entirety.

685 Stone Road #11 & 12 • Benicia, CA 94510 • (707) 747-6081 • (800) 747-6082 • Fax (707) 747-6082

WORK ORDER: 1508026 **COC Number:** 22984

Valero
3400 East Second St
Benicia, CA 94510

Project: Waste Management Department
PO Number: 4503183370
Project Manager: John Lazorik

Quality Control

Volatile Organic Compounds by EPA 8260

Prepared & Analyzed: Aug-21-15

Analyte	Source Result	Result	Qual	Reporting Limit	Unit	Spike Level	% REC	%REC Limits	RPD	RPD Limit
Batch: 15H0080										**Analyst:** AM
Blank (15H0080-BLK1)										
Benzene		**ND**		0.00050	mg/kg					
Bromobenzene		**ND**		0.00050	mg/kg					
Bromochloromethane		**ND**		0.00050	mg/kg					
Bromodichloromethane		**ND**		0.00050	mg/kg					
Bromoform		**ND**		0.00050	mg/kg					
Bromomethane		**ND**		0.00050	mg/kg					
n-Butylbenzene		**ND**		0.00050	mg/kg					
sec-Butylbenzene		**ND**		0.00050	mg/kg					
tert-Butylbenzene		**ND**		0.00050	mg/kg					
Carbon Tetrachloride		**ND**		0.00050	mg/kg					
Chlorobenzene		**ND**		0.00050	mg/kg					
Chloroethane		**ND**		0.00050	mg/kg					
Chloroform		**ND**		0.00050	mg/kg					
Chloromethane		**ND**		0.00050	mg/kg					
2-Chlorotoluene		**ND**		0.00050	mg/kg					
4-Chlorotoluene		**ND**		0.00050	mg/kg					
Dibromochloromethane		**ND**		0.00050	mg/kg					
1,2-Dibromo-3-chloropropane		**ND**		0.00050	mg/kg					
1,2-Dibromoethane		**ND**		0.00050	mg/kg					
Dibromomethane		**ND**		0.00050	mg/kg					
1,2-Dichlorobenzene		**ND**		0.00050	mg/kg					
1,3-Dichlorobenzene		**ND**		0.00050	mg/kg					
1,4-Dichlorobenzene		**ND**		0.00050	mg/kg					
Dichlorodifluoromethane		**ND**		0.00050	mg/kg					
1,1-Dichloroethane		**ND**		0.00050	mg/kg					
1,2-Dichloroethane		**ND**		0.00050	mg/kg					
1,1-Dichloroethene		**ND**		0.00050	mg/kg					
cis-1,2-Dichloroethene		**ND**		0.00050	mg/kg					
trans-1,2-Dichloroethene		**ND**		0.00050	mg/kg					
1,2-Dichloropropane		**ND**		0.00050	mg/kg					
1,3-Dichloropropane		**ND**		0.00050	mg/kg					
2,2-Dichloropropane		**ND**		0.00050	mg/kg					

The contents of this report apply to the sample(s) analyzed in accordance with the chain of custody document.
No duplication of this report is allowed, except in its entirety.

685 Stone Road #11 & 12 • Benicia, CA 94510 • (707) 747-6081 • (800) 747-6082 • Fax (707) 747-6082

WORK ORDER: 1508026 **COC Number:** 22984

Valero
3400 East Second St
Benicia, CA 94510

Project: Waste Management Department
PO Number: 4503183370
Project Manager: John Lazorik

Quality Control
(Continued)

Volatile Organic Compounds by EPA 8260 (Continued)

Prepared & Analyzed: Aug-21-15

Analyte	Source Result	Result	Qual	Reporting Limit	Unit	Spike Level	% REC	%REC Limits	RPD	RPD Limit
Batch: 15H0080 (Continued)										**Analyst:** AM
Blank (15H0080-BLK1)										
1,1-Dichloropropene		**ND**		0.00050	mg/kg					
Ethylbenzene		**ND**		0.00050	mg/kg					
Hexachlorobutadiene		**ND**		0.00050	mg/kg					
Isopropylbenzene		**ND**		0.00050	mg/kg					
p-Isopropyltoluene		**ND**		0.00050	mg/kg					
Methylene Chloride		**ND**		0.00100	mg/kg					
Naphthalene		**ND**		0.00050	mg/kg					
n-Propylbenzene		**ND**		0.00050	mg/kg					
Styrene		**ND**		0.00050	mg/kg					
1,1,1,2-Tetrachloroethane		**ND**		0.00050	mg/kg					
1,1,2,2-Tetrachloroethane		**ND**		0.00050	mg/kg					
Tetrachloroethene		**ND**		0.00050	mg/kg					
Toluene		**ND**		0.00050	mg/kg					
1,2,3-Trichlorobenzene		**ND**		0.00050	mg/kg					
1,2,4-Trichlorobenzene		**ND**		0.00050	mg/kg					
1,1,1-Trichloroethane		**ND**		0.00050	mg/kg					
1,1,2-Trichloroethane		**ND**		0.00050	mg/kg					
Trichloroethene		**ND**		0.00050	mg/kg					
Trichlorofluoromethane		**ND**		0.00050	mg/kg					
1,2,3-Trichloropropane, TCP		**ND**		0.00050	mg/kg					
1,2,4-Trimethylbenzene		**ND**		0.00050	mg/kg					
1,3,5-Trimethylbenzene		**ND**		0.00050	mg/kg					
Vinyl Chloride		**ND**		0.00050	mg/kg					
o-Xylene		**ND**		0.00050	mg/kg					
m,p-Xylenes		**ND**		0.00100	mg/kg					
cis-1,3-Dichloropropene		**ND**		0.00050	mg/kg					
trans-1,3-Dichloropropene		**ND**		0.00050	mg/kg					
Methyl-tert-butyl ether (MTBE)		**ND**		0.00050	mg/kg					
Surrogate: Dibromofluoromethane		*0.0209*			*mg/kg*	*0.0200*	*105*	*70-130*		
Surrogate: Toluene-d8		*0.0189*			*mg/kg*	*0.0200*	*94.4*	*70-130*		
Surrogate: 4-Bromofluorobenzene		*0.0194*			*mg/kg*	*0.0200*	*97.0*	*70-130*		

The contents of this report apply to the sample(s) analyzed in accordance with the chain of custody document.
No duplication of this report is allowed, except in its entirety.

685 Stone Road #11 & 12 • Benicia, CA 94510 • (707) 747-6081 • (800) 747-6082 • Fax (707) 747-6082

WORK ORDER: 1508026 **COC Number:** 22984

Valero
3400 East Second St
Benicia, CA 94510

Project: Waste Management Department
PO Number: 4503183370
Project Manager: John Lazorik

Quality Control
(Continued)

Volatile Organic Compounds by EPA 8260 (Continued)

Prepared & Analyzed: Aug-21-15

Batch: 15H0080 (Continued) **Analyst:** AM

LCS (15H0080-BS1)

Analyte	Source Result	Result	Qual	Reporting Limit	Unit	Spike Level	% REC	%REC Limits	RPD	RPD Limit
Benzene		**0.0226**		0.00050	mg/kg	0.0200	113	80-120		
Chlorobenzene		**0.0226**		0.00050	mg/kg	0.0200	113	80-120		
1,1-Dichloroethene		**0.0234**		0.00050	mg/kg	0.0200	117	80-120		
Toluene		**0.0214**		0.00050	mg/kg	0.0200	107	80-120		
Trichloroethene		**0.0221**		0.00050	mg/kg	0.0200	110	80-120		
Surrogate: Dibromofluoromethane		*0.0212*			*mg/kg*	*0.0200*	*106*	*70-130*		
Surrogate: Toluene-d8		*0.0195*			*mg/kg*	*0.0200*	*97.6*	*70-130*		
Surrogate: 4-Bromofluorobenzene		*0.0213*			*mg/kg*	*0.0200*	*106*	*70-130*		

LCS Dup (15H0080-BSD1)

Benzene		**0.0221**		0.00050	mg/kg	0.0200	110	80-120	2.11	20
Chlorobenzene		**0.0213**		0.00050	mg/kg	0.0200	106	80-120	5.98	20
1,1-Dichloroethene		**0.0205**		0.00050	mg/kg	0.0200	103	80-120	12.9	20
Toluene		**0.0207**		0.00050	mg/kg	0.0200	103	80-120	3.56	20
Trichloroethene		**0.0209**		0.00050	mg/kg	0.0200	104	80-120	5.68	20
Surrogate: Dibromofluoromethane		*0.0209*			*mg/kg*	*0.0200*	*104*	*70-130*		
Surrogate: Toluene-d8		*0.0202*			*mg/kg*	*0.0200*	*101*	*70-130*		
Surrogate: 4-Bromofluorobenzene		*0.0215*			*mg/kg*	*0.0200*	*107*	*70-130*		

The contents of this report apply to the sample(s) analyzed in accordance with the chain of custody document.
No duplication of this report is allowed, except in its entirety.

685 Stone Road #11 & 12 • Benicia, CA 94510 • (707) 747-6081 • (800) 747-6082 • Fax (707) 747-6082

WORK ORDER: 1508026 **COC Number:** 22984

Valero
3400 East Second St
Benicia, CA 94510

Project: Waste Management Department
PO Number: 4503183370
Project Manager: John Lazorik

Quality Control
(Continued)

Semi-Volatile Organic Compounds by EPA 8270 **Prepared: Aug-21-15 Analyzed: Aug-25-15**

Analyte	Source Result	Result	Qual	Reporting Limit	Unit	Spike Level	% REC	%REC Limits	RPD	RPD Limit
Batch: 15H0077										**Analyst:** ZT
Blank (15H0077-BLK1)										
Acenaphthene		**ND**		0.25	mg/kg					
Acenaphthylene		**ND**		0.25	mg/kg					
Anthracene		**ND**		0.25	mg/kg					
Benzidine		**ND**		1.00	mg/kg					
Benzoic Acid		**ND**		1.00	mg/kg					
Benzo (a) anthracene		**ND**		0.25	mg/kg					
Benzo (b) fluoranthene		**ND**		0.25	mg/kg					
Benzo (k) fluoranthene		**ND**		0.25	mg/kg					
Benzo (g,h,i) perylene		**ND**		0.25	mg/kg					
Benzo (a) pyrene		**ND**		0.25	mg/kg					
Benzyl Alcohol		**ND**		0.25	mg/kg					
Bis (2-chloroethoxy) methane		**ND**		0.25	mg/kg					
Bis (2-choroethyl) Ether		**ND**		0.25	mg/kg					
Bis (2-chloroisopropyl) Ether		**ND**		0.25	mg/kg					
Bis (2-ethylhexy) Phthalate		**ND**		0.50	mg/kg					
4-Bromophenyl Phenyl Ether		**ND**		0.25	mg/kg					
Butylbenzyl Phthalate		**ND**		0.25	mg/kg					
4-Chloroaniline		**ND**		0.25	mg/kg					
2-Chloronaphthalene		**ND**		0.25	mg/kg					
4-Chlorophenyl Phenyl Ether		**ND**		0.25	mg/kg					
Chrysene		**ND**		0.25	mg/kg					
Dibenzo (a,h) anthracene		**ND**		0.25	mg/kg					
Dibenzofuran		**ND**		0.25	mg/kg					
Di-n-butyl Phthalate		**ND**		0.25	mg/kg					
1,2-Dichlorobenzene		**ND**		0.25	mg/kg					
1,3-Dichlorobenzene		**ND**		0.25	mg/kg					
1,4-Dichlorobenzene		**ND**		0.25	mg/kg					
3,3'-Dichlorobenzidine		**ND**		0.50	mg/kg					
Diethyl Phthalate		**ND**		0.25	mg/kg					
Dimethyl Phthalate		**ND**		0.25	mg/kg					
2,4-Dinitrotoluene		**ND**		0.25	mg/kg					
2,6-Dinitrotoluene		**ND**		0.25	mg/kg					

The contents of this report apply to the sample(s) analyzed in accordance with the chain of custody document.
No duplication of this report is allowed, except in its entirety.

685 Stone Road #11 & 12 • Benicia, CA 94510 • (707) 747-6081 • (800) 747-6082 • Fax (707) 747-6082

WORK ORDER: 1508026 **COC Number:** 22984

Valero
3400 East Second St
Benicia, CA 94510

Project: Waste Management Department
PO Number: 4503183370
Project Manager: John Lazorik

Quality Control
(Continued)

Semi-Volatile Organic Compounds by EPA 8270 (Continued) **Prepared: Aug-21-15 Analyzed: Aug-25-15**

Analyte	Source Result	Result	Qual	Reporting Limit	Unit	Spike Level	% REC	%REC Limits	RPD	RPD Limit
Batch: 15H0077 (Continued)										**Analyst:** ZT
Blank (15H0077-BLK1)										
Di-n-octyl Phthalate		**ND**		0.25	mg/kg					
Fluoranthene		**ND**		0.25	mg/kg					
Fluorene		**ND**		0.25	mg/kg					
Hexachlorobenzene		**ND**		0.25	mg/kg					
Hexachlorobutadiene		**ND**		0.25	mg/kg					
Hexachlorocyclopentadiene		**ND**		0.25	mg/kg					
Hexachloroethane		**ND**		0.25	mg/kg					
Indeno (1,2,3-cd) pyrene		**ND**		0.25	mg/kg					
Isophorone		**ND**		0.25	mg/kg					
2-Methylnaphthalene		**ND**		0.25	mg/kg					
Naphthalene		**ND**		0.25	mg/kg					
2-Nitroaniline		**ND**		0.25	mg/kg					
3-Nitroaniline		**ND**		0.25	mg/kg					
4-Nitroaniline		**ND**		0.25	mg/kg					
Nitrobenzene		**ND**		0.25	mg/kg					
N-Nitrosodiphenylamine		**ND**		0.25	mg/kg					
N-Nitrosodi-n-propylamine		**ND**		0.25	mg/kg					
Phenanthrene		**ND**		0.25	mg/kg					
Pyrene		**ND**		0.25	mg/kg					
1,2,4-Trichlorobenzene		**ND**		0.25	mg/kg					
4-Chloro-3-methylphenol		**ND**		0.25	mg/kg					
2-Chlorophenol		**ND**		0.25	mg/kg					
2,4-Dichlorophenol		**ND**		0.25	mg/kg					
2,4-Dimethylphenol		**ND**		0.25	mg/kg					
4,6-Dinitro-2-methylphenol		**ND**		0.25	mg/kg					
2,4-Dinitrophenol		**ND**		0.50	mg/kg					
2-Methylphenol		**ND**		0.25	mg/kg					
4-Methylphenol		**ND**		0.25	mg/kg					
2-Nitrophenol		**ND**		0.25	mg/kg					
4-Nitrophenol		**ND**		0.25	mg/kg					
Pentachlorophenol		**ND**		0.25	mg/kg					
Phenol		**ND**		0.25	mg/kg					

The contents of this report apply to the sample(s) analyzed in accordance with the chain of custody document.
No duplication of this report is allowed, except in its entirety.

685 Stone Road #11 & 12 • Benicia, CA 94510 • (707) 747-6081 • (800) 747-6082 • Fax (707) 747-6082

WORK ORDER: 1508026 **COC Number:** 22984

Valero
3400 East Second St
Benicia, CA 94510

Project: Waste Management Department
PO Number: 4503183370
Project Manager: John Lazorik

Quality Control
(Continued)

Semi-Volatile Organic Compounds by EPA 8270 (Continued) **Prepared: Aug-21-15 Analyzed: Aug-25-15**

Analyte	Source Result	Result	Qual	Reporting Limit	Unit	Spike Level	% REC	%REC Limits	RPD	RPD Limit
Batch: 15H0077 (Continued)										**Analyst:** ZT
Blank (15H0077-BLK1)										
2,4,5-Trichlorophenol		**ND**		0.25	mg/kg					
2,4,6-Trichlorophenol		**ND**		0.25	mg/kg					
3-Methylphenol		**ND**		0.25	mg/kg					
Surrogate: 2-Fluorophenol		*7.65*			*mg/kg*	*10.0*	*76.5*	*60-125*		
Surrogate: Phenol-d6		*11.4*			*mg/kg*	*10.0*	*114*	*54-134*		
Surrogate: Nitrobenzene-d5		*4.50*			*mg/kg*	*5.00*	*90.1*	*59-141*		
Surrogate: 2-Fluorobiphenyl		*4.54*			*mg/kg*	*5.00*	*90.7*	*60-127*		
Surrogate: 2,4,6-Tribromophenol		*13.0*			*mg/kg*	*10.0*	*130*	*43-151*		
Surrogate: p-Terphenyl-d14		*5.70*			*mg/kg*	*5.00*	*114*	*39-166*		
LCS (15H0077-BS1)										
Acenaphthene		**2.76**		0.25	mg/kg	2.50	110	46-128		
1,4-Dichlorobenzene		**2.60**		0.25	mg/kg	2.50	104	50-128		
2,4-Dinitrotoluene		**2.10**		0.25	mg/kg	2.50	83.8	49-119		
N-Nitrosodi-n-propylamine		**2.60**		0.25	mg/kg	2.50	104	53-138		
Pyrene		**2.50**		0.25	mg/kg	2.50	100	19-170		
1,2,4-Trichlorobenzene		**2.01**		0.25	mg/kg	2.50	80.4	58-123		
4-Chloro-3-methylphenol		**1.88**		0.25	mg/kg	2.50	75.0	48-140		
2-Chlorophenol		**2.23**		0.25	mg/kg	2.50	89.2	59-115		
4-Nitrophenol		**1.82**		0.25	mg/kg	2.50	72.8	20-139		
Pentachlorophenol		**1.96**		0.25	mg/kg	2.50	78.4	21-147		
Phenol		**2.39**		0.25	mg/kg	2.50	95.6	16-125		
Surrogate: 2-Fluorophenol		*9.20*			*mg/kg*	*10.0*	*92.0*	*59-125*		
Surrogate: Phenol-d6		*9.55*			*mg/kg*	*10.0*	*95.5*	*54-134*		
Surrogate: Nitrobenzene-d5		*4.29*			*mg/kg*	*5.00*	*85.8*	*59-141*		
Surrogate: 2-Fluorobiphenyl		*4.84*			*mg/kg*	*5.00*	*96.7*	*60-127*		
Surrogate: 2,4,6-Tribromophenol		*10.7*			*mg/kg*	*10.0*	*107*	*43-151*		
Surrogate: p-Terphenyl-d14		*3.98*			*mg/kg*	*5.00*	*79.7*	*39-166*		

The contents of this report apply to the sample(s) analyzed in accordance with the chain of custody document.
No duplication of this report is allowed, except in its entirety.

685 Stone Road #11 & 12 • Benicia, CA 94510 • (707) 747-6081 • (800) 747-6082 • Fax (707) 747-6082

WORK ORDER: 1508026 **COC Number:** 22984

Valero
3400 East Second St
Benicia, CA 94510

Project: Waste Management Department
PO Number: 4503183370
Project Manager: John Lazorik

Quality Control
(Continued)

Semi-Volatile Organic Compounds by EPA 8270 (Continued) **Prepared: Aug-21-15 Analyzed: Aug-25-15**

Analyte	Source Result	Result	Qual	Reporting Limit	Unit	Spike Level	% REC	%REC Limits	RPD	RPD Limit
Batch: 15H0077 (Continued)									**Analyst:** ZT	
LCS Dup (15H0077-BSD1)										
Acenaphthene		**2.76**		0.25	mg/kg	2.50	110	46-128	0.00	20
1,4-Dichlorobenzene		**2.60**		0.25	mg/kg	2.50	104	50-128	0.192	20
2,4-Dinitrotoluene		**1.92**		0.25	mg/kg	2.50	76.6	49-119	8.98	20
N-Nitrosodi-n-propylamine		**2.54**		0.25	mg/kg	2.50	101	53-138	2.72	20
Pyrene		**2.44**		0.25	mg/kg	2.50	97.8	19-170	2.22	20
1,2,4-Trichlorobenzene		**2.04**		0.25	mg/kg	2.50	81.4	58-123	1.24	20
4-Chloro-3-methylphenol		**1.86**		0.25	mg/kg	2.50	74.4	48-140	0.803	20
2-Chlorophenol		**2.35**		0.25	mg/kg	2.50	94.0	59-115	5.24	20
4-Nitrophenol		**1.92**		0.25	mg/kg	2.50	76.6	20-139	5.09	20
Pentachlorophenol		**1.90**		0.25	mg/kg	2.50	76.2	21-147	2.85	20
Phenol		**2.36**		0.25	mg/kg	2.50	94.2	16-125	1.48	20
Surrogate: 2-Fluorophenol		*9.30*			*mg/kg*	*10.0*	*93.0*	*59-125*		
Surrogate: Phenol-d6		*9.45*			*mg/kg*	*10.0*	*94.5*	*54-134*		
Surrogate: Nitrobenzene-d5		*4.37*			*mg/kg*	*5.00*	*87.4*	*59-141*		
Surrogate: 2-Fluorobiphenyl		*4.87*			*mg/kg*	*5.00*	*97.4*	*60-127*		
Surrogate: 2,4,6-Tribromophenol		*10.6*			*mg/kg*	*10.0*	*106*	*43-151*		
Surrogate: p-Terphenyl-d14		*3.86*			*mg/kg*	*5.00*	*77.2*	*39-166*		

The contents of this report apply to the sample(s) analyzed in accordance with the chain of custody document.
No duplication of this report is allowed, except in its entirety.

685 Stone Road #11 & 12 • Benicia, CA 94510 • (707) 747-6081 • (800) 747-6082 • Fax (707) 747-6082

WORK ORDER: 1508026 **COC Number:** 22984

Valero
3400 East Second St
Benicia, CA 94510

Project: Waste Management Department
PO Number: 4503183370
Project Manager: John Lazorik

Quality Control
(Continued)

Total Metals by EPA 6010B (ICP-AES) **Prepared & Analyzed: Aug-20-15**

Analyte	Source Result	Result	Qual	Reporting Limit	Unit	Spike Level	% REC	%REC Limits	RPD	RPD Limit
Batch: 15H0075										**Analyst:** ZT
Blank (15H0075-BLK1)										
Cadmium		**ND**		0.250	mg/kg					
Lead		**ND**		0.250	mg/kg					
Selenium		**ND**		1.00	mg/kg					
Cobalt		**ND**		0.250	mg/kg					
Silver		**ND**		0.250	mg/kg					
Chromium		**ND**		0.250	mg/kg					
Antimony		**ND**		0.250	mg/kg					
Molybdenum		**ND**		0.250	mg/kg					
Arsenic		**ND**		2.00	mg/kg					
Nickel		**ND**		0.250	mg/kg					
Beryllium		**ND**		0.250	mg/kg					
Thallium		**ND**		1.00	mg/kg					
Copper		**ND**		0.250	mg/kg					
Vanadium		**ND**		0.250	mg/kg					
Barium		**ND**		0.250	mg/kg					
Zinc		**ND**		0.250	mg/kg					
LCS (15H0075-BS1)										
Molybdenum		**21.3**		0.250	mg/kg	25.0	85.2	80-120		
Lead		**23.8**		0.250	mg/kg	25.0	95.2	80-120		
Copper		**23.4**		0.250	mg/kg	25.0	93.8	80-120		
Cobalt		**22.8**		0.250	mg/kg	25.0	91.4	80-120		
Chromium		**23.1**		0.250	mg/kg	25.0	92.4	80-120		
Cadmium		**23.6**		0.250	mg/kg	25.0	94.2	80-120		
Antimony		**23.4**		0.250	mg/kg	25.0	93.6	80-120		
Barium		**24.2**		0.250	mg/kg	25.0	97.0	80-120		
Beryllium		**22.6**		0.250	mg/kg	25.0	90.2	80-120		
Nickel		**24.8**		0.250	mg/kg	25.0	99.0	80-120		
Arsenic		**21.8**		2.00	mg/kg	25.0	87.2	80-120		
Vanadium		**23.0**		0.250	mg/kg	25.0	91.8	80-120		
Silver		**22.9**		0.250	mg/kg	25.0	91.6	80-120		

The contents of this report apply to the sample(s) analyzed in accordance with the chain of custody document.
No duplication of this report is allowed, except in its entirety.

685 Stone Road #11 & 12 • Benicia, CA 94510 • (707) 747-6081 • (800) 747-6082 • Fax (707) 747-6082

WORK ORDER: 1508026 **COC Number:** 22984

Valero
3400 East Second St
Benicia, CA 94510

Project: Waste Management Department
PO Number: 4503183370
Project Manager: John Lazorik

Quality Control
(Continued)

Total Metals by EPA 6010B (ICP-AES) (Continued)

Prepared & Analyzed: Aug-20-15

Analyte	Source Result	Result	Qual	Reporting Limit	Unit	Spike Level	% REC	%REC Limits	RPD	RPD Limit
Batch: 15H0075 (Continued)										**Analyst:** ZT
LCS (15H0075-BS1)										
Thallium		**21.9**		1.00	mg/kg	25.0	87.6	80-120		
Zinc		**22.6**		0.250	mg/kg	25.0	90.4	80-120		
Selenium		**23.4**		1.00	mg/kg	25.0	93.4	80-120		
LCS Dup (15H0075-BSD1)										
Antimony		**24.4**		0.250	mg/kg	25.0	97.4	80-120	3.98	20
Arsenic		**23.5**		2.00	mg/kg	25.0	94.0	80-120	7.51	20
Barium		**24.8**		0.250	mg/kg	25.0	99.2	80-120	2.24	20
Beryllium		**23.6**		0.250	mg/kg	25.0	94.6	80-120	4.76	20
Vanadium		**24.0**		0.250	mg/kg	25.0	95.8	80-120	4.26	20
Thallium		**23.8**		1.00	mg/kg	25.0	95.0	80-120	8.11	20
Nickel		**26.0**		0.250	mg/kg	25.0	104	80-120	4.73	20
Selenium		**24.4**		1.00	mg/kg	25.0	97.4	80-120	4.19	20
Chromium		**24.4**		0.250	mg/kg	25.0	97.4	80-120	5.27	20
Lead		**25.0**		0.250	mg/kg	25.0	99.8	80-120	4.72	20
Cobalt		**24.2**		0.250	mg/kg	25.0	96.6	80-120	5.53	20
Silver		**23.6**		0.250	mg/kg	25.0	94.2	80-120	2.80	20
Molybdenum		**22.6**		0.250	mg/kg	25.0	90.4	80-120	5.92	20
Copper		**24.1**		0.250	mg/kg	25.0	96.4	80-120	2.73	20
Cadmium		**24.8**		0.250	mg/kg	25.0	99.4	80-120	5.37	20
Zinc		**23.4**		0.250	mg/kg	25.0	93.8	80-120	3.69	20
Batch: 15H0078										**Analyst:** ZT
Blank (15H0078-BLK1)										
Mercury		**ND**		0.0200	mg/kg					

The contents of this report apply to the sample(s) analyzed in accordance with the chain of custody document.
No duplication of this report is allowed, except in its entirety.

685 Stone Road #11 & 12 • Benicia, CA 94510 • (707) 747-6081 • (800) 747-6082 • Fax (707) 747-6082

WORK ORDER: 1508026 **COC Number:** 22984

Valero
3400 East Second St
Benicia, CA 94510

Project: Waste Management Department
PO Number: 4503183370
Project Manager: John Lazorik

Quality Control
(Continued)

Total Metals by EPA 6010B (ICP-AES) (Continued) **Prepared & Analyzed: Aug-25-15**

Analyte	Source Result	Result	Qual	Reporting Limit	Unit	Spike Level	% REC	%REC Limits	RPD	RPD Limit
Batch: 15H0078 (Continued)										**Analyst:** ZT
LCS (15H0078-BS1)										
Mercury		**0.430**		0.0200	mg/kg	0.417	103	80-120		
LCS Dup (15H0078-BSD1)										
Mercury		**0.438**		0.0200	mg/kg	0.417	105	80-120	1.73	20

The contents of this report apply to the sample(s) analyzed in accordance with the chain of custody document.
No duplication of this report is allowed, except in its entirety.

685 Stone Road #11 & 12 • Benicia, CA 94510 • (707) 747-6081 • (800) 747-6082 • Fax (707) 747-6082

WORK ORDER: 1508026 **COC Number:** 22984

Valero
3400 East Second St
Benicia, CA 94510

Project: Waste Management Department
PO Number: 4503183370
Project Manager: John Lazorik

Quality Control
(Continued)

TCLP Metals **Prepared: Aug-27-15 Analyzed: Aug-28-15**

Analyte	Source Result	Result	Qual	Reporting Limit	Unit	Spike Level	% REC	%REC Limits	RPD	RPD Limit
Batch: 15H0096										**Analyst:** ZT
Blank (15H0096-BLK1)										
Nickel		**ND**		0.0500	mg/L					
Chromium		**ND**		0.0500	mg/L					
LCS (15H0096-BS1)										
Nickel		**5.63**		0.0500	mg/L	5.00	113	80-120		
Chromium		**5.42**		0.0500	mg/L	5.00	108	80-120		
LCS Dup (15H0096-BSD1)										
Nickel		**5.55**		0.0500	mg/L	5.00	111	80-120	1.43	20
Chromium		**5.32**		0.0500	mg/L	5.00	106	80-120	1.86	20

The contents of this report apply to the sample(s) analyzed in accordance with the chain of custody document.
No duplication of this report is allowed, except in its entirety.

685 Stone Road #11 & 12 • Benicia, CA 94510 • (707) 747-6081 • (800) 747-6082 • Fax (707) 747-6082

WORK ORDER: 1508026 **COC Number:** 22984

Valero
3400 East Second St
Benicia, CA 94510

Project: Waste Management Department
PO Number: 4503183370
Project Manager: John Lazorik

Quality Control
(Continued)

Wet Chemistry **Prepared & Analyzed: Aug-21-15**

Analyte	Source Result	Result	Qual	Reporting Limit	Unit	Spike Level	% REC	%REC Limits	RPD	RPD Limit
Batch: 15H0056										**Analyst:** AM
Blank (15H0056-BLK1)										
Reactive Sulfide		**ND**		0.0500	mg/kg					
LCS (15H0056-BS1)										
Reactive Sulfide		**1.76**		0.0500	mg/kg	10.0	17.6	10-120		
LCS Dup (15H0056-BSD1)										
Reactive Sulfide		**1.85**		0.0500	mg/kg	10.0	18.5	10-120	4.70	20
Batch: 15H0091										**Analyst:** AM
Blank (15H0091-BLK1)										
Cyanide, Total		**ND**		0.00250	mg/kg					
LCS (15H0091-BS1)										
Cyanide, Total		**0.203**		0.00250	mg/kg	0.250	81.2	80-120		
LCS Dup (15H0091-BSD1)										
Cyanide, Total		**0.222**		0.00250	mg/kg	0.250	89.0	80-120	9.17	20

The contents of this report apply to the sample(s) analyzed in accordance with the chain of custody document.
No duplication of this report is allowed, except in its entirety.

685 Stone Road #11 & 12 • Benicia, CA 94510 • (707) 747-6081 • (800) 747-6082 • Fax (707) 747-6082

WORK ORDER: 1508026 **COC Number:** 22984

Valero
3400 East Second St
Benicia, CA 94510

Project: Waste Management Department
PO Number: 4503183370
Project Manager: John Lazorik

Notes and Definitions

Item	Definition
J	The result is less than the reporting limit, but greater than the MDL.
Dry	Sample results reported on a dry weight basis.
ND	Analyte NOT DETECTED at or above the reporting limit.
%REC	Percent Recovery
DF	Dilution Factor
LCS	Lab Control Sample
LCSD	Lab Control Sample Duplicate
MDL	Minimum Detection Limit
MRL	Minimum Reporting Limit
MS	Matrix Spike
MSD	Matrix Spike Duplicate
RPD	Relative Percent Difference
Source	Sample that was matrix spiked or duplicated

The contents of this report apply to the sample(s) analyzed in accordance with the chain of custody document.
No duplication of this report is allowed, except in its entirety.

685 Stone Road #11 & 12 • Benicia, CA 94510 • (707) 747-6081 • (800) 747-6082 • Fax (707) 747-6082

Delta Environmental Laboratories

Chain of Custody (COC) Form

685 Stone Road #11 & 12
Benicia, Ca, 94510
(707(747-6081, 800-747-6082 FAX (707) 747-6082

Results to: John Lazorik, Deborah Hill
Client Name: Waste Management Department
Valero Refining Company
Address: 3400 East Second Street, Benicia, CA 94510
e-mail: john.lazorik@valero.com deborah.hill@valero.com
Telephone: 707-745-7660 Fax: 745-7600
SAMPLER (signature): J. Lazorik
Turnaround: Standard

Project Name:

LAB ID 1508024
Ref # 22934

CAUTION: POTENTIAL H2S: HANDLE UNDER A HOOD

Analysis Requested

#	Sample ID or Location	Date	Time	Matrix	Cont. Type	Preservative	No. of containers	pH	Temperature	RCI	CAM 17, TTLC	TPH-g	VOC, 8260B	SVOC, 8270C	TPH-D, 8015M	TPH-Mo	STLC:	TCLP: Ni Cr	BTEX 8020	Total Cyanides	Reactive Sulfides	Comments:
																						Run STLC/TCLP if necessary
	72" LINE MID LOWER		8/18	S			1		Ice		X		X	X				X		X	X	
	72" LINE SOUTH SIDE MID		8/18	S			1		Ice		X		X	X				X		X	X	
	72" LINE SOUTH LOWER		8/18	S			1		Ice		X		X	X				X		X	X	

Relinquished by:	Date 8/19/15	1)	Have all samples received been stored on ice? ____
Received By:	Date 8/19/15	2)	Did any VOA samples received have any head space? ____
Relinquished by:	Date	3)	Were samples in appropriate containers and packaged properly? ____
Received By:	Date	4)	Were samples received in good condition? ____

**CONTAINER TYPES: AL = Amber Liter; AHL = 500 ml Amber; PT = Pint (Plastic); QT = Quart (Plastic); HG = Half Gallon (Plastic); SJ = Soil Jar; B4 = 4oz. BACT; BT = Brass Tube; VOA = 40mL VOA; OTC - Other Type Container

*MATRIX: AQ = Aqueous Nondrinking Water, Digested Metals; FE = Low R.L.s, Aqueous Nondrinking Water, Digested Metals; DW = Drinking Water; SL = Soil Sludge, Solid ; FP = Free Product

* PRESERVATIVE: 1=HNO3; 2=HCl; 3=H2SO4; 4=Na2S2O3; 5=NAOH; 6=NH4Cl; 7=ZnAce

f:\pw\vicki\lab\COCs\COC-Waste Management.xlsx\COC Template

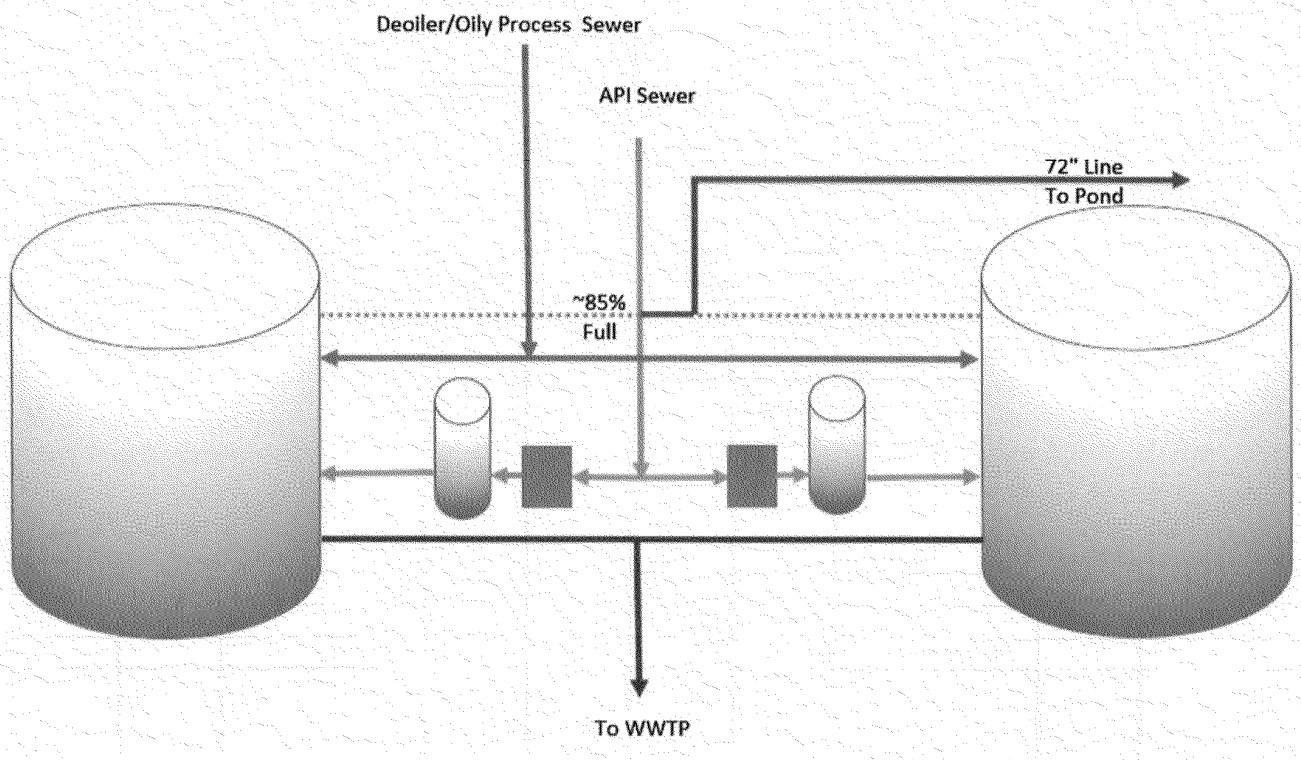

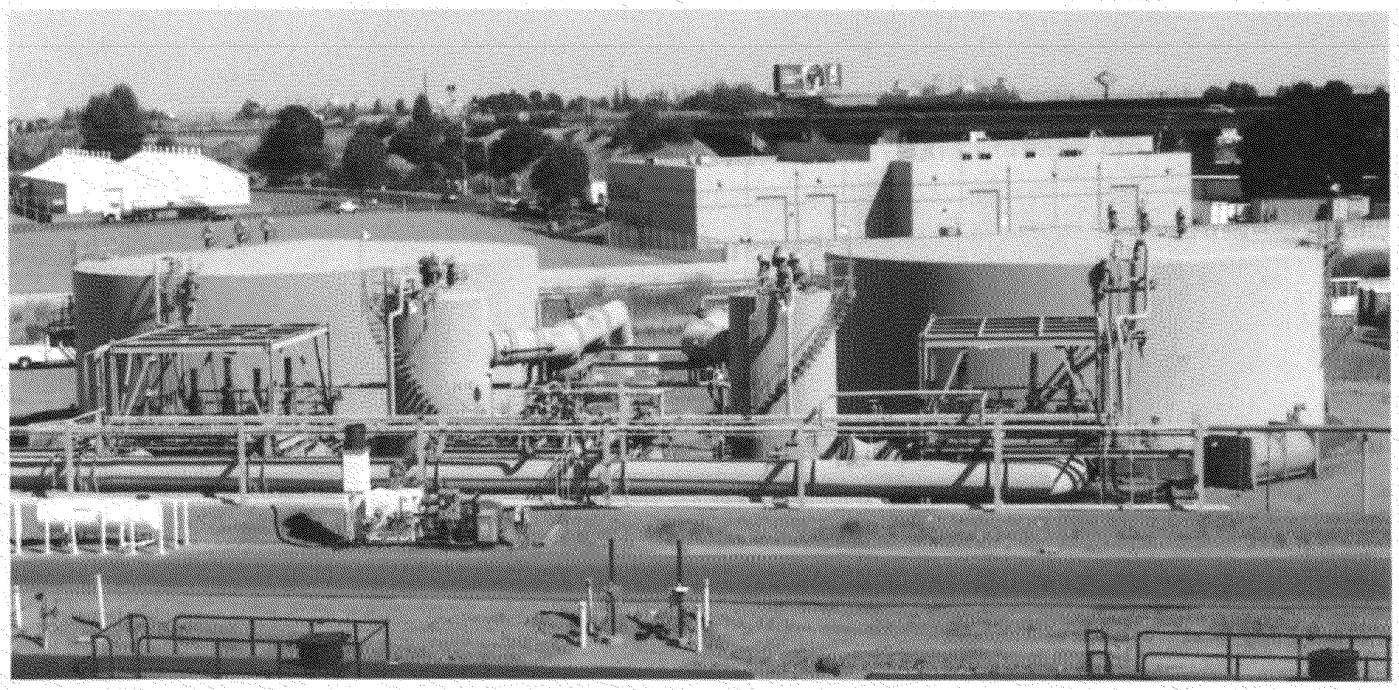

ATTACHMENT 4

TABLE C-5. HISTORIC POND SEDIMENT ANALYTICAL RESULTS FOR BTEX, TPH, AND MTBE THROUGH FOURTH QUARTER 2014

Valero Benicia Refinery - Benicia, California

Well ID	Analyte/ Units:	Benzene (mg/kg)	Toluene (mg/kg)	Ethylbenzene (mg/kg)	Xylenes (total) (mg/kg)	TPH-g (C8-C12) (mg/kg)	TPH-g (C6-C12) (mg/kg)	TPH-d (C12-C24) (mg/kg)	TPH-mo (C24-C36) (mg/kg)	MTBE (mg/kg)
	Date	Value/Qual	Value/Qual	Value/Qual	Value/Qual	Value/Qual	Value/Qual	Value/Qual	Value/Qual	Value/Qual
20-Year Pond	2/13/1997							850	1500	
20-Year Pond	5/7/1998							1600		
20-Year Pond	10/25/1999	<0.005	<0.005	<0.005	<0.005	24.7	<1.0	290	378	<0.05
20-Year Pond	1/12/2001	<0.005 U	<0.005 U	<0.005 U	<0.005 U		<1.0 U	7650	14900	<0.05 U
20-Year Pond	10/19/2001	<0.005 U	<0.005 U	<0.005 U	<0.005 U		<1.0 U	12	28	<0.05 U
20-Year Pond	10/23/2002	<0.013 U	<0.013 U	<0.013 U	<0.013 U		<2.6 U	5000	8000	<0.013 U
20-Year Pond	4/29/2003	<0.005	<0.005	<0.005	<0.005		<1.0	14	37	<0.005
20-Year Pond	4/23/2004	<0.012	<0.012	<0.012	<0.012		<2.3	17000	23000	<0.012
20-Year Pond	4/26/2005	<2.1	2.9	<2.1	5.5			2700 Q2	10000 Q3	<2.1
20-Year Pond	8/16/2005	<2.6	<2.6	<2.6	<2.6			940	1100	<2.6
20-Year Pond	12/20/2005	<0.5	<0.5	<0.5	<0.5		130 J3	57	55	<0.5
20-Year Pond	12/20/2005	<0.017	0.021	<0.017	0.018		16	12	<50	<0.017
20-Year Pond	4/11/2006	<3.7	<3.7	<3.7			360			
20-Year Pond	4/10/2007	<0.12	<0.12	<0.12	<0.24		76	130	<270	<0.12
20-Year Pond	4/8/2008	<4.90	<4.90	<4.90	<9.90		440	280	610	<4.90
20-Year Pond	4/8/2009	<0.024	<0.024	<0.024	<0.048		3.3	77	<250	<0.024
20-Year Pond	4/7/2010	<0.05	<0.05	<0.05	<0.099		11 Y	6800	9100	<0.02
20-Year Pond	4/8/2011	<0.024	<0.024	<0.024	<0.049		<6.0	4700	6500	
20-Year Pond	4/3/2012	<0.029	<0.029	<0.029	<0.058		12 Y	2900	4300	
20-Year Pond	4/4/2013	<0.031	<0.031	<0.031	<0.062		<6.6	4800	10000	
20-Year Pond	4/9/2014	<0.023	<0.023	<0.023	<0.045 UJ		<4.6	1500	3300	
20-Year Pond	Historic Max	0.00	2.90	0.00	5.50	24.70	440.00	17,000.00	23,000.00	0.00
20-Year Pond	Historic Min	0.00	0.02	0.00	0.02	24.70	3.30	12.00	28.00	0.00
Equalization Pond	2/13/1997							2700	3000	
Equalization Pond	5/7/1998							4300		
Equalization Pond	10/26/1999	<0.005	<0.005	<0.005	<0.005	<10	<1.0	255	503	<0.05
Equalization Pond	1/12/2001	<0.005 U	<0.005 U	<0.005 U	<0.005 U	<10	<1.0 U	2090	4030	<0.05 U
Equalization Pond	10/19/2001	<0.005 U	<0.005 U	<0.005 U	<0.005 U		<1.0 U	4400	14000	<0.05 U
Equalization Pond	10/23/2002	<0.0055 U	<0.0055 U	<0.0055 U	<0.0055 U		<1.1 U	3200	10000	<0.0055 U
Equalization Pond	4/29/2003	<0.005	<0.005	<0.005	<0.005		<1.0	59	160	<0.005
Equalization Pond	4/23/2004	<0.0079	<0.0079	<0.0079	<0.0079		<1.6	8700	12000	<0.0079
Equalization Pond	4/26/2005	<1.5	<1.5	<1.5	1.5			21000 Q2	79000 Q3	<1.5
Equalization Pond	8/16/2005	<0.0096	<0.0096	<0.0096	<0.0096		<1.9	180	730 Q3	<0.0096

Stantec Consulting Services

4Q14 Table C-5.xlsx
Project Number: 185702740.500

NOTE: The terms Equalization, Retention, and 20-yr are legacy nomenclature. The levees between these ponds were breeched some years ago and the pond is now managed as one pond, the Retention Pond.

ATTACHMENT 5

ED_001593_00015893

TABLE C-5. HISTORIC POND SEDIMENT ANALYTICAL RESULTS FOR BTEX, TPH, AND MTBE
THROUGH FOURTH QUARTER 2014
Valero Benicia Refinery - Benicia, California

Well ID	Analyte/ Units:	Benzene (mg/kg)	Toluene (mg/kg)	Ethylbenzene (mg/kg)	Xylenes (total) (mg/kg)	TPH-g (C8-C12) (mg/kg)	TPH-g (C6-C12) (mg/kg)	TPH-d (C12-C24) (mg/kg)	TPH-mo (C24-C36) (mg/kg)	MTBE (mg/kg)
	Date	Value/Qual	Value/Qual	Value/Qual	Value/Qual	Value/Qual	Value/Qual	Value/Qual	Value/Qual	Value/Qual
Equalization Pond	12/20/2005	<0.017	<0.017	<0.017	0.02		4.3	5100	11000	<0.017
Equalization Pond	12/20/2005	<0.005	<0.005	<0.005	<0.005		1.6	4300	9600	<0.005
Equalization Pond	4/11/2006	<3.6	<3.6	<3.6			<180			
Equalization Pond	4/10/2007	<0.01	<0.01	<0.01	<0.021		<0.52	2200	6700	<0.01
Equalization Pond	4/8/2008	<0.010	<0.010	<0.010	<0.020		<0.51	18000	47000	<0.010
Equalization Pond	4/8/2009	<0.016	<0.016	<0.016	<0.032		<0.79	4700	9800	<0.016
Equalization Pond	4/7/2010	<0.018	<0.018	<0.018	<0.037		<3.7	23000 Y	38000	<0.073
Equalization Pond	4/8/2011	<0.13	<0.13	<0.13	<0.26		<5.3	27000	41000	
Equalization Pond	4/3/2012	<0.019	<0.019	<0.019	<0.038		<4.2	18000 Y	26000	
Equalization Pond	4/4/2013	<0.017	<0.017	<0.017	<0.034		<3.4	5500	14000	
Equalization Pond	4/9/2014	<0.019	<0.019	<0.019	<0.038 UJ		<4.5	12000 Y	19000	
Equalization Pond	**Historic Max**	**0.00**	**0.00**	**0.00**	**1.50**	**0.00**	**4.30**	**27,000.00**	**79,000.00**	**0.00**
Equalization Pond	**Historic Min**	**0.00**	**0.00**	**0.00**	**0.02**	**0.00**	**1.60**	**59.00**	**160.00**	**0.00**
Final Pond	2/13/1997							140	380	
Final Pond	10/25/1999	<0.005	<0.005	<0.005	<0.005	79.3	<1.0	478	511	<0.05
Final Pond	1/12/2001	<0.005 U	<0.005 U	<0.005 U	<0.005 U		<1.0 U	639	1210	0.102
Final Pond	10/19/2001	<0.005 U	<0.005 U	<0.005 U	<0.005 U		<1.0 U	140	280	<0.05 U
Final Pond	10/23/2002	<0.083 U	<0.083 U	<0.083 U	<0.083 U		<17 U	24000	29000	0.29
Final Pond	4/29/2003	<0.005	<0.005	<0.005	<0.005		<1.0	8.8	28	<0.005
Final Pond	4/23/2004	<0.062	0.71	<0.062	0.12		13	13000	17000	<0.062 HT-04
Final Pond	4/26/2005	<5.2	6.5	<5.2	<5.2			13000 Q2	49000 Q3	<5.2
Final Pond	8/16/2005	<3.3	<3.3	<3.3	<3.3			1300	2200 Q3	<3.3
Final Pond	12/20/2005	<0.5	<0.5	<0.5	<0.5		180 J3	110	130	<0.5
Final Pond	12/20/2005	<0.5	<0.5	<0.5	<0.5		290 J3	270 Q2	340 Q3	<0.5
Final Pond	4/11/2006	<4.4	<4.4	<4.4			640			
Final Pond	4/10/2007	<7.6	<7.6	<7.6	<15		530	1600	2400	<7.6
Final Pond	4/8/2008	<2.80	<2.80	<2.80	<5.70		1,100	2000	2400	<2.80
Final Pond	4/8/2009	<0.023	<0.023	<0.023	<0.046		3.4	1500	2500	<0.023
Final Pond	4/7/2010	<0.04	<0.04	<0.04	<0.08		<8.2	17000	25000	<0.16
Final Pond	4/8/2011	<0.069	<0.069	<0.069	<0.14		120 Y	8200	6300	
Final Pond	4/3/2012	<0.017	<0.017	<0.017	<0.034		61 Y	41000	35000	
Final Pond	4/4/2013	<0.023	<0.023	<0.023	<0.046		<4.7	5100	9100	
Final Pond	4/9/2014	<0.016	<0.016	<0.016	<0.032 UJ		<3.5	3600	6300	
Final Pond	**Historic Max**	**0.00**	**6.50**	**0.00**	**0.12**	**79.30**	**1,100.00**	**41,000.00**	**49,000.00**	**0.29**

Stantec Consulting Services

ED_001593_00015893

TABLE C-5. HISTORIC POND SEDIMENT ANALYTICAL RESULTS FOR BTEX, TPH, AND MTBE THROUGH FOURTH QUARTER 2014

Valero Benicia Refinery - Benicia, California

Well ID	Analyte/ Units:	Benzene (mg/kg)	Toluene (mg/kg)	Ethylbenzene (mg/kg)	Xylenes (total) (mg/kg)	TPH-g (C8-C12) (mg/kg)	TPH-g (C6-C12) (mg/kg)	TPH-d (C12-C24) (mg/kg)	TPH-mo (C24-C36) (mg/kg)	MTBE (mg/kg)
	Date	Value/Qual	Value/Qual	Value/Qual	Value/Qual	Value/Qual	Value/Qual	Value/Qual	Value/Qual	Value/Qual
Final Pond	Historic Min	0.00	0.71	0.00	0.12	79.30	3.40	8.80	28.00	0.10
Retention Pond	2/13/1997	<0.005 *	<0.005 *	<0.005 *	<0.01 *			2200	6400	<0.005
Retention Pond	5/7/1998	<0.005 *	<0.005 *		<0.005 *			14000		
Retention Pond	10/25/1999	<0.005	<0.005	<0.005	<0.005	<10	<1.0	8.38	20.8	<0.05
Retention Pond	1/12/2001	<0.005 U	0.00598	<0.005 U	0.0118		<1.0 U	1220	2930	<0.05 U
Retention Pond	10/19/2001	<0.005 U	<0.005 U	<0.005 U	<0.005 U		<1.0 U	31000	58000	<0.05 U
Retention Pond	10/23/2002	0.026	0.084	0.037	0.17		<3.8 U	17000	30000	<0.019 U
Retention Pond	4/29/2003	<0.005	<0.005	<0.005	<0.005		<1.0	1200	2600	<0.005
Retention Pond	4/23/2004	0.17	1.5 E	0.045	0.2		4.6	5000	13000	<0.012
Retention Pond	4/26/2005	2.6	13	6.2	33			18000 Q2	65000 Q3	<1.6
Retention Pond	8/16/2005	<0.5	<3.2	8.2	38			14000	39000 Q3	<0.5
Retention Pond	12/20/2005	<0.5	0.54	0.73	2.7		230 J3	1400	3500	<0.5
Retention Pond	12/20/2005	<0.019	<0.019	<0.019	0.027		13	740	2500	<0.019
Retention Pond	4/11/2006	<13	<13	<13			760			
Retention Pond	4/10/2007	<2.1	<2.1	<2.1	<4.3		120	8900	25000	<2.1
Retention Pond	4/8/2008	<2.80	<2.80	<2.80	<5.60		630	2700	11000	<2.80
Retention Pond	4/8/2009	0.035	<0.011	<0.011	<0.023		12	1700	5700	<0.011
Retention Pond	4/7/2010	<0.23	<0.23	<0.23	<0.45		240	20000	25000	<0.91
Retention Pond	4/8/2011	0.068	0.012	<0.0076	0.042		2.5	3400	8600	
Retention Pond	4/3/2012	<0.011	<0.011	<0.011	<0.023		11 Y	17000 Y	32000	
Retention Pond	4/4/2013	<0.053	<0.053	<0.053	<0.11		28 Y	3200	9800	
Retention Pond	4/9/2014	<0.630	<0.630	<0.630	<1.30 UJ		160 Y	6100	12000	
Retention Pond	Historic Max	2.60	13.00	8.20	38.00	0.00	760.00	31,000.00	65,000.00	0.00
Retention Pond	Historic Min	0.03	0.01	0.04	0.01	0.00	2.50	8.38	20.80	0.00

ED_001593_00015893

TABLE C-5. HISTORIC POND SEDIMENT ANALYTICAL RESULTS FOR BTEX, TPH, AND MTBE
THROUGH FOURTH QUARTER 2014
Valero Benicia Refinery - Benicia, California

Well ID	Analyte/ Units:	Benzene (mg/kg)	Toluene (mg/kg)	Ethylbenzene (mg/kg)	Xylenes (total) (mg/kg)	TPH-g (C8-C12) (mg/kg)	TPH-g (C6-C12) (mg/kg)	TPH-d (C12-C24) (mg/kg)	TPH-mo (C24-C36) (mg/kg)	MTBE (mg/kg)
	Date	Value/Qual	Value/Qual	Value/Qual	Value/Qual	Value/Qual	Value/Qual	Value/Qual	Value/Qual	Value/Qual

Notes:
< = Not detected at the specific reporting level reported.
Blank cells = Not Tested
Qual = Laboratory or Data qualifier.
E = Laboratory qualifier: The concentration indicated for this analyte is an estimated value above the calibration range of the instrument.
HT-04 = Laboratory qualifier: The sample was analyzed beyond thre EPA recommended holding time. The results may still be useful for their intended purpose.
J3 = Laboratory qualifier: Estimated value; the concentration exceeded the calibration of analysis.
Q2 = Laboratory qualifier: Quantity of unknown hydrocarbon(s) in sample based on diesel.
Q3 = Laboratory qualifier: Quantity of unknown hydrocarbon(s) in sample based on motor oil.
U = Laboratory qualifier: The analyte was analyzed for, but not detected above the reported sample quantitation limit.
Y = Laboratory qualifer: Sample exhibits chromatographic pattern which does not resemble standard.
(mg/kg) = Milligrams per kilogram
(C_{12}-C_{24}) = Hydrocarbon range
Values which are greater than the laboratory reporting limit are shown in **bold**.

Prior to 4/1/2005:
Analysis by EPA methods 8015B/8021B. MTBE confirmation by EPA method 8260.
* = Analysis by EPA method 8240/8260.

Beginning 4/1/2005:
Analysis of Diesel Range Organics and Motor Oil by EPA Method 8015M; all other Analyses by EPA Method 8260B.

4th Quarter 2005:
'-S' suffix to Well ID indicates sample taken using a scoop
'-F' suffix to Well ID indicates sample taken using a filter bag

ED_001593_00015893

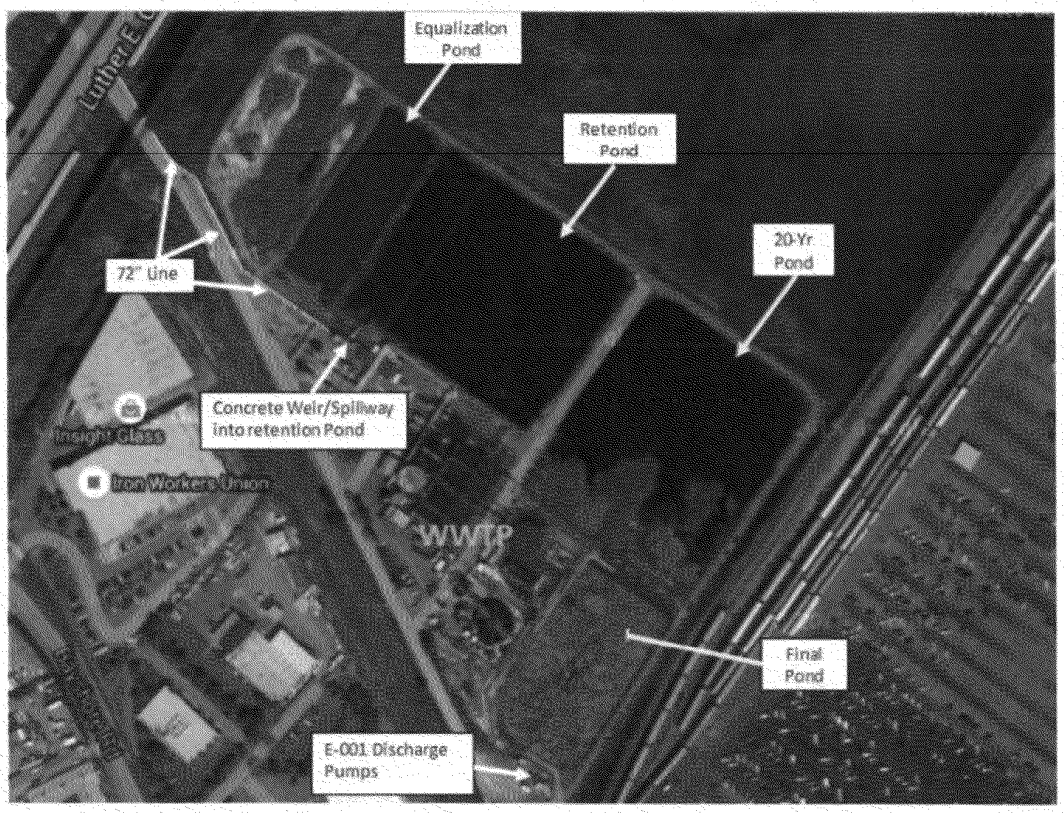
Equalization Pond
Retention Pond
20-Yr Pond
72" Line
Concrete Weir/Spillway into retention Pond
Insight Glass
Iron Workers Union
WWTP
Final Pond
E-001 Discharge Pumps

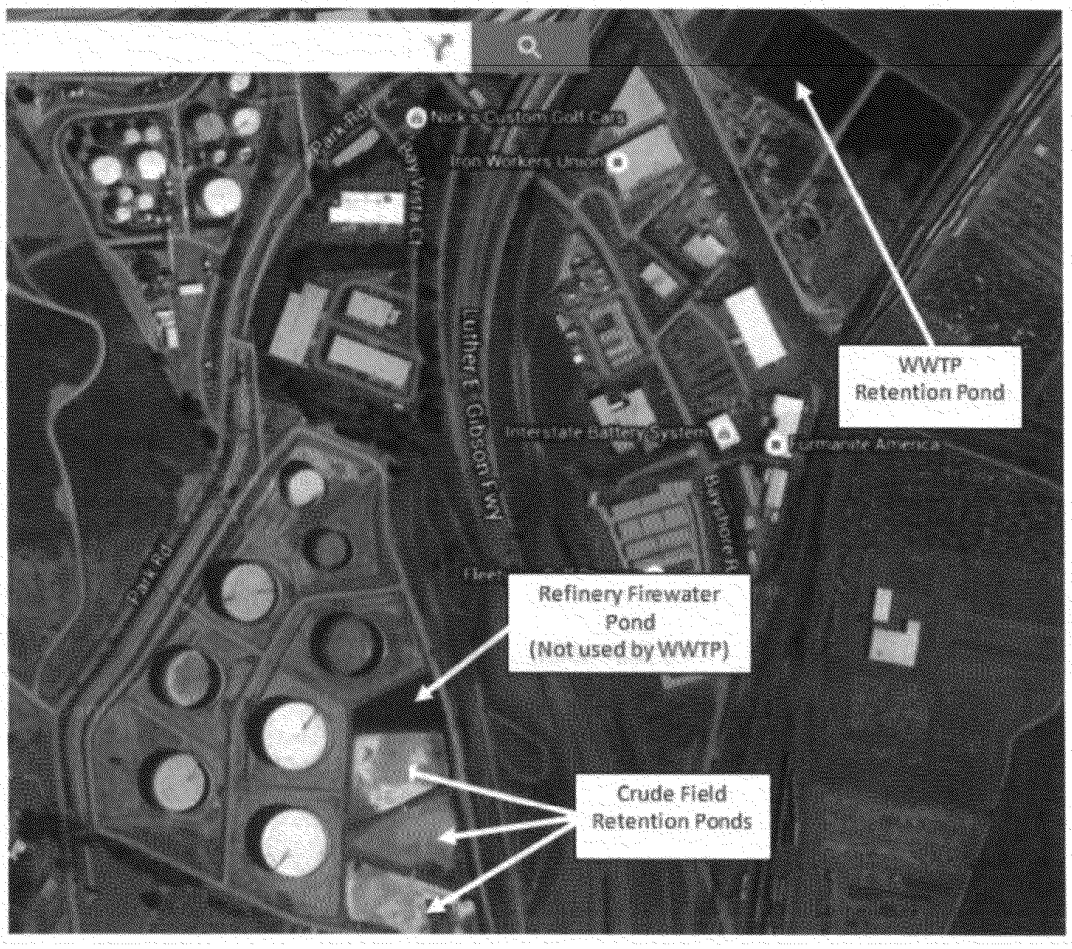
Nick's Custom Golf Cars
Iron Workers Union
Luther E. Gibson Fwy
Interstate Battery System
WWTP Retention Pond
Refinery Firewater Pond (Not used by WWTP)
Crude Field Retention Ponds

CALIFORNIA
Water Boards

EDMUND G. BROWN JR.
GOVERNOR

MATTHEW RODRIQUEZ
SECRETARY FOR
ENVIRONMENTAL PROTECTION

San Francisco Bay Regional Water Quality Control Board

Date: June 4, 2014
CIWQS Place ID: 223950

Valero Benicia Refinery
3400 East Second Street
Benicia, CA 94510
ATTN: Sky Bellanca

Sent via e-mail: Sky.Bellanca2@valero.com

SUBJECT: CONCURRENCE WITH REVISED WASTE WATER TREATMENT POND (WWTP) SEDIMENT EVALUATION AND INTERIOR WELL EVALUATION AND PROPOSED WATER QUALITY PROTECTION STANDARDS (WQPS), VALERO BENICIA REFINERY, CONTRA COSTA COUNTY

Dear Ms. Bellanca,

This letter provides Water Board staff concurrence with the subject WWTP Evaluation and Proposed WQPS, submitted by URS Corporation on May 15, 2014 in compliance with Provisions 5 and 6 of Waste Discharge Requirements (WDR) Order No. R2-2013-0033. The original submittal, dated January 14, 2014, was amended based on Water Board staff comments. Provision 5 required Valero to evaluate sediment sampling procedures for the WWTP ponds, and determine if such sampling is still needed. Provision 6 required Valero to update WQPS for the WWTP and Crude Oil Storage Area; however, Valero also chose to update WQPS for the entire facility, including the Main Refinery.

To comply with Provision 5, URS conducted a risk-based evaluation to determine the potential for adverse ecological effects to Sulphur Springs Creek (Creek). First, the historical groundwater and sediment analytical data were evaluated for the WWTP, as well as historical surface water data from the Creek. Then contaminant concentrations were compared with WQPS based on 2013 Environmental Screening Levels (ESLs). The results of the evaluation found:

1) Groundwater in the WWTP area flows away from the Creek, indicating that a potential discharge from the WWTP would not reach the Creek,
2) None of the WQPS set for contaminants of concern have been exceeded in any wells within 100 feet of the Creek,
3) Concentrations in the Creek have not exceeded applicable ESLs downgradient of the WWTP since 2007, and
4) Concentrations in sediment samples collected annually from the WWTP ponds have not exceeded ESLs since 2005.

Based on these data, URS proposed that WWTP sediment sampling is no longer needed, as potential groundwater impacts from the WWTP on the Creek will continue to be monitored as part of the site-wide monitoring program.

ATTACHMENT 6

To comply with Provision 6, URS initially proposed that all site groundwater monitoring wells be divided into two groups based on their proximity to either Beaver Creek or Sulphur Springs Creek (Creek): wells within 100 feet of either Creek are referred to as Shoreline wells, and wells greater than 100 feet from either Creek are referred to as Interior wells. Shoreline wells are assumed to be exposed to undiluted groundwater, and will be compared to conservative estuarine ESLs. Interior well WQPS used a groundwater attenuation factor (AF) of 10 applied to the appropriate ESLs, based on the observation that contaminant levels in surface water are much lower than those detected in Interior wells. Water Board staff responded in an email dated January 28, 2014, that before a unilateral AF of 10 can be applied to all Interior wells, URS must make sure there is a downgradient Shoreline well between the Interior well and Creek. The concern was that without a downgradient well near a Creek, contamination could go undetected and potentially impact the Creek.

URS reevaluated each Interior monitoring well and determined that wells 403, 404, and 508 will be evaluated using the Shoreline well WQPS. Otherwise, all remaining Interior wells will be evaluated using the Interior well WQPS which has an additional AF of 10.

Water Board staff concur that Provisions 5 and 6 of Order No. R2-2013-0033 have been adequately addressed. However, since Valero has opted to use the ESLs as their WQPS, the WQPS should also be updated whenever the ESLs are updated in the future unless agreed upon otherwise.

Please contact Alyx Karpowicz at (510) 622-2427, or by email at akarpowicz@waterboards.ca.gov if you have any questions.

Sincerely,

Terry Seward for

Digitally signed by Terry Seward
DN: cn=Terry Seward, o=SF Water Board, ou=GWPD, email=Tseward@waterboards.ca.gov, c=US
Date: 2014.06.04 11:30:43 -07'00'

Bruce H. Wolfe
Executive Officer

cc: Gay Howard – Stantec, Gay.Howard@stantec.com
Nicole Reese – URS, Nicole.Reese@urs.com

From: Lazorik, John
Sent: Thursday, March 31, 2011 8:56 AM
To: 'SFeldste@dtsc.ca.gov'; 'Ignacio Dominguez'; 'DPlain@dtsc.ca.gov'
Cc: Coleman, Gary; Lopez, Todd (Environmental); Howe, Chris; 'Rosegay, Margaret'
Subject: Valero Benicia Refinery - 3/16/10 Facility Inspection

To All:

Valero received your letter dated March 21, 2011 effectively withdrawing the alleged violation associated with the management of satellite accumulation drums during the EADC line repair job. We very much appreciate having the opportunity to meet with you and provide additional information necessary to demonstrate our compliance with all applicable regulations. We recognize that the satellite accumulation arrangement utilized during this job was not necessarily typical of what DTSC inspectors encounter at other facilities but that Valero took appropriate steps to assure the drums were managed in a manner that protected human health and the environment and in compliance with satellite accumulation requirements.

We also appreciate the Department's time and effort to make a separate site visit of Valero's heat exchanger bundle cleaning pad to gain a better understanding of its operation and how it is integrated with the overall refinery wastewater conveyance and treatment system, subsequently leading to the Department's withdrawal of this alleged violation also.

It was a pleasure working with you in a cooperative manner to resolve these compliance issues.

Regards,

John Lazorik

Environmental Department
Valero Benicia Refinery
3400 East Second Street
Benicia, CA 94510
PH: 707-745-7660 Fax: 707-745-7600

ATTACHMENT 7

BUNDLE CLEANING PAD OPERATING REQUIREMENTS

State and federal hazardous waste regulations apply to the operation and management of this bundle cleaning pad. Misuse of the pad may be in violation of these regulations and subject to enforcement actions including significant fines.

- **The pad shall be washed so that no residue remains on the pad surface after each cleaning job or at the end of each shift.**
- **Any solids remaining on the pad shall be collected and placed in drums that are labeled with a description of the contents AND the accumulation start date.**
- **Special attention should be given to prevent over spray outside of the containment pad.**
- **During transportation of equipment in and out of the pad, efforts should be made to ensure that solids are not dropped or tracked onto the road and if any solids are dropped they are quickly cleaned up.**
- **When possible, non-hazardous residuals from cleaning activities should be segregated from hazardous wastes and placed in separate labeled containers. Any non-hazardous residuals that are washed into the trough become classified as hazardous waste and must be disposed of as such.**
- **No items should be left or abandoned on pad without some form of identification that describes the material and identifies the owner.**
- **For after hours access to the pad, contact Security.**

For questions regarding pad use, call:

- **Gary Coleman @ 7403**
- **John Lazorik @ 7660**
- **PSC (Pad Operator) 249-0285**

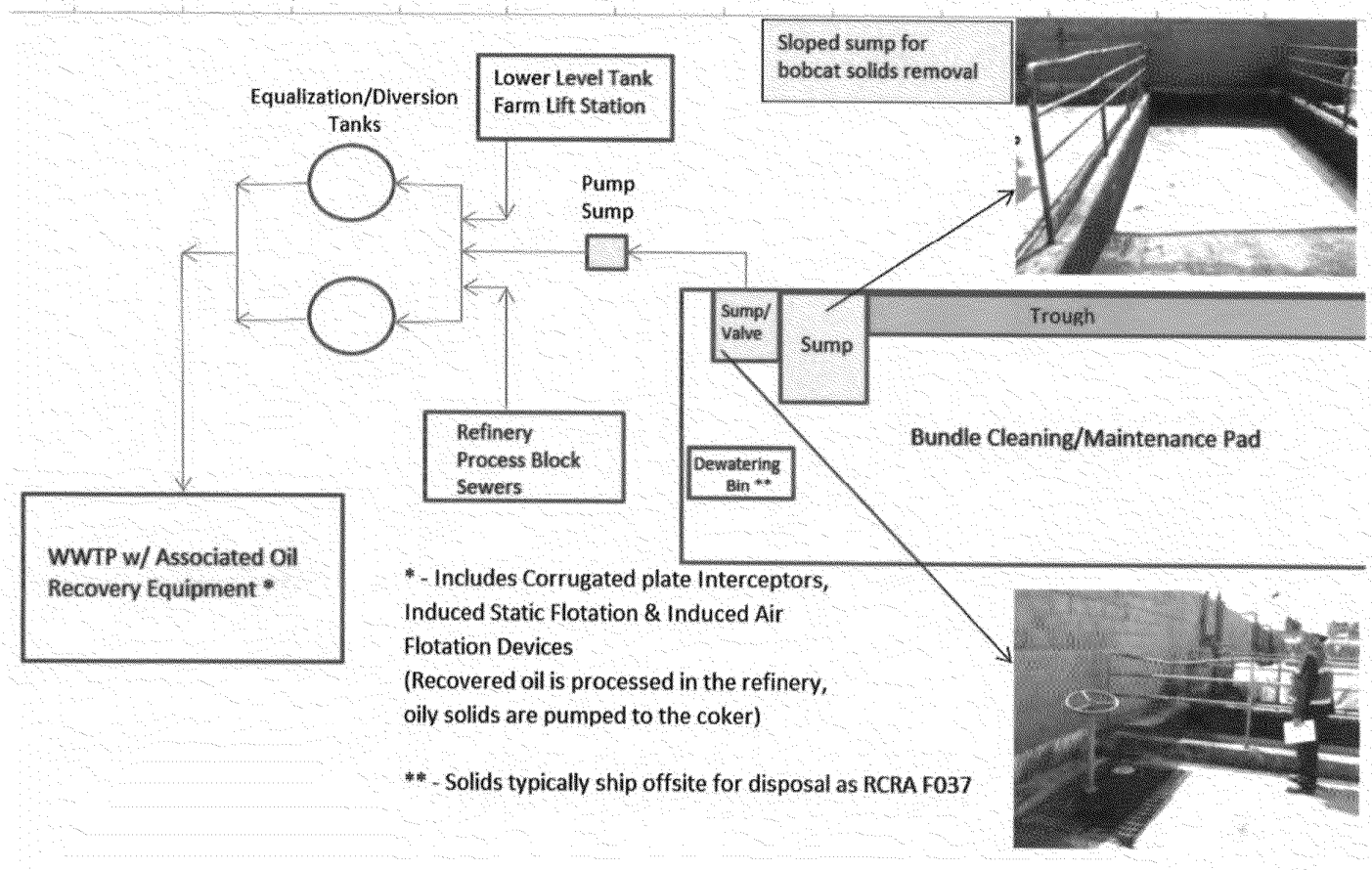

ATTACHMENT 8

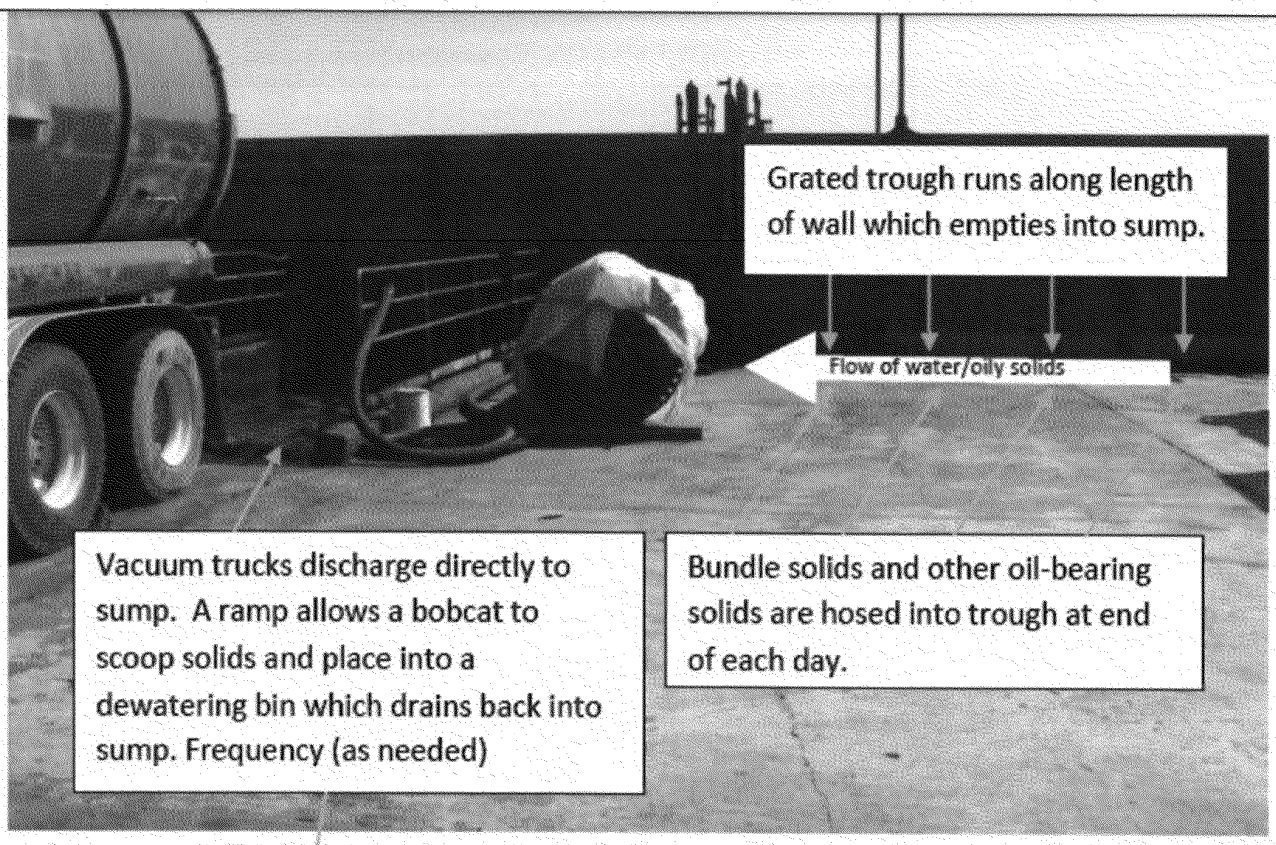

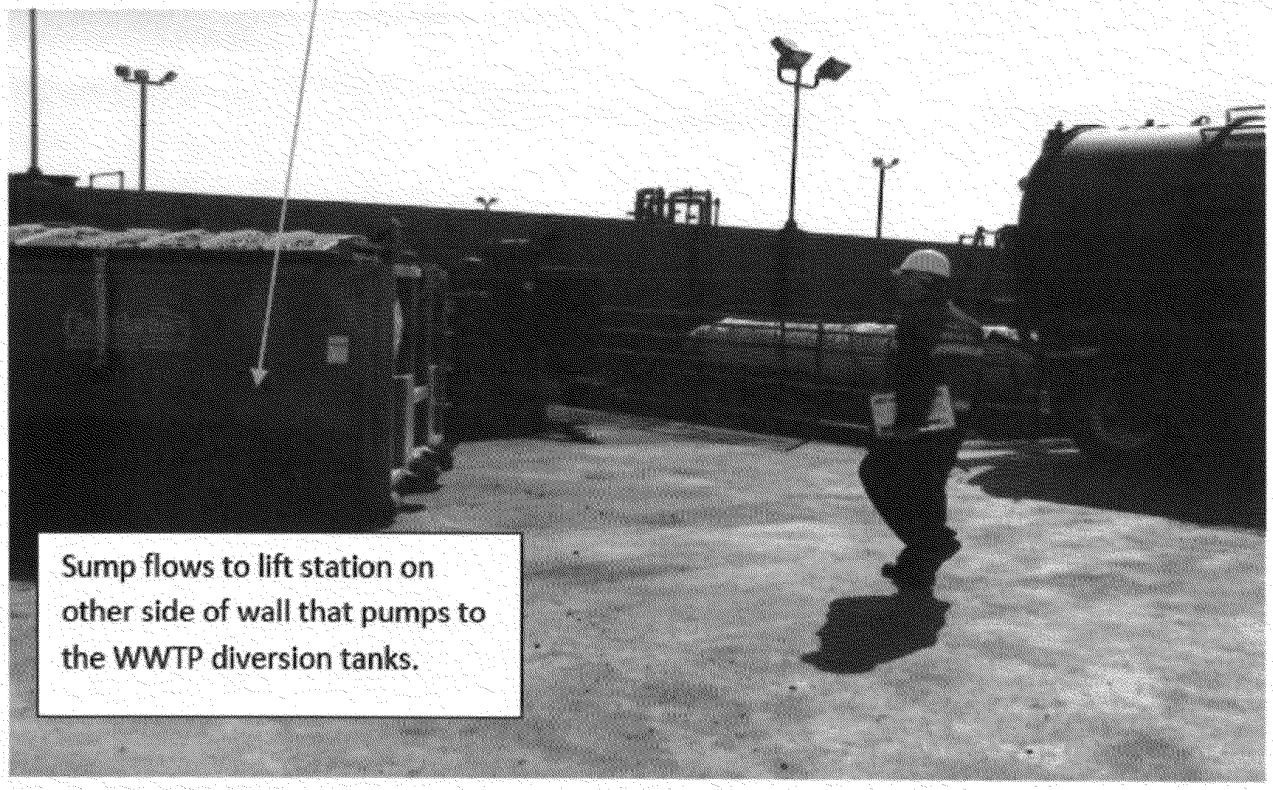

If heat exchanger bundle solids are collected off the pad and placed into containers, the container is labeled as K050. If ANY solids are washed into the trough or sump, when they are removed, they are classified as F037. Standard practice is to wash solids into the trough then to the sump for easy removal.

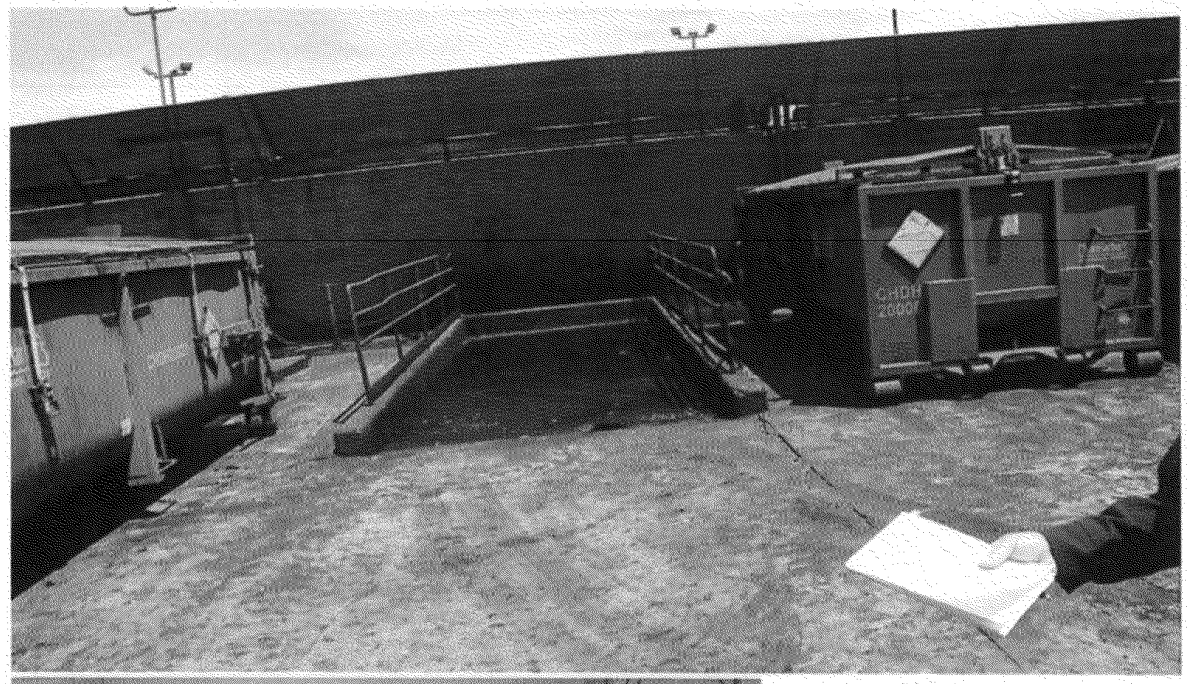

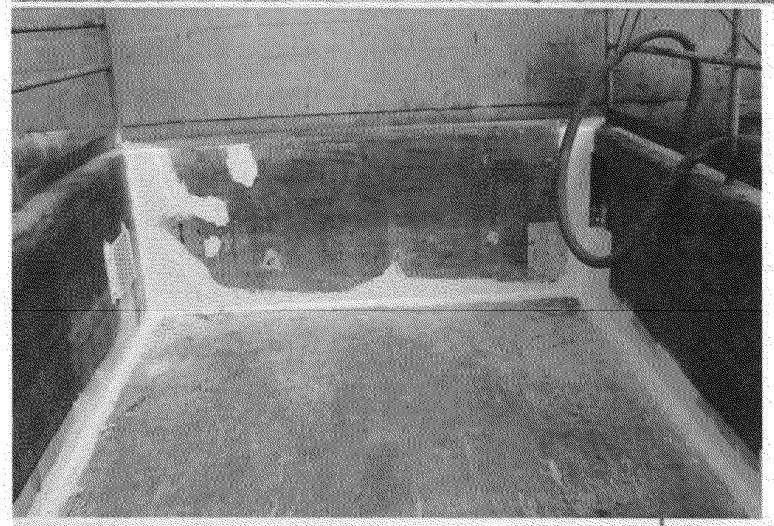

Mr. Rob Short
Managing Director
Tetra Process Services, L.C.
2204 Timberloch Place, Suite 270
The Woodlands, TX 77380

Dear Mr. Short,

Thank you for your letter dated February 8, 2002 in which you posed twelve detailed questions concerning the regulatory status of oil-bearing hazardous secondary materials under the Resource Conservation and Recovery Act (RCRA). Specifically, you requested clarification on numerous aspects of the exclusion at 40 CFR section 261.4(a)(12)(i), which was promulgated in the August 6, 1998 *Federal Register* (63 *FR* 42110). I apologize for the delay in responding to your questions. Because of the variety and detail of your questions, I have chosen to enclose, as separate document, each of your questions along with our corresponding response.

I would like to reiterate that under Section 3006 of RCRA (42 U.S.C. Section 6926), individual States can be authorized to administer and enforce their own hazardous waste programs in lieu of the federal program. Please also note that under Section 3009 of RCRA (42 U.S.C. Section 6929) States retain authority to promulgate regulatory requirements that are more stringent than federal regulatory requirements. While I have tried to provide general guidance on the RCRA program for the issues you raised in your letter, I recommend that you consult the agency implementing the authorized RCRA subtitle C program in the state where your specific facility or activity is located to help determine the status of the waste stream in question.

Finally, let me clarify that in your questions you use the term "residuals" to describe materials that may be eligible for the exclusion at 261.4(a)(12)(i). I refer to these materials as "oil-bearing hazardous secondary materials" in my responses, consistent with the language of that regulation. I use the term "residuals" to describe any materials that are not ultimately inserted into the refining process, and are discarded. If you have any further questions, please contact Ross Elliott of my staff at 703-308-8748.

Sincerely yours,

Robert Springer, Director
Office of Solid Waste

Enclosure

RO 14677

ATTACHMENT 9

ENCLOSURE

Questions from Mr. Rob Short, Tetra Services, L.C., February 8, 2002 and Answers from the Environmental Protection Agency, Office of Solid Waste

Tetra is requesting written clarification from the EPA regarding issues identified within the following sections of this correspondence. The identified issues address the regulatory status of Residuals which are managed, transferred, stored, and processed under the conditions of the Exclusion. The identified issues also address the regulatory status of equipment used to manage, transfer, store, and process Residuals under the conditions of the Exclusion.

Issues Regarding the Management of Residuals Under the Exclusion

1. What Residuals Qualify Under the Exclusion? - *It is Tetra's interpretation that the Exclusion is applicable to all Residuals (i.e., sludges, by-products, or spent materials) that result from a petroleum refining operations (SIC code 2911) and are to be inserted into the petroleum refining process (SIC code 2911). Applicability of the Exclusion extends to Residuals which exhibit a hazardous characteristic (e.g., D018) and Residuals which are listed under subpart D of RCRA (e.g., F037, F038, K048 - K052, and K169 - K172). However, the Exclusion is limited to Residuals resulting from petroleum refining operations (SIC code 2911).*

Answer: First, your question describes the exclusion at 40 CFR 261.4(a)(12)(i) as applying to "all residuals" from petroleum refining operations; a more accurate statement is that the exclusion applies to *oil-bearing hazardous secondary materials* that are generated from petroleum refining operations *and* that can be legitimately recycled at a petroleum refinery, under the conditions set out in the exclusion. In the final rule published in the August 6, 1998 *Federal Register* (63 *FR* 42110), while we did not specify a minimum oil content for these oil-bearing hazardous secondary materials, we did stress that there must be some recoverable amount of hydrocarbons to make the recycling legitimate. (See also answer to Question 12 below).

Regarding the types of oil-bearing hazardous secondary materials to which the exclusion applies, generally it does not matter whether the materials are hazardous because they are listed in 40 CFR, Part 261, subpart D, or because they exhibit a hazardous characteristic under Part 261, Subpart C. The exclusion applies to oil-bearing *hazardous* secondary materials, irrespective of whether they are listed or exhibit a hazardous characteristic. Of course, certain residuals from recycling (that are discarded) may be regulated differently depending upon whether the initial material met a listing, versus exhibited a characteristic (*e.g.*, see answer to Question 2 below regarding use of the F037 code).

Finally, I note that you have included the waste codes K171 and K172 in your question, corresponding to the spent hydrotreating (K171) and hydrorefining (K172) petroleum catalysts, indicating that these particular wastes might be recycled under the exclusion in 40 CFR 261.4(a)(12)(i). We discussed the recycling of these catalysts a great deal in the proposed and

ED_001593_00015893

final rules[1]. However, we did not specifically discuss recycling these two listed spent catalysts as "oil-bearing hazardous secondary materials" under 261.4(a)(12)(i)[2], beyond stating in the preamble that this exclusion can apply to "..any oil-bearing material generated at a petroleum refinery, including oil-bearing wastes currently regulated as listed hazardous wastes (e.g., K048–K051), and including refinery wastes newly listed under today's rulemaking that are suitable for insertion into normal petroleum refining operations." 63 *FR* at 42118. Therefore, I would make the following clarification.

First, if petroleum catalysts are removed from one particular refining process, but still can be used elsewhere in the refining process for continued use as a catalyst, then these materials are not wastes, irrespective of the exclusion at 261.4(a)(12)(i). Second, where the catalysts are spent and removed from the refining process either for disposal or recycling, but oil is first recovered and inserted back into the refining process, this oil can be considered a "recovered oil" (see 40 CFR 261.4(a)(12)(ii)) and is excluded from the definition of solid waste (although the spent catalyst retains its original waste code, K171 or K172). Finally, the exclusion at 40 CFR 261.4(a)(12)(i) does not preclude a refinery owner/operator from viewing the entire spent catalyst as an "oil-bearing hazardous secondary material," in those situations where some type of processing (as discussed in response to Question 2 below) yields material that is inserted into the refining process (e.g., oil), and where the remaining material is discarded (in this case, as F037 per this exclusion).

Let me note that the record supporting the August 6, 1998 rulemaking reflects the fact that in many instances, oil is *added to,* not *recovered from*, spent petroleum catalysts, in order to reduce the pyrophoric (self-heating) nature of these wastes. 63 *FR* at 42157. Therefore, I stress that the recycling must be legitimate in all instances under all of the scenarios described above. Furthermore, under 261.4(a)(12)(i), I believe it is unlikely that a refinery would insert bulk spent catalyst into a refining process such as a distillation unit or a petroleum coker, for the purpose of oil recovery, due to obvious technical limitations. In the example of the coker, such insertion could also significantly degrade coke quality, a possible indication of sham recycling. 63 *FR* at 42125. However, because there still may be situations where hydrocarbons can be legitimately recovered either from spent petroleum refining catalyst, or other oil-bearing material that contains spent petroleum refining catalyst, the exclusion at 261.4(a)(12)(i) could be applied. An example might be where the catalyst is subjected to some preprocessing steps, after which the oil is returned to petroleum refining process for further refining. I also note that my office presently

---

[1]See 63 *FR* at 42116. See also numerous comment responses regarding catalyst recycling issues in *Petroleum Refining Listing Determination, Proposed Rule Response to Comment Document, Part IV*, June 1998.

[2]Several types of catalyst recycling were discussed in this rulemaking: 1) reclamation ('regeneration') of spent petroleum catalysts for reuse as catalysts; 2) reclamation of metals from spent catalysts, such as vanadium; and 3) a national variance from the definition of solid waste for partially-reclaimed metals from the metals recovery process.

ED_001593_00015893

is reviewing a petition for rulemaking on issues that may impact how this exclusion is applied to spent catalysts, particularly with regard to the classification of spent catalyst that meets the K171 or K172 listing description, but could be reclassified as F037 should the generator apply the exclusion described above. Any future action the Agency proposes to take on this matter will be duly noticed to the public.

2. Is the Exclusion Applicable to Residuals Requiring Processing Prior to Insertion into the Petroleum Refining Process? - *It is Tetra's interpretation that the Exclusion is applicable to all Residuals (i.e., sludges, by-products, or spent materials), including Residuals that require processing or reclamation prior to insertion of the entire Residual or a reclaimed portion of the Residual, into the petroleum refining process.*

Answer: The Agency has acknowledged that some oil-bearing hazardous secondary materials cannot be directly inserted into particular petroleum refining processes, and therefore may require some type of processing or preparation beforehand (*e.g.*, centrifugation, desorption, settling, etc.). 63 *FR* at 42113-42114, 42128. We generally view these activities as part of normal petroleum refining activities. During the rulemaking, we were particularly concerned with the management of any discarded residuals generated from the processing of oil-bearing hazardous secondary materials, and thus developed an approach to ensure that these discarded residuals continue to be managed appropriately. In responding to public comments when the exclusion was promulgated, we said:

> "In the final rule, EPA clarifies that the exclusion for oil-bearing secondary materials returned to the refining process only extends to the materials actually re-inserted into the refinery process. In cases where oil-bearing secondary materials are reclaimed prior to re-insertion, any residuals that may result from the reclamation process and that are not returned to the refinery process retain the hazardous waste listing and must be managed as hazardous wastes. In the final rule, the Agency is modifying the descriptions for the F037 waste code to include any residuals from the processing of listed (refinery) hazardous wastes."[3]

The language above was intended to clarify that residuals that are not ultimately inserted are not excluded, and that these discarded residuals are classified as F037 if the original oil-bearing hazardous secondary material was a listed hazardous waste. I would emphasize that the exclusion applies to the oil-bearing hazardous secondary materials from the point they are generated, even though some preprocessing may be required before insertion, and even if this preprocessing generates residuals that are not inserted (and are thus not excluded under this provision).

---

[3]Section II.B.2., Notice of Data Availability (NODA), Response to Comment Document, Part II, June 1998.

ED_001593_00015893

3. Are Residuals Qualifying Under the Exclusion, Considered Generated Wastes? - *It is Tetra's interpretation that the Exclusion, similar to other exclusions under 40 CFR 261.4, eliminates the "point-of-generation" for qualifying Residuals. Therefore, a Residual which is managed under the conditions of the Exclusion is never "generated," and is exempt from the definition of solid waste.*

Answer: The exclusion from the definition of solid waste for oil-bearing hazardous secondary materials under 40 CFR 261.4(a)(12)(i) applies at the point the material in question is first generated, and continues to apply provided the conditions set out in the exclusion are met. If the applicable conditions are satisfied, we agree that the secondary material was never a solid waste for the purposes of RCRA subtitle C. As stated above in the answer to Question 2, the exclusion applies to the oil-bearing hazardous secondary materials from the point they are generated, even though some preparation or processing may be required before insertion. Also, any residuals from this processing that are not inserted are not excluded, and would be classified as F037 (if the original oil-bearing hazardous secondary material was also a listed hazardous waste).

4. Does the Point of Insertion Into the Petroleum Refining Process Influence the Ability of a Residual to Qualify Under the Exclusion? - *It is Tetra's interpretation that the Exclusion places no limitations on location in the petroleum refining process in which a qualifying Residual can be inserted. The point of insertion has no bearing on the ability of a Residual to qualify under the Exclusion.*

Answer: While the language in 40 CFR 261.4(a)(12)(i) does not set out specific 'limitations' on the point of insertion into the petroleum refining process for an oil-bearing hazardous secondary material, there are some implicit limitations. As discussed in the preamble to the August 6, 1998 *Federal Register*, the recycling of oil-bearing materials under this exclusion must be legitimate. 63 *FR* at 42121, 42125, 42127. Therefore, the point of insertion into the petroleum refining process must be consistent with the type of oil-bearing materials being recycled, such that legitimate recovery of hydrocarbons in an ongoing production process is occurring. Put another way, the oil-bearing hazardous secondary materials must be "suitable for insertion into normal petroleum refining operations." 63 *FR* at 42118.

Issues Regarding the Transfer of Residuals Under the Exclusion

5. Can Qualifying Residuals be Transferred Under the Exclusion? - *It is Tetra's interpretation that the transfer of qualifying Residuals is allowed between petroleum refineries (SIC Code 2911). However, the transfer of Residuals can not involve the use of intermediate "non-refinery" facilities (non-SIC code 2911 facilities). Such transfer is not limited beyond the ability of the petroleum refineries to demonstrate that the Residuals are not being accumulated speculatively or managed under conditions constituting land placement prior to insertion into the petroleum refinery process. In addition, such transfer can be conducted between co-owned petroleum refineries (intra-company transfer) and non co-owned petroleum refineries (inter-company transfer).*

ED_001593_00015893

Based on the same considerations, there appears to be no limitation imposed by the Exclusion regarding the number of times a Residual is transferred on-site or between petroleum refineries (SIC code 2911), as long as it can be demonstrated that such transfers are being conducted within the realm of on-going production in the petroleum refining process.

Answer: The specific language of 40 CFR 261.4(a)(12)(i) regarding the 'transfers' you describe, reads:

> "Oil-bearing hazardous secondary materials may be inserted into the same petroleum refinery where they are generated, or sent *directly* to another petroleum refinery, and still be excluded under this provision." [emphasis added]

The term "directly" is further described in the preamble to the August 6, 1998 final rule where we stated:

> "The Agency is also requiring that the materials excluded under this provision of today's rule be returned directly to a refinery for insertion. While this is not an issue if materials are recycled onsite, EPA has concerns...about situations where these materials are generated at one refinery for insertion into another, but are not directly sent and instead are sent to an intermediate non-refinery facility for processing." 63 *FR* at 42126-7.

There is no requirement or limitation under 261.4(a)(12)(i) regarding the ownership of either the petroleum refinery where the hazardous secondary materials are generated, or the refinery to which these materials are transferred. Such transfers may occur within the same company, or between companies, without affecting the applicability of this exclusion.

You are also correct that 261.4(a)(12)(i) does not place any specific limit on the number of transfers that may occur under this exclusion. However, the recycling must be *legitimate* in order for the exclusion to apply. Numerous transfers of the same hazardous secondary material, particularly where no hydrocarbon has yet been recovered, should raise concerns as to whether such transfers represent legitimate recycling (*i.e.*, ongoing manufacturing). In addition, numerous transfers could make it more difficult for the generator to demonstrate that the material is not being speculatively accumulated. In responding to comments regarding the speculative accumulation condition in 40 CFR 261.4(a)(12)(i), we stated:

> "Under section 261.2 (f), persons storing excluded materials have the burden of demonstrating (in an enforcement action) that they are meeting the terms of the exclusion. Refineries consequently must be able to demonstrate the duration of storage of all secondary materials which are excluded (including, but not limited to, those processed by quench coking). The rule does not specify a particular record-keeping regime in order to provide flexibility for each facility to be able to demonstrate that there is no speculative accumulation in a manner best fitting the facility's operating practices."[4]

---

[4]Section II.B.2.d., Notice of Data Availability (NODA) Response To Comment Document, Part II, June 1998

ED_001593_00015893

6. What Types of Notification and Record-Keeping are Required for Off-Site Transfer of Residuals Under the Exclusion? - *It is Tetra's interpretation, that Residuals qualifying under the Exclusion are not considered solid wastes, and are excluded from the definition of solid waste at the "point-of-generation." Based on these conditions, Residuals are considered an intermediate product or feedstock material within the petroleum refining sector (SIC Code 2911) and do not require manifesting under RCRA regulations. However, Residuals transferred within the "petroleum refining sector," require conventional bills of lading, and shipments must comply with applicable state regulatory requirements and Department of Transportation regulations, which may include recordkeeping, specific authorized packing, and placarding.*

Answer: You are correct that materials excluded under 40 CFR 261.4(a)(12)(i) are not solid wastes, for purposes of subtitle C regulation, and therefore are not (by definition) hazardous wastes from the point of generation. Therefore, requirements that normally apply to the management of hazardous wastes, such as notification or the use of a hazardous waste manifest, do not apply to these materials, provided the conditions of the exclusion are satisfied. As noted above in the answer to Question 5, under 40 CFR 261.2(f) certain documentation would be necessary to demonstrate that the conditions of an exclusion have been met.

Issues Involving the Storage of Residuals Under the Exclusion

7. Can Residuals Qualifying Under the Exclusion be Stored Beyond 90-days? - *It is Tetra's interpretation of the Exclusion, that 90-day storage requirements are not applicable to qualifying Residuals. Residuals qualifying under the Exclusion are exempt from the definition of solid waste. Therefore, 90-day storage requirements do not apply to Residuals, provided the Residuals are not accumulated speculatively or managed under conditions constituting land placement prior to insertion into the petroleum refining process.*

Answer: You are correct that materials excluded under 40 CFR 261.4(a)(12)(i) are not solid wastes, for purposes of subtitle C regulation, and therefore are not (by definition) hazardous wastes from the point of generation. Therefore, requirements that normally apply to the management of hazardous waste, such as the 90-day storage requirements in 40 CFR 262.34, do not apply to these materials, provided the conditions of the exclusion are satisfied.

8. What is the Regulatory Status of Residuals Stored Prior to Processing for Insertion into the Petroleum Refining Process? - *It is Tetra's interpretation that the Exclusion is applicable to all Residuals (i.e., sludges, by-products, or spent materials), including Residuals that require processing or reclamation prior to the insertion of the entire Residual, or a reclaimed portion of the Residual, into the petroleum refining process. Therefore, Residuals which require processing or reclamation, are exempt from the definition of solid waste under the Exclusion. Obviously, storage is probable when processing or reclamation activities are conducted. The storage of such Residuals, prior to processing or reclamation, does not alter the regulatory status of those Residuals, provided the Residuals are not accumulated speculatively or managed under conditions constituting land placement.*

ED_001593_00015893

Answer: The storage you reference of the excluded materials prior to either direct insertion, or prior to some processing prior to insertion, into the petroleum refining process would not be subject to regulation under subtitle C, provided the conditions of the exclusion are met. As discussed above in response to Question 2, we acknowledged that some oil-bearing hazardous secondary materials may be unsuitable for direct insertion, and therefore may require some processing prior to insertion into the petroleum refining process. Therefore, because materials that are excluded under 40 CFR 261.4(a)(12)(i) are not solid wastes for purposes of subtitle C regulation from the point of generation (see answer to Question 3 above), storage of these materials is not regulated under subtitle C irrespective of whether or not some degree of centrifuging, filtering, or other processing has to occur prior to insertion into the petroleum refining process.

9. What is the Regulatory Status of Tanks and Containers Used to Store Residuals Qualifying Under the Exclusion? - *It is Tetra's interpretation that the Exclusion is applicable to all Residuals, including Residuals that require processing or reclamation prior to the insertion of the entire Residual, or a reclaimed portion of the Residual, into the petroleum refining process. Such Residuals are exempt from the definition of solid waste under the Exclusion, and the storage of such Residuals is not regulated under RCRA. Based on these considerations, tanks used to store Residuals qualifying under the Exclusion are not regulated under RCRA, provided the Residuals are not accumulated speculatively or managed under conditions constituting land placement.*

Answer: That is correct. Tanks and containers used to store oil-bearing hazardous secondary materials qualifying under the exclusion are not regulated under RCRA because these materials are not solid wastes, and therefore are not hazardous wastes, provided the conditions of the exclusion are being met.

Issues Involving the Processing of Residuals Under the Exclusion

10. What is the Regulatory Status of Equipment Used to Process Residuals for Insertion Under the Exclusion? - *It is Tetra's interpretation that the Exclusion is applicable to all Residuals, including Residuals that undergo processing or reclamation prior to the insertion of the entire Residual following processing or a recovered portion of the residual following reclamation into the petroleum refining process. In general, a Residual qualifies under the Exclusion based on the intent of inserting either the entire Residual or a portion of the Residual into the petroleum refining process (SIC code 2911), provided the Residual is not speculatively accumulated or managed under conditions constituting land placement. Under the Exclusion, the Residuals would not be considered solid waste, therefore the equipment used to conduct processing or reclamation of the Residual would not be regulated under RCRA.*

Answer: Oil-bearing hazardous secondary materials that are excluded from the definition of solid waste are not hazardous wastes; therefore, the management of these excluded materials (including management in equipment used to process the oil-bearing hazardous secondary materials for insertion) is not subject to the hazardous waste requirements. However, it is

ED_001593_00015893

possible that residual materials may be generated during the reclamation process, which will be disposed, and where these wastes meet the definition of hazardous waste, the applicable hazardous waste requirements must be followed regarding their management.

Also, where oil-bearing hazardous secondary materials are excluded because they are being recycled under 261.4(a)(12)(i), they are viewed as in-process materials in a manufacturing process. Therefore, under 40 CFR 261.4(c), if the equipment that is processing these oil-bearing hazardous secondary materials ceases to be operated, the materials in the unit could become subject to regulation if they remain in the unit for more than ninety days, and the unit in turn may become a waste management unit. (This is a longstanding regulation applicable to situations where a hazardous waste is generated in a manufacturing process unit, and where the waste remains in the unit more than ninety days after the unit "ceases to be operated for manufacturing.") See the November 20, 1995 *Federal Register*; 60 *FR* at 57779-80.

11. Is the Exclusion Applicable to Residuals Processed by Contracted Services Prior to Insertion into the Petroleum Refining Process? - *It is Tetra's interpretation that the Exclusion is applicable to all Residuals, including Residuals that undergo processing or reclamation prior to the insertion of the Residual, or a reclaimed portion of the Residual, into the petroleum refining process. There appears to be no condition imposed by the Exclusion, which restricts the ownership of equipment used to process or reclaim Residuals, as long as such processing or reclamation is conducted on-site at petroleum refining facilities (SIC code 2911).*

Answer: That is correct. The exclusion at 261.4(a)(12)(i) specifies that the oil-bearing hazardous secondary material must be generated at a petroleum refinery, and be inserted into a petroleum refinery, without regard to ownership of either the petroleum refinery or the specific reclamation units or processes located at the petroleum refinery. EPA did clarify, however, that the excluded material being sent from one refinery to another cannot be processed at an intermediate, third party, non-petroleum refinery facility prior to ultimately being inserted into a refining process at a petroleum refinery. In preamble to the August 6, 1998 *Federal Register*, EPA clarified the term "directly" as it is used in the following regulatory text: "Oil-bearing hazardous secondary materials may be inserted into the same petroleum refinery where they are generated, or sent *directly* to another petroleum refinery, and still be excluded under this provision." [emphasis added.] EPA stated that the materials to be recycled must be sent directly to a petroleum refinery in order to be excluded, and cannot be sent to an intermediate non-refinery facility for processing. (63 *FR* at 42126). See answer to Question 5 above; see also the Agency response beginning on Page II-62, *Petroleum Refining Listing Determination Proposed Rule Response to Comment Document, Part I, June 1998.*

ED_001593_00015893

12. Does the Oil Content of a Residual Influence the Applicability of the Exclusion? - *It is Tetra's interpretation that the applicability of the Exclusion is not influenced by the oil content of a Residual. Tetra's interpretation is supported by the EPA's dismissal of comments proposing limits to the Exclusions applicability, based on oil content of Residuals and the recovery efficiency of the petroleum refining process.*

Answer: I disagree with your statement that the applicability of the exclusion is "not influenced by the oil content of a residual," where such a statement suggests that there can be hazardous secondary materials generated at a refinery with *zero* oil content, that would be eligible for this exclusion. While it is true that EPA expressly chose not to specify a *minimum* oil content as a condition in the exclusion, we did state in the preamble to the final rule that there had to be *some* oil recovery. Specifically, we said

> "...the Agency believes it is fundamental to this exclusion that there actually be oil recovered for further refining when these oil-bearing hazardous secondary materials are used in the quenching process. To the extent there is no recovery, or drastically inefficient recovery, the operation could be a type of sham recycling, as discussed earlier." 63 *FR* at 42127.

The rationale for EPA choosing not to establish either a minimum oil content condition, or a "recovery efficiency" requirement, is discussed on the same page of the *Federal Register* cited above, and in the comment response document entitled Notice of Data Availability (NODA) Response to Comment Document Part II, June 1998 (prepared as part of the final rule supporting documents.)

ED_001593_00015893

9441.1992(37)

United States Environmental Protection Agency
Washington, D.C. 20460
Office of Solid Waste and Emergency Response

October 29, 1992

Mr. Richard S. Wasserstrom
Miles and Stockbridge
Metropolitan Square
1450 G Street, N.W., Suite 445
Washington, D.C. 20005

Dear Mr. Wasserstrom:

This is in response to your letter of September 10, 1992, in which you wanted a clarification of the "no land disposal" condition as it applies to the recycling of coke by-produce residues (40 CFR 261.4(a)(10)). Specifically, you want to know in what kinds of units recycling operations can be performed (prior to the residuals being reinserted into a coke oven or mixed with coal tar) and still qualify for this no land disposal condition.

The Agency agrees with your concern that some members of the regulated community may not be complying properly with the no land disposal provision in the coke by-products recycling exclusion. Briefly, the Agency intends for facilities in the coke by-products industry to be able to recycle hazardous waste to coke ovens, the tar recovery process, or coal tar. During the development of the final coke rules (57 FR 27880, June 22, 1992, and 57 FR 37284, August 18, 1992), the Agency researched recycling of these residuals and determined that the technology existed to recycle several residuals in this industry without the residuals becoming part of the "waste disposal problem" (57 FR 27880), and thus promulgated the recycling exclusion for coke by-products wastes.

Using the wrong kind of unit for recycling can lead to waste becoming a disposal problem. In particular, open pits or flat or low-walled concrete pads that do not contain the recycled materials effectively are not units that qualify for the recycling exclusion. Where the waste is managed on the ground, or the construction of the unit causes the waste(s) to spill or otherwise be disposed onto the ground, the Agency feels that those units or facilities are

inadequate to perform the recycling task without the wastes being land disposed. However, tanks, containers, and (as you pointed out) containment buildings, when they are designed properly to keep the recycled materials from being emitted beyond the zone of engineering controls, are units that qualify for the recycling exclusion.

The Agency feels that, for the recycling of wastes in this industry, certain criteria must be met. The units used in the recycling operations must be able to keep the recycled materials contained by being properly sealed (in the case of concrete units) or welded (in the case of metal units). The operators must perform the operations in such a way as to prevent releases of recycled materials. Operators of the recycling units must comply with all other applicable requirements, as well (e.g., air emissions, run-on/run-off, etc.).

You should be aware of some factors that may affect the implementation of the rule in specific areas. Some States might not adopt the recycling provisions of the coke rule as promulgated on August 18, 1992, so regulation of the wastes from this industry may be more strictly controlled. In addition, the determination as to whether a specific tank, container, containment building, or other unit meets State design criteria for "no land disposal" is site-specific, and may vary from place to place. While the Agency clearly intends for the units to contain the wastes adequately, the Agency leaves the creation of such site specific criteria to local authorities. Clearly, the Agency does not want to limit the possibility for future process changes that may lead to the recycling of coke by-products wastes in a more efficient manner by setting inflexible guidelines.

Thank you for your inquiry. If you need any further assistance on this topic, please contact Ron Josephson of my staff at (202) 260-4770 or the EPA Regional Office or State agency responsible for implementing the regulations on recyclables.

Sincerely,
Sylvia K. Lowrance, Director
Office of Solid Waste

bcc: Steve Silverman, OGC (LE-132S); Ken Gigliello, OWPE (OS-520); Waste Management Division Directors, Regions II-VI, VIII

RO 11705

UNITED STATES ENVIRONMENTAL PROTECTION AGENCY
WASHINGTON, D.C. 20460

AUG 21 1998

OFFICE OF
SOLID WASTE AND EMERGENCY
RESPONSE

William R. Weissman
Piper & Marbury L.L.P.
1200 Nineteenth Street, N.W.
Washington, D.C. 20036-2430

Dear Mr. Weissman:

Thank you for your letter of May 11, 1998 and for meeting with us to discuss the Utility Solid Waste Activities Group's (USWAG's), Edison Electric Institute's (EEI's) and the American Gas Association's (AGA's) concerns regarding the effects the land disposal restrictions (LDR) treatment standards published on May 26, 1998 may have on cleanup of manufactured gas plant sites. Like you, we are interested in encouraging and facilitating cleanup of manufactured gas plant sites in a way that is both efficient, economical and protective of human health and the environment. Before addressing the specific concerns raised in your letter, we will review some of the general principles that govern application of RCRA to contaminated soil.

As you know, contaminated soil, of itself, is not hazardous waste and, generally, is not subject to regulation under RCRA. Contaminated soil can become subject to regulation under RCRA if the soil "contains" hazardous waste. EPA generally considers contaminated soil to contain hazardous waste: (1) when soil exhibits a characteristic of hazardous waste; and, (2) when soil is contaminated with hazardous constituents from listed hazardous waste above certain concentrations. 63 FR at 28617 (May 26, 1998).

If contaminated soil contains hazardous waste, then it is subject to all applicable RCRA requirements until the soil no longer contains hazardous waste (i.e., until the soil is decharacterized or, in the case of soil containing listed hazardous waste, until EPA or an authorized state determines that the soil no longer contains listed hazardous waste). In some circumstances, soil that no longer contains hazardous waste, while generally not subject to RCRA requirements, will remain subject to the land disposal restrictions. See 63 FR at 28618 (May 26, 1998) and other sources cited therein. This may be the case if contaminated soil from manufactured gas plants exhibits a hazardous characteristic when first generated (i.e., when first removed from the land) and is subsequently decharacterized. Note that if contaminated soil from manufactured gas plant sites does not exhibit a characteristic of hazardous waste or contain listed hazardous waste when first generated (i.e., when first removed from the land), then the soil is not subject to any RCRA requirements, including the land disposal restrictions. 63 FR 28618 (May

Faxback 14283

Printed/Recyclable - Printed with Vegetable Oil Based Inks on 100% Recycled Paper (40% Postconsumer)

26, 1998).[1]

We understand that at some manufactured gas plant cleanup sites, soil is consolidated within an area of contamination prior to being removed from the land (i.e., generated). This practice, and the area of contamination policy generally, is not affected by the May 26, 1998 rulemaking. Contaminated soil may be consolidated within an area of contamination before it is removed from the land (i.e., generated); the determination as to whether the soil exhibits a characteristic of hazardous waste or contains listed hazardous waste may be made after such consolidation. The Agency's most recent guidance on the area of contamination policy is enclosed for your information.

We understand from our discussions that your concerns center around management of contaminated soil that exhibited a characteristic of hazardous waste when first generated but has subsequently been decharacterized. We will address two questions in this letter: (1) what are the Agency's rules and policies concerning land disposal of decharacterized wastes, including decharacterized contaminated soil and (2) when decharacterized contaminated soil remains subject to the land disposal restrictions, what requirements apply prior to land disposal.

1. What are the Agency's rules and policies concerning land disposal of decharacterized wastes, including decharacterized contaminated soil?

Decharacterized waste (and decharacterized contaminated soil) is not hazardous waste, and is generally not subject to the Subtitle C regulations. Nonetheless, as you are aware, under certain circumstances decharacterized wastes (and decharacterized contaminated soils) remain subject to LDR treatment requirements. See generally, Chemical Waste Management v. EPA, 976 F. 2d 2, 13-14 (D.C. Cir. 1992).

When decharacterized wastes (and decharacterized contaminated soils) remain subject to LDR treatment requirements (i.e., as explained above, when the soils exhibit a hazardous waste characteristic when removed from the land) they must meet applicable LDR treatment standards prior to land disposal, before they can be land disposed, (i.e., before they can be placed in a land disposal unit). RCRA 3004(k) defines land disposal to include, but not be limited to, any placement in a landfill, surface impoundment, waste pile, injection well, land treatment facility, salt dome formation, salt bed formation, or underground mine or cave. Furthermore, EPA has found, in other contexts, that open pits, flat or low walled concrete pads that do not effectively

[1] The exception to this general rule is soil contaminated by listed hazardous waste when the listed hazardous waste is land disposed after the effective date of applicable LDR treatment requirements without meeting such applicable requirements. In this case, the contaminated soil would be subject to land disposal restriction treatment requirements regardless of whether it "contained" hazardous waste when first removed from the land unless there is a finding that hazardous constituent levels are sufficiently low so that threats to human health and the environment posed by land disposal of the soil are minimized. See 63 FR at 28618 (May 26, 1998). As we understand the conditions at most manufactured gas plant cleanup sites, we believe this case will seldom be presented during manufactured gas plant cleanups because soil at manufactured gas plant sites is not typically contaminated by listed hazardous waste.

ED_001593_00015893

contain hazardous wastes and hazardous constituents may constitute land disposal. See the enclosed letter from Sylvia Lowrance, U.S. EPA to Richard Wasserstrom dated October 29, 1992. However, EPA's longstanding view is that placement in tanks, containers, and containment buildings is not land disposal. See, e.g., 57 FR 37211 (August 18, 1992) (establishing standards for containment buildings). EPA has established design and operating requirements for tanks, containers and containment buildings used to treat and store hazardous waste. Clearly, units used for treatment or storage of decharacterized contaminated soil which meet these requirements would not be considered land disposal units and may be used to treat or store decharacterized contaminated soil without the approval of EPA or an authorized state. However, since decharacterized contaminated soil is no longer subject to regulation as hazardous waste (except, potentially, for land disposal treatment requirements), treatment and storage units used to manage decharacterized contaminated soil are not hazardous waste management units and do not have to be designed or operated in accordance with RCRA Subtitle C hazardous waste regulations or receive hazardous waste permits. If decharacterized contaminated soil will be treated or stored in a unit which is not a tank, container, or containment building, EPA or an authorized state should make a site-specific determination as to whether or not placement of decharacterized contaminated soil in the unit constitutes land disposal. In making such determinations, in addition to the mandatory consideration of the definition of land disposal in section 3004(k), EPA will consider (and recommends that authorized states similarly consider) the relevant requirements established by the Agency for tanks, containers, and containment buildings and, if these requirements are modified, whether the treatment or storage unit will prevent or control unacceptable releases of decharacterized contaminated soil and hazardous constituents to the environment. These determinations should be made in the context of your on-going MGP site cleanups and should be included in the public notices which are typically part of cleanup processes. We recognize that determinations about containment units will likely be made predominantly by authorized states and that due to site- and waste-specific variability containment units will have to accommodate the variety of conditions that may be presented during cleanup of MGP sites.

2. When decharacterized contaminated soil remains subject to the land disposal restrictions, what requirements apply prior to land disposal ?

When decharacterized contaminated soil remains subject to the land disposal restrictions, three types of requirements apply. First, the soil must be treated to meet applicable land disposal treatment standards prior to land disposal. Second, as discussed above, prior to land disposal the soil must be treated or stored in an appropriate type of unit (i.e., a unit that is not a land disposal unit). Third, to ensure that applicable land disposal treatment standards are met, certain tracking, paperwork and other requirements must be met.

(a) Treatment to meet applicable land disposal treatment standards. As just noted above, like any other material subject to the land disposal restrictions, decharacterized soils from MGP cleanup sites must be treated to meet applicable land disposal restriction treatment standards prior to land disposal. In the case of contaminated soils subject to the land disposal

ED_001593_00015893

restrictions, generators may choose between meeting the universal treatment standard for the contaminating hazardous waste or meeting the alternative soil treatment standards. For decharacterized contaminated soils, meeting the universal treatment standard for the contaminating hazardous waste would require treatment of the formerly characteristic constituent and all underlying hazardous constituents to the universal treatment standards. Meeting the alternative soil treatment standards would require treatment of the formerly characteristic constituent and all underlying hazardous constituents to reduce constituent concentrations by 90 percent or to achieve ten times the universal treatment standard. Note that, as with any other material subject to the land disposal restrictions, contaminated soil may qualify for treatment variances under certain circumstances, see 40 CFR 268.44.

(b) Storage and treatment prior to land disposal. As discussed above, although decharacterized contaminated soil is not hazardous waste and, generally, is therefore not subject to RCRA Subtitle C requirements, because it remains subject to the land disposal restrictions, it must be stored and treated in appropriate units (i.e., units that are not land disposal units) until treatment standards are met.

(c) Tracking, paperwork and other requirements. If decharacterized contaminated soil is stored, the storage prohibition of RCRA 3004(j) generally applies. This means that the decharacterized contaminated soil can only be stored for the purpose of accumulating necessary quantities of hazardous wastes to facilitate proper recovery, treatment, or disposal. See 40 CFR 268.50.

For decharacterized contaminated soil, the reporting and record keeping requirements of 40 CFR 268.9 apply. For example, if characteristic soil from an MGP cleanup is decharacterized at the site where it was generated, then sent off-site for further treatment to achieve LDR standards in a thermal desorption unit, the generator of the contaminated soil must complete a one-time notification and certification. The one-time notification and certification provides a description of the soil as initially generated, including applicable hazardous waste codes, treatability groups, and underlying hazardous constituents. It also provides information about the facility which will receive, and treat, the decharacterized soil. Thus, in this example the generator of the contaminated soil would identify the facility operating the thermal desorption unit. A copy of the one time notification and certification must be placed in the generator's files and sent to the appropriate EPA region or authorized state. These requirements create a tracking system so EPA and authorized states can determine that materials subject to the land disposal restrictions arrive at the right place and are appropriately treated prior to land disposal.

Furthermore, the dilution prohibition of 40 CFR 268.3 applies to the decharacterized contaminated soil until applicable LDR treatment standards are achieved. As you are aware, dilution is normally prohibited as a means of achieving the LDR treatment standards, including for characteristic (and decharacterized) wastes. See Chemical Waste Management v. EPA, 976 F. 2d 2, 15-19 (D.C. Cir. 1992).

ED_001593_00015893

We understand that often decharacterized contaminated soils from MGP cleanup sites are returned to the utility's power plant and mixed with coal or other combustibles prior to burning in a utility boiler. The Agency does not consider this process a form of impermissible dilution. Mixing MGP waste with coal or other combustibles results in a physical change to the waste stream that makes the waste more amenable to combustion (which, in addition to being a type of energy recovery, is a form of treatment that destroys or removes the hazardous constituents), and thus facilitates proper treatment.

In addition to mixing with coal or other combustibles, other types of mixing or treatment of decharacterized contaminated soil may be permissible prior to final treatment, provided that these processes produce chemical or physical changes and do not merely (1) dilute the hazardous constituents into a larger volume of waste so as to lower the constituent concentration or (2) release excessive amounts of hazardous constituents to the air. If mixing or other pre-treatment is necessary to facilitate proper treatment (e.g., destruction or removal, such as burning in a boiler) in meeting the treatment standards then dilution is permissible. See 51 FR 40592 (November 7, 1986) and 53 FR 30911 (August 16, 1988).

Note that, in some instances, burning decharacterized contaminated soil mixed with coal in a utility boiler may implicate the Bevill amendment. As you are aware, EPA's position is that wastes which are covered by the Bevill amendment are not subject to LDR requirements. 40 CFR 268.1(b); see also Horsehead Resource Development Co. v. Browner, 16 F. 3d 1246, 1260-61 (D.C. Cir. 1994) (upholding EPA's position). Consequently, if decharacterized contaminated soil is burned in utility boilers along with coal and the resulting combustion ash is within the scope of the Bevill amendment, LDR standards do not have to be met for that ash, nor would the decharacterized contaminated soils be considered to be a prohibited waste. In this case, the only reporting and recordkeeping requirement required is a one-time notice kept in the facility's records. See 40 CFR 268.7 (a)(7).

We appreciate your patience with the Agency in responding to your concerns. If you need further assistance, please contact Rita Chow of my staff at (703) 308-6158.

Sincerely,

Elizabeth A. Cotsworth
Acting Director
Office of Solid Waste

Enclosure (2)

ED_001593_00015893

SOLID WASTE

NOTE: Contents of this container have not yet been classified and must be managed as Hazardous Waste until classified. This container cannot be shipped until classification is complete.

Contents May Be Hazardous or Flammable

PENDING CLASSIFICATION

GENERATOR INFORMATION

SHIPPER: Valero Refining Co. - Benicia Refinery

ADDRESS: 3400 East Second Street, Benicia, CA 94510

CONTENTS:

ACCUMULATION DATE:

SOLID WASTE

ATTACHMENT 11

To: michael.monson@shell.com[michael.monson@shell.com]; Larry.Ramirez@dtsc.ca.gov[Larry.Ramirez@dtsc.ca.gov]; Melissa.Hagen@hsd.cccounty.us[Melissa.Hagen@hsd.cccounty.us]; Lin, Sharon[Lin.Sharon@epa.gov]
Cc: Natalie.Braden@shell.com[Natalie.Braden@shell.com]
From: Schofield, John
Sent: Thur 4/2/2015 4:00:20 PM
Subject: RE: Bundle Pad

Mike,

Thanks. Also there were solids also accumulated in the east most trench of the lower (east) pad. The documentation you provided did the cleanout include the east most trench?

regards,

John

****
John Schofield
U. S. Environmental Protection Agency
Region 9
Enforcement Division

Air, Waste and Toxics Branch, ENF-2-2
75 Hawthorne Street
San Francisco, CA 94105
(415) 972-3386
(415) 947-3530 (fax)
schofield.john@epa.gov
****

NOTE: This email, including any attachments, may contain material that is confidential, privileged and/or attorney work product and is for the sole use of the intended recipient. Any review, reliance or distribution by others or forwarding without expressed permission is strictly prohibited. If you are not the intended recipient, please contact the sender and delete all copies.

From: michael.monson@shell.com [mailto:michael.monson@shell.com]
Sent: Thursday, April 02, 2015 7:55 AM
To: Schofield, John; Larry.Ramirez@dtsc.ca.gov; Melissa.Hagen@hsd.cccounty.us; Lin, Sharon
Cc: Natalie.Braden@shell.com; michael.monson@shell.com

Subject: Bundle Pad

All,

I wanted to pass on information that the Maintenance Department has provided following Monday's closing meeting.

As you may recall, there are both an upper and lower section to the bundle cleaning area. After discussion with Maintenance, the upper section is not used for cleaning heat exchanger bundles, but rather for inspection of clean bundles. All heat exchanger bundle cleaning operations take place at the lower section of the bundle cleaning area.

I've also attached the most recently completed bundle pad cleaning form, which was completed March 19. Since the upper section is not used for bundle cleaning, those trenches are not cleaned (as they do not contain K050 hazardous waste). The following text is from the Bundle Cleaning Area procedure:

6.4 ENVIRONMENTAL REQUIRMENTS

To maintain compliance with MRC's hazardous waste and recycling program, the following requirements must be followed by anyone using the bundle pad facility.

1. Permission to use the bundle pad for cleaning must be obtained from Bundle Pad Coordinator (ext 3619) or authorized CMD Supervisor.

2. The gate to the area is to be locked when the area is not in use.

3. When cleaning equipment at the pad, do the following:

A) During exchanger pad cleaning, prevent any solids from leaving the pad area. Solids removed from the exchangers are to be rinsed into the sewer trench system.

B) Prevent truck or other vehicle tires from driving over exchanger solids. If necessary, rinse tires to prevent any solids from leaving pad area.

6.5 MONTHLY CLEANING AND INSPECTION (by PSC):

To be performed monthly:

A) Inspect sewer sump for any remaining solids. If solids are present, remove solids and deliver solids to Liquid Handling Site. Solids will be prepped for injection into Coker.

B) Inspect sewer sump for operating sump pump. If excess liquid level, arrange for maintenance. Report all pump change outs to Bundle Pad Coordinator.

C) Record inspection and cleaning on attached logsheet and send to Logistics Waste Coordinator.

Michael Monson

Staff Engineer - Environmental

Martinez Refinery, 3485 Pacheco Blvd, Martinez CA 94553

Phone: 925-313-5516

Email: michael.monson@shell.com

Internet: http://www.shelloilproductsus.com/

VALERO
Benicia Refinery • Valero Refining Company - California
3400 East Second Street • Benicia, California 94510-1097 • Telephone (707) 745-7011 • Facsimile (707) 745-7339

HAND DELIVERED

September 2, 2015

Mr. Joel Jones
Assistant Director, Enforcement Division
Environmental Protection Agency, Region IX
75 Hawthorne Street
San Francisco, CA 94105

Re: Response to Notice of Intent to File a Complaint Pursuant to RCRA and EPCRA

Dear Mr. Jones:

This letter timely responds to the Notice of Intent to File a Complaint Pursuant to RCRA and EPCRA ("NOI") issued to by the U.S. Environmental Protection Agency on July 30, 2015 to Valero Refining Company – California. The NOI is based on a multi-media compliance inspection that was conducted at Valero's Refinery in Benicia, California in May 2014. Representatives of the National Enforcement Investigations Center ("NEIC"), EPA Region 9, and the California Department of Toxic Substances Control ("DTSC") participated in the inspection.

We received a copy of the final NEIC Investigation Report and supporting documentation on August 5, 2015, and were advised that our response to the Notice is due no later than 28 days thereafter, i.e., by September 2, 2015. Further, please note that Elizabeth Bourbon, Senior Managing Counsel at Valero, has spoken with Rebecca Sugerman, Office of Regional Counsel, Region 9, to confirm Valero's interest in meeting with EPA to discuss the issues raised in the Report, with the goal of reaching an acceptable settlement of the alleged violations. A meeting is currently scheduled for September 24, 2015 at EPA's office in San Francisco. It is our understanding that EPA will defer the filing of any administrative complaint until we have had an opportunity to conduct these settlement discussions and gauge the likelihood for their successful outcome.

The alleged violations contained in the NOI are set forth below, followed by our responses.

1. Treatment and Storage of Hazardous Waste without a Permit (operating an unlined stormwater surface impoundment as a hazardous waste management unit without obtaining a

RCRA permit; storing and treating hazardous waste on the heat exchanger bundle cleaning pad without a RCRA permit), 22 CCR § 66270.1(c) [see also 40 CFR § 270.1(c)].

Response to #1A. Valero acknowledges that routine discharges of wastewater exceeding the Toxicity Characteristic Leaching Procedure into surface impoundments that have not been permitted under RCRA is a violation of law. However, for the reasons discussed below, Valero does not believe that the discharges in question were subject to the permitting requirement.

The NEIC Report identifies 14 days over a three-year period (2011-2013) on which the concentration of benzene in wastewater entering the Stormwater Retention Pond at the Wastewater Treatment Plant (WWTP) exceeded 0.5 mg/L. Valero has reviewed its records and confirmed that these discharges were directly attributable to six significant storm events that occurred in the Bay Area during that time period and that produced wet weather flows at the Refinery exceeding the rate at which water can be pumped to the WWTP for treatment. As explained below, these wet weather flows — which resulted in "self-diversions" to the stormwater retention pond — coincided with discrete spills and other operational incidents that occurred within the refinery and that are believed to be the cause of the benzene detected at the inlet to the pond.

Description of Refinery Sewer Systems

There are two separate process sewer systems at the Benicia Refinery. One of these collects and routes oily process wastewaters to the WWTP for treatment (the Oily Process Sewer). The other system collects and routes predominantly non-oily process wastewaters and stormwater that falls directly on process areas of the refinery to the WWTP for treatment (the API Sewer). The Oily Process Sewer is entirely segregated from the API Sewer, and was purposefully designed in this way to ensure that oily process wastewaters produced at the refinery are managed separately and do not have an opportunity to combine with stormwater during rain events and end up in the refinery's stormwater retention ponds. Wastewaters that are managed in the API Sewer, while not entirely free of hydrocarbons, are essentially clean streams that can be safely co-managed with stormwater flows during wet weather. A list of the wastewater streams that are routinely managed in the API Sewer is provided in Attachment 1.

While it is possible for streams managed in the API Sewer to contain some process materials as a result of upset conditions in the refinery (e.g., accidental spills, equipment malfunctions or breakdowns), the wastewater in the API Sewer does not typically contain visible oils, or elevated levels of benzene or other volatile organics. In this regard, the NEIC Report notes that, on the day of the inspection, the water in the stormwater retention ponds appeared clear, and oil was not observed in the water or on the banks of the ponds. NEIC Report, Item #1, at p. 19. Quarterly samples of wastewater collected at the Diversion Tank inlet (see below) in accordance with the Benzene Waste Operations NESHAPS (BWON) confirm that benzene concentrations in the wastewater conveyed in the API Sewer are extremely low and typically two to three orders of magnitude below the TCLP. See BWON Quarterly Sampling Results (2005-2015), provided in Attachment 2. Valero also recently collected three samples of accumulated sediment from the 72-inch line (see description in *Stormwater Management System* below) and analyzed them for

benzene. Benzene was not detected in any of the samples, at a reporting limit of 0.005 mg/kg. A copy of the analytical report is provided in Attachment 3.

The wastewater in the API Sewer and the Oily Process Sewer is conveyed by separate lines that run from the refinery down to the Diversion/Equalization Tanks, which are located in the Lower Tank Farm. These sewer lines discharge into the Diversion/Equalization Tanks at different points on the tanks, and the wastewaters commingle once inside the tanks. The combined oily and non-oily waters are equalized in these two tanks before being pumped into the WWTP. As described below, there is also a self-diversion line connected to the API Sewer line upstream of the Equalization/Diversion Tanks that conveys water in the API Sewer through a 72-inch line to the stormwater retention pond under certain high flow conditions. There is no self-diversion line from the Oily Process Sewer. The maximum pumpout rate from the tanks to the WWTP is approximately 1,780 gpm. A diagram of the Diversion/Equalization Tanks showing the flows into and out of the tanks is provided in Attachment 4. As can be seen from the diagram, and as discussed below, process wastewater that enters the Diversion/Equalization Tanks, by design, can only be discharged to the WWTP.

Stormwater Management System

The refinery does not have a fully segregated stormwater sewer system, and stormwater that falls on process areas of the plant has the potential to commingle with non-oily process wastewaters that are collected by the API Sewer. During significant wet weather events, the volume of water entering the API Sewer and flowing toward the Diversion/Equalization Tanks increases significantly. Once the tanks are full, the incoming water backs up in the inlet line and causes the API Sewer to "self-divert" into a 72-inch line that leads to the Stormwater Retention Pond. This "self-diversion" is depicted on the diagram in Attachment 4 by the green 72-inch line labeled "To Pond." As can be seen on the diagram, there is no self-diversion line off the Oily Process Sewer.

There are no valves or other mechanical barriers to the overflow from the API Sewer line into the 72-inch line, and the hydraulic pressure created by the water that backs up in the line leading to the Diversion/Equalization Tanks causes the water to be redirected and to flow by gravity into a concrete-lined spillway (or canal) that leads into the Stormwater Retention Pond. There is no way to prevent this self-diversion from taking place, and no place for the water to go except into the Retention Pond. If the system were not designed in this manner, the API Sewer would be overwhelmed, causing serious flooding in the refinery whenever the flow rate through the API Sewer exceeded the pumpout rate from the Diversion/Equalization Tanks to the WWTP. In severe storms where the capacity of the Retention Pond is approached, stormwater can be pumped from that pond to the one or more of three retention ponds located in the Crude Field, in order to prevent flooding.

Significantly, the refinery has no record of any self-diversions into the WWTP Retention Pond during dry weather. As discussed below, the self-diversions are a wet weather phenomenon, and can occur even during relatively modest storms. It should be emphasized that there is no way

that wastewater in the Oily Process Sewer — which would be expected to contain greater concentrations of benzene — can be diverted into the Stormwater Retention Pond.

The stormwater system was originally designed and engineered so as to avoid catastrophic flooding of the WWTP and uncontrolled discharges of untreated refinery wastewater to Sulfur Springs Creek and Carquinez Strait. By containing these high volume wet weather flows within the Refinery's system of stormwater impoundments for brief periods of time while the WWTP "catches up," Valero is able to avoid any potential for water quality impairment or other environmental harm that might be associated with uncontrolled discharges of untreated wastewater during these severe storm events.

Valero implements numerous operational procedures to minimize the amount of benzene or other process residuals that might become entrained in stormwater when these types of system overflows occur, but it has no way of knowing in advance whether any given volume of stormwater may contain benzene at a concentration exceeding 0.5 mg/L. None of the streams that routinely flow through the API Sewer contain hazardous levels of benzene, but Valero acknowledges that benzene has the potential to enter the system. Valero monitors all diversions into the Retention Pond on each day they occur, but it can be very difficult after the fact to determine the source or cause of benzene exceedances that were detected.

In reviewing the conditions associated with the six storm events associated with the self-diversions, it is apparent that the flow rate in the API Sewer exceeded the capacity of the Equalization Tanks and the WWTP to process the water, thus resulting in the diversions to the Retention Pond on the 14 days in question. The rainfall on these days ranged from 0.68 inches (approximately 1.2 million gallons) to 1.59 inches (approximately 2.7 million gallons). While some portion of the water falling on the refinery would have been retained inside tank berms for some period of time, a significant quantity of stormwater entered the API Sewer and flowed towards the WWTP. In some cases, the storms were preceded by other large storms, occurring back-to-back over several days. In other cases, the rain fell in intense bursts, rapidly overwhelming the Diversion/Equalization Tanks and causing water to divert into the Retention Pond. For example, Valero calculated that the rate of flow into the Retention Pond during the peak intensity of the storm that occurred on March 24-25, 2011, was almost 10,000 gpm, more than five times the maximum pumpout rate of the Diversion/Equalization Tanks. On other days the rain fell more steadily over longer periods of time, but still accumulated at a faster rate than could be processed by the WWTP.

Emergency Containment Systems

Because the flows through the API Sewer do not typically contain visible hydrocarbons or volatile organics, Valero has historically attributed benzene exceedances that have been detected during these self-diversions to spills or releases of fuels or other benzene-containing raw materials or intermediates that somehow entered the API Sewer and were conveyed to the pond during large rain events. Based on the concentration of benzene in the samples collected at the Diversion Canal Spillway (the inlet to the pond), Valero is able to calculate whether the reportable quantity for benzene (10 pounds) was exceeded and if so, the incident is reported to

the National Response Center and the California Emergency Management Agency. Containment of these spills, through retention of the stormwater in the Retention Pond, avoids uncontrolled discharges of untreated wastewater to Sulphur Springs Creek and Carquinez Strait.

Under 40 CFR § 264.1(g)(8)(i)(B), actions taken to contain an imminent and substantial threat of a discharge of hazardous waste, where consistent with preparedness and prevention requirements and contingency planning and emergency response procedures, are exempt from the requirement to obtain a permit under RCRA. An identical provision is contained in the state hazardous waste regulations at 22 CCR § 66264.1(g)(8)(A)2. Valero believes that the self-diversions into the stormwater retention pond(s) fall squarely within this exemption, as explained below.

Due Diligence and Investigation of Causes of Benzene Exceedances

Valero has reviewed its internal records and has been able to correlate benzene exceedances detected in the wet weather self-diversions to the Stormwater Retention Pond with upset conditions that had occurred in the refinery. Where upset conditions result in significant discharges of hydrocarbons into the API Sewer, it can take several months for all residual hydrocarbons to be removed from the system, even where the bulk of the oil is removed during initial cleanup efforts. The oil becomes trapped inside junction boxes (J-boxes) in the water conveyance system. The J-boxes have underflow weirs and the only way hydrocarbon can move downstream is through mixing, turbulence and dissolution in the water in the J-box over time. This accounts for the variability that is seen in the sampling results associated with the wet weather diversions.

Brief descriptions of the operational spills/events that likely led to increased benzene-containing hydrocarbon to the API Sewer are provided below.

February 23-28, March 6, 18, 24-25, 2011. On December 2, 2010, an unexpected loss of feed to the FCCU occurred, resulting in the eventual emergency shutdown of the unit. During this event, the refinery experienced a migration of benzene-containing oily solids from the FCCU pumparound system into ancillary pipelines and equipment. A significant amount of material entered the sewer system when the lines were opened and cleared. While most of the free product was recovered from sumps and other locations within the sewer, a sheen was observed on the Stormwater Retention Pond, indicating that hydrocarbon had moved through the system during subsequent heavy rains and was likely responsible for the elevated benzene detected in the water entering the pond. Based on the quantity of material that was released, the emergency shutdown of the FCCU is believed to have impacted stormwater quality through the end of March 2011.

March 27, 2012. On March 14, 2012, there was a Blending Pad Sump overflow to the API Sewer and to grade. Based on the current piping configuration within the refinery, overflows from this sump are carried to a point just upstream of the self-diversion line, allowing residual hydrocarbons to be carried into the pond under wet weather conditions. Plans are underway to relocate the lift station discharge line to a point downstream of the self-diversion take-off

location, forcing this water into the Diversion/Equalization tanks rather than down the 72-inch line.

September 21, 2013. The exceedance detected on this date is believed to be attributable to another shutdown of the FCCU, as well as the Coker unit, as a result of a gas turbine trip. During FCCU startups and shutdowns, C5s are typically diverted to the flare drum where vapors and any liquid hydrocarbons are separated and both are recovered either by flare gas recovery or as slop oil. As a result of the investigation for benzene in stormwater, it was determined that some of the C5 hydrocarbons routed to the flare during startup may have condensed in the flare drum and flowed to the API sewer via the water seal. It is likely this same carryover phenomenon occurred in early 2011 and may have contributed to the exceedance of benzene in diverted stormwater at that time. Since this event in September 2013, Valero has developed a flare seal drum monitoring procedure to prevent hydrocarbon carryover from the flare seal drums to the process sewer. Subsequent events in 2014 that resulted in shutdown/startup of the FCCU, and that occurred after implementation of this new procedure, did not result in elevated benzene concentrations at the Diversion Tanks.

December 6-7, 2013. The benzene exceedances detected on these dates are believed to be attributable to residual C5s from the September 21, 2013 incident that were still trapped in the sewer system and/or from a Blending Pad Sump overflow that occurred on September 26, 2013.

Other Considerations and Mitigating Factors

If EPA disagrees with Valero's interpretation of the regulations and maintains that the permit exemption for treatment and containment of emergency discharges or threatened discharges of hazardous waste is not applicable in the circumstances, Valero does not wish to contest EPA's interpretation of the regulations if a reasonable resolution of this issue can be reached. Valero is in the process of evaluating further modifications that it can make to its operating procedures and protocols to ensure that episodic wet weather flows to the stormwater impoundments during significant storm events do not contain benzene in excess of 0.5 mg/L. Valero is committed to identifying these sources and eliminating their discharge into the sewer system. Had we understood that EPA would consider emergency containment measures of this nature to subject the stormwater impoundments to RCRA permitting, Valero would have implemented necessary changes in operating procedures many years ago in an effort to eliminate the potential for these sporadic and infrequent benzene discharges to enter the stormwater retention ponds.

However, continued operation of the stormwater impoundments is essential to the safe and environmentally prudent operation of the Refinery. Closure of the ponds, whether permanently or for the lengthy period of time that would be necessary to comply with the Minimum Technology Requirements and obtain a Hazardous Waste Facility Permit from DTSC, is not a viable option and the cost of such corrective action cannot be justified from an environmental perspective. Temporary or permanent closure of the ponds would pose an ongoing significant risk of major flooding within the Refinery, which threat is made more imminent by reports of a major El Nino weather pattern that is predicted for this coming wet season.

Valero has also sampled the sediments in the stormwater impoundments in connection with an assessment of the impoundments required by the San Francisco Bay Regional Water Quality Control Board. The sediments do not exhibit hazardous characteristics, are not listed hazardous wastes,[1] and do not contain any hazardous constituents at concentrations that could potentially pose a concern from a groundwater quality perspective. Historical pond sediment data from the 2015 groundwater report for organics, along with a labeled photograph showing the location of the ponds, are provided in Attachment 5. The retention pond had a maximum total benzene concentration of 2.6 mg/kg, which would equate to a maximum TCLP value of 0.13 mg/l, below hazardous waste criteria. All other ponds were ND for benzene. Based on these data, the Regional Board concurred that pond sediment sampling is no longer required. A copy of the Regional Board's letter is provided in Attachment 6.

The NEIC report states that Valero removed sediments from the stormwater retention pond last year and classified the sediments for disposal as F037. This is incorrect. In fact, the sediment was removed from the inlet channel to the impoundment and was conservatively classified as F037 based on the possibility that historically deposited primary sludge might have been present in this line. Other sediments that were described in the NEIC report as having elevated benzene concentrations were not stormwater pond sediments.

Conclusion

For all of the reasons set forth above, Valero does not believe that the Stormwater Retention Pond is subject to RCRA permitting. Numerous actions have been taken over the past several years to minimize the potential for episodic, accidental releases of benzene-containing hydrocarbons to enter the API Sewer, where they are susceptible to self-diversion into the stormwater retention pond during significant wet weather events and qualify for exemption under 40 CFR § 264.1(g)(8)(i)(B) and 22 CCR § 66264.1(g)(8)(A)2.

Response #1B: Valero disputes this alleged violation, and maintains that its operation of the heat exchanger bundle cleaning pad is exempt from hazardous waste permitting requirements.

This alleged violation is nearly identical to a violation that was alleged by DTSC in 2010. At the time, DTSC claimed that the Refinery violated Health & Safety Code, Section 25201(a) (the hazardous waste permit requirement) by storing RCRA hazardous waste without a permit or variance, by allowing heat exchanger bundle cleaning sludge (K050) to remain in the heat exchanger bundle cleaning pad trough and sump. Valero disputed this violation on the grounds that the heat exchanger bundle cleaning pad is part of the refinery's oil recovery system and as such is exempt from the requirements of the Hazardous Waste Control Law.

---

[1] Wet weather flows of oily refinery wastewaters and stormwater do not give rise to primary sludge.

ED_001593_00015922

The explanation that was provided to DTSC is reiterated below and is equally applicable to the violation alleged in EPA's NOI. DTSC concurred with Valero's explanation and subsequently withdrew the violation in 2011. DTSC did not provide Valero with written confirmation of its decision not to pursue enforcement, but no penalties were ever assessed and DTSC did not require Valero to modify its operational practices at the pad or to obtain a permit. A copy of Valero's email to DTSC legal counsel and enforcement staff confirming withdrawal of the violation relating to the heat exchanger bundle cleaning pad is provided in Attachment 7.

The heat exchanger bundle cleaning pad, including the trough and sump, is an integral part of the Refinery's oil recovery system and serves as the point of entry and initial separation stage for secondary oil-bearing materials that are not hard-piped directly to the oil recovery system. In addition to heat exchanger bundles, other types of oily process equipment (e.g., vacuum trucks, pumps, strainers, etc.) are routinely dismantled, cleaned and/or washed out on the pad. The oily solids and water generated by these operations are washed down the trough and into the sump where initial oily water/solids separation takes place. The outlet to the sump is blocked by a valve, which remains closed to allow time for the solids to settle to the bottom of the sump. At the end of the cleaning operation, the valve is opened, allowing the oily water and finer oily sediments to flow to the Wastewater Treatment Plant (which is located immediately downstream of the sump) where they undergo further oil/water/solids separation and oil recovery. The large solids that have settled to the bottom sump are removed by mechanical means and placed in the dewatering bin for subsequent disposal as K050 or F037, depending on the type of equipment being cleaned. Photographs of the bundle cleaning pad, the operating instructions for the pad and a schematic showing how the pad is integrated with the remainder of the refinery's oil recovery system are provided in Attachment 8. Oil may be directly sent to slop oil tanks or combined with the oily sludge generated in the downstream oil recovery equipment that is pumped directly from the oil recovery system to the Coker as feedstock. Approximately 9,000-12,000 barrels (378,000-504,000 gallons) of oily sludge is pumped to the Coker per month. The oil recovery process is a routine, consistent, and significant aspect of the ongoing manufacturing process.

Under RCRA, oil-bearing hazardous secondary materials generated at petroleum refineries are excluded from classification as solid waste under 40 CFR § 261.4(a)(12)(i) where they are processed to remove recoverable oil and the recovered oil (whether in the form of liquid or sludge) is subsequently returned to the refinery for processing as feed for distillation columns or as coker feedstock. While California has not adopted this specific federal exclusion, there are other provisions of California law that function in an equivalent manner and exempt both the pad and the oily materials managed on the pad from regulation under the Hazardous Waste Control Law.

Under Health & Safety Code section 25144(c), "units, including associated piping, that are part of a system used for the recovery of oil from oil-bearing materials, and the associated storage of oil-bearing materials and recovered oil," are exempt from regulation under the Hazardous Waste Control Law so long as the conditions specified in section 25144(c)(1)-(6) are satisfied. This exclusion is not dependent on the application of the federal wastewater treatment unit exemption

(which is not applicable in California in any event except with respect to wastes that are hazardous solely because they contain more than 0.5 mg/L benzene), nor is it dependent on the express inclusion of the pad as a component of the refinery's NPDES-permitted wastewater treatment system.[2] The exemption in HSC section 25144(c) is subject to a number of conditions, as specified in the statute, each of which is met in the circumstances. Heat exchanger bundle cleaning sludge (K050) and other oily wastewaters and sludges generated at the refinery contain economically recoverable amounts of oil and qualify as oil-bearing materials that may be handled in exempt oil recovery systems.

The collection/conveyance system at the bundle pad represents the first step in the refinery's oil recovery process and was designed specifically to manage oily wastes that have a high solids content. The bundle cleaning pad provides a safe and effective means of separating out large solids are not suitable for reinsertion into the refining process, allowing oily water and finer oily solids that are suitable for reinsertion into the refining process (oily sludges) to move along to subsequent stages of the oil recovery process. Liquid oil is routed to slop oil tanks for reinsertion into the refining process and oily sludges are pumped directly to the Coker as feedstock. These large solids are disposed of off-site as a RCRA hazardous waste.

The NEIC Report states "[t]hese secondary materials are not recycled; they are shipped off-site for disposal as hazardous wastes." See NEIC Report, p. 21, Item 3. The Report goes on to state that "the exemption under 40 CFR § 261.4(a)(12)(i) applies to hazardous secondary materials that are reinserted into the petroleum refining process. The waste[s] handled on the heat exchanger bundle cleaning pad are treated before they are shipped off-site for disposal as hazardous waste and are not inserted back in to the petroleum refinery process." *Id.*, at p. 23. These statements are incomplete, misleading and inaccurate.

Both the federal and state oil recovery exemptions contemplate that oil recovery processes may generate residuals that are not suitable for return to the process and that will be disposed of off-site. See 40 CFR § 261.4(a)(12)(i) (residuals generated from the processing or recycling of oil-bearing hazardous secondary materials classified as F037); HSC section 25144(c)(5) (any residual materials removed from an exempt oil recovery unit must be managed in accordance with all other applicable laws). The fact that residuals (the large solids that settle to the bottom of the sump) are removed from the system for disposal does <u>not</u> mean that the secondary oil-

---

[2] There is a separate provision of RCRA that exempt mixtures of wastewater and certain listed wastes (including K050) generated during refinery cleaning operations, where (i) the listed wastes are discharged to the refinery's oil recovery sewer before primary oil/water/solids separation, and (ii) the wastewater is ultimately discharged under an NPDES permit.. See 40 CFR § 261.3(a)(2)(iv)(C). An identical provision is found in 22 CCR § 66261.3(a)(2)(F)(3) which specifically excludes from the definition of hazardous waste, mixtures of K050 and wastewaters subject to regulation under the Clean Water Act. These state and federal exemptions operate to avoid classification of refinery wastewater as a listed hazardous waste by virtue of the mixture rule.

bearing materials that were placed on the pad in the first place are ineligible for exclusion or exemption under 40 CFR § 261.4(a)(12)(i) or HSC § 25144(c).

EPA has made it clear that the exclusion in 40 CFR § 261.4(a)(12(i) "applies to the oil-bearing hazardous secondary materials from the point they are generated, even though some preprocessing may be required before insertion, and even if this preprocessing generates residuals that are not inserted (and thus not excluded under this provision)." See Attachment 9, Letter from Robert Springer, Director, EPA Office of Solid Waste, to Mr. Rob Short, Tetra Process Services, L.C., undated (RO 14677) (emphasis added). There can be no doubt that oil-bearing hazardous secondary materials such as those handled on the bundle cleaning pad are not "solid wastes" under RCRA while they are undergoing any stage of oil recovery so long as the recovered oil (whether in the form of liquid or sludge) is returned to the refining process, as is in fact the case here. The exclusion is not destroyed because a component of the original secondary material cannot be recycled back to the process and must be disposed of. The fact that EPA promulgated a rule which classifies residuals from the oil recovery process as F037 proves this point. The NEIC investigators apparently are of the opinion that 100% of the secondary material must be reinserted into the refining process in order for the exclusion to apply. That interpretation is not supported by the language of the regulation or EPA guidance.

The Report also states that, "as stated in California's DTSC inspection report [link omitted], 40 CFR § 261.4(a)(12)(i) has not been adopted by the state of California; therefore this provision does not apply at the facility." NEIC Report, at p. 23, Item 3. While it is true that California has not adopted the federal exclusion, NEIC completely overlooks the existence of the state oil-bearing material exemption in HSC section 25144(c) which is functionally equivalent to the federal exclusion in 40 CFR § 261.4(a)(12)(i). It was on the basis of this state exclusion that DTSC withdrew the 2010 violation relating to the heat exchanger bundle cleaning pad.

Based on the foregoing, Valero believes the current management practices at the heat exchanger bundle cleaning pad comply with all applicable hazardous waste regulations and that this alleged violation cannot be substantiated. Valero has implemented strict operating requirements for the cleaning pad, including removal of all residuals on the pad surface after each cleaning job or at the end of each shift. The pad provides adequate containment of all materials, and other operating requirements are designed to avoid overspray and trackout and ensure rapid cleanup of any inadvertent spills. A copy of the Operating Requirements is provided in Attachment 8.

To the extent that EPA has any concern about the integrity of the pad itself and its ability to adequately contain the oil-bearing materials managed on the pad, EPA has indicated that the adequacy of containment structures for purposes of evaluating eligibility for recycling exclusions and exemptions should be left to authorized states. See, e.g., October 29, 1992 letter from Sylvia Lowrance (RO 11705) (the determination as to whether a specific tank, container, containment building, or other unit meets State design criteria for 'no land disposal' is site specific, and may vary from place to place. While the Agency clearly intends for the units to contain the wastes adequately, the Agency leaves the creation of such site specific criteria to local authorities); August 21, 1998 letter from Elizabeth Cotsworth (Faxback 14283) (determinations about containment units will likely be made predominantly by authorized states and that due to site-

and waste-specific variability, containment units will have to accommodate the variety of conditions that may be presented). In this case, DTSC has endorsed Valero's use of the heat exchanger bundle cleaning pad in accordance with the Refinery's Operating Requirements. Copies of the EPA guidance letters are provided in Attachment10.

2. Failure to Make a Hazardous Waste Determination, 22 CCR § 66262.11 [see also 40 CFR § 262.11].

Response: This alleged violation is based on the possibility that stormwater containing benzene in excess of 0.5 mg/L was pumped from the WWTP Stormwater Retention Pond into another stormwater retention pond located in the crude tank area (Crude Field Retention Pond C). The NEIC Report notes that on March 6, 2011, the inlet concentration of benzene at the Stormwater Retention Pond was measured at 2.89 mg/L, and that water was pumped from that pond into Pond C on that same day. EPA asserts that Valero should have sampled the water entering the crude field pond to determine if it also exceeded 0.5 mg/L benzene and, if so, to presumably cease the discharge.

Valero's response to this violation is the same as set forth under Allegation #1A. On March 6, 2011, a very large storm produced a total of 0.89 inches of rain, exceeding the allowable capacity of the stormwater retention pond at the WWTP. As noted in the NEIC Report, Valero is required by its Waste Discharge Requirements issued by the San Francisco Bay Regional Water Quality Control Board to pump water from this pond to one or more crude field retention ponds when the water reaches a depth of three (3) feet in the WWTP stormwater retention pond. Valero had no other place to pump the water that was rapidly accumulating in the WWTP retention pond, and had it not pumped the water to Pond C, the wastewater treatment plant would have flooded and the water would have overflowed to Sulfur Springs Creek and the Bay.

Even if Valero had collected a sample of the discharge into Pond C and determined that the benzene concentration exceeded 0.5 mg/L, we could not have diverted the flow. Valero maintains that the discharge into Pond C falls within the scope of 40 CFR § 264.1(g)(8)(i)(B), as a containment activity during an immediate response to an imminent and substantial threat of a discharge of hazardous waste. Under the circumstances, collecting a sample of the water entering Pond C would have been an act of futility and, in any event, was unnecessary in light of the permit exemption referenced above.

3. Failure to Minimize the Possibility of Unplanned Release of Hazardous Waste or Hazardous Waste Constituents to Air, Soil or Surface Water, 22 CCR § 66265.31 as referenced by § 66262.34(a)(4) [see also 40 CFR §265.31, as referenced by § 262.34(a)(4)].

Response: This alleged violation is based on an accidental release of oily sludge that, under normal operating conditions, is pumped directly from the wastewater treatment system to the Refinery's Coker, in accordance with 40 CFR § 261.4(a)(12)(i) and HSC section 25144(c). During the time period in question, the Coker was down for maintenance, and Valero had hired a third-party contractor to transport the oily sludges by vacuum truck from the wastewater treatment plant to an area in the Refinery where Baker Tanks were being used to temporarily

store the sludge until the Coker was brought back on line. Unfortunately, the contractor accidentally connected the vacuum truck to a line that was not connected to a Baker Tank, resulting to the discharge of sludge to the ground.

Upon discovery of the incident (which occurred on March 28, 2014), Valero immediately excavated the affected soil and placed it in roll-off bins with labels indicating that the soil was "Pending Classification." This label states that the "contents of this container have not yet been classified and must be managed as Hazardous Waste until classified." See Attachment 11. Because the oil-bearing material was excluded from the definition of "solid waste" (under RCRA) and was being managed in accordance with HSC section 25144(c) at the time it was accidentally released, Valero believed in good faith that the point of generation for the waste that was being managed in the bins was the excavation of the impacted soil. Analytical results subsequently confirmed that the soil did not exhibit any hazardous waste characteristics, and the "Pending Classification" labels on the bins were changed to Nonhazardous Waste labels.

On the day of the NEIC inspection (May 14, 2014), the inspectors observed staining on the ground at the base of one of the Baker Tank. Valero described the incident that had occurred in March and explained that the impacted soil had been cleaned up, analyzed and determined to be nonhazardous. The small amount of stained soil at the base of the Baker Tank could not be accessed for removal until the Baker Tanks themselves were removed. In response to the inspectors' assertion that the solid waste exclusion is not applicable to oil-bearing material that has been spilled onto the ground, and that the contaminated soil should be classified as F037 under the "contained in" rule, Valero immediately relabeled the bins with appropriate hazardous waste labels. The bins were subsequently sent to Clean Harbors' facility in Buttonwillow, under a hazardous waste manifest and with a Land Disposal Restriction notice indicating that the soil met the land disposal treatment standards for F037 without further treatment.

Valero has reviewed the regulations and other agency guidance regarding the classification of environmental media that is contaminated with oil-bearing hazardous secondary materials that are accidentally released to the environment and that are not able to be returned to the process for recycling. Valero acknowledges that its prior understanding of this issue was incomplete and agrees with EPA that the impacted soil should have been classified as F037. Because this classification error was discovered before any soil was removed from the Refinery and within the 90-day accumulation period, the only violation that occurred was the failure to properly label the bins for a period of 22 days (the number of days between the day the bins were relabeled from "Pending Classification" to "Nonhazardous Waste" and the date of the inspection). Throughout this period (including while the bins were labeled as nonhazardous waste), <u>in all other respects</u>, the bins were managed in accordance with regulations applicable to accumulation of hazardous waste, including weekly inspections. This labeling error was the result of a good faith misunderstanding of the applicable regulations, and did not result in any actual or threatened harm to the environment. Further, Valero confirmed with Clean Harbors that, because the soil met the treatment standards for F037 without need for treatment, the soil would have been disposed of in the same cell even if it had been accepted at the landfill as a nonhazardous waste.

Valero believes that other residual spillage described in the NEIC Report (see Item 4, at pp. 23-24) was *de minimis* in nature and does not fairly support the claim that Valero failed to operate the facility in a manner that minimized the possibility of a fire, explosion, or release of hazardous waste or hazardous waste constituents to air, soil or surface water. Valero has established Standard Operating Procedures that require the prompt cleanup of all spills of hazardous waste and hazardous materials by appropriately trained personnel, and all employees are required to comply with these procedures.

4. Failure to Submit Timely, Complete and Correct Toxic Chemical Release Inventory Forms Pursuant to EPCRA Section 313 for:

    - Benzene in reporting years ("RY") 2010, 2011 and 2012;
    - Ethylbenzene in RY2012;
    - Ethylene in RY2010 and RY2011;
    - Toluene in RY2010, RY2011 and RY2012; and
    - Xylene (mixed isomers) in RY2010, RY2011 and RY2012.

Response to #4. Reading the NOI together with the NEIC investigation report, Valero believes this allegation addresses two distinct issues identified as "Areas of Noncompliance" in the inspection report, and therefore our response below addresses each of these in turn.

The NEIC finding identified as "AON 2" states that Valero reported fugitive air release values that do not correspond with values that NEIC calculated based on using Valero's calculation methodology and background information, as summarized in Table 3 of the NEIC inspection report. These observations relate to reported emissions of benzene, ethylene, toluene, and xylene in RY 2010 and 2011. After researching this allegation, Valero agrees that fugitive emissions of benzene, ethylene, toluene, and xylene were over-reported for RY2010. These erroneous values are attributable to a transitional issue associated with conversion to a new electronic emissions estimation and reporting system known as VALAIR (IHS Essential Air Module). Based on Valero's review of the RY2010 data, it appears that monthly 2010 fugitives data was not properly loaded into the VALAIR system. Rather than producing error messages or calculating fugitive emissions of these constituents based on null values, VALAIR automatically used the last correct monthly data set entered for 2009 as the basis of calculating 2010 estimates. This resulted in over-reporting of 2010 fugitive emissions. Valero has recalculated fugitives emissions using 2010 monthly data and is prepared to resubmit RY2010 Form Rs following discussion with EPA. Please note, however, that Valero's revised estimates using 2010 data do not match the NEIC-calculated values because NEIC used a fugitive speciation profile established in 2012, which would not have been available in RY2010 when calculating RY2010 emissions.

As for RY2011 fugitive emissions of benzene, ethylene, toluene, and xylene, Valero has reexamined the data inputs, methodology, and calculated results, and has confirmed that our reported values are correct. After studying the discrepancy between our results and those obtained by NEIC, we believe the difference may result from NEIC's application of a fugitive speciation profile established in 2012, which would not have been available in RY2011 for calculating 2011 emissions. However, we do not have NEIC's detailed calculations available to confirm. If EPA is willing to provide those before the meeting, we would be happy to compare them with our own to determine whether this is why our calculated results do not agree.

The discussion of AON #2 in the NEIC inspection report also asserts that Valero incorrectly calculated fugitive cooling tower emissions of benzene, ethylbenzene, toluene, and xylene for RY2012. Valero conducted a detailed review of emissions estimates for the cooling tower for RY2012 and found our reported values to be correct, true and complete. Again, we think it may be helpful for our staff to compare their detailed calculations to determine the cause of the discrepancy between our numbers.

Thank you very much for your consideration of these issues. We look forward to meeting with your staff on September 24.

Very truly yours,

Christopher W. Howe

Christopher W. Howe
HSE & Governmental Affairs
Director

Attachments 1-11

To: Lin, Sharon[Lin.Sharon@epa.gov]
Cc: Schofield, John[Schofield.John@epa.gov]
From: Natalie.Braden@shell.com
Sent: Fri 7/10/2015 10:54:44 PM
Subject: EPA Request for Information - Shell Oil Products US (CAD009164021)

Ms. Lin,

We have received in this office on June 29, 2015 the United States Environmental Protection Agency, Region 9's letter seeking additional information following the March 23, 2015 through March 30, 2015 compliance evaluation inspection. I understand you are looking for a response within thirty (30) calendar days from the day we received the letter which, based on my calculation, would be July 29, 2015. I'm currently reviewing the information request with my staff but given the amount of information requested and the summer holiday schedule I will need additional time in which to provide all of the requested information. I should be in a position next week to know how much of an extension I will need and will follow-up with you on such a request in writing.

Regards,

Natalie Braden
Environmental Affairs Manager - Shell Martinez Refinery
Shell Martinez Refinery, 3485 Pacheco Blvd, Martinez CA 94553
Tel: +1 925-313-3705 **Email:** natalie.braden@shell.com

To: Lin, Sharon[Lin.Sharon@epa.gov]; Schofield, John[Schofield.John@epa.gov]
From: DeMarco, Daniel@DTSC
Sent: Tue 10/10/2017 3:44:05 PM
Subject: FW: Document Request
PSC - DTSC Response Letter 10-07-17.pdf

This was PSC's response. I haven't heard anything from Andeavor.

From: Teel, Brandon (PSC) [mailto:Brandon.Teel@pscnow.com]
Sent: Saturday, October 07, 2017 6:32 PM
To: Kodysz, Kenneth (PSC) <Kenneth.Kodysz@pscnow.com>; DeMarco, Daniel@DTSC <Daniel.DeMarco@dtsc.ca.gov>; Moreau, David (PSC) <David.Moreau@pscnow.com>; Callihan, Charles (PSC) <Charles.Callihan@pscnow.com>; DeWitt, Matthew (PSC) <Matthew.DeWitt@pscnow.com>
Cc: Gabriel, Edgar G <Edgar.G.Gabriel@andeavor.com>; Easley, Robert@DTSC <Robert.Easley@dtsc.ca.gov>; Istre, Toby (PSC) <Toby.Istre@pscnow.com>; Miller, Scott (PSC) <Scott.Miller@pscnow.com>
Subject: RE: Document Request

Mr. DeMarco,

Please find attached to this email PSC's response to the Department of Toxic Substance's requests regarding Tank 650 that were emailed on Friday, September 29th. Please feel free to reach out with any questions or comments.

Thanks,
Brandon

Brandon Teel, PE, RG
Group Leader - Environmental Consulting & Compliance

Providing Tomorrow's Solutions Today.®

Phone: **(618) 281-1517** | Mobile: **(314) 660-3476** | Fax: **(618) 281-5120**

www.PSCNow.com | 210 West Sand Bank Road, Columbia, IL 62236

View my profile on LinkedIn

From: Kodysz, Kenneth (PSC)
Sent: Monday, October 02, 2017 6:54 PM
To: DeMarco, Daniel@DTSC <Daniel.DeMarco@dtsc.ca.gov>; Moreau, David (PSC) <David.Moreau@pscnow.com>; Callihan, Charles (PSC) <Charles.Callihan@pscnow.com>; DeWitt, Matthew (PSC) <Matthew.DeWitt@pscnow.com>; Teel, Brandon (PSC) <Brandon.Teel@pscnow.com>
Cc: Gabriel, Edgar G <Edgar.G.Gabriel@andeavor.com>; Easley, Robert@DTSC <Robert.Easley@dtsc.ca.gov>; Istre, Toby (PSC) <Toby.Istre@pscnow.com>; Miller, Scott (PSC) <Scott.Miller@pscnow.com>
Subject: RE: Document Request

Daniel,

I wanted to respond to you and let you know that we are gathering the requested information and data so that we can forward it in one response, and so that we can internally follow our processes and approvals for capturing and sending the data. Of course, please feel free to call me if you need me in the interim while we prepare our response.

Respectfully,

Kenn Kodysz

Director of Engineered Services, Western Region

C: (661) 444-4734

E: kenneth.kodysz@pscnow.com

From: DeMarco, Daniel@DTSC [mailto:Daniel.DeMarco@dtsc.ca.gov]
Sent: Friday, September 29, 2017 8:36 AM
To: Kodysz, Kenneth (PSC) <Kenneth.Kodysz@pscnow.com>; Moreau, David (PSC) <David.Moreau@pscnow.com>; Callihan, Charles (PSC) <Charles.Callihan@pscnow.com>
Cc: Gabriel, Edgar G <Edgar.G.Gabriel@andeavor.com>; Easley, Robert@DTSC <Robert.Easley@dtsc.ca.gov>
Subject: Document Request

Good Afternoon,

Thank you for the explanation of your processes on Tuesday. I'm following up with this email to request a few documents and clarify a few questions that arose during the inspection. First and foremost, I was hoping to take a look at your most recent permit with the Bay Area Air Quality Management District (BAAQMD) for the thermal oxidizer and any other units that might be under permit (scrubbers?) with BAAQMD. Also regarding your air permits, has the BAAQMD issued you any NOV's or have you self-notified for any exceedances at any point?

I'm also interested in knowing what kind of secondary containment the centrifuge had. Under our PBR regulations, the application for the TTU needs to include a statement signed by an independent engineer registered in California that indicates that the containment system is suitably designed to achieve the requirements of section 66264.175 (impervious to leaks, sloped, correct size, run-on prevented, etc.). I know Mr. Callahan is an engineer certified in Texas and Louisiana, but I'm not sure if he is eligible to submit a statement testifying to the above design standards in California. This statement could have been included in the application and I may have missed it as well.

It was also noted by DTSC that the Baker tanks conducting oxidation and elementary neutralization had excluded recyclable material (ERM) labels on them. In DTSC's opinion the foul and sour water is a solid waste based on descriptions about the sources of the waste and hazardous based on the sample results submitted in the TTU application. Therefore the process of oxidation and elementary neutralization is considered treatment of a hazardous waste. Is PSC or Tesoro claiming an exclusion or exemption for the waste or treatment process? If not the oxidation and elementary neutralization steps will need to be included in the TTU site specific and unit specific notifications, if they are eligible for tiered permitting, or an application will have to be submitted for a full RCRA or standardized permit. The accompanying Baker tanks conducting the elementary neutralization and oxidation will also need adequate secondary containment to cover 10% of the aggregate of the tanks plus a 25-year, 24-hour rainfall event, or, if secondary containment is set up for the individual tanks, equal to the size of the tank plus the 25-year, 24-hour rainfall event and accompanying certification as elucidated above if they are included in the TTU notification.

The documents DTSC would like to request from PSC include:

- Written operating instructions and a record of the dates, volumes, residual management, and types of wastes treated in the units.
- Written inspection log.
- Waste analysis plan.
- Closure plan for the unit.
- Training records for the two employees identified during the inspection (Sean St. Pierre, Mike Brook).
- Contingency Plan.

Let me know if you have any questions or clarifications on the questions posed or documents requested and I can work with you. Thank you.

Daniel DeMarco

Environmental Scientist

Department of Toxic Subtances Control

Enforcement and Emergency Response Unit

700 Heinz Avenue, Berkeley, CA

(510) 540-3841

October 7, 2017

Daniel DeMarco
Environmental Scientist
Department of Toxic Substances Control
Enforcement and Emergency Response Unit
700 Heinz Avenue
Berkeley, CA
(510) 540-3841

Dear Mr. DeMarco:

Subject: Response to DTSC Email Requests
Tesoro/Andeavor Tank 650
150 Solano Way
Martinez, California

PSC Industrial Outsourcing, LP (PSC) is providing this response to the Department of Toxic Substances Control's (DTSC's) email requests pertaining to a site visit on Tuesday, September 26, 2017 at the above-mentioned Tesoro/Andeavor facility related to work involving Tank 650 (tank). These DTSC requests were communicated to Kenn Kodysz of PSC in two separate emails on Friday, September 29th.

A Transportable Treatment Unit (TTU) Permit by Rule application for the tank project was provided by PSC to DTSC on June 6, 2017. At that time, the project was anticipated to involve removal, treatment, and proper disposal of the material stored in the tank, along with discharge of oily water to the oil-water separator which is a part of the refinery's wastewater treatment system. At that time, an analysis of the sludge was available and was provided in the application package. However, PSC's knowledge of the material stored in the tank was limited and no analytical results indicating significant amounts of petroleum were available. Assuming that the material in the tank may be classified as a waste, the notification letter for a TTU was provided to DTSC and was approved by the DTSC in a letter dated September 7, 2017.

As the project began it was discovered that the sludge contained a much higher concentration of petroleum hydrocarbons than first anticipated. As a result, the character of the project altered to that of recovery of oil, rather than disposal of what was initially thought might be a waste product. The oil recovered from this operation is returned to the refinery. According to 40 CFR 261.4(a)(12), recovered oil from refinery process units returned to the petroleum refinery is exempt from RCRA. Additionally, water centrate from the PSC oil-recovery process is discharged to the ammonia recovery unit for subsequent recovery of ammonia as a product by Andeavor, or the oil water separator which is part of the refinery's wastewater treatment system.

As stated above, the tank also contains process water that is processed in a refinery process unit, for re-use within the refinery or, sent to the wastewater treatment system. This processed water becomes part of a wastewater point source discharge, which is regulated under the Clean Water Act, and is therefore excluded and is not a hazardous waste.

The only waste stream from this process is the solid material that comes out of the centrifuge after oil recovery. This waste material is shipped off-Site to an approved disposal facility by Tesoro/Andeavor under permit.

In conclusion, given the nature of the tank contents and the recovery and re-use of the oil and process water, we feel the request for the TTU was ultimately proven not necessary. If you have any questions or comments, feel free to reach me at brandon.teel@pscnow.com.

Sincerely,

PSC Industrial Outsourcing, LP

Brandon Teel, PE*, RG**
Group Leader - Environmental Consulting & Compliance
*Registered in MO and IL
**Registered in MO

Copies to: Robert Easley, Department of Toxic Substances Control
Edgar Gabriel, Andeavor Corporation (Tesoro Corporation)
Matthew DeWitt, PSC
David Moreau, PSC
Charles Callihan, PSC
Toby Istre, PSC
Scott Miller, PSC

To: Lin, Sharon[Lin.Sharon@epa.gov]
From: michael.monson@shell.com
Sent: Wed 3/23/2016 8:20:07 PM
Subject: RE: Request for Additional Information

Data from 2003 is stored off-site. I will need to request it.

Michael Monson

Staff Engineer - Environmental

Martinez Refinery, 3485 Pacheco Blvd, Martinez CA 94553

Phone: 925-313-5516

Email: michael.monson@shell.com

Internet: http://www.shelloilproductsus.com/

From: Lin, Sharon [mailto:Lin.Sharon@epa.gov]
Sent: Wednesday, March 23, 2016 1:10 PM
To: Monson, Michael J SOPUS-DMW/323
Subject: RE: Request for Additional Information

Hi, Mike,

Could I get the 2003 ETP-1 data too? Also, please advise the frequency of the sampling for the ETP-1 feed and the location of the sampling point. Thanks.

Sharon

From: michael.monson@shell.com [mailto:michael.monson@shell.com]
Sent: Wednesday, March 23, 2016 11:26 AM
To: Lin, Sharon <Lin.Sharon@epa.gov>
Cc: michael.monson@shell.com
Subject: Request for Additional Information

Sharon,

The hard copy will be mailed later today, but I'm sending you electronic copies as well. Attached are the cover letter, analytical reports, and the BWON reports (without appendices A & B due to size constraints).

Please let me know if you have any further questions,

Michael Monson

Staff Engineer - Environmental

Martinez Refinery, 3485 Pacheco Blvd, Martinez CA 94553

Phone: 925-313-5516

Email: michael.monson@shell.com

Internet: http://www.shelloilproductsus.com/

To: Ripp, Thomas[Ripp.Tom@epa.gov]; Lin, Sharon[Lin.Sharon@epa.gov]
Cc: Schofield, John[Schofield.John@epa.gov]; Bellot, Michael[Bellot.Michael@epa.gov]; Vizard, Elizabeth[Vizard.Elizabeth@epa.gov]
From: McDaniel, Doug
Sent: Wed 10/26/2016 8:38:13 PM
Subject: RE: U.S. EPA settles with Valero for hazardous waste violations at Bay Area refinery

This is helpful, thanks Tom.

D

Douglas K. McDaniel

Chief, Waste and Chemical Section

Enforcement Division

U.S. EPA Region 9

(415) 947-4106

From: Ripp, Thomas
Sent: Wednesday, October 26, 2016 12:38 PM
To: Lin, Sharon <Lin.Sharon@epa.gov>
Cc: McDaniel, Doug <McDaniel.Doug@epa.gov>; Schofield, John <Schofield.John@epa.gov>; Bellot, Michael <Bellot.Michael@epa.gov>; Vizard, Elizabeth <Vizard.Elizabeth@epa.gov>
Subject: RE: U.S. EPA settles with Valero for hazardous waste violations at Bay Area refinery

Sharon, as we discussed, while you may have calculated the 5,000 pounds of benzene released using the CCDS guide, it really does not convey the proper magnitude of the enforcement action. In a case like this, converting the total amount of waste water into just pounds of benzene seems to minimize the results of the action. The region has required the facility to (if I read you calculations correctly) properly treat an average of 2.35 million gallons of wastewater annually (D018 waste). I think it would be more proper to use that number in a press release since there is a limit for benzene above which material containing benzene becomes a hazardous waste.

I would use table 3-4 on page 3-30 from the "Guide to Calculating Environmental Benefits from EPA Enforcement Cases: FY2014 Update" to calculate and report the environmental harm:

"Hazardous Waste" or other hazardous or toxic materials/substances that have contaminated an environmental medium such as groundwater aquifer, soil or sediment, and structures or debris such as wood, plastic, synthetic material or decommissioned equipment that is contaminated with "hazardous waste" or other hazardous or toxic material/substance.

"Estimated Contaminated Water/Aquifer to be Cleaned Up" **Cubic Yards** **Water**

"Estimated Contaminated Soil/Debris to be Cleaned Up" **Cubic Yards** **Land or Soil**

So in this case you would estimate the cubic yards of water contaminated that needs to be cleaned up which is:

23488457 gallons or 116294 cubic yards over 10 years or 11,630 cubic yards of water a year on average (for plain understanding I'd use gallons in any press release).

Give me a call if you have any questions.

From: Lin, Sharon
Sent: Tuesday, October 18, 2016 10:50 AM
To: Ripp, Thomas <Ripp.Tom@epa.gov>
Cc: McDaniel, Doug <McDaniel.Doug@epa.gov>; Schofield, John <Schofield.John@epa.gov>
Subject: FW: U.S. EPA settles with Valero for hazardous waste violations at Bay Area refinery

Hi, Tom,

Sorry that I didn't send this earlier. I was on travel last week. This is our first refinery settlement in the past 10+ years. Thanks for your support.

Sharon

From: U.S. Environmental Protection Agency [mailto:noreply-subscriptions@epa.gov]
Sent: Wednesday, October 05, 2016 1:48 PM
To: Lin, Sharon <Lin.Sharon@epa.gov>
Subject: U.S. EPA settles with Valero for hazardous waste violations at Bay Area refinery

For Immediate Release: October 5, 2016
Media Contact: Michele Huitric, huitric.michele@epa.gov

U.S. EPA settles with Valero for hazardous waste violations at Bay Area refinery

SAN FRANCISCO – Today, the U.S. Environmental Protection Agency announced a settlement with Valero Refining Company - California over improper management of hazardous waste and toxic chemicals at its crude oil refinery in Benicia. Violations included illegally disposing benzene into an unlined stormwater retention pond and not alerting the public about all of its toxic chemical releases.

Valero will pay a $157,800 penalty and modify its piping operations; submitting a work plan by the end of 2016 and completing the project by June 2017. This action will prevent an estimated 5,000 lbs of benzene, a known human carcinogen, from being released into the environment over the next 10 years. The company will also correct and resubmit its toxic chemical release reports.

"Valero's operations can affect both the communities near the refinery and the wildlife habitat of Suisun Bay," said Alexis Strauss, EPA's Acting Regional Administrator for the Pacific Southwest. "It is critical for Valero to comply with federal laws that protect public health and our natural resources."

Valero Refining Company - California is a subsidiary of Valero Energy Corporation, a global manufacturer and marketer of transportation fuels, petrochemical products and power, based in San Antonio, Texas. EPA conducted an inspection at Valero's Benicia refinery in May 2014 to assess compliance with the federal Resource Conservation and Recovery Act and the Emergency Planning and Community Right-to-Know Act.

Additional violations uncovered by the inspection included the company's failure to determine if solid waste generated at the refinery was hazardous; failure to maintain and operate the facility as needed to minimize the possibility of any unplanned release; and failure to maintain complete and accurate records at the facility.

This investigation was part of EPA's continuing efforts to ensure communities located near complex industrial facilities are informed of the toxic releases from those facilities. This action also reflects EPA's focus on the largest hazardous waste generators, including petroleum refineries.

The federal Resource Conservation and Recovery Act program oversees the safe management and disposal of hazardous waste. Under authority delegated by EPA, the California Department of Toxic Substances Control enforces this hazardous waste management program in the state. EPA routinely conducts RCRA inspections in its state oversight role, to ensure the state effectively implements its program.

The Emergency Planning and Community Right-to-Know Act was created to help communities plan for chemical emergencies. It also requires industry to report on the storage, use and releases of hazardous substances in a community. To accomplish this, EPA created the Toxics Release Inventory. This publicly available database contains information on toxic chemical releases and other waste management activities reported annually by certain industries and federal facilities.

For more information on RCRA, please visit: https://www.epa.gov/rcra

For more information about the Emergency Planning and Community Right-to-Know Act, please visit: http://www2.epa.gov/epcra

For more information on the Toxic Releases Inventory Program, please visit: https://www.epa.gov/toxics-release-inventory-tri-program

###

If you would rather not receive future communications from Environmental Protection Agency, let us know by clicking here.
Environmental Protection Agency, 75 Hawthorne Street, San Francisco, CA 94105 United States

To: Lin, Sharon[Lin.Sharon@epa.gov]
Cc: Sugerman, Rebecca[Sugerman.Rebecca@epa.gov]; Frazer, Russell[Frazer.Russell@epa.gov]; Howe, Chris[Chris.Howe@valero.com]
From: Cuffel, Donald
Sent: Fri 7/31/2015 7:58:56 PM
Subject: FW: CD-R disc

Good afternoon Sharon,

The CD-R disc in the manila envelope with EPA Region IX's return address is blank. It is also unlabeled. Perhaps the disc intended for Valero is still in your offices on Hawthorne Street?

We do not have the benefit of the data files supporting EPA's cover letter content; therefore, I believe that the countdown for our responses will be reset to the date on which we receive the full set of data files you intended to be included on the CD-R.

I have saved the disc and envelope in case EPA wants to review it. Please advise when we can expect the correct CD-R. Thank you,

Don

Donald W. Cuffel

Manager - Environmental Engineering

Valero Refining Company - CA, Benicia Refinery

707 745 7545

From: Lazorik, John
Sent: Friday, July 31, 2015 12:52 PM
To: Cuffel, Donald; Howe, Chris
Subject: FW: CD-R disc

I checked with Aaron Cruz how best to retrieve the information on the disc that EPA provided to assure there were no viruses or other threats. Aaron checked the disc on his computer and found that the disc was blank.

John Lazorik

Sr. Staff Environmental Engineer

Valero Benicia Refinery

3400 East Second Street Benicia, CA 94510

Office: 707-745-7660 Fax: 707-745-7339

john.lazorik@valero.com

From: Cruz, Aaron
Sent: Friday, July 31, 2015 12:49 PM
To: Lazorik, John
Subject: CD-R disc

John

Looking at the disc and how Windows behaves when inserted in the drive, I believe the disc is blank.

Regards,

Aaron Cruz

IS Analyst

Valero Benicia Refinery

VHD

707 745-7932

To: Schofield, John[Schofield.John@epa.gov]; Lin, Sharon[Lin.Sharon@epa.gov]
From: DeMarco, Daniel@DTSC
Sent: Tue 10/10/2017 3:08:24 PM
Subject: Response to Tesoro/Andeavor

Good Morning John and Sharon,

I'm preparing to send this response out to PSC, who is operating under a TTU PBR treatment to run a centrifuge on the foul and sour water tank (tank 650) at Andeavor Refinery. I'm hoping you both wouldn't mind telling me If I'm way off base with this response. I'm hoping to send this out some time this Morning. Thanks for your time!

Danny

Good Morning Brandon,

Thank you for your response. The only reason PSC is able to conduct the permit-by-rule treatment activities that it is conducting at the Tesoro/Andeavor refinery is because the treatment activities are federally exempt or excluded, in part because of the Code of Federal Regulations Title 40, section 261.4(a)(12) exclusion you referenced. As far as I'm aware, the regulation you cited was not adopted by the State of California and the federal exclusion does not exclude the secondary oil-bearing waste from the classification as solid waste in California, which means, according to the sampling results, the waste will likely be considered hazardous waste in California and the treatment activities PSC is conducting at the refinery would need to be permitted.

The State of California did adopt a similar recycling exclusion for secondary oil bearing waste into our California Health and Safety Code under section 25144. In order to be excluded from classification as waste, and excluded from the necessity of a transportable treatment unit permit from DTSC, you would need to meet all of the standards set forth in this section. From my understanding, the waste stream is water and sludge containing high quantities of ammonia and sulfur. The information I have received regarding the waste stream is the same analytical sampling results that you reviewed and submitted in your permit application to DTSC prior to beginning treatment. I saw no significant oil or hydrocarbon constituents to validate the claim that the "secondary oil-bearing waste" is in fact oil bearing or that the recycling that is being conducted is legitimate. Do you have any analytical results or statistics about the quantities of oil

generated and recycled that have resulted from your treatment process? Any analytical results from tank 650 which would indicate the presence of recyclable oil?

I am still wanting to review the documents listed in the initial email to PSC from DTSC on September 29, 2017. The documents requested included:

- Written operating instructions and a record of the dates, volumes, residual management, and types of wastes treated in the units.
- Written inspection log.
- Waste analysis plan.
- Closure plan for the unit.
- Training records for the two employees identified during the inspection (Sean St. Pierre, Mike Brook).
- Contingency Plan.

Thank you.

Daniel DeMarco

Environmental Scientist

Department of Toxic Subtances Control

Enforcement and Emergency Response Unit

700 Heinz Avenue, Berkeley, CA

(510) 540-3841

To: Lin, Sharon[Lin.Sharon@epa.gov]
Cc: McDaniel, Doug[McDaniel.Doug@epa.gov]; Schofield, John[Schofield.John@epa.gov]; Bellot, Michael[Bellot.Michael@epa.gov]; Vizard, Elizabeth[Vizard.Elizabeth@epa.gov]
From: Ripp, Thomas
Sent: Wed 10/26/2016 7:37:53 PM
Subject: RE: U.S. EPA settles with Valero for hazardous waste violations at Bay Area refinery

Sharon, as we discussed, while you may have calculated the 5,000 pounds of benzene released using the CCDS guide, it really does not convey the proper magnitude of the enforcement action. In a case like this, converting the total amount of waste water into just pounds of benzene seems to minimize the results of the action. The region has required the facility to (if I read you calculations correctly) properly treat an average of 2.35 million gallons of wastewater annually (D018 waste). I think it would be more proper to use that number in a press release since there is a limit for benzene above which material containing benzene becomes a hazardous waste.

I would use table 3-4 on page 3-30 from the "Guide to Calculating Environmental Benefits from EPA Enforcement Cases: FY2014 Update" to calculate and report the environmental harm:

"Hazardous Waste" or other hazardous or toxic materials/substances that have contaminated an environmental medium such as groundwater aquifer, soil or sediment, and structures or debris such as wood, plastic, synthetic material or decommissioned equipment that is contaminated with "hazardous waste" or other hazardous or toxic material/substance.		
"Estimated Contaminated Water/Aquifer to be Cleaned Up"	**Cubic Yards**	**Water**
"Estimated Contaminated Soil/Debris to be Cleaned Up"	**Cubic Yards**	**Land or Soil**

So in this case you would estimate the cubic yards of water contaminated that needs to be cleaned up which is:

23488457 gallons or 116294 cubic yards over 10 years or 11,630 cubic yards of water a year on average (for plain understanding I'd use gallons in any press release).

Give me a call if you have any questions.

From: Lin, Sharon
Sent: Tuesday, October 18, 2016 10:50 AM
To: Ripp, Thomas <Ripp.Tom@epa.gov>
Cc: McDaniel, Doug <McDaniel.Doug@epa.gov>; Schofield, John <Schofield.John@epa.gov>
Subject: FW: U.S. EPA settles with Valero for hazardous waste violations at Bay Area refinery

Hi, Tom,

Sorry that I didn't send this earlier. I was on travel last week. This is our first refinery settlement in the past 10+ years. Thanks for your support.

Sharon

From: U.S. Environmental Protection Agency [mailto:noreply-subscriptions@epa.gov]
Sent: Wednesday, October 05, 2016 1:48 PM
To: Lin, Sharon <Lin.Sharon@epa.gov>
Subject: U.S. EPA settles with Valero for hazardous waste violations at Bay Area refinery

For Immediate Release: October 5, 2016
Media Contact: Michele Huitric, huitric.michele@epa.gov

U.S. EPA settles with Valero for hazardous waste violations at Bay Area refinery

SAN FRANCISCO – Today, the U.S. Environmental Protection Agency announced a settlement with Valero Refining Company - California over improper management of hazardous waste and toxic chemicals at its crude oil refinery in Benicia. Violations included illegally disposing benzene into an unlined stormwater retention pond and not alerting the public about all of its toxic chemical releases.

Valero will pay a $157,800 penalty and modify its piping operations; submitting a work plan by the end of 2016 and completing the project by June 2017. This action will prevent an estimated 5,000 lbs of benzene, a known human carcinogen, from being released into the environment over the next 10 years. The company will also correct and resubmit its toxic chemical release reports.

“Valero’s operations can affect both the communities near the refinery and the wildlife habitat of Suisun Bay,” said Alexis Strauss, EPA's Acting Regional Administrator for the Pacific Southwest. "It is critical for Valero to comply with federal laws that protect public health and our natural resources."

Valero Refining Company - California is a subsidiary of Valero Energy Corporation, a global manufacturer and marketer of transportation fuels, petrochemical products and power, based in San Antonio, Texas. EPA conducted an inspection at Valero’s Benicia refinery in May 2014 to assess compliance with the federal Resource Conservation and Recovery Act and the Emergency Planning and Community Right-to-Know Act.

Additional violations uncovered by the inspection included the company’s failure to determine if solid waste generated at the refinery was hazardous; failure to maintain and operate the facility as needed to minimize the possibility of any unplanned release; and failure to maintain complete and accurate records at the facility.

This investigation was part of EPA’s continuing efforts to ensure communities located near complex industrial facilities are informed of the toxic releases from those facilities. This action also reflects EPA’s focus on the largest hazardous waste generators, including petroleum refineries.

The federal Resource Conservation and Recovery Act program oversees the safe management and disposal of hazardous waste. Under authority delegated by EPA, the California Department of Toxic Substances Control enforces this hazardous waste management program in the state. EPA routinely conducts RCRA inspections in its state oversight role, to ensure the state effectively implements its program.

The Emergency Planning and Community Right-to-Know Act was created to help communities plan for chemical emergencies. It also requires industry to report on the storage, use and releases of hazardous substances in a community. To accomplish this, EPA created the Toxics Release Inventory. This publicly available database contains information on toxic chemical releases and other waste management activities reported annually by certain industries and federal facilities.

For more information on RCRA, please visit: https://www.epa.gov/rcra

For more information about the Emergency Planning and Community Right-to-Know Act, please visit: http://www2.epa.gov/epcra

For more information on the Toxic Releases Inventory Program, please visit: https://www.epa.gov/toxics-release-inventory-tri-program

###

If you would rather not receive future communications from Environmental Protection Agency, let us know by clicking here.
Environmental Protection Agency, 75 Hawthorne Street, San Francisco, CA 94105 United States

To: Lin, Sharon[Lin.Sharon@epa.gov]
From: Soria, Maria@DTSC
Sent: Mon 10/9/2017 11:07:01 PM
Subject: RE: California Exclusion for Oil Bearing Hazardous Secondary Materials

Thank you Sharon.

From: Lin, Sharon [mailto:Lin.Sharon@epa.gov]
Sent: Thursday, September 28, 2017 10:05 AM
To: Soria, Maria@DTSC <Maria.Soria@dtsc.ca.gov>; Kou, Roberto@DTSC <Roberto.Kou@dtsc.ca.gov>
Cc: McDaniel, Doug <McDaniel.Doug@epa.gov>; Schofield, John <Schofield.John@epa.gov>
Subject: FW: California Exclusion for Oil Bearing Hazardous Secondary Materials

Hi, Maria and Roberto,

I am not sure who the assigned DTSC inspector is for the Chevron El Segundo Refinery but just wanted to keep DTSC in the loop regarding my communication with the El Segundo CUPA inspector and Chevron staff, regarding California implementation of the "broader in scope" requirements.

Also I will be inspecting DeMenno Kerdoon with Jackie Vega from NEIC in October. John will send the official notification to DTSC. I inspected D/K Environmental in August, accompanied by Ruth and Bailey of your staff. I am still following up with D/K Environmental on a couple of items. The World Oil Corp owns D/K Environmental, DeMenno Kerdoon, Lunday Thagard refinery, Asbury Environmental Services, and etc., however, as of today, they still couldn't provide me with an organization chart that shows all the subsidiaries and their connections. I will keep the DTSC inspectors informed of my progress. Thanks.

Sharon

From: Lin, Sharon
Sent: Thursday, September 21, 2017 10:46 AM
To: 'nancy.girten@chevron.com' <nancy.girten@chevron.com>
Cc: 'Koester, Steve' <skoester@elsegundo.org>
Subject: California Exclusion for Oil Bearing Hazardous Secondary Materials

Hi, Nancy,

Steve Koester with El Segundo CUPA talked to me this morning regarding the oil bearing hazardous secondary materials exclusion that Chevon El Segundo is claiming. I believe you are claiming the oil bearing hazardous secondary materials exclusion under 40 CFR 261.4(a)(12) in the federal RCRA regulations and §25143.2(c)(1) in the California Health and Safety Code. California's oil bearing hazardous secondary materials exclusion is embedded in the recyclable materials provisions in §25143.2(c) of the California Health and Safety Code with reference to other sections in §25143.2. Since the §25143.2(c)(1) is not the exact matching exclusions to the 40 CFR 261.4(a)(12), the California's regulatory requirements would be considered broader in scope and **can't be enforced by EPA** (see attached EPA memo for detailed explanation). For EPA's April 2017 inspection, we only evaluated Chevron El Segundo's compliance against the federally enforceable requirements (e.g. excluding the "broader in scope" requirements). This doesn't preclude the state from enforcing their regulatory and statutory requirements that are broader in scope than the federal requirements. As a matter of fact, the state of California can and should enforce requirements that are applicable to the oil bearing recyclable materials in the state regulations and statutes as appropriate.

Hope this helps. Please feel free to contact me if you have any questions. (415) 972-3446. Thanks.

Sharon

To: Lin, Sharon[Lin.Sharon@epa.gov]
Cc: Asha.Arora@dtsc.ca.gov[Asha.Arora@dtsc.ca.gov]; Natalie.Braden@shell.com[Natalie.Braden@shell.com]; michael.monson@shell.com[michael.monson@shell.com]; Pierre.Espejo@shell.com[Pierre.Espejo@shell.com]
From: michael.monson@shell.com
Sent: Fri 8/28/2015 7:50:06 PM
Subject: RE: Question on Slop Oil Tank at Shell Martinez Refinery

Sharon,

Question:

During EPA's inspection at your facility (Shell Martinez Refinery) in March 2015, we were informed there was no slop oil tank on site. On August 5, 2015, when I was on site with Asha Arora with DTSC and you, we observed a signage of "Slop Tank" on the road near the Recycling Center. Please provide more information on the slop tank(s). Specifically, I would like to know:

(1) Number of and locations of the slop oil tank(s) and associated tank numbers;

(2) Sources of materials that are fed into the slop oil tank(s); and

(3) Management of the Solid/liquid/oil phase of the content in the slop oil tank(s).

Answer/Comments:

The Slop Oil signs date back to prior to 1998, and apparently were never removed. The statements from the March 2015 inspection were accurate, Shell does not generate or store any K049 wastes (Slop Oil emulsion solids).

Person(s) Responding and/or Consulted:

Contributors for each response are provided in alphabetical order.

Jones, Wayne

Monson, Michael

Overman, Steven

General Background:

In 1998, EPA promulgated the Petroleum Refining Process Wastes Rule, which included the exclusion of oil-bearing secondary hazardous materials inserted into the petroleum refining process, 40 CFR 261.4(a)(12)(i):

(12)(i) Oil-bearing hazardous secondary materials (i.e., sludges, byproducts, or spent materials) that are generated at a petroleum refinery (SIC code 2911) and are inserted into the petroleum refining process (SIC code 2911 – including, but not limited to, distillation, catalytic cracking, fractionation, gasification (as defined in 40 CFR 260.10) or thermal cracking units (i.e., cokers)) unless the material is placed on the land, or speculatively accumulated before being so recycled.

In the preamble, section IV.A.1, EPA stated that "this exclusion applies to any oil-bearing materials generated at a petroleum refinery, including oil-bearing wastes currently regulated as listed hazardous wastes (e.g., K048 – K051)."

The previous statements that Shell does not generate K049 (Slop Oil) wastes is accurate as the oil/water emulsion secondary material is processed in our Recovered Oil process prior to being inserted into the crude distillation unit.

Documents Consulted/Examined/Referenced:

Petroleum Refining Process Wastes Rule (63 FR 42110-42189)

Michael Monson

Staff Engineer - Environmental

Martinez Refinery, 3485 Pacheco Blvd, Martinez CA 94553

Phone: 925-313-5516

Email: michael.monson@shell.com

Internet: http://www.shelloilproductsus.com/

From: Lin, Sharon [mailto:Lin.Sharon@epa.gov]
Sent: Wednesday, August 12, 2015 5:07 PM
To: Monson, Michael J SOPUS-DMW/323
Cc: Arora, Asha@DTSC
Subject: Question on Slop Oil Tank at Shell Martinez Refinery

Hi, Mike,

During EPA's inspection at your facility (Shell Martinez Refinery) in March 2015, we were informed there was no slop oil tank on site. On August 5, 2015, when I was on site with Asha Arora with DTSC and you, we observed a signage of "Slop Tank" on the road near the Recycling Center. Please provide more information on the slop tank(s). Specifically, I would like to know:

(1) Number of and locations of the slop oil tank(s) and associated tank numbers;

(2) Sources of materials that are fed into the slop oil tank(s); and

(3) Management of the Solid/liquid/oil phase of the content in the slop oil tank(s).

Please provide this information either as part of your response to the EPA's Information Request letter or reply directly to this email by the end of August. I look forward to hearing from you. Please let me know if you have any questions. Thanks.

Sharon

To: Lin, Sharon[Lin.Sharon@epa.gov]
From: Yang, Teng@DTSC
Sent: Wed 5/27/2015 8:59:04 PM
Subject: RE: SMR Wastes in HWTS -
removed.txt

It does but when you use "Waste Code By Year Matrix" , the HWTS looks for manifests instead of total tons of waste/year (which is what I'm thinking you are looking for?).

To find total tonnage per year I used "Total Yearly Tonnage by Waste Code". But this search doesn't give us the option of specifying RCRA or California.

Were you looking for a particular waste stream?

-Andy

From: Lin, Sharon [mailto:Lin.Sharon@epa.gov]
Sent: Wednesday, May 27, 2015 12:01 PM
To: Yang, Teng@DTSC
Subject: RE: SMR Wastes in HWTS -

Hi, Andy,

Does your system give you the choice of RCRA or California as below?

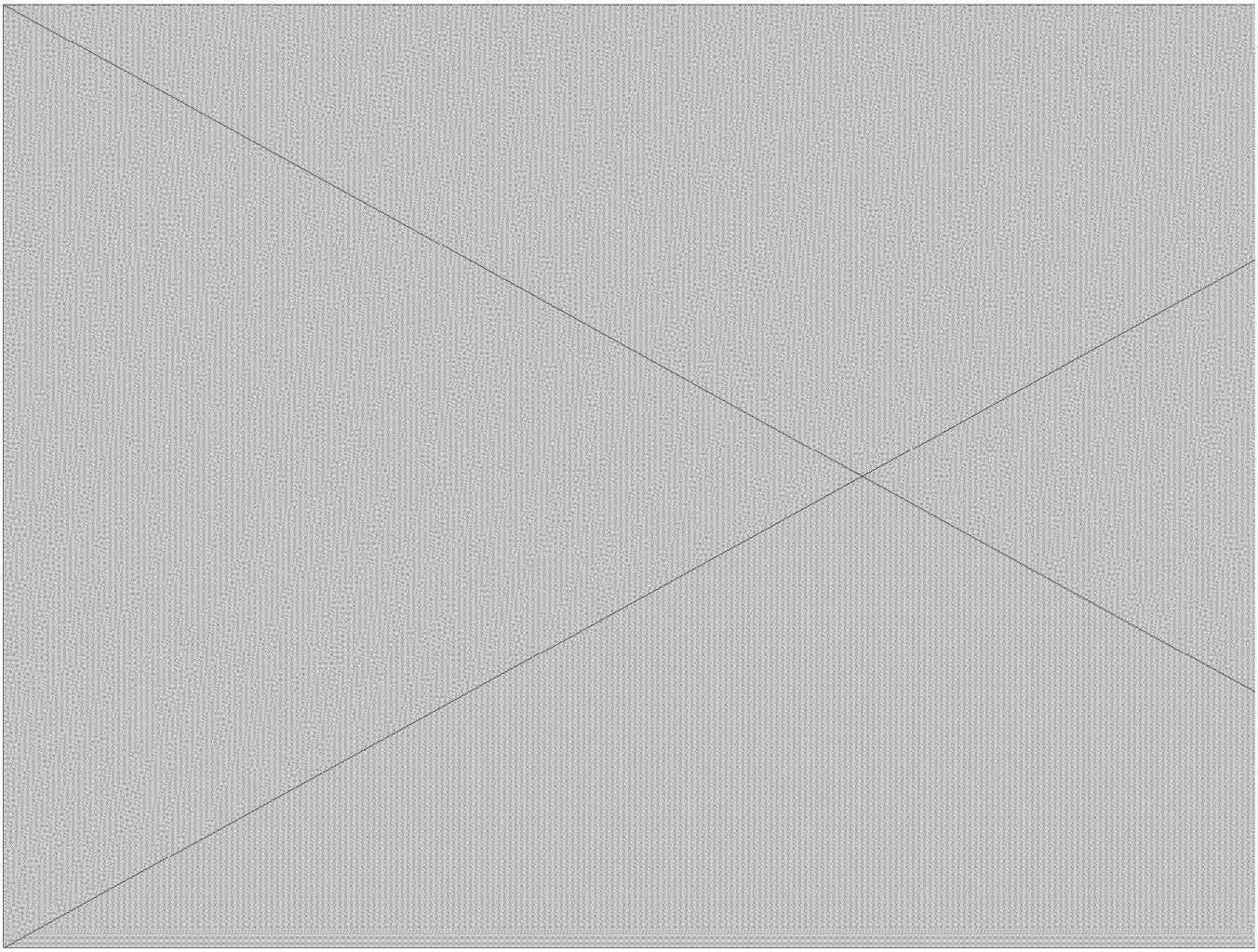

Sharon Lin, P.E.

U.S. Environmental Protection Agency Region 9

Enforcement Division

Air, Waste and Toxics Branch, ENF-2-2
75 Hawthorne Street

San Francisco, CA 94105

Tel: (415) 972-3446

Email: Lin.Sharon@epa.gov

From: Yang, Teng@DTSC [mailto:Teng.Yang@dtsc.ca.gov]
Sent: Wednesday, May 27, 2015 11:54 AM
To: Lin, Sharon
Subject: RE: SMR Wastes in HWTS

Good morning Sharon,

I'm unable to specifically find **RCRA only** wastes. Our HWTS only gives me the California Waste Codes. I have made spreadsheet using the information from the HWTS but I don't think it has the information you're looking for.

Please let me know if you'd like my spreadsheet or if there is anything else that I can help you with.

-Andy

From: Lin, Sharon [mailto:Lin.Sharon@epa.gov]
Sent: Friday, May 22, 2015 10:42 AM
To: Yang, Teng@DTSC
Subject: SMR Wastes in HWTS

Hi, Andy,

I presume you have better access to HWTS than us. Could you run a waste quantity/year for **all** RCRA wastes from 2010-2015 for Shell Martinez Facility? If you could send me the information in a spreadsheet format that would be great.

We are preparing a 3007 information request letter and will send the draft for your review and comment soon. Thanks.

Please call or email me if you have any questions.

BTW, one thing that I do is cross checking the waste generation information with the EPA Petroleum refinery sector notebook RCRA section to see if there are any red flags/Qs (e.g. typical refinery wastes were not reported). There are also three FRs in addition to the regulations that are important for the refinery investigations.

Regs are in 261.4(A)(12)(i) and (ii). The following are the FRs.

-

Oil bearing secondary materials exclusion

August 6, 1998 [63 FR 42110]

January 2, 2008 [73 FR 57]

Recovered Oil exclusion

July 28, 1994 [59 FR 38536]

August 6, 1998 [63 FR 42110]

Sharon Lin, P.E.

U.S. Environmental Protection Agency Region 9

Enforcement Division

Air, Waste and Toxics Branch, ENF-2-2
75 Hawthorne Street

San Francisco, CA 94105

Tel: (415) 972-3446

Email: Lin.Sharon@epa.gov

********** ATTACHMENT REMOVED **********

This message contained an attachment which the administrator has caused to be removed.

********** ATTACHMENT REMOVED **********

Attachment name: [image001.jpg]
Attachment type: [image/jpeg]

To: Lynch, Philip@DTSC[Philip.Lynch@dtsc.ca.gov]
Cc: Larry.Ramirez@dtsc.ca.gov[Larry.Ramirez@dtsc.ca.gov]; Yang, Teng@DTSC[Teng.Yang@dtsc.ca.gov]; Robert.Easley@dtsc.ca.gov[Robert.Easley@dtsc.ca.gov]; Rollins, Christopher[Rollins.Christopher@epa.gov]; Lin, Sharon[Lin.Sharon@epa.gov]; Sakow, Rick[Sakow.Rick@epa.gov]
From: Schofield, John
Sent: Fri 3/20/2015 4:11:56 PM
Subject: Document List
Shell Martinez RefineryDocmentRequest.docx

Dan,

Please find attached the list of documents we either are going to request copies or request to review as part of the inspection. We plan to give this list to Shell as part of the in-briefing. Please review and add any documents/information that DTSC feels we are missing or DTSC would like to add. EPA wants to get this document list finalized by EOB today.

You may notice we have not asked detailed information regarding training. Our approach is to see which folks are actually doing environmental management work and take their names as we perform the inspection. Then during records review will have company pull training records for a randomly selected group of folks. If we see issues we will review more employees HW training records.

regards,

John

****
John Schofield
U. S. Environmental Protection Agency
Region 9
Enforcement Division

Air, Waste and Toxics Branch, ENF-2-2
75 Hawthorne Street
San Francisco, CA 94105
(415) 972-3386
(415) 947-3530 (fax)
schofield.john@epa.gov
****

NOTE: This email, including any attachments, may contain material that is confidential, privileged and/or attorney work product and is for the sole use of the intended recipient. Any review, reliance or distribution by others or forwarding without expressed permission is strictly prohibited. If you are not the intended recipient, please contact the sender and delete all copies.

Shell Martinez Refinery
EPA Records/Documents Request
(March 23-April 1, 2015)

General Procedure

Pursuant to EPA's authority set forth in Section 3007(a) of RCRA, 42 U.S.C. 6927(a), facilities subject to RCRA may be required to furnish information necessary for EPA to administer the Act. During the compliance investigation at Shell Martinez Refinery (SMR), EPA/DTSC inspectors will be reviewing records kept for your facility. In order to expedite this portion of the investigation, the agencies are providing SMR notification of the records that will likely be reviewed on-site. For most documents, the agencies will review the records on-site and request copies, if needed. In certain cases, document copies will be requested for later view at EPA. During the investigation, the agencies will work with SMR to develop a schedule to review these documents. If any of the documents requested can be claimed as Confidential Business Information per 40 CFR Part 2, Subpart B, please mark the documents in accordance with the Attachment 1.

The documentation/information requested below is not a complete list of the information EPA/DTSC may request during and following the inspection.

Part 1 - Records/Document Requested

1. Provide descriptions for all process areas including the following information:
    a. Simplified process flow diagrams (12 copies)
    b. Pollution control equipment
    c. Waste streams produced

2. Management organization chart (including environmental department) (1 copy)

3. Site map of the facility (12 copies)

4. Provide a list of solid/hazardous waste generated on-site by process area, equipment that generates it, and how it is handled (2 copies[1])

5. Provide all variances and/or exemption from the RCRA requirements along with any related correspondence (2 copies)

6. Provide any current delistings for hazardous wastes generated on-site and related correspondence (2 copies)

7. NPDES discharge permit and associated permit application (most recent version), including any separate storm water permit (2 copies).

[1] On copy for EPA and a copy to DTSC

ED_001593_00016012

8. Any wastewater pretreatment permit agreements (2 copies)

9. Plans and/or written descriptions of the sewer system (including by-pass capability), monitoring stations, and outfall locations. Include process, sanitary, and stormwater sewers. (2 copies)

10. Description of all wastewater treatment systems, including schematic diagrams and any process changes (12 copies).

11. Provide a current status of RCRA permitted hazardous waste management units on-site; schedule for closure. (2 copies)

12. Documentation of off-site waste shipments for the past 3 years, including manifests and associated land disposal restriction (LDR) paperwork, bills of lading, recycling certifications (contracts), shipping records, etc. (1 copy each for review on-site)

13. Exception reports for any manifests not received back from the designated facility (last 3 years). (1 copy for review on-site)

14. Latest biennial report (1 copy for review on-site). Include documentation that verifies the submission date.

15. Plot plan showing locations of all less than 90-days accumulation areas and tanks. Also identify locations of all waste generation points and satellite accumulation areas (2 copies).

Part 2 – Documents likely to be requested by EPA inspectors (schedule to be determined)

1. Solid waste and hazardous waste determinations, and any waste analysis data used to support these determinations.

2. Documentation of any reportable spills and/or releases of hazardous substances at the facility for the last 3 years.

3. All records for responses to any reportable spills in the last 5 years, including types and quantities of materials spilled, locations, analytical data, and response measures taken.

4. Records of all hazardous waste shipped from an off-site facility for on-site treatment, recycling, or disposal.

5. Waste analysis plan for treating, storing, or disposing of any hazardous wastes.

6. Training plan, and employee training records for hazardous waste handlers, including job titles and descriptions and name of each employee.

ED_001593_00016012

7. Contingency plan and documentation for any incidents that required implementation of the plan.

8. Inspection schedules, logs/summaries for all container storage areas and <90 day accumulation areas (last 3 years).

9. Groundwater analyses and reports for any surface impoundment(s), landfill, or land treatment facilities on-site.

10. For each of the facility ponds:

    a. Regulatory status, including any claimed exemptions
    b. Description of pond construction
    c. Description of the dimensions
    d. Description of pond maintenance activities including scope and frequency of inspections and repair
    e. Analysis of materials discharged into each pond
    f. Description of pond operations, such as aeration, skimming, cleaning, water cannons, dredging.
    g. Analysis of any sludges or wastewater contained in the pond

11. List of units, and supporting documentation, that are subject to applicable 40 CFR 264/265 Subpart AA. This applies to process vents associated with distillation, fractionation; thin-film evaporation, solvent extraction, or air/steam stripping operations that manage hazardous wastes with organic concentrations of at least 10 parts per million by weight (ppmw).

12. List of units, and supporting documentation, that are subject to applicable 40 CFR 264/265 Subpart BB. This applies to equipment that contains or contacts hazardous wastes with organic concentrations of at least 10% by weight.

13. List of units, and supporting documentation, that are subject to applicable 40 CFR 264/265 Subpart CC. This applies to tanks, containers, and surface impoundment that treat, store, or dispose of hazardous waste that contain a volatile organic concentration of more than 500 ppmw.

14. Documentation of ongoing corrective action activities including monitoring reports and workplans.

15. Any enforcement actions currently in effect or issued in the last 5 years (including Notices of Violation (NOVs), consent decrees, orders, and agreements), and all related correspondence and deliverables including monitoring reports under the agreements.

ED_001593_00016012

Attachment 1
Confidential Information[2]

The information requested herein must be provided even though SMR may contend that it includes confidential information or trade secrets. SMR may assert a confidentiality claim covering part or all of the information requested, pursuant to Section 3007(b) of RCRA, 42 U.S.C. § 6927(b), and 40 C.F. R. § 2.203(b).

If you make a claim of confidentiality for any of the information SMR provides to EPA, you must prove that claim. For each document or response you claim confidential, you must separately address the following points:

i. clearly identify the portions of the information alleged to be entitled to confidential treatment;
ii. ii.. the period of time for which confidential treatment is desired (e.g., until a certain date, until the occurrence of a specific event, or permanently);
iii. measures taken by you to guard against the undesired disclosure of the information to others;
iv. the extent to which the information has been disclosed to others, and the precautions taken in connection therewith;
v. pertinent confidentiality determinations, if any, by EPA or other federal agencies, and a copy of any such determinations or reference to them, if available; and
vi. whether you assert that disclosure of the information would likely result in substantial harmful effects on your business' competitive position, and if so, what those harmful effects would be, why they should be viewed as substantial, and an explanation of the causal relationship between disclosure and such harmful effects.

To make a confidentiality claim, please stamp, or type, confidential on all confidential responses and any related confidential documents. Confidential portions of otherwise nonconfidential documents should be clearly identified. You should indicate the date, if any, after which the information need no longer be treated as confidential.

All confidentiality claims are subject to EPA verification. It is important that you satisfactorily show that you have taken reasonable measures to protect the confidentiality of the information and that you intend to continue to do so, and that it is not and has not been obtainable by legitimate means without your consent. If no such claim accompanies the information when it is received by EPA, then it may be made available to the public by EPA without further notice to you.

If the EPA determines that the information so designated meets the criteria set forth in 40 C.F.R. § 2.208, the information will be disclosed only to the extent, and by means of the procedures specified in 40 C.F.R. Part 2, Subpart B..

[2] DTSC has its CBI information claim/management requirements that are separate from EPA's.

ED_001593_00016012

ED_001593_00016012

To: Lin, Sharon[Lin.Sharon@epa.gov]
From: Soria, Maria@DTSC
Sent: Mon 12/21/2015 11:57:14 PM
Subject: FW: Exxon Mobil Refinery Torrance, California
Tiered Permitting.pdf
Envirostor.pdf

Hi Sharon. I just realized I didn't get back to you on this site as promised. I will be forwarding additional emails.

From: Eshaghian, Mike@DTSC
Sent: Thursday, December 10, 2015 11:09 AM
To: Blum, Phil@DTSC; Bailey, Peter@DTSC; Soria, Maria@DTSC
Cc: Nieto, Edward@DTSC
Subject: RE: Exxon Mobil Refinery Torrance, California

I found the attached documents for the conditional Exemption in our file room. I also checked the Envirostor and found the attached information. I hope it helps. We have one folder in Chatsworth file room but most of the files should be in Cypress and Berkeley file room according to our file room computer data. Thanks.

From: Blum, Phil@DTSC
Sent: Thursday, December 10, 2015 9:25 AM
To: Bailey, Peter@DTSC
Cc: Nieto, Edward@DTSC; Eshaghian, Mike@DTSC
Subject: RE: Exxon Mobil Refinery Torrance, California

Ok, thanks Peter.

Phil Blum

Supervisor

Permitting Division, Chatsworth

818.717.6694

From: Bailey, Peter@DTSC
Sent: Thursday, December 10, 2015 7:46 AM
To: Blum, Phil@DTSC
Cc: Nieto, Edward@DTSC; Eshaghian, Mike@DTSC
Subject: RE: Exxon Mobil Refinery Torrance, California

Phil, sorry, this site is not familiar and I do not have any more information about this.

Peter

From: Blum, Phil@DTSC
Sent: Wednesday, December 09, 2015 5:43 PM
To: Eshaghian, Mike@DTSC; Bailey, Peter@DTSC
Cc: Nieto, Edward@DTSC
Subject: FW: Exxon Mobil Refinery Torrance, California

Greetings.

I have received the following inquiry from Maria Soria, see below.

Does anyone have any more information than shown in Envirostor? There is very little info available.

Does anyone know if there is a facility file, or the location of the facility file?

Thanks!

Phil Blum

Supervisor

Permitting Division, Chatsworth

818.717.6694

From: Soria, Maria@DTSC
Sent: Wednesday, December 09, 2015 4:59 PM
To: Blum, Phil@DTSC
Subject: FW: Exxon Mobil Refinery Torrance, California

Hi Phil. Can you confirm the history as written below? Thanks.

From: Lin, Sharon [mailto:Lin.Sharon@epa.gov]
Sent: Wednesday, December 09, 2015 2:10 PM
To: Soria, Maria@DTSC
Cc: Schofield, John; Gross, Barbara; McDaniel, Doug
Subject: Exxon Mobil Refinery Torrance, California

I received an inquiry on the Exxon Mobil Refinery in Torrance from EPA HQ/OECA. Would you please confirm the facility has been a LQG and the permitting history in the Envirostor (see below) is correct? If you have previous inspection reports, that would be great too. Thanks!

sharon

http://www.envirostor.dtsc.ca.gov/public/profile_report.asp?global_id=80001569

File Edit View Favorites Tools Help

EXXON MOBIL OIL CORP (80001569)

3700 W 190TH ST
TORRANCE, CA 905040000
LOS ANGELES COUNTY
SITE TYPE: CORRECTIVE ACTION

Summary | Activities | Sub-Areas | Map

Site Information

CLEANUP STATUS
REFER: RWQCB AS OF 1/1/2008

SITE TYPE: CORRECTIVE ACTION
NATIONAL PRIORITIES LIST: NO
ACRES: 0 ACRES
APN: 7352002023
CLEANUP OVERSIGHT AGENCIES:
RWQCB

Regulatory Profile

PAST USE(S) THAT CAUSED CONTAMINATION
NONE SPECIFIED

POTENTIAL CONTAMINANTS OF CONCERN
NONE SPECIFIED

Site History

It is difficult to piece together the permitting history of the ExxonMobil due to a long history going back to the early 198

1. In 1980, ExxonMobil submitted a Part A permit application to USEPA. Consequently, ExxonMobil received an inter
Tanks; 2) Oily Water System(includes API separators, stilling tanks, wastewater tanks, gas flotation units, and recove
Note: It is difficult to decipher the units specified in original (1980) Part A. The unit breakdown described here was pro

2. In 1982, ExxonMobil submitted a revised Part A to USEPA removing three units (Demineralization Neutralization ta
submitted a letter to ExxonMobil stating they've incorporated the changes in the Part A.

3. In 1985, ExxonMobil again submitted a revised Part A to USEPA removing the remaining three units (Spent Causti
applicable regulatory/statutory exemptions. ExxonMobil also submitted variance applications to DTSC for the Demine
only, there was no confirmation from either the State or Federal agencies.

4. Due to never receiving a formal confirmation from USEPA or DTSC regarding their status, it appears ExxonMobil c
for the six units in interim status after 1988.

5. In 1995, ExxonMobil received Tiered Permitting, Conditional Authorization and Conditional Exemption for two units

ExxonMobil never received a Part B facility permit from DTSC or USEPA. Additionally, it appears none of the original

For corrective action, the RWQCB is the lead agency for the cleanup and therefore, information regarding the correcti
site. RWQCB has been working on remediation at this site since this time. There also was a document dated 12/16/

Data was updated with information that could be found/deciphered but not very complete.

Sharon Lin, P.E.

U.S. Environmental Protection Agency Region 9

Enforcement Division

Air, Waste and Toxics Branch, ENF-2-2
75 Hawthorne Street

San Francisco, CA 94105

Tel: (415) 972-3446

Email: Lin.Sharon@epa.gov

DEPARTMENT OF TOXIC SUBSTANCES CONTROL

ENVIROSTOR

EXXON MOBIL OIL CORP (CAD008354052)

SIGN UP FOR EMAIL ALERTS

3700 W 190TH ST
TORRANCE, CA 90504
LOS ANGELES COUNTY

MOST RECENT INSPECTOR:
LARRY RAMIREZ

MOST RECENT SUPERVISOR:
DPLAIN@DTSC.CA.GOV

INSPECTION TIMELINE

◆ = Class 1 Violation ◇ = Class 2 Violation ◇ = Minor Violation ◆ = Inspection - No Violations • Colored Circles = Financial Reviews

ENFORCEMENT ACTIONS

ACTIVITY TYPE	ISSUED / COMPLETED DATE
Consent Order with Enforcement and Settlement - Federal CA/FO (385)	1/26/2007
Consent Order with Enforcement and Settlement - Federal CA/FO (385)	6/30/2000

COMPLETED INSPECTIONS

ACTIVITY TYPE	INSP DATE	VIOLATION(S)	RETURN TO COMPLIANCE DATE
Compliance Evaluation Inspection - Generator	6/15/2011	No Violations	
Financial Records Review - Generator	7/20/2010	Class 1, Minor	10/1/2010
Compliance Evaluation Inspection - Generator	3/3/2009	No Violations	
Compliance Evaluation Inspection - Generator	2/20/2008	No Violations	
Financial Records Review - Treatment, Storage and Disposal	5/23/2005	No Violations	
Compliance Evaluation Inspection - Treatment, Storage and Disposal	1/26/2005	No Violations	
Facility Self Disclosure - Treatment, Storage and Disposal	8/6/2003	Class 1	2/15/2007
Compliance Evaluation Inspection - Treatment, Storage and Disposal	4/23/2003	No Violations	
Compliance Evaluation Inspection - Treatment, Storage and Disposal	4/24/2002	No Violations	
Compliance Evaluation Inspection - Treatment, Storage and Disposal	4/24/2001	Minor	4/26/2001
Compliance Evaluation Inspection - Treatment, Storage and Disposal	4/18/2000	Minor	4/18/2000
Compliance Evaluation Inspection - Treatment, Storage and Disposal	6/2/1999	No Violations	
Compliance Evaluation Inspection - Treatment, Storage and Disposal	6/19/1995	Class 2	12/4/1995

Conditions of Use | Privacy Policy

Copyright © 2007 Department of Toxic Substances Control

0.8125 seconds

DEPARTMENT OF TOXIC SUBSTANCES CONTROL

ENVIROSTOR

MOBIL (19290134)

SIGN UP FOR EMAIL ALERTS

3700 WEST 190TH STREET
TORRANCE, CA 90504
LOS ANGELES COUNTY
SITE TYPE: * HISTORICAL

OFFICE: CLEANUP CYPRESS

Site Information

CLEANUP STATUS
REFER: RCRA AS OF 9/27/1996

SITE TYPE: * HISTORICAL		**ENVIROSTOR ID:**	19290134
NATIONAL PRIORITIES LIST: NO		**SITE CODE:**	400098
ACRES: NONE SPECIFIED		**SPECIAL PROGRAM:**	* RCRA 3012 - PAST HAZ WASTE DISP INVEN SITE
APN: NONE SPECIFIED		**FUNDING:**	
CLEANUP OVERSIGHT AGENCIES:		**ASSEMBLY DISTRICT:**	66
NONE SPECIFIED		**SENATE DISTRICT:**	35

Regulatory Profile

PAST USE(S) THAT CAUSED CONTAMINATION
NONE SPECIFIED

POTENTIAL CONTAMINANTS OF CONCERN	**POTENTIAL MEDIA AFFECTED**
UNCATEGORIZED	NONE SPECIFIED

Site History

Completed Activities

DOCUMENT TYPE	DATE COMPLETED	COMMENTS
De-Certification	9/27/1996	DECERTIFICATION. Mobil Oil, Torrance is an active facility. The site was identified as a certification due to an audit performed by the Auditor General's Office. Since the facility is still operating, the site cannot be considered remediated. The site has been deleted from chronological list of certified sites.
Certification	12/31/1985	Site is on the June 30, 1991 Chronological List of Certified Remediated and Delisted Sites as being certified in 1985.
Removal Action Completion Report	12/31/1985	
Preliminary Assessment Report	4/1/1984	SOURCE ACT: REFINERY YR OF OPER: 1929 TO PRESENT ENF HISTORY: 9/16/80 VIO OF CA ADMINI- STRATIVE CODE-USE UNREGISTERED HAULER & FAILURE TO MANIFEST WASTE. PRELIM ASSESS DONE RCRA 3012
* Discovery	1/31/1979	FACILITY IDENTIFIED HMMS/ENF INSPECTION SAMPLE RESULTS HMNS/ENF SAMPLES TAKEN RESULTS ON FILE

Conditions of Use | Privacy Policy

Copyright © 2007 Department of Toxic Substances Control

0.28125 seconds

Activities Report - Maintenance
Go

PERMITTING HOME | MANAGE PROJECTS | REPORTS | SEARCH | LOGOUT

EXXON MOBIL OIL CORP (CAD008354052) - (MAP)

PROTECTIVE FILER

3700 W 190TH ST
TORRANCE , CA 90504
LOS ANGELES COUNTY

PUBLIC PROFILE REPORT

OTHER ENVIROSTOR PROJECTS ASSOCIATED WITH THIS PROJECT:

PROJECT NAME	ADDRESS	CITY	SITE TYPE	STATUS	PROJECT CONTACT
EXXON MOBIL OIL CORP	3700 W 190TH ST	TORRANCE	Corrective Action	Refer: RWQCB	
MOBIL	3700 WEST 190TH STREET	TORRANCE	* Historical	Refer: RCRA	
Mobil Oil, Torrance Refinery	3700 W. 190th Street	Torrance	Tiered Permit	Refer: Other Agency	
EXXON MOBIL OIL CORP	3700 W 190TH ST	TORRANCE	EERP Facility		LARRY RAMIREZ

THIS PROJECT WAS LAST MODIFIED BY ***ADMIN USER*** ON 5/13/2009 - VIEW/UPDATE HISTORY

COMPREHENSIVE FACILITY REPORT

PERMITTING EVENTS

UNIT NAME	UNIT SEQ	DESC	LEG OPER STATUS	CAPACITY	UOM	EFF DATE
OTHRTRT1	1	Determined exempt from RCRA and Tierred Permitting Requirements. No Hazardous Wastes are being stored in tanks.	Delisted - Protective Filer	15,000	Gallons per Day	1/26/2007

EVENT	EVENT DESCRIPTION	OWNER	SEQ	RESP AGENCY	ACT LOC	ACTUAL DATE	SERIES NAME
OP002VE	OP002VE	HQ	2	EPA	CA	5/26/1993	PERMIT1
CL310	Plan Received - Closure	HQ	1	State	CA	11/21/1989	CLOSURE1
CL320	Notice of Deficiency - Closure Plan	US	2	State	CA	11/21/1989	CLOSURE1
OP010	Part B Call-In	HQ	1	State	CA	2/11/1985	PERMIT1
OP001CS	Request for Change under Interim Status	HQ	4	State	CA	1/27/1982	PERMIT1
OP002AP	Approval of Interim Status Change	HQ	3	State	CA	4/6/1981	PERMIT1
OP001IS	Initial Submittal	HQ	1	EPA	CA	11/5/1980	PERMIT1

UNIT NAME	UNIT SEQ	DESC	LEG OPER STATUS	CAPACITY	UOM	EFF DATE
OTHRTRT2	4	Determined exempt from RCRA and Tierred Permitting Requirements. No Hazardous Wastes are being stored in tanks.	Delisted - Protective Filer	42,000	Gallons per Day	1/26/2007

EVENT	EVENT DESCRIPTION	OWNER	SEQ	RESP AGENCY	ACT LOC	ACTUAL DATE	SERIES NAME
OP010	Part B Call-In	HQ	1	State	CA	2/11/1985	PERMIT1
OP002AP	Approval of Interim Status Change	HQ	3	State	CA	4/6/1981	PERMIT1
OP001IS	Initial Submittal	HQ	1	EPA	CA	11/5/1980	PERMIT1

UNIT NAME	UNIT SEQ	DESC	LEG OPER STATUS	CAPACITY	UOM	EFF DATE
TANKSTR1	2	Determined exempt from RCRA and Tierred Permitting Requirements. No Hazardous Wastes are being stored in Tanks.	Delisted - Protective Filer	80,000	Gallons	1/26/2007

EVENT	EVENT DESCRIPTION	OWNER	SEQ	RESP AGENCY	ACT LOC	ACTUAL DATE	SERIES NAME
OP002VE	OP002VE	HQ	2	EPA	CA	5/26/1993	PERMIT1
CL320	Notice of Deficiency - Closure Plan	US	2	State	CA	11/21/1989	CLOSURE1
CL310	Plan Received - Closure	HQ	1	State	CA	11/21/1989	CLOSURE1
OP180LN	OP180LN	US	2	State	CA	9/26/1985	PERMIT1
OP010	Part B Call-In	HQ	1	State	CA	2/11/1985	PERMIT1
OP001CS	Request for Change under Interim Status	HQ	4	State	CA	1/27/1982	PERMIT1
OP002AP	Approval of Interim Status Change	HQ	3	State	CA	4/6/1981	PERMIT1
OP001IS	Initial Submittal	HQ	1	EPA	CA	11/5/1980	PERMIT1

UNIT NAME	UNIT SEQ	DESC	LEG OPER STATUS	CAPACITY	UOM	EFF DATE
TANKTRT1	3	Determined exempt from RCRA and Tierred Permitting Requirements. No Hazardous Wastes are being stored in tanks	Delisted - Protective Filer	300	Gallons per Day	1/26/2007

EVENT	EVENT DESCRIPTION	OWNER	SEQ	RESP AGENCY	ACT LOC	ACTUAL DATE	SERIES NAME
OP002VE	OP002VE	HQ	2	EPA	CA	5/26/1993	PERMIT1
CL310	Plan Received - Closure	HQ	1	State	CA	11/21/1989	CLOSURE1
CL320	Notice of Deficiency - Closure Plan	US	2	State	CA	11/21/1989	CLOSURE1

OP010	Part B Call-In	HQ	1	State	CA	2/11/1985	PERMIT1
OP001CS	Request for Change under Interim Status	HQ	4	State	CA	1/27/1982	PERMIT1
OP002AP	Approval of Interim Status Change	HQ	3	State	CA	4/6/1981	PERMIT1
OP001IS	Initial Submittal	HQ	1	EPA	CA	11/5/1980	PERMIT1

UNIT NAME	UNIT SEQ	DESC	LEG OPER STATUS	CAPACITY	UOM	EFF DATE
TANKTRT2	5	Determined exempt from RCRA and Tierred Permitting Requirements. No Hazardous Wastes are being stored in tanks	Delisted - Protective Filer	650,000	Gallons per Day	1/26/2007

EVENT	EVENT DESCRIPTION	OWNER	SEQ	RESP AGENCY	ACT LOC	ACTUAL DATE	SERIES NAME
OP010	Part B Call-In	HQ	1	State	CA	2/11/1985	PERMIT1
OP002AP	Approval of Interim Status Change	HQ	3	State	CA	4/6/1981	PERMIT1
OP001IS	Initial Submittal	HQ	1	EPA	CA	11/5/1980	PERMIT1

UNIT NAME	UNIT SEQ	DESC	LEG OPER STATUS	CAPACITY	UOM	EFF DATE
TANKTRT3	6	Determined exempt from RCRA and Tierred Permitting Requirements. No Hazardous Wastes are being stored in tanks.	Delisted - Protective Filer	3,600,000	Gallons per Day	1/26/2007

EVENT	EVENT DESCRIPTION	OWNER	SEQ	RESP AGENCY	ACT LOC	ACTUAL DATE	SERIES NAME
OP010	Part B Call-In	HQ	1	State	CA	2/11/1985	PERMIT1
OP002AP	Approval of Interim Status Change	HQ	3	State	CA	4/6/1981	PERMIT1
OP001IS	Initial Submittal	HQ	1	EPA	CA	11/5/1980	PERMIT1

CORRECTIVE ACTION EVENTS

EVENT	EVENT DESCRIPTION	OWNER	SEQ	RESP AGENCY	ACT LOC	ACTUAL DATE	SERIES NAME
CA750YE	RELEASE TO GW CONTROLLED DETERMINATION-YES, APPLICABLE AS OF THIS DATE	HQ	10	State	CA	4/7/2006	ENTIRE FACILITY
CA725YE	HUMAN EXPOSURES CONTROLLED DETERMINATION-YES, APPLICABLE AS OF THIS DATE	HQ	1	State	CA	9/26/2003	ENTIRE FACILITY
CA725NO	HUMAN EXPOSURES CONTROLLED DETERMINATION-FACILITY DOES NOT MEET DEFINITION	HQ	12	EPA	CA	3/9/2001	ENTIRE FACILITY
CA750NO	RELEASE TO GW CONTROLLED DETERMINATION-FACILITY DOES NOT MEET DEFINITION	HQ	13	EPA	CA	3/9/2001	ENTIRE FACILITY
CA210WB	REFERRED TO A NON-RCRA AUTH - WATER BOARD	09	11	State	CA	12/16/1999	ENTIRE FACILITY
CA210WB	REFERRED TO A NON-RCRA AUTH - WATER BOARD	09	10	EPA	CA	11/4/1997	ENTIRE FACILITY
CA225YE	STABILIZATION MEASURES EVALUATION-FACILITY IS AMENABLE TO STABILIZATION	HQ	11	EPA	CA	9/21/1994	ENTIRE FACILITY
CA075HI	CA PRIORITIZATION-HIGH CA PRIORITY	HQ	8	EPA	CA	9/21/1994	ENTIRE FACILITY
CA650	STABILIZATION CONSTRUCTION COMPLETED	HQ	6	State	CA	6/30/1993	ENTIRE FACILITY
CA036WQ	DEFERRAL TO ANOTHER AGENCY--WATER QUALITY BOARD	09	4	EPA	CA	10/31/1991	ENTIRE FACILITY
CA600SR	STABILIZATION MEASURES IMPLEMENTED-PRIMARY MEAS IS SOURCE REMOVL &/OR TRT	HQ	5	State	CA	9/1/1991	ENTIRE FACILITY
CA725NO	HUMAN EXPOSURES CONTROLLED DETERMINATION-FACILITY DOES NOT MEET DEFINITION	HQ	8	State	CA	8/31/1990	ENTIRE FACILITY
CA750YE	RELEASE TO GW CONTROLLED DETERMINATION-YES, APPLICABLE AS OF THIS DATE	HQ	9	State	CA	8/31/1990	ENTIRE FACILITY
CA074HI	NCAPS RANKING/PRIORITY	09	7	EPA	CA	5/21/1990	ENTIRE FACILITY
CA075HI	CA PRIORITIZATION-HIGH CA PRIORITY	HQ	9	EPA	CA	5/21/1990	ENTIRE FACILITY
CA029ST	LEAD AGENCY DETERMINATION-STATE ENVIRONMENTAL AGENCY	09	1	EPA	CA	5/21/1990	ENTIRE FACILITY
CA049RE	PA OR CERCLA INSPECTION-REEVALUATED, NOT A PA PLUS	09	6	EPA	CA	5/21/1990	ENTIRE FACILITY
CA036ST	DEFERRAL TO ANOTHER AGENCY-STATE ENVIRONMENTAL AGENCY	09	3	EPA	CA	4/17/1990	ENTIRE FACILITY
CA049PA	PA OR CERCLA INSPECTION-NOT A PA PLUS	09	5	EPA	CA	4/17/1990	ENTIRE FACILITY
CA210	REFERRED TO NON-RCRA AUTH	US	1	State	CA	2/25/1985	ENTIRE FACILITY, GROUNDWATER
CA100	RCRA FACILITY INVESTIGATION IMPOSITION	HQ	1	State	CA	2/25/1985	ENTIRE FACILITY, GROUNDWATER
CA200		HQ	3	State	CA	10/3/1990	GROUNDWATER

	RCRA FACILITY INVESTIGATION REPORT APPROVED						
CA650	STABILIZATION CONSTRUCTION COMPLETED	HQ	7	State	CA	11/30/1989	GROUNDWATER
CA150	RCRA FACILITY INVESTIGATION WORKPLAN APPROVED	HQ	2	State	CA	5/12/1988	GROUNDWATER
CA600GW	STABILIZATION MEASURES IMPLEMENTED-GROUNDWATER EXTRACTION & TREATMENT	HQ	4	State	CA	2/5/1985	GROUNDWATER

CONTACT PERMITTING HELP

ExxonMobil
Refining & Supply Company
3700 West 190th Street
Torrance, California 90504-2929

ExxonMobil
Refining & Supply

Via Certified Mail/Return Receipt Requested

May 8, 2007

Mario Tresierras - Tiered Permitting Coordinator
Los Angeles County Fire Department
Health Hazardous Materials Division
West District Office
6167 Bristol Pkwy, #220
Culver City, CA 90230

Dear Mr. Tresierras:

Re: Onsite Hazardous Waste Treatment Notification
ExxonMobil Torrance Refinery
New Drum Crusher, UNIT CE2

Enclosed are completed Unified Program (UP) forms for a new hazardous waste treatment unit located at the ExxonMobil Oil Corporation Refinery in Torrance, California. The new unit will crush empty drums prior to recycling. The facility currently operates an additional drum crusher unit under CESW authorization.

Completed forms include the revised Facility Page, a new Unit Page, and a new Waste and Treatment Process Combination page for Conditionally Exempt – Specified Wastestreams (CEWS). A site map and a plot plan are attached to the UP forms.

Should you have any questions or concerns, please contact Elaine Latkovic at (310) 212-4743 or elaine.latkovic@exxonmobil.com.

Very Truly Yours,

Penny Wirsing

Penny Wirsing

c: Robert Kou, California Department of Toxic Substances Control

ExxonMobil
Refining and Supply Company

3700 West 190th Street
Torrance, CA 90509-2929

ExxonMobil
Refining & Supply

Via Certified Mail/Return Receipt Requested March 11, 2005

LA County Fire Department
Health Hazmat Division
SW District Office
24330 Narbone Avenue
Lomita, CA 90717

Attention UP Contact:

Re: Onsite Hazardous Waste Treatment Notification

Attached are completed Unified Program forms for a new hazardous waste treatment unit located at the ExxonMobil Oil Corporation Refinery in Torrance, California.

The attached forms (pages 1 – 4 of 4) include revised Facility and Financial Assurance Pages and new Unit and Waste/Treatment Process Combination pages. Attachments to the UP forms include a site map, a breakdown of estimated closure costs, a summary of prior enforcement history, and a revised Financial Test and Corporate Guarantee.

The new unit will remove selenium from refinery wastewater to meet permit limitations established by the Los Angeles County Sanitation Districts. Construction of the new unit is in progress as of January 2005.

Please contact me at 310-212-1991 if there are any questions concerning this submittal.

Sincerely,

Steve Giffin
Project Development Engineer

cc: Paul Martyn, Los Angeles County Sanitation Districts
Robert Kou, California Department of Toxic Substances Control
DTSC Compliance Division
1101 N. Grandview
Glendale CA 91201

Department of Toxic Substances Control

Alan C. Lloyd, Ph.D.
Agency Secretary
Cal/EPA

8800 Cal Center Drive
Sacramento, California 95826-3200

Arnold Schwarzenegger
Governor

September 22, 2005

Jeffrey I. Butvinik
ExxonMobil Law Department
3225 Gallows Road
Fairfax, VA 22037

RE: ExxonMobil (Docket HWCA 2005 0957)

Dear Mr. Butvinik:

It has been quite some time since Exxon and the Department met to discuss this matter. In the interval, Exxon has provided documentation to the Department regarding its operation and the relevant issues. The Department has likewise been actively examining those materials and other relevant information.

After thorough consideration of Exxon's input and the Department's own research we have determined that there is indeed a violation. There remain, however, some substantial issues concerning the seriousness and the economic benefit of the violation.

We would like to meet with you and your team to discuss these issues and hopefully to reach a resolution of this long standing matter. Due to vacations and other scheduling problems, such a meeting would not be possible until November. Please advise of available dates to meet in Glendale. Please note my new address above and my new telephone number, (916) 255-3647.

Thank you for your patience and cooperation.

Sincerely,

James J. Grace
Staff Counsel
Office of Legal Counsel and Investigations

cc: Florence Gharibian, Chief
Southern California Branch
Statewide Compliance Division
Department of Toxic Substances Control
1011 North Grandview Avenue
Glendale, CA 91201

Printed on Recycled Paper

Roberto Kou, Unit Chief
Statewide Compliance Division
Department of Toxic Substances Control
1011 North Grandview Avenue
Glendale, CA 91201

James R. Potter
Deputy Attorney General
Office of the Attorney General
300 Spring Street
Los Angeles, California 90013

To: Lin, Sharon[Lin.Sharon@epa.gov]; Howe, Chris[Chris.Howe@valero.com]
Cc: Sugerman, Rebecca[Sugerman.Rebecca@epa.gov]; Frazer, Russell[Frazer.Russell@epa.gov]
From: Cuffel, Donald
Sent: Fri 7/31/2015 3:30:10 PM
Subject: RE: Notice of Intent to File a Complaint RCRA/EPCRA - Valero Benicia Refinery

Good morning Sharon,

Thank you for your note below with clear instructions and documentation. We will be in touch if questions arise. Given that today is Friday, July 31, 2015, I suppose that the CD will arrive on Monday August 3, correct? Given that is the first day we will have the benefit of the entire set of documents and files, I presume the 14-day clock begins on August 3rd. Please confirm.

Sincerely,

Don

Donald W. Cuffel

Manager - Environmental Engineering

Valero Refining Company - CA, Benicia Refinery

707 745 7545

From: Lin, Sharon [mailto:Lin.Sharon@epa.gov]
Sent: Friday, July 31, 2015 7:40 AM
To: Howe, Chris; Cuffel, Donald
Cc: Sugerman, Rebecca; Frazer, Russell
Subject: Notice of Intent to File a Complaint RCRA/EPCRA - Valero Benicia Refinery

Dear Mr. Howe and Mr. Cuffel,

The attached letter including a CD report is being transmitted to you via UPS overnight. Because you claimed confidential business information (CBI) for some of the information the

report relied on during EPA's inspection in May 2014, EPA is transmitting the report and the report attachments as CBI. You will find instructions on how to properly handle CBI materials in the package. We are also requesting you to review your existing CBI claim and assert your confidentiality claim **in accordance with the regulations within 14 calendar days of receipt of this letter** (refer to the attached letter). Please let me know if you have any questions. Thanks.

Sharon Lin

U.S. Environmental Protection Agency Region 9

Enforcement Division

Air, Waste and Toxics Branch, ENF-2-2
75 Hawthorne Street

San Francisco, CA 94105

Tel: (415) 972-3446

Email: Lin.Sharon@epa.gov

To: Lin, Sharon[Lin.Sharon@epa.gov]
Cc: Schofield, John[Schofield.John@epa.gov]; michael.monson@shell.com[michael.monson@shell.com]; Rollins, Christopher[Rollins.Christopher@epa.gov]
From: Natalie.Braden@shell.com
Sent: Fri 7/24/2015 5:10:55 PM
Subject: RE: Extension Request for Shell Martinez Refinery

Sharon,

Thank you as well for your quick response and the extension.

Natalie

From: Lin, Sharon [mailto:Lin.Sharon@epa.gov]
Sent: Friday, July 24, 2015 9:26 AM
To: Braden, Natalie A SOPUS-DMW/323
Cc: Schofield, John; Monson, Michael J SOPUS-DMW/323; Rollins, Christopher
Subject: RE: Extension Request for Shell Martinez Refinery

Hi, Natalie,

Your request for a 30 day time extension to respond to EPA RCRA information request is granted. The new due date is August 28, 2015. If you have any questions, please let me know. Thanks.

Sharon

From: Natalie.Braden@shell.com [mailto:Natalie.Braden@shell.com]
Sent: Friday, July 24, 2015 8:16 AM
To: Lin, Sharon
Cc: Schofield, John; michael.monson@shell.com
Subject: Extension Request for Shell Martinez Refinery

Ms. Lin,

We are working through the EPA Request for Information you sent us and that we received in this office on June 29, 2015. While we have been able to make progress on this request, our progress on completing it has been (and will continue to be) slowed due to the high number of pre-scheduled summer vacations, an extended national wide Shell oil spill drill being hosted locally by the Martinez Refinery, and a 2nd EPA Request for Information received shortly after this one that requires the same resources as your request. Therefore, I am requesting an extension of 30 days from the original due date of July 29th, 2015. Please let me know if this extension will be granted and thank you for considering my request.

Regards,

Natalie

Natalie Braden
Environmental Affairs Manager - Shell Martinez Refinery
Shell Martinez Refinery, 3485 Pacheco Blvd, Martinez CA 94553
Tel: +1 925-313-3705 **Email:** natalie.braden@shell.com

To: Natalie.Braden@shell.com[Natalie.Braden@shell.com]
Cc: Schofield, John[Schofield.John@epa.gov]; michael.monson@shell.com[michael.monson@shell.com]; Lin, Sharon[Lin.Sharon@epa.gov]
From: Rollins, Christopher
Sent: Fri 7/24/2015 3:58:31 PM
Subject: RE: Extension Request for the Shell Martinez Refinery

Natalie,

EPA hereby grants Shell a 30 day extension from the August 6, 2015 due date, in order to respond to EPA R9's PCB Information Request Letter.

c

Christopher Rollins

U.S. Environmental Protection Agency

75 Hawthorne Street (ENF-2-2)

San Francisco, CA 94105

Phone: (415) 947-4166

Fax: (415) 947-3579

rollins.christopher@epa.gov

From: Natalie.Braden@shell.com [mailto:Natalie.Braden@shell.com]
Sent: Friday, July 24, 2015 8:20 AM
To: Rollins, Christopher
Cc: Schofield, John; michael.monson@shell.com
Subject: Extension Request for the Shell Martinez Refinery

Mr. Rollins,

We have received in this office on July 7, 2015 the United States Environmental Protection Agency, Region 9's letter seeking additional information following the March 23, 2015 through March 30, 2015 compliance evaluation inspection. I understand you are looking for a response within thirty (30) calendar days from the day we received the letter which, based on my calculation, would be August 6, 2015. We have reviewed the information request, and I am requesting an extension of 30 days from the original due date of August 6th, 2015 due to the high number of pre-scheduled summer vacations, an extended national wide Shell oil spill drill being hosted by the Martinez Refinery, and a 2nd EPA Request for Information received shortly before this one that requires the same resources as your request. Please let me know if this extension will be granted and thank you for considering my request.

Regards,

Natalie

Natalie Braden
Environmental Affairs Manager - Shell Martinez Refinery
Shell Martinez Refinery, 3485 Pacheco Blvd, Martinez CA 94553
Tel: +1 925-313-3705 **Email:** natalie.braden@shell.com

To: Lin, Sharon[Lin.Sharon@epa.gov]
From: Ripp, Thomas
Sent: Mon 7/17/2017 2:09:23 PM
Subject: Re: FYI - RCRA inspection findings at Torrance Refinery

Thanks. Please give me a call at home.

Tom Ripp
Pesticides, Waste and Toxics Branch
202-564-7003 office
301-391-6198 alternate location
M - 7:30 - 4:00 alternate location
Tu - 6:45 - 4:15 in the office
W - 6:45 - 5:15 in the office
Th - 10:00 - 1:00 alternate location
F - Do not work

From: Lin, Sharon
Sent: Friday, July 14, 2017 6:22 PM
To: Ripp, Thomas
Subject: FYI - RCRA inspection findings at Torrance Refinery

Hi, Tom,

Just FYI. EPA's findings from the process based inspection that I conducted in December 2016 at PBF Energy Torrance refinery were referred to the state to follow up as they see appropriate in April and now the state is planning to pass on the follow up to the county fire department. I am attaching the reports from EPA's process based inspection and the fire department routine hazardous waste generator (LQG) inspection at the Torrance refinery. It is not surprising that a check list type of hazardous waste generator inspection at a refinery doesn't yield many meaningful findings.

Here is Susan Bodine's statement during her confirmation hearing in front of the senate panel reported in today's Inside EPA.

"She also defended a continued strong role for OECA. "I believe that OECA plays an important role in maintaining a level regulatory playing field by ensuring states enforce the federal laws that they are authorized to carry out," said Bodine in response to one query by Sen. Ed Markey (D-MA). "That can include taking action in the absence of state action."

Sharon

To: Lin, Sharon[Lin.Sharon@epa.gov]
From: Ripp, Thomas
Sent: Fri 12/11/2015 12:24:51 AM
Subject: Re: Info - Exxon Mobil Refinery in Torrance

Thanks for the information. Does the CA indicate where the groundwater contamination is coming from? Storage tanks? Wastewater collection system? Surface impoundments? Is this a case where they believe it is easier to let contamination go on while they pump and treat rather than fixing the problem? Seems like it is worthy of an EPA inspection.

Tom Ripp
Pesticides, Waste and Toxics Branch
202-564-7003 (Tu & W) 6:45 - 4:15
301-391-6198 (M alternate location) 9:00 - 2:30
Do not work Thursday or Friday

From: Lin, Sharon
Sent: Wednesday, December 9, 2015 7:24 PM
To: Ripp, Thomas
Subject: Info - Exxon Mobil Refinery in Torrance

Here is what I found in RCRA-Info for the CEI dates for the subject facility in the past 5 years.

6/15/11

7/22/09

6/15/09

6/12/09

6/8/09

6/1/09

3/3/09

2/20/08

1/26/05

Corrective Action Status:

Corrective Action consent agreement was in place in 1985. Groundwater migration is under control; human exposures under control; EPA plans to evaluate the remedy construction goal of the Corrective Action this FY.

The facility was an interim TSD at one point. Please see below for the site background on the California DTSC Envirostor (public website).

http://www.envirostor.dtsc.ca.gov/public/profile_report.asp?global_id=80001569

File Edit View Favorites Tools Help

EXXON MOBIL OIL CORP (80001569)

3700 W 190TH ST
TORRANCE, CA 905040000
LOS ANGELES COUNTY
SITE TYPE: CORRECTIVE ACTION

Summary | Activities | Sub-Areas | Map

Site Information

CLEANUP STATUS
REFER: RWQCB AS OF 1/1/2008

SITE TYPE: CORRECTIVE ACTION
NATIONAL PRIORITIES LIST: NO
ACRES: 0 ACRES
APN: 7352002023
CLEANUP OVERSIGHT AGENCIES:
RWQCB

Regulatory Profile

PAST USE(S) THAT CAUSED CONTAMINATION
NONE SPECIFIED

POTENTIAL CONTAMINANTS OF CONCERN
NONE SPECIFIED

Site History

It is difficult to piece together the permitting history of the ExxonMobil due to a long history going back to the early 198

1. In 1980, ExxonMobil submitted a Part A permit application to USEPA. Consequently, ExxonMobil received an inter
Tanks; 2) Oily Water System(includes API separators, stilling tanks, wastewater tanks, gas flotation units, and recove
Note: It is difficult to decipher the units specified in original (1980) Part A. The unit breakdown described here was pro

2. In 1982, ExxonMobil submitted a revised Part A to USEPA removing three units (Demineralization Neutralization ta
submitted a letter to ExxonMobil stating they've incorporated the changes in the Part A.

3. In 1985, ExxonMobil again submitted a revised Part A to USEPA removing the remaining three units (Spent Causti
applicable regulatory/statutory exemptions. ExxonMobil also submitted variance applications to DTSC for the Demine
only, there was no confirmation from either the State or Federal agencies.

4. Due to never receiving a formal confirmation from USEPA or DTSC regarding their status, it appears ExxonMobil c
for the six units in interim status after 1988.

5. In 1995, ExxonMobil received Tiered Permitting, Conditional Authorization and Conditional Exemption for two units

ExxonMobil never received a Part B facility permit from DTSC or USEPA. Additionally, it appears none of the original

For corrective action, the RWQCB is the lead agency for the cleanup and therefore, information regarding the correcti
site. RWQCB has been working on remedication at this site since this time. There also was a document dated 12/16/

Data was updated with information that could be found/deciphered but not very complete.

Sharon Lin, P.E.

U.S. Environmental Protection Agency Region 9

Enforcement Division

Air, Waste and Toxics Branch, ENF-2-2
75 Hawthorne Street

San Francisco, CA 94105

Tel: (415) 972-3446

Email: Lin.Sharon@epa.gov

To: Lin, Sharon[Lin.Sharon@epa.gov]
Cc: Schofield, John[Schofield.John@epa.gov]; Gross, Barbara[Gross.Barbara@epa.gov]; McDaniel, Doug[McDaniel.Doug@epa.gov]
From: Soria, Maria@DTSC
Sent: Wed 12/9/2015 11:49:37 PM
Subject: RE: Exxon Mobil Refinery Torrance, California

Hi Sharon. We'll do our best to get you the inspection reports for 2008 and 2009 by this Friday and the other information you requested. The reports are in the Clovis office. The 2011 inspection report is uploaded in Envirostor and available for public viewing.

Yes, Exxon is an LQG as noted from information in our hazardous waste tracking system:

RCRA Code	*Description*	*Weight (in Tons)*					
		2010	**2011**	**2012**	**2013**	**2014**	**2015**
	TOTALS	**2,603.15190**	**2,288.64246**	**2,232.91356**	**584.28505**	**506.25008**	**81.6750**
D001	Ignitable	2.40100	2.34250	2.00500	2.65000	35.72000	19.5100
D002	Corrosives	1,656.16490	912.67250	671.21750	317.62500	79.17500	1.02500
D003	Reactivity	0.03150	0.00250				53.9100
D004	Arsenic	0.00250					
D005	Barium		0.00500	0.01250			
D007	Chromium	6.65250	32.84500		0.07550		
D008	Lead	372.52750	10.88000	4.96500	15.14000	13.17500	6.33000
D009	Mercury	0.00250	0.13000		0.09000		
D010	Selenium	0.00750	131.46000	336.33000		54.22000	
D011	Silver	0.20750	0.13000	0.01200	0.18000	0.00500	
D018	Benzene	78.34540	65.32400	40.23600	202.66200		
F002	Halogenated solvents					1.80000	
F003	Non-halogenated solvents	0.17000	0.02000		0.06250	1.21500	
F005	Non-halogenated solvents	0.60000	0.62500		4.80000		

F037	Petroleum refinery primary oil/water/solids separation sludge	66.13000	21.34000	3.00000	2.25000	0.25000	0.90000
K050	Heat exchanger bundle cleaning sludge from petroleum refining industry	1.00000	9.50000	3.60000	0.25000		
K171	Spent Hydrotreating catalyst from petroleum refining operations	418.9100	99.90000	171.5300	38.50000	320.69000	
P098	Potassium cyanide		0.00250				
PCB12	Unknown		1.46346				
U188	Phenol			0.00500			
	TOTALS	**2,603.1515**	**10,288.6424**	**6,232.9136**	**664.2850**	**606.2500**	**61.6750**

From: Lin, Sharon [mailto:Lin.Sharon@epa.gov]
Sent: Wednesday, December 09, 2015 2:10 PM
To: Soria, Maria@DTSC
Cc: Schofield, John; Gross, Barbara; McDaniel, Doug
Subject: Exxon Mobil Refinery Torrance, California

I received an inquiry on the Exxon Mobil Refinery in Torrance from EPA HQ/OECA. Would you please confirm the facility has been a LQG and the permitting history in the Envirostor (see below) is correct? If you have previous inspection reports, that would be great too. Thanks!

sharon

http://www.envirostor.dtsc.ca.gov/public/profile_report.asp?global_id=80001569

File Edit View Favorites Tools Help

EXXON MOBIL OIL CORP (80001569)

3700 W 190TH ST
TORRANCE, CA 905040000
LOS ANGELES COUNTY
SITE TYPE: CORRECTIVE ACTION

Summary | Activities | Sub-Areas | Map

Site Information

CLEANUP STATUS
REFER: RWQCB AS OF 1/1/2008

SITE TYPE: CORRECTIVE ACTION
NATIONAL PRIORITIES LIST: NO
ACRES: 0 ACRES
APN: 7352002023
CLEANUP OVERSIGHT AGENCIES:
RWQCB

Regulatory Profile

PAST USE(S) THAT CAUSED CONTAMINATION
NONE SPECIFIED

POTENTIAL CONTAMINANTS OF CONCERN
NONE SPECIFIED

Site History

It is difficult to piece together the permitting history of the ExxonMobil due to a long history going back to the early 198

1. In 1980, ExxonMobil submitted a Part A permit application to USEPA. Consequently, ExxonMobil received an inter
Tanks; 2) Oily Water System(includes API separators, stilling tanks, wastewater tanks, gas flotation units, and recove
Note: It is difficult to decipher the units specified in original (1980) Part A. The unit breakdown described here was pro

2. In 1982, ExxonMobil submitted a revised Part A to USEPA removing three units (Demineralization Neutralization ta
submitted a letter to ExxonMobil stating they've incorporated the changes in the Part A.

3. In 1985, ExxonMobil again submitted a revised Part A to USEPA removing the remaining three units (Spent Causti
applicable regulatory/statutory exemptions. ExxonMobil also submitted variance applications to DTSC for the Demine
only, there was no confirmation from either the State or Federal agencies.

4. Due to never receiving a formal confirmation from USEPA or DTSC regarding their status, it appears ExxonMobil c
for the six units in interim status after 1988.

5. In 1995, ExxonMobil received Tiered Permitting, Conditional Authorization and Conditional Exemption for two units

ExxonMobil never received a Part B facility permit from DTSC or USEPA. Additionally, it appears none of the original

For corrective action, the RWQCB is the lead agency for the cleanup and therefore, information regarding the correcti
site. RWQCB has been working on remedication at this site since this time. There also was a document dated 12/16/

Data was updated with information that could be found/deciphered but not very complete.

Sharon Lin, P.E.

U.S. Environmental Protection Agency Region 9

Enforcement Division

Air, Waste and Toxics Branch, ENF-2-2
75 Hawthorne Street

San Francisco, CA 94105

Tel: (415) 972-3446

Email: Lin.Sharon@epa.gov

To: Lin, Sharon[Lin.Sharon@epa.gov]
Cc: gordon.johnson@shell.com[gordon.johnson@shell.com]; michael.monson@shell.com[michael.monson@shell.com]
From: michael.monson@shell.com
Sent: Tue 3/15/2016 10:40:52 PM
Subject: ETP-1 Feed Analytical Reports

Sharon,

Got your voicemail. Will the last 3 years of reports be adequate? How soon do you need them?

Michael Monson

Staff Engineer - Environmental

Martinez Refinery, 3485 Pacheco Blvd, Martinez CA 94553

Phone: 925-313-5516

Email: michael.monson@shell.com

Internet: http://www.shelloilproductsus.com/

To: Lin, Sharon[Lin.Sharon@epa.gov]
From: Arora, Asha@DTSC
Sent: Fri 8/21/2015 9:55:43 PM
Subject: FW: Shell Martinez Refinery tiered permitting inspection - Thanks for the opportunity

Hi Sharon,

Thank you so much your kind words. I enjoyed working with you a lot and hope that we have more opportunities to work together.

BTW, I also learned from you. Thank you so much for providing reference and training materials to me.

My work cellphone is not working as there is humming noise in my cellphone. I can still get emails on my cellphone.

Thank again
Asha

From: Peebler, Diana@DTSC
Sent: Friday, August 21, 2015 2:17 PM
To: Lin, Sharon
Cc: Arora, Asha@DTSC; Soria, Maria@DTSC
Subject: RE: Shell Martinez Refinery tiered permitting inspection - Thanks for the opportunity

Thank you Sharon, for the kind words regarding Asha. Yes, she is very knowledgeable and we are lucky to have her! We look forward to continued good working relationships with you and your staff.

Thanks

Diana

Diana Peebler, REHS

Senior Environmental Scientist (Sup)

CA Dept. of Toxic Substances Control

Hazardous Waste Management Program

Enforcement and Emergency Response Division

(510) 540-3866

From: Lin, Sharon [mailto:Lin.Sharon@epa.gov]
Sent: Monday, August 17, 2015 6:35 AM
To: Soria, Maria@DTSC; Peebler, Diana@DTSC
Cc: McDaniel, Doug; Schofield, John
Subject: Shell Martinez Refinery tiered permitting inspection - Thanks for the opportunity

Hi, Diana and Maria,

I had the pleasure of shadowing your staff, Asha Arora, for the tiered permitting technical review/inspection portion of the hazardous wastes compliance evaluation at the Shell Martinez Refinery in early August. I am truly impressed with her technical knowledge and the thoroughness of her inspection and inspection preparation. I have been with the EPA RCRA enforcement program for about two years and this was my first OJT opportunity with a DTSC technical expert. Asha discovered a couple of issues that were overlooked during our inspection in late March because of her thoroughness in her approach to a process based inspection. I hope there will be future opportunities for me to work with Asha.

BTW, EPA National Enforcement Investigations Center was at Shell Puget Sound Refinery last week and this week for a multi-media (including RCRA) process based inspection at EPA Region 10 (Pacific Northwest Region) and the state's request. As our national program is re-focusing on the large complex facilities such as the petro refineries, we are looking forward to more collaborative opportunities with the state inspectors at DTSC.

Sharon Lin, P.E.

U.S. Environmental Protection Agency Region 9

Enforcement Division

Air, Waste and Toxics Branch, ENF-2-2
75 Hawthorne Street

San Francisco, CA 94105

Tel: (415) 972-3446

Email: Lin.Sharon@epa.gov

To: smorioka@hsd.cccounty.us[smorioka@hsd.cccounty.us]
Cc: Schofield, John[Schofield.John@epa.gov]; Lin, Sharon[Lin.Sharon@epa.gov]; Soria, Maria@DTSC[Maria.Soria@dtsc.ca.gov]; Yang, Teng@DTSC[Teng.Yang@dtsc.ca.gov]; Ramirez, Larry@DTSC[Larry.Ramirez@dtsc.ca.gov]; Young, LeeAnn@DTSC[LeeAnn.Young@dtsc.ca.gov]; Easley, Robert@DTSC[Robert.Easley@dtsc.ca.gov]; Robison, Rick@DTSC[Rick.Robison@dtsc.ca.gov]
From: Lynch, Philip@DTSC
Sent: Mon 3/16/2015 3:28:57 PM
Subject: Shell Martinez Inspection - Confidential

Good morning Steve,

This is a message notifying you of an upcoming inspection at the Shell Martinez Refinery in Martinez, CA.

I'd like to request that you keep this inspection information strictly confidential and inform your staff that may be attending the inspection of these instructions. It's USEPAs and DTSC's standard procedure to conduct unannounced inspections.

We plan to begin the inspection beginning on Monday March 23rd and plan to be there at least a week. USEPA will be the lead agency conducting the RCRA portion of the inspection. DTSC will be accompanying USEPA but will be inspecting California Hazardous Waste requirements.

We would like to invite CUPA to accompany USEPA and DTSC on this inspection. However, DTSCs current policy is to request that CUPA staff not conduct a CUPA inspection during this time. I would appreciate your understanding regarding this request.

I will attempt to call you this morning to discuss any questions you may have.

If there are others in your department that should be notified, please forward this email to them.

Thank you,

Dan Lynch

Senior Environmental Scientist (Supervisor)

Enforcement and Emergency Response

Department of Toxic Substances Control

1515 Tollhouse Road

Clovis, California 93611

Ph: (559) 297-3955

Cell: (559) 765-9787

Internet: plynch@dtsc.ca.gov

To: Lin, Sharon[Lin.Sharon@epa.gov]; Arora, Asha@DTSC[Asha.Arora@dtsc.ca.gov]
From: Yang, Teng@DTSC
Sent: Mon 11/30/2015 4:51:06 PM
Subject: RE: draft shell martinez refinery CEI report for your review

I think DTSC would definitely be interested in this "temporary unit".

Asha- Your thoughts?

-Andy

From: Lin, Sharon [mailto:Lin.Sharon@epa.gov]
Sent: Friday, November 27, 2015 8:00 AM
To: Yang, Teng@DTSC; Arora, Asha@DTSC
Cc: Schofield, John
Subject: draft shell martinez refinery CEI report for your review

Hi, Andy and Asha,

Hope you had a great Thanksgiving. I just shared the draft report and appendices via EPA sharepoint with you. Please let me know if you have problem accessing it. Please note this is a staff draft (our attorney has not reviewed it yet) and enforcement confidential. Please do not share beyond your team.

One item that I would like to raise to your attention is the issue of the 3 phase oil/water/solids physical separation temporary unit at the WWTP plant during our March inspection. The solids were hauled off as F037/F038 to a hazardous waste landfill in Canada. Brock Nethery, Clean Harbors onsite project manager, indicated the material that he was processing came from the diversion tank clean out, a temporary project. When Asha and I were on site in August, this temporary separation unit was not there. Would DTSC be concerned that this unit was processing hazardous wastes? (Unless you folks think the material is excluded and/or exempted.).

Sharon

To: Lin, Sharon[Lin.Sharon@epa.gov]
From: Stuber, Robyn
Sent: Mon 6/29/2015 5:44:55 PM
Subject: FW: Tentative Order to reissue NPDES Permit No. CA0005550
Valero Public Notice vFinal.pdf
Valero TO vFinal.pdf
Valero TO Transmittal vFinal-signed.pdf

Robyn A. Stuber ● (415) 972-3524

U.S. EPA Region 9 ● NPDES Permits Section (WTR-2-3)

75 Hawthorne Street ● San Francisco, CA 94105

From: Madigan, John@Waterboards [mailto:John.Madigan@waterboards.ca.gov]
Sent: Monday, June 08, 2015 1:47 PM
To: Ronan, Kimberly A (Kim.Ronan@valero.com)
Cc: Wolfe, Bruce@Waterboards; Austin, Tamarin@Waterboards; Stuber, Robyn; Johnson, Bill@Waterboards; Tang, Lila@Waterboards; Isorena, Philip@Waterboards
Subject: Tentative Order to reissue NPDES Permit No. CA0005550

Hello Kimberly,

A tentative order that would reissue the subject permit, transmittal letter, and public notice are attached. Please confirm receipt and contact me with any questions.

Thanks,

John H. Madigan, P.E.

Water Resources Control Engineer

San Francisco Bay Regional Water Quality Control Board

1515 Clay Street, Suite 1400

Oakland, CA 9412

Phone (510) 622-2405

Fax (510) 622-2460

To: Lin, Sharon[Lin.Sharon@epa.gov]
From: Yang, Teng@DTSC
Sent: Tue 6/23/2015 4:24:08 PM
Subject: RE: Draft Shell Martinez Refinery 3007 Info Request Letter
201505_Shell-Martinez_3007_Draft_Revision 1.doc

I'm sorry Sharon. I got carried away with another assignment and didn't get to finish my review.

I did find two minor errors. Please see the attachment for my corrections. I used the markup program so my edits are in red.

Good job!

-Andy

From: Lin, Sharon [mailto:Lin.Sharon@epa.gov]
Sent: Tuesday, June 23, 2015 9:18 AM
To: Yang, Teng@DTSC
Subject: FW: Draft Shell Martinez Refinery 3007 Info Request Letter

Hi, Andy, does DTSC have any comments on the attached draft? we plan to finalize it today.
thanks.

sharon

From: Lin, Sharon
Sent: Wednesday, June 17, 2015 4:46 PM
To: 'Yang, Teng@DTSC'
Cc: 'Arora, Asha@DTSC'; Schofield, John
Subject: Draft Shell Martinez Refinery 3007 Info Request Letter

Hi, Andy,

Attached is the draft 3007 information request. Please review and comment by this Friday if possible. Please let me know if you have any questions.

Ccing Asha since she is coming out with us the first of August to Shell. The draft sampling plan is going through internal review. I hope it will be ready by the end of June. We will share it with DTSC when it is ready. Thanks!

Sharon Lin, P.E.

U.S. Environmental Protection Agency Region 9

Enforcement Division

Air, Waste and Toxics Branch, ENF-2-2
75 Hawthorne Street

San Francisco, CA 94105

Tel: (415) 972-3446

Email: Lin.Sharon@epa.gov

To: Lin, Sharon[Lin.Sharon@epa.gov]; Peebler, Diana@DTSC[Diana.Peebler@dtsc.ca.gov]
Cc: Schofield, John[Schofield.John@epa.gov]; McDaniel, Doug[McDaniel.Doug@epa.gov]
From: Soria, Maria@DTSC
Sent: Thur 8/3/2017 2:49:49 AM
Subject: RE: Chevron Richmond Refinery RCRA Inspection - EPA assistance

Hi Sharon. Good to hear from you.

The Chevron Richmond Refinery (CAD009114919) was inspected on March 21, 2017.

The Chevron Chemical Company (CAD043237486) was inspected on November 11, 2016.

There are no plans to inspect either facility in the 17/18 state fiscal year.

We will however be inspecting the following refineries and you are more than welcome to participate:

- Tesoro Carson Refinery – Post Closure Permit
- Shell Martinez – undergoing closure
- Phillips 66 Refinery Carson
- Santa Maria Refinery– dba Greka
- Golden Eagle Refinery Martinez – Post Closure Permit
- Valero Wilmington

From: Lin, Sharon [mailto:Lin.Sharon@epa.gov]
Sent: Wednesday, August 02, 2017 12:24 PM
To: Soria, Maria@DTSC <Maria.Soria@dtsc.ca.gov>; Peebler, Diana@DTSC <Diana.Peebler@dtsc.ca.gov>
Cc: Schofield, John <Schofield.John@epa.gov>; McDaniel, Doug <McDaniel.Doug@epa.gov>
Subject: Chevron Richmond Refinery RCRA Inspection - EPA assistance

Hi, Maria and Diana,

Hope you are having a great summer. I am interested in assisting the DTSC inspector for his (her) inspection at Chevron Richmond Refinery if appropriate and convenient. I look forward to learning about the facility and learning from the DTSC inspector colleague(s) in the field. Thanks in advance for your consideration.

Sharon

To: Lin, Sharon[Lin.Sharon@epa.gov]
Cc: Cruz, Amanda[cruz.amanda@epa.gov]
From: Ward, Scott@DTSC
Sent: Mon 7/31/2017 9:35:09 PM
Subject: Shell question - CUPA inspection from 2-28-17
2017-2-28 Contra Costa County CUPA Inspection Report of Shell Refinery (Contra Costa County).pdf
2017-3-22 Response to Contra Costa County Inspection of Shell Refinery (Contra Costa County).pdf

Hi Sharon,

Thank you for the emails containing additional information on Shell Martinez. I am side tracked on other work the next few days, but over course of the next week, I will read through the items you and Amanda shared last Friday and today, and I will follow up with you all as appropriate so I ensure full understand.

I also have one question I am hoping you can help with? I received a copy of some recent inspection reports of Shell which were completed by Contra Costa County Hazardous Materials Program (DTSC's CUPA agent). In reviewing one inspection report dated Feb 28, 2017, the CUPA noted a potential violation arising from a non-existent hazardous waste determination for a tank identified as V18259. The CUPA noted in their inspection report that Shell has completed no hazardous waste determinations for this tank, and that Shell must complete a waste determination by May 15 of 2017. In a follow up inspection report dated March 22, 2017, Shell provided response; and in that response, Shell appears to have requested to discontinue the discussion on this issue with the Contra Costa County Hazardous Materials Program, and resolve the discussion with USEPA. The Contra Costa County Hazardous Materials Program appears to have agreed to this request. My question is if you are aware of Shell engaging in the resolution of this potential violation with USEPA?

Both inspection reports I am referring to are attached. Could you please take a moment to open these two attached files to reference the information I have mentioned? Each document is quite short and I have highlighting and made comments in the PDFs for ease of finding the specific text I am discussing.

Thank you,

Scott

(510) 540-3914

CONTRA COSTA HEALTH SERVICES

Contra Costa Health Services / Hazardous Materials Programs
4585 Pacheco Boulevard, Suite 100, Martinez, CA 94553
Telephone (925) 335-3200 FAX (925) 646-2073
WWW.CCHEALTH.ORG/GROUPS/HAZMAT
WILLIAM B. WALKER, M.D., HEALTH SERVICES DIRECTOR • RANDALL L. SAWYER, DIRECTOR

Hazardous Waste Inspection/Compliance Checklist (page 1 of 2)

FACILITY NAME	SITE ID	INSPECTION DATE
Shell Martinez Refinery	729718	2/28 - 3/2/2017

INSPECTION TYPE	VIOLATION CLASSIFICATIONS	EPA ID
Routine	M = Minor ☐ CI I = Major ☐ CI II = Medium / Repeat Minor ☐	CAD009164021

California Code of Regulations (CCR), Title 22, Division 4.5, Chapter 10, §66001 et al
California Health and Safety Code (HSC), Division 20, Chapter 6.5, §25100 et al
Code of Federal Regulations (CFR) Title 40, Chapter 1, Part 260 et al

Disposal Documents Reviewed For Year:	HW Gen Rpt Form On File?	Total Annual Tonnage of All Hazardous Waste Generated:
2016	☑ Yes ☐ No	

CA State Waste Code if applicable, Federal Code(s)	Hazardous Waste Stream	Annual Quantity (Tons)
	Additional Wastes on Continuation Sheet? ☐ Yes ☐ No	

Generator Status:
☑ RCRA-LQG > 1,000 kg/month ☐ CA-LQG > 1,000 kg/month ☐ CA-SQG > 100 to < 1,000 kg/month ☐ CA-CESQG < 100 kg/month ☐ Episodic

Viol Code	Authority SQG Via CCR 22 66262.34	Authority LQG	GENERAL REQUIREMENTS	Viol Class.	Violation Due Date/ Violation Corrected
HW01	HSC 25189.5	HSC 25189.5	Disposal, treatment or storage at unauthorized location		
HW02	CCR 22 66262.11	CCR 22 66262.11	Hazardous Waste Determination	II	5/15/2017
HW03	CCR 22 66262.12	CCR 22 66262.12	Obtain & maintain a valid EPA ID Number (DTSC Form 1358)		
HW04	CFR 262.34(d)	—	Accumulation time may not exceed 180 days (Unless waste shipped 200 or more miles, no more than 270 days)		
HW05	—	CCR 22 66262.34(a)	Accumulation time may not exceed 90 days		
HW06	CCR 22 67450.1	CCR 22 67450.1	Notify CUPA for eligible onsite treatment.		
HW07	HSC 25163(a)	HSC 25163(a)	Lawful transportation of hazardous waste		
			RECORDKEEPING & REPORTING		
HW08	CCR 22 66262.20	CCR 22 66262.20	Properly Complete Manifest		
HW09	CCR 22 66262.23	CCR 22 66262.23	Send manifest copy to DTSC, P.O. Box 400, Sacramento, CA 95812		
HW10	HSC 25160.2	HSC 25160.2	Properly complete consolidated manifest		
HW11	CCR 22 66262.40	CCR 22 66262.40	Keep waste manifests and/or consolidated manifests for 3 years		
HW12	—	CCR 22 66262.40-41	Biennial Report (RCRA LQG Only)		
HW13	HSC 25123.3	CCR 22 66262.42	File manifest Exception Report with DTSC		
HW14	HSC 25143.10	HSC 25143.10	Biennial Excluded Recyclable Materials Report		
HW15	HSC 25143.2(f) & CCR 22 66261.2(g)	HSC 25143.2(f) & CCR 22 66261.2(g)	Maintain adequate records demonstrating claim of exemption for Excluded Recyclable Material		
HW16	CCR 22 66262.40(c)	CCR 22 66262.40(c)	Keep copies of analytical results, waste analysis records, or waste determination results for 3 years		
HW17	CCR 22 66266.130(c)(5)	CCR 22 66266.130(c)(5)	Keep disposal receipts for 3 years for drained used oil filters and/or drained fuel filters		
HW18	—	CCR 22 67100.1	SB14 – Hazardous Waste Source Reduction Evaluation Review Plan		
			HAZARDOUS WASTE HANDLER TRAINING		
HW19	40 CFR 262.34(d)(5)(iii)	CCR 22 66265.16	Employee training program adequate.		
HW20	—	CCR 22 66265.16	Training Documentation		
HW21	—	CCR 22 66265.16	Training Conducted Annually		
HW22	40 CFR 262.34(d)(5)(ii)	—	Post Emergency Response Plan by telephone.		
HW23	40 CFR 262.34(d)(5)(i)	CCR 22 66265.55	Have an emergency coordinator on call or available during emergency.		
HW24	—	CCR 22 66265.51-55	Contingency Plan Completed	II	4/14/2017

Facility Rep Initials	CC Hazmat Rep Initials	Date
	TA	3/14/2017

CONTRA COSTA HEALTH SERVICES

Contra Costa Health Services / Hazardous Materials Programs
4585 Pacheco Boulevard, Suite 100, Martinez, CA 94553
Telephone (925) 335-3200 FAX (925) 646-2073
WWW.CCHEALTH.ORG/GROUPS/HAZMAT
WILLIAM B. WALKER, M.D., HEALTH SERVICES DIRECTOR • RANDALL L. SAWYER, DIRECTOR

Hazardous Waste Inspection/Compliance Checklist (page 2 of 2)

FACILITY NAME	SITE ID	INSPECTION DATE
Shell Martinez Refinery	729718	2/28 - 3/2/2017

Viol Code	Authority SQG Via CCR 22 66262.34	Authority LQG	GENERAL REQUIREMENTS	Viol Class.	Violation Due Date/ Violation Corrected
HW25	40 CFR 262.34(d)(5)(iv)	CCR 22 66265.51	Properly carry out contingency plan during an emergency.		
			FACILITY OPERATION		
HW26	40 CFR 265.31, Via 262.34(d)(4)	CCR 22 66265.31	Maintain and/or operate facility to prevent release or fire	II	3/21/2017
HW27	40 CFR 265.32(c) Via 262.34(d)(4)	CCR 22 66265.32	Spill/fire control equipment available.	II	3/21/2017
HW28	40 CFR 265.32(a) & (b) Via 262.34(d)(4)	CCR 22 66265.32	Facility equipped with internal communication or alarm.		
HW29	40 CFR 265.33 Via 262.34(d)(4)	CCR 22 66265.33	Equipment properly maintained and tested		
HW30	40 CFR 265.35, Via 262.34(d)(4)	CCR 22 66265.35	Maintain adequate aisle space		
HW31	40 CFR 265.37, Via 262.34(d)(4)	CCR 22 66265.37	Arrangements with response agencies		
			HAZARDOUS WASTE TANKS & CONTAINERS		
HW32	CCR 22 66262.34(f)	—	Properly label/date hazardous waste container and/or tank.		
HW33	CCR 22 66262.34	CCR 22 66262.34	Proper Markings including start date and composition		
HW34	HSC 25143.9(a)	HSC 25143.9(a)	Proper label on Excluded Recyclable Materials		
			HAZARDOUS WASTE CONTAINERS		
HW35	CFR 265.171, Via 262.34(d)(2)	CCR 22 66265.171	Container in good condition	II	3/21/2017
HW36	CFR 265.172, Via 262.34(d)(2)	CCR 22 66265.172	Container and/or liner compatible		
HW37	CFR 265.173, Via 262.34(d)(2)	CCR 22 66265.173	Containers are kept closed		
HW38	CFR 265.174, Via 262.34(d)(2)	CCR 22 66265.174	Conduct weekly inspections		
HW39	—	CCR 22 66265.176	Buffer zone for ignitable wastes		
HW40	CFR 265.177, Via 262.34(d)(2)	CCR 22 66265.177	Properly separate incompatible wastes		
HW41	CCR 22 66261.7(e)(f)(i)	CCR 22 66261.7(e)(f)(i)	Properly manage containers or inner liners removed from containers greater than 5 gallons (Accumulation time not to exceed one year)		
			HAZARDOUS WASTE TANK SYSTEMS		
HW42	CFR 262.201, Via 262.34(d)(2)	CCR 22 66265.190	Tank in good condition		
HW43	—	CCR 22 66265.191(a) & (e)	Complete annual integrity assessment for HW tank system without secondary containment.		
HW44	—	CCR 22 66265.191(a) or 66265.192(a)	Failed to obtain a PE assessment for hazardous waste (HW) tank system.	II	5/15/2017
HW45	Check local FD	CCR 22 66265.193(a)	Failed to provide proper secondary containment and/or leak detection for HW tank system.		
HW46	CFR 265.201, Via 262.34(d)(2)	CCR 22 66265.194(a)	Failed to use proper spill/overfill prevention controls and practices.		
HW47	CFR 265.201 Via 262.34(d)(2)	CCR 22 66265.194	Comply with tank standards which include: two feet of freeboard (where applicable), shut off for waste feed line, & daily inspections of waste levels		
HW48	—	CCR 22 66265.195(c)	Failed to inspect and/or document daily HW tank system inspections.		
HW49	—	CCR 22 6265.196(e)(1) or (3)	Notify DTSC when a release to environment occurred from HW tank system.		
HW50	CCR 22 67383.3	CCR 22 66265.197 CCR 22 67383.3	Properly complete and/or document closure for a hazardous waste tank.		
HW51	—	—	Other:		

Observations:

CCHSHMP conducted a HWG program inspection on site from February 28 to March 1, 2017: Day 1, February 28 consisted of paperwork review; and Day 2, March 1 consisted of field walks of certain areas of the refinery.

~~Day 1, 2/28/2017 - Paperwork/Documentation Review~~
CCHSHMP reviewed the following documents:
- 2015 SB14 Hazardous Waste Reduction and Management Report (for 2010-2014 reporting)
- U.S. EPA RCRA Hazardous Waste Biennial Report (due March 1, 2017)

ENTERED

Total Time for Review and Inspection (in 15 minute increments): 80	☐ Notice to Comply	☑ Notice of Violation	☐ No Violations Observed
Facility Rep Initials	CC Hazmat Rep Initials TA		Date 3/14/2017

CONTRA COSTA HEALTH SERVICES

Contra Costa Health Services / Hazardous Materials Programs
4585 Pacheco Boulevard, Suite 100, Martinez, CA 94553
Telephone (925) 335-3200 FAX (925) 646-2073
WWW.CCHEALTH.ORG/GROUPS/HAZMAT
WILLIAM B. WALKER, M.D., HEALTH SERVICES DIRECTOR • RANDALL L. SAWYER, DIRECTOR

INSPECTION COVER SHEET

FACILITY NAME	FACILITY ADDRESS	INSPECTION DATE
Shell Martinez Refinery	3485 Pacheco Blvd. Martinez, CA 94553	2/28-3/2/2017
Contact Name Michael Monson	EPA ID	SITE ID
Contact Telephone	CAD009164021	729718

Program(s): (check all that apply)

☐ Hazardous Materials Release Response Plan / Business Plan (BP)	☑ Tiered Permitting (TP)
☑ Hazardous Waste Generator (HW)	☐ Green Business (GB)
☐ Underground Storage Tank (UST)	☐ Storm Water Program (SWP)
☐ Aboveground Petroleum Storage Act (APSA)	☐ California Accidental Release Prevention Program (CalARP)

CUPA Permit Current: Yes ☑ No ☐

REPRESENTATIVES PRESENT:

Name	Title	Organization
Michael Monson		Shell Martinez Refinery
Charles Duke Dunham		Shell Martinez Refinery
Nick Plurkowski		Shell Martinez Refinery

Facility Description/Comments:

Routine Hazardous Waste Generator and Tiered Permit Inspections

CCHSHMP Specialists Present:
- Karine Abramians
- Seth Heller
- Trisha Asuncion

ISSUANCE OF NOTICES:

A **NOTICE TO COMPLY** or **NOTICE OF VIOLATION** is issued to identify conditions observed this day that are alleged to be violations of one or more sections of the California Health and Safety Code (HSC), the California Code of Regulations (CCR), Code of Federal Regulations (CFR), or Contra Costa County Code (CCC). The facility may be subject to reinspection at any time by Contra Costa Health Services Hazardous Materials Programs (CCHSHMP) to ensure that observed violations cited on the Notices are corrected. Failure to correct violations within the scheduled period provided may result in CCHSHMP citing the facility for continuing or additional violations. Issuances of Notices do not preclude CCHSHMP from taking any administrative, civil, or criminal action as a result of the violations noted. (See back)

CONSENT:

Consent includes inspecting hazardous material/waste handling areas, taking photographs, reviewing and copying documents, questioning personnel and sampling activities to determine compliance with applicable laws and regulations.

Facility Rep GORDON JOHNSON Consent to inspect given by	Facility Rep Signature	Date 3/14/17
CC Hazmat Rep Karine Abramians, Seth Heller	CC Hazmat Signature	Date 3/14/17

CONTRA COSTA
HEALTH SERVICES

Contra Costa Health Services / Hazardous Materials Programs
4585 Pacheco Boulevard, Suite 100, Martinez, CA 94553
Telephone (925) 335-3200 FAX (925) 646-2073
WWW.CCHEALTH.ORG/GROUPS/HAZMAT
WILLIAM B. WALKER, M.D., HEALTH SERVICES DIRECTOR • RANDALL L. SAWYER, DIRECTOR

CONTINUATION SHEET

Program: ☐ UST ☐ BP ☑ HW ☐ TP ☐ SWP ☐ APSA ☐ CalARP ☐ GB ☐ Other

FACILITY NAME	SITE ID	DATE
Shell Martinez Refinery	729718	2/28-3/2/2017

Comments:

Day 1, 2/28/2017 (continued):
- 2016 Hazardous Waste Manifests, Quarter 2 (April - June) and Quarter 4 (October - December)
- Weekly Hazardous Waste Area Inspection Logs (June and December 2016), which includes Logistics, 90-Day Central Drum Storage, Laydown, Field Bins, and Liquid Handling Sites
- Hazardous Waste Training record for Hazardous Waste Coordinator Charles (Duke) Dunham
- Laboratory Analytical Report for flexicoker (FXU) petroleum coke fines

Highlights of Paperwork/Documentation Review:

2015 SB14 Hazardous Waste Reduction and Management Report - Report had three components: Source Reduction Evaluation Review and Plan, Hazardous Waste Management Performance Report, and Summary Progress Report. Per the report, it appeared that the refinery was able to reduce their hazardous waste disposal by approximately 50% partly due to reuse and recycling activities. One of the conclusions of the report was that the refinery will look into more recycling opportunities.

Review of 2016 Manifests - The initial generator copies had been paired with their respective final disposal facility copies. Reviewed the types of waste streams being manifested off from the refinery. Based out of that sample of manifests, noted a couple of consistent waste streams being removed that CCHSHMP would look into further during the inspection: Eco with benzene (waste codes D018/223) and FXU petroleum coke dry fines (352). Additionally, CCHSHMP observed bills of lading for several Excluded Recycled Materials (ERMs) being removed for off-site use:
- spent grit (from sandblasting operations)
- spent abrasives
- iron solids, ferric chloride - pH control for Recovered Oil Process (ROP); sent to Portland Cement
- spent catalysts (including alumina)

Manifest of Rejected Load of CO Boiler Fines - Manifest dated 12/14/2016 was rejected at the Buttonwillow facility because the facility was closed. Was the load removed a week later per a subsequent manifest on 12/21/2016? Hazardous Waste Coordinator Mr. Duke Dunham explained that the load was returned to the refinery where the 90-day accumulation restarted. Nevertheless, per the manifest, the returned load was finally removed and accepted by the Buttonwillow facility in January 2017.

Review of Laboratory Analysis of Flexicoker (FXU) Petroleum Coke Fines (from 11/18/2016) - The coke fines have been removed from the refinery as non-RCRA hazardous waste 352 as there has not been many buyers of the dry fines as opposed to the petroleum coke beds, which are sent out as "products" for use at cement kilns. Per the laboratory analytical report, the FXU petroleum dry coke fines are California hazardous waste for nickel and vanadium.

Review of Weekly Hazardous Waste Area Inspection Logs - The inspection records include several areas throughout the refinery. Inspection items include accumulation start dates, container labeling, and container condition.

Day 2, 3/1/2017 - Field Walks
CCHSHMP inspected the following areas:
- 90-day (hazardous waste) Laydown Area
- Laboratory (satellite accumulation areas)
- Flexicoker (petroleum coke dry fines)
- Recovered Oil Process (ROP) unit

Facility Rep Initials	CC Hazmat Rep Initials TA	Date 3/14/2017

CONTRA COSTA
HEALTH SERVICES

Contra Costa Health Services / Hazardous Materials Programs
4585 Pacheco Boulevard, Suite 100, Martinez, CA 94553
Telephone (925) 335-3200 FAX (925) 646-2073
WWW.CCHEALTH.ORG/GROUPS/HAZMAT
WILLIAM B. WALKER, M.D., HEALTH SERVICES DIRECTOR • RANDALL L. SAWYER, DIRECTOR

CONTINUATION SHEET

Program: ☐ UST ☐ BP ☑ HW ☐ TP ☐ SWP ☐ APSA ☐ CalARP ☐ GB ☐ Other

FACILITY NAME	SITE ID	DATE
Shell Martinez Refinery	729718	2/28-3/2/2017

Comments:

Day 2, 3/1/2017 (continued):
Petroleum Coke Clarification - Prior to the field walks, Hazardous Waste Engineer, Mr. Michael Monson clarified the question posed by CCHSHMP as to when petroleum coke is considered a product and used off-site and when it is disposed of as a hazardous waste. Mr. Monson explained that petroleum coke generally goes off as product for use off-site. The delayed coking unit produces a light solid, more fluid-like, coke solids, the petroleum coke beds. The petroleum coke beds made by the delayed coking unit are combined with coke beds produced by the flexicoker and are sent off-site to places like Koch Carbon or cement kilns.

Unlike the delayed coking unit, which produces only the petroleum coke beds, the flexicoker (FXU) produces both the coke beds and dry fines. Mr. Monson explained that when more flexigas from the refinery is used for burning at the FXU furnace, less petroleum coke is produced. Conversely, if less flexigas is burned, more petroleum coke is produced. Based on the hazardous waste manifests, the dry fines from the FXU have been removed from the refinery as a California hazardous waste. The dry fines are stored in three 600-ton silos at the FXU. If there is an excess of the dry fines being stored, and there is no buyer of these dry fines, the fines are placed in super sacks and labeled as hazardous waste.

Flexicoker/Dimersol - CCHSHMP observed several labeled 55-gallon drums throughout the two units for oily debris (used PPE) and aerosol cans. Portable fire extinguishers are posted throughout the two areas. Behind the FXU is the staging area for the super sacks of dry fines. CCHSHMP observed more than a couple of hundred super sacks awaiting removal. The super sacks were on placed on top of wooden pallets and had hazardous waste labels affixed to the super sacks. As Mr. Monson explained, because there has not been a current buyer of the dry fines, the fines have been removed from the refinery as hazardous waste.

Accumulation start dates ranged from 2/6/2017 to 2/20/2017. CCHSHMP observed a couple of storm drains near the staging area. CCHSHMP asked about the location of spill control equipment for this staging area. CCHSHMP and USW Environmental Representative Nick Plurkowski spoke with FXU operators. They had said that the super acks are double-lined. If the sacks are punctured, they have have a spill "overpack" which they can place over a compromised super sack. If needed, they also have a sweeper to pick up the fines.

CCHSHMP asked what are the inputs to the FXU. Mr. Plurkowski explained that the heavy bottoms from crude oil is taken to the FXU via pitch beds; Mr. Plurkowski took CCHSHMP to the location of the pitch beds.

90-Day Laydown Area - CCHSHMP observed several roll-off bins of varying sizes. The roll-off bins were either labeled "hazardous waste" (asbestos, Eco Tk 15096) or "designated waste." The designed wastes were materials that could be reused or taken to landfill. One roll-off bin was labeled "Excluded Recyclable Material" for used grit. CCHSHMP observed several roll-off bins of Eco Tk 15096 towards the end of the Laydown Area, with one roll-off, labeled "toxic" as a hazard and an accumulation start of 2/6/2017, that appeared to be compromised and leaking. On the ground nearby, there was a black oily-like substance, which was observed coming from the roll-off bin. CCHSHMP alerted Shell Martinez Refinery personnel, including Mr. Dunham to mitigate the issue. CCHSHMP reviewed the weekly inspection log for the Laydown Area from the previous week of 2/20, which did not note any poor conditions of containers in the area. The release may have been a more recent concurrence after this weekly inspection.

Facility Rep Initials	CC Hazmat Rep Initials TA	Date 3/14/2017

CONTRA COSTA
HEALTH SERVICES

Contra Costa Health Services / Hazardous Materials Programs
4585 Pacheco Boulevard, Suite 100, Martinez, CA 94553
Telephone (925) 335-3200 FAX (925) 646-2073
WWW.CCHEALTH.ORG/GROUPS/HAZMAT
WILLIAM B. WALKER, M.D., HEALTH SERVICES DIRECTOR • RANDALL L. SAWYER, DIRECTOR

CONTINUATION SHEET

Program: ☐ UST ☐ BP ☑ HW ☐ TP ☐ SWP ☐ APSA ☐ CalARP ☐ GB ☐ Other

FACILITY NAME	SITE ID	DATE
Shell Martinez Refinery	729718	2/28-3/2/2017

Comments:

Day 2, 3/1/2017 (continued):
Laboratory - The laboratory is where samples from the fuels (e.g., gasoline and jet fuel) produced by the refinery are tested for quality assurance and control. CCHSHMP inspected satellite accumulation containers underneath fume hoods. The removal of the wastes accumulated in satellite containers are routinely logged. CCHSHMP was shown the process in which laboratory personnel empty containers of fuel samples and clean these containers for reuse. The fuel samples and rinsate do not go off into a sanitary sewer; rather, the liquids are piped to collect in a 249-gallon tank labeled "Excluded Recyclable Material." Solvents (e.g., acetone) used for the laboratory testing equipment also go to this 249-gallon tank. These tank contents are sent by pipe to Tank 15096 of the Recovered Oil Process. CCHSHMP requested inspection logs for the hazardous waste areas in the laboratory, but was unable to review them by conclusion of the inspection. Update, 3/6/3017: CCHSHMP received/reviewed copies of the Hazardous Waste Container Weekly Inspection Logs for the Laboratory for January-February 2017.

Recovered Oil Process (ROP) Unit - The ROP unit serves as a batch process to recycle oil-bearing hazardous materials from the Brine De-Oiling Unit (BDU), which is part of the crude unit. The recovered oil from this process is managed as an Excluded Recycled Material (ERM) that would return to the crude unit. The unit is operated by Clean Harbors personnel. Unit operators have to wear air purifying respirators if operating the unit inside the concrete pad.

CCHSHMP did not enter the concrete pad area. CCHSHMP observed Tank 15096 (1,050,000 gallon capacity per CHIT), which is the intake tank for oil from the BDU. There are other inputs, like the fuel and rinsate from 249-gallon tank at the laboratory, that also make it into Tank 15096. These inputs include water from "marketing returns." However, Tank 15096 primarily receives oil from the BDU at approximately 700 barrels a day. In batches, contents of Tank 15096 enter a smaller vessel in which a hydrogen sulfide scavenger, Sulfix polymer (ammonium sulfate), and ferric chloride (pH control) are added and put in a centrifuge. The centrifuge facilitates the separation of the contents into three phases: aqueous, which goes to the Effluent Treatment Process (ETP); solids, which goes off as a RCRA hazardous waste as "Eco Tk 15096"; and the recovered oil, which goes to Tank 532 (3,265,668 gallon capacity, per CHIT), eventually returning to the crude unit. CCHSHMP observed two roll-off bins near the concrete pad, which were similar to the one that was observed leaking at the Laydown Area earlier in the day, that had hazardous waste labels.

Day 3, 3/2/2017:
The inspection continued off-site, back at the CCHSHMP office, where notes and photographs were reviewed and this inspection report generated.

Facility Rep Initials	CC Hazmat Rep Initials TA	Date 3/14/2017

CONTRA COSTA HEALTH SERVICES

Contra Costa Health Services / Hazardous Materials Programs
4585 Pacheco Boulevard, Suite 100, Martinez, CA 94553
Telephone (925) 335-3200 FAX (925) 646-2073
WWW.CCHEALTH.ORG/GROUPS/HAZMAT
WILLIAM B. WALKER, M.D., HEALTH SERVICES DIRECTOR ◆ RANDALL L. SAWYER, DIRECTOR

CONTINUATION SHEET

Program: ☐ UST ☐ BP ☑ HW ☐ TP ☐ SWP ☐ APSA ☐ CalARP ☐ GB ☐ Other

FACILITY NAME	SITE ID	DATE
Shell Martinez Refinery	729718	2/28-3/2/2017

Comments:

NOTICE OF VIOLATION

HW02 (CLASS II) - HAZARDOUS WASTE DETERMINATION:
CCHSHMP observed process contact waters from various units/areas (e.g., pipe from contact water from flexicoker (FXU) going into a sewer) entering the refinery's process sewers. Per Shell, these waters are eventually routed to the Effluent Treatment Process (ETP). There has been no hazardous waste determination at these numerous points of generation. Additionally, a hazardous waste determination may be needed for the contents of the 249-gallon tank, V18259, at the laboratory that collects fuel samples, rinsate, and solvents from the laboratory testing if to exempt it from hazardous waste tank requirements, see HW44.

Corrective Action - By May 15, 2017, Shell needs to conduct hazardous waste determination at the points of generation of these contact waters that are sent for treatment at the ETP. Additionally, Shell will need to conduct a hazardous waste determination of the contents of tank V18259 at the laboratory if it is to be exempt from hazardous waste tank requirements. Please send copies of the laboratory analytical to CCHSHMP for review when available.

HW24 (CLASS II) - CONTINGENCY PLAN COMPLETED:
CCHSHMP had reviewed the refinery's Emergency Response Plan and observed some components that had covered the required elements for the Large Quantity Generator (LQG) Contingency Plan, which details the procedures, personnel, and emergency equipment to be implemented in the event of an incidental release involving the refinery's hazardous wastes. However, these Contingency Plan elements were diffused into different parts of the refinery's comprehensive Emergency Response Plan, instead of consolidated into one place or section of the Emergency Response Plan.

Corrective Action - By April 14, 2017, Shell shall develop a Hazardous Waste LQG Contingency Plan to include: emergency arrangements for nearby hospitals/medical facilities, hazardous waste contractors, public safety agencies (police, fire departments); emergency contacts, including emergency coordinator; location, physical description, capabilities of emergency equipment; evacuation plan, including evacuation routes and assembly areas; and current number of Cal/OES State Warning Center. Submit a copy of this Plan to CCHSHMP directly or to CERS.

HW26 (CLASS II) - MAINTAIN/OPERATE FACILITY TO PREVENT A RELEASE:
On inspection of the 90-Day Hazardous Waste Laydown Area, a roll-off bin labeled hazardous waste labeled "Eco TK 15096" contents and "toxic" as a hazard appeared to be compromised and released some of its contents an black, oily-like substance onto the ground. This waste is a RCRA toxic waste for benzene (D018) and comes for the Recovered Oil Unit process.

Corrective Action - By March 21, 2017, Shell shall mitigate the release and implement any necessary cleanup procedures. Additionally, provide a status update or summary to CCHSHMP as to what mitigation/cleanup procedures were implemented and a determination of a possible cause to the release.

HW27 (CLASS II) - SPILL/FIRE CONTROL EQUIPMENT AVAILABLE:
At the 90-Day Laydown Area, an unmanned area, where a hazardous waste roll-off bin was observed leaking, CCHSHMP did not observe spill and fire control equirement available at that area for use in the event of a release or fire.

Corrective Action - By March 21, 2017, Shell shall place spill and fire control equipment in the 90-Day Laydown Area. Shell shall send a photo of the spill/fire control equipment placed in the area.

HW35 (CLASS II) - CONTAINER IN GOOD CONDITION:
At the 90-Day Laydown Area, a hazardous waste roll-off bin containing a RCRA waste "Eco TK 15096" was found leaking its contents.

Corrective Action - By March 21, 2017, implement mitigation/cleanup procedures, as per HW26. Additionally, transfer contents of the leaking container into a better container, if the container is indeed compromised.

Facility Rep Initials	CC Hazmat Rep Initials TA	Date 3/14/2017

CONTRA COSTA
HEALTH SERVICES

Contra Costa Health Services / Hazardous Materials Programs
4585 Pacheco Boulevard, Suite 100, Martinez, CA 94553
Telephone (925) 335-3200 FAX (925) 646-2073
WWW.CCHEALTH.ORG/GROUPS/HAZMAT
WILLIAM B. WALKER, M.D., HEALTH SERVICES DIRECTOR • RANDALL L. SAWYER, DIRECTOR

CONTINUATION SHEET

Program: ☐ UST ☐ BP ☑ HW ☐ TP ☐ SWP ☐ APSA ☐ CalARP ☐ GB ☐ Other

FACILITY NAME	SITE ID	DATE
Shell Martinez Refinery	729718	2/28-3/2/2017

Comments:

NOTICE OF VIOLATION (continued):

HW44 (CLASS II) - FAILED TO OBTAIN PE ASSESSMENT FOR HAZARDOUS WASTE SYSTEM:
The 249-gallon tank V1859 at the laboratory potentially contains hazardous waste, as it collects solvents, rinsate and fuel samples from testing operations. The tank is currently labeled as "Excluded Recycled Material," (ERM) due to an oil-bearing exclusion, although at its current state, the contents should not considered an ERM. The contents of V1859 are routed to Tank 15096 at the Recoved Oil Process (ROP) unit. At this unit, the contents of Tank 15096 undergo treatment in order to recover oil to be recycled back into the crude unit.

Corrective Action: A hazardous waste determination tank contents is necessary, as per HW02, to see if the contents meet the definition of a hazardous waste. By May 15, 2017, Shell obtain a PE assessment for the tank and meet other hazardous waste tank requirements if the contents are indeed determined to be a hazardous waste.

Facility Rep Initials	CC Hazmat Rep Initials TA	Date 3/14/2017

HWTS Manifest Tonnage

261 manifests
3,015.376 tons

EPA ID: CAD009164021 - **Name:** SHELL MARTINEZ REFINERY
As a Generator **For Ship Year:** 2016

Calif. Waste Code Summary

Code	Description	Tons	% of Total
141	OFF-SPEC, AGED, OR SURPLUS INORGANICS	8.00000	0.27
151	ASBESTOS-CONTAINING WASTE	37.97000	1.26
162	OTHER SPENT CATALYST	559.48650	18.55
181	OTHER INORGANIC SOLID WASTE	724.47250	24.03
212	OXYGENATED SOLVENTS	0.20000	0.01
214	UNSPECIFIED SOLVENT MIXTURE	0.15500	0.01
222	OIL/WATER SEPARATION SLUDGE	8.01000	0.27
223	UNSPECIFIED OIL-CONTAINING WASTE	1,051.60450	34.87
331	OFF-SPEC, AGED, OR SURPLUS ORGANICS	2.23600	0.07
343	UNSPECIFIED ORGANIC LIQUID MIXTURE	0.37400	0.01
352	OTHER ORGANIC SOLIDS	243.79000	8.08
551	LABORATORY WASTE CHEMICALS	0.01750	0.00
571	FLY ASH, BOTTOM ASH, AND RETORT ASH	379.06000	12.57
Total Tons:		**3,015.37600**	**100.00**

FCC waste
2014 - 37.88 T

RCRA Waste Code Summary

Code	Description	Tons	% of Total	
D001	Ignitable	0.00750	0.00	
D002	Corrosives	0.00250	0.00	
D018	Benzene	694.10500	46.58	- clean out solids from removal oil
D039	Tetrachloroethylene	0.00250	0.00	
F005	Non-halogenated solvents	2.52950	0.17	
F038	Petroleum refinery secondary oil/water/solids separation sludge	8.01000	0.54	
K048	Dissolved air flotation DAF float from the petroleum refinery industry	393.93000	26.44	- CO Boiler fines / fly ash, refinery
K051	API separator sludge from the petroleum refining industry.	96.03750	6.44	
K171	Spent Hydrotreating catalyst from petroleum refining operations	295.49200	19.83	
U125	Furfural	0.06150	0.00	- expired chemicals, not used
U210	Tetrachloroethylene	0.00500	0.00	
Total Tons:		**1,490.18300**	**100.00**	

Lab pack – D039
Lab pack – U210

End of Report

Copyright © 2010 State of California

CONTRA COSTA HEALTH SERVICES

Contra Costa Health Services / Hazardous Materials Programs
4585 Pacheco Boulevard, Suite 100, Martinez, CA 94553
Telephone (925) 335-3200 FAX (925) 646-2073
WWW.CCHEALTH.ORG/GROUPS/HAZMAT
WILLIAM B. WALKER, M.D., HEALTH SERVICES DIRECTOR • RANDALL L. SAWYER, DIRECTOR

Hazardous Waste Inspection/Compliance Checklist (page 1 of 2)

FACILITY NAME	SITE ID	INSPECTION DATE
Shell Martinez Refinery	729718	3/22/2017

INSPECTION TYPE	VIOLATION CLASSIFICATIONS	EPA ID
Follow-Up	M = Minor ☐ CI I = Major ☐ CI II = Medium / Repeat Minor ☐	CAD009164021

California Code of Regulations (CCR), Title 22, Division 4.5, Chapter 10, §66001 et al
California Health and Safety Code (HSC), Division 20, Chapter 6.5, §25100 et al
Code of Federal Regulations (CFR) Title 40, Chapter 1, Part 260 et al

Disposal Documents Reviewed For Year:	HW Gen Rpt Form On File? ☐Yes ☐No	Total Annual Tonnage of All Hazardous Waste Generated:

CA State Waste Code if applicable, Federal Code(s)	Hazardous Waste Stream	Annual Quantity (Tons)
	Additional Wastes on Continuation Sheet? ☐Yes ☐No	

Generator Status:
☑ RCRA-LQG > 1,000 kg/month ☐ CA-LQG > 1,000 kg/month ☐ CA-SQG > 100 to < 1,000 kg/month ☐ CA-CESQG < 100 kg/month ☐ Episodic

Viol Code	Authority SQG Via CCR 22 66262.34	Authority LQG	GENERAL REQUIREMENTS	Viol Class.	Violation Due Date/ Violation Corrected
HW01	HSC 25189.5	HSC 25189.5	Disposal, treatment or storage at unauthorized location		
HW02	CCR 22 66262.11	CCR 22 66262.11	Hazardous Waste Determination	II	5/15/2017
HW03	CCR 22 66262.12	CCR 22 66262.12	Obtain & maintain a valid EPA ID Number (DTSC Form 1358)		
HW04	CFR 262.34(d)	—	Accumulation time may not exceed 180 days (Unless waste shipped 200 or more miles, no more than 270 days)		
HW05	—	CCR 22 66262.34(a)	Accumulation time may not exceed 90 days		
HW06	CCR 22 67450.1	CCR 22 67450.1	Notify CUPA for eligible onsite treatment.		
HW07	HSC 25163(a)	HSC 25163(a)	Lawful transportation of hazardous waste		
			RECORDKEEPING & REPORTING		
HW08	CCR 22 66262.20	CCR 22 66262.20	Properly Complete Manifest		
HW09	CCR 22 66262.23	CCR 22 66262.23	Send manifest copy to DTSC, P.O. Box 400, Sacramento, CA 95812		
HW10	HSC 25160.2	HSC 25160.2	Properly complete consolidated manifest		
HW11	CCR 22 66262.40	CCR 22 66262.40	Keep waste manifests and/or consolidated manifests for 3 years		
HW12	—	CCR 22 66262.40-41	Biennial Report (RCRA LQG Only)		
HW13	HSC 25123.3	CCR 22 66262.42	File manifest Exception Report with DTSC		
HW14	HSC 25143.10	HSC 25143.10	Biennial Excluded Recyclable Materials Report		
HW15	HSC 25143.2(l) & CCR 22 66261.2(g)	HSC 25143.2(l) & CCR 22 66261.2(g)	Maintain adequate records demonstrating claim of exemption for Excluded Recyclable Material		
HW16	CCR 22 66262.40(c)	CCR 22 66262.40(c)	Keep copies of analytical results, waste analysis records, or waste determination results for 3 years		
HW17	CCR 22 66266.130(c)(5)	CCR 22 66266.130(c)(5)	Keep disposal receipts for 3 years for drained used oil filters and/or drained fuel filters		
HW18	—	CCR 22 67100.1	SB14 – Hazardous Waste Source Reduction Evaluation Review Plan		
			HAZARDOUS WASTE HANDLER TRAINING		
HW19	40 CFR 262.34(d)(5)(ii)	CCR 22 66265.16	Employee training program adequate.		
HW20	—	CCR 22 66265.16	Training Documentation		
HW21	—	CCR 22 66265.16	Training Conducted Annually		
HW22	40 CFR 262.34(d)(5)(ii)	—	Post Emergency Response Plan by telephone.		
HW23	40 CFR 262.34(d)(5)(i)	CCR 22 66265.55	Have an emergency coordinator on call or available during emergency.		
HW24	—	CCR 22 66265.51-55	Contingency Plan Completed	II	4/14/2017

Facility Rep Initials MJM	CC Hazmat Rep Initials TA	Date 3/22/2017

ENTERED

CONTRA COSTA HEALTH SERVICES

Contra Costa Health Services / Hazardous Materials Programs
4585 Pacheco Boulevard, Suite 100, Martinez, CA 94553
Telephone (925) 335-3200 FAX (925) 646-2073
WWW.CCHEALTH.ORG/GROUPS/HAZMAT
WILLIAM B. WALKER, M.D., HEALTH SERVICES DIRECTOR • RANDALL L. SAWYER, DIRECTOR

Hazardous Waste Inspection/Compliance Checklist (page 2 of 2)

FACILITY NAME	SITE ID	INSPECTION DATE
Shell Martinez Refinery	729718	3/22/2017

Viol Code	Authority SQG Via CCR 22 66262.34	Authority LQG	GENERAL REQUIREMENTS	Viol Class.	Violation Due Date/ Violation Corrected
HW25	40 CFR 262.34(d)(5)(iv)	CCR 22 66265.51	Properly carry out contingency plan during an emergency.		
			FACILITY OPERATION		
HW26	40 CFR 265.31, Via 262.34(d)(4)	CCR 22 66265.31	Maintain and/or operate facility to prevent release or fire	II	Corrected 3/2/2017
HW27	40 CFR 265.32(c) Via 262.34(d)(4)	CCR 22 66265.32	Spill/fire control equipment available.	II	4/14/2017
HW28	40 CFR 265.32(a) & (b) Via 262.34(d)(4)	CCR 22 66265.32	Facility equipped with internal communication or alarm.		
HW29	40 CFR 265.33 Via 262.34(d)(4)	CCR 22 66265.33	Equipment properly maintained and tested		
HW30	40 CFR 265.35, Via 262.34(d)(4)	CCR 22 66265.35	Maintain adequate aisle space		
HW31	40 CFR 265.37, Via 262.34(d)(4)	CCR 22 66265.37	Arrangements with response agencies		
			HAZARDOUS WASTE TANKS & CONTAINERS		
HW32	CCR 22 66262.34(f)	—	Properly label/date hazardous waste container and/or tank.		
HW33	CCR 22 66262.34	CCR 22 66262.34	Proper Markings including start date and composition		
HW34	HSC 25143.9(a)	HSC 25143.9(a)	Proper label on Excluded Recyclable Materials		
			HAZARDOUS WASTE CONTAINERS		
HW35	CFR 265.171, Via 262.34(d)(2)	CCR 22 66265.171	Container in good condition	II	Corrected 3/2/2017
HW36	CFR 265.172, Via 262.34(d)(2)	CCR 22 66265.172	Container and/or liner compatible		
HW37	CFR 265.173, Via 262.34(d)(2)	CCR 22 66265.173	Containers are kept closed		
HW38	CFR 265.174, Via 262.34(d)(2)	CCR 22 66265.174	Conduct weekly inspections		
HW39	—	CCR 22 66265.176	Buffer zone for ignitable wastes		
HW40	CFR 265.177, Via 262.34(d)(2)	CCR 22 66265.177	Properly separate incompatible wastes		
HW41	CCR 22 66261.7(e)(f)(l)	CCR 22 66261.7(e)(f)(l)	Properly manage containers or inner liners removed from containers greater than 5 gallons (Accumulation time not to exceed one year)		
			HAZARDOUS WASTE TANK SYSTEMS		
HW42	CFR 262.201, Via 262.34(d)(2)	CCR 22 66265.190	Tank in good condition		
HW43	—	CCR 22 66265.191(a) & (e)	Complete annual integrity assessment for HW tank system without secondary containment.		
HW44	—	CCR 22 66265.191(a) or 66265.192(a)	Failed to obtain a PE assessment for hazardous waste (HW) tank system.	II	Corrected 3/16/2017
HW45	Check local FD	CCR 22 66265.193(a)	Failed to provide proper secondary containment and/or leak detection for HW tank system.		
HW46	CFR 265.201, Via 262.34(d)(2)	CCR 22 66265.194(a)	Failed to use proper spill/overfill prevention controls and practices.		
HW47	CFR 265.201 Via 262.34(d)(2)	CCR 22 66265.194	Comply with tank standards which include: two feet of freeboard (where applicable), shut off for waste feed line, & daily inspections of waste levels		
HW48	—	CCR 22 66265.195(c)	Failed to inspect and/or document daily HW tank system inspections.		
HW49	—	CCR 22 6265.196(e)(1) or (3)	Notify DTSC when a release to environment occurred from HW tank system.		
HW50	CCR 22 67383.3	CCR 22 66265.197 CCR 22 67383.3	Properly complete and/or document closure for a hazardous waste tank.		
HW51	—	—	Other:		

Observations:

This is a follow-up report with an update on corrected violations and modifications to the Notice of Violation discussed during the close-out meeting on 3/14/2017.

Total Time for Review and Inspection (in 15 minute increments):	☐ Notice to Comply ☑ Notice of Violation ☐ No Violations Observed	
Facility Rep Initials MJM	CC Hazmat Rep Initials TA	Date 3/22/2017

CONTRA COSTA
HEALTH SERVICES

Contra Costa Health Services / Hazardous Materials Programs
4585 Pacheco Boulevard, Suite 100, Martinez, CA 94553
Telephone (925) 335-3200 FAX (925) 646-2073
WWW.CCHEALTH.ORG/GROUPS/HAZMAT
WILLIAM B. WALKER, M.D., HEALTH SERVICES DIRECTOR • RANDALL L. SAWYER, DIRECTOR

CONTINUATION SHEET

Program: ☐ UST ☐ BP ☑ HW ☐ TP ☐ SWP ☐ APSA ☐ CalARP ☐ GB ☐ Other

FACILITY NAME	SITE ID	DATE
Shell Martinez Refinery	729718	3/22/2017

Comments:

Corrected Violations:
HW26 (CLASS II) - MAINTAIN OPERATE FACILITY TO PREVENT A RELEASE
HW35 (CLASS II) - CONTAINER IN GOOD CONDITION

The above violations were associated with the observed leak/release of hazardous waste contents from the roll-off bin storing "ECO TK 15096" on 3/1/2017. Pictures were provided by the refinery on the next day, 3/2/2017, which showed that the contaminated soil from the release was removed and incident mitigated.

Modification(s) to HWG Notice of Violation issued on 3/14/2017:
HW26 (CLASS II) - SPILL/FIRE CONTROL EQUIPMENT AVAILABLE

During the 3/14/2017 inspection close-out meeting, CCHSHMP and Shell discussed/agreed that in lieu of physically placing spill/fire control equipment at the unmanned Laydown area that equipment and personnel that can be available to mitigate a spill or fire incident in that area will be described in their LQG Contingency Plan. The LQG Contingency Plan is in development per violation HW24. As such, the Corrective Action deadline for HW26 for spill/fire control equipment as been modified to match the Corrective Action deadline for HW24 of April 14, 2017.

HW02 (CLASS II) - HAZARDOUS WASTE DETERMINATION

CCHSHMP and Shell discussed/agreed that generator knowledge can be applied to correct this violation, as long as a written clarification/justification and any associated documentation to support the clarification/justification is provided to CCHSHMP by the Corrective Action deadline of May 15, 2017. This pertains only to addressing the issue of the contact waters from several areas into the process sewers where they eventually head to Effluent Treatment Plant (ETP).

Regarding the issue of hazardous waste determination for the contents of Laboratory Vessel "V18259," Mr. Monson explained that Shell would defer discussion of this vessel to U.S. EPA at this time. CCHSHMP has agreed and will remove this Laboratory Vessel issue from violation HW02.

HW44 (CLASS II) - FAILED TO OBTAIN PE ASSESSMENT FOR HAZARDOUS WASTE SYSTEM

CCHSHMP has received an updated "NOTE TO FILE: Recovered Oil Processing Excluded Recyclable Material," which now includes "V-18259 at QA" as an input to the Recovered Oil Processing (ROP) unit. It was determined by Shell that the contents of the Laboratory Vessel is considered an "oil-bearing hazardous secondary material" in which it is sent to the ROP unit for further processing to recover oil for return to their crude unit. As such, it was determined by Shell that it is an "Excluded Recyclable Material" and should not be subject to hazardous waste tank requirements pursuant to HSC section 25144.

Please be advised that if an extension is needed on any of the violations listed on the 3/14/2017 HWG Notice of Violation, please request an extension from CCHSHMP at least 5 days prior to their respective Corrective Action deadlines.

Facility Rep Initials	CC Hazmat Rep Initials	Date
MJM	TA	3/22/2017

CONTRA COSTA
HEALTH SERVICES

Contra Costa Health Services / Hazardous Materials Programs
4585 Pacheco Boulevard, Suite 100, Martinez, CA 94553
Telephone (925) 335-3200 FAX (925) 646-2073
WWW.CCHEALTH.ORG/GROUPS/HAZMAT
WILLIAM B. WALKER, M.D., HEALTH SERVICES DIRECTOR • RANDALL L. SAWYER, DIRECTOR

INSPECTION COVER SHEET

FACILITY NAME	FACILITY ADDRESS	INSPECTION DATE
Shell Martinez Refinery	3485 Pacheco Blvd. Martinez, CA 94553	3/22/2017
Contact Name Michael Monson	EPA ID	SITE ID
Contact Telephone	CAD0009164021	729718

Program(s): (check all that apply)

☐ Hazardous Materials Release Response Plan / Business Plan (BP)	☑ Tiered Permitting (TP)
☑ Hazardous Waste Generator (HW)	☐ Green Business (GB)
☐ Underground Storage Tank (UST)	☐ Storm Water Program (SWP)
☐ Aboveground Petroleum Storage Act (APSA)	☐ California Accidental Release Prevention Program (CalARP)

CUPA Permit Current: Yes ☑ No ☐

REPRESENTATIVES PRESENT:

Name	Title	Organization
Michael Monson	Environmental Engineer - Waste	Shell

Facility Description/Comments:

Follow-up to 2/28-3/2/2017 HWG Inspection

ISSUANCE OF NOTICES:

A **NOTICE TO COMPLY** or **NOTICE OF VIOLATION** is issued to identify conditions observed this day that are alleged to be violations of one or more sections of the California Health and Safety Code (HSC), the California Code of Regulations (CCR), Code of Federal Regulations (CFR), or Contra Costa County Code (CCC). The facility may be subject to reinspection at any time by Contra Costa Health Services Hazardous Materials Programs (CCHSHMP) to ensure that observed violations cited on the Notices are corrected. Failure to correct violations within the scheduled period provided may result in CCHSHMP citing the facility for continuing or additional violations. Issuances of Notices do not preclude CCHSHMP from taking any administrative, civil, or criminal action as a result of the violations noted. (See back)

CONSENT:

Consent includes inspecting hazardous material/waste handling areas, taking photographs, reviewing and copying documents, questioning personnel and sampling activities to determine compliance with applicable laws and regulations.

Facility Rep Michael Monson Consent to inspect given by	Facility Rep Signature	Date 3/22/2017
CC Hazmat Rep Trisha Asuncion	CC Hazmat Signature	Date 3/22/2017

To: Ward, Scott@DTSC[Scott.Ward@dtsc.ca.gov]; Lin, Sharon[Lin.Sharon@epa.gov]
From: Cruz, Amanda
Sent: Fri 7/28/2017 10:31:27 PM
Subject: Shell martinez errc_records.xlsx
Shell martinez errc_records.xlsx

Good afternoon –

Thank you for letting me participate in the meeting and I hope I can bring value to the project. I pulled a list of our RCRA records (attached). I requested the hard copy files that I highlighted in blue and they will be available probably Wednesday next week here in the building (in the event Scott wants to come see them). If you want to review any other files let me know and I can request them and arrange space to have you come on site to review.

I'll let you know if I find anything useful in the ones I pulled!

Amanda

To: Schofield, John[Schofield.John@epa.gov]; Larry.Ramirez@dtsc.ca.gov[Larry.Ramirez@dtsc.ca.gov]; Melissa.Hagen@hsd.cccounty.us[Melissa.Hagen@hsd.cccounty.us]; Lin, Sharon[Lin.Sharon@epa.gov]
Cc: Natalie.Braden@shell.com[Natalie.Braden@shell.com]; michael.monson@shell.com[michael.monson@shell.com]
From: michael.monson@shell.com
Sent: Tue 4/7/2015 6:11:40 PM
Subject: Brand Training Records
20150407100043184.pdf

Attached please find the list of Brand courses for both Joaquin Rodriguez and Chad Owens. Also included is the certificate of completion of apprenticeship for Chad Owens issued by the state Department of Industrial Relations.

In addition to the Brand courses, all contractors at Shell must take a site-specific HSE course annually. This course is administered by the Occupational Safety Councils of America (OSCA), but was developed by Shell, and includes the following text related to hazardous waste management:

There are different categories of waste, so you need to know them in order to handle and dispose of waste properly. The first of these is Hazardous Waste. This includes anything listed as hazardous by the state or the EPA, or anything that's toxic, ignitable, corrosive or reactive. If a particular waste is unknown, you should consider it hazardous until Environmental Affairs can make a proper determination. If you are not sure where to dispose of material, stop and ask your supervisor or the area's Hazardous Waste Coordinator at extension 3329. The category of non-hazardous waste applies to anything that does not exhibit hazardous characteristics. An example is clean trash, which includes household materials like paper, glass, wood, plastic and cardboard. Don't place these items in non-hazardous waste receptacles if they've been soiled with oil or hazardous material.

Oily debris is clean trash that has been contaminated with oil. These items should be collected in covered hazardous waste barrels that are labeled exclusively for oily debris.

Proper waste handling is the key. There are drums, bins and other containers throughout the refinery for proper collection of spent, spilled or waste materials. Before you try to dispose of something, be sure you identify its proper waste category, then, put it in the properly labeled container. If you are not sure of material's waste category, stop and ask your supervisor or call the Hazardous Waste Coordinator at extension 3329.

All containers, including drums, bins, boxes, bottles and cans, must be properly labeled as one of the following before using:

- □□□□□□□□ Hazardous;
- □□□□□□□□ Non-Hazardous;
- □□□□□□□□ Designated waste;
- □□□□□□□□ Special, which may include process streams or used oil;
- □□□□□□□□ Recyclable;
- □□□□□□□□ Excludable Recyclable Material or ERM;
- □□□□□□□□ or with the name of particular materials or supplies.

All hazardous waste containers must be kept closed, with no visible gaps, unless material is being added to the container. Spills must be cleaned up immediately. If there is a spill from a hazardous waste container, notify your supervisor or Shell contact.

Let me know if you have any additional questions,

Michael Monson

Staff Engineer - Environmental

Martinez Refinery, 3485 Pacheco Blvd, Martinez CA 94553

Phone: 925-313-5516

Email: michael.monson@shell.com

Internet: http://www.shelloilproductsus.com/

BRAND LEARNING NETWORK

Are you having difficulties with a BLN course? **CLICK HERE** to download our **FAQ**

Home | Current Activities | Completed Activities | Ask | My Profile | Instructor's Only | Manager's Only

JOAQUIN RODRIGUEZ Logout

My Assignments

Show All | Education Plans | Curricula | eLearning | To Do | Schedule

Showing 1 to 20 of 20

Course	Brand SUP Leading by Example
Course	0248 Brand Harassment Training (2013)
Course	0248 Tesoro/Shell Brand EHS Globally Harmonized System (2013) Compliance Training
Course	Brand SUP Managing By Walking Around
Course	Brand SUP Coaching to Improve Performance
Course	Brand SUP Communicating Policies and Procedures
Course	Brand SUP HR Orientation (2013)
Course	Brand SUP Supervisor Administration Procedures
Course	Brand SUP The First Five Things a Supervisor Should Know_
Course	Brand SUP Safe Work Planning (rev2014)
Course	Brand SUP HR Orientation (rev2014)
Course	Brand SUP Understanding What Went Wrong
Course	Brand SUP Reporting Recording and Investigating Incidents for Supervisors (rev2014)
Course	Brand SUP The Power of Questions
Course	Brand SUP Setting Expectations
Course	Brand SUP Supervisor Safety Overview (rev2014)
Course	Brand SUP Effective Safety Meetings
Course	Brand SUP The First Five Things a Supervisor Should Know
Course	Brand SUP Managing Suggestions
Course	Brand SUP Handling Customer Complaints

Sort by ... Date

Show content ...

... with title containing:

... currently: in any state

... in Curriculum:

... in Education Plan:

... between:

and:

CLICK HERE TO EMAIL US

© 2014 BEIS - All rights reserved.

JOAQUIN RODRIGUEZ | Logout | Contact Us

Building Brand for the Future... NOW

Question? Click Here to email us >>> BLN.TRAIN@BEIS.COM

BRAND LEARNING NETWORK

Are you having difficulties with a BLN course? **CLICK HERE** to download our **FAQ**

Home | Current Activities | Completed Activities | Ask | My Profile | Instructor's Only | Manager's Only

CHAD TIMOTHY OWENS Logout

My Assignments

Show All | Education Plans | Curricula | eLearning | To Do | Schedule

Showing 1 to 24 of 24

Course	BLN Introduction to the Brand Learning Network
Course	Brand IT Information Technology Orientation (2013)
Course	Brand IT PC Security Awareness
Course	Brand EHS New Employee Orientation (2015) BESTHC2
Course	Brand EHS Confined Space Entry Compliance Training (2015) BESTHC2
Course	Brand EHS Hazard Communication and Globally Harmonized System (2015) BESTHC2
Course	Brand EHS Lockout Tagout Control of Hazardous Energy Compliance Training (2015) BESTHC2
Course	Brand EHS Scaffold User and Inspection Compliance Training (2015) BESTHC2
Course	Brand SUP The First Five Things a Supervisor Should Know
Course	Brand SUP Supervisor Safety Overview (rev2014)
Course	Brand SUP Safe Work Planning (rev2014)
Course	Brand SUP Reporting Recording and Investigating Incidents for Supervisors (rev2014)
Course	Brand SUP HR Orientation (rev2014)
Course	Brand SUP Supervisor Administration Procedures
Course	Brand SUP Coaching to Improve Performance
Course	Brand SUP Communicating Policies and Procedures
Course	Brand SUP Effective Safety Meetings
Course	Brand SUP Handling Customer Complaints
Course	Brand SUP Leading by Example
Course	Brand SUP Managing By Walking Around
Course	Brand SUP Managing Suggestions
Course	Brand SUP Setting Expectations
Course	Brand SUP The Power of Questions
Course	Brand SUP Understanding What Went Wrong

Sort by ...
Date

Show content ...

... with title containing:

... currently:
In any state

... in Curriculum:

... in Education Plan:

... between:

and:

CLICK HERE TO EMAIL US

© 2014 BEIS - All rights reserved.

CHAD TIMOTHY OWENS | Logout | Contact Us

Building Brand for the Future... NOW

Question? Click Here to email us >>> **BLN.TRAIN@BEIS.COM**

STATE OF CALIFORNIA

DEPARTMENT OF INDUSTRIAL RELATIONS

CALIFORNIA APPRENTICESHIP COUNCIL

Certificate of Completion of Apprenticeship

Chad Owens

Painter

Having satisfactorily completed training in accordance with apprenticeship standards is awarded this certificate attesting to the achievement of the skills and knowledge required of a journeyman.

November 16, 2010

California Apprenticeship Council

Apprenticeship Program Sponsor

Official

School Representative

Chairman

Secretary

Administrator of Apprenticeship

DAS FORM 48

OSP 07 99780

ED_001593_00016387

To: Lin, Sharon[Lin.Sharon@epa.gov]
Cc: michael.monson@shell.com[michael.monson@shell.com]; Natalie.Braden@shell.com[Natalie.Braden@shell.com]
From: michael.monson@shell.com
Sent: Tue 4/7/2015 3:18:22 PM
Subject: Petroleum Refining Waste Codes

Sharon,

See table below for a description of the types of K wastes generated at Martinez.

Waste Code	Description	
K048	Dissolved air flotation (DAF) float from the petroleum refining industry.	Historically, this waste has been incinerated in the CO Boilers. However, following process changes in 2013, Martinez began closure of the storage tank (Tank 12038) and the CO Boilers. Until the remaining CO Boilers have undergone closure, Martinez will continue to send the COB Flyash as K048 waste.
K049	Slop oil emulsion solids from the petroleum refining industry.	This waste is injected into the Delayed Coker under the exclusion.
K050	Heat exchanger bundle cleaning sludge from the petroleum refining industry.	Bundle Cleaning Area sump and trenches are inspected monthly and cleaned as needed. The waste is sent to the Liquid Waste Handling Site, where solids are removed in the Shaker, before being sent to a TSDF (profile includes K050 code). Liquids are recycled into refinery processes.
K051	API separator sludge from the petroleum refining industry.	API Separator sludge is taken to the Liquid Waste Handling Site, where solids are removed in the Shake, before being sent to a TSDF (profile includes K051 code).
K052	Tank bottoms (leaded) from the petroleum refining industry.	This waste is no longer generated at Martinez.
K169	Crude oil storage tank sediment from petroleum refining operations.	This waste is periodically generated at Martinez. The sludge is centrifuged, with the crude oil being recycled to the Crude

		Unit. The solids are sent to a TSDF as K169 waste.
K170	Clarified slurry oil tank sediment and/or in-line filter/separation solids from petroleum refining operations.	This waste is periodically generated at Martinez. The sludge is centrifuged, with the oil being recycled to the Crude Unit. The solids are sent to a TSDF as K170 waste.
K171	Spent Hydrotreating catalyst from petroleum refining operations, including guard beds used to desulfurize feeds to other catalytic reactors (this listing does not include inert support media).	This waste is periodically generated at Martinez from several Hydrotreaters. Waste is sent out as K171 waste. Depending on the type of catalyst, it is either reclaimed or disposed of.
K172	Spent Hydrorefining catalyst from petroleum refining operations, including guard beds used to desulfurize feeds to other catalytic reactors (this listing does not include inert support media).	This waste is periodically generated at Martinez from the Hydrocracker. Waste is sent out as K172 waste, and is reclaimed.

Michael Monson

Staff Engineer - Environmental

Martinez Refinery, 3485 Pacheco Blvd, Martinez CA 94553

Phone: 925-313-5516

Email: michael.monson@shell.com

Internet: http://www.shelloilproductsus.com/

To: Schofield, John[Schofield.John@epa.gov]; Larry.Ramirez@dtsc.ca.gov[Larry.Ramirez@dtsc.ca.gov]; Melissa.Hagen@hsd.cccounty.us[Melissa.Hagen@hsd.cccounty.us]; Lin, Sharon[Lin.Sharon@epa.gov]
Cc: Natalie.Braden@shell.com[Natalie.Braden@shell.com]
From: michael.monson@shell.com
Sent: Tue 4/7/2015 2:17:27 PM
Subject: RE: Bundle Pad

John,

According to the contractor responsible for inspecting and cleaning the bundle pad sump, the inspection does include all trenches at the lower section, and if there is material in the trenches, it is removed. Looking at the comments on the form I sent you, it looks like material was removed from the trenches during the March inspection.

Michael Monson

Staff Engineer - Environmental

Martinez Refinery, 3485 Pacheco Blvd, Martinez CA 94553

Phone: 925-313-5516

Email: michael.monson@shell.com

Internet: http://www.shelloilproductsus.com/

From: Schofield, John [mailto:Schofield.John@epa.gov]
Sent: Thursday, April 02, 2015 9:00 AM
To: Monson, Michael J SOPUS-DMW/323; Larry.Ramirez@dtsc.ca.gov; Melissa.Hagen@hsd.cccounty.us; Lin, Sharon
Cc: Braden, Natalie A SOPUS-DMW/323
Subject: RE: Bundle Pad

Mike,

Thanks. Also there were solids also accumulated in the east most trench of the lower (east) pad. The documentation you provided did the cleanout include the east most trench?

regards,

John

****
John Schofield
U. S. Environmental Protection Agency
Region 9
Enforcement Division

Air, Waste and Toxics Branch, ENF-2-2
75 Hawthorne Street
San Francisco, CA 94105
(415) 972-3386
(415) 947-3530 (fax)
schofield.john@epa.gov
****

NOTE: This email, including any attachments, may contain material that is confidential, privileged and/or attorney work product and is for the sole use of the intended recipient. Any review, reliance or distribution by others or forwarding without expressed permission is strictly prohibited. If you are not the intended recipient, please contact the sender and delete all copies.

From: michael.monson@shell.com [mailto:michael.monson@shell.com]
Sent: Thursday, April 02, 2015 7:55 AM
To: Schofield, John; Larry.Ramirez@dtsc.ca.gov; Melissa.Hagen@hsd.cccounty.us; Lin, Sharon
Cc: Natalie.Braden@shell.com; michael.monson@shell.com
Subject: Bundle Pad

All,

I wanted to pass on information that the Maintenance Department has provided following Monday's closing meeting.

As you may recall, there are both an upper and lower section to the bundle cleaning area. After

discussion with Maintenance, the upper section is not used for cleaning heat exchanger bundles, but rather for inspection of clean bundles. All heat exchanger bundle cleaning operations take place at the lower section of the bundle cleaning area.

I've also attached the most recently completed bundle pad cleaning form, which was completed March 19. Since the upper section is not used for bundle cleaning, those trenches are not cleaned (as they do not contain K050 hazardous waste). The following text is from the Bundle Cleaning Area procedure:

6.4 ENVIRONMENTAL REQUIRMENTS

To maintain compliance with MRC's hazardous waste and recycling program, the following requirements must be followed by anyone using the bundle pad facility.

1. Permission to use the bundle pad for cleaning must be obtained from Bundle Pad Coordinator (ext 3619) or authorized CMD Supervisor.

2. The gate to the area is to be locked when the area is not in use.

3. When cleaning equipment at the pad, do the following:

A) During exchanger pad cleaning, prevent any solids from leaving the pad area. Solids removed from the exchangers are to be rinsed into the sewer trench system.

B) Prevent truck or other vehicle tires from driving over exchanger solids. If necessary, rinse tires to prevent any solids from leaving pad area.

6.5 MONTHLY CLEANING AND INSPECTION (by PSC):

To be performed monthly:

A) Inspect sewer sump for any remaining solids. If solids are present, remove solids and deliver solids to Liquid Handling Site. Solids will be prepped for injection into Coker.

B) Inspect sewer sump for operating sump pump. If excess liquid level, arrange for maintenance. Report all pump change outs to Bundle Pad Coordinator.

C) Record inspection and cleaning on attached logsheet and send to

Logistics Waste Coordinator.

Michael Monson

Staff Engineer - Environmental

Martinez Refinery, 3485 Pacheco Blvd, Martinez CA 94553

Phone: 925-313-5516

Email: michael.monson@shell.com

Internet: http://www.shelloilproductsus.com/

To: Schofield, John[Schofield.John@epa.gov]; Larry.Ramirez@dtsc.ca.gov[Larry.Ramirez@dtsc.ca.gov]; Melissa.Hagen@hsd.cccounty.us[Melissa.Hagen@hsd.cccounty.us]; Lin, Sharon[Lin.Sharon@epa.gov]
Cc: michael.monson@shell.com[michael.monson@shell.com]
From: michael.monson@shell.com
Sent: Thur 4/2/2015 11:11:23 PM
Subject: Remaining Information Requested

John,

Just wanted to send you a quick update. I'm still gathering the remaining information that had been requested, and should have it to you by the end of next week.

Michael Monson

Staff Engineer - Environmental

Martinez Refinery, 3485 Pacheco Blvd, Martinez CA 94553

Phone: 925-313-5516

Email: michael.monson@shell.com

Internet: http://www.shelloilproductsus.com/

To: Schofield, John[Schofield.John@epa.gov]; Larry.Ramirez@dtsc.ca.gov[Larry.Ramirez@dtsc.ca.gov]; Melissa.Hagen@hsd.cccounty.us[Melissa.Hagen@hsd.cccounty.us]; Lin, Sharon[Lin.Sharon@epa.gov]
Cc: Natalie.Braden@shell.com[Natalie.Braden@shell.com]; michael.monson@shell.com[michael.monson@shell.com]
From: michael.monson@shell.com
Sent: Thur 4/2/2015 3:40:15 PM
Subject: Recovered Oil, LWHS and DCU Processing Rates
RecOil_Proc_BBL15.xls
LHS_DCUFeedSource_2015.xls
DCU INJECTION 2015.xlsx

As requested, see attached processing rates for the first quarter.

Michael Monson

Staff Engineer - Environmental

Martinez Refinery, 3485 Pacheco Blvd, Martinez CA 94553

Phone: 925-313-5516

Email: michael.monson@shell.com

Internet: http://www.shelloilproductsus.com/

To: Schofield, John[Schofield.John@epa.gov]; Larry.Ramirez@dtsc.ca.gov[Larry.Ramirez@dtsc.ca.gov]; Melissa.Hagen@hsd.cccounty.us[Melissa.Hagen@hsd.cccounty.us]; Lin, Sharon[Lin.Sharon@epa.gov]
Cc: Natalie.Braden@shell.com[Natalie.Braden@shell.com]; michael.monson@shell.com[michael.monson@shell.com]
From: michael.monson@shell.com
Sent: Thur 4/2/2015 2:55:16 PM
Subject: Bundle Pad
20150331130436153.tif

All,

I wanted to pass on information that the Maintenance Department has provided following Monday's closing meeting.

As you may recall, there are both an upper and lower section to the bundle cleaning area. After discussion with Maintenance, the upper section is not used for cleaning heat exchanger bundles, but rather for inspection of clean bundles. All heat exchanger bundle cleaning operations take place at the lower section of the bundle cleaning area.

I've also attached the most recently completed bundle pad cleaning form, which was completed March 19. Since the upper section is not used for bundle cleaning, those trenches are not cleaned (as they do not contain K050 hazardous waste). The following text is from the Bundle Cleaning Area procedure:

6.4 ENVIRONMENTAL REQUIRMENTS

To maintain compliance with MRC's hazardous waste and recycling program, the following requirements must be followed by anyone using the bundle pad facility.

1. Permission to use the bundle pad for cleaning must be obtained from Bundle Pad Coordinator (ext 3619) or authorized CMD Supervisor.

2. The gate to the area is to be locked when the area is not in use.

3. When cleaning equipment at the pad, do the following:

A) During exchanger pad cleaning, prevent any solids from leaving the

pad area. Solids removed from the exchangers are to be rinsed into the sewer trench system.

B) Prevent truck or other vehicle tires from driving over exchanger solids. If necessary, rinse tires to prevent any solids from leaving pad area.

6.5 MONTHLY CLEANING AND INSPECTION (by PSC):

To be performed monthly:

A) Inspect sewer sump for any remaining solids. If solids are present, remove solids and deliver solids to Liquid Handling Site. Solids will be prepped for injection into Coker.

B) Inspect sewer sump for operating sump pump. If excess liquid level, arrange for maintenance. Report all pump change outs to Bundle Pad Coordinator.

C) Record inspection and cleaning on attached logsheet and send to Logistics Waste Coordinator.

Michael Monson

Staff Engineer - Environmental

Martinez Refinery, 3485 Pacheco Blvd, Martinez CA 94553

Phone: 925-313-5516

Email: michael.monson@shell.com

Internet: http://www.shelloilproductsus.com/

To: Kihara, Keith@DTSC[Keith.Kihara@dtsc.ca.gov]
Cc: Soria, Maria@DTSC[Maria.Soria@dtsc.ca.gov]; Lin, Sharon[Lin.Sharon@epa.gov]
From: McDaniel, Doug
Sent: Tue 4/25/2017 10:29:39 PM
Subject: Inspection Report
Appendix B Photo Log.pdf
Appendix C EPA Document Request.pdf
Appendix D DTSC MPE Exemption Letter.pdf
Appendix I Contractor Training Certs.pdf
Appendix A Site Map.pdf
img-425151408-0001.pdf
PBF Energy Torrance Refinery CEI Final Signed March 24 2017.pdf

Keith –

Enclosed are a cover letter, the Torrance inspection report and Appendices A, B, C, D and I. Appendices E, F, G, and H are claimed CBI and will be sent directly by the company.

Thanks,

Doug

Douglas K. McDaniel

Chief, Waste and Chemical Section

Enforcement Division

U.S. EPA Region 9

(415) 947-4106

Appendix A

Facility Site Map