Weston Solutions, Inc.
Suite 201
1090 King Georges Post Road
Edison, New Jersey 08837-3703
732-585-4400 • Fax: 732-225-7037
www.westonsolutions.com

The Trusted Integrator for Sustainable Solutions

REMOVAL SUPPORT TEAM 3
EPA CONTRACT EP-S2-14-01

August 6, 2015

Eric Daly, On-Scene Coordinator
U.S. Environmental Protection Agency
Response & Prevention Branch
2890 Woodbridge Avenue
Edison, NJ 08837

EPA CONTRACT NO: EP-S2-14-01
TDD NO: TO-0006-0064
DOCUMENT CONTROL NO: RST3-02-D-0037
SUBJECT: SITE-SPECIFIC UFP QUALITY ASSURANCE PROJECT PLAN
HOLY TRINITY CEMETERY SITE

Dear Mr. Daly,

Enclosed please find the Site-Specific UFP Quality Assurance Project Plan (QAPP) for the radiological survey, air sampling, and soil sampling event to be conducted at the Holy Trinity Cemetery Site located in Lewiston, Niagara County, New York, from August 10 through 14, 2015.

If you have any questions or comments, please do not hesitate to contact me at (732) 585-4413

Sincerely,

Weston Solutions, Inc.

Bernard Nwosu
RST 3 Site Project Manager

Enclosure
cc: TDD File No.: TO-0006-0064

SITE-SPECIFIC UFP QUALITY ASSURANCE PROJECT PLAN
HOLY TRINITY CEMETERY SITE
LEWISTON, NIAGARA COUNTY, NEW YORK

Prepared By:

Removal Support Team 3
Weston Solutions, Inc.
Engineering, Science, and Technology Division
Edison, New Jersey 08837

DC No.: RST3-02-D-0037
TDD No.: TO-0006-0064
EPA Contract No.: EP-S2-14-01

August 2015

TABLE OF CONTENTS

CROSSWALK 1
QAPP Worksheet #1: Title and Approval Page 4
QAPP Worksheet #2 QAPP Identifying Information 5
QAPP Worksheet #3: Distribution List 6
QAPP Worksheet #4: Project Personnel Sign-Off Sheet 7
QAPP Worksheet #5: Project Organizational Chart 8
QAPP Worksheet #6: Communication Pathways 9
QAPP Worksheet #7: Personnel Responsibilities and Qualifications Table 9
QAPP Worksheet #8: Special Personnel Training Requirements Table 10
QAPP Worksheet #9: Project Scoping Session Participants Sheet 11
QAPP Worksheet #10: Problem Definition 13
QAPP Worksheet #11: Project Quality Objectives/Systematic Planning Process Statement 17
QAPP Worksheet #12 Measurement Performance Criteria Table 20
QAPP Worksheet #13: Secondary Data Criteria and Limitations Table 29
QAPP Worksheet #14: Summary of Project Tasks 30
QAPP Worksheet #15 Reference Limits and Evaluation Table 35
QAPP Worksheet #16: Project Schedule/Timeline Table 38
QAPP Worksheet #17: Sampling Design and Rationale 39
QAPP Worksheet #18: Sampling Locations and Methods/SOP Requirements Table 41
QAPP Worksheet #19: Analytical SOP Requirements Table 42
QAPP Worksheet #20: Field Quality Control Sample Summary Table 44
QAPP Worksheet #21: Project Sampling SOP References Table 45
QAPP Worksheet #22: Field Equipment Calibration, Maintenance, Testing, and Inspection Table 46
QAPP Worksheet #23: Analytical SOP References Table 47
QAPP Worksheet #24: Analytical Instrument Calibration Table 49
QAPP Worksheet #25: Analytical Instrument and Equipment Maintenance, Testing, and Inspection Table 51
QAPP Worksheet #26: Sample Handling System 53
QAPP Worksheet #27: Sample Custody Requirements 54
QAPP Worksheet #28 QC Sample Table 56
QAPP Worksheet #29: Project Documents and Records Table 67
QAPP Worksheet #30: Analytical Services Table 68
QAPP Worksheet #31: Planned Project Assessments Table 69
QAPP Worksheet #32: Assessment Findings and Corrective Action Responses 70
QAPP Worksheet #33: QA Management Reports Table 71
QAPP Worksheet #34: Verification (Step I) Process Table 72
QAPP Worksheet #35: Validation (Steps IIa and IIb) Process Table 73
QAPP Worksheet #36 Validation (Steps IIa and IIb) Summary Table 74
QAPP Worksheet #37: Usability Assessment 75

Attachment A - Site Location Map
Attachment B - Sampling SOPs Nos. 2001, 2012, 2050
Attachment C - Protocol for Conduction Radon and Radon Decay Product Measurements in Multifamily Buildings

LIST OF ACRONYMS

ADR Automated Data Review
ANSETS Analytical Services Tracking System
AOC Acknowledgment of Completion
ASTM American Society for Testing and Materials
CEO Chief Executive Officer
CERCLA Comprehensive Environmental Response, Compensation and Liability Act
CLP Contract Laboratory Program
CFM Contract Financial Manager
CO Contract Officer
COI Conflict of Interest
COO Chief Operations Officer
CRDL Contract Required Detection Limit
CRTL Core Response Team Leader
CRQL Contract Required Quantitation Limit
CQLOSS Corporate Quality Leadership and Operations Support Services
CWA Clean Water Act
DCN Document Control Number
DESA Division of Environmental Science and Assessment
DI Deionized Water
DPO Deputy Project Officer
DQI Data Quality Indicator
DQO Data Quality Objective
EM Equipment Manager
EDD Electronic Data deliverable
ENVL Environmental Unit Leader
EPA Environmental Protection Agency
ERT Environmental Response Team
FASTAC Field and Analytical Services Teaming Advisory Committee
GC/ECD Gas Chromatography/Electron Capture Detector
GC/MS Gas Chromatography/Mass Spectrometry
HASP Health and Safety Plan
HRS Hazard Ranking System
HSO Health and Safety Officer
ITM Information Technology Manager
LEL Lower Explosive Limit
MSA Mine Safety Appliances
MS/MSD Matrix Spike/Matrix Spike Duplicate
NELAC National Environmental Laboratory Accreditation Conference
NELAP National Environmental Laboratory Accreditation Program
NIOSH National Institute for Occupational Safety and Health
NIST National Institute of Standards and Technology
OSC On-Scene Coordinator
OSHA Occupational Safety and Health Administration

LIST OF ACRONYMS (Concluded)

OSWER Office of Solid Waste and Emergency Response
PARCCS Precision, Accuracy, Representativeness, Completeness, Comparability, Sensitivity
PAH Polynuclear Aromatic Hydrocarbons
PCB Polychlorinated Biphenyls
PIO Public Information Officer
PM Program Manager
PO Project Officer
PRP Potentially Responsible Party
PT Proficiency Testing
QA Quality Assurance
QAL Quality Assurance Leader
QAPP Quality Assurance Project Plan
QMP Quality Management Plan
QA/QC Quality Assurance/Quality Control
QC Quality Control
RC Readiness Coordinator
RCRA Resource Conservation and Recovery Act
RPD Relative Percent Difference
RSCC Regional Sample Control Coordinator
RST Removal Support Team
SARA Superfund Amendments and Reauthorization Act
SEDD Staged Electronic Data Deliverable
SOP Standard Operating Practice
SOW Statement of Work
SPM Site Project Manager
START Superfund Technical Assessment and Response Team
STR Sampling Trip Report
TAL Target Analyte List
TCL Total Compound List
TDD Technical Direction Document
TDL Technical Direction Letter
TO Task Order
TQM Total Quality Management
TSCA Toxic Substances Control Act
UFP Uniform Federal Policy
VOA Volatile Organic Analysis

CROSSWALK

THE FOLLOWING TABLE PROVIDES A "CROSS-walk" between the QAPP elements outlined in the Uniform Federal Policy for Quality Assurance Project Plans (UFP-QAPP Manual), the necessar y information, and the location of the information within the text document and corresponding QAPP Workshee t. Any QAPP elements and required information that are not applicable to the project are circled.

QAPP Element(s) and Corresponding Section(s) of UFP-QAPP Manual		Required Information	Crosswalk to QAPP Section	Crosswalk to QAPP Worksheet No.
Project Management and Objectives				
2.1	Title and Approval Page	- Title and Approval Page	Approval Page	1
2.2	Document Format and Table of Contents 2.2.1 Document Control Format 2.2.2 Document Control Numbering System 2.2.3 Table of Contents 2.2.4 QAPP Identifying Information	- Table of Contents - QAPP Identifying Information	TOC Approval Page	2
2.3	Distribution List and Project Personnel Sign-Off Sheet 2.3.1 Distribution List 2.3.2 Project Personnel Sign-Off Sheet	- Distribution List - Project Personnel Sign-Off Sheet	Approval Page	3 4
2.4	Project Organization 2.4.1 Project Organizational Chart 2.4.2 Communication Pathways 2.4.3 Personnel Responsibilities and Qualifications 2.4.4 Special Training Requirements and Certification	- Project Organizational Chart - Communication Pathways - Personnel Responsibilities and Qualifications - Special Personnel Training Requirements	2	5 6 7 8
2.5	Project Planning/Problem Definition 2.5.1 Project Planning (Scoping) 2.5.2 Problem Definition, Site History, and Background	- Project Planning Session Documentation (including Data Needs tables) - Project Scoping Session Participants Sheet - Problem Definition, Site History, and Background - Site Maps (historical and present)	1	9 10
2.6	Project Quality Objectives and Measurement Performance Criteria 2.6.1 Development of Project Quality Objectives Using the Systematic Planning Process 2.6.2 Measurement Performance Criteria	- Site-Specific PQOs - Measurement Performance Criteria	3	11 12
2.7	Secondary Data Evaluation	- Sources of Secondary Data and Information - Secondary Data Criteria and Limitations	1 2	13

QAPP Element(s) and Corresponding Section(s) of UFP-QAPP Manual	Required Information	Crosswalk to QAPP Section	Crosswalk to QAPP Worksheet No.
2.8 Project Overview and Schedule 2.8.1 Project Overview 2.8.2 Project Schedule	- Summary of Project Tasks - Reference Limits and Evaluation - Project Schedule/Timeline	4	14 15 16
Measurement/Data Acquisition			
3.1 Sampling Tasks 3.1.1 Sampling Process Design and Rationale 3.1.2 Sampling Procedures and Requirements 3.1.2.1 Sampling Collection Procedures 3.1.2.2 Sample Containers, Volume, and Preservation 3.1.2.3 Equipment/Sample Containers Cleaning and Decontamination Procedures 3.1.2.4 Field Equipment Calibration, Maintenance, Testing, and Inspection Procedures 3.1.2.5 Supply Inspection and Acceptance Procedures 3.1.2.6 Field Documentation Procedures	- Sampling Design and Rationale - Sample Location Map - Sampling Locations and Methods/SOP Requirements - Analytical Methods/SOP Requirements - Field Quality Control Sample Summary - Sampling SOPs - Project Sampling SOP References - Field Equipment Calibration, Maintenance, Testing, and Inspection	5	17 18 19 20 21 22
3.2 Analytical Tasks 3.2.1 Analytical SOPs 3.2.2 Analytical Instrument Calibration Procedures 3.2.3 Analytical Instrument and Equipment Maintenance, Testing, and Inspection Procedures 3.2.4 Analytical Supply Inspection and Acceptance Procedures	- Analytical SOPs - Analytical SOP References - Analytical Instrument Calibration - Analytical Instrument and Equipment Maintenance, Testing, and Inspection	6	23 24 25
3.3 Sample Collection Documentation, Handling, Tracking, and Custody Procedures 3.3.1 Sample Collection Documentation 3.3.2 Sample Handling and Tracking System 3.3.3 Sample Custody	- Sample Collection Documentation Handling, Tracking, and Custody SOPs - Sample Container Identification - Sample Handling Flow Diagram - Example Chain-of-Custody Form and Seal	7	26 27
3.4 Quality Control Samples 3.4.1 Sampling Quality Control Samples 3.4.2 Analytical Quality Control Samples	- QC Samples - Screening/Confirmatory Analysis Decision Tree	5	28

QAPP Element(s) and Corresponding Section(s) of UFP-QAPP Manual	Required Information	Crosswalk to QAPP Section	Crosswalk to QAPP Worksheet No.
3.5 Data Management Tasks 3.5.1 Project Documentation and Records 3.5.2 Data Package Deliverables 3.5.3 Data Reporting Formats 3.5.4 Data Handling and Management 3.5.5 Data Tracking and Control	- Project Documents and Records - Analytical Services - Data Management SOPs	6	29 30
Assessment/Oversight			
4.1 Assessments and Response Actions 4.1.1 Planned Assessments 4.1.2 Assessment Findings and Corrective Action Responses	- Assessments and Response Actions - Planned Project Assessments - Audit Checklists - Assessment Findings and Corrective Action Responses	8	31 32
4.2 QA Management Reports	- QA Management Reports		33
4.3 Final Project Report	- Final Report(s)		
Data Review			
5.1 Overview			
5.2 Data Review Steps 5.2.1 Step I: Verification 5.2.2 Step II: Validation 5.2.2.1 Step IIa Validation Activities 5.2.2.2 Step IIb Validation Activities 5.2.3 Step III: Usability Assessment 5.2.3.1 Data Limitations and Actions from Usability Assessment 5.2.3.2 Activities	- Verification (Step I) Process - Validation (Steps IIa and IIb) Process - Validation (Steps IIa and IIb) Summary - Usability Assessment	9	34 35 36 37

QAPP Worksheet #1: Title and Approval Page

Title: Site-Specific UFP Quality Assurance Project Plan
Site Name/Project Name: Holy Trinity Cemetery Site
Site Location: Lewiston, Niagara County, New York
Revision Number: 00
Revision Date: Not Applicable

Weston Solutions, Inc.
Lead Organization

Joel Petty
Weston Solutions, Inc.
1090 King Georges Post Road, Suite 201
Edison, NJ 08837
Email: joel.petty@westonsolutions.com

Preparer's Name and Organizational Affiliation

6 August 2015
Preparation Date (Day/Month/Year)

Site Project Manager: Joel Petty
FOR Signature

FOR Bernard Nwosu/Weston Solutions, Inc.
Printed Name/Organization/Date

QA Officer/Technical Reviewer: Smita Sumbaly
Signature

Smita Sumbaly/Weston Solution, Inc.
Printed Name/Organization/Date

EPA, Region II On-Scene Coordinator (OSC): Eric M. Daly
Signature

Eric Daly/EPA, Region II
Printed Name/Organization/Date

EPA, Region II Quality Assurance Officer (QAO):
Signature

Printed Name/Organization/Date

Document Control Number: RST3-02-D-0037

QAPP Worksheet #2
QAPP Identifying Information

Site Name/Project Name: Holy Trinity Cemetery Site
Site Location: Lewiston, Niagara County, New York
Operable Unit: 00
Title: Site-Specific UFP Quality Assurance Project Plan
Revision Number: 00
Revision Date: Not Applicable

1. Identify guidance used to prepare QAPP:
Uniform Federal Policy for Quality Assurance Project Plans. Refer to Laboratory Methods.

2. Identify regulatory program: EPA, Region II

3. Identify approval entity: EPA, Region II

4. Indicate whether the QAPP is a generic or a site-specific QAPP.

5. List dates of scoping sessions that were held:7/13/2015, 7/27/2015

6. List dates and titles of QAPP documents written for previous site work, if applicable:

Not applicable

7. List organizational partners (stakeholders) and connection with lead organization:

None

8. List data users: EPA, Region II (see Worksheet #4 for individuals)

9. If any required QAPP elements and required information are not applicable to the project, then provide an explanation for their exclusion below: None

10. Document Control Number: RST3-02-D-0037

QAPP Worksheet #3: Distribution List

[List those entities to which copies of the approved site-specific QAPP, subsequent QAPP revisions, addenda, and amendments are sent]

QAPP Recipient	Title	Organization	Telephone Number	Fax Number	E-mail Address	Document Control Number
Eric Daly	On-Scene Coordinator	EPA, Region II	(732) 321-4350	(732) 321-4350	Daly.Eric@epa.epamail.gov	RST 3-02-D-0037
Bernard Nwosu	Site Project Manager	Weston Solutions, Inc., RST 3	(908) 565-2980	(732) 225-7037	Ben.Nwosu@westonsolutions.com	RST 3-02-D-0037
Smita Sumbaly	QA Officer	Weston Solutions, Inc., RST 3	(732) 585-4410	(732) 225-7037	S.Sumbaly@westonsolutions.com	RST 3-02-D-0037
Site TDD File	RST 3 Site TDD File	Weston Solutions, Inc., RST 3	Not Applicable	Not Applicable	Not Applicable	-

QAPP Worksheet #4: Project Personnel Sign-Off Sheet

[Copies of this form signed by key project personnel from each organization to indicate that they have read the applicable sections of the site-specific QAPP and will perform the tasks as described; add additional sheets as required. Ask each organization to forward signed sheets to the central project file.]

Organization: Weston Solutions, Inc., RST 3

Project Personnel	Title	Telephone Number	Signature	Date QAPP Read
Eric Daly	EPA OSC	(732) 321-4350	Eric M. Daly	08/06/2015
Bernard Nwosu	Site Project Manager, RST 3	(732) 585-4413	Bernard Nwosu	8/6/15
Smita Sumbaly	QAO, RST 3	(732) 585-4410	Smita Sumbaly	8/6/15
Timothy Benton	Operations Leader / HSO, RST 3	(732) 585-4425	[illegible]	8/6/15
Joel Petty	Field Personnel, RST 3	(732) 585-4421	Joel Petty	8/6/15
Peter Lisichenko	Field Personnel, RST 3	(732) 585-4411	[illegible]	8/11/15
Robert Croskey	Field Personnel, RST 3	(732) 585-4412	[illegible]	8.10.15
Lionel Martinez	RST 3		[illegible]	

QAPP Worksheet #5: Project Organizational Chart

Identify reporting relationship between all organizations involved in the project, including the lead organization and all contractor and subcontractor organizations. Identify the organizations providing field sampling, on-site and off-site analysis, and data review services, including the names and telephone numbers of all project managers, project team members, and/or project contacts for each organization.

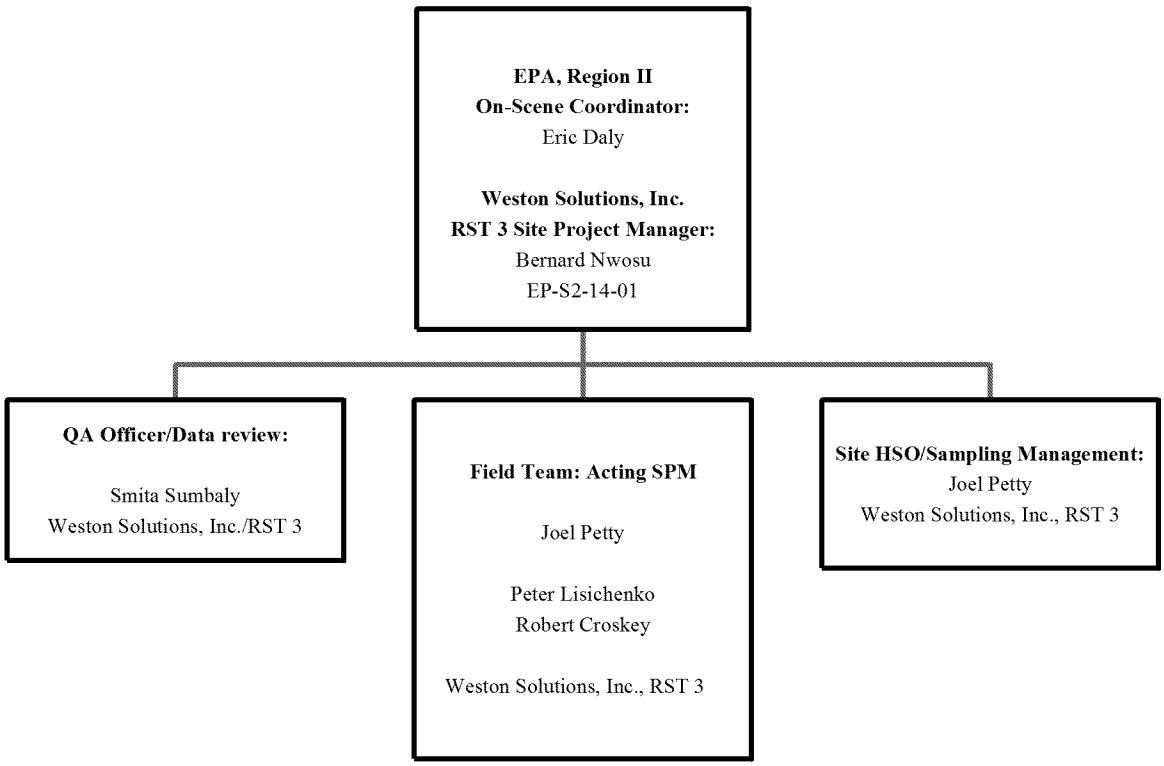

Acronyms:

SPM: Site Project Manager
HSO: Health & Safety Officer

QAPP Worksheet #6: Communication Pathways

Communication Drivers	Responsible Entity	Name	Phone Number	Procedure
Point of contact with EPA OSC	Acting Site Project Manager, Weston Solutions, Inc., RST 3	Joel Petty, Acting SPM	(732) 585-4421	All technical, QA and decision-making matters in regard to the project (verbal, written or electronic)
Adjustments to QAPP	Acting Site Project Manager, Weston Solutions, Inc., RST 3	Joel Petty, Acting SPM	(732) 585-4421	QAPP approval dialogue
Health and Safety On-Site Meeting	HSO, Weston Solutions, Inc., RST 3	Joel Petty, Acting SPM	(732) 585-4421	Explain Site hazards, personnel protective equipment, hospital location, etc.

OSC: On-Scene Coordinator
SPM: Site Project Manager
HSO: Health and Safety Officer

QAPP Worksheet #7: Personnel Responsibilities and Qualifications Table

Name	Title	Organizational Affiliation	Responsibilities	Education and Experience Qualifications
Eric Daly	EPA On-Scene Coordinator	EPA, Region II	All project coordination, direction and decision making.	NA
Joel Petty	Field Personnel, RST 3	Weston Solutions, Inc.	Acting Site Project Manager/ HSO / EPA point of contact	5+ Years
Peter Lisichenko	Field Personnel, RST 3	Weston Solutions, Inc.	Radiological survey and sample collection	10+ Years
Robert Croskey	Field Personnel, RST 3	Weston Solutions, Inc.	Radiological survey and sample collection	5+Years

*All RST 3 members, including subcontractor's resumes are in possession of RST 3 Program Manager, EPA Project Officer, and Contracting officers.

QAPP Worksheet #8: Special Personnel Training Requirements Table

Project Function	Specialized Training By Title or Description of Course	Training Provider	Training Date	Personnel / Groups Receiving Training	Personnel Titles / Organizational Affiliation	Location of Training Records / Certificates[1]
[Specify location of training records and certificates for samplers]						
QAPP Training	This training is presented to all RST 3 personnel to introduce the provisions, requirements, and responsibilities detailed in the UFP QAPP. The training presents the relationship between the site-specific QA Project Plans (QAPPs), SOPs, work plans, and the Generic QAPP. QAPP refresher training will be presented to all employees following a major QAPP revision.	Weston Solutions, Inc., QAO	As needed	All RST 3 field personnel upon initial employment and as refresher training	Weston Solutions, Inc.	Weston Solutions, Inc., EHS Database
Health and Safety Training	Health and safety training will be provided to ensure compliance with Occupational Safety and Health Administration (OSHA) as established in 29 CFR 1910.120.	Weston Solutions, Inc., HSO	Yearly at a minimum	All Employees upon initial employment and as refresher training every year	Weston Solutions, Inc.	Weston Solutions, Inc., EHS Database
Others	Scribe, ICS 100 and 200, and Air Monitoring Equipment Trainings provided to all employees	Weston Solutions, Inc., QAO/Group Leader's	Upon initial employment and as needed			
	Dangerous Goods Shipping	Weston Solutions, Inc., HSO	Every 2 years			

All team members are trained in the concepts and procedures in recognizing opportunities for continual improvement, and the approaches required to improve procedures while maintaining conformance with legal, technical, and contractual obligations.

[1] All RST 3 members, including subcontractor's certifications are in possession of RST 3 HSO.

QAPP Worksheet #9: Project Scoping Session Participants Sheet

Site Name/Project Name: Holy Trinity Cemetery Site
Site Location: Lewiston, Niagara County, New York
Operable Unit: 00
Date of Sessions: 7/13/2015, 7/27/2015
Scoping Session Purpose: To discuss questions, comments, and assumptions regarding technical issues involved with the sampling activities.

Name	Title	Affiliation	Phone #	E-mail Address	*Project Role
Eric Daly	EPA OSC	EPA, Region II	(732) 321-4350	Daly.Eric@ epa.epamail.gov	OSC
Bernard Nwosu	Site Project Manager	Weston Solutions, Inc., RST 3	(908) 565-2980	ben.nwosu@ westonsolutions.com	Site Project Management/ QA Officer/ Technical Reviewer
Timothy Benton	HSO	Weston Solutions, Inc., RST 3	(732) 585-4425	tim.benton@ westonsolutions.com	Health and Safety

Comments/Decisions: As part of the Removal Assessment of the Holy Trinity Cemetery Site (the Site), Weston Solutions, Inc., Removal Support Team 3 (RST 3) has been tasked with providing support to the U.S. Environmental Protection Agency (EPA) for a ground radiological survey a nd subcontracting a National Radon Proficiency Program (NRP P)-certified company to conduct radon sampling at the Site. In addition, RST 3 has been tasked with collecting soil samples from locations that will be determined on-site based on results of the radiological surveys and at the discretion of the EPA On-Scene Coordinator (OSC). The radiological survey is being conducted to determine the presence or absence of radon/thoron gas and gamma radiation. The radiological survey will be conducted using a Durridge RAD7 radon/thoron detector, Ludlum-2241, Fluke Pressurized Ionization Chamber (PIC) Model 451P, Reuter-Stokes RSS-131ER High Pressure Ion Chamber (HPIC), and BNC SAM 940 gamma detectors. The radon specialist from the NR PP-certified company will provide field support in identifying radon canister placement in up to 15 locations using guidelines set forth in the American National Standards Institute (ANSI)/ American Association of Radon Scientists and Technologists (AARST) *Protocol for Conducting Radon and Radon Decay Product Measurements in Multifamily Buildings* (MAMF 2012), placing the canisters, picking up the canisters, and delivering to a private laboratory for radon analysis. Soil sampling will be conducted using Geoprobe® services and dedicated disposable scoops. Up to six soil samples will be collected from five sampling locations. A total of five soil samples, including one field duplicate, will be collected from

QAPP Worksheet #9: Project Scoping Session Participants Sheet (concluded)

Comments/Decisions: on-site locations suspected to contain radionuclides and metals/metalloids and one soil sample will be collected from a location determined to be outside the site's footprint of historical activities in order to document background conditions. The soil samples will be collected to determine the concentrations of radionuclides and metals/metalloids in the soil present on the Site. Rinsate blank samples will be collected as needed to demonstrate the effectiveness of the decontamination procedure of the Geoprobe® cutting shoe. The soil and rinsate (aqueous) samples will be submitted to an RST 3-procured laboratory for target analyte list (TAL) metal, including mercury, isotopic thorium (thorium-228, thorium-230, and thorium-232), isotopic uranium (uranium-233/234, uranium-235/236, and uranium-238), radium-226, radium-228, and gamma spectroscopy analyses. The soil samples will be collected for a definitive data quality assurance/quality control (QA/QC) objective. Field duplicate and matrix spike/matrix spike duplicate (MS/MSD) samples will be collected at a rate of one per twenty soil samples.

Consensus Decisions: The Removal Assessment activities are scheduled to begin on August 10, 2015.

Action Items: A CLP Request Form and the RST 3 Analytical Service Request Forms were submitted by RST 3 on July 27, 2015.

QAPP Worksheet #10: Problem Definition

PROBLEM DEFINITION

Uranium (half-life of 4.5 billion years) is a naturally occurring radioactive isotope, decaying primarily by alpha emission with accompanying gamma. Uranium produces several radioactive isotopes including radium-226 (Ra-226) and radon-222 (Rn-222), which have a half-life of 1,602 years and 3.8 days, respectively. Rn-222 is a radioactive isotope which naturally forms as a g as, producing several radioactive radon decay products, including polonium-218, lead-214, bismuth-214, and polonium-214.

Thorium (half-life of 14 billion years) is a naturally occurring radioactive isotope, decaying primarily by alpha emissions with accompanying gamma. Thorium produces several radioactive isotopes, including gamma emitting actinium-228 (Ac-228), lead-212 (Pb-212), bismuth-212 (Bi-212), radium-224 (Ra-224), and thoron-220 gas (Rn-220). Ra-224 and Rn-220 have a half-life of 3.6 days and 55 seconds, respectively.

The U.S. Department of Health and Human Services ' (HHS) Agency for Toxic Substances and Diseases Registry (ATSDR) has established that long-term exposure to gamma radiation poses a health risk and radon gases in air can buildup in the lungs with the potential to cause lung cancer after prolonged exposure.

A Removal Assessment is being conducted by EPA to determine the presence or absence of radon/thoron gas and gamma radiation through radiological surveys, to ascertain the concentration of radioactive gasses, specifically radon and thoron, being emitted at the Site, and to verify the presence of residual contamination and potential releases of radiation-containing material in soil associated with the Site.

SITE HISTORY/CONDITIONS

The Holy Trinity Cemetery Site (the Site) [U.S. Environmental Protection Agency (EPA) ID No. NYN000206698] consists of an area of radionuclide contamination located at a cemetery which is approximately 31.5 acres in Lewiston, New York. The Site is owned by Holy Trinity Cemetery, which has 2.91 acres of observed contamination located in the northernmost portion of the property on a relatively flat and slightly elevated grassy field, as well as on exist ing roadbeds. There is one building on the Site which is utilized both as a residence and cemetery maintenance facility. The Site is bordered to the north and east by Interstate 190; to the south by another cemetery; and to the west by Robert Avenue and a residential area.

In a 1978 U.S. Department of Energy (DOE) aerial radiological survey, more than 15 properties throughout the region were identified as having elevated levels of radiation above background. It is believed that in the early 1960s slag from the local Union Carbide facility was used as fill on the properties prior to paving. The slag contained sufficient quantities of uranium and thorium to be classified as a licensable radioactive source material. Union Carbide subsequently obtained a license from the Atomic Energy Commission (AEC) [now the Nuclear Regulatory Commission (NRC)] and the State of New York; however, the slag had been used as fill throughout the

QAPP Worksheet #10: Problem Definition (Continued)

Niagara Falls region prior to licensing. Based on the original survey and subsequent investigations, it is believed that the radioactive Union Carbide slag was deposited at the Site.

In February 1980, the New York State Department of Health (NYSDOH) Bureau of Radiological Health and the Niagara County Health Department conducted a radiological survey of the Site to identify areas of elevated radioactivity as a result of radioactive slag having been used on the property for fill. The survey was conducted based on information that the slag used at the cemetery was from the same source used at two other locations in nearby Niagara Falls, which had been identified by the NYSDOH as containing elevated levels of radioactivity. During the survey, cemetery personnel showed NYSDOH a slag pile located near the caretaker's garage in the western portion of the property. Cemetery personnel stated that this slag was used as fill for the cemetery roads throughout the property.

Additionally, the slag was used as fill for the base of two proposed roadbeds that extended approximately 500 to 600 feet from the caretaker's garage, northwest toward Robert Avenue. At the time of the survey, the construction of these roads had been abandoned. The underlying slag base was covered with an unknown amount of soil and was left as an open field. Using an Eberline PRM 7 radiation meter, radioactivity of the slag pile was measured at 250 microroentgens per hour (μR/hr) and readings along cemetery roads ranged from 5 μR/hr (*i.e.,* background concentration) to 30 μR/hr. Readings along the abandoned roadbeds ranged from 200 μR/hr to 400 μR/hr. Samples of the slag were collected as part of the investigation. Laboratory analyses of the samples indicated detectable concentrations of potassium-40, uranium-235 and -238, radium-226, thorium-232, and one other isotope.

In October 2006, the New York State Department of Environmental Conservation (NYSDEC) and the Niagara County Health Department conducted a reconnaissance of the Site. At that time, the slag pile that previously had been observed near the caret aker's garage was no longer on the Site; the current caretaker had neither knowledge of the slag pile, nor what happened to it. The caretaker also indicated that children living nearby use this area for recreation. Since the 1980 NYSDOH site investigation, trees had grown through the abandoned slag roadbeds, pushing the slag to the surface. As part of the site visit, NYSDEC conducted a radioactivity survey with an Exploranium GR-135. Readings taken while walking along the roadbed indicated levels of 200 μR/hr to 450 μR/hr at waist height and a surface contact reading of 450 μR/hr to 570 μR/hr; a contact reading of 700 μR/hr at exposed slag near a tree was also documented. NYSDEC collected four samples of the slag which were analyzed for isotopic uranium and isotopic thorium, and underwent gamma-ray spectroscopy analysis. Laboratory analytical result s indicated the presence of uranium-238/234 ranging from 114 picocuries per gram (pCi/g) to 1,664 pCi/g and thorium-232 ranging from 114 pCi/g to 898 pCi/g.

In May 2007, NYSDEC visited the Site to identify contamination in an on-site debris pile using gamma-ray spectroscopy. During a 5-minute static reading, radium-226 was the only nuclide identified. A similar analysis was also conducted on one of the roadbeds confirming the presence of thorium-232.

QAPP Worksheet #10: Problem Definition (Continued)

During a reconnaissance performed by the NYSDOH and NYSDEC in July 2013, screening activities at the Site along the roadway and along the back roadway leading off site showed radiation levels up to 51 μR/hr in the roadway with the pressurized ion chamber (PIC) and up to 50,000 counts per minute (cpm) with the sodium iodide (NaI) 2x2 detector.

On December 12 and 13, 2013, Weston Solutions, Inc., Site Assessment Team (SAT) personnel collected a total of 14 subsurface soil samples and three slag samples from the Site. Soil samples were also collected from two locations suspected to be outside the influence of the area of observed contamination to document background conditions. At each sample location, soil samples were collected directly beneath slag material; at locations where a radioactive layer was not visually observed to be present, the soil sample was collected at the equivalent depth interval. The slag samples each consisted of one single piece of slag. The soil samples were analyzed b y TestAmerica Laboratories for target analyte list (TAL) metals analysis; isotopic thorium, isotopic uranium, radium-226, and radium-228 by alpha spectroscopy; and radioisotopes by gamma spectroscopy. The slag samples were analyzed for the same parameters, with the exception of TAL metals analysis. One soil sample for TAL metals analysis was designated as a matrix spike/matrix spike duplicate (MS/MSD) sample for quality assurance/quality control (QA/QC) purposes. One rinsate blank was collected to demonstrate adequate decontamination of non-dedicated sampling equipment (*i.e.,* cutting shoe). Analytical results indicate concentrations of radionuclides in all slag samples and seven soil samples (including the field duplicate) to be significantly higher than at background conditions.

On May 1, 2014, SAT personnel collected radon and thoron concentration measurements from locations on and in the vicinity of the Site. At the selected locations in background areas, above the source material, and off the source area, radon and thoron concentration measurements in pCi/L were collected with RAD7 radon detectors. The radon and thoron measurements were collected at heights of one meter above the ground surface. The measurements included uncertainty values, which were taken into account to calculate adjusted concentrations for evaluation of observed release in the air migration pathway. There were no radon or thoron concentrations that exceeded the site-specific background, nor were there any adjusted concentrations that equaled or exceeded a value two standard deviations above the mean s ite-specific background concentration for that radionuclide in that type of sample (*i.e.,* there is no evidence of an observed release to air from Site sources).

PROJECT DESCRIPTION

RST 3 will conduct a radon/thoron survey using RAD7 and provide support to EPA for gamma survey using Ludlum-2241, Fluke Pressurized Ionization Chamber (PIC) Model 451P, Reuter-Stokes RSS-131ER High Pressure Ion Chamber (HPIC) and BNC SAM 940. RST 3 will subcontract the services of a NR PP-certified company, Accu-View Property Inspections, Inc. (AVPI), to provide field support in identifying radon canister placement in up to 15 locations, placing the canisters, picking up the canisters, and delivering to a private laboratory, Radon Testing Corporation of America (RTCA), for radon analysis. RST 3 will collect soil samples from locations suspected to contain radionuclides and metals/metalloids. Rinsate blank samples

QAPP Worksheet #10: Problem Definition (Continued)

will be collected as needed to demonstrate proper decontamination procedures of the Geoprobe ® cutting shoe. The soil and rinsate samples will be submitted to an RST 3-procured laboratory, Test America for TAL metal, including mercury, isotopic thorium (thorium-228, thorium-230 and thorium-232), isotopic uranium (uranium-233/234, uranium-235/236 and uranium-238), radium-226, radium-228, and gamma spectroscopy analyses.

OBSERVATION FROM ANY SITE RECONNAISSANCE REPORT

During a reconnaissance performed by the NYSDOH and NYSDEC in July 2013, screening activities at the Site along the roadway and along the back roadway leading off site showed radiation levels up to 51 µR/hr in the roadway with the pressurized ion chamber (PIC) and up to 50,000 counts per minute (cpm) with the sodium iodide (NaI) 2x2 detector.

On December 12 and 13, 2013, Weston Solutions, Inc., Site Assessment Team (SAT) personnel collected a total of 14 subsurface soil samples and three slag samples from the Site. Soil samples were also collected from two locations suspected to be outside the influence of the area of observed contamination to document background conditions. At each sample location, soil samples were collected directly beneath slag material; at locations where a radioactive layer was not visually observed to be present, the soil sample was collected at the equivalent depth interval. The slag samples each consisted of one single piece of slag. The soil samples were analyzed by TestAmerica Laboratories for target analyte list (TAL) metals analysis; isotopic thorium, isotopic uranium, radium-226, and radium-228 by alpha spectroscopy; and radioisotopes by gamma spectroscopy. The slag samples were analyzed for the same parameters, with the exception of TAL metals analysis. One soil sample for TAL metals analysis was designated as a matrix spike/matrix spike duplicate (MS/MSD) sample for quality assurance/quality control (QA/QC) purposes. One rinsate blank was collected to demonstrate adequate decontamination of non-dedicated sampling equipment (*i.e.,* cutting shoe). Analytical results indicate concentrations of radionuclides in all slag samples and seven soil samples (including the field duplicate) to be significantly higher than at background conditions.

On May 1, 2014, SAT personnel collected radon and thoron concentration measurements from locations on and in the vicinity of the Site. At the selected locations in background areas, above the source material, and off the source area, radon and thoron concentration measurements in pCi/L were collected with RAD7 radon detectors. The radon and thoron measurements were collected at heights of one meter above the ground surface. The measurements included uncertainty values, which were taken into account to calculate adjusted concentrations for evaluation of observed release in the air migration pathway. There were no radon or thoron concentrations that exceeded the site-specific background, nor were there any adjusted concentrations that equaled or exceeded a value two standard deviations above the mean site-specific background concentration for that radionuclide in that type of sample (*i.e.,* there is no evidence of an observed release to air from Site sources).

QAPP Worksheet #10: Problem Definition (Concluded)

PROJECT DECISION STATEMENTS

EPA will use the field measurements from the radiological surveys to determine the presence or absence of radon/thoron gas and gamma radiation, the analytical results from the radon sampling event will be used to ascertain the concentration of Radon-222 in on-site buildings, and the analytical results from the soil sampling event will be used by EPA to verify the presence of residual contamination and potential releases of radiation-containing material in soil associated with the Site.

QAPP Worksheet # 11:
Project Quality Objectives/Systematic Planning Process Statement

Overall project objectives include: To determine the presence or absence of radon/thoron gas and gamma radiation using RAD7 and PIC/Ludlum-2241 respectively; to ascertain the concentration of Ra-222 in on-site buildings utilizing the services of AVPI to provide field support in placing the canisters at up to 15 locations, picking up the canisters, and delivering to RTCA for radon analysis; and to verify the presence of residual contamination and potential releases of radiation-containing material in soil associated with the Site through soil sampling for TAL metal including mercury, isotopic thorium, isotopic uranium, radium-226, radium-228, and gamma spectroscopy analyses at an RST 3-procured laboratory, Test America.

Who will use the data? Data will be used by EPA, Region II OSC.

What will the data be used for? The analytical data from this investigation will be used to assist the EPA in determining whether a Removal Action is warranted at the Site.

What types of data are needed?
Type of Data: Quantitative data for air measurements/Definitive data for soil samples

Analytical Techniques: Field survey equipment for air/Off-site laboratory analyses for air, soil and aqueous samples

Parameters: Radon/thoron gases for air measurements quantitative for air measurements, Radon (Radon-222) for air matrix ; TAL metals, including mercury, isotopic thorium (thorium-228, thorium-230 and thorium-232), isotopic uranium (uranium-233/234, uranium-235/236 and uranium-238), radium-226, radium-228, and gamma spectroscopy analysis for soil and aqueous matrices.

Type of survey/sampling equipment : RAD7 Radon Detector for air measurements, Ludlum-2241, Fluke Pressurized Ionization Chamber (PIC) Model 451P, Reuter-Stokes RSS-131ER High Pressure Ion Chamber (HPIC), and BNC SAM 940 for gamma surveys, and activated charcoal canisters for radon samples. Geoprobe®, plastic scoops, aluminum pans, and sample jars for soil.

Access Agreement: To be provided by EPA, Region II OSC.

Sampling locations : Radiological surveys will be conducted throughout the entire site using RAD7, PIC and Ludlum-2241. Radon sampling will be conducted inside on-site buildings at locations that will be determined by EPA. Soil sampling locations will be determined based on results from radiological surveys, from locations suspected to contain radionuclides and metals/metalloids and at the discretion of the EPA OSC.

QAPP Worksheet # 11:
Project Quality Objectives/Systematic Planning Process Statement (Concluded)

How much data are needed? Up to 15 radon samples, including field duplicates and field blanks, will be collected for air and up to six soil samples, including one field duplicate, and one background soil samples will be collected during the sampling event. In addition rinsate blank samples will be collected as needed.

How "good" does the data need to be in order to support the environmental decision? Sampling/analytical measurement performance criteria for Precision, Accuracy, Representativeness, Completeness, and Comparability (PARCC) parameters will be established. Refer to Worksheet #12, criteria for performance measurement for definitive data.

Where, when, and how should the data be collected/generated? For radon sampling, the sampling locations will be determined on-site by the EPA OSC. Canisters will be placed inside on-site buildings about 20 inches above the ground and will collect ambient air for approximately 72 hours. For soil sampling, locations will be determined based on results from radiological surveys, from locations suspected to contain radionuclides and metals/metalloids and at the discretion of the EPA OSC. All soil samples will be collected using methods outlined in the Standard Operating Procedures (SOPs). The sampling event is scheduled to begin on August 10, 2015.

Who will collect and generate the data? The radon samples will be collected by personnel from AVPI and will be analyzed by RTCA. The soil samples will be collected by RST 3 field personnel and analyzed by Test America laboratory. Radon analytical data will be re viewed and validated by RST 3 data validation personnel and soil and aqueous radiological data will be subcontracted for data validation.

How will the data be reported? All data will be reported by the assigned laboratory (Preliminary, Electronic, and Hard Copy format). The Site Project Manager will provide a Sampling Trip Report, Status Reports, Maps/Figures, Analytical Report, and Data Validation Report to the EPA OSC.

How will the data be archived? Electronic data deliverables will be archived in a Scribe database. Non-CLP data will be archived in EPA's document control room.

QAPP Worksheet #12A: Measurement Performance Criteria Table

Matrix	Air
Analytical Group	Radon
Concentratio Level	Low

Sampling Procedure	**Analytical Method/SOP**	**Data Quality Indicators (DQIs)**	**Measurement Performance Criteria**	**QC Sample and/or Activity Used to Assess Measurement Performance**	**QC Sample Assesses Error for Sampling (S), Analytical (A) or Both (S&A)**
ANSI/AARST MAMF 2012	EPA Method 402-R-92-014	Precision	Relative Percent Difference (RPD) of +28% warning level and 30% control limit for duplicates of 4.0 pCi/L or greater. For duplicates of less than 4.0 pCi/L, the RPD warning level is 50% and the control limit is 67%.	Laboratory Duplicates	A
		Precision	RPD – 28%	Field Duplicates	A
		Accuracy	No analyte > DL	Field Blank Verification	A
		Accuracy	± 25% of the total value.	Data Completeness	A

QAPP Worksheet #12B: Measurement Performance Criteria Table

Matrix	Soil[1]/Aqueous[2]
Analytical Group	TAL Metals + Hg
Concentration Level	Low/Medium

Sampling Procedure	Analytical Method/SOP	Data Quality Indicators (DQIs)	Measurement Performance Criteria	QC Sample and/or Activity Used to Assess Measurement Performance	QC Sample Assesses Error for Sampling (S), Analytical (A) or both (S&A)
SOP # 2012	SW846, Method 6010C and 7471B (Hg)	Precision (field)	± 35 % D	Field Duplicate	S & A
		Accuracy (field)	No analyte > CRQL	Field Blank	S & A
		Precision (laboratory)	± 20 % RPD (Aqueous) ± 30 % RPD (Soil) 75 – 125 %	Lab Duplicate; MS/MSD	S & A
		Accuracy (Laboratory)	80 – 120 % (Aqueous) SRM Limits (Soil)	LCS	A
		Accuracy (laboratory)	No analyte > CRQL	Rinsate Blank	S & A
		Precision (laboratory)	10% RPD	Serial Dilution	A

1 Reference number from QAPP Worksheet #21 & #23
2 Aqueous samples will consist of rinsate blank samples only. Aqueous field duplicate and MS/MSD samples will not be collected.

QAPP Worksheet #12C: Measurement Performance Criteria Table

Matrix	Soil[1]
Analytical Group	Isotopic Thorium
Concentration Level	Low/Medium

Sampling Procedure	Analytical Method/SOP	Data Quality Indicators (DQIs)	Measurement Performance Criteria	QC Sample and/or Activity Used to Assess Measurement Performance	QC Sample Assesses Error for Sampling (S), Analytical (A) or both (S&A)
SOP # 2012	Alpha Spectrometry, HASL-300-A-01-R	Precision	% RPD < 40; RER <1%	Sample Duplicate	A
		Accuracy	Limits: Recovery Th-228: 70-130% Th-230: 81-118% Th-232: 70-130%	LCS	A
		Accuracy	< MDC	Method Blank	A

1 Reference number from QAPP Worksheet #21 & #23

QAPP Worksheet #12D: Measurement Performance Criteria Table

Matrix	Aqueous[2]
Analytical Group	Isotopic Thorium
Concentration Level	Low/Medium

Sampling Procedure	Analytical Method/SOP	Data Quality Indicators (DQIs)	Measurement Performance Criteria	QC Sample and/or Activity Used to Assess Measurement Performance	QC Sample Assesses Error for Sampling (S), Analytical (A) or both (S&A)
SOP # 2012	Alpha Spectrometry, HASL-300-A-01-R	Precision	% RPD < 40; RER <1%	Sample Duplicate	A
		Accuracy	Limits: Recovery Th-228: 70-130% Th-230: 81-125% Th-232: 70-130%	LCS	A
		Accuracy	< MDC	Method Blank	A

2 Aqueous samples will consist of rinsate blank samples only. Aqueous field duplicate and MS/MSD samples will not be collected.

QAPP Worksheet #12E: Measurement Performance Criteria Table

Matrix	Soil[1]
Analytical Group	Isotopic Uranium
Concentration Level	Low/Medium

Sampling Procedure	Analytical Method/SOP	Data Quality Indicators (DQIs)	Measurement Performance Criteria	QC Sample and/or Activity Used to Assess Measurement Performance	QC Sample Assesses Error for Sampling (S), Analytical (A) or both (S&A)
SOP # 2012	Alpha Spectrometry, HASL-300-A-01-R	Precision	% RPD < 40; RER <1%	Sample Duplicate	A
		Accuracy	Limits: Recovery U-234: 84-120% U-238: 82-122%	LCS	A
		Accuracy	< MDC	Method Blank	A

1 Reference number from QAPP Worksheet #21 & #23

.

QAPP Worksheet #12F: Measurement Performance Criteria Table (continued)

Matrix	Aqueous[2]
Analytical Group	Isotopic Uranium
Concentration Level	Low/Medium

Sampling Procedure	Analytical Method/SOP	Data Quality Indicators (DQIs)	Measurement Performance Criteria	QC Sample and/or Activity Used to Assess Measurement Performance	QC Sample Assesses Error for Sampling (S), Analytical (A) or both (S&A)
SOP # 2012	Alpha Spectrometry, HASL-300-A-01-R	Precision	% RPD < 40; RER <1%	Sample Duplicate	A
		Accuracy	Limits: Recovery U-234: 84-120% U-238: 83-121%	LCS	A
		Accuracy	< MDC	Method Blank	A

2 Aqueous samples will consist of rinsate blank samples only. Aqueous field duplicate and MS/MSD samples will not be collected.

QAPP Worksheet #12G: Measurement Performance Criteria Table (continued)

Matrix	Aqueous[2]
Analytical Group	Ra-226, and Ra-228
Concentration Level	Low/Medium

Sampling Procedure	Analytical Method/SOP	Data Quality Indicators (DQIs)	Measurement Performance Criteria	QC Sample and/or Activity Used to Assess Measurement Performance	QC Sample Assesses Error for Sampling (S), Analytical (A) or both (S&A)
SOP # 2012	SW846 9315/9320	Precision	% RPD < 40; RER <1%	Sample Duplicate	A
		Accuracy	Limits: Recovery Ra-226: 68-137% Ra-228: 56-140%	LCS	A
		Accuracy	< MDC	Method Blank	A

2 Aqueous samples will consist of rinsate blank samples only. Aqueous field duplicate and MS/MSD samples will not be collected.

QAPP Worksheet #12H: Measurement Performance Criteria Table

Matrix	Soil[1]
Analytical Group	Radioisotopes by Gamma Spectrometry
Concentration Level	Low/Medium

Sampling Procedure	Analytical Method/SOP	Data Quality Indicators (DQIs)	Measurement Performance Criteria	QC Sample and/or Activity Used to Assess Measurement Performance	QC Sample Assesses Error for Sampling (S), Analytical (A) or both (S&A)
SOP # 2012	Soil: Gamma Spectroscopy HASL 300 GA-01-0R	Precision	% RPD < 40; RER <1%	Duplicate	A
		Accuracy	Limits: Recovery Am-241: 87-116% Cs-137: 87-120% Co-60: 87-115%	LCS	A
		Accuracy	< MDC	Method Blank	A
		Accuracy	< MDC	Method Blank	A

1 Reference number from QAPP Worksheet #21 & #23

QAPP Worksheet #12I: Measurement Performance Criteria Table

Matrix	Aqueous[2]
Analytical Group	Radioisotopes by Gamma Spectrometry
Concentration Level	Low/Medium

Sampling Procedure	Analytical Method/SOP	Data Quality Indicators (DQIs)	Measurement Performance Criteria	QC Sample and/or Activity Used to Assess Measurement Performance	QC Sample Assesses Error for Sampling (S), Analytical (A) or both (S&A)
SOP # 2012	Soil: Gamma Spectroscopy HASL 300 GA-01-0R	Precision	% RPD < 40; RER <1%	Duplicate	A
		Accuracy	Limits: Recovery Am-241: 90-111% Cs-137: 90-111% Co-60: 89-110%	LCS	A
		Accuracy	< MDC	Method Blank	A

2 Aqueous samples will consist of rinsate blank samples only. Aqueous field duplicate and MS/MSD samples will not be collected.

QAPP Worksheet #13: Secondary Data Criteria and Limitations Table

Any data needed for project implementation or decision making that are obtained from non-direct measurement sources such as computer databases, background information, technologies and methods, environmental indicator data, publications, photographs, topographical maps, literature files and historical data bases will be compared to the DQOs for the project to determine the acceptability of the data. Thus, for example, analytical data from historical surveys will be evaluate d to determine whether they satisfy the validation criteria for the project and to determine whether sufficient data was provided to allow an appropriate validat ion to be done. If not, then a decision to conduct additional sampling for the site may be necessary.

Secondary Data	Data Source (Originating Organization, Report Title, and Date)	Data Generator(s) (Originating Org., Data Types, Data Generation/ Collection Dates)	How Data May Be Used (if deemed usable during data assessment stage)	Limitations on Data Use
EPA Investigation	Site Inspection Report. DCN#: 2223-2A-BKYP	Weston Solutions, Inc. (SAT Region 2)	To determine possible areas of observed contamination.	Screening-level data

QAPP Worksheet #14: Summary of Project Tasks

Survey Task:

Radon/Thoron Survey: In order to determine the presence or absence of radon/thoron gas, a RAD7 electronic radon/thoron detector with a printer attachment will be utilized by RST 3 to collect field survey data. The RAD7 sampling train will consist of a 6-inch dryer tube filled with desiccant and attached to a 3-foot long vinyl tube connected to an inlet particulate filter that will plug into the RAD7 intake port. When the RAD7 is set to Sniff/Run, ambient air will flow through the desiccant-filled tube into the intake port of the RAD7. At the end of the RAD7 Sniff/Run time, the attached printer will provide hardcopy analytical results of radon/thoron concentration in air, recorded in pCi/L.

Two RAD7 units will be set up at each background/test location. For the first RAD7 unit, the 6-inch dryer tube filled with desiccant will be set at 1-inch above the ground (contact measurement) and for the second RAD7 unit, the 6-inch dryer tube filled with desiccant will be set at approximately 3 feet above the ground (waist level measurement). A background survey will be conducted prior to initiating a Sniff/Run test. Prior to conducting a 30-minute background survey "Run" test, the RAD7 will be purged for 10 minutes. Initial survey at each location will be in Sniff mode for a 10- minutes "Sniff" test. If survey results in Sniff mode equal or exceed a value two standard deviations above the mean site-specific background concentration (2x background), then a 30- minute Run will be conducted in the "Standard" mode. If after a 30 - minute survey, a reading greater than 4 piC/L is obtained, other options, including potential additional survey at that location will be determined by the EPA OSC. If the reading is 5.6 piC/L (+/- 1), then the test is completed for that location if the range of the concentration is in the lower value range (4.6 piC/L), otherwise, other options will be determined on-site by the EPA OSC.

Gamma Survey: RST 3 will also delineate the area of observed contamination by measuring the gamma radiation exposure rates within the source area and at background locations. In accordance with Hazard Ranking System (HRS) requirements for naturally-occurring radionuclides, areas of observed contamination are defined by site-attributable radionuclide concentrations that equal or exceed a value two standard deviations above the mean site-specific background concentration or by gamma radiation exposure rates, measured by a survey instrument.

The presence/absence of gamma radiation will be determined by RST 3 using a PIC Model 451P and Ludlum-2241 to obtain field survey data. Using the PIC, Two instantaneous measurements from the PIC will be recorded at each location surveyed; one at contact (1 inch above the ground) and one at waist height (1 meter/3 feet above the ground). Survey time for each readin g will be at least 30 seconds depending on the settling of the value. Data will be collected within grids that will be determined on-site in the areas of concern (AOCs). All the results obtained from the PIC measurements will be recorded as a range (*e.g.* 4-6 µR/hr). If very low level gamma levels are observed, a Reuter Stokes RSS-131ER HPIC will be utilized to determine the exact levels. A Ludlum-2241 with a sodium iodide gamma scintillator attached to it will be used to perform gross gamma survey. The sodium iodide gamma scintillator will be held approximately 6 inches above the ground when collecting measurements. A mobile survey which will require the user to walk the Site along pre-determined paths will be performed. The

QAPP Worksheet #14: Summary of Project Tasks (Continued)

highest and lowest readings from the Ludlum will be recorded for approximately 60 seconds in cpm.

Sampling Tasks:

Radon-222 Sampling: In order to ascertain the concentration of Radon-222 in on-site buildings, RST 3 will utilize the services of AVPI in canister (Activated Charcoal Canisters) placement at up to 15 locations in accordance with the guidelines set forth in the ANSI/AARST *Protocol for Conducting Radon and Radon Decay Product Measurements in Multifamily Buildings* (MAMF 2012) and as directed by EPA . Canisters will be raised above the ground approximately 20 inches, away from drafts or vents. The canisters will collect ambient air for a minimum of approximately 72 hours at each location. For each sampling event, weather information including, temperature, humidity, wind speed, and wind direction will be recorded. The radon canister samples will be analyzed for radon gas by RTCA via EPA Method 402-R-92-014.

Soil Sampling: In order to verify the presence of residual contamination and potential releases of radiation-containing material in on-site soils, RST 3 will collect six soil samples from five sampling locations. Five of the soil samples, including one field duplicate, will be collected from four on-site locations and one background soil sample will be collected from a location outside of historic site activities. The sampling locations will be determined in the field based on field survey data from RAD7, PIC and Ludlum-2241 measurements and at the discretion of the EPA OSC. Using a Geoprobe ®, a soil core will be obtained from 0-4 feet bgs at each proposed soil sampling location. The sample collection depth will be decided in the field and will be selected by screening every 6-inch interval of the 4-foot core with a Ludlum-2241 gamma detector . A 6-inch soil sample will be selected where the highest levels of gamma radiation are found in the 4-foot core.

Soil samples will be obtained using dedicated disposable plastic scoops and placed in plastic Ziploc® bags. The soil samples will be homogenized in the Ziploc® bag before being placed into glass sample jars. Rinsate blank samples will be collected as needed to demonstrate proper decontamination procedure of the Geoprobe® cutting shoe. The soil and aqueous samples will be analyzed by Test America for TAL metals analysis (including mercury) via SW846 Methods 6010C/7471B; isotopic thorium (thorium-228, thorium-230 and thorium-232) and isotopic uranium (uranium-233/234, uranium-235/236 and uranium-238) via alpha spectroscopy Health and Safety Laboratory (HASL)-300-A-01-R, and Radium-226, Radium-228 and radioisotopes via gamma spectroscopy HASL-300-GA-01-R.

QAPP Worksheet #14: Summary of Project Tasks (Continued)

Decontamination:

Decontamination of non-disposable sampling equipment, including Geoprobe ® cutting shoes, will be performed before and after the sampling event and between sample locations, and will consist of the following steps:

1. Soap and water scrub.
2. Tap water or deionized (DI) water rinse.
3. Steam-clean with DI water.
4. Air dry.
5. Screen with radiation meter for residual contamination.
6. Foil wrap if not immediately re-used.

The decontamination fluid will be discarded at locations that indicate the highest levels of contamination (based on radiation meter screening) such that runoff will not occur.

Analysis Tasks:

Radon will be analyzed via activated charcoal canisters (ANSI/AARST MAMF 2012), EPA Method 402-R-92-014. The soil and aqueous samples will also be analyzed by Test America for TAL metals analysis (including mercury) via SW846 Method 6010C/7471B; isotopic thorium (thorium-228, thorium-230 and thorium-232) and isotopic uranium (uranium-233/234, uranium-235/236 and uranium-238) via alpha spectroscopy Health and Safety Laboratory (HASL)-300-A-01-R, and Radium-226, Radium-228 and radioisotopes via gamma spectroscopy HASL-300-GA-01-0R.

Quality Control Tasks:

All matrices will have QC samples collected (i.e. field duplicates). All analytical methods will perform: Initial calibration, 10% laboratory duplicates; 59% field blank, monthly spike recovery, and all other applicable QC defined in the method.

Data Management Tasks:

Activities under this project will be reported in status and trip reports and other deliverables (e.g., analytical reports, final reports) described herein. Activities will also be summarized in appropriate format for inclusion in monthly and annual reports.

The following deliverables will be provided under this project:

Trip Report: A trip report will be prepared to provide a detailed accounting of what occurred during each sampling mobilization. The trip report will be prepared within two weeks of the last day of each sampling mobilization. Information will be provided on time of major events, dates, and personnel on-site (including affiliations).

QAPP Worksheet #14: Summary of Project Tasks (Continued)

Maps/Figures: Maps depicting site layout, contaminant source areas, and sample locations will be included in the trip report, as appropriate.

Analytical Report: An analytical report will be prepared for samples analyzed under thi s plan. Information regarding the analytical methods or procedures employed, sample results, QA/QC results, chain- of-custody documentation, laboratory correspondence, and raw data will be provided within this deliverable.

Data Review: A review of the data generated under this plan will be undertaken. The assessment of data acceptability or usability will be provided separately, or as part of the analytical report.

Documentation and Records:

All sample documents will be completed legibly, in ink. Any corrections or revisions will be made by lining through the incorrect entry and by initialing the error.

Field Logbook: The field logbook is essentially a descriptive notebook detailing site activities and observations so that an accurate account of field procedures can be reconstructed in the writer's absence. Field logbook will be bound and paginated. All entries will be dated and signed by the individuals making the entries, and should include (at a minimum) the following

1. Site name and project number
2. Name(s) of personnel on-site
3. Dates and times of all entries (military time preferred)
4. Descriptions of all site activities, site entry and exit times
5. Noteworthy events and discussions
6. Weather conditions
7. Site observations
8. Sample and sample location identification and description *
9. Subcontractor information and names of on-site personnel
10. Date and time of sample collections, along with chain of custody information
11. Record of photographs
12. Site sketches

* The description of the sample location will be noted in such a manner as to allow the reader to reproduce the location in the field at a later date.

Sample Labels: Sample labels will clearly identify the particular sample, and should include the following:

1. Site/project number.
2. Sample identification number.
3. Sample collection date and time.
4. Designation of sample (grab or composite).
5. Sample preservation.
6. Analytical parameters.
7. Name of sampler.

QAPP Worksheet #14: Summary of Project Tasks (Concluded)

Sample labels will be written in indelible ink and securely affixed to the sample container. Tie-on labels can be used if properly secured.

Custody Seals: Custody seals demonstrate that a sample container has not been tampered with or opened. The individual in possession of the sample(s) will sign and date the seal, affixing it in such a manner that the container cannot be opened without breaking the seal. The name of this individual, along with a description of the sample packaging, will be noted in the field logbook.

Custody Seals: Custody seals demonstrate that a sample container has not been tampered with or opened. The individual in possession of the sample(s) will sign and date the seal, affixing it in such a manner that the container cannot be opened without breaking the seal. The name of this individual, along with a description of the sample packaging, will be noted in the field logbook.

Assessment/Audit Tasks: No performance audit of field operations is anticipated at this time. If conducted, performance and system audit will be in accordance with the project plan.

Data Review Tasks: All data will be validated by RST 3 (RST 3-procured laboratory data).

Laboratory analytical results will be assessed by the data reviewer for compliance with re quired precision, accuracy, completeness, representativeness, and sensitivity.

QAPP Worksheet #15A: Reference Limits and Evaluation Table

Matrix: Air
Analytical Group: Radon
Concentration Level: Low

Analyte	Project Action Limit (pCi/L)	Project QL (pCi/L)	Laboratory Achievable DL
Radon	4.0	--	0.5 pCi/L

QAPP Worksheet #15B: Reference Limits and Evaluation Table

Analyte	CAS Number	Project Quantitation Limit	Method CRQLs (ug/L)	Achievable Laboratory (TestAmerica) Limits			
				RLs (mg/kg)	MDLs (mg/kg)	RLs (ug/L)	MDLs (ug/L)
Aluminum	7429-90-5	NS	NS	20.0	4.26	200	22.4
Antimony	7440-36-0	NS	NS	1.00	0.309	10.0	3.74
Arsenic	7440-38-2	NS	NS	1.00	0.236	10.0	1.78
Barium	7440-39-3	NS	NS	5.00	0.110	50.0	2.12
Beryllium	7440-41-7	NS	NS	0.500	0.0750	5.00	0.283
Cadmium	7440-43-9	NS	NS	0.500	0.0340	5.00	0.336
Calcium	7440-70-2	NS	NS	250	6.73	1000	54.2
Chromium	7440-47-3	NS	NS	1.00	0.138	10.0	3.35
Cobalt	7440-48-4	NS	NS	5.00	0.144	50.0	2.72
Copper	7440-50-8	NS	NS	2.50	0.245	25.0	2.10
Iron	7439-89-6	NS	NS	10.0	1.99	100	12.8
Lead	7439-92-1	NS	NS	1.00	0.129	10.0	0.598
Magnesium	7439-95-4	NS	NS	100	3.16	1000	50.5
Manganese	7439-96-5	NS	NS	1.00	0.0800	15.0	1.00
Nickel	7440-02-0	NS	NS	4.00	0.116	40.0	2.57
Potassium	7440-09-7	NS	NS	500	72.4	5000	456
Selenium	7782-49-2	NS	NS	1.50	0.206	15.0	2.08
Silver	7440-22-4	NS	NS	1.00	0.0700	10.0	0.994
Sodium	7440-23-5	NS	NS	100	7.62	1000	105
Thallium	7440-28-0	NS	NS	2.00	0.190	20.0	2.38
Vanadium	7440-62-2	NS	NS	5.00	0.507	50.0	4.39
Zinc	7440-66-6	NS	NS	5.00	0.562	20.0	8.32
Mercury	7439-97-6	NS	NS	0.0330	0.0110	0.200	0.0600

NS – Not Specified

QAPP Worksheet #15C: Reference Limits and Evaluation Table

*Analyte	CAS Number	Project Quantitation Limit	Method CRQLs (pCi/g)	Achievable Laboratory (TestAmerica) Limits Target Soil MDCs (pCi/g)	Achievable Laboratory (TestAmerica) Limits Target Aqueous MDCs (pCi/L)
Uranium-233/234	13966-29-5	NS	NS	1.00	1.00
Uranium-235/236	15117-96-1	NS	NS	1.00	1.00
Uranium-238	7440-61-1	NS	NS	1.00	1.00
Thorium-228	14274-82-9	NS	NS	1.00	1.00
Thorium-230	14269-63-7	NS	NS	1.00	1.00
Thorium-232	7440-29-1	NS	NS	1.00	1.00

NS – Not Specified

**Analyte	CAS Number	Project Quantitation Limit	Method CRQLs (pCi/L)	Achievable Laboratory (TestAmerica) Limits Target Soil MDCs (pCi/g)	Achievable Laboratory (TestAmerica) Limits Target Aqueous MDCs (pCi/L)
Radium-226	13982-63-3	NS	NS	1.00	1.00
Radium-228	15262-20-1	NS	NS	1.00	1.00
Americium-241	14596-10-2	NS	NS	-	-
Cesium-137	10045-97-3	NS	NS	0.20	20.0
Cobalt-60	10198-40-0	NS	NS	-	-

NS – Not Specified

QAPP Worksheet #16: Project Schedule/Timeline Table

Activities	Organization	Dates (MM/DD/YY)		Deliverable	Deliverable Due Date
		Anticipated Date(s) of Initiation	Anticipated Date of Completion		
Preparation of QAPP	RST 3 Contractor Site Project Manager	Prior to sampling date	8/5/2015	QAPP	8/7/2015
Review of QAPP	RST 3 Contractor QAO and/or Group Leader	Prior to sampling date	8/6/2015	Approved QAPP	8/7/2015
Preparation of Health and Safety Plan	RST 3 Contractor Site Project Manager	Prior to sampling date	8/5/2015	HASP	8/7/2015
Procurement of Field Equipment	RST 3 Contractor Site Project Manager and/or Equipment Officer	Prior to sampling date	8/7/2015	-	-
Laboratory Request	Not Applicable	Prior to sampling date	8/7/2015	CLP/Non-CLP Request Form	NA
Field Reconnaissance/Access	RST 3 Contractor Site Project Manager; or EPA Region II OSC	8/10/2015	8/10/2015	NA	NA
Collection of Field Samples	RST 3 Contractor Site Project Manager	8/10/2015	8/14/2015	NA	NA
Laboratory Electronic Data Received	RST 3 Contractor and EPA Region 2 DEWSA	8/14/2015	8/28/2015	Preliminary Data	8/28/2015
Laboratory Package Received	RST 3 Contractor and EPA Region 2 DEWSA	8/28/2015	9/4/2015	Validated Data	9/4/2015
Validation of Laboratory Results	RST 3 Contractor and EPA Region 2 DEWSA	9/4/2015	9/18/2015	Final Report	9/18/2015
Data Evaluation/ Preparation of Final Report	RST 3 Contractor Site Project Manager	9/18/2015	10/2/2015	Final Report	10/2/2015

QAPP Worksheet #17: Sampling Design and Rationale

In order to determine the presence or absence of radon/thoron gas, RAD7 electronic radon/thoron detector with a printer attachment will be utilized by RST 3 to collect field survey data. Two RAD7 units will be set up at each background/test location. For the first RAD7 unit, the 6-inch dryer tube filled with desiccant will be set at 1-inch above the ground (contact measurement) and for the second RAD7 unit, the 6-inch dryer tube filled with desiccant will be set at approximately 3 feet above the ground (waist level measurement). A background survey will be conducted prior to initiating a Sniff/Run test. Prior to conducting a 30-minute background survey "Run" test, the RAD7 will be purged for 10 minutes. Initial survey at each location will be in Sniff mode for a 10-minutes "Sniff" test. If survey results in Sniff mode equal or exceed a value two standard deviations above the mean site-specific background concentration (2x background), then a 30-minute Run will be conducted in the "Standard" mode. If after a 30 -minutes survey, a reading greater than 4 piC/L is obtained, other options, including potential additional survey at that location will be determined by the EPA OSC. If the reading is 5.6 piC/L (+/- 1), then the test is completed for that location if the range of the concentration is in the lower value range (4.6 piC/L), otherwise, other options will be determined on-site by the EPA OSC.

The presence/absence of gamma radiation will be determined by RST 3 using a PIC Model 451P and Ludlum-2241 to obtain field survey data. Using the PIC, Two instantaneous measurements from the PIC will be recorded at each location surveyed; one at contact (1 inch above the ground) and one at waist height (1 meter/3 feet above the ground). Survey time for each readin g will be at least 30 seconds depending on the settling of the value. Data will be collected within grids that will be determined on-site in the areas of concern (AOCs). All the results obtained from the PIC measurements will be recorded as a range (*e.g.* 4-6 µR/hr). If very low level gamma levels are observed, a Reuter Stokes RSS-131ER HPIC will be utilized to determine the exact levels. A Ludlum-2241 with a sodium iodide gamma scintillator attached to it will be used to perform gross gamma survey. The sodium iodide gamma scintillator will be held approximately 6 inches above the ground when collecting measurements. A mobile survey which will require the user to walk the Site along pre-determined paths will be performed. The highest and lowest readings from the Ludlum will be recorded for approximately 60 seconds in cpm.

In order to ascertain the concentration of Radon-222 in on-site buildings, RST 3 will utilize the services of AVPI in canister (Activated Charcoal Canisters) placement at up to 15 locations in accordance with the guidelines set forth in the ANSI/AARST *Protocol for Conducting Radon and Radon Decay Product Measurements in Multifamily Buildings* (MAMF 2012) and as directed by EPA. Canisters will be raised above the ground approximately 20 inches, away from drafts or vents. The canisters will collect ambient air for a minimum of approximately 72 hours at each location. For each sampling event, weather information including, temperature, humidity, wind speed, and wind direction will be recorded. The radon canister samples will be analyzed for radon gas by RTCA via EPA Method 402-R-92-014.

In order to verify the presence of residual contamination and potential releases of radiation-containing material in on-site soils, RST 3 will collect six soil samples from five sampling locations. Five of the soil samples, including one field duplicate, will be collected from four on-

QAPP Worksheet #17: Sampling Design and Rationale (Concluded)

site locations and one background soil sample will be collected from a location outside of historic site activities. The sampling locations will be determined in the field based on field survey data from RAD7, PIC and Ludlum-2241 measurements and at the discretion of the EPA OSC. Using a Geoprobe®, a soil core will be obtained from 0-4 feet bgs at each proposed soil sampling location. The sample collection depth will be decided in the field and will be selected by screening every 6-inch interval of the 4-foot core with a Ludlum-2241 gamma detector. A 6-inch soil sample will be selected where the highest levels of gamma radiation are found in the 4-foot core.

Soil samples will be obtained using dedicated disposable plastic scoops and placed in plastic Ziploc® bags. The soil samples will be homogenized in the Ziploc ® bag before being placed into glass sample jars. Rinsate blank samples will be collected as needed to demonstrate proper decontamination procedure of the Geoprobe® cutting shoe. The soil and aqueous samples will be analyzed by Test America for TAL metals analysis (including mercury) via SW846 Methods 6010C/7471B; isotopic thorium (thorium-228, thorium-230 and thorium-232) and isotopic uranium (uranium-233/234, uranium-235/236 and uranium-238) via alpha spectroscopy Health and Safety Laboratory (HASL)-300-A-01- R, and Radium-226, Radium-228 and radioisotopes via gamma spectroscopy HASL-300-G1A-01-R.

Soil sampling will be conducted as per EPA ERT Standard Operating Procedure (SOP) 2001 for General Field Sampling Guidelines. Additionally, soil samples will be collected in accordance with EPA ERT SOP 2012 for Soil Sampling.

The following laboratories will provide the analyses indicated:

Lab Name/Location	Sample Type	Parameters
Accu-View Property Inspections, Inc. PO Box 641 Buffalo, New York 14051	Air	Deploy and Retrieve Canisters for Radon Testing
Radon Testing Corporation of America 2 Hayes Street Elmsford, New York 10523	Air	Radon Testing
TestAmerica 13715 Rider Trail North St. Louis, MO 63045	Soil	TAL Metals + Hg via SW846, Method 6010C/7471B
		Isotopic Thorium and Isotopic Uranium by HASL alpha spectroscopy
		Radium-226, Radium-228 and radioisotopes by gamma spectroscopy via HASL-300 or equivalent

Refer to Worksheet #20 for QA/QC samples, sampling methods, and SOPs.

QAPP Worksheet #18: Sampling Locations and Methods/SOP Requirements Table

Matrix	Sampling Location(s)	Units	Analytical Group(s)	Concentration Level	No. of Samples (identify field duplicates)	Sampling SOP Reference	Rationale for Sampling Location
Air	15	pCi/L	Radon	Low	10% of total	SOP# 2001	Determine contaminants
Soil	5	mg/kg	TAL Metals + Hg	Low/Medium	1/20 duplicate sample per matrix	SOP# 2001 2012	Determine contaminants
Soil	5	pCi/g	Isotopic Thorium and Isotopic Uranium, by alpha spectroscopy	Low/Medium	1/20 duplicate sample per matrix	SOP# 2001 2012	Determine contaminants
Soil	5	pCi/g	Radium-226, Radium-228 and Radioisotopes by gamma spectroscopy	Low/Medium	1/20 duplicate sample per matrix	SOP# 2001 2012	Determine contaminants

The website for EPA-ERT SOPs is: http://www.ert.org/mainContent.asp?section=Products&subsection=List

QAPP Worksheet #19: Analytical SOP Requirements Table

Matrix	No. of Samples	Analytical Group	Concentration Level	Analytical / Preparation Method SOP Reference[1]	Containers (number, size, and type)	Sample volume[3] (units)	Preservation Requirements (chemical, temperature, light protected)	Maximum Holding Time[2] (preparation / analysis)
Air	15	Radon	Low	EPA Method 402-R-92-014 ANSI/AAST MAMF 2012	Activated Charcoal Canister	72 hour period of time	None	None
Soil	6	Gamma Spectroscopy	Low/Medium	HASL 300 GA-01-0R SOP ST-RD-0102	1x32oz Plastic or Zip Lock bag	350g	None	None
Soil	6	Isotopic Thorium	Low/Medium	HASL 300 A-01-R SOP ST-RC-0210	1x2oz Glass Jar	5g	None	None
Soil	6	Isotopic Uranium	Low/Medium	HASL 300 A-01-R SOP ST-RC-0210	1x2oz Glass Jar	5g	None	None
Soil	6	TAL Metals	Low/Medium	SW846 3050B/6010C ST-MT-0003	1x2oz Glass Jar	1g	Cool ≤ 6°C	180 days
Soil	6	Mercury	Low/Medium	SW846 7471B ST-MT-0007	1x2oz Glass Jar	1g	Cool ≤ 6°C	28 days

[1] Refer to the Analytical SOP References table (Worksheet #23).

[2] Maximum holding time is calculated from the time the sample is collected to the time the sample is prepared/extracted.

[3] The minimum sample size is based on analysis allowing for sufficient sample for reanalysis. Additional volume is needed for the laboratory Matrix Spike/Matrix Spike Duplicate sample analysis.

QAPP Worksheet #19: Analytical SOP Requirements Table (Concluded)

Matrix	No. of Samples	Analytical Group	Concentration Level	Analytical / Preparation Method SOP Reference[1]	Containers (number, size, and type)	Sample volume[3] (units)	Preservation Requirements (chemical, temperature, light protected)	Maximum Holding Time[2] (preparation / analysis)
Aqueous	2	Gamma Spectroscopy	Low/Medium	HASL 300 GA-01-0R SOP ST-RD-0102	1L Plastic	1 Liter	HNO3, Cool to 4^0 C	None
Aqueous	2	Isotopic Thorium	Low/Medium	HASL 300 A-01-R SOP ST-RC-0210	1L Plastic	500 mL	HNO3, Cool to 4^0 C	None
Aqueous	2	Isotopic Uranium	Low/Medium	HASL 300 A-01-R SOP ST-RC-0210	1L Plastic	500 mL	HNO3, Cool to 4^0 C	None
Aqueous	2	Radium-226	Low/Medium	SW846 9315 SOP ST-RC-0403	1L Plastic	500 mL	HNO3, Cool to 4^0 C	None
Aqueous	2	Radium-228	Low/Medium	SW846 9320 SOP ST-RC-0403	1L Plastic	500 mL	HNO3, Cool to 4^0 C	None
Aqueous	2	TAL Metals	Low/Medium	SW846 3050B/6010C ST-MT-0003	500 mL Plastic	50 mL	HNO3, Cool to 4^0 C	180 days
Aqueous	2	Mercury	Low/Medium	SW846 7471B ST-MT-0005	500 mL Plastic	30 mL	HNO3, Cool to 4^0 C	28 days

[1] Refer to the Analytical SOP References table (Worksheet #23).

[2] Maximum holding time is calculated from the time the sample is collected to the time the sample is prepared/extracted.

[3] The minimum sample size is based on analysis allowing for sufficient sample for reanalysis. Additional volume is needed for the laboratory Matrix Spike/Matrix Spike Duplicate sample analysis.

QAPP Worksheet #20: Field Quality Control Sample Summary Table

Matrix	Analytical Group	Concentration Level	Analytical and Preparation SOP Reference	No. of Sampling Locations	No. of Field Duplicate Pairs	No. of Extra Volume Laboratory QC (e.g., MS/MSD) Samples[1]	No. of Field Blanks[1]	No. of Trip. Blanks	No. of PE Samples
Air	Radon	Low	EPA Method 402-R-92-014 ANSI/AAST MAMF 2012	15	10% of total	NR	NR	5%	NR
Soil	TAL Metals + Hg	Low/Medium	SW846 6010C/ 7471B ST-MT-0003, ST-MT-0007	5	1 per 20 samples	1 per 20 samples	NR	NR	NR
	Isotopic Thorium and Isotopic Uranium, by alpha spectroscopy	Low/Medium	HASL 300 A-01-R SOP ST-RC-0210	5	1 per 20 samples	1 per 20 samples	NR	NR	NR
	Radium-226, Radium-228 and Radioisotopes by gamma spectroscopy	Low/Medium	HASL 300 GA-01-0R SOP ST-RD-0102	5	1 per 20 samples	1 per 20 samples	NR	NR	NR

MS/MSD not required for radon (air) samples.
NR – Not Required
[1] Only required if non-dedicated sampling equipment to be used.

QAPP Worksheet #21: Project Sampling SOP References Table

Reference Number	Title, Revision Date and/or Number	Originating Organization	Equipment Type	Modified for Project Work? (Y/N)	Comments
SOP#2001	General Field Sampling Guidelines (all media); Rev. 0.0 August 1994	EPA/OSWER/ERT	Site Specific	N	--
ANSI/AARST MAMF 2012	*Protocol for Conducting Radon and Radon Decay Product Measurements In Multifamily Buildings,* 2012	U.S. EPA	Charcoal Canisters	N	--
SOP #2012	Soil Sampling; Rev. 0.0 February 2000	EPA/OSWER/ERT	plastic scoops, aluminum trays, and appropriate sample jars	N	--
SOP#2050	Geoprobe; Rev.0.1 March 2002	EPA/OSWER/ERT	Downhole tooling	N	--

See attachment B for SOP # 2001 and EPA 402-R-92-014
www.ert.org/mainContent.asp?section=Products&subsection=List

QAPP Worksheet #22: Field Equipment Calibration, Maintenance, Testing, and Inspection Table

*Field Equipment
TRIMBLE® GEOXT™ HANDHELD, Ludlum-2241, Fluke Pressurized Ionization Chamber (PIC) Model 451P, Reuter-Stokes RSS-131ER High Pressure Ion Chamber (HPIC) and BNC SAM 940

* All on-site field equipment will be provided and operated by the EPA.

QAPP Worksheet #23: Analytical SOP References Table

Reference Number	Title, Revision Date, and/or Number	Definitive or Screening Data	Analytical Group	Instrument	Organization Performing Analysis	Modified for Project Work? (Y/N)
ANSI/AARST MAMF 2012	Radon Analysis, via activated charcoal canisters	Definitive Data	Radon	Gamma Spectroscopy	RTCA – Elmsford, NY	N
ST-MT-0003	Analysis of Metals by Inductively Coupled-Atomic Emission Spectroscopy Rev. 17, 06/22/15	Definitive	Soil and Aqueous - TAL Metals	ICP	TestAmerica – St. Louis, MO	N
ST-MT-0007	Preparation and Analysis of Mercury in Soil by CVAA, Rev. 14, 08/25/14	Definitive	Soil - Mercury	Cold Vapor AA	TestAmerica – St. Louis, MO	N
ST-MT-0005	Preparation and Analysis of Mercury in Aqueous Samples by CVAA, Rev. 15, 08/25/14	Definitive	Water/ Mercury	Cold Vapor AA	TestAmerica – St. Louis	N
ST-RD-0102	GammaVision Analysis, Rev. 13, 06/22/2015	Definitive	Soil and Aqueous - Gamma Spec	Gamma Spectroscopy	TestAmerica – St. Louis, MO	N
ST-RD-0210	Alpha Spectroscopy Analysis, Rev. 12, 04/24/02015	Definitive	Soil and Aqueous - Isotopic Uranium & Isotopic Thorium	Alpha Spectroscopy	TestAmerica – St. Louis, MO	N
ST-RD-0403	Low Background Gas Flow Proportional Counting (GFPC) System Analysis, Rev. 16, 05/05/2015	Definitive	Aqueous / Radium-226 & Radium-228	Gas Flow Proportional Counter	TestAmerica – St. Louis	N

QAPP Worksheet #24: Analytical Instrument Calibration Table

Instrument	Calibration Procedure	Frequency of Calibration	Acceptance Criteria	Corrective Action	Person Responsible for CA	SOP Reference[1]
ICP-AES	Linear Dynamic Range (LDR) or high-level check standard	At initial set up and checked every 6 months high a high standard at the upper limit of the range	Within + 10% of true value	Dilute samples within the calibration range, or re-establish/verify the LDR	TestAmerica – St. Louis Analyst	ST-MT-0003
ICP-AES	Initial Calibration (ICAL) – minimum one high standard and a calibration blank	Daily initial calibration prior to sample analysis	If more than one calibration standard is used, r2 ≥ 0.99	Recalibrate	TestAmerica – St. Louis Analyst	ST-MT-0003
ICP-AES	Second Source Calibration Verification (ICV)	Once after each initial calibration, prior to sample analysis	Value of second source for all analyte(s) within ± 10% of expected	Correct problem. Rerun ICV. Repeat ICAL as necessary.	TestAmerica – St. Louis Analyst	ST-MT-0003
ICP-AES	Continuing Calibration Verification (CCV)	After every 10 samples and at the end of the analysis sequence	All analytes within ± 10% of expected value	Recalibrate – rerun 10 samples previous to failed CCV.	TestAmerica – St. Louis Analyst	ST-MT-0003
ICP-AES	Low-level Calibration Check Standard (Low-level ICV)	Daily	All analytes within + 20% of expected value	Correct problem and repeat ICAL	TestAmerica – St. Louis Analyst	ST-MT-0003
ICP-AES	Interference Check Solutions (ICS)	After ICAL and prior to sample analysis	ICS-A: Absolute value of concentration for all non-spiked project analytes < LOD(unless they are a verified trace impurity from one of the spike analytes) ICS-AB: within + 20% of true value	Terminate analysis; locate and correct problem; reanalyze ICS, reanalyze all samples	TestAmerica – St. Louis Analyst	ST-MT-0003

QAPP Worksheet #24: Analytical Instrument Calibration Table (Continued)

Instrument	Calibration Procedure	Frequency of Calibration	Acceptance Criteria	Corrective Action	Person Responsible for CA	SOP Reference[1]
Cold Vapor AA	Initial Calibration (ICAL)	Daily initial calibration prior to sample analysis	Correlation coefficient R>=0.995 for linear regression	Recalibrate	TestAmerica – St. Louis Analyst	ST-MT-0007
Cold Vapor AA	Second Source Calibration Verification (ICV)	Once after each initial calibration, prior to sample analysis	Value of second source for all analyte(s) within ± 10% of expected value (second source)	Recalibrate	TestAmerica – St. Louis Analyst	ST-MT-0007
Cold Vapor AA	Continuing Calibration Verification (CCV)	After every 10 samples and at the end of the analysis sequence.	All analytes within + 20% of expected value	Recalibrate – rerun 10 samples previous to failed CCV.	TestAmerica – St. Louis Analyst	ST-MT-0007
Gamma Spectrometer	1. Energy calibration 2. FWHM calibration 3. Background	1. Annual 2. Annual 3. Monthly	For Energy and FWHM calibration: • Within 0.5% or 0.1 KeV for all calibration points • Within 8% for all calibration points • Verify with second source that always contains at least Am-241, Co-60, and Cs-137 • Must be ± 10%D for each nuclide For Background, acceptance criterion is 12 hours	• Recalibrate • Instrument maintenance • Consult with Technical Director	TestAmerica – St. Louis Group Leader	ST-RD-0102
Alpha Spectrometer	1. Energy calibration 2. Efficiency calibration and background check 3. Subtraction spectrum 4. Pulser check and background check	1. Monthly 2. Monthly 3. Monthly 4. Daily	1. Three isotopes in 3–6 MeV range all within ± 40 KeV of expected value 2. >20% 3. Ultra Low Level: < 2 CPM Low Level: < 2–4 CPM Routine Level: < 4–10 CPM High Level: < 10–20 CPM 4. Pulser energy, peak centroid, peak resolution, peak area, calibration and background must pass statistical "boundary" out-of-range test	• Recalibrate • Instrument maintenance • Consult with Technical Director • If background check is > 20 CPM, then detector requires maintenance	TestAmerica – St. Louis Group Leader	ST-RC-0210

QAPP Worksheet #24: Analytical Instrument Calibration Table (Concluded)

Instrument	Calibration Procedure	Frequency of Calibration	Acceptance Criteria	Corrective Action	Person Responsible for CA	SOP Reference[1]
Gas Flow Proportional Counter	• Plateau generation and/or verification • Discriminator setting • Initial long background count • Mass attenuated efficiency calibration • Eight source dual/single calibration curves	Annual	• Plot efficiencies vs masses • Calculate equation of curve – degree ≤3 • Remove outliers >15% deviation from theoretical values but not more than 20% of total points • Calculate coefficient of determination (R^2). R^2 must be ≥0.9 • Verify calibration with second source standard count – must be within 30 percent of true value and mean across all detectors <10%	• Recalibrate • Instrument maintenance • Consult with Technical Director	TestAmerica – St. Louis Group Leader	ST-RD-0403

[1] Specify the appropriate letter or number form the Analytical SOP References table (Worksheet #23)
CA – corrective action
DESA – Division of Environmental Science and Assessment
EPA – U.S. Environmental Protection Agency
ICP-AES – inductively coupled plasma atomic emission spectroscopy
SOP – standard operating procedure

QAPP Worksheet #25: Analytical Instrument and Equipment Maintenance, Testing, and Inspection Table

Instrument/ Equipment	Maintenance Activity	Testing Activity	Inspection Activity	Frequency	Acceptance Criteria	Corrective Action	Responsible Person	SOP Reference
ICP-AES	ICS	Instrument Performance	Conformance to interference check	Prior to sample analysis	Within + 20% of expected value	Terminate analysis, reanalyze ICS to rule out standard degradation or inaccurate injection. If problem persists, perform instrument maintenance, repeat calibrations and reanalyze all associated samples.	TestAmerica – St. Louis Analyst	ST-MT-0003
ICP-AES	ICB/CCB	Instrument Performance	Instrument contamination check	After every calibration verification	ICB:No analytes detected > RL; CCB: no analyte detected > 3X MDL	Determine possible source of contamination and apply appropriate measure to correct the problem. Reanalyze calibration blank and all associated samples.	TestAmerica – St. Louis Analyst	ST-MT-0003
Cold Vapor AA	ICB/CCB	Instrument Performance	Instrument contamination check	After every calibration verification	No analytes detected > RL	Determine possible source of contamination and apply appropriate measure to correct the problem. Reanalyze calibration blank and all associated samples.	TestAmerica – St. Louis Analyst	ST-MT-0007
Gamma Spectrometer	1. Clean cave; fill dewar with N_2 2. QA check	1. Physical check 2. Background and source check	1. Physical check 2. Check deviation	1. Weekly 2. Daily	1. Acceptable background 2. Within 3 sigma of measured population	• Recalibrate • Instrument maintenance • Consult with Technical Director	TestAmerica – St. Louis Group Leader / Analyst	ST-RD-0102

QAPP Worksheet #25: Analytical Instrument and Equipment Maintenance, Testing, and Inspection Table (Concluded)

Instrument/ Equipment	Maintenance Activity	Testing Activity	Inspection Activity	Frequency	Acceptance Criteria	Corrective Action	Responsible Person	SOP Reference
Alpha Spectrometer	Clean planchette holders	Physical check	Physical check	Monthly	Acceptable background and calibration efficiencies	• Recalibrate • Instrument maintenance • Consult with Technical Director	TestAmerica – St. Louis Group Leader / Analyst	ST-RC-0210
Gas Flow Proportional Counter	1. Clean instrument 2. Inspect windows 3. QA check	1. Physical check 2. Physical check 3. Background and source count	1. Physical check 2. Physical check 3. Check deviation	1. Daily 2. High counts and/or background 3. Daily	1. None applicable 2. No physical defects 3. Within 3 sigma of 20 day population	• Recalibrate • Instrument maintenance • Consult with Technical Director	TestAmerica – St. Louis Group Leader / Analyst	ST-RD-0403

[1] Specify the appropriate letter or number form the Analytical SOP References table (Worksheet #23)

QAPP Worksheet #26: Sample Handling System

SAMPLE COLLECTION, PACKAGING, AND SHIPMENT
Sample Collection (Personnel/Organization): RST 3 Site Project Manager, Weston Solutions, Inc., Region II
Sample Packaging (Personnel/Organization): RST 3 Site Project Manager and sampling team members, Weston Solutions, Inc., Region II
Coordination of Shipment (Personnel/Organization): RST 3 Site Project Manager, sampling team members, Weston Solutions, Inc., Region II
Type of Shipment/Carrier: FedEx
SAMPLE RECEIPT AND ANALYSIS
Sample Receipt (Personnel/Organization): Sample Custodian, RST 3-Procured Non-RAS Laboratory
Sample Custody and Storage (Personnel/Organization): Sample Custodian, RST 3-Procured Non-RAS Laboratory
Sample Preparation (Personnel/Organization): Sample Custodian, RST 3-Procured Non-RAS Laboratory
Sample Determinative Analysis (Personnel/Organization): Sample Custodian, RST 3-Procured Non-RAS Laboratory
SAMPLE ARCHIVING
Field Sample Storage (No. of days from sample collection): Samples to be shipped same day of collection, and arrive at laboratory within 24 hours (1 day) of sample shipment
Sample Extract/Digestate Storage (No. of days from extraction/digestion): As per analytical methodology; see Worksheet #19
SAMPLE DISPOSAL
Personnel/Organization: Sample Custodian, RST 3-Procured Non-RAS Laboratory
Number of Days from Analysis: Until analysis and QA/QC checks are completed; as per analytical methodology; see Worksheet #19.

QAPP Worksheet #27: Sample Custody Requirements

Sample Identification Procedures Each sample collected by Region II RST 3 will be identified by a property number (H001), a sample location number (001), the matrix identifier of the sample collected (AA for radon air sample and SS for soil sample), specifically for soil samples, the depth interval from where the sample was collected will be identified as a range (0612), and the sample number (01). The last number will represent the sample number collected from each location. Duplicate samples will be identified in the same manner but will be the next sequential sample number (in most cases 02).

e.g. H001-AA002-01; whereas, H001 = Property Number 001, AA001 = Radon Sample Location 002, 01 = Sample Number 01.
e.g. H001-SS002-0612-01: whereas, H001 = Property Number 001, SS001 = Soil Sample Location 002, 0612 = Soil sample collected at 6 to 12 feet, 01 = Sample Number 01

Location of the sample collected will be recorded in the project database and site logbook. A duplicate sample will be identified in the same manner as other samples and will be distinguished and documented in the field logbook. Each sample will also be labeled with a non-CLP assigned number. Depending on the type of sample, additional information such as sampling round, date, etc. will be added.

Field Sample Custody Procedures (sample collection, packaging, shipment, and delivery to laboratory): Each sample will be individually identified and labeled after collection, then sealed with custody seals and enclosed in a plastic cooler. The sample information will be recorded on chain-of custody (COC) forms, and the samples shipped to the appropriate laboratory via overnight delivery service or courier. Chain-of-custody records must be prepared in Scribe to accompany samples from the time of collection and throughout the shipping process. Each individual in possession of the samples must sign and date the sample COC Record. The chain-of-custody record will be considered completed upon receipt at the laboratory. A traffic report and chain-of-custody record will be maintained from the time the sample is taken to its final deposition. Every transfer of custody must be noted and signed for, and a copy of this record kept by each individual who has signed. When samples are not under direct control of the individual responsible for them, they must be stored in a locked container sealed with a custody seal. Specific information regarding custody of the samples projected to be collected on the weekend will be noted in the field logbook. The chain-of-custody record should include (at minimum) the following: 1) Sample identification number; 2) Sample information; 3) Sample location; 4) Sample date; 5) Sample Time; 6) Sample Type Matrix; 7) Sample Container Type; 8) Sample Analysis Requested; 9) Name(s) and signature(s) of sampler(s); and 10) Signature (s) of any individual(s) with custody of samples.

A separate chain-of-custody form must accompany each cooler for each daily shipment. The chain-of-custody form must address all samples in that cooler, but not address samples in any other cooler. This practice maintains the chain-of-custody for all samples in case of mis-shipment.

QAPP Worksheet #27: Sample Custody Requirements (Concluded)

Laboratory Sample Custody Procedures (receipt of samples, archiving, and disposal): A sample custodian at the laboratory will accept custody of the shipped samples, and check them for discrepancies, proper preservation, integrity , etc. If noted, issues will be forwarded to the laboratory manager for corrective action. The sample custodian will relinquish custody to the appropriate department for analysis. At this time, no samples will be archived at the laboratory. Disposal of the samples will occur only after analyses and QA/QC checks are completed.

QAPP Worksheet #28A: QC Samples Table
Radon

Matrix	Air
Analytical Group	Radon
Concentration Level	Low
Sampling SOP(s)	See QAPP Worksheet #18
Analytical Method/SOP Reference	ANSI/AARST MAMF 2012 / EPA Method 402-92-R-014
SAMPLER'S NAME	Richard F. Pezzino
Field Sampling Organization	Accu-View Property Inspections, Inc.
Analytical Organization	Radon Testing Corporation of America
No. of Sample Locations	15

QC Sample:	Frequency/Number	Method/SOP QC Acceptance Limits	Corrective Action	Person(s) Responsible for Corrective Actio	Data Quality Indicat (DQI)	Measurement Performance Criteria
Lab Duplicate	10% of the sample	EPA Method 402-R-92-014	Identify problem and correct	Laboratory technician	Precision	Relative Percent Difference (RPD) of +28% warning level and 30% control limit for duplicates of 4.0 pCi/L or greater. For duplicates of less than 4.0 pCi/L, the RPD warning level is 50% and the control limit is 67%.
Monthly Spike	6 per month	Laboratory SOP	Identify problem and correct	Laboratory technician	Precision	±25%

Laboratory should follow method required QC Criteria.

QAPP Worksheet #28B: QC Samples Table
TAL Metals

Matrix	Soil/Aqueous[1]
Analytical Group	TAL Metals
Concentration Level	Low/Medium
Sampling SOP	2012
Analytical Method/ SOP Reference	SW846 6010C
SAMPLER'S NAME	Joel Petty
Field Sampling Organization	Weston Solutions, Inc. , RST 3
Analytical Organization	TestAmerica
No. of Sample Locations	5

QC Sample:	Frequency/Number	Method/SOP QC Acceptance Limits	Corrective Action	Person(s) Responsible for Corrective Action	Data Quality Indicator (DQI)	Measurement Performance Criteria
Method blank	One per preparation batch	No target analytes detected greater than one-half RL and 1/10 the amount measured in any sample or 1/10 regulatory limit (whichever is greater). No laboratory common contaminants detected greater than RL.	Correct problem, then re-reanalyze method blank and all samples processed with the contaminated blank	Lab Manager/ Analyst	Representativeness	Acceptable results per stated QC Acceptance Limits
MS/MSD	One MS/MSD pair per preparation batch per matrix	Recovery Limits: 75-125%	Identify problem; if not related to matrix interference, re-reanalyze MS/MSD and all associated batch samples	Lab Manager/ Analyst	Precision/Accuracy	Within in-house limits

[1] Aqueous samples will consist of rinsate blank samples only. Aqueous field duplicate and MS/MSD samples will not be collected.

QAPP Worksheet #28B (Continued): QC Samples Table
TAL Metals

Matrix	Soil/Aqueous[1]
Analytical Group	TAL Metals
Concentration Level	Low/Medium
Sampling SOP	2012
Analytical Method/ SOP Reference	SW846 6010C
SAMPLER'S NAME	Joel Petty
Field Sampling Organization	Weston Solutions, Inc. , RST 3
Analytical Organization	TestAmerica
No. of Sample Locations	5

QC Sample:	Frequency/Number	Method/SOP QC Acceptance Limits	Corrective Action	Person(s) Responsible for Corrective Action	Data Quality Indicator (DQI)	Measurement Performance Criteria
LCS/LCSD	One LCS or LCS/LCSD pair per preparation batch per matrix	Recovery Limits: within standard reference material limits	Correct problem, then re-prep and re-reanalyze the LCS and all associated batch samples for failed analytes, if sufficient sample volume is available and samples are within 2x the hold time. Qualify data accordingly if reprep & re-analysis cannot be performed or if reprep & reanalysis also has failed analytes	Lab Manager/ Analyst	Accuracy	within standard reference material limits
Initial and Continuing Calibration Blank	Before beginning a sample run, after every 10 samples, and at end of the analysis sequence	No analytes detected > 2 × MDL	Any sample associated with a blank that fails the criteria checks will be reprocessed in a subsequent preparation batch, except when the sample analysis resulted in a non-detect. If no sample volume remains for reprocessing, the results will be reported with appropriate data qualifying codes.	TestAmerica - St. Louis Analyst	Accuracy	No analytes detected > 2 × MDL

[1]Aqueous samples will consist of rinsate blank samples only. Aqueous field duplicate and MS/MSD samples will not be collected.

QAPP Worksheet #28B (Concluded): QC Samples Table
TAL Metals

Matrix	Soil/Aqueous[1]
Analytical Group	TAL Metals
Concentration Level	Low/Medium
Sampling SOP	2012
Analytical Method/ SOP Reference	SW846 6010C
SAMPLER'S NAME	Joel Petty
Field Sampling Organization	Weston Solutions, Inc. , RST 3
Analytical Organization	TestAmerica
No. of Sample Locations	5

QC Sample:	Frequency/Number	Method/SOP QC Acceptance Limits	Corrective Action	Person(s) Responsible for Corrective Action	Data Quality Indicator (DQI)	Measurement Performance Criteria
Serial dilution	Each new sample matrix	1:5 dilution must agree within ±10% of original determination.	Perform post-digestion spike if serial diltion does not meet criteria	TestAmerica - St. Louis Analyst	Accuracy	1:5 dilution must agree within ±10% of original determination.
Post-digestion spike	When serial dilution or matrix spike fails	Recovery within 80-120%	Re-analyze post-digestion spike.	TestAmerica - St. Louis Analyst	Accuracy	Recovery within 80-120%

[1] Aqueous samples will consist of rinsate blank samples only. Aqueous field duplicate and MS/MSD samples will not be collected.

QAPP Worksheet #28C: QC Samples Table
Mercury

Matrix	Soil/Aqueous[1]
Analytical Group	Mercury
Concentration Level	Low/Medium
Sampling SOP	2012
Analytical Method/ SOP Reference	SW846/7471B
SAMPLER'S NAME	Joel Petty
Field Sampling Organization	Weston Solutions, Inc. , RST 3
Analytical Organization	TestAmerica
No. of Sample Locations	5

QC Sample:	Frequency/Number	Method/SOP QC Acceptance Limits	Corrective Action	Person(s) Responsible for Corrective Action	Data Quality Indicator (DQI)	Measurement Performance Criteria
Method blank	One per preparation batch	No target analytes detected greater than one-half RL and 1/10 the amount measured in any sample or 1/10 regulatory limit (whichever is greater). No laboratory common contaminants detected greater than RL.	Correct problem, then re-reanalyze method blank and all samples processed with the contaminated blank	Lab Manager/ Analyst	Representativeness	Acceptable results per stated QC Acceptance Limits
MS/MSD	One MS/MSD pair per preparation batch per matrix	Recovery Limits: 51-148%	Identify problem; if not related to matrix interference, re-reanalyze MS/MSD and all associated batch samples	Lab Manager/ Analyst	Precision/Accuracy	Within in-house limits

[1] Aqueous samples will consist of rinsate blank samples only. Aqueous field duplicate and MS/MSD samples will not be collected.

QAPP Worksheet #28C (Concluded): QC Samples Table
Mercury

Matrix	Soil/Aqueous[1]
Analytical Group	Mercury
Concentration Level	Low/Medium
Sampling SOP	2012
Analytical Method/ SOP Reference	SW846/7471B
SAMPLER'S NAME	Joel Petty
Field Sampling Organization	Weston Solutions, Inc. , RST 3
Analytical Organization	TestAmerica
No. of Sample Locations	5

QC Sample:	Frequency/Number	Method/SOP QC Acceptance Limits	Corrective Action	Person(s) Responsible for Corrective Action	Data Quality Indicator (DQI)	Measurement Performance Criteria
LCS/LCSD	One LCS or LCS/LCSD pair per preparation batch per matrix	Recovery Limits: 80-120%	Correct problem, then re-prep and re-reanalyze the LCS and all associated batch samples for failed analytes, if sufficient sample volume is available and samples are within 2x the hold time. Qualify data accordingly if reprep & re-analysis cannot be performed or if reprep & reanalysis also has failed analytes	Lab Manager/ Analyst	Accuracy	Within in-house limits
Calibration Blank	Before beginning a sample run, after every 10 samples, and at end of the analysis sequence	No analytes detected > 2 × MDL	Any sample associated with a blank that fails the criteria checks will be reprocessed in a subsequent preparation batch, except when the sample analysis resulted in a non-detect. If no sample volume remains for reprocessing, the results will be reported with appropriate data qualifying codes.	TestAmerica - St. Louis Analyst	Accuracy	No analytes detected > 2 × MDL

[1] Aqueous samples will consist of rinsate blank samples only. Aqueous field duplicate and MS/MSD samples will not be collected.

QAPP Worksheet #28D: QC Samples Table
Gamma Spectroscopy

Matrix	Soil/Aqueous[1]
Analytical Group	Gamma Spec.
Concentration Level	Low/Medium
Sampling SOP	2012
Analytical Method/ SOP Reference	HASL-300 GA-01-0R
SAMPLER'S NAME	Joel Petty
Field Sampling Organization	Weston Solutions, Inc. , RST 3
Analytical Organization	TestAmerica
No. of Sample Locations	5

QC Sample:	Frequency/Number	Method/SOP QC Acceptance Limits	Corrective Action	Person(s) Responsible for Corrective Action	Data Quality Indicator (DQI)	Measurement Performance Criteria
Method Blank	1 per preparatory batch	Analytes < RL	Correct problem, then re-reanalyze method blank and all samples processed with the contaminated blank	TestAmerica – St. Louis Analyst	Accuracy	Analytes < RL
LCS	1 per preparatory batch	Recovery Limits: Cs-137: 87-120% Co-60: 87-115% Am-241: 87-116%	Identify problem; if not related to matrix interference, re-reanalyze LCS and all associated batch samples	TestAmerica – St. Louis Analyst	Accuracy	Within in-house limits
Sample Duplicate	1 per preparatory batch	RPD ≤40% AND/OR RER ≤1	Correct problem, then re-reanalyze all samples processed with the duplicate	TestAmerica – St. Louis Analyst	Accuracy	Within in-house limits

[1] Aqueous samples will consist of rinsate blank samples only. Aqueous field duplicate and MS/MSD samples will not be collected.

QAPP Worksheet #28E: QC Samples Table
Isotopic Uranium

Matrix	Soil/Aqueous[1]
Analytical Group	Isotopic Uranium
Concentration Level	Low/Medium
Sampling SOP	2012
Analytical Method/ SOP Reference	HASL-300 A-01-R
SAMPLER'S NAME	Joel Petty
Field Sampling Organization	Weston Solutions, Inc. , RST 3
Analytical Organization	TestAmerica
No. of Sample Locations	5

QC Sample:	Frequency/Number	Method/SOP QC Acceptance Limits	Corrective Action	Person(s) Responsible for Corrective Action	Data Quality Indicator (DQI)	Measurement Performance Criteria
Method Blank	1 per preparatory batch	Analytes < RL	Correct problem, then re-reanalyze method blank and all samples processed with the contaminated blank	TestAmerica – St. Louis Analyst	Accuracy	Analytes < RL
LCS	1 per preparatory batch	Percent Recovery: U-234: 84–120% U-238: 82-122%	Identify problem; if not related to matrix interference, re-reanalyze LCS and all associated batch samples	TestAmerica – St. Louis Analyst	Accuracy	Within in-house limits

[1] Aqueous samples will consist of rinsate blank samples only. Aqueous field duplicate and MS/MSD samples will not be collected.

QAPP Worksheet #28E (Concluded): QC Samples Table
Isotopic Uranium

Matrix	Soil/Aqueous[1]
Analytical Group	Isotopic Uranium
Concentration Level	Low/Medium
Sampling SOP	2012
Analytical Method/ SOP Reference	HASL-300 A-01-R
SAMPLER'S NAME	Joel Petty
Field Sampling Organization	Weston Solutions, Inc. , RST 3
Analytical Organization	TestAmerica
No. of Sample Locations	5

QC Sample:	Frequency/Number	Method/SOP QC Acceptance Limits	Corrective Action	Person(s) Responsible for Corrective Action	Data Quality Indicator (DQI)	Measurement Performance Criteria
Tracer	Per sample, blank, LCS, MS, MSD	U-232 tracer: ≥30% and ≤110%	Truncate carriers/tracers above 100% recovery to eliminate low biased results. Reprep and reanalyze sample if carrier is low (indicating high biased results) if there is activity in the sample above the reporting limit. No reanalysis if matrix interference is nonconformance during sample preparation.	TestAmerica – St. Louis Analyst	Accuracy	Within in-house limits
Sample Duplicate	1 per preparatory batch	RPD ≤40% AND/OR RER ≤1	Correct problem, then re-reanalyze all samples processed with the duplicate	TestAmerica – St. Louis Analyst	Accuracy	Within in-house limits

[1] Aqueous samples will consist of rinsate blank samples only. Aqueous field duplicate and MS/MSD samples will not be collected.

QAPP Worksheet #28F: QC Samples Table
Isotopic Thorium

Matrix	Soil/Aqueous[1]
Analytical Group	Isotopic Thorium
Concentration Level	Low/Medium
Sampling SOP	2012
Analytical Method/ SOP Reference	HASL-300 A-01-R
SAMPLER'S NAME	Joel Petty
Field Sampling Organization	Weston Solutions, Inc. , RST 3
Analytical Organization	TestAmerica
No. of Sample Locations	5

QC Sample:	Frequency/Number	Method/SOP QC Acceptance Limits	Corrective Action	Person(s) Responsible for Corrective Action	Data Quality Indicator (DQI)	Measurement Performance Criteria
Method Blank	1 per preparatory batch	Analytes < RL	Correct problem, then re-reanalyze method blank and all samples processed with the contaminated blank	TestAmerica – St. Louis Analyst	Accuracy	Analytes < RL
LCS	1 per preparatory batch	Percent Recovery: Th-230: 81–118%	Identify problem; if not related to matrix interference, re-reanalyze LCS and all associated batch samples	TestAmerica – St. Louis Analyst	Accuracy	Within in-house limits

[1] Aqueous samples will consist of rinsate blank samples only. Aqueous field duplicate and MS/MSD samples will not be collected.

QAPP Worksheet #28F (Concluded): QC Samples Table
Isotopic Thorium

Matrix	Soil/Aqueous[1]
Analytical Group	Isotopic Thorium
Concentration Level	Low/Medium
Sampling SOP	2012
Analytical Method/ SOP Reference	HASL-300 A-01-R
SAMPLER'S NAME	Joel Petty
Field Sampling Organization	Weston Solutions, Inc. , RST 3
Analytical Organization	TestAmerica
No. of Sample Locations	5

QC Sample:	Frequency/Number	Method/SOP QC Acceptance Limits	Corrective Action	Person(s) Responsible for Corrective Action	Data Quality Indicator (DQI)	Measurement Performance Criteria
Tracer	Per sample, blank, LCS, MS, MSD	Th-229 tracer: ≥30% and ≤110%	Truncate carriers/tracers above 100% recovery to eliminate low biased results. Reprep and reanalyze sample if carrier is low (indicating high biased results) if there is activity in the sample above the reporting limit. No reanalysis if matrix interference is nonconformance during sample preparation.	TestAmerica – St. Louis Analyst	Accuracy	Within in-house limits
Sample Duplicate	1 per preparatory batch	RPD ≤40% AND/OR RER ≤1	Correct problem, then re-reanalyze all samples processed with the duplicate	TestAmerica – St. Louis Analyst	Accuracy	Within in-house limits

[1] Aqueous samples will consist of rinsate blank samples only. Aqueous field duplicate and MS/MSD samples will not be collected.

QQAPP Worksheet #29: Project Documents and Records Table

Sample Collection Documents and Records	Analysis Documents and Records	Data Assessment Documents and Records	Data Assessment Documents and Records	Other
Field Notes Digital Photographs Chain- of-Custody (COC) Records Air Bills Copies of Pertinent e-mails. Field Instrument Records	Record of Field Instrument. Measurements and Radiological Readings. Radiological Dosimetry Records. Corrective Action Reports. Radiological Instrument Calibration Readings.	Copies of all Analytical Data Deliverables; hard copies of raw data are archived; The raw data files from the laboratory include Analytical Instrument Calibration Records, COC Records, and Sample Preparation and Analysis Files , Sample Receipt Records	Copies of all Analytical Data Deliverables; hard copies of raw data are archived; The raw data files from the laboratory include Analytical Instrument Calibration Records, COC Records, and Sample Preparation and Analysis Files , Sample Receipt Records	Staff Health and Safety Records ; CLP Request Form and RST 3 Analytical Request Form

QAPP Worksheet #30: Analytical Services Table

Matrix	Analytical Group	Concentration Level	Analytical SOP	Data Package Turnaround Time	Laboratory/Organization (Name and Address, Contact Person and Telephone Number)	Backup Laboratory/Organization (Name and Address, Contact Person and Telephone Number)
Air	Radon	Low	EPA Method 402-R-92-014	28 Days	Accu-View Property Inspections, Inc. PO Box 641 Buffalo, NY 14051 716-882-2200 Radon Testing Corporation of America 2 Hayes Street Elmsford, New York 10523 914-345-3380	NA
Soil/Aqueous	TAL Metals	Low/Medium	See Worksheet #23	28 Days	TestAmerica 13715 Rider Trail North St. Louis, MO 63045 Mike Franks 314-298-8566	NA
Soil/Aqueous	Mercury	Low/Medium	See Worksheet #23	28 Days	TestAmerica 13715 Rider Trail North St. Louis, MO 63045 Mike Franks 314-298-8566	NA
Soil/Aqueous	Radiochemistry	Low/Medium	See Worksheet #23	28 Days	TestAmerica 13715 Rider Trail North St. Louis, MO 63045 Mike Franks 314-298-8566	NA

NA – Not Applicable

QAPP Worksheet #31: Planned Project Assessments Table

Assessment Type	Frequency	Internal or External	Organization Performing Assessment	Person(s) Responsible for Performing Assessment (Title and Organizational Affiliation)	Person(s) Responsible for Responding to Assessment Findings (Title and Organizational Affiliation)	Person(s) Responsible for Identifying and Implementing Corrective Actions (Title and Organizational Affiliation)	Person(s) Responsible for Monitoring Effectiveness of Corrective Actions (Title and Organizational Affiliation)
Laboratory Technical Systems/ Performance Audits	Every year	External	Regulatory Agency	Regulatory Agency	RST 3-Procured Laboratory	RST 3-Procured Laboratory	EPA, State, NRC, or other Regulatory Agency
Performance Evaluation Samples	Every year	External	Regulatory Agency	Regulatory Agency	RST 3-Procured Laboratory	RST 3-Procured Laboratory	EPA, State, NRC, or other Regulatory Agency
Proficiency Testing	Semiannually	External	NELAC	PT provider	Lab Personnel	Lab Personnel	Lab QA Officer
NELAC	Every two years	External	NELAC	NELAC Representative	Lab QA Officer	Lab Personnel	NELAC Representative
Internal Audit	Annually	Internally	TestAmerica Laboratories, Inc.	Lab QA Officer	Lab Personnel	Lab Personnel	Lab QA Officer

NRC: Nuclear Regulator Commission

QAPP Worksheet #32: Assessment Findings and Corrective Action Responses

Assessment Type	Nature of Deficiencies Documentation	Individual(s) Notified of Findings (Name, Title, Organization)	Timeframe of Notification	Nature of Corrective Action Response Documentation	Individual(s) Receiving Corrective Action Response (Name, Title, Org.)	Timeframe for Response
Project Readiness Review	Checklist or logbook entry	RST 3 Site Project Manager, Weston Solutions, Inc.	Immediately to within 24 hours of review	Checklist or logbook entry	RST 3 Site Project Leader	Immediately to within 24 hours of review
Field Observations/ Deviations from Work Plan	Logbook	RST 3 Site Project Manager, Weston Solutions, Inc. and EPA OSC	Immediately to within 24 hours of deviation	Logbook	RST 3 Site Project Manager and EPA OSC	Immediately to within 24 hours of deviation
Laboratory Technical Systems/ Performance Audits	Written Report	RST 3-Procured Laboratory	30 days	Letter	RST 3-Procured Laboratory	14 days
On-Site Field Inspection	Written Report	QAO/HSO Weston Solutions, Inc.	7 calendar days after completion of the audit	Letter/Internal Memorandum	WESTON'S REGIONAL QAO and/or EPA OSC	To be identified in the cover letter of the report

QAPP Worksheet #33: QA Management Reports Table

Type of Report	Frequency (Daily, weekly, monthly, quarterly, annually, etc.)	Projected Delivery Date(s)	Person(s) Responsible for Report Preparation (Title and Organizational Affiliation)	Report Recipient(s) (Title and Organizational Affiliation)
RST 3-Procured Laboratory Data (preliminary)	As performed	Two weeks from the sampling date	RST 3-Procured Laboratory	RST 3 Data Validator and RST 3 Site Project Manager
RST 3-Procured Laboratory Data (validated)	As performed	Up to 14 days after receipt of preliminary data	RST 3 Data Validators	RST 3 Site Project Manager and OSC, EPA Region II
On-Site Field Inspection	As performed	7 calendar days after completion of the inspection	RST 3 Site Safety Officer	RST 3 Site Project Manager
Field Change Request	As required per field change	Three days after identification of need for field change	RST 3 Site Project Manager	EPA, Region II OSC
Final Report	As performed	2 weeks after receipt of EPA approval of data package	RST 3 Site Project Manager	EPA, Region II OSC

QAPP Worksheet #34: Verification (Step I) Process Table

Verification Input	Description	Internal/ External	Responsible for Verification (Name, Organization)
Site/field logbooks	Field notes will be prepared daily by the RST 3 Site Project Manager and will be complete, appropriate, legible and pertinent. Upon completion of field work, logbooks will be placed in the project files.	I	RST 3 Site Project Manager
Chains of custody	COC forms will be reviewed against the samples packed in the specific cooler prior to shipment. The reviewer will initial the form. An original COC will be sent with the samples to the laboratory, while copies are retained for (1) the Sampling Trip Report and (2) the project files.	I	RST 3 Site Project Manager
Sampling Trip Reports	STRs will be prepared for each week of field sampling [for which samples are sent to an EPA CLP RAS laboratory]. Information in the STR will be reviewed against the COC forms, and potential discrepancies will be discussed with field personnel to verify locations, dates, etc.	I	RST 3 Site Project Manager
Laboratory analytical data package	Data packages will be reviewed/verified internally by the laboratory performing the work for completeness and technical accuracy prior to submittal.	E	RST 3-Procured Laboratories
Laboratory analytical data package	Data packages will be reviewed as to content and sample information upon receipt by EPA.	I	RST 3 Site Project Manager
Final Sample Report	The project data results will be compiled in a sample report for the project. Entries will be reviewed/verified against hardcopy information.	I	RST 3 Site Project Manager

QAPP Worksheet #35: Validation (Steps IIa and IIb) Process Table

Step IIa/IIb	Validation Input	Description	Responsible for Validation (Name, Organization)
IIa	SOPs	Ensure that the sampling methods/procedures outlined in QAPP were followed, and that any deviations were noted/approved.	RST 3 Site Project Manager
IIb	SOPs	Determine potential impacts from noted/approved deviations, in regard to PQOs.	RST 3 Site Project Manager
IIa	Chains of custody	Examine COC forms against QAPP and laboratory contract requirements (e.g., analytical methods, sample identification, etc.).	RST 3- procured laboratory - RST 3 data validator
IIa	Laboratory data package	Examine packages against QAPP and laboratory contract requirements, and against COC forms (e.g., holding times, sample handling, analytical methods, sample identification, data qualifiers, QC samples, etc.).	RST 3- procured laboratory - RST 3 data validator
IIb	Laboratory data package	Determine potential impacts from noted/approved deviations, in regard to PQOs. Examples include PQLs and QC sample limits (precision/accuracy).	RST 3- procured laboratory - RST 3 data validator
IIb	Field duplicates	Compare results of field duplicate (or replicate) analyses with RPD criteria	RST 3- procured laboratory - RST 3 data validator

QAPP Worksheet #36
Validation (Steps IIa and IIb) Summary Table

Step IIa/IIb	Matrix	Analytical Group	Validation Criteria	Data Validator (title and organizational affiliation)
IIa / IIb	Air	Radon	Sampling Method, Lab SOP, Calculations, QC Criteria	RST 3 Data Validation Personnel
IIa / IIb	Soil	TAL Metals & Mercury	Data Validation SOP for Analysis of Low/Medium Concentration for Total Metals & Mercury SW846 Methods 6040C/7471B & EPA SOP HW-2a/2b	RST 3 Data Validation Personnel
IIa / IIb	Soil	Radiological Parameters	Refer to methods listed in worksheet # 19 & 20	RST 3 subcontractor Data Validation Personnel

QAPP Worksheet #37: Usability Assessment

Summarize the usability assessment process and all procedures, including interim steps and any statistics, equations, and computer algorithms that will be used: Data, whether generated in the field or by the laboratory, are tabulated and reviewed for Precision, Accuracy, Representativeness, Completeness, and Comparability (PARCCS) by the SPM for field data or the data validator for laboratory data. The review of the PARCC Data Quality Indicators (DQI) will compare with the DQO detailed in the site-specific QAPP, the analytical methods used and impact of any qualitative and quantitative trends will be examined to determine if bias exists. A hard copy of field data is maintained in a designated field or site logbook. Laboratory data packages are validated, and final data reports are generated. All documents and logbooks are assigned unique and specific control numbers to allow tracking and management.
Questions about Non-CLP data, as observed during the data review process, are resolved by contacting the respective site personnel and laboratories as appropriate for resolution. All communications are documented in the data validation record with comments as to the resolution to the observed deficiencies.

Where applicable, the following documents will be followed to evaluate data for fitness in decision making: EPA QA/G-4, *Guidance on Systematic Planning using the Data Quality Objectives Process,* EPA/240/B-06/001, February 2006, and EPA QA/G-9R, *Guidance for Data Quality Assessment*, A reviewer's Guide EPA/240/B-06/002, February 2006.

Describe the evaluative procedures used to assess overall measurement error associated with the project:
As delineated in the ***Uniform Federal Policy for Implementing Environmental Quality Systems: Evaluating, Assessing and Documenting Environmental Data Collection and Use Programs Part 1: UFP-QAPP (EPA-505-B-04-900A, March 2005); Part 2A: UFP-QAPP Workbook (EPA-505-B-04-900C, March 2005); Part 2B: Quality Assurance/Quality Control Compendium: Non-Time Critical QA/QC Activities (EPA-505-B-04-900B, March 2005);*** "Graded Approach" will be implemented for data collection activities that are either exploratory or small in nature or where specific decisions cannot be identified, since this guidance indicates that the formal DQO process is not necessary.

The data will be evaluated to determine whether they satisfy the PQO for the project. The validation process determines if the data satisfy the QA criteria. After the data pass the data validation process, comparison results with the PQO is done.

QAPP Worksheet #37: Usability Assessment (Concluded)

EPA will use the field measurements from the radiological surveys to determine the presence or absence o f radon/thoron gas and gamma radiation, the analytical results from the radon sampling event will be used to ascertain the concentration of Ra don-222 in on-site buildings, and the analytical results from the soil sampling event will be used by EPA to verify the pre sence of residual contamination and potential releases of radiation-containing material in soil associated with the Site.

Analytical data will be compared with EPA Generic Soil Screening Levels for ingestion. EPA will use the analy tical data from this investigation to determine if soil and slag at the Site contains elevated concentrations of TAL metals and radionuclides

Identify the personnel responsible for performing the usability assessment: Site Project Manager, Data Validation Personnel, and EPA, Region II OSC

Describe the documentation that will be generated during usability assessment and how usability assessment results will be presented so that they identify trends, relationships (correlations), and anomalies:

A copy of the most current approved QAPP, including any graphs, maps and text reports developed will be provided to all personnel identified on the distribution list.

ATTACHMENT A

Site Location Map

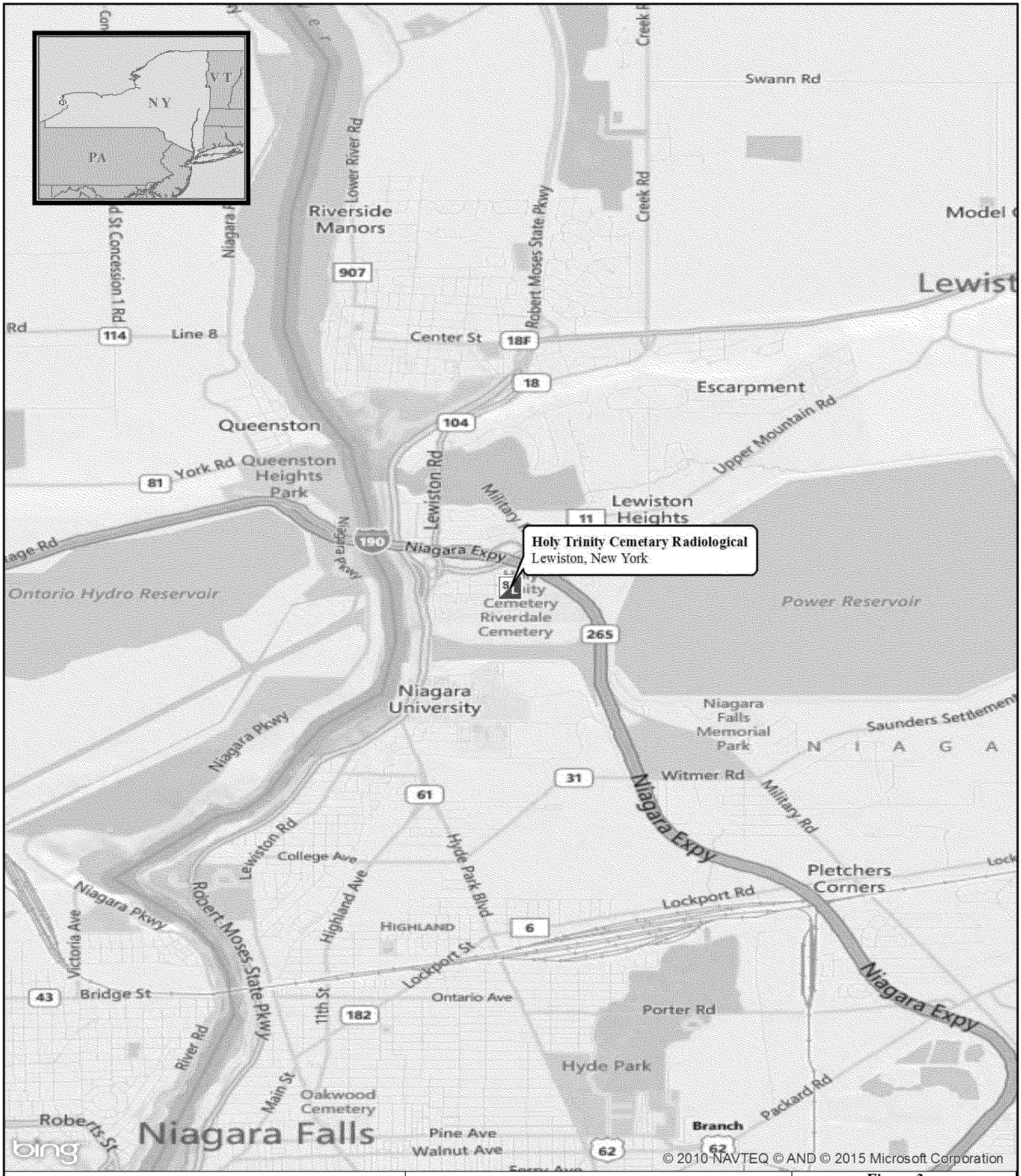

Legend

Site Location

0 0.3 0.6 1.2 1.8 2.4 Miles

Weston Solutions, Inc.
East Division

In Association With
Scientific and Environmental Associates, Inc.,
Environmental Compliance Consultants, Inc.,
Avatar Environmental, LLC, On-Site Environmental,
Inc.and Sovereign Consulting, Inc

Figure 3:
Site Location Map

Holy Trinity Cemetery Radiological
Lewiston, New York

U.S. ENVIRONMENTAL PROTECTION AGENCY
REMOVAL SUPPORT TEAM 3
CONTRACT # EP-S2-14-01

DATE MODIFIED: 7/30/2015

GIS ANALYST:	T. Benton
EPA OSC:	E. Daly
RST SPM:	B. Nwosu
FILENAME:	140730_HT_SITELOCATIONMAP.MXD

C:\TEMP\00060064\MXD\140730_HT_SITELOCATIONMAP.MXD

ATTACHMENT B

Sampling SOPs

EPA/ERT SOP # 2001, 2012, 2050 - General Field Sampling Guidelines

GENERAL FIELD SAMPLING GUIDELINES

SOP#: 2001
DATE: 08/11/94
REV. #: 0.0

1.0 SCOPE AND APPLICATION

The purpose of this Standard Operating Procedure (SOP) is to provide general field sampling guidelines that will assist REAC personnel in choosing sampling strategies, location, and frequency for proper assessment of site characteristics. This SOP is applicable to all field activities that involve sampling.

These are standard (i.e., typically applicable) operating procedures which may be varied or changed as required, dependent on site conditions, equipment limitations or limitations imposed by the procedure. In all instances, the ultimate procedures employed should be documented and associated with the final report.

Mention of trade names or commercial products does not constitute U.S. EPA endorsement or recommendation for use.

2.0 METHOD SUMMARY

Sampling is the selection of a representative portion of a larger population, universe, or body. Through examination of a sample, the characteristics of the larger body from which the sample was drawn can be inferred. In this manner, sampling can be a valuable tool for determining the presence, type, and extent of contamination by hazardous substances in the environment.

The primary objective of all sampling activities is to characterize a hazardous waste site accurately so that its impact on human health and the environment can be properly evaluated. It is only through sampling and analysis that site hazards can be measured and the job of cleanup and restoration can be accomplished effectively with minimal risk. The sampling itself must be conducted so that every sample collected retains its original physical form and chemical composition. In this way, sample integrity is insured, quality assurance standards are maintained, and the sample can accurately represent the larger body of material under investigation.

The extent to which valid inferences can be drawn from a sample depends on the degree to which the sampling effort conforms to the project's objectives. For example, as few as one sample may produce adequate, technically valid data to address the project's objectives. Meeting the project's objectives requires thorough planning of sampling activities, and implementation of the most appropriate sampling and analytical procedures. These issues will be discussed in this procedure.

3.0 SAMPLE PRESERVATION, CONTAINERS, HANDLING, AND STORAGE

The amount of sample to be collected, and the proper sample container type (i.e., glass, plastic), chemical preservation, and storage requirements are dependent on the matrix being sampled and the parameter(s) of interest. Sample preservation, containers, handling, and storage for air and waste samples are discussed in the specific SOPs for air and waste sampling techniques.

4.0 INTERFERENCES AND POTENTIAL PROBLEMS

The nature of the object or materials being sampled may be a potential problem to the sampler. If a material is homogeneous, it will generally have a uniform composition throughout. In this case, any sample increment can be considered representative of the material. On the other hand, heterogeneous samples present problems to the sampler because of changes in the material over distance, both laterally and vertically.

Samples of hazardous materials may pose a safety threat to both field and laboratory personnel. Proper health and safety precautions should be implemented when handling this type of sample.

Environmental conditions, weather conditions, or non-target chemicals may cause problems and/or interferences when performing sampling activities or when sampling for a specific parameter. Refer to the specific SOPs for sampling techniques.

5.0 EQUIPMENT/APPARATUS

The equipment/apparatus required to collect samples must be determined on a site specific basis. Due to the wide variety of sampling equipment available, refer to the specific SOPs for sampling techniques which include lists of the equipment/apparatus required for sampling.

6.0 REAGENTS

Reagents may be utilized for preservation of samples and for decontamination of sampling equipment. The preservatives required are specified by the analysis to be performed. Decontamination solutions are specified in ERT SOP #2006, Sampling Equipment Decontamination.

7.0 PROCEDURE

7.1 Types of Samples

In relation to the media to be sampled, two basic types of samples can be considered: the environmental sample and the hazardous sample.

Environmental samples are those collected from streams, ponds, lakes, wells, and are off-site samples that are not expected to be contaminated with hazardous materials. They usually do not require the special handling procedures typically used for concentrated wastes. However, in certain instances, environmental samples can contain elevated concentrations of pollutants and in such cases would have to be handled as hazardous samples.

Hazardous or concentrated samples are those collected from drums, tanks, lagoons, pits, waste piles, fresh spills, or areas previously identified as contaminated, and require special handling procedures because of their potential toxicity or hazard. These samples can be further subdivided based on their degree of hazard; however, care should be taken when handling and shipping any wastes believed to be concentrated regardless of the degree.

The importance of making the distinction between environmental and hazardous samples is two-fold:

(1) Personnel safety requirements: Any sample thought to contain enough hazardous materials to pose a safety threat should be designated as hazardous and handled in a manner which ensures the safety of both field and laboratory personnel.

(2) Transportation requirements: Hazardous samples must be packaged, labeled, and shipped according to the International Air Transport Association (IATA) Dangerous Goods Regulations or Department of Transportation (DOT) regulations and U.S. EPA guidelines.

7.2 Sample Collection Techniques

In general, two basic types of sample collection techniques are recognized, both of which can be used for either environmental or hazardous samples.

<u>Grab Samples</u>

A grab sample is defined as a discrete aliquot representative of a specific location at a given point in time. The sample is collected all at once at one particular point in the sample medium. The representativeness of such samples is defined by the nature of the materials being sampled. In general, as sources vary over time and distance, the representativeness of grab samples will decrease.

<u>Composite Samples</u>

Composites are nondiscrete samples composed of more than one specific aliquot collected at various sampling locations and/or different points in time. Analysis of this type of sample produces an average value and can in certain instances be used as an alternative to analyzing a number of individual grab samples and calculating an average value. It should be noted, however, that compositing can mask problems by diluting isolated concentrations of some hazardous compounds below detection limits.

Compositing is often used for environmental samples and may be used for hazardous samples under certain conditions. For example, compositing of hazardous waste is often performed after compatibility tests have

been completed to determine an average value over a number of different locations (group of drums). This procedure generates data that can be useful by providing an average concentration within a number of units, can serve to keep analytical costs down, and can provide information useful to transporters and waste disposal operations.

For sampling situations involving hazardous wastes, grab sampling techniques are generally preferred because grab sampling minimizes the amount of time sampling personnel must be in contact with the wastes, reduces risks associated with compositing unknowns, and eliminates chemical changes that might occur due to compositing.

7.3 Types of Sampling Strategies

The number of samples that should be collected and analyzed depends on the objective of the investigation. There are three basic sampling strategies: random, systematic, and judgmental sampling.

Random sampling involves collection of samples in a nonsystematic fashion from the entire site or a specific portion of a site. Systematic sampling involves collection of samples based on a grid or a pattern which has been previously established. When judgmental sampling is performed, samples are collected only from the portion(s) of the site most likely to be contaminated. Often, a combination of these strategies is the best approach depending on the type of the suspected/known contamination, the uniformity and size of the site, the level/type of information desired, etc.

7.4 QA Work Plans (QAWP)

A QAWP is required when it becomes evident that a field investigation is necessary. It should be initiated in conjunction with, or immediately following, notification of the field investigation. This plan should be clear and concise and should detail the following basic components, with regard to sampling activities:

- Objective and purpose of the investigation.
- Basis upon which data will be evaluated.
- Information known about the site including location, type and size of the facility, and length of operations/abandonment.
- Type and volume of contaminated material, contaminants of concern (including concentration), and basis of the information/data.
- Technical approach including media/matrix to be sampled, sampling equipment to be used, sample equipment decontamination (if necessary), sampling design and rationale, and SOPs or description of the procedure to be implemented.
- Project management and reporting, schedule, project organization and responsibilities, manpower and cost projections, and required deliverables.
- QA objectives and protocols including tables summarizing field sampling and QA/QC analysis and objectives.

Note that this list of QAWP components is not all-inclusive and that additional elements may be added or altered depending on the specific requirements of the field investigation. It should also be recognized that although a detailed QAWP is quite important, it may be impractical in some instances. Emergency responses and accidental spills are prime examples of such instances where time might prohibit the development of site-specific QAWPs prior to field activities. In such cases, investigators would have to rely on general guidelines and personal judgment, and the sampling or response plans might simply be a strategy based on preliminary information and finalized on site. In any event, a plan of action should be developed, no matter how concise or informal, to aid investigators in maintaining a logical and consistent order to the implementation of their task.

7.5 Legal Implications

The data derived from sampling activities are often introduced as critical evidence during litigation of a hazardous waste site cleanup. Legal issues in which sampling data are important may include cleanup cost recovery, identification of pollution sources and responsible parties, and technical validation of remedial design methodologies. Because of the potential for involvement in legal actions, strict adherence to technical and administrative SOPs is essential during both the development and implementation of sampling activities.

Technically valid sampling begins with thorough planning and continues through the sample collection and analytical procedures. Administrative requirements involve thorough, accurate

documentation of all sampling activities. Documentation requirements include maintenance of a chain of custody, as well as accurate records of field activities and analytical instructions. Failure to observe these procedures fully and consistently may result in data that are questionable, invalid and non-defensible in court, and the consequent loss of enforcement proceedings.

8.0 CALCULATIONS

Refer to the specific SOPs for any calculations which are associated with sampling techniques.

9.0 QUALITY ASSURANCE/ QUALITY CONTROL

Refer to the specific SOPs for the type and frequency of QA/QC samples to be analyzed, the acceptance criteria for the QA/QC samples, and any other QA/QC activities which are associated with sampling techniques.

10.0 DATA VALIDATION

Refer to the specific SOPs for data validation activities that are associated with sampling techniques.

11.0 HEALTH AND SAFETY

When working with potentially hazardous materials, follow U.S. EPA, OSHA, and corporate health and safety procedures.

U. S. EPA ENVIRONMENTAL RESPONSE TEAM

STANDARD OPERATING PROCEDURES

SOIL SAMPLING

CONTENTS

1.0 SCOPE AND APPLICATION

2.0 METHOD SUMMARY

3.0 SAMPLE PRESERVATION, CONTAINERS, HANDLING, AND STORAGE

4.0 POTENTIAL PROBLEMS

5.0 EQUIPMENT

6.0 REAGENTS

7.0 PROCEDURES

- 7.1 Preparation
- 7.2 Sample Collection
  - 7.2.1 Surface Soil Samples
  - 7.2.2 Sampling at Depth with Augers and Thin Wall Tube Samplers
  - 7.2.3 Sampling at Depth with a Trier
  - 7.2.4 Sampling at Depth with a Split Spoon (Barrel) Sampler
  - 7.2.5 Test Pit/Trench Excavation

8.0 CALCULATIONS

9.0 QUALITY ASSURANCE/QUALITY CONTROL

10.0 DATA VALIDATION

11.0 HEALTH AND SAFETY

12.0 REFERENCES

13.0 APPENDIX
- Figures

SUPERCEDES: SOP #2012; Revision 0.0; 11/16/94; U.S. EPA Contract 68-C4-0022.

1.0 SCOPE AND APPLICATION

The purpose of this standard operating procedure (SOP) is to describe the procedures for the collection of representative soil samples. Sampling depths are assumed to be those that can be reached without the use of a drill rig, direct-push, or other mechanized equipment (except for a back-hoe). Analysis of soil samples may determine whether concentrations of specific pollutants exceed established action levels, or if the concentrations of pollutants present a risk to public health, welfare, or the environment.

These are standard (i.e., typically applicable) operating procedures which may be varied or changed as required, dependent upon site conditions, equipment limitations or limitations imposed by the procedure. In all instances, the actual procedures used should be documented and described in an appropriate site report.

Mention of trade names or commercial products does not constitute U.S. Environmental Protection Agency (EPA) endorsement or recommendation for use.

2.0 METHOD SUMMARY

Soil samples may be collected using a variety of methods and equipment depending on the depth of the desired sample, the type of sample required (disturbed vs. undisturbed), and the soil type. Near-surface soils may be easily sampled using a spade, trowel, and scoop. Sampling at greater depths may be performed using a hand auger, continuous flight auger, a trier, a split-spoon, or, if required, a backhoe.

3.0 SAMPLE PRESERVATION, CONTAINERS, HANDLING, AND STORAGE

Chemical preservation of solids is not generally recommended. Samples should, however, be cooled and protected from sunlight to minimize any potential reaction. The amount of sample to be collected and proper sample container type are discussed in ERT/REAC SOP #2003 Rev. 0.0 08/11/94, *Sample Storage, Preservation and Handling.*

4.0 INTERFERENCES AND POTENTIAL PROBLEMS

There are two primary potential problems associated with soil sampling - cross contamination of samples and improper sample collection. Cross contamination problems can be eliminated or minimized through the use of dedicated sampling equipment. If this is not possible or practical, then decontamination of sampling equipment is necessary. Improper sample collection can involve using contaminated equipment, disturbance of the matrix resulting in compaction of the sample, or inadequate homogenization of the samples where required, resulting in variable, non-representative results.

5.0 EQUIPMENT

Soil sampling equipment includes the following:

- Maps/plot plan
- Safety equipment, as specified in the site-specific Health and Safety Plan
- Survey equipment or global positioning system (GPS) to locate sampling points
- Tape measure
- Survey stakes or flags
- Camera and film
- Stainless steel, plastic, or other appropriate homogenization bucket, bowl or pan
- Appropriate size sample containers
- Ziplock plastic bags
- Logbook
- Labels
- Chain of Custody records and custody seals
- Field data sheets and sample labels
- Cooler(s)
- Ice
- Vermiculite
- Decontamination supplies/equipment
- Canvas or plastic sheet
- Spade or shovel
- Spatula
- Scoop
- Plastic or stainless steel spoons
- Trowel(s)
- Continuous flight (screw) auger
- Bucket auger
- Post hole auger
- Extension rods
- T-handle
- Sampling trier
- Thin wall tube sampler
- Split spoons
- Vehimeyer soil sampler outfit
  - Tubes
  - Points
  - Drive head
  - Drop hammer
  - Puller jack and grip
- Backhoe

6.0 REAGENTS

Reagents are not used for the preservation of soil samples. Decontamination solutions are specified in ERT/REAC SOP #2006 Rev. 0.0 08/11/94, *Sampling Equipment Decontamination*, and the site specific work plan.

7.0 PROCEDURES

7.1 Preparation

1. Determine the extent of the sampling effort, the sampling methods to be employed, and the types and amounts of equipment and supplies required.

2. Obtain necessary sampling and monitoring equipment.

3. Decontaminate or pre-clean equipment, and ensure that it is in working order.

4. Prepare schedules and coordinate with staff, client, and regulatory agencies, if appropriate.

5. Perform a general site survey prior to site entry in accordance with the site specific Health and Safety Plan.

6. Use stakes, flagging, or buoys to identify and mark all sampling locations. Specific site factors, including extent and nature of contaminant, should be considered when selecting sample location. If required, the proposed locations may be adjusted based on site access, property boundaries, and surface obstructions. All staked locations should be utility-cleared by the property owner or the On-Scene-Coordinator (OSC) prior to soil sampling; and utility clearance should always be confirmed before beginning work.

7.2 Sample Collection

7.2.1 Surface Soil Samples

Collection of samples from near-surface soil can be accomplished with tools such as spades, shovels, trowels, and scoops. Surface material is removed to the required depth and a stainless steel or plastic scoop is then used to collect the sample.

This method can be used in most soil types but is limited to sampling at or near the ground surface. Accurate, representative samples can be collected with this procedure depending on the care and precision demonstrated by the sample team member. A flat, pointed mason trowel to cut a block of the desired soil is helpful when undisturbed profiles are required. Tools plated with chrome or other materials should not be used. Plating is particularly common with garden implements such as potting trowels.

The following procedure is used to collect surface soil samples:

1. Carefully remove the top layer of soil or debris to the desired sample depth with a pre-cleaned spade.

2. Using a pre-cleaned, stainless steel scoop, plastic spoon, or trowel, remove and discard a thin layer of soil from the area which came in contact with the spade.

3. If volatile organic analysis is to be performed, transfer the sample directly into an appropriate, labeled sample container with a stainless steel lab spoon, or equivalent and secure the cap tightly. Place the remainder of the sample into a stainless steel, plastic, or other appropriate homogenization container, and mix thoroughly to obtain a homogenous sample representative of the entire sampling interval. Then, either place the sample into appropriate, labeled containers and secure the caps tightly; or, if composite samples are to be collected, place a sample from another sampling interval or location into the homogenization container and mix thoroughly. When compositing is complete, place the sample into appropriate, labeled containers and secure the caps tightly.

7.2.2 Sampling at Depth with Augers and Thin Wall Tube Samplers

This system consists of an auger, or a thin-wall tube sampler, a series of extensions, and a "T" handle (Figure 1, Appendix A). The auger is used to bore a hole to a desired sampling depth, and is then withdrawn. The sample may be collected directly from the auger. If a core sample is to be collected, the auger tip is then replaced with a thin wall tube sampler. The system is then lowered down the borehole, and driven into the soil to the completion depth. The system is withdrawn and the core is collected from the thin wall tube sampler.

Several types of augers are available; these include: bucket type, continuous flight (screw), and post-hole augers. Bucket type augers are better for direct sample recovery because they provide a large volume of sample in a short time. When continuous flight augers are used, the sample can be collected directly from the flights. The continuous flight augers are satisfactory when a composite of the complete soil column is desired. Post-hole augers have limited utility for sample collection as they are designed to cut through fibrous, rooted, swampy soil and cannot be used below a depth of approximately three feet.

The following procedure is used for collecting soil samples with the auger:

1. Attach the auger bit to a drill rod extension, and attach the "T" handle to the drill rod.

2. Clear the area to be sampled of any surface debris (e.g., twigs, rocks, litter). It may be advisable to remove the first three to six inches of surface soil for an area approximately six inches in radius around the drilling location.

3. Begin augering, periodically removing and depositing accumulated soils onto a plastic sheet spread near the hole. This prevents accidental brushing of loose material back down the borehole when removing the auger or adding drill rods. It also facilitates refilling the hole, and avoids possible contamination of the surrounding area.

4. After reaching the desired depth, slowly and carefully remove the auger from the hole. When sampling directly from the auger, collect the sample after the auger is removed from the hole and proceed to Step 10.

5. Remove auger tip from the extension rods and replace with a pre-cleaned thin wall tube sampler. Install the proper cutting tip.

6. Carefully lower the tube sampler down the borehole. Gradually force the tube sampler into the soil. Do not scrape the borehole sides. Avoid hammering the rods as the vibrations may cause the boring walls to collapse.

7. Remove the tube sampler, and unscrew the drill rods.

8. Remove the cutting tip and the core from the device.

9. Discard the top of the core (approximately 1 inch), as this possibly represents material collected before penetration of the layer of concern. Place the remaining core into the appropriate labeled sample container. Sample homogenization is not required.

10. If volatile organic analysis is to be performed, transfer the sample into an appropriate, labeled sample container with a stainless steel lab spoon, or equivalent and secure the cap tightly. Place the remainder of the sample into a stainless steel, plastic, or other appropriate homogenization container, and mix thoroughly to obtain a homogenous sample representative of the entire sampling interval. Then, either place the sample into appropriate, labeled containers and secure the caps tightly; or, if composite samples are to be collected, place a sample from another sampling interval into the homogenization container and mix thoroughly.

    When compositing is complete, place the sample into appropriate, labeled containers and secure the caps tightly.

11. If another sample is to be collected in the same hole, but at a greater depth, reattach the auger bit to the drill and assembly, and follow steps 3 through 11, making sure to decontaminate the auger and tube sampler between samples.

12. Abandon the hole according to applicable state regulations. Generally, shallow holes can simply be backfilled with the removed soil material.

7.2.3 Sampling with a Trier

The system consists of a trier, and a "T" handle. The auger is driven into the soil to be sampled and used to extract a core sample from the appropriate depth.

The following procedure is used to collect soil samples with a sampling trier:

1. Insert the trier (Figure 2, Appendix A) into the material to be sampled at a 0° to 45° angle from horizontal. This orientation minimizes the spillage of sample.

2. Rotate the trier once or twice to cut a core of material.

3. Slowly withdraw the trier, making sure that the slot is facing upward.

4. If volatile organic analyses are required, transfer the sample into an appropriate, labeled sample container with a stainless steel lab spoon, or equivalent and secure the cap tightly. Place the remainder of the sample into a stainless steel, plastic, or other appropriate homogenization container, and mix thoroughly to obtain a homogenous sample representative of the entire sampling interval. Then, either place the sample into appropriate, labeled containers and secure the caps tightly; or, if composite samples are to be collected, place a sample from another sampling interval into the homogenization container and mix thoroughly. When compositing is complete, place the sample into appropriate, labeled containers and secure the caps tightly.

7.2.4 Sampling at Depth with a Split Spoon (Barrel) Sampler

Split spoon sampling is generally used to collect undisturbed soil cores of 18 or 24 inches in length. A series of consecutive cores may be extracted with a split spoon sampler to give a complete soil column profile, or an auger may be used to drill down to the desired depth for sampling. The split spoon is then driven to its sampling depth through the bottom of the augured hole and the core extracted.

When split spoon sampling is performed to gain geologic information, all work should

be performed in accordance with ASTM D1586-98, "Standard Test Method for Penetration Test and Split-Barrel Sampling of Soils".

The following procedures are used for collecting soil samples with a split spoon:

1. Assemble the sampler by aligning both sides of barrel and then screwing the drive shoe on the bottom and the head piece on top.

2. Place the sampler in a perpendicular position on the sample material.

3. Using a well ring, drive the tube. Do not drive past the bottom of the head piece or compression of the sample will result.

4. Record in the site logbook or on field data sheets the length of the tube used to penetrate the material being sampled, and the number of blows required to obtain this depth.

5. Withdraw the sampler, and open by unscrewing the bit and head and splitting the barrel. The amount of recovery and soil type should be recorded on the boring log. If a split sample is desired, a cleaned, stainless steel knife should be used to divide the tube contents in half, longitudinally. This sampler is typically available in 2 and 3 1/2 inch diameters. A larger barrel may be necessary to obtain the required sample volume.

6. Without disturbing the core, transfer it to appropriate labeled sample container(s) and seal tightly.

7.2.5 Test Pit/Trench Excavation

A backhoe can be used to remove sections of soil, when detailed examination of soil characteristics are required. This is probably the most expensive sampling method because of the relatively high cost of backhoe operation.

The following procedures are used for collecting soil samples from test pits or trenches:

1. Prior to any excavation with a backhoe, it is important to ensure that all sampling locations are clear of overhead and buried utilities.

2. Review the site specific Health & Safety plan and ensure that all safety precautions including appropriate monitoring equipment are installed as required.

3. Using the backhoe, excavate a trench approximately three feet wide and approximately one foot deep below the cleared sampling location. Place excavated soils on plastic sheets. Trenches greater than five feet deep must be sloped or protected by a shoring system, as required by OSHA regulations.

4. A shovel is used to remove a one to two inch layer of soil from the vertical face of the pit where sampling is to be done.

5. Samples are taken using a trowel, scoop, or coring device at the desired intervals. Be sure to scrape the vertical face at the point of sampling to remove any soil that may have fallen from above, and to expose fresh soil for sampling. In many instances, samples can be collected directly from the backhoe bucket.

6. If volatile organic analyses are required, transfer the sample into an appropriate, labeled sample container with a stainless steel lab spoon, or equivalent and secure the cap tightly. Place the remainder of the sample into a stainless steel, plastic, or other appropriate homogenization container, and mix thoroughly to obtain a homogenous sample representative of the entire sampling interval. Then, either place the sample into appropriate, labeled containers and secure the caps tightly; or, if composite samples are to be collected, place a sample from another sampling interval into the homogenization container and mix thoroughly. When compositing is complete, place the sample into appropriate, labeled containers and secure the caps tightly.

7. Abandon the pit or excavation according to applicable state regulations. Generally, shallow excavations can simply be backfilled with the removed soil material.

8.0 CALCULATIONS

This section is not applicable to this SOP.

9.0 QUALITY ASSURANCE/QUALITY CONTROL

There are no specific quality assurance (QA) activities which apply to the implementation of these procedures. However, the following QA procedures apply:

1. All data must be documented on field data sheets or within site logbooks.

2. All instrumentation must be operated in accordance with operating instructions as supplied by the manufacturer, unless otherwise specified in the work plan. Equipment checkout and calibration

activities must occur prior to sampling/operation, and they must be documented.

10.0 DATA VALIDATION

This section is not applicable to this SOP.

11.0 HEALTH AND SAFETY

When working with potentially hazardous materials, follow U.S. EPA, OHSA and corporate health and safety procedures, in addition to the procedures specified in the site specific Health & Safety Plan..

12.0 REFERENCES

Mason, B.J. 1983. Preparation of Soil Sampling Protocol: Technique and Strategies. EPA-600/4-83-020.

Barth, D.S. and B.J. Mason. 1984. Soil Sampling Quality Assurance User's Guide. EPA-600/4-84-043.

U.S. Environmental Protection Agency. 1984 Characterization of Hazardous Waste Sites - A Methods Manual: Volume II. Available Sampling Methods, Second Edition. EPA-600/4-84-076.

de Vera, E.R., B.P. Simmons, R.D. Stephen, and D.L. Storm. 1980. Samplers and Sampling Procedures for Hazardous Waste Streams. EPA-600/2-80-018.

ASTM D 1586-98, ASTM Committee on Standards, Philadelphia, PA.

APPENDIX A
Figures
SOP #2012
February 2000

FIGURE 1. Sampling Augers

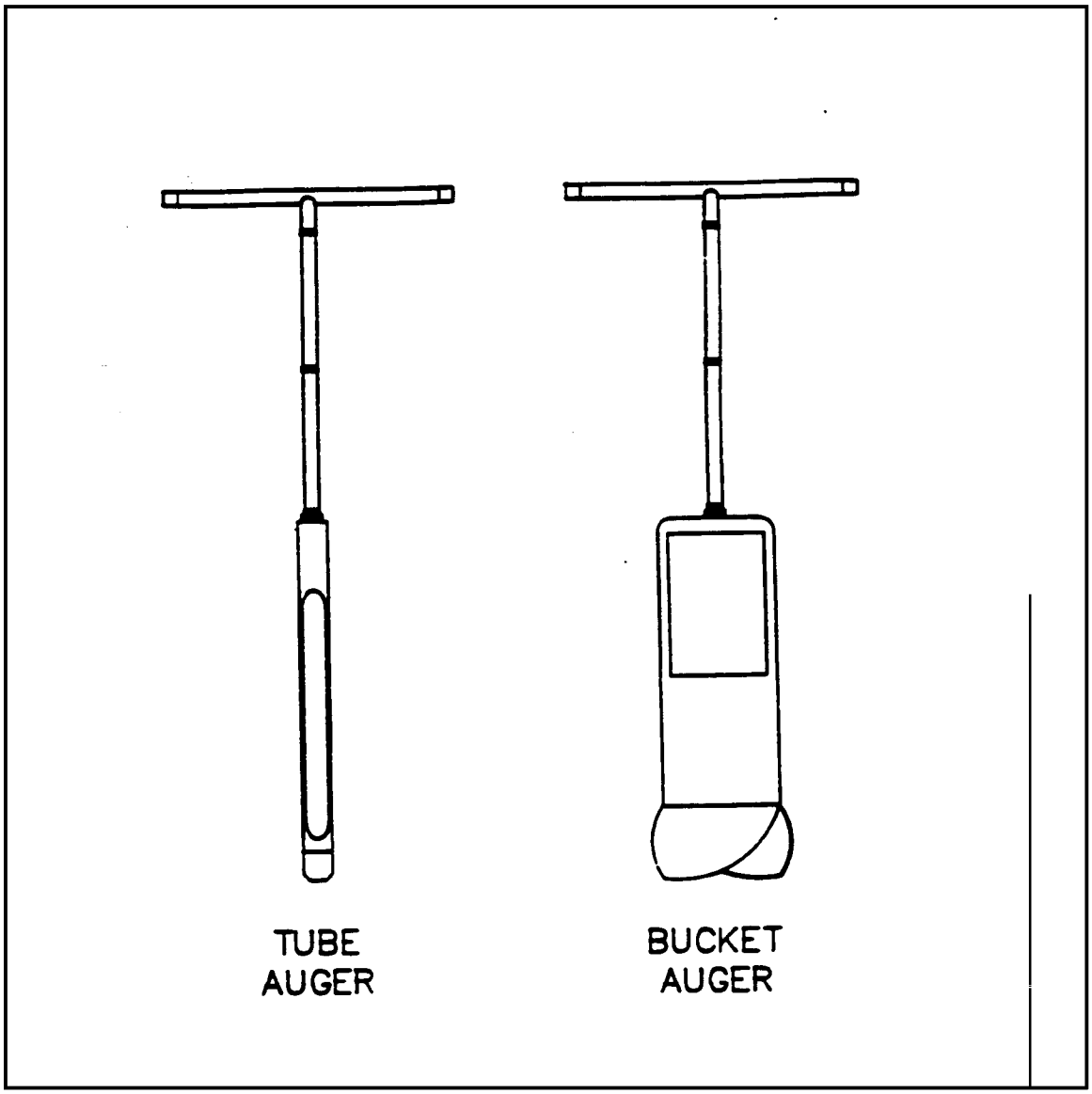

FIGURE 2. Sampling Trier

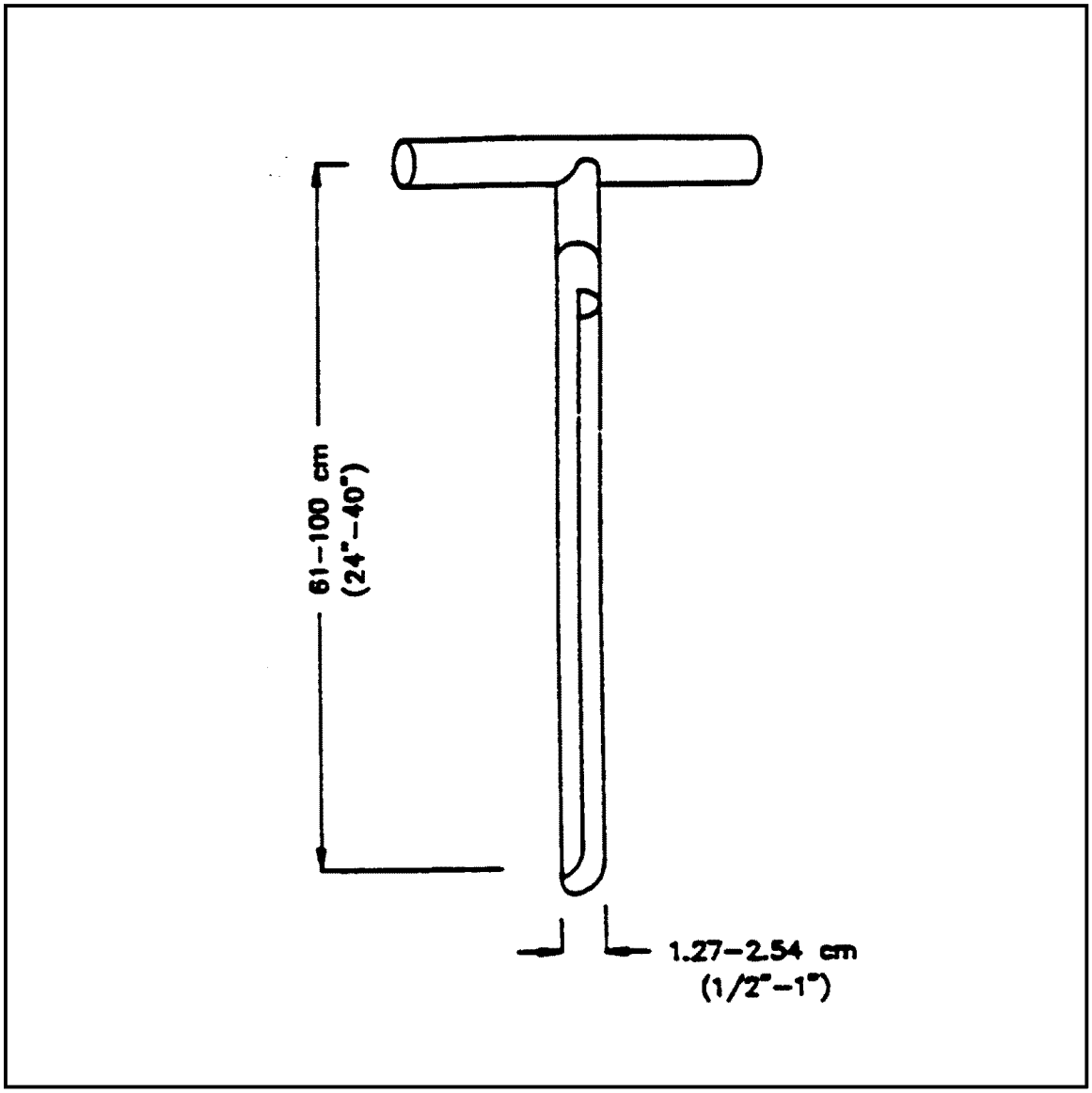

MODEL 5400 GEOPROBE™ OPERATION

SOP#: 2050
DATE: 03/27/96
REV. #: 0.0

1.0 SCOPE AND APPLICATION

The purpose of this standard operating procedure (SOP) is to describe the collection of representative soil, soil-gas, and groundwater samples using a Model 5400 Geoprobe™ sampling device. Any deviations from these procedures should be documented in the site/field logbook and stated in project deliverables.

Mention of trade names or commercial products does not constitute U.S. Environmental Protection Agency (U.S. EPA) endorsement or recommendation for use.

2.0 METHOD SUMMARY

The Geoprobe™ sampling device is used to collect soil, soil-gas and groundwater samples at specific depths below ground surface (BGS). The Geoprobe™ is hydraulically powered and is mounted in a customized four-wheel drive vehicle. The base of the sampling device is positioned on the ground over the sampling location and the vehicle is hydraulically raised on the base. As the weight of the vehicle is transferred to the probe, the probe is pushed into the ground. A built-in hammer mechanism allows the probe to be driven through dense materials. Maximum depth penetration under favorable circumstances is about 50 feet. Components of the Model 5400 Geoprobe™ are shown in Figures 1 through 6 (Appendix A).

Soil samples are collected with a specially-designed sample tube. The sample tube is pushed and/or vibrated to a specified depth (approximately one foot above the intended sample interval). The interior plug of the sample tube is removed by inserting small-diameter threaded rods. The sample tube is then driven an additional foot to collect the samples. The probe sections and sample tube are then withdrawn and the sample is extruded from the tube into sample jars.

Soil gas can be collected in two ways. One method involves withdrawing a sample directly from the probe rods, after evacuating a sufficient volume of air from the probe rods. The other method involves collecting a sample through tubing attached by an adaptor to the bottom probe section. Correctly used, the latter method provides more reliable results.

Slotted lengths of probe can be used to collect groundwater samples if the probe rods can be driven to the water table. Groundwater samples are collected using either a peristaltic pump or a small bailer.

3.0 SAMPLE PRESERVATION, CONTAINERS, HANDLING AND STORAGE

Refer to specific ERT SOPs for procedures appropriate to the matrix, parameters and sampling objector.

Applicable ERT SOPs include:

ERT #2012, Soil Sampling

ERT #2007, Groundwater Well Sampling

ERT #2042, Soil Gas Sampling

4.0 INTERFERENCES AND POTENTIAL PROBLEMS

A preliminary site survey should identify areas to be avoided with the truck. All underground utilities should be located and avoided during sampling. Begin sampling activities with an adequate fuel supply.

Decontamination of sampling tubes, probe rods, adaptors, non-expendable points and other equipment that contacts the soil is necessary to prevent cross-contamination of samples. During sampling, the bottom portion and outside of the sampling tubes can be contaminated with soil from other depth intervals.

Care must be taken to prevent soil which does not represent the sampled interval form being incorporated into the sample. Excess soil should be carefully wiped from the outside surface of the sampling tube and the bottom 3 inches of the sample should be discarded before extruding the sample into a sample jar.

The amount of sample to be collected and the proper sample container type (i.e., glass, plastic), chemical preservation, and storage requirements are dependent upon the parameter(s) of interest. Guidelines for the containment, preservation, handling and storage of soil-gas samples are described in ERT SOP #2042, Soil-Gas Sampling.

Obtaining sufficient volume of soil for multiple analyses from one sample location may present a problem. The Geoprobe™ soil sampling system recovers a limited volume of soil and it is not possible to reenter the same hole and collect additional soil. When multiple analyses are to be performed on soil samples collected with the Geoprobe™, it is important that the relative importance of the analyses be identified. Identifying the order of importance will ensure that the limited sample volume will be used for the most crucial analyses.

5.0 EQUIPMENT/APPARATUS

Sampling with the Geoprobe™ involves use of the equipment listed below. Some of the equipment is used for all sample types, others are specific to soil (S), soil gas (SG), or groundwater (GW) as noted.

- Geoprobe™ sampling device
- Threaded probe rods (36", 24", and 12" lengths)
- Drive Caps
- Pull Caps
- Rod Extractor
- Expendable Point Holders
- Expendable Drive Points
- Solid Drive Points
- Extension Rods
- Extension Rod Couplers
- Extension Rod Handle
- Hammer Anvil
- Hammer Latch
- Hammer Latch Tool
- Drill Steels
- Carbide-Tipped Drill Bit
- Mill-Slotted Well Point (GW)
- Threaded Drive Point (GW)
- Well Mini-Bailer (GW)
- Tubing Bottom Check Valve (GW)
- 3/8" O.D. Low Density Polyethylene Tubing (GW, SG)
- Gas Sampling Adaptor and Cap (SG)
- Teflon Tape
- Neoprene "O" - Rings (SG)
- Vacuum System (mounted in vehicle) (SG)
- Piston Tip (S)
- Piston Rod (S)
- Piston Stop (S)
- Sample Tube (11.5" in length) (S)
- Vinyl Ends Caps (S)
- Sample Extruder (S)
- Extruder Pistons (Wooden Dowels) (S)
- Wire Brush
- Brush Adapters
- Cleaning Brush (Bottle)

6.0 REAGENTS

Decontamination solutions are specified in ERT SOP #2006, Sampling Equipment Decontamination.

7.0 PROCEDURES

Portions of the following sections have been condensed from the Model 5400 Geoprobe™ Operations Manual(1). Refer to this manual for more detailed information concerning equipment specifications, general maintenance, tools, throttle control, clutch pump, GSK-58 Hammer, and trouble-shooting. A copy of this manual will be maintained with the Geoprobe™ and on file in the Quality Assurance (QA) office.

7.1 Preparation

1. Determine extent of the sampling effort, sample matrices to be collected, and types and amounts of equipment and supplies required to complete the sampling effort.

2. Obtain and organize necessary sampling and monitoring equipment.

3. Decontaminate or pre-clean equipment, and ensure that it is in working order.

4. Perform a general site survey prior to site

entry in accordance with the site-specific Health and Safety Plan.

5. Use stakes or flagging to identify and mark all sampling locations. All sample locations should be cleared for utilities prior to sampling.

7.2 Setup of Geoprobe™

1. Back carrier vehicle to probing location.

2. Shift the vehicle to park and shut off ignition.

3. Set parking brake and place chocks under rear tires.

4. Attach exhaust hoses so exhaust blows downwind of the sampling location (this is particularly important during soil gas sampling).

5. Start engine using the remote ignition at the Geoprobe™ operator position.

6. Activate hydraulic system by turning on the Electrical Control Switch located on the Geoprobe™ electrical control panel (Figure 1, Appendix A). When positioning the probe, always use the SLOW speed. The SLOW speed switch is located on the hydraulic control panel (Figure 2, Appendix A).

   Important: Check for clearance on vehicle roof before folding Geoprobe™ out of the carrier vehicle.

7. Laterally extend the Geoprobe™ from the vehicle as far as possible by pulling the EXTEND control lever toward the back of the vehicle while the Geoprobe™ is horizontal.

8. Using the FOOT control, lower the Derrick Slide so it is below cylinder (A) before folding the Geoprobe™ out of the carrier vehicle (Figure 3, Appendix A). This will ensure clearance at the roof of the vehicle.

9. Use the FOLD, FOOT, and EXTEND controls to place Geoprobe™ to the exact probing location. Never begin probing in the fully extended position.

10. Using the FOLD control, adjust the long axis of the probe cylinder so that it is perpendicular (visually) to the ground surface.

11. Using the FOOT control, put the weight of the vehicle on the probe unit. Do not raise the rear of the vehicle more than six inches.

    Important: Keep rear vehicle wheels on the ground surface when transferring the weight of the vehicle to the probe unit. Otherwise, vehicle may shift when probing begins.

12. When the probe axis is vertical and the weight of the vehicle is on the probe unit, probing is ready to begin.

7.3 Drilling Through Surface Pavement or Concrete

1. Position carrier vehicle to drilling location.

2. Fold unit out of carrier vehicle.

3. Deactivate hydraulics.

4. Insert carbide-tipped drill bit into hammer.

5. Activate HAMMER ROTATION control by turning knob counter-clockwise (Figure 4, Appendix A). This allows the drill bit to rotate when the HAMMER control is pressed.

6. Press down on HAMMER control to activate counterclockwise rotation.

7. Both the HAMMER control and the PROBE control must be used when drilling through the surface (Figure 4, Appendix A). Fully depress the HAMMER control, and incrementally lower the bit gradually into the pavement by periodically depressing the PROBE control.

8. When the surface has been penetrated, turn the HAMMER Control Valve knob

clockwise to deactivate hammer rotation and remove the drill bit from the HAMMER.

Important: Be sure to deactivate the rotary action before driving probe rods.

7.4 Probing

1. Position the carrier vehicle to the desired sampling location and set the vehicle parking brake.

2. Deploy Geoprobe™ Sampling Device.

3. Make sure the hydraulic system is turned off.

4. Lift up latch and insert hammer anvil into hammer - push latch back in (Figure 5, Appendix A).

5. Thread the drive cap onto the male end of the probe rod.

6. Thread an expendable point holder onto the other end of the first probe rod.

7. Slip an expendable drive point into point holder.

8. Position the leading probe rod with expendable drive point in the center of the derrick foot and directly below the hammer anvil.

   Important: Positioning the first probe rod is critical in order to drive the probe rod vertically. Therefore, both the probe rod and the probe cylinder shaft must be in the vertical position (Figure 6, Appendix A).

9. To begin probing, activate the hydraulics and push the PROBE Control downward. When advancing the first probe rod, always use the SLOW speed. Many times the probe rods can be advanced using only the weight of the carrier vehicle. When this is the case, only the PROBE control is used.

   Important: When advancing rods, always keep the probe rods parallel to the probe cylinder shaft (Figure 6, Appendix A). This is done by making minor adjustments with the FOLD control. Failure to keep probe rods parallel to probe cylinder shaft may result in broken rods and increased difficulty in achieving desired sampling depth.

7.5 Probing - Percussion Hammer

The percussion hammer must be used in situations where the weight of the vehicle is not sufficient to advance the probe rods.

1. Make sure the Hammer Rotation Valve is closed.

2. Using the PROBE control to advance the rod, press down the HAMMER control to allow percussion to drive the rods (Figure 2, Appendix A).

   Important: Always keep static weight on the probe rod or the rod will vibrate and chatter while you are hammering, causing rod threads to fracture and break.

3. Keep the hammer tight to the drive cap so the rod will not vibrate.

4. Periodically stop hammering and check if the probe rods can be advanced by pushing only.

5. Any time the downward progress of the probe rods is refused, the derrick foot may lift off of the ground surface. When this happens, reduce pressure on the PROBE control. Do not allow the foot to rise more than six inches off the ground or the vehicle's wheels may lift off the ground surface, causing the vehicle to shift (Figure 6, Appendix A).

6. As the derrick foot is raised off the ground surface, the probe cylinder may not be in a perpendicular position. If this happens, use the FOLD control to correct the probe cylinder position.

7.6 Probing - Adding Rods

1. Standard probe rods are three feet in length. If the desired depth is more than three feet,

another rod must be threaded onto the rod that has been driven into the ground. In order to ensure a vacuum-tight seal (soil-gas sampling), two wraps of teflon tape around the thread is recommended.

2. Using the PROBE control, raise the probe cylinder as high as possible.

Important: Always deactivate hydraulics when adding rods.

3. Deactivate hydraulics.

4. Unthread the drive cap from the probe rod that is in the ground.

5. Wrap teflon tape around the threads.

6. Thread the drive cap onto the male end of the next probe rod to be used.

7. After threading the drive cap onto the rod to be added, thread the rod onto the probe rod that has been driven into the ground. Make sure threads have been teflon taped. Continue probing.

8. Continue these steps until the desired sampling depth has been reached.

7.7 Probing/Pulling Rods

1. Once the probe rods have been driven to depth, they can also be pulled using the Geoprobe™ Machine.

2. Turn off the hydraulics.

3. Lift up latch and take the hammer anvil out of the hammer.

4. Replace the drive cap from the last probe rod driven with a pull cap.

5. Lift up the hammer latch.

6. Activate the hydraulics.

7. Hold down on the PROBE control, and move the probe cylinder down until the latch can be closed over the pull cap.

Important: If the latch will not close over the pull cap, adjust the derrick assembly by using the extend control. This will allow you to center the pull cap directly below the hammer latch.

8. Retract the probe rods by pulling up on the PROBE control.

Important: Do not raise the probe cylinder all the way when pulling probe rods or it will be impossible to detach a rod that has been pulled out. However, it is necessary to raise the probe cylinder far enough to allow the next probe section to be pulled.

9. After retracting the first probe rod, lower the probe cylinder only slightly to ease the pressure off of the hammer latch.

10. Attach a clamping device to the base of the rods where it meets the ground to prevent rods from falling back into the hole.

11. Raise the hammer latch.

12. Hold the PROBE control up and raise the probe cylinder as high as possible.

13. Unthread the pull cap from the retracted rod.

14. Unthread the retracted rod.

15. Thread the pull cap onto the next rod that is to be pulled.

16. Continue these steps until all the rods are retracted from the hole.

17. Decontaminate all portions of the equipment that have been in contact with the soil, soil gas and groundwater.

7.8 Soil-Gas Sampling Without Interior Tubing

1. Follow procedures outlined in Sections 7.1 through 7.6.

2. Remove hammer anvil from hammer.

3. Thread on pull cap to end of probe rod.

4. Retract rod approximately six inches. Retraction of the rod disengages expendable drive point and allows for soil vapor to enter rod.

5. Unthread pull cap and replace it with a gas sampling cap. Cap is furnished with barbed hose connector.

   Important: Shut engine off before taking sample (exhaust fumes can cause faulty sample data).

6. Turn vacuum pump on and allow vacuum to build in tank.

7. Open line control valve. For each rod used, purge 300 liters of volume. Example: Three rods used = 900 liters = .900 on gauge.

8. After achieving sufficient purge volume, close valve and allow sample line pressure gauge to return to zero. This returns sample train to atmospheric pressure.

9. The vapor sample can now be taken.

   1. Pinch hose near gas sampling cap to prevent any outside vapors from entering the rods.

   2. Insert syringe needle into center of barbed hose connector and withdraw vapor sample.

10. To maintain suction at the sampling location, periodically drain the vacuum tank.

11. To remove rods, follow procedures outlined in Section 7.7.

7.9 Soil-Gas Sampling With Post-Run Tubing (PRT)

1. Follow procedures outlined in Sections 7.1 through 7.6.

2. Retract rod approximately six inches. Retraction of rod disengages expendable drive point and allows for soil vapor to enter rod.

3. Remove pull cap from the end of the probe rod.

4. Position the Geoprobe™ to allow room to work.

5. Secure PRT Tubing Adapter with "O" - Ring to selected tubing.

6. Insert the adapter end of the tubing down the inside diameter of the probe rods.

7. Feed the tubing down the hole until it hits bottom on the expendable point holder. Cut the tubing approximately two feet from the top probe rod.

8. Grasp excess tubing and apply some downward pressure while turning it in a counter-clockwise motion to engage the adapter threads with the expendable point holder.

9. Pull up lightly on the tubing to test engagement of threads.

10. Connect the outer end of the tubing to silicon tubing and vacuum hose (or other sampling apparatus).

11. Follow the appropriate sampling procedure (ERT SOP #2042, Soil Gas Sampling) to collect a soil-gas sample.

12. After collecting a sample, disconnect the tubing from the vacuum hose or sampling system.

13. Pull up firmly on the tubing until it releases from the adapter at the bottom of the hole.

14. Extract the probe rods from the ground and recover the expendable point holder with the attached adapter.

15. Inspect the "O"-ring at the base of the adapter to verify that proper sealing was achieved during sampling. The "O"-ring should be compressed.

Note: If the "O"-ring is not compressed, vapors from within the probe sections may have been collected rather than vapors from the intended sample interval.

7.10 Soil Sampling

1. Follow procedures outlined in Sections 7.1 through 7.6.

2. Assemble soil-sampling tube.

    1. Thread piston rod into piston tip.

    2. Insert piston tip into sample tube, seating piston tip into cutting edge of sample tube.
    3. Thread drive head into threaded end of sample tube.

    4. Thread piston stop pin into drive head. Stop pin should be tightened with wrench so that it exerts pressure against the piston rod.

3. Attach assembled sampler onto leading probe rod.

4. Drive the sampler with the attached probe rods to the top of the interval to be sampled.

5. Move probe unit back from the top of the probe rods to allow work room.

6. Remove drive cap and lower extension rods into inside diameter of probe rods using couplers to join rods together.

7. Attach extension rod handle to top extension rod.

8. Rotate extension rod handle clockwise until the leading extension rod is threaded into the piston stop in downhole.

9. Continue to rotate extension rod handle clockwise until reverse-threaded stop-pin has disengaged from the drive head.

10. Remove extension rods and attached stop-pin from the probe rods.

11. Replace drive cap onto top probe rod.

12. Mark the top probe rod with a marker or tape at the appropriate distance above the ground surface (dependent on sample tube length).

13. Drive probe rods and sampler the designated distance. Be careful not to overdrive the sampler which could compact the soil sample in the tube, making it difficult to extrude.

    Important: Documentation of sample location should include both surface and subsurface identifiers. Example: Correct Method - Sample Location S-6, 12.0' - 13.0'. Incorrect Method - Sample Location S-6, 12.0'.

14. Retract probe rods from the hole and recover the sample tube. Inspect the sample tube to confirm that a sample was recovered.

15. Disassemble sampler. Remove all parts.

16. Position extruder rack on the foot of the Geoprobe™ derrick.

17. Insert sample tube into extruder rack with the cutting end up.

18. Insert hammer anvil into hammer.

19. Position the extruder piston (wood dowel) and push sample out of the tube using the PROBE control on the Geoprobe™. Collect the sample as it is extruded in an appropriate sample container.

    Caution: use care when performing this task. Apply downward pressure gradually. Use of excessive force could result in injury to operator or damage to tools. Make sure proper diameter extruder piston is used.

20. To remove rods follow procedures outlined in Section 7.7.

7.11 Groundwater Sampling

1. Follow Sections 7.1 thorough 7.6 with the following exception: the Mill-Slotted Well Rod with attached threaded drive point should be the first section probed into the ground. Multiple sections of mill-slotted well rods can be used to provide a greater vertical section into which groundwater can flow.

2. Probe to a depth at which groundwater is expected.

3. Remove Drive Cap and insert an electric water-level indicator to determine if water has entered the slotted sections of probe rod. Refer to ERT SOP #2043, Water Level Measurement, to determine water level.

4. If water is not detected in the probe rods, replace the drive cap and continue probing. Stop after each additional probe length and determine if groundwater has entered the slotted rods.

5. After the probe rods have been driven into the saturated zone, sufficient time should be allowed for the water level in the probe rods to stabilize.

   Note: It will be difficult if not impossible to collect a groundwater sample in aquifer material small enough to pass through the slots (<0.02 inch diameter).

6. Groundwater samples may be collected with the 20-mL well Mini-Bailer or a pumping device. If samples are being collected for volatile organic analysis (VOA), the 20-mL Well Mini-Bailer should be used. If samples are being collected for a variety of analyses, VOA samples should be collected first using the bailer. Remaining samples can be collected by pumping water to the surface. Withdrawing water with the pump is more efficient than collecting water with the 20-mL well Mini-Bailer.

   Important: Documentation of sample location should include both surface and subsurface identifiers. Example: Sample Location GW-6, 17'-21' bgs, water level in probe rods is 17 feet bgs, and the leading section of probe rod is 21 feet bgs. The water sample is from this zone, not from 17 feet bgs or 21 feet bgs.

7. Remove rods following procedures outlined in Section 7.7.

8.0 CALCULATIONS

Calculating Vapor Purge Volume for Soil-Gas Sampling without Interior Tubing

Volume of Air to be Purged (Liters) = 300 x Number of Rods in the Ground

Volume in Liters/1000 = Reading on Vacuum Pump Instrument Gauge

9.0 QUALITY ASSURANCE/ QUALITY CONTROL

The following general QA procedures apply:

1. All data must be documented on field data sheets or within site logbooks.

2. All instrumentation must be operated in accordance with operating instructions as supplied by the manufacturer, unless otherwise specified in the work plan. Equipment checkout and calibration activities must occur prior to sampling/operation and they must be documented.

10.0 DATA VALIDATION

This section is not applicable to this SOP.

11.0 HEALTH AND SAFETY

When working with potentially hazardous materials, follow U.S. EPA, OSHA and the REAC site specific Health and Safety Plan. The following is a list of health and safety precautions which specifically apply to Geoprobe™ operation.

1. Always put vehicle in "park", set emergency the brake, and place chocks under the tires, before engaging remote ignition.

2. If vehicle is parked on a loose or soft surface, do not fully raise rear of vehicle with probe foot, as vehicle may fall or move.

3. Always extend the probe unit out from the vehicle and deploy the foot to clear vehicle roof line before folding the probe unit out.

4. Operators should wear OSHA approved steel-toed shoes and keep feet clear of probe foot.

5. Operator should wear ANSI approved hard hats.

6. Only one person should operate the probe machine and the assemble or disassemble probe rods and accessories.

7. Never place hands on top of a rod while it is under the machine.

8. Turn off the hydraulic system while changing rods, inserting the hammer anvil, or attaching accessories.

9. Operator must stand on the control side of the probe machine, clear of the probe foot and mast, while operating controls.

10. Wear safety glasses at all times during the operation of this machine.

11. Never continue to exert downward pressure on the probe rods when the probe foot has risen six inches off the ground.

12. Never exert enough downward pressure on a probe rod so as to lift the rear tires of the vehicle off the ground.

13. Always remove the hammer anvil or other tool from the machine before folding the machine to the horizontal position.

14. The vehicle catalytic converter is hot and may present a fire hazard when operating over dry grass or combustibles.

15. Geoprobe™ operators must wear ear protection. OSHA approved ear protection for sound levels exceeding 85 dba is recommended.

16. Locations of buried or underground utilities and services must be known before starting to drill or probe.

17. Shut down the hydraulic system and stop the vehicle engine before attempting to clean or service the equipment.

18. Exercise extreme caution when using extruder pistons (wooden dowels) to extrude soil from sample tubes. Soil in the sample tube may be compacted to the point that the extruder piston will break or shatter before it will push the sample out.

19. A dry chemical fire extinguisher (Type ABC) should be kept with the vehicle at <u>all</u> times.

12.0 REFERENCES

1. Model 5400 Geoprobe™ Operations Manual. Geoprobe™ Systems, Salina, Kansas. July 27, 1990.

2. Geoprobe™ Systems - 1995-96 Tools and Equipment Catalog.

APPENDIX A

Figures

FIGURE 1. Electrical Control Panel

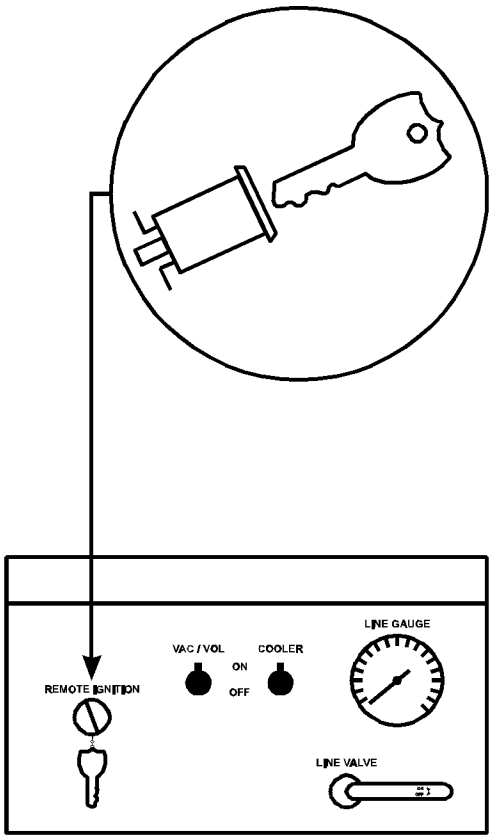

APPENDIX A (Cont'd)

Figures

FIGURE 2. Hydraulic Control Panel

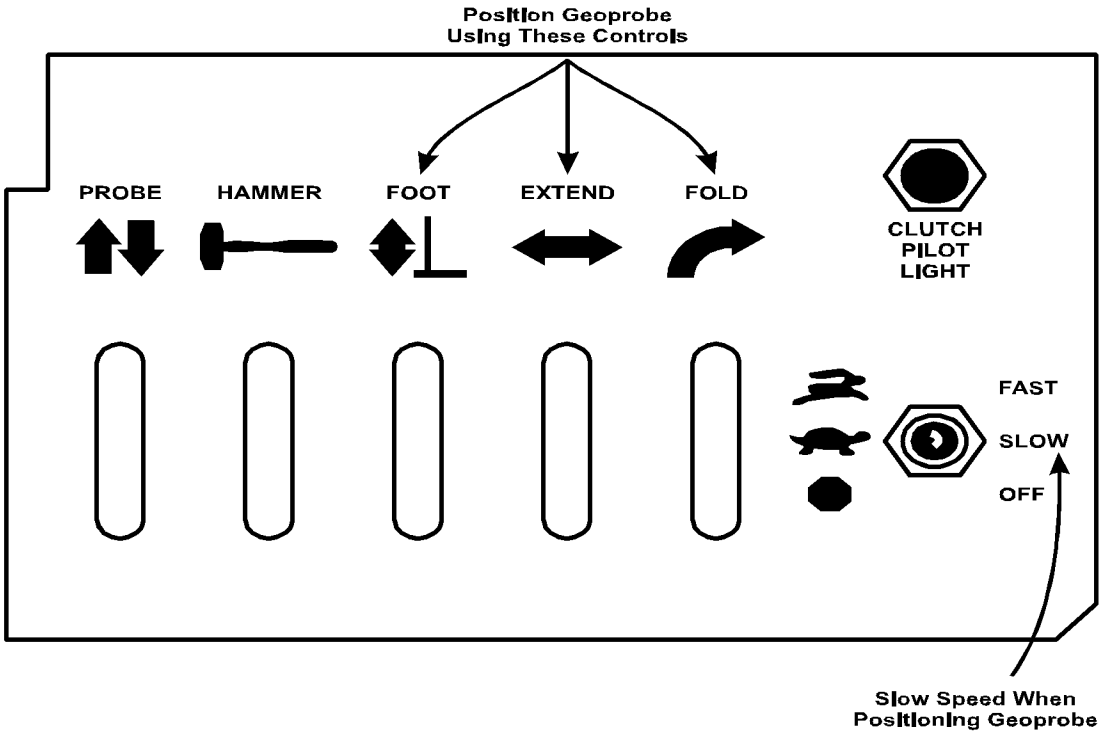

APPENDIX A (Cont'd)

Figures

FIGURE 3. Deployment of Geoprobe™ from Sampling Vehicle

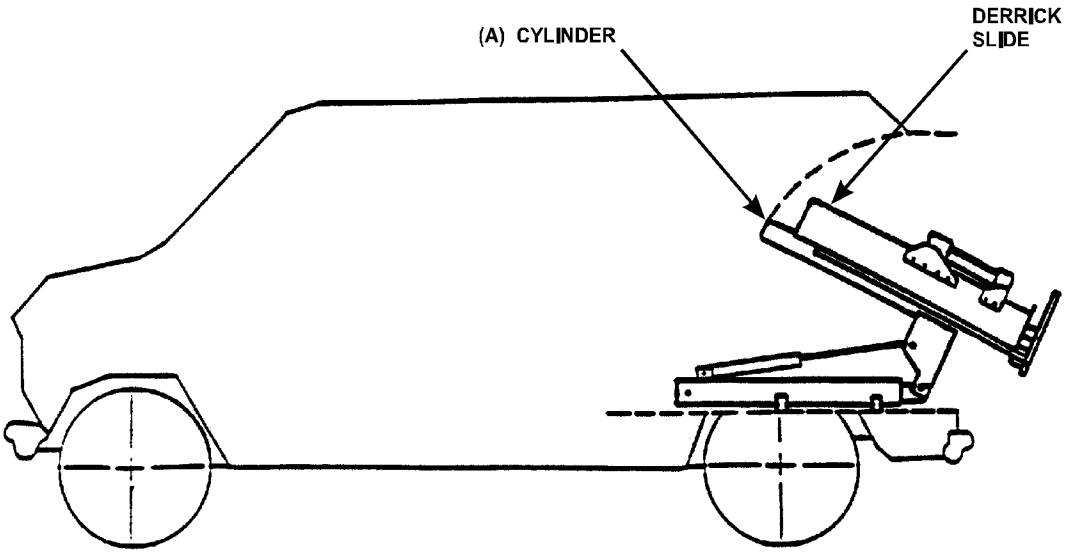

APPENDIX A (Cont'd)

Figures

FIGURE 4. Geoprobe ™ Setup for Drilling Through Concrete and Pavement

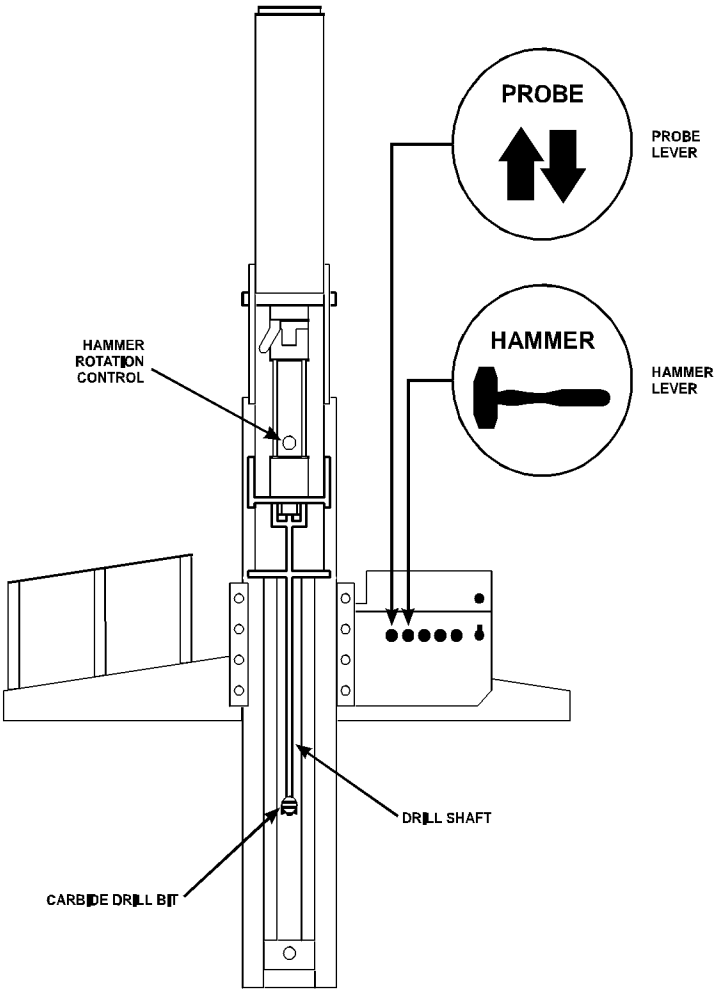

APPENDIX A (Cont'd)

Figures

FIGURE 5. Inserting Hammer Anvil

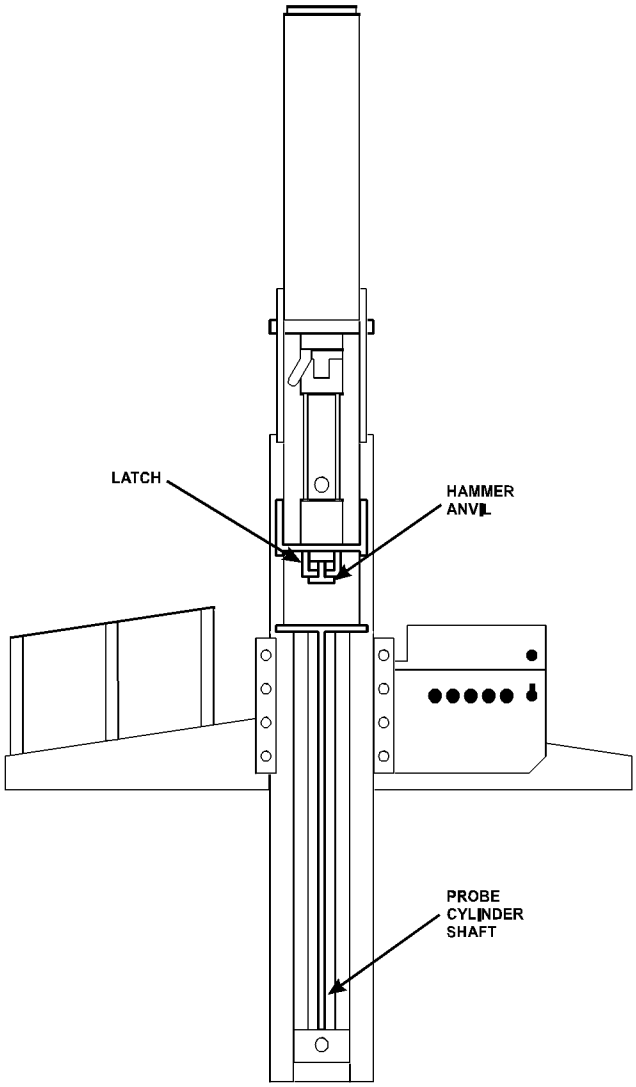

APPENDIX A (Cont'd)

Figures

FIGURE 6. Probe Cylinder Shaft and Probe Rod - Parallel and Vertical

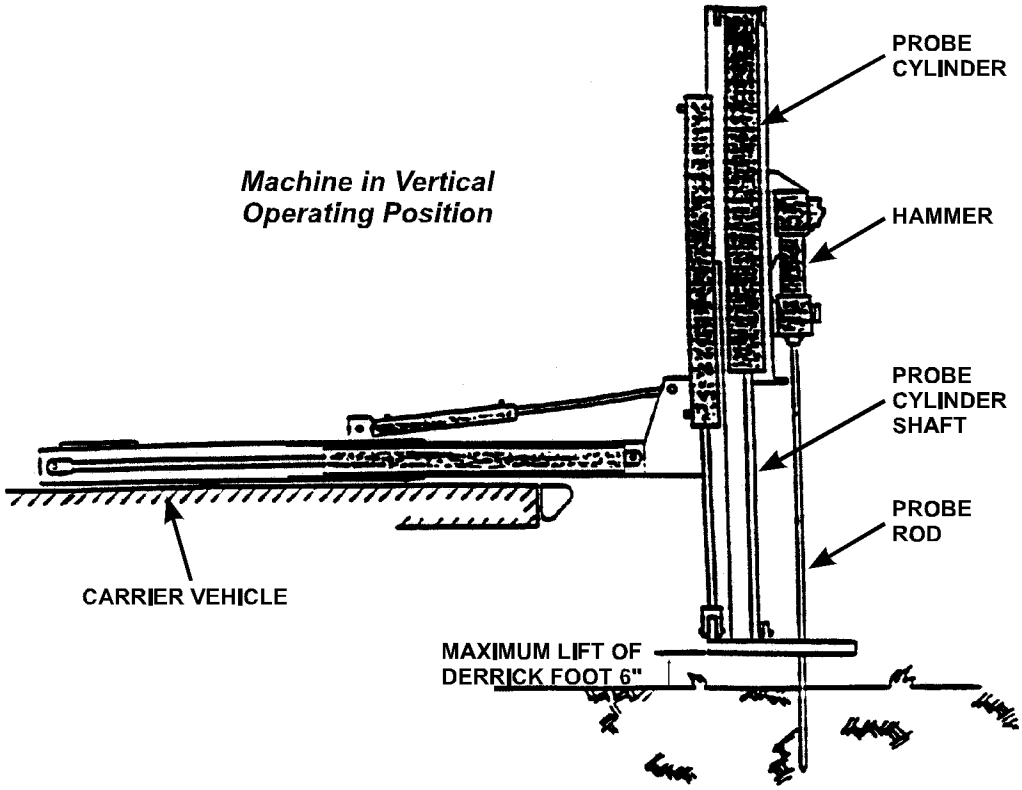

ATTACHMENT C

Protocol for Conduction Radon and Radon Decay
Product Measurements in Multifamily Buildings

Limited License, CRCPD National Radon Training Meeting, September 28, 2014, Not for Reprint or Resale.

Limited License, CRCPD National Radon Training Meeting, September 28, 2014, Not for Reprint or Resale.

Limited License, CRCPD National Radon Training Meeting, September 28, 2014, Not for Reprint or Resale.

Informational Section

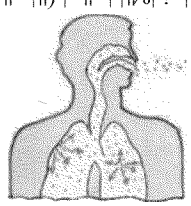

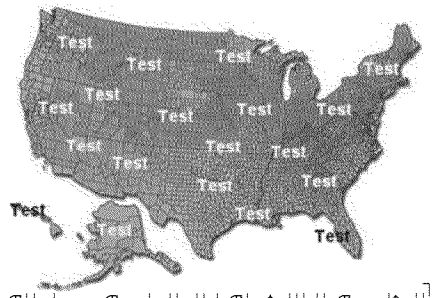

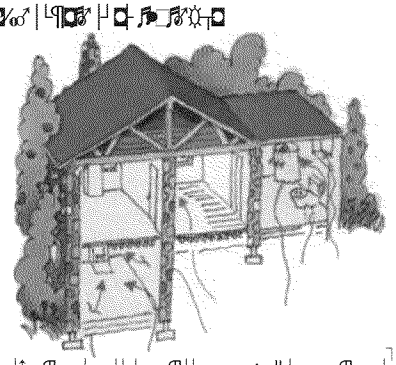

Limited License, CRCPD National Radon Training Meeting, September 28, 2014, Not for Reprint or Resale.

Limited License, CRCPD National Radon Training Meeting, September 28, 2014, Not for Reprint or Resale.

Informational Section

Limited License, CRCPD National Radon Training Meeting, September 28, 2014, Not for Reprint or Resale.

Limited License, CRCPD National Radon Training Meeting, September 28, 2014, Not for Reprint or Resale.

Informal Section

Limited License, CRCPD National Radon Training Meeting, September 28, 2014, Not for Reprint or Resale.

Protocol

Limited License, CRCPD National Radon Training Meeting, September 28, 2014, Not for Reprint or Resale.

Limited License, CRCPD National Radon Training Meeting, September 28, 2014, Not for Reprint or Resale.

Limited License, CRCPD National Radon Training Meeting, September 28, 2014, Not for Reprint or Resale.

Limited License, CRCPD National Radon Training Meeting, September 28, 2014, Not for Reprint or Resale.

Limited License, CRCPD National Radon Training Meeting, September 28, 2014, Not for Reprint or Resale.

Limited License, CRCPD National Radon Training Meeting, September 28, 2014, Not for Reprint or Resale.

Limited License, CRCPD National Radon Training Meeting, September 28, 2014, Not for Reprint or Resale.

Limited License, CRCPD National Radon Training Meeting, September 28, 2014, Not for Reprint or Resale.

Limited License, CRCPD National Radon Training Meeting, September 28, 2014, Not for Reprint or Resale.

Limited License, CRCPD National Radon Training Meeting, September 28, 2014, Not for Reprint or Resale.

Limited License, CRCPD National Radon Training Meeting, September 28, 2014, Not for Reprint or Resale.

Limited License, CRCPD National Radon Training Meeting, September 28, 2014, Not for Reprint or Resale.

Limited License, CRCPD National Radon Training Meeting, September 28, 2014, Not for Reprint or Resale.

Informational Section

Limited License, CRCPD National Radon Training Meeting, September 28, 2014, Not for Reprint or Resale.

Limited License, CRCPD National Radon Training Meeting, September 28, 2014, Not for Reprint or Resale.

Limited License, CRCPD National Radon Training Meeting, September 28, 2014, Not for Reprint or Resale.

Limited License, CRCPD National Radon Training Meeting, September 28, 2014, Not for Reprint or Resale.

Limited License, CRCPD National Radon Training Meeting, September 28, 2014, Not for Reprint or Resale.

+←☼¶□!DEB□♂&□

6└ ├□%┐ □←┘●●"-□%┐. ─┘●□←┤●□-□%/┐P │└┤ ┐│* │ ┬└┐ ←←┤●□ ""P┬┘ → ("└●,┐ !→→"P-□%┐,┬└ *┐ ─┐ └□│" ├●□├,┐│*└P┐←●-□●│ !→→"P┐,┬└ *┐ ─┐ └□│" ├●□├┐│*└P┐ ┬└┤ ●┬└│└*□┘ ""P─┬└, └─┬└┐│●┐ ┐6 # ┐P │└┤ │

● □EBCA□♂ □BCFA└ □EE□-│ ─┐ .┐└└┼ ←●□┐↕ └ !┬└┤ └□│┐1┐●,└ →●□ "/┐

● □BC□ BC□- □DEB□♂&□ □P┐P │└┤ ┬└ %□└┐│●─┐└─!┘└─┐ ←●□┐●□┘└□│┬ ├●□ ┬□┐│*└┐□←●●─┐ ─┐●,┐ ┐(!"←□%│┐

● CB□♂□| D□CC□┼□& □ □ ┐(!"←□%┐)─│*┐┤ ●┬└┐│* □┐│*┬└└┐ ‖ ┘*└←┬) └""□% │─┐

┐□└CA□□F¶□&□□ 9□└┐→#─┐●□└│┬""●□│*┐●,┐ ┘!┬└┐.♂└&¶/┐●┐┬└┘□:┬─ □│%┐ ├●□ ┐┐└┐ └●□←┐●┐¶│¶¶┐ ←□│%┐ ├●□ ┐┐└┐ □!│└│─┐

┐□└CA□□F □□B□A□ □F¶□ &┐ ┐!□─│●,┐●□┘└□│┬ ├●□┐●,─┐ ←● ┘├─ ─│P┐●┐┬└ →●□←□%┐│●┐□ └┘│□:┬└ P ┐┐└┐ └●□←┐●┐¶│¶¶┐←└ P ┐┐└┐ □!│└┐□┐ ┐"┐└┐●,┐ ─┐●┐) │└┐│♂┐┐#─☼0┐C┐□:┐ (└'!└└" ┐┐└┐!(┘┐ └│└┐.2'☼ □/│┐

C□BD□EECA┘□ □ ☼&□ ┐●┤ →"└│└┐●%┐┤ ┬└ %□└┐│●┐┐●←!┘└┐└ !"│┐) *┘*┐ ┐└ "←┐ ┘└□├,┘ ""P┬└, └□ ┐("└┐ □←┐ ●,┐-□●) □┐┐└┘──●□┐(─ ┐ □←┐ └┘!┐┘P│ □"!←└ ┐" □□□%┐┐●┘!┤ └□│ ├●□┐ □←┐'! "┐P┐●□│┐●"┐ . #/┐ ┘├─┼└ │┐┐

C□BD□¶└ BA└□ ¶&┐ ◀*└┐P │└┤ ┐●,┐ ┘├─┼└ ┐│●┐└□ !┐└┐ ┐'! "┐P┐┐●←!┘│┐□"!←□%┐│ └ !┐└┤ └□│ ┐│ ←└┐│●┐└□ !┐└┐ □←┐│ ●□┐●┐┬└ │┐'! "┐P│□"!←└ ┐ "┐(┐ ├●□ ┐ □←┐(┘-%┐●!□← ┼┐←!→"└┘ │└┐(" □-┐ □←┐ →─ └┐ │ └ !┐└┤ └□│┐□│└$" (●┐ │●┐P┐●│ → ┐ ●□ ┐ !←│┐ □←┐●│*└┐┘●□│●"┐ ┘├─┼└ │┐┐

┴┼└ □┴&┐ ┐●"●┐"└ ┐●←●┐"└ ┐□ │!┐ ""P┐●┘┘!┐┐□%┐┐ ←● ┘├─ └┐□└┐│%└● ! ┐└"└│ └□│┐,●┐│ └─┐(P┐ ┐ ←● ┘├─ └┐└ P┐●,┐ ←│┤ ┐.┼ $¶¶?/┐ │●│ │◀*└┐ │●│ ┘-□!│ (└┐┐ ┐?┐│"│*● !%* ┐●│*└┐ −● │●→└ ┐●,┐ ←●□┐●┘┘!┐┐□-□ │!┐└┐┐□┐│*−┐←●┘!│ └□│┐┐ ←●□┐└, └┐●┐│* └% ┼□$¶¶¶│□□□

┴┼└ □" □EBCA□♂ □B□□ □ FA└ □EE□-& □□□ □ □ □ □P┐ │ │└"┘└□ └┐●┐□ │●□ ""P┘└│┐,└┐┐└ ●□┐●┐└□│┐│P┐│* │┐●□←!┘│ ┐ ←●□┐│└ │□%┐,●┐□ ┐└│ !□└┐ │●□│┐ ┐┐●,└ ←●□ "┐*●"← ┐ ┘!┐┐□│┐ ←●□┐"┘└□ └┐,┐●│ ┐ ┐ │ │└┐) * └└┐ ←●□┐│└ │□%┐ └ ┘└ ┐ ┐└┐%!" │└┐●┐┐!┐┐□│┐□ │●□ "┘└│┐,┘ │●□┐┐└●%□-R└┐(P┐│*└┐ │ │└□┐) *┘*┐│*└│└ │┐ −┐(└□%┐●□←!┘│└│┐9┐┐,┐│*└│└ │□%┐ ┐(└□%┐●□←!┘│└│┐□┐ ┐□●□$┐%!" │└┐ │ │└┐│*└□┐│*└ →┐●,└ →●□ "┐ *●!"←┐* └┘!┐┐□│┐└│┐,┘ │●□┐┐└●%□-R└┐(P┐│*└□●□$┐%!" │└┐ │ │└┐□

┴□│BCH□□ □A┘□BC□□ □A┘□ □ ◀*└┐└" │ └┐└┘└□│┐←,, └┐□┘└┐(└│) └└□┐ ┐ ┐●,┐←!→"┘ │└┐ └ !┐└┤ └□│┐←└│└│●┐ ┐←┐ "┘!" │└┐ (P┐← ←□%┐│*└┐←,, └┐□┘└┐(└│) └└□┐│*└│) ●┐└ !"│┐(P┐│*└ └%└●,┐│*└│) ●┐└ !"│┐ □←┐ ┤ !"│→"P-□%┐(P┐♂└└│┐

┼1 ┐C┐DW5┐Q┐>W☼>│4F┐O┐♂└└=┐

)*└┐└┐

E♂┐C┐└ !"│┐●,┐←└│└│ │●┐┐♂┐

E¶┐C┐└ !"│┐●,┐←└│└│ │●┐┐¶│

LE♂┐Q┐E¶LC┐ (●"! │└ "! └┐●,┐│*└┐←,, └┐□┘└┐(└│) └└□┐←└│└│ │●┐ ┐♂┐ □←┐¶│

E ┐C┐ └┐%└┐●□┘└□│┐ ├●□┐C┐..E♂┐A┐E¶/☼¶/┐

&O┤ →"└ ┐

E♂┐C┐5│└┐ □←┐E¶┐C┐>│└┐

┼1 ┐C┐DW5┐Q┐>W☼>│4F┐O┐♂└└=┐C┐♂☼>│4┐O┐♂└└=┐C┐♂♂│>=┐

┴□│BCH□□ □A┘□BC□ AA└A□□ ┐ ◀*└┐└" │ └┐└┘└□│┐└┐●┐.┼1&/┐ ┐│*└┐←,, └┐□┘└┐(└│) └└□┐│*└┐-□●) □┐●┐┐└, └┐□┘└┐ ┘●□┘└□│┐ ├●□┐●,┐ ←●□┐! └┐(P┐ ┐* ┤ (└┐│●┐ →─ └┐ ┐←└│└│ │●┐ □←┐│*└┐└ !"│□%┐│ └ !┐└┤ └□│┐ "! └┐ , │└┐ □ "P −┐●,┐│*└┐ →─ └┐ ┤ →"└┐└O┐→┐└ └┐ ┐ ┐→└┘ └□│%└●,┐│*└┐-□●) □┐

Limited License, CRCPD National Radon Training Meeting, September 28, 2014, Not for Reprint or Resale.

Limited License, CRCPD National Radon Training Meeting, September 28, 2014, Not for Reprint or Resale.

Limited License, CRCPD National Radon Training Meeting, September 28, 2014, Not for Reprint or Resale.

Limited License, CRCPD National Radon Training Meeting, September 28, 2014, Not for Reprint or Resale.

¶□ ◀*└" (●┬ |●┬P┐ □ "PR-□%σ|*└←└|└┘ |●┬ ┐ *●!"←┐□● ├(└ ("└|●┬┬└┘●%□-R└3⁄ƒ%2¬●┬ 0┴□♬/●─┤‼●┬└O ┤ →"└┐ ,|└┬┬└┤┬┴ -□%σ
|*└ └O→● └─┐←└|└┘ |●┬┼3⁄ƒ%2┐←└|└┘ |●┬ ┐┤ ! ├(└┐┤ -O└─┐-□┐)─|*┐ |*└ └O→● └─┐←└|└┘ |●┬ ┐,●┬ *→┤ └□|├#●□ !"├) ─|*┐ |*└
┤ □!, ┘|!┬└☼ (●┬ |●┬P┐ |●┐-□ !┬└┐←└|└┘ |●┐$ →└─,┘ ┐→┐●┘└←!┬└ ┐ →→┐● └─┐(P┐ |*└┐┤ □!, ┘|!┬└☼ (●┬ |●┬P┐ ┬└┐! └─┐) * └□┐
┘●□←!┘ |□%σ(" □-┬┤ └ !┬└┤ └□| ├ ,┐ →→┐●→┬ |└┐ └ " ┐●□┐|*└┐(" □- ┬┤ %*|┐(└┐(┐● - └□┐-□┐ ●┤ └┘ └┐|*└←└|└┘ |●┬┐) ● !"←┐(└
●→└□└─┐ □←┐┤ ┤ └─ |└"P┐┘"● └←/┐ □←┐┬└ └ "└─┐□┐|*└┐ ┤ └┐| □□└┐ ┐|*└←└→"●P└─┐←└|└┘ |●┬ ├0●%σ┐ *└└| ┐→┐● ←└─┐|●┐|*└
" (●┬ |●┬P┐ *●!"←┐ " ●┐●(┘!┬└┐) *┘*┬←└|└┘ |●┬ ┐ ┬└┐3⁄ƒ%2¬┐ □←┐ 0┴□♬/●─┤

¶↑├ &□ !┬└←└|└┘ |●┬ ┐ ┬└←└"– └┬└←┐|●┐|*└┐ □ "PR-□%σ" (●┬ |●┬P┐) ─|*-□┐|*└┐ | |└─┐├┤ └,┬┤ └├┐

┐A□F A□ □- □F└AB□◀ └C♂ □BE┐

¶4├ #●┤ →"└┐|└ ├┬ | ┬□|●┐ ┬└→●┬├,●┬┤ ┐.┐ └└┐ └┘├●□┐ ┬┐ !(└┘├●□┬>/├┐

Limited License, CRCPD National Radon Training Meeting, September 28, 2014, Not for Reprint or Resale.

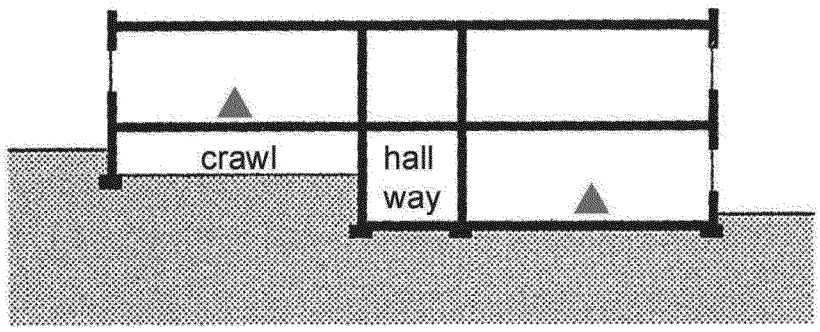

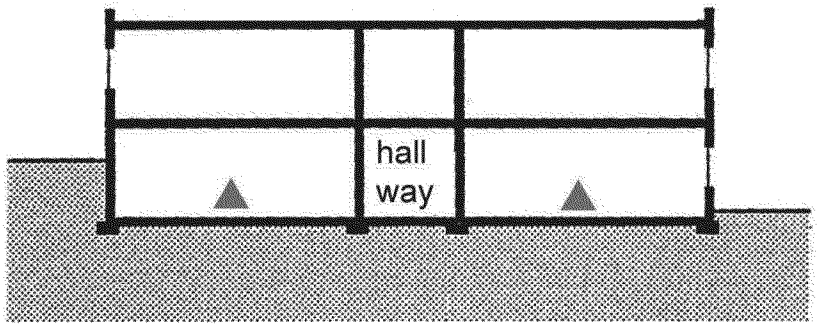

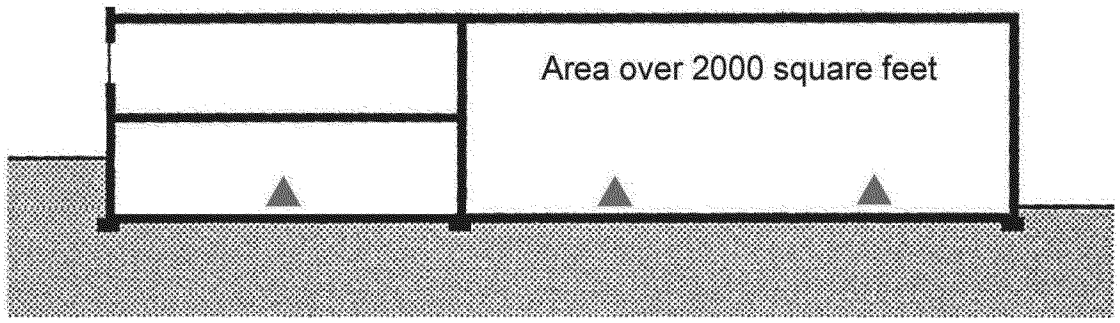

Limited License, CRCPD National Radon Training Meeting, September 28, 2014, Not for Reprint or Resale.

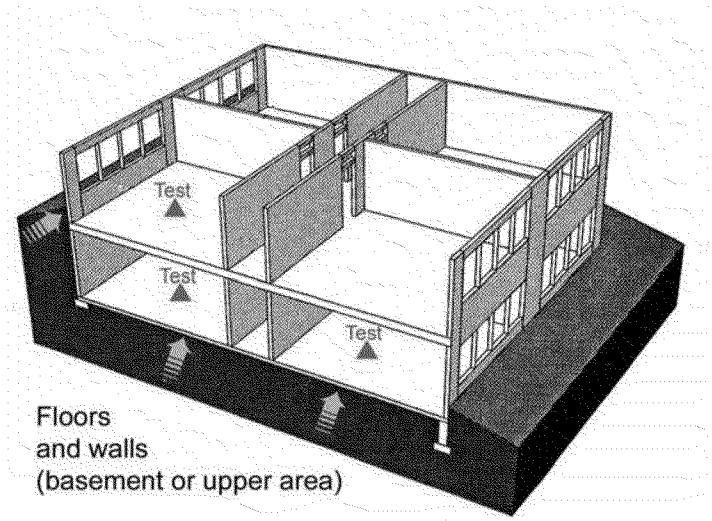

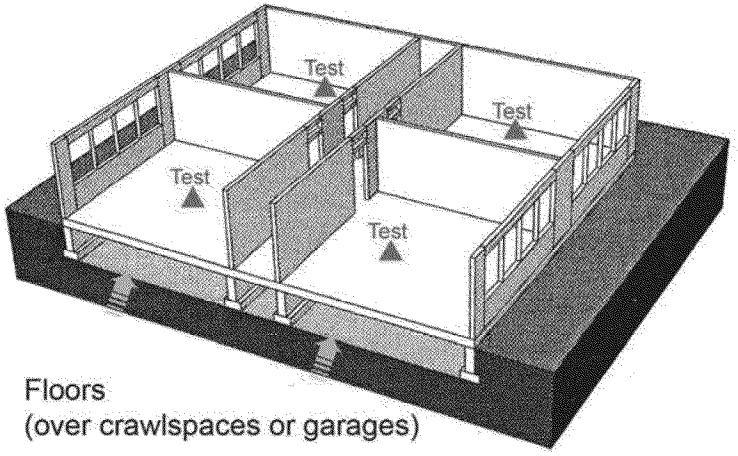

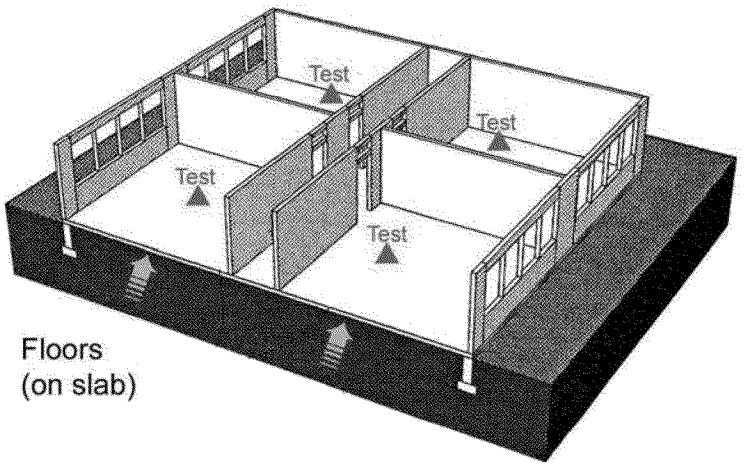

Limited License, CRCPD National Radon Training Meeting, September 28, 2014, Not for Reprint or Resale.

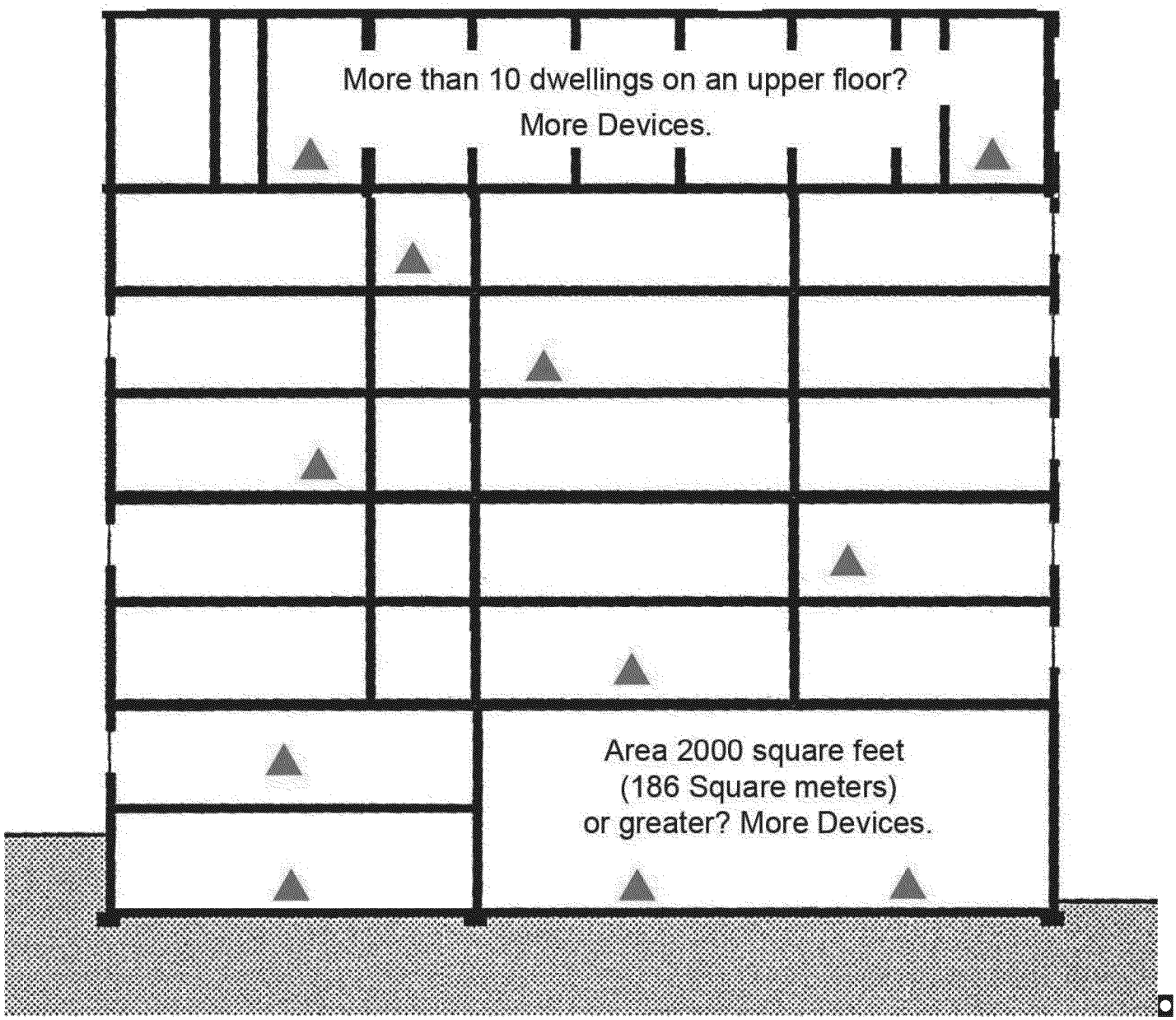

Limited License, CRCPD National Radon Training Meeting, September 28, 2014, Not for Reprint or Resale.

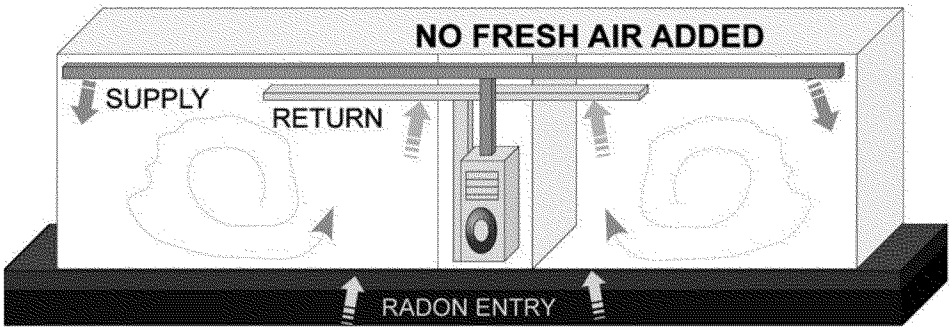

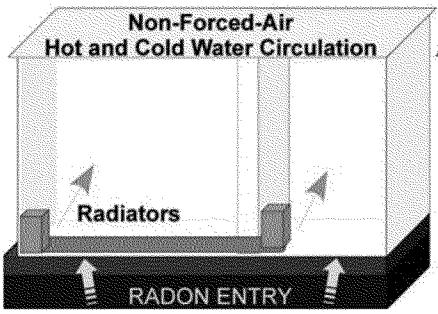

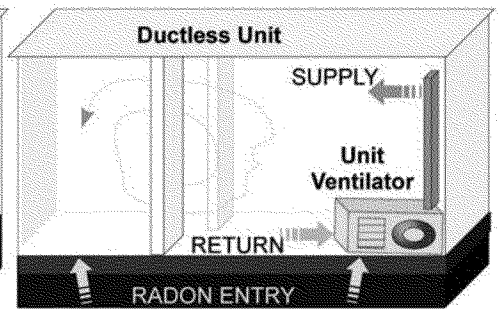

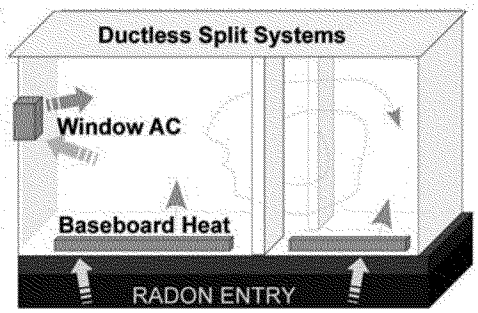

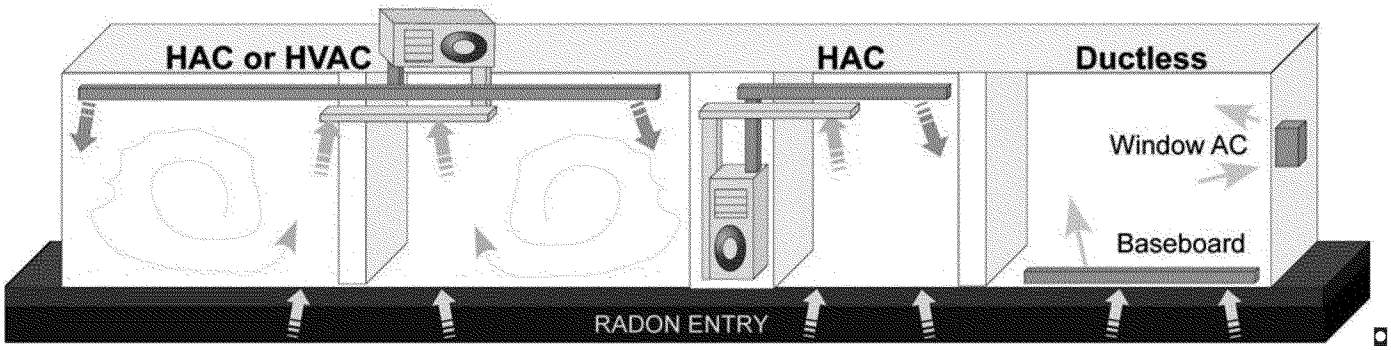

Limited License, CRCPD National Radon Training Meeting, September 28, 2014, Not for Reprint or Resale.

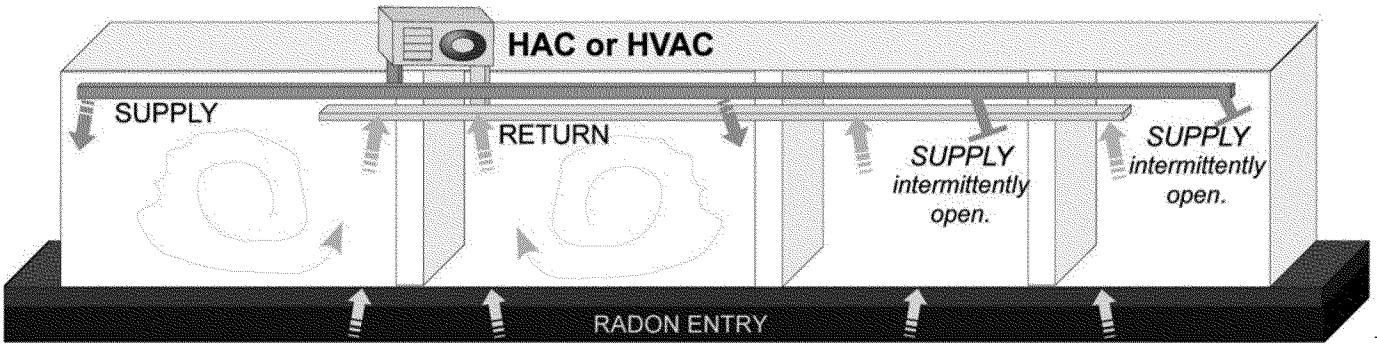

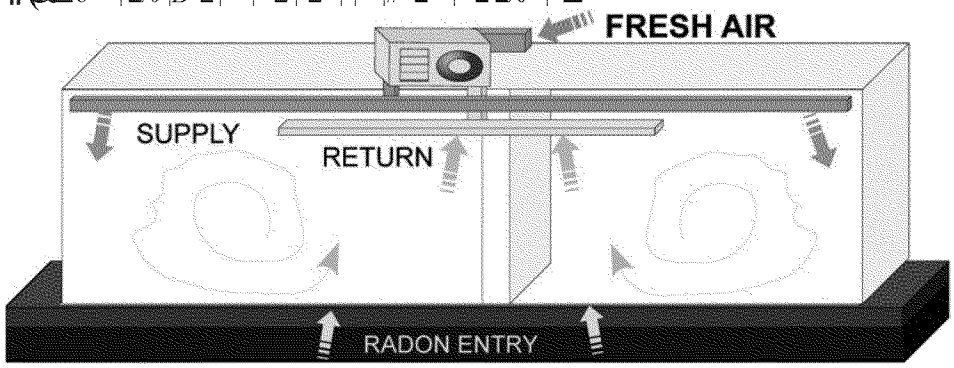

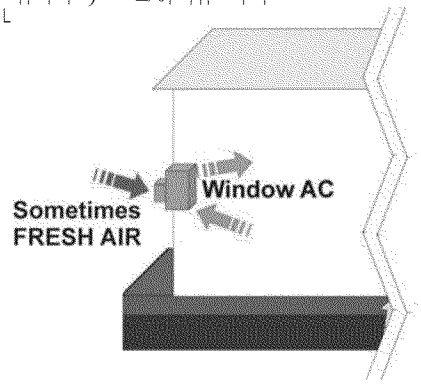

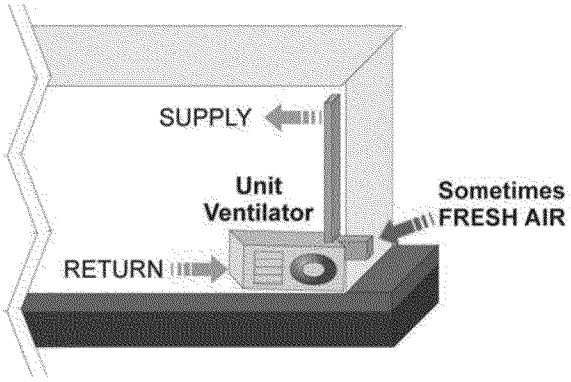

Limited License, CRCPD National Radon Training Meeting, September 28, 2014, Not for Reprint or Resale.

[illegible]

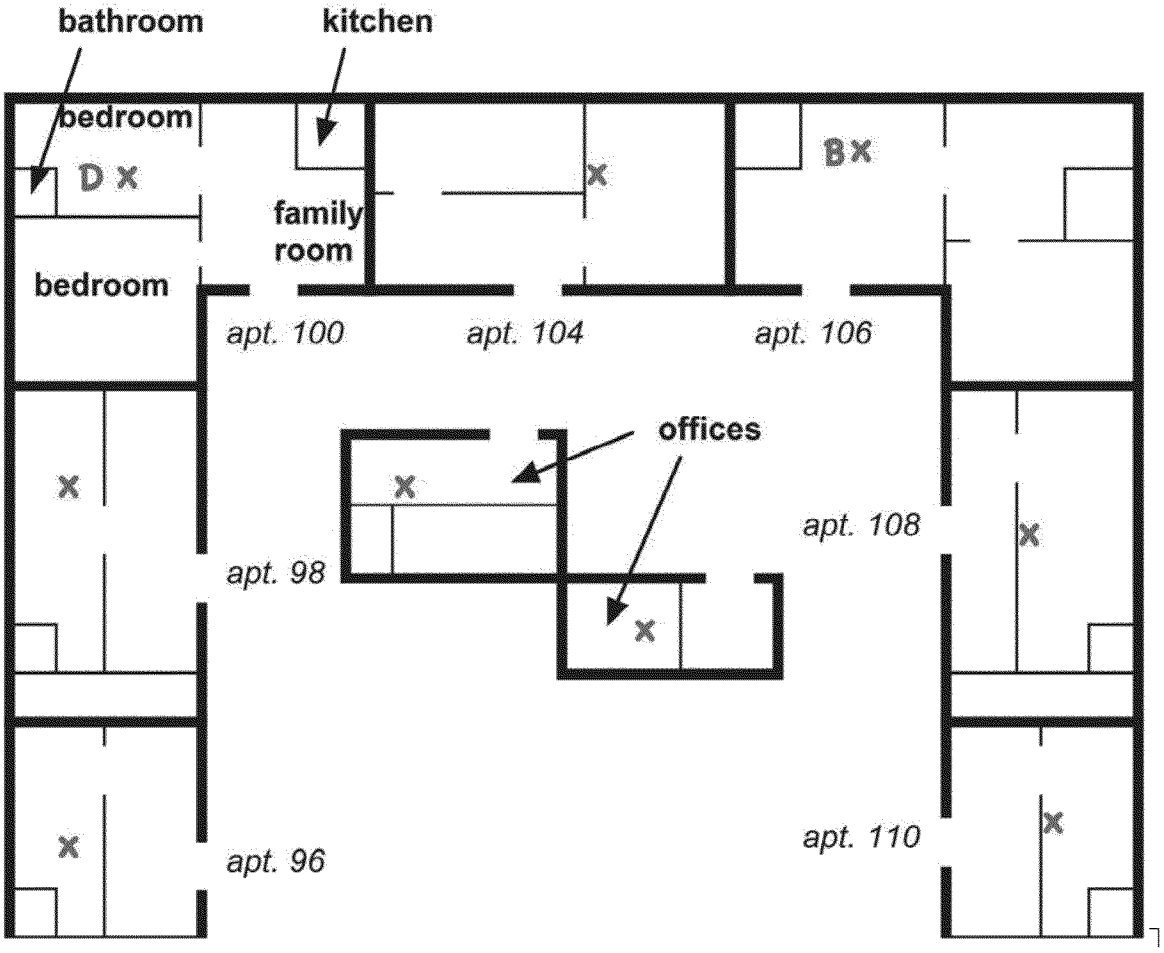

Limited License, CRCPD National Radon Training Meeting, September 28, 2014, Not for Reprint or Resale.

Management or Radon Company

Anytown, USA 800-000-0000

Limited License, CRCPD National Radon Training Meeting, September 28, 2014, Not for Reprint or Resale.

Management or Radon Company
Anytown, USA 800-000-0000

023:>	0;;			2S>S2;;?	00&;;	2S<S2;;?	00&3;	0		SH	SH
023:=	0;;			2S>S2;;?	00&;2	2S<S2;;?	00&3;	0		SH	SH
023:@	0;:			2S>S2;;?	00&;?	2S<S2;;?	00&3>	0		SH	SH
023:?	0;=			2S>S2;;?	00&0:	2S<S2;;?	00&3@	0	D	SH	SH
023:<	0;=			2S>S2;;?	00&0>	2S<S2;;?	00&3@	0		SH	SH
023>;	0;?			2S>S2;;?	00&22	2S<S2;;?	00&:;	0	K	SH	SH
023>0	00;			2S>S2;;?	00&2>	2S<S2;;?	00&:2	0		SH	SH
023>2	002			2S>S2;;?	00&3;	2S<S2;;?	00&:>	0	B	SH	SH
023>3	00:			2S>S2;;?	00&33	2S<S2;;?	00&>;	0		GJ	SH
023>:	00=			2S>S2;;?	00&3<	2S<S2;;?	00&>3	0		GJ	SH
023>>	00?			2S>S2;;?	00&:2	2S<S2;;?	00&>=	0	D	GJ	SH
023>=	02;			2S>S2;;?	00&:>	2S<S2;;?	02&;;	0	# K F	GJ	SH
023>@	2;2			2S>S2;;?	00&>>	2S<S2;;?	02&;?	2		GJ	SH
023>?	202			2S>S2;;?	02&;;	2S<S2;;?	02&00	2		GJ	SH
023><	3;=			2S>S2;;?	02&;:	2S<S2;;?	02&0>	3		GJ	SH
023=;	30?			2S>S2;;?	02&;?	2S<S2;;?	02&0?	3		GJ	SH
023=0	30?			2S>S2;;?	02&0;	2S<S2;;?	02&0?	3		GJ	SH

Central Daylight

George Jackson GJ G100225

Sam Hayes SH G107809

Limited License, CRCPD National Radon Training Meeting, September 28, 2014, Not for Reprint or Resale.

Management or Radon Company
Anytown, USA 800-000-0000

Limited License, CRCPD National Radon Training Meeting, September 28, 2014, Not for Reprint or Resale.

[illegible]

Management or Radon Company
Anytown, USA 800-000-0000

[illegible]

Limited License, CRCPD National Radon Training Meeting, September 28, 2014, Not for Reprint or Resale.

Management or Radon Company
Anytown, USA 800-000-0000

Limited License, CRCPD National Radon Training Meeting, September 28, 2014, Not for Reprint or Resale.

Management or Radon Company

Anytown, USA 800-000-0000

Limited License, CRCPD National Radon Training Meeting, September 28, 2014, Not for Reprint or Resale.

Management or Radon Company

Anytown, USA 800-000-0000

Limited License, CRCPD National Radon Training Meeting, September 28, 2014, Not for Reprint or Resale.

Limited License, CRCPD National Radon Training Meeting, September 28, 2014, Not for Reprint or Resale.

AARST CONSORTIUM ON NATIONAL RADON STANDARDS
www.radonstandards.us
standards@aarst.org

WWW.AARST.ORG

Copyright © 2010 AARST, P.O.Box 2109, Fletcher, NC 28732