David Hassel
60 Edwards Rd
Wynantskill, NY 12198 dhassel@ nycap.rr.com

9/8/16

Testimony at joint hearings on water quality held 9/7/16 in hearing room B

I have transcribed and cleaned up my handwritten notes and added in some of my verbal testimony and a few facts to clarify things:

Hi, my name is David Hassel and I have many professional and personal connections to Hoosick Falls (HF). I only recently met Michael Hickey last January, but his dad's job was to run the Teflon (PTFE) coating towers I designed and built for the McCaffrey St. factory around 1977. I still have a tower worksheet with his dad's initials on it for an 8 hour run (he supervised pass #2 of 6 passes) for a 1000 yard roll of fabric that took 3 days to make in 1983.

I only recently met Dr. Martinez, but his father put stiches in my forehead after I bumped it at McCaffrey St. in the 1980's

In the late 70's and early 80's I designed and built three PTFE glass fabric coating towers at the McCaffrey St. Plant and 1 fiberglass thread and yarn coating tower for the John St. plant. It was in these locations that 95% of the many tons of PFOA used in Hoosick Falls was used, starting in 1955 and said by Saint-Gobain, the current owner of McCaffrey St., to end around 2014. I was later appointed chief engineer of the R&D department of Oak Materials Group (OMG) , the owner of the McCaffrey St. Plant from about 1967 to 1988. I worked there with my office on the third floor right next to the tower stacks for about 8 years. My prostate cancer at a young age was probably due to breathing PFOA vapor for 8 years. After leaving OMG I spent the next 15 years inventing, patenting, manufacturing and selling scientific instruments used to track air pollution and study chemical reactions. I helped create 150 new jobs in Albany County doing this.

Recently, I have been working with the EPA and Vt. DEC scientists and engineers to help them find all the PFOA . One of the HF class action lawsuit groups of lawyers paid me generously to hold a seminar for them on what PFOA is and how it got into the environment and people. Once I had it all together I presented shorter versions to RPI and Union College students as well for free. I have also worked extensively with Ken Facin, the school superintendent for Hoosick Falls schools to help him and his students learn more about and cope with the technical issues of this crisis.

I would like to address 2 important technical issues today in some depth, and a few others lightly. My comments will provide more in depth information or comments on answers to some questions the Committee has asked others today.

I congratulate Dr. Zucker and Dr. Seggos on their ongoing vigorous efforts, but am critical of some of the facts they are presenting about the science around PFOA and suggestions they are making as to how we might move forward. In some cases they are assuming that PFOA and PTFE are like other contaminant chemicals they have dealt with in the past. Some of these assumptions will lead to wasted money and effort. The one thing I learned the hard way very early about PFOA and PTFE is that they are

both very peculiar chemicals and will do things that no other organic or inorganic chemicals would normally do to each other, to the environment, or to people.

The first item is to note is that in our local factories, unlike DuPont, where PTFE was made but not sintered, 99+% of PFOA used here was airborne when leaving our factories. Dumping waste PFOA was not part of the regular manufacturing process of making PTFE coated glass fabric. Sintering is the last step of the four step process used to make PTFE coated glass cloth, and because the sintering temperature is so much higher than the boiling temperature of the PFOA, all the PFOA went up the stacks and none stayed on or in the PTFE or the fabric. Step one is to dip the fabric in a water based dispersion that contains PTFE powder, Triton X-100 and PFOA, the latter two are both dispersants used to keep the powder suspended in the water. The second step is to just pull the dipped fabric between a couple of metering bars to even out the coating and then into the lower section of the tower oven. Here all the water is dried off. The third step is to apply higher temperatures as the fabric travels upwards and bake off all the dispersants, and the fourth step is to fuse (sinter) the now water free and dispersant free Pure PTFE powder onto the glass fabric. The fabric is then wound up, carried back to the unwind stand, and more coats are added until has enough PTFE for the particular use it going to be put to. Typically 4 to 7 passes were needed. Baking off organic materials and sending them up a stack usually results in those materials diluting into the air and going wherever the wind takes them, possibly hundreds of miles away. But unlike almost any other airborne contaminant, PFOA is so highly hygroscopic that it gathers up water, forms droplets, and 95% of it will always fall to the ground no further than 2 miles from the stack. In Little Hocking, Ohio, a small town that was upstream on the other side of the Ohio River from DuPont and had no PFOA dumps near their municipal wells and no contaminated water from the river available to the wells, 100% of the PFOA in their water was proved to come from airborne PFOA that blew the one mile from the stacks to the well field, fell to the ground, took many years to travel through the soil to the water table, and then contaminated the drinking water to the highest level found in the 6 polluted water districts around the DuPont Plant. Some PFOA was found further than 2 miles from the DuPont plant, but it was mostly in the direction of the prevailing wind and also could be found in significant quantity that far away only because although we used a lot, many tons, they used over 10,000 tons of PFOA to make PTFE and FEP, and more than 5000 tons of that was sent out tall stacks and up into the air. The C8 studies were not just health studies, they also included transport studies for PFOA, and they tracked every last pound of it used at DuPont from 1950 to 2003.

I am consulting with the VT DEC geologists and they are constructing an air to ground to water model program to track where the PFOA went around the N. Bennington Chem Fab plant, and are using methods and data from the C8 transport study papers to support that work. Looking for all the local landfills and dumps is not the way to find the bulk of the PFOA used, and the nature of the distribution will make pumping water from under a plant or landfill to try and remove a significant portion of the total PFOA in the local environment a fool's errand. You will find some very small amounts of PFOA in landfills and illegal dumps. A spoiled barrel of dispersion, coagulated by freezing or too much agitation while being trucked in, would have to be discarded and one or two barrels would account for all the PFOA they are finding in the local dumps. The discarding of a barrel of dispersion would be very rare.

The stuff was so expensive that the person who was responsible for the spoilage would probably be fired, and many precautions were taken to handle the stuff properly, knowing that it was expensive and vulnerable to mishandling. Regular production of PTFE coated fabric, foil, thread or yarn all resulted in 100% of the PFOA being sent up the stack as the first step in the process. By comparison, the DuPont method of making PTFE dry powder and removing g all the PFOA before shipping it resulted in at least 50% of the PFOA ending up in wastewater with several other chemicals that had to be dumped somewhere. But even a spoiled 55 gallon barrel would contain at most a half pound of PFOA. Many tons went out the stacks and unless it has made its way to a well or a river through the groundwater, it will all still be there in the ground spread somewhat evenly over 4 to 12 square miles of ground. Each year it travels a few inches deeper, carried by rainwater and snowmelt. In low spots it might travel down much faster, on hilltops slower, so that if the water table is several feet deep, it can take anywhere from a few years to several decades to show up in wells. This scenario has been documented to happen in Minnesota. So once you have found PFOA in a region, water testing even for wells that initially test clean must continue for decades to be sure that the PFOA was not just moving slowly downward and had not reached the water table yet. The only alternative is deep soil testing all the way down to the water table, and this should be done for any new municipal wells in a region with PFOA .

One health issue I would like to address in depth is the C8 Science panel conclusions about Kidney cancer. In particular the necessary statistical significance of the cancer incidence data obtained and why small cohort studies will always fail to give any meaningful result and are thus a waste of time and money. When asked about any past research his group has done, Dr Zucker keeps making reference to his "future study of PFOA and health effects in HF" and ignoring the results of the C8 Science panel. This is a big mistake.

The first fact needed is the level of PFOA in blood for exposed people: Anyone doing the 5 minute Google on the C8 panel studies would quickly find in several places that if a group of people drink water with 600 ppt of PFOA, they will test at an average between 60 and 90 ppb of PFOA in their blood. There is a lot of individual scatter, but once you get to a couple hundred in a group, the averages always come out the same. The 60-90 variation will be mostly due to age and sex. I predicted this level and used it to try and help plan for the future well before the first blood test was taken in HF. Many months later, when the first blood test results were finally released, the number 20 came out as the " geometric mean" and was widely distributed through online postings and press releases. As was shown several months later when the hard to find and interpret real data tables were finally released, about half the people in that first group had not drank any municipal water or high PFOA level well water, and so had no PFOA at all in their blood. For the ones of interest, the ones who drank municipal water, the average was 60 to 90 ppb. There was the usual wide scatter, with some at several hundred ppt, but this is to be expected. No press releases this time.

If his staff had paid any attention to the meaning of the word statistics in high school, they would know that in order to ever come to a conclusion about the effects of PFOA on the people in Hoosick Falls, they would need a minimum of 6250 person – years of full medical history for those with high exposure to PFOA. 16 of every 100,000 people in any group uncontaminated by PFOA will have incidence of Kidney cancer in any given year. That means that you need 100,000/16 = 6250 person

years of medical history to find even one background case of cancer. Without a statistically valid background case, and at least one "extra' case, there is no way to claim an increase in incidence. And without a big enough cohort of highly exposed people to have predicted two cases and only found one documented case, you cannot even begin to come to any conclusion about PFOA **not** causing Kidney cancer. The C8 studies had a big enough cohort that they were looking at 94 case of Kidney cancer incidence over a 9 year survey. The mathematics of any of these studies is constrained by the reality of people. "Fractional" cases are not detectable. Whole numbers are necessary when dealing with people. Since they only did blood tests in HF for about 2000 people and only half had any significant amount of PFOA, this leaves a cohort of 1000 people to study. One could argue that if you do subscribe to the C8 study conclusions, you would find 2 cases of Kidney cancer if you studied the entire medical history of these 1000 people for 6 years. This sounds like it might work until you realize that the basis of the C8 study conclusions was that only the people with high levels of PFOA in their blood have 2x higher incidence than the ones with low levels or none, so only maybe 200 or 300 of our group would be predicted to get the extra Kidney cancer, and that would require 25 years of medical history for all of them to find even the minimum of two cases in a statistically valid manner. More than about 8 years of medical data is known t be too hard to find for a fixed cohort, since ones who should have been included but died will be missing from the group and thus skew the number of detected cases. Looking at these numbers it is obvious there is no way that the NYS DOH "research" can come to any conclusions about the incidence of Kidney cancer, which is the most strongly predicted disease caused by PFOA. The other 5 diseases would require an even larger cohort of highly exposed people to come to any conclusions. If all the medical data from all the highly exposed people in Hoosick Falls, Petersburg, N. Bennington VT, and Merrimac NH were combined into one study, there would be a slight chance of getting a statistically valid conclusion. But asking 3 states in two different EPA regions to cooperate like that would be a fool's errand. They would never coordinate and cooperate. The lack of a sufficient number of people in each group showing a high level of PFOA in their blood will invalidate all of the three separate state studies. They are all going to be a big waste of money. Much like the small cohort worker studies cited by the EPA in the literature study paper by Chang, the " research" Zucker claims he will do has no possibility of coming to any conclusion. And some of his staff might even know this and encourage the work since they can use it to yet again say " this is a new chemical and we don't know anything about it, and the research done has drawn no conclusions" and they might try to imply that "no conclusion" means no cancer cause. It does not.

Interestingly, this discussion of statistical validity makes it obvious that the C8 study conclusions are strongly supported and statistically valid. Their conclusions were based on 9 years of medical history for 40,000 people, all of whom had PFOA blood tests and 94 of whom had fully documented cases of Kidney cancer. Just looking at 40,000 people for 9 years, one would expect to find only 58 cases of Kidney cancer if there was no PFOA involved. Of those 94 documented cases, 59 were considered to be possible "extra" cases because they were exposed to high, medium or low amounts of PFOA in their blood. The 28 ones with 4 to 30 ppb had only a 20% increase in incidence of Kidney cancer. The 31 ones with 31 to 655 ppb all had a 100% increase.

This completely disproves that the max 400 ppt in water advisory had a large margin of protection, as Dr Zucker keeps saying. He **might** have been able to defend that statement in 2009 or 2010 by lack of proof. However, by 2012, it was proven by at least 4 independent studies that 400ppt in water gives 40 ppb in blood. That's way too high to be safe from dramatic cancer incidence increase , and these two facts were well proven and well documented and widely available information to anyone who did even a bare minimum of research on PFOA as early as 2012.

We have a lot of people whose blood tested between 31 and 655 ppb of PFOA: **They need to get medical monitoring, and it should start immediately.**

I also talked a bit about a possible lead to a method for tracking in the environment a group of toxic fluorinated chemicals that are known to be produced by the high temperatures used to fuse the PTFE onto fabric, but for which we never had any documented methods to track. I did not read that from my notes, it was mostly just from memory. I can provide both summaries and references to peer reviewed papers about the actual chemicals which come from thermally decomposed PTFE. Those references are quite thorough and old. Just ask or look in the attached Bibliography under "TOXICITY OF OVERHEATED PTFE" The tracking method is evolving, and for now it is an enticing possibility, but no more than that.

Feel free to E-mail requests for answers to specific technical questions. I will respond promptly since I want to help get rid of this stuff and you need prompt answers. I see you in a good position to do your job better and make sure the DOH and DEC have all the resources and policies to do their jobs better as well if you all have a full understanding of what we are dealing with. Please don't ask any who knew what when questions, there are plenty of other people who know far more about that than me.

Attachments:

Bibliography: This is a very large collection of online reference material about all aspects of PFOA. Mostly Scientific papers and journalism. It is divided into categories and each reference is accompanied by a brief description or at least a few keywords to aid in a search. It is in MS Word format and easily searchable in that format. It can be converted into a PDF if you are more comfortable with them. I have a friend who does that and might be able to provide a PDF copy if you can't do it yourself. It should now be easy to convert since I reformatted parts of it to make it easier for him to do his conversions.

Figures; 1) A timeline diagram of the history of all our local factories and many others built by the three companies that were all founded by three guys who worked together in Pownal VT in 1953 at Warren Wire making the first PTFE coated wire and the first PTFE coated glass fabric.

2) A generic diagram of the towers used to make PTFE coated glass cloth.

3) A worksheet from production of one 1000 yard roll of PTFE coated glass fabric. It took 6 passes through the tower over a period of 2 days running 3 shifts a day to make this one roll. Useful information includes the pounds of dispersion used per shift (.15% of which would be PFOA), the temperatures of the infrared heaters and the speed of the fabric, (which can be used to determine how much thermally decomposed PTFE was released) , and what % PTFE was in the dispersion used on a particular pass (0, 45 or 54).

1938 PTFE invented "Teflon" USA "Hostaflon" Germany

1942 Lester Russel, Electrical Engineer working at Owens Corning Fiberglass in Newark OH, makes first PTFE coated fabric to use as wrapped wire insulation, hired by Dupont to continue

1946 Cleveland Dodge, a GE test engineer working on a rocket project needs PTFE coated wire, and in

1947 approaches John Ransom Cook, who has just founded Warren Wire in Pownal, Vt to try and make PTFE coated wire.

This is also the year PFOA was invented (by Dupont?) and started to be made by 3M

1951 Cle Dodge leaves GE to become VP at Warren Wire
Dupont patents use of PFOA to mfg PTFE, builds huge plant & starts mass producing

1953 Lester Russel, who has left OCF to perfect coating glass fabric with PTFE at DuPont, quits DuPont and joins Warren Wire as Research Director

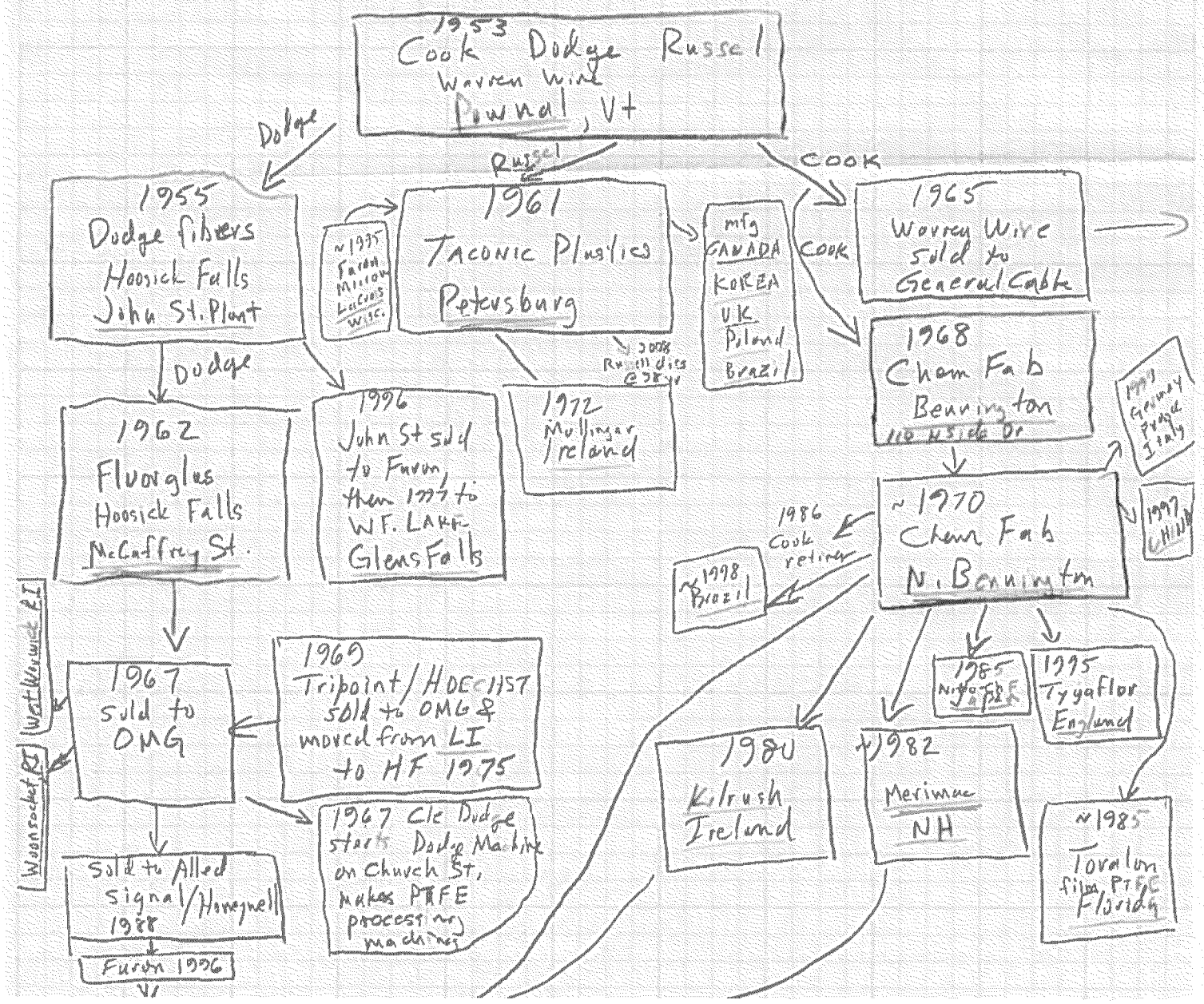

CROSS SECTION OF FABRIC/YARN TOWER

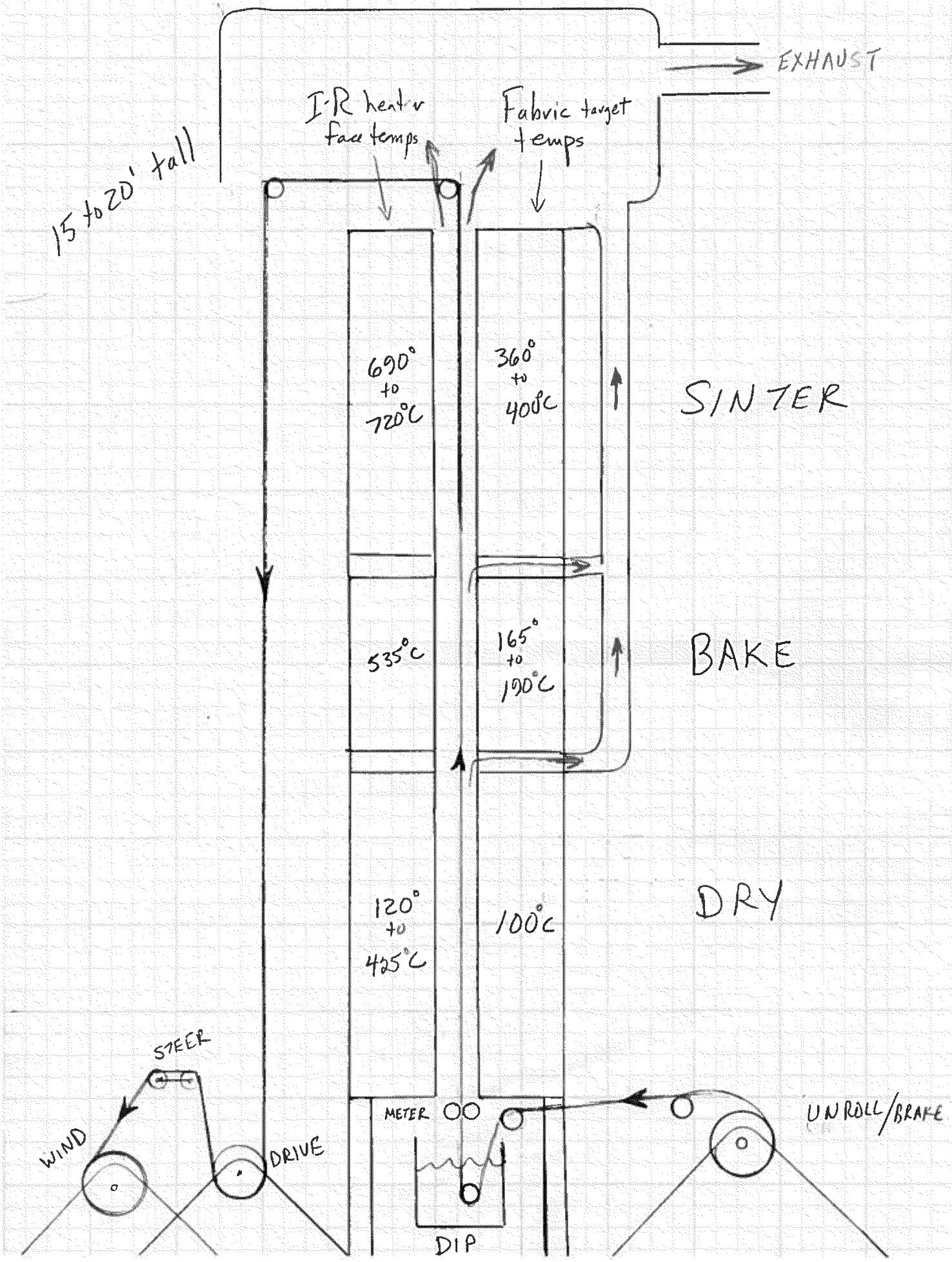

OAK Materials Group Inc. | Fluorglas Division

Hoosick Falls, New York 12090 Telephone 518-686-7301

Run No. 7-951 Type: 381-6 Case No.: 876677

Base Fabric Type: 116-38 Supplier: Burlington

Thickness: .0032-.0033 Width: 38 3/4 Starting Length: 1000

Date/Hour Started: 9-8-83 - 4:00 AM Date/Hour Stopped: 9-10-83 1010 AM

Date/Hour Started: Date/Hour Stopped:

Date/Hour Started: Date/Hour Stopped:

Date/Hour Started: Date/Hour Stopped:

		AD-1 1	DRY PASS	2	3	AD-1 4	5	AD-1 6	
Operator's Initial		[illegible]	[illegible]	BW	BW		BW	[illegible]	
Starting Time		4:45A	1250PM	825PM	4:05AM	[illegible]	8:25PM	2:50A	
Stopping Time		[illegible]	740PM	320AM	[illegible]	640PM	2:05A	940AM	
Solution No.		45%	[illegible]	46%	54.5%	54.5%	54.6%	54.5%	
Sp. Gr. on each pass		1340	[illegible]	1340	1450	1450	1460	1450	
Temp. of Dispersion		79	[illegible]	78°	79°	78°	76°	78	
Oven Temperature	#1	800	[illegible]	800	350	350	350	350	
	#2	700	[illegible]	700	250	250	250	250	
	#3	700	[illegible]	700	350	350	350	350	
	#4	800	[illegible]	800	500	500	500	500	
	#5	1000	[illegible]	1000	1000	1000	1000	1000	
	#6	1000	[illegible]	1000	1000	1000	1000	1000	
	#7	1060	1330	1330	1330	1330	1330	1330	
	#8	960	[illegible]	1280	1280	1280	1280	1280	
	#9	1060	1330	1330	1330	1330	1330	1330	
	#10	240	140	240	140	140	140	140	
Dip of Spacer		.0055		.006	.006	.006	.006	.006	
Ft./Min.		7	[illegible]	7	7	7	7	7	
Lbs. Solution Used		167.00	[illegible]	115.00	150.00	107.00	94.00	133.00	
Finished Length		[illegible]	966	992	[illegible]	983	974		
Finished Width		37½	[illegible]	37.5	37.5	37.5	37.6	37½	
Damper Setting	#1	1	1	1	1	1"	1	1	
	#2	[illegible]	[illegible]	1½	1½	1½"	1½	1½	
	#3	[illegible]	[illegible]	½	½	½	½	½	
	#4	Closed	Closed	Closed	Closed	Closed	Closed	Closed	
		.270		.307	.377	.455	.503	.592	
		.861		.308	.407	.464	.514	.626	

REMARKS:

BIBLIOGRAPHY OF DAVID HASSEL'S PFOA RESEARCH

Ongoing updates, this copy made Sept 2016

Online references are grouped by topic, show web address and brief description. Some will have excerpts or summaries or comments on relevant info. The groupings are as follows:

OVERALL SUMMARY REPORTS ON PFC'S AND DRINKING WATER

HISTORY OF LOCAL FACTORIES

HISTORY AND ORIGIN OF PTFE & PFOA

MANUFACTURE AND CHEMISTRY OF PFOA

PFOA ISOMER INFORMATION

MANUFACTURE AND CHEMISTRY OF PTFE PRODUCTS

TOXICITY OF OVERHEATED PTFE

OTHER FLUORINATED CHEMICALS

MANUFACTURING USE &TRANSPORT OF PFOA TO ENVIRONMENT

LOCAL MANUFACTURING TRANSPORT OF PFOA TO ENVIRONMENT

DISCOVERY & REMEDIATIONOF PFOA CONTAMINATION, FARM&VEGETABLE ISSUES

CARBON FILTER USE & ISSUES

MEDICAL STUDIES OF PFOA

- C8 SCIENCE PANEL
- C8 MEDICAL PANEL
- IMMUNOTOXICITY OF PFOA
- OTHER GENERAL STUDIES, EPA, STATES, 3M ETC.

LOCAL MEDICAL DATA

LEGAL HISTORY OF PFOA

LEGISLATIVE & OTHER GVT. INVOLVEMENT

DENIAL OF TOXICITY OF PFOA

OTHER LOCATIONS IN US USING PFOA

OVERALL SUMMARY REPORTS ON PFC'S AND DRINKING WATER

http://dec.vermont.gov/sites/dec/files/co/pfoa/documents/l4Post.pdf Most comprehensive report found.

HISTORY OF LOCAL FACTORIES:

http://www.chrtape.com/composites-history.aspx St-G history of ownership of McCaffrey St. not all that complicated as depicted here

http://docplayer.net/4103394-High-performance-wire-cable-history.html High temp Wire & cable history, includes Warren Wire & his brother's company, Sequoia W&C. Furon, Dodge Fibers, and dozens of others using PTFE. History from 50's to 2004

https://books.google.com/books?id=bKfAQyDIdKMC&pg=PT57&lpg=PT57&dq=history+of+warren+wire+cook+pownal&source=bl&ots=Gni_BezBFZ&sig=6HOYgIq5r_b5DhOjxgpDCDgIPiM&hl=en&sa=X&ved=0ahUKEwjB_fu6sLLLAhUGoD4KHQrpBY0Q6AEILTAD#v=onepage&q=history%20of%20warren%20wire%20cook%20pownal&f=false Pictures of first Warren Wire plant & history of Cook & Dodge. Notes that Cle made wire starting in 1951, notes plants 2 & 3 in Pownal Ctr.

https://www.newspapers.com/newspage/63013663/ History of OMG in Bennington Banner. Possible pictures of John St plant if you subscribe

https://en.wikipedia.org/wiki/Cleveland_E._Dodge,_Jr. Cleveland Dodge's brief history & relatives

http://www.hoosickhistory.com/biographies/dodgebio.htm Picture & history of Cleveland E. Dodge Jr 1922 – 2007 and dodge industries

https://www.sec.gov/news/digest/1969/dig092969.pdf 1969 stock news about Tri-Point Industries, Inc., One Trilon Way, Commack, N.Y., owned by Hoechst

http://www.hoosickhistory.com/shortstories/timeline2000.htm John St was the first factory, started in 1955. Cleveland Dodge

http://articles.latimes.com/1985-10-23/business/fi-14031_1_oak-industries 1985 OMG sale to Allied-Signal ~60% of O I sold

http://articles.chicagotribune.com/1992-11-23/business/9204170239_1_pay-tv-proxy-fight-crystal-lake/2 1992 remnants of Oak Industries leave Crystal Lake, history of SEC trouble & pay TV debacle

http://www.fundinguniverse.com/company-histories/furon-company-history/ Furon 1955-1998 History up to just before buying HF plants.

http://www.legacy.com/obituaries/sfgate/obituary.aspx?pid=152418925 Fluorocarbon Co -> Furon founder obituary

http://articles.latimes.com/1989-06-08/business/fi-2078_1_fluorocarbon-peter-churm-ozone-layer 1989 Furon name change from Fluorocarbon Co. Claims to be all non-toxic and innocent

http://www.european-business.com/saint-gobain_performance_plastics_kontich_nv/portrait/ 1999 Furon-> St Gob: It operated with four employees under the name 'Fluorocarbon' and changed its name to 'Furon' in 1990. Nine years later, in 1999, Furon was taken over by Saint-Gobain.

http://www.tritecseal.com/about-us/company-history/ ~1963 Michigan sealcomp /furon /tritec In 1974 Steve formed Sealcomp, which he sold to Fluorocarbon Corporation in 1982, which became Furon

http://www.timesunion.com/news/slideshow/Timeline-if-Hoosick-Falls-water-danger-123723/item-38491.php HF timeline with pictures 2014-feb 2016 well done

Taconic Plastics: http://www.4taconic.com/page/industrial-products-division-28.html

136 Coonbrook Road, PO Box 69 Petersburgh, NY 12138 Tel: 518-658-3202

http://www.legacy.com/obituaries/bennington/obituary.aspx?pid=117321868 history of Taconic founder Lester T. Russell 1910 - 2008

http://www.fundinguniverse.com/company-histories/chemfab-corporation-history/ 1968-2000 Chem Fab in Bennington, N. Bennington, Merrimack. Run by John, Paul (bro) , & Warren (son) Cook. This company was bought out by St-Gobain, former location was 1030 Water St.in N. Bennington

W.F. LAKE CORP. http://www.wflake.com/cord/Experience-Counts.pdf , 65 Park Road, Glens Falls, NY 12804 Tel: (518) 798-9934 Two former Fluorglas OMG employees bought the John St. equipment used to coat fiber glass yarn and thread with PTFE and moved it to Glens Falls.

http://iaspub.epa.gov/triexplorer/tri_factsheet.factsheet?pstate=NY&pcounty=Rensselaer&pyear=2013

St. Gobain is biggest polluter of air in Rens Co.: 35000 lb/yr into air Taconic plastic is 2nd at 17000 lb into air & waste dumps. mostly hydrocarbons like toluene & xylene

https://www.saint-gobain.com/en/commitments/saint-gobains-csr-commitments/limit-our-environmental-impacts St-G environmental policies: no mention of PFOA or even USA

https://www.dropbox.com/s/vdwlahweslbc4rn/pfoa%20saint%20gobain%20notice%20letter%20to%20epa%20re%20tsca%209022526801be78d_8ehq-14-19758_section%208%20(e)_n_363196.pdf?dl=0 St- Gobain water tests done 10/3/14, sent to EPA letter 12/20/2014 some show 10ppt Perfluoroheptanoic acid PFHpA along with up to 540 ppt PFOA

http://www.villageofhoosickfalls.com/Water/Documents/NYSDOH-WellTestResults-02292016.pdf results showing >1000ppt in muni water, >3000 in private well

https://mgtvwten.files.wordpress.com/2016/03/initial-pfoa-results-in-rensselaer-county.pdf Petersburgh>100 ppt

http://www.villageofhoosickfalls.com/Water/Documents/DOH-PrivateWells-Redacted-011916.PDF bus garage 412 ppt

HISTORY AND ORIGIN OF PTFE & PFOA

http://www.pianoworld.com/forum/ubbthreads.php/topics/1444393/Maker%20of%20Steinway%20teflon%20bushi.html "In 1938, Dr. Jefferson of DUPONT, and Prof. Winacker of HOESCHT, as young bench chemists, simultaneously invented a polymer in their research labs, one in the U.S., the other in Germany. That polymer, or plastic resin, is polytetraflourothylene (PTFE)." Details about Tri-Point, later bought by OMG

http://defendingscience.org/case-studies/perfluorooctanoic-acid 2013 Paper starting with history of PFOA

https://www.google.com/patents/US2559752 1951 DuPont patents use of PFOA to make PTFE, Describes mfg. process in detail. Later citations listed at end are revealing as well

https://www.google.com/patents/US3037953 1961 patent mentions use of .15% PFOA in dispersion as currently the Standard practice in the industry

https://www.google.com/patents/US3037953 1961 use of .2-.4% pfoa in dispersions for coating and its superior working properties making crack-free films patented by DuPont

https://books.google.com/books?id=_0t9AwAAQBAJ&pg=PA137&lpg=PA137&dq=ammonium+polyfluorocarboxylate,&source=bl&ots=-wdfJarEu0&sig=jdhGhr8gSdCYHrruvA1lBpWyO7E&hl=en&sa=X&ved=0ahUKEwizy-CIlu7JAhXJ5CYKHRt_BeMQ6AEIJzAD#v=onepage&q=ammonium%20polyfluorocarboxylate%2C&f=false

$200 book on Fluoroplastics, excerpts available here. Details amount of PFOA used and various methods used to coagulate and/or concentrate the PTFE dispersion

https://www.diva-portal.org/smash/get/diva2:200514/FULLTEXT01.pdf History of PFOA & others, with emphasis on modeling their worldwide distribution into environment

https://renchemista.wordpress.com/ source for Bilott story without pictures. excerpt: 1/10/16: Bilott is currently prosecuting Wolf v. DuPont, the second of the personal-injury cases filed by the members of his class. The plaintiff, John M. Wolf of Parkersburg, claims that PFOA in his drinking water caused him to develop ulcerative colitis. That trial begins in March. When it concludes, there will be 3,533 cases left to try.

http://www.logwell.com/tech/shdwe/teflon_wire.html description of types of Teflon insulated wire

http://www.epa.gov/assessing-and-managing-chemicals-under-tsca/20102015-pfoa-stewardship-program EPA PFOA phase-out program 2015 report

http://www.qmed.com/mpmn/article/how-prevent-guidewire-coatings-flaking 2014 article on how medical coatings were degraded by loss of PFOA and many recalls and supplier changes resulted.

https://books.google.com/books?id=o5DmBQAAQBAJ&pg=PA23&dq=pfoa&hl=en&sa=X&ved=0ahUKEwid0fXUs_jKAhXBNT4KHWgTAF4Q6AEILDAB#v=onepage&q=pfoa&f=false $280 2015 book page 23-27 PFOA toxicity/EPA action/ PFOA substitutes & phase-out /Fluorotelomers

http://www.oecd.org/env/ehs/risk-management/47643223.pdf 2011 webinar on PFOA alternatives: 150 proposed, most are C4 or C6 based

http://highline.huffingtonpost.com/articles/en/welcome-to-beautiful-parkersburg/ MARIAH BLAKE's 2015 history of PFOA, some technical mistakes, otherwise very good

MANUFACTURE AND CHEMISTRY OF PFOA

http://www.google.com/patents/US2713593

http://www.google.com/patents/US8598267

3M Patents for : Fluorocarbon acids and derivatives &Fluoropolymer dispersion containing no or little low molecular weight fluorinated surfactant Original PFOA & related chemicals and later patent for replacement by heavy Fluorocarbons

https://en.wikipedia.org/wiki/Perfluorooctanoic_acid basic properties, very thorough

https://www.researchgate.net/publication/7340837_Sources_Fate_and_Transport_of_Perfluorocarboxylates Worldwide History of mfg & use of PFOA. Note that dispersion processing used more than all consumer & industrial products, and that PTFE manufacture used 10x as much as dispersion processing. Total production was 8000 tons. ~6000 APFO ~2000 APFN

Industrial and Consumer Uses of C8 & C9: (tons)
fluoropolymer manufacture (APFO) 1951-2004 2000-4000
fluoropolymer dispersion processing (APFO) 1951-2004 200-300
fluoropolymer manufacture (APFN) 1975-2004 400-1400
fluoropolymer processing (APFN) 1975-2004 10-20
aqueous fire fighting foams (AFFF) 1965-1974 50-100
consumer and industrial products 1960-2000 40-200
"Recently, the fluoropolymer manufacturers have completed a study to determine the disposition of APFO during dispersion processing and found that on-average 62% was thermally destroyed and 38% was emitted to the environment (34)" I could not find a copy of this study online. I found references to it in EPA documents, but no copy.

http://www.materiatech-carma.net/reach/substances_preoccupantes/Juin%202013_Doc_Ammonium%20pentadecafluorooctanoate%20(APFO).pdf 2013 European characterization/history & evaluation of PFOA : "Toxicity: There is evidence based on the RAC opinion on APFO that the substance meets the criteria for classification as toxic for reproduction in accordance with Article 57 (c) of REACH and as specific target organ toxic after repeated dose " "In conclusion APFO meets the criteria for a PBT substance" "PBT means persistent, bioaccumulative and toxic" very extensive research on environment and many different types of animals.

http://www.efsa.europa.eu/sites/default/files/scientific_output/files/main_documents/653.pdf

2008 'Perfluorooctane sulfonate (PFOS), perfluorooctanoic acid (PFOA) and their salts Scientific Opinion of the Panel on Contaminants in the Food chain' by © European Food Safety Authority, 2008

131 pages: Similar to European study above but with more emphasis on detection methods and pathways of exposure, manufacturing methods and history

http://www.oecd.org/officialdocuments/publicdisplaydocumentpdf/?cote=ENV/JM/MONO(2015)39&docLanguage=En international summary of regulations and Risk Reduction Approaches

https://books.google.com/books?id=FxQKCfT-GlkC&printsec=frontcover&source=gbs_ge_summary_r&cad=0#v=onepage&q&f=false

Pages 21—22 trace the removal of PFOA from coating dispersions and substitutes . In 2008 Dyneon introduced Dyneon ADONA . (ammonium 4,8-dioxa-3H-perfluorononanoate, made by 3M) In 2009, they were pfoa free in making PTFE

and in their dispersions. The book goes on with a very detailed description of the process of making PTFE and what chemicals and equipment are used.

http://www.fluoropolymers.org/news/APFOsafehandlingguide.pdf 2001 publication

relevant quotes: APFO is a sublimable solid that is typically supplied to the resin manufacturer in a concentrated aqueous solution. It is then used in a dilute form as a polymerization emulsifier. Once the polymerization is complete, the APFO is normally removed during finishing processes that result in dry forms of fluoropolymer products. Trace amounts of APFO may be present in finished fluoropolymer resins. Since these finishing steps are not applied to aqueous dispersions, the APFO added during polymerization is usually present in dispersion products as sold.

Ingredient: Approximate Weight (% wt) Fluoropolymer 20 - 60 Water 30-70 Non-ionic Surfactant < 6 Fluoropolymer Polymerization Aid < 1

http://echa.europa.eu/documents/10162/1b26b219-6783-4981-9acf-154d620937b4

Pg 7: The ammonium salt (APFO), which is often used in animal experiments, is very soluble in water. In aqueous solution it is present as anion PFO and the ammonium cation. The dissolved anion PFO will stay in equilibrium with the corresponding acid in aqueous media. **With currently available analytical methods it is not possible to distinguish between PFO and PFOA in samples**. In the literature reporting human and environmental monitoring studies the concentrations are referred to as PFOA or APFO

http://echa.europa.eu/documents/10162/13579/rac_apfo_annex1_adopted_en.pdf

PAGE 7:
Physical state at 20°C and 101.3 KPa APFO is a solid
Melting/freezing point APFO: 157-165 Deg C
(decomposition starts above 105 Deg C)

http://www.fluoropolymers.org/news/APFOsafehandlingguide.pdf descriptions & usage & nomenclature for PFOA/APFO

Pg 7: APFO is a sublimable solid that is typically supplied to the resin manufacturer in a concentrated aqueous solution. It is then used in a dilute form as a polymerization emulsifier. Once the polymerization is complete, the APFO is normally removed during finishing processes that result in dry forms of fluoropolymer products. Trace amounts of APFO may be present in finished fluoropolymer resins. Since these finishing steps are not applied to aqueous dispersions, the APFO added during polymerization is usually present in dispersion products as sold.

Pg 17: Ammonium Perfluorooctanoate (APFO): Ammonium perfluorooctanoate, or APFO, is the ammonia salt of perfluorooctanoic acid, having the chemical formula C7F15- CO2 - NH4 +. APFO is a commonly used FPA. This perfluorochemical is a powerful surfactant used to emulsify and stabilize fluoropolymer dispersions. APFO has several synonyms including C-8, PFOA, FC 143, and perfluoro ammonium octanoate. Fluoropolymer dispersions: Fluoropolymer dispersions are an aqueous form of fluoropolymer consisting of finely divided fluoropolymer particles suspended in water. They are frequently used as ingredients for coating compositions applied to metal surfaces or fiberglass cloth to create durable, nonstick surfaces.

Fluoropolymer Polymerization Aid (FPA): FPAs are members of a class of commercially available perfluoroalkyl carboxylate surfactants(e.g., ammonium and sodium perfluoro-octanoate). FPAs are used to suspend and emulsify some fluoropolymers during manufacture or industrial use and are typically used in concentrations less than 0.5%.

PFOA ISOMER INFORMATION

http://www.beck-shop.de/fachbuch/leseprobe/9781441968791_Excerpt_001.pdf isomer detection

http://www.pedz.uni-mannheim.de/daten/edz-h/gdb/10/final_report_pfoa_pfos_en.pdf

2010 details of mfg & use, gives detection method for age of PFOA via isomers page 22

http://www.ncbi.nlm.nih.gov/pubmed/24361923 Serum levels of perfluoroalkyl acids (PFAAs) with isomer analysis..."Interestingly, not only the PFAA concentrations but also the percentages of PFOS and PFOA isomers were correlated with certain medical parameters. This implies that the compositions of PFOS or PFOA should be considered in human health risk assessment in the future."

MANUFACTURE AND CHEMISTRY OF PTFE PRODUCTS

http://www.glenro.com/ptfe-manufacturing-properties-products.html Properties of PTFE & how to make various products from it.

http://www.eis-inc.com/files/pdf/supplier_showcase_page_downloads/zeus/intro_to_fluoropolymers.pdf & https://www.zeusinc.com/sites/default/files/files/Misc%20Files/Focus_on_PTFE_Zeus.pdf Description of PTFE & various products & their properties. "Today the fluoropolymer family consists of a range of homopolymers and copolymers to meet the demands of the industry."

http://catalog.ides.com/Datasheet.aspx?I=92041&FMT=PDF&U=0&CULTURE=en-US&E=137280 How to use dispersion to make filled solid parts like bearings (PFOA free as of 2014)

http://www.agcce.com/brochurespdfs/sales/Fluoropolymers_SafeGuide_EN.pdf **Guide for the Safe Handling of Fluoropolymer Resins** January 2012: Processing Hazards and Precautions, decomp temperatures & % graphs, process descriptions and warnings specific to each one about avoiding contact with toxic byproducts.

http://www.inoflon.com/FINE%20POWDER%20PTFE_PG.PDF Use of fine powder in oil to make plumbing tape, coated wire and other non-pfoa containing products. Process descriptions and machine pictures.

https://www.google.com/url?sa=t&rct=j&q=&esrc=s&source=web&cd=1&cad=rja&uact=8&ved=0ahUKEwjlqsTjuJ3MAhXKGB4KHRg7A2MQFggcMAA&url=http%3A%2F%2Fwww.fluoroconsultants.com%2Fsitebuildercontent%2Fsitebuilderfiles%2Fintroductiontofluoropolymers.pdf&usg=AFQjCNFyz_-h5wso3J0Tie1y-N-_-U3Blg&sig2=_I4o3ViF6D_6yqV0DMDRDQ

takes you to:

http://www.fluoroconsultants.com/sitebuildercontent/sitebuilderfiles/introductiontofluoropolymers.pdf

Introduction to Fluoropolymers : Sina Ebnesajjad, PhD FluoroConsultants Group, LLC: Details chemistry of making and using 10 different fluoropolymers, their properties, what mixes are used, decomp temperatures, and 73 references to key patents and product/process descriptions. Prices on pg 58

http://www.agcce.com/fluon-ptfe/ main site for a major supplier, FLUON brand fluorinated plastics, not just PTFE. All were used at Oak Materials at various times and plants. Descriptions of various forms of PTFE and how they are used to make various products.

http://www.thomasnet.com/products/ptfe-coated-fabrics-27310408-1.html makers of PTFE coated fabric in USA 32 Companies, 12 within 250 miles of Albany: manufacturers, fabricators & distributors

http://www.google.com/patents/US6794550 2004 3M patent which allows removal and recycling of PFOA "A particular advantage of the process is that the surprisingly high volatility of the PFOA to be removed during the thermal process of raising concentration means that it is removed "before the water" during distillation of the dispersion whose concentration is to be raised. It appears that under these conditions PFOA forms an "azeotrope" with water which boils at about 99° C. at atmospheric pressure. This may be a PFOA hydrate which has low water-miscibility. This means that a dispersion substantially free from PFOA can be prepared by distilling off only from about 5 to 10% of the amount of water to be removed. A very high concentration of PFOA is present in this two-phase mixture which passes over first. This two-phase mixture forms with identical concentration ratios in each of the two phases, independent of the distillation pressure. At relatively low cost, therefore, the PFOA can be recycled and reused in the emulsion polymerization."... Processes for converting recovered PFOA into "polymerization grade" PFOA are described in U.S. Pat. No. 5,312,935, U.S. Pat. No. 5,442,097 and U.S. Pat. No. 5,591,877." ...the fluoropolymer dispersions produced with the process of this invention can be used to coat substrates..., in particular glass fabrics" And yet St-Gobain was still using PFOA in 2014?

TOXICITY OF OVERHEATED PTFE

https://www.fluoridealert.org/wp-content/pesticides/teflon.polymer.fume.fever.htm

Collection of papers on poymer fume fever, lists titles & abstracts back to the 50's . One has thermal decomp products list: "The pyrolysis of Teflon starts at 200 degrees-C and proceeds slowly up to 420 degrees-C; at 500 to 550 degrees-C, the degradational weight loss reaches 10% to 5% per hour, respectively, depending on conditions. In the temperature range 300 to 360 degrees-C, hexafluoroethane (C2F6) and octafluorocyclobutane (C4F8) were identified as decomposition products. In the range 380 to 400 degrees-C, octafluoroisobutylene (also C4F8) could be detected and, at 500 to 550 degrees-C, the chief pyrolysis products other than tetrafluoroethylene (116143) (C2F4) were hexafluoropropylene (116154), (C3F6) octafluorocyclobutane, and octafluoroisobutylene plus a complex residue of perfluoroolefins. Inhalation toxicity tests indicated that the octafluoroisobutylene gas, the most potent product, was approximately ten times as toxic as phosgene"

http://pubs.rsc.org/en/Content/ArticleLanding/2003/AN/b212658c#!divAbstract thermal degradation of PTFE

http://www.nature.com/nature/journal/v412/n6844/full/412321a0.html *Nature* **412**, 321-324 (19 July 2001) : Thermolysis of fluoropolymers as a potential source of halogenated organic acids in the environment David A. Ellis[1], Scott A. Mabury[1], Jonathan W. Martin[2] & Derek C. G. Muir[3] " thermolysis of fluoropolymers in industrial and consumer high-temperature applications (ovens, non-stick cooking utensils and combustion engines) is likely to be a significant source of trifluoroacetate in urban rain water " ... " Thermolysis also leads to longer chain polyfluoro- and/or polychlorofluoro- (C3–C14) carboxylic acids"

https://www.researchgate.net/publication/267737177_Emissions_from_incineration_of_fluoropolymer_materials_-_A_literature_survey Detailed study of breakdown products of Fluoropolymers at high temperatures. Also includes

worldwide usage quantities. Little mention of PFOA since it is not found in finished PTFE or other plastics. Page 22 has a list of all PTFE breakdown products at various elevated temperatures from 450 to 1050 deg C. .

OTHER FLUORINATED CHEMICALS

http://www.well-labs.com/docs/pfc_quick_reference_guide.pdf Names, MW's, formulas, structure and production processes for about 120 different fluorinated chemicals.

http://www.nj.gov/dep/watersupply/pdf/pfna-health-effects.pdf

HEALTH-BASED MAXIMUM CONTAMINANT LEVEL SUPPORT DOCUMENT: PERFLUORONONANOIC ACID (PFNA) also cites much recent pfoa data and explains human pathways of exposure 195 pages

http://dec.vermont.gov/sites/dec/files/co/pfoa/documents/l4Post.pdf NJ discussion of C4 C5 C6 C8 C9 C10 C8-S C6-S C4-S in water, blood & environment. Transport & amounts found nationwide & in NJ

http://iaspub.epa.gov/triexplorer/tri_factsheet.factsheet?pstate=WV&pcounty=Wood&pyear=2013

In 2013 DuPont put 71,000 lb of the carcinogen gas tetrafluoroethylene into the air in Wood county, W Va, and a total of 1,400,000 lb of toxics into the surrounding air, land, and water . In 2007 4x as much went into the county air, no breakdown as to who did it or what it was is available, but it was probably DuPont with TFE & PFOA & related chemicals pfoa not listed

https://www.researchgate.net/publication/51572301_Strong_associations_of_short-chain_perfluoroalkyl_acids_with_serum_albumin_and_investigation_of_binding_mechanisms some of Laura's C4 & C6 work

MANUFACTURING, USE &TRANSPORT OF PFOA TO ENVIRONMENT

http://www.sciencedirect.com/science/article/pii/S016041201400124X **Global emission inventories for C4–C14 perfluoroalkyl carboxylic acid (PFCA) homologues from 1951 to 2030, Part I: production and emissions from quantifiable sources**

http://www.sciencedirect.com/science/article/pii/S0160412014001172 **Global emission inventories for C4–C14 perfluoroalkyl carboxylic acid (PFCA) homologues from 1951 to 2030, part II: The remaining pieces of the puzzle**

http://www.greensciencepolicy.org/wp-content/uploads/2014/10/Wang2014_Supplementary.pdf Supplement to above 2 papers, data details. Worldwide amounts, use and paths of PFOA (& other fluorinated chemicals C4-C14) to the environment. See especially pages 11-15 for types made and where and pages 16 & 17 for what %PFOA was used to make PTFE and what % was in dispersion. Page 26 confirms negligible PFOA in granular or fine powder PTFE.

https://www.pca.state.mn.us/sites/default/files/c-pfc1-01.pdf Minnesota Pollution control agency 2009 report huge &comprehensive see also "2012" report by minn doh

http://www.health.state.mn.us/divs/eh/hazardous/topics/pfcs/pha/woodbury/pha3m0112.pdf issued 2012, but prepared 2008-2010 big study by minn doh & us hhs

http://www.health.state.mn.us/divs/hpcd/tracking/biomonitoring/projects/pfcfinalrpt2009.pdf report on pfoa serum levels of the most exposed people in wash co, minn. Averaged 8 to 20 ppb, 90% less than 60 ppb. Current blood levels did not rise with # of years drinking local water.

https://books.google.com/books?id=iBCuMEfWwe8C&pg=PA39&lpg=PA39&dq=solubility+OR+water+OR+dissolve+OR+soluble+%22apfo%22&source=bl&ots=-lNZGphcl3&sig=L4yxFd1k2-6SZVihoNKyb2wGgaE&hl=en&sa=X&ved=0ahUKEwjn8NjQ-s3KAhWBloMKHae9Bqs4ChDoAQgqMAM#v=onepage&q=solubility%20OR%20water%20OR%20dissolve%20OR%20soluble%20%22apfo%22&f=false Partitioning coefficients for PFOA

Civil engineering doctoral dissertation by Catherine Arundel Barton of Univ.Delaware, 2008 : The Measurement, Partitioning and Near-field Modeling of Perfluorooctanoate (PFO) in Air full download costs $38 from Proquest: http://www.proquest.com/products-services/dissertations/pricing-for-copies-of-Individual-Dissertations.html

Particulate and vapor emissions of PFOA were tracked from the Parkesburg DuPont PTFE plant: 9 particulate, vapor and rain collector stations were set up. Looking at PFOA coming down in the rain during a 4 hour 1.15" rainstorm over the Dupont PTFE plant at Parkersburg, they found 1660 ppt in the rain next to the plant fence, (~100 feet from stacks), 52ppt 800 m away, 11ppt 1600 m away . Between a 1 and 2 mile radius it was between 2 and 8ppt. The PFOA was washed out as particulates in the smoke from the factory. A small amount of PFOA vapor found at the fence line, none beyond.

http://www.tandfonline.com/doi/abs/10.1080/10473289.2006.10464429#aHR0cDovL3d3dy50YW5kZm9ubGluZS5jb20vZG9pL3BkZi8xMC4xMDgwLzEwNDczMjg5LjIwMDYuMTA0NjQ0MjlAQEAw Another paper by Catherine, now a DuPont employee, which explains the financing of the above study. This paper is about methods, not results.

https://assets.documentcloud.org/documents/2782029/Chemrisk.pdf Pre-C8 transport study by Paustenbach of Chemrisk, cited by Shin

http://www.delawareonline.com/story/news/2016/04/01/dupont-illnesses-deaths-c8/81151346/ news report on Chemrisk transport study

https://www.researchgate.net/publication/236586062_Modeling_the_air-soil_transport_pathway_of_perfluorooctanoic_acid_in_the_mid-Ohio_Valley_using_linked_air_dispersion_and_vadose_zone_models pfoa settling: C8 transport study by Shin

http://detwiler.eng.uci.edu/pdfs/18_shin_EST_2011.pdf Environmental Fate and Transport Modeling for Perfluorooctanoic Acid Emitted from the Washington Works Facility in West Virginia

https://frtr.gov/pdf/meetings/nov13/presentations/barclift-presentation.pdf This is a presentation about a cleanup at a Navy base. Good explanation and illustrations showing how they define the plumes from multiple sources by soil and groundwater tests and how PFOA moves underground.

http://flyhamilton.ca/wp-content/uploads/2012/12/Initial-Subsurface-Investigation.pdf

A good example of how a site is evaluated by soil and groundwater testing. Detailed description of techniques and strategies. Study done in 2011 on a Canadian aviation fire fighting training site abandoned in 1994. Clay soil under gravel led to shallow penetration by PFOA, but it still is in groundwater at high levels and moving off-site. 68 p

https://www.researchgate.net/profile/Feng_Xiao6/publication/269179733_Perfluorooctane_sulfonate_PFOS_and_perfluorooctanoate_PFOA_in_soils_and_groundwater_of_a_US_metropolitan_area_Migration_and_implications_for_human_exposure/links/5501c3af0cf24cee39f903f1.pdf

Minnesota study: Abstract: Perfluorooctane sulfonate (PFOS) and perfluorooctanoate (PFOA) are emerging anthropogenic compounds that have recently become the target of global concern due to their ubiquitous presence in the environment, persistence, and bioaccumulative properties. This study was carried out to investigate the migration of PFOS and PFOA in soils and groundwater in a U.S. metropolitan area. " We observed elevated levels in surface soils (median: 12.2 ng PFOS/g dw and 8.0 ng PFOA/g dw), which were much higher than the soil-screening levels for groundwater protection developed in this study. **The measured levels in subsurface soils show a general increase with depth, suggesting a downward movement toward the groundwater table** and a potential risk of aquifer contamination. Furthermore, concentrations of PFOS and PFOA in monitoring wells in the source zone varied insignificantly over 5 years (2009–2013), suggesting limited or no change in either the source or the magnitude of the source. The analysis also shows that natural processes of dispersion and dilution can significantly attenuate the groundwater contamination; the adsorption on aquifer solids, on the other hand, appears to have limited effects on the transport of PFOS and PFOA in the aquifer. The probabilistic exposure assessment indicates that ingestion of contaminated groundwater constitutes a much more important exposure route than ingestion of contaminated soil. Overall, the results suggest that (*i*) the transport of PFOS and PFOA is retarded in the vadose zone, but not in the aquifer; (*ii*) the groundwater contamination of PFOS and PFOA often follows their release to surface soils by years, if not decades; and (*iii*) the aquifer can be a major source of exposure for communities living near point sources."

http://onlinelibrary.wiley.com/doi/10.1111/j.1745-6592.2012.01395.x/pdf This paper looks at multi year long lab studies of transport mechanisms and possible adsorption of PFOA in the sediment samples retrieved from under a PFOA&PFOS contaminated landfill. It showed that after an initial apparent high absorption, a year or two later the PFOA was essentially all released. In studying their own samples and comparing them to similar work done in other parts of the world they think that organic content (carbon in particular) can be responsible for an initial high absorption rate (good to know if you're using carbon filters) and that iron content of the minerals in the soil is the other main factor.

http://www.ncbi.nlm.nih.gov/pubmed/17671665

Partitioning and removal of perfluorooctanoate during rain events: the importance of physical-chemical properties. Abstract: The potential for airborne emissions to undergo long-range transport or to be removed from the atmosphere is influenced by their physical-chemical properties. When perfluorooctanate (PFO) enters the environment, its physical-chemical properties can vary significantly, depending on whether it exists as an acid, a salt, or a dissociated ion. A summary of the physical-chemical properties of the three most likely environmental states: ammonium perfluorooctanoate (APFO), perfluorooctanoic acid (PFOA) and the dissociated perfluorooctanoate anion (PFO(-)) is presented... it is unlikely that rain events are a significant source of vapor-phase PFOA for the general North American region. It is shown that PFOA exists primarily in the particle phase in ambient air near direct sources of emissions and is efficiently scavenged by rain droplets, making wet deposition an important removal mechanism for emissions originating as either PFOA or APFO. Washout ratios of particle-associated PFO were determined to range between 1 x 10(5) and 5 x 10(5), in the same range as other semi-volatile compounds for which wet deposition is an important mechanism for atmospheric removal and deposition onto soils and water bodies.

http://pubs.usgs.gov/of/1991/0199/report.pdf 177 page treatise on groundwater and geology in Rhode Island. Basics of how various contaminants get into water and how they move around underground. Not specific for PFOA, but good general info.

http://www.epa.gov/toxics-release-inventory-tri-program/tri-basic-data-files-calendar-years-1987-2014 Toxics Release Inventory (TRI) Program Does not include PFOA, but shows related amount of pollutants and where they go.

https://theintercept.com/2016/04/19/teflon-toxin-contamination-has-spread-throughout-the-world/ Worldwide PFOA contamination story. One person in China where at least 56 companies produce PFCs has 31,400 ppb. In his blood. Other stories can be found here as well.

http://www.ncbi.nlm.nih.gov/pubmed/17593716 frying pan and popcorn bag emissions of PFOA

LOCAL MANUFACTURING TRANSPORT OF PFOA TO ENVIRONMENT

This topic is supported mainly by diagrams and pictures of manufacturing equipment used locally, available from DH.

PATHWAYS OF VAROUS TOXIC CHEMICALS INTO THE ENVIRONMENT FROM PTFE COATING TOWERS Summary by DH, copy available by request at dhassel@nycap.rr.com

Data from all VT DEC & Chemfab communications also available from Vt DEC

http://www.epa.ie/licences/lic_eDMS/090151b2800f4c7c.pdf St-Gobain study of PFOA going into air around plant in Ireland. Was probably the one that Chem-Fab built there and the USA sister plant referred to is probably Merrimac. Confirms that .15% PFOA was still in the dispersion in 2006, and that work was being done to remove it to comply with the DuPont/EPA agreement. Claims that due to heat, only 11% of PFOA made it out without any details or explanation, was probably just a ruse. Also fails to mention that "thermally degraded" C8 is just C7, just as bad.

http://pfoadatabase.org/WellMap HF well map: private website, updated periodically. Includes PFOA ppt, well elevation & well depth

http://www.renstrust.org/rensselaer-county-watersheds/113-renssco-watersheds-map watersheds & water districts in rens co.

http://www.rensco.com/pdfs/MS4/MS4_hydrology.pdf HF wetlands map

http://www.epa.gov/toxics-release-inventory-tri-program/tri-basic-data-files-calendar-years-1987-2014 Toxics Release Inventory (TRI) Program. Can use this to look up all St-Gobain registered emissions in NYS. Looking at Rens co., shows glycol ethers (triton x-100?) at Liberty St. but no listings for McCaffrey St. NYSDEC also has no listings for McCaffrey St. Is this an address mistake or did they not register any emissions from McCaffrey St.? This is EPA's detailed national listing by year, company and chemical what toxic pollutants went out eg. DuPont in Wood Co. Va put 20821 lb of Fluorine gas into the atmosphere over their plant in 2007.

http://dec.vermont.gov/sites/dec/files/documents/07-2016-Final-Draft-Shallow-Soil-Sampling.pdf

Final report on soil sampling in surrounding areas of Chemfab -- A summary of soil sampling results from a draft report produced by Saint-Gobain's contractor were shared back in April 2016. That report has been reviewed and approved by the Vermont DEC, pending the submission of original data sets. In review, here are the major findings from the soil testing survey:

- The majority of soil samples have less than 10 ug/kg (ppb) of PFOA, and all samples were below Vermont Soil Screening Values of 300 ppb.
- There is no trend in the average perfluorinated compounds (PFCs) and average PFOA concentration data within increasing depth below surface.

- *******! There appears to be a linear declining trend between highest average of total PFCs and PFOA, and the distance from the site.
- DH comments: This item supports air source as main source. Shows at least 10x decrease 1 mile away, 4-20 ppb>0-2 ppb. Shows 10 to 20% as much each C4>c10 as C8. Total PFC's 3x to 10x C8.

DISCOVERY & REMEDIATIONOF PFOA CONTAMINATION, FARM & VEGETABLE ISSUES

http://static.ewg.org/reports/2015/pfoa_drinking_water/interactive_map/index.html?_ga=1.138583539.1393796639.1450016744 water contamination pfoa national map in ny: Jeff co. found 80ppt pfoa , Orange county 170ppt

https://groups.yahoo.com/neo/groups/Newarktrash/conversations/messages/4668 bottled water spring contamination

http://www.enviroblend.com/userdata/userfiles/file/RE3%202014/2014%20presentations/Block_R3%20presentation%202014.pdf and http://www.redox-tech.com/doc_download/89-hicks-presentation.html Slide show overviews of different methods for destroying PFOA and other chemicals in soil. Shows graphs from several of the following papers

http://pubs.acs.org/doi/abs/10.1021/ez4000862 subsurface degradation chemistry: looks very promising but is too technical for me to evaluate whether it could be used on your water and/ or ground It might be worth contacting these people.

http://pubs.acs.org/doi/abs/10.1021/es0484754 **Efficient Decomposition of Environmentally Persistent Perfluorocarboxylic Acids by Use of Persulfate as a Photochemical Oxidant** Photochemical decomposition of persistent PFOA in water by use of persulfate ion (S2O82-) was examined

http://or.nsfc.gov.cn/bitstream/00001903-5/22218/1/1000003570676.pdf Electrochemical degradation of perfluorooctanoic acid (PFOA) by Ti/SnO2eSb, Ti/SnO2eSb/PbO2 and Ti/SnO2eSb/MnO2 anodes. "the degradation rate constant and the degradation half-life were 0.064 min1 and 10.8 min, respectively"... ". The electrochemical technique could be employed to degrade PFOA from contaminated wastewater as well as to reduce the toxicity of PFOA."

http://link.springer.com/article/10.1007/s11783-011-0371-x **Decomposition of perfluorooctanoic acid by microwaveactivated persulfate: Effects of temperature, pH, and chloride ions** Microwave-hydrothermal treatment of persistent and bioaccumulative perfluorooctanoic acid (PFOA) in water with persulfate ($S_2O_8^{2-}$) has been found effective

http://www.ncbi.nlm.nih.gov/pmc/articles/PMC4261166/ orhttp://www.nature.com/articles/srep07418 **Complete mineralization of perfluorooctanoic acid (PFOA) by γ-irradiation in aqueous solution.** This research was probably inspired by the deaths of several people after a blood treating machine was sterilized by gamma radiation and the radiation broke down the PTFE parts of the machine and the resulting toxins washed off into the blood and were fatal. It is an intriguing way to remove PFOA from GC, however, but only as long as you are careful to get it all fully decomposed !

http://wenku.baidu.com/view/5a73d34ee518964bcf847c91.html **Efficient decomposition of PFOA and alternative Fluorochemical Surfactants in Hot Water** We found that PFCAs and perfluoroethercarboxylicacids could be effectively decomposed in hot water to F- and CO2 at a relatively low temperature(80°C) ... the addition of persulfate (S2O8 2-) to the reaction system led to efficient decomposition

http://web.hku.hk/~kshih/RJP/2012_LCS_SPT_E.pdf **Effect of temperature on oxidative transformation of perfluorooctanoic acid (PFOA) by persulfate activation in water**

Conclusions This work illustrates the mechanism and performance of PFOA oxidative degradation by persulfate in 85 C water with initial PFOA concentrations at sub-micro molar level (200 ng/L). PFOA was found to degrade, and this degradation was accompanied by release of fluoride ions after the generation of sulfate radicals from heat-activated persulfate. A step-by-step process of losing one CF2 unit from the molecule structures of PFOA and its intermediates were observed in the PFOA degradation. The behavior of PFOA degradation generally follows pseudo-first-order kinetics and the kinetics constants increase at higher initial persulfate concentrations. At reaction temperatures lower than 85 C, the PFOA degradation rates are significantly decreased. In addition, lower reaction pH may enhance the scavenging of sulfate radicals at elevated temperature, leading to inhibition of PFOA degradation.

http://www.peroxychem.com/media/22910/FMC_Peroxygen_Talk_2011-12_Treatment_of_PFOS_and_PFOA.pdf Conclusions: A review of the available studies shows that oxidation based technologies such as activated persulfate have significant potential to treat PFOS/PFOA impacted soil and groundwater...

https://books.google.com/books?id=WGz1AwAAQBAJ&pg=PA101&lpg=PA101&dq=thermal+decomposition+of+pfoa&source=bl&ots=JmlWh1O4GL&sig=19-tO_6KQ20zkRmlqp03vUWq75Q&hl=en&sa=X&ved=0ahUKEwiwtJm11c_NAhXm54MKHXCIBQI4ChDoAQg8MAQ#v=onepage&q=thermal%20decomposition%20of%20pfoa&f=false book excerpt from: **Nanotechnology for Water Treatment and Purification**

> β-Ga_2O_3 showed remarkably high activity in comparison to the needle-like β-Ga_2O_3 and commercial β-Ga_2O_3 as the larger surface area of the sheaf-like β-Ga_2O_3 provides more adsorption and reaction centers. Meanwhile, compared to TiO_2, all three β-Ga_2O_3 samples exhibited better photocatalytic activity for PFOA decomposition. The excellent performance of the synthesized β-Ga_2O_3 for PFOA decomposition can be attributed to their unique bonding to PFOA, which is similar to that

http://digital.bnpmedia.com/article/PFOA+is+Destructible/1008212/0/article.html **PFOA is Destructible**

"One report[14] assessed differing methods to activate persulfate to treat PFOS, but adapted methodologies to use persulfate activation methods that can be used more easily to treat contaminated soils, sediments and groundwater.Treatments that more successfully destroy PFOS including Fenton's reagent, Fenton's reagent activated persulfate, H2O2 activated persulfate and heat activated persulfate, all of which showed a greater than 97.5 percent PFOS destruction."

https://www.researchgate.net/publication/233338848_Degradation_and_reduction_of_acute_toxicity_of_environmentally_persistent_perfluorooctanoic_acid_PFOA_using_VUV_photolysis_and_TiO2_photocatalysis_in_acidic_and_basic_aqueous_solutions A way to deal with waste PFOA—could have been used on the scrubber wastewater if PFOA had been known to be toxic.

http://www.ncbi.nlm.nih.gov/pubmed/25386873 **Perfluoroalkyl acid uptake in lettuce (Lactuca sativa) and strawberry (Fragaria ananassa) irrigated with reclaimed water.** ". Excerpt from my letter about this: The implication of this is that if you water your garden with PFOA contaminated water, the water content of the produce will contain the same amount of PFOA as the water you used, maybe even much less if you had a lot of compost or peat in your garden soil. This is much less scary than telling people that it bio accumulates 100x. I'm not trying to play down the toxicity of this stuff, just trying to be accurate in telling what happens.

http://www.sciencedirect.com/science/article/pii/S0022113905002484 **Gas-phase NMR studies of the thermolysis of perfluorooctanoic acid** ☆ "By contrast, the pyrolysis of ammonium perfluorooctanoate is more facile by orders of magnitude and proceeds by first-order kinetics at essentially the same rates in both quartz and borosilicate ampoules with an estimated half-life of 2 s at 307 °C." Vermont DEC almost had it right in the 1980's and 90's. If they had required the use of much cheaper borosilicate glass as a catalyst instead of platinum in the thermal incinerators used at Chem-Fab in North Bennington, all the PFOA would have been destroyed. Too bad this paper wasn't available until 2005.

http://link.springer.com/article/10.1007/s11356-015-5353-2 **Thermal mineralization behavior of PFOA, PFHxA, and PFOS during reactivation of granular activated carbon (GAC) in nitrogen atmosphere** The basics of a possible way to regenerate GAC filters for PFOA or at least destroy the PFOA in GAC filters before discarding them.

http://petersburgh.org/content/Generic/View/11:field=documents;/content/Documents/File/434.pdf Page 7 of this 2014 EPA document summarizes most of the current technology available up until 2012 for remediation, but not all.

http://archive.constantcontact.com/fs122/1111234994262/archive/1123657008219.html This is a group of people from various state DEC's and the EPA , mostly from the Northeast. They exchange research on remediation and discovery of toxics.

https://www.researchgate.net/publication/235738999_Absorption_distribution_and_milk_secretion_of_the_perfluoroalkyl_acids_PFBS_PFHxS_PFOS_and_PFOA_by_dairy_cows_fed_naturally_contaminated_feed " However, screening tests of cropping soil indicate a high contamination with PFOA and PFOS ranging from <10 to 240 µg/kg dry matter (DM) and from 31 to 3300 µg/kg DM, respective" "the experimental diet contained PFAA-contaminated grass silage and hay, which grew on a PFAA-contaminated farmland in Lower Saxony, Germany. "

CARBON FILTER USE & ISSUES

http://www.waterrf.org/PublicReportLibrary/4322.pdf Study of municipal PFOA carbon filter performance., carbon filter breakthrough due to organic carbon pg 36 + Also rates carbon types for filters

http://www.waterrf.org/resources/StateOfTheScienceReports/PFCs_StateOfTheScience.pdf#search=pfoa Summary of above paper, emphasis on identifying PFASs & PFCs and which type of filtration works for them.

http://generalcarbon.com/liquid-filtration/gc-12x30sci/ activated carbon grades

http://www.sciencedirect.com/science/article/pii/S2352186415000243 **Treatment technologies for aqueous perfluorooctanesulfonate (PFOS) and perfluorooctanoate (PFOA): A critical review with an emphasis on field testing** "However, a number of limitations to the use of activated carbon exist, such as being ineffective at removing PFOA and other PFCs. Other adsorbents that have the potential to treat aqueous PFOS and PFOA include organo-clays, clay minerals and carbon nanotubes."

http://callielyons.blogspot.com/2010/04/cincinnati-water-works-comes-clean.html Cincinnati data question effectiveness of removing 11ppt of PFOA . 10ppt apparently passed after filters had been in use for a few years.

http://www.montclairnjusa.org/index.php?option=com_content&view=article&id=5889:pfoa-in-montclair-water&catid=286:water-bureau&Itemid=668 Here's how the limit works; NJ set a limit for its water at 40ppt. After a few years, guess what violations levels start to show up : "The Township's most recent "Annual Drinking Water Quality Report" from 2014 showed sampling readings from Montclair's three wells to be above the New Jersey

Department of Environmental Protection (DEP) PFOA guidance level of 40 parts per trillion (ppt). The wells were sampled twice in 2015 and the readings were found to be at 35, 44, 48, 42, 46, 42 ppt." Some were even blending contaminated well water with cleaner surface water to try and "hit" 40 and erred and got caught. This proves my theory that setting a low limit is very important. When a level such as 100 is set, operators will be pressured not to do the expensive maintenance on the carbon filters until the PFOA level reaches 99 ppt. That just how government works, and must be taken into account.

http://www.commwater.com/wp-content/uploads/2014/03/silentspringreport2010.pdf). In recent conversations, she told me that she has put Carbon filters on the wells with high PFOA, and that as I suspected, the operators tend to let the levels of PFOA go right up to whatever level is set, (she calls it "the redline")not keep it "undetectable. "

An even more scary thought is that most all municipal water systems, even relatively new ones like HF, typically lose 10% or so of their water to leaks. Pouring hundreds (or thousands, occasionally?) of gallons per day of 600+ppt water into the ground for decades cannot be good, but it is very likely that it happened and continues.

MEDICAL STUDIES OF PFOA

C8 SCIENCE PANEL

http://www.gpb.org/files/pdfs/georgiagazette/dupont_website_PFOA_position.pdf "Moreover, if the Science Panel delivers a "No Probable Link" finding for all human diseases, all personal injury claims of any Class member are released. Stated another way, all claims for personal injury will be released except those for any disease for which the Science Panel makes such a probable link finding. Without knowing the Science Panel's conclusions, the Company cannot predict whether it will incur any such losses, although it believes it is remote that the Science Panel will find any such probable link." ..." Accordingly, the Company does not believe that these product-related lawsuits have any merit and, therefore, believes it is remote that it will incur material losses." This statement by DuPont reveals why they were willing to fund the C8 study: they thought that with the help of Weinberg, they could get a result that favored them.

http://www.athensmessenger.com/news/c-panel-releases-final-reports/article_480dde89-f3c1-5ccf-b156-71b6b75ee1d6.html news report on final c8 report

http://www.c8sciencepanel.org/prob_link.html final c8 report, probable link summaries

http://www.ncbi.nlm.nih.gov/pubmed/21813367 Retrospective exposure estimation and predicted versus observed serum perfluorooctanoic acid concentrations for participants in the C8 Health Project

http://www.ncbi.nlm.nih.gov/pmc/articles/PMC3855514/ Perfluorooctanoic Acid (PFOA) Exposures and Incident Cancers among Adults Living Near a Chemical Plant Cancer details.

http://ehp.niehs.nih.gov/1002503/ Private Drinking Water Wells as a Source of Exposure to Perfluorooctanoic Acid (PFOA) in Communities Surrounding a Fluoropolymer Production Facility **"Objective:** We assessed PFOA

exposure via contaminated drinking water in a subset of C8 Health Project participants who drank water from private wells." C8 tested 62 private wells multiple times. Results: avg pfoa in blood 75.7 ppb, and typically was 141 x the amount found in the water : avg ~1000 ppt

http://ehp.niehs.nih.gov/0800294/ Predictors of PFOA Levels in a Community Surrounding a Chemical Plant. based on C8 study data

https://www.epa.gov/sites/production/files/2016-05/documents/pfoa_hesd_final_508.pdf **Health Effects Support Document for Perfluorooctanoic Acid (PFOA) Environmental Protection Agency Office of Water**

EPA paper denying validity of C8 conclusions about cancer: see page 3-60, quoted by many State DOH's.

http://www.tandfonline.com/doi/full/10.3109/10408444.2014.905767

A critical review of perfluorooctanoate and perfluorooctanesulfonate exposure and cancer risk in humans. Chang, E T. Weinberg style paper used by above "Health Effects" EPA paper to dispute C8 Science panel findings. Written using 3M and DuPont written and sponsored studies and others which have no real connection or valid comparison to the C8 work to try and fool the EPA. Apparently worked. Written by 3M consultants to support 3M and DuPont. Paid for by 3M with the hope of saving hundreds of millions of dollars in class action suits brought against 3M and DuPont. Given the interest 3M & DuPont have in this, it is very improper for EPA to use it for anything.

C8 MEDICAL PANEL

http://www.c-8medicalmonitoringprogram.com/docs/med_panel_education_doc.pdf screening test recommendations

http://www.hpcbd.com/dupont/Medical-Panel-Report-2013-05-24.pdf Full description of screening tests DuPont must pay for.

http://www.hpcbd.com/Personal-Injury/DuPont-C8/C8-Links-Between-Exposure-and-Health-Effects.shtml Effects of PFOA identified in various studies including C8, updated to 2015 publications

http://adamcbowen.com/axyscorp/documents/2015/07/c8-healthproject-how-a-class-action-lawsuit-can-interact-with-public-health-history-of-events.pdf DuPont agreed to spend up to $235,000,000 on follow up "medical monitoring program for area residents" 2008

http://www.hpcbd.com/Personal-Injury/DuPont-C8/Get-Medical-Monitoring-Now.shtml Evidence that the C8 Medical Panel is not being properly run: as of 6/6/2016, $13,000,000 has gone to the Rozen law firm chosen by DuPont, who has prevented the Brookmar group that prepared the C8 follow-up program from conducting it. Less than $1,000,000 has been spent on the people's medical follow-up by Rozen.

http://trofire.com/2015/09/23/doctor-links-cancer-in-local-resident-to-chemical-dupont-dumped-into-the-water/ " ....he concluded that the chemical was a substantial factor in her getting cancer in her kidney. Further, Dr. Bahnson was able to dismiss the suggestion that her cancer was hereditary by looking at the type of cancer involved in her kidney" "Dr. Bahnson concluded: "based on my records for Ms. Bartlett, as well as my training and experience, I have considered

and ruled out the following risk factors as potentially contributing to Ms. Bartlett's kidney cancer: she was a 41-year old Caucasian woman with no history of genetic and hereditary risk factors, hypertension, smoking, workplace chemical exposure, advanced kidney disease, or use of phenacetin or diuretics. Finally, as stated above and in my deposition on this matter, I do not believe her obesity at the time of her diagnosis was a contributing factor to her kidney cancer. Thus, having ruled out these potential risk factors, I find to a reasonable degree of medical certainty that Carla M. Bartlett's exposure to C8 in her drinking water was a substantial factor in bringing about the development of her kidney cancer."" She was awarded $1,600,000.

http://www.dispatch.com/content/stories/local/2016/05/31/fourth-dupont-case-set-to-start-tuesday-in-federal-court.html 4th case going to trial, first testicular cancer. One dropped by change in diagnosis. Next up will be 2 more Kidney cancer, then 240 cancers starting 4/2017.

http://www.dispatch.com/content/stories/local/2016/06/17/Man-takes-stand-in-DuPont-case.html

http://www.dispatch.com/content/stories/local/2016/07/04/jury-to-decide-whether-dupont-caused-mans-cancer.html begin deliberations Tuesday morning 7/5/16 DuPont concluded in the 1980s that the safe blood level for continued exposure to C8 was 5,000 parts per billion. Tests of residents in the Little Hocking Water Association, where Freeman lived, showed a median level of 354 parts per billion. Freeman reported that he had 254 parts per billion Diagnosed 2000, trial 2016.

http://www.delawareonline.com/story/news/2016/07/08/jury-orders-dupont-pay-500k-punitive-damages/86862354/ " DuPont challenged Freeman's claims during the trial. Attorneys for the company alleged that his exposure did not rise to a level that would cause cancer." See above he was at 254 ppb. Awarded 5.6 million .

http://www.chipleypaper.com/zz/lifestyle/20160420/list-of-cancers-being-taken-down-by-immunotherapy-keeps-growing-video "the infusion drugs already have been approved for use against lung and kidney cancers."

IMMUNOTOXICITY OF PFOA

https://www.youtube.com/watch?v=cOFFQ7cPAOM Philippe Grandjean on PFC toxicity in children. TV presentation

http://ehjournal.biomedcentral.com/articles/10.1186/1476-069X-12-35 **Immunotoxicity of perfluorinated alkylates: calculation of benchmark doses based on serum concentrations in children**
Hello - Thank you for asking. As you can see from the study linked below, even a lowered EPA limit of 100 ppt will not offer the protection that I would recommend. I also attach a brief report on our recent findings on vaccinating adults. We have more results on their way, and toxicity to the immune system seems a recurrent finding that should not be ignored. I hope this is helpful to you. - PG

http://europepmc.org/abstract/MED/26181512 **Antibody response to booster vaccination with tetanus and diphtheria in adults exposed to perfluorinated alkylates.** (DH has full text copy from PG)

http://europepmc.org/abstract/MED/23840160 source for some of Phillipe's papers

BACKGROUND ON DIPHTHERIA:
http://apps.who.int/immunization_monitoring/globalsummary/timeseries/tsincidencediphtheria.html worldwide and historic diphtheria case data

https://books.google.com/books?id=tbgBneqKu6MC&pg=PA1055&lpg=PA1055&dq=diphtheria+in+faroe+islands&source=bl&ots=OD5w82HzD-&sig=cV_DAQaD82y21H9vOcCGEN8NunM&hl=en&sa=X&ved=0ahUKEwid3dPjlNTKAhUEZCYKHUE6AuM4ChDoAQgoMAM#v=onepage&q=diphtheria%20in%20faroe%20islands&f=false book excerpt discussing historic diphtheria studies back to 1888, including ones in the isolated Faroe islands

https://www1.maine.gov/dhhs/mecdc/environmental-health/eohp/wells/documents/pfoameg.pdf

2014 Maine study compares all other state limits, admits its 100ppt limit is above immunotoxicity limit for children.

OTHER GENERAL STUDIES, EPA, STATES, 3M ETC.

https://www.epa.gov/sites/production/files/2015-09/documents/pfoa-pfos-provisional.pdf 2009 400ppt PFOA, 200ppt PFOS short term advisory.

https://www.epa.gov/sites/production/files/2016-05/documents/pfoa_hesd_final-plain.pdf EPA garbage, see page 3-60. For cancer they grouped the 60,000 person study with 17 others with about 100 each and concluded that the majority of them had no statistical significance, and that the C8 study only reached its conclusion through chance or bias. 3M paid for the study cited and DuPont apparently owns these people.

https://www.gpo.gov/fdsys/pkg/FR-2016-05-25/pdf/2016-12361.pdf 5/25/2016 see page 33251, top left. Please quote this to say that if people are drinking water with over 70 ppt PFOA and/or PFOS , that adverse health effects ***are*** anticipated to occur.

http://www.waterboards.ca.gov/gama/docs/pfoa.pdf California water information sheet, summarizes properties and medical effects of PFOA and cites other state's advisory limits.

http://healthvermont.gov/enviro/pfoa.aspx Vermont DOH website, Lots of good medical info for people and doctors.

http://new.sagepub.com/content/25/2/147.full.pdf+html 2015 Harvard lit review By PG & RC
http://keepyourpromisesdupont.com/perfluorinated-alkyl-substances-emerging-insights-into-health-risks/ reader copy: Overview of PFOA/PFOS studies and why regulatory agencies are setting too high levels and not doing their job for these chemicals.

https://www.pca.state.mn.us/sites/default/files/3mchemolite-attach9.pdf 2006 New Jersey risk assessment for PFOA : Sets state limit at 40ppt and explains why. Includes data from EPA on Parkersburg area studies to conclude that blood levels are typically 100x water levels , and uses that to set water advisory level. Chart of age vs average level in blood for 326 Ohio residents who lived near the Parkersburg plant is quite scary. Range was 7 to 4520 ppb, average for kids and oldsters was 600, for middle age 300 ppb. This blood data was taken before the C8 study, and probably included mostly Little Hocking residents. Concludes that 60ppt is cancer risk and 40 ppt is risk of other diseases, so uses 40 ppt as limit.

https://java.epa.gov/oppt_chemical_search/proxy?filename=2009-6-8EHQ-09-00373DC_8ehq_0609_00373dc.pdf 2009 Published version of above NJ paper. Includes more data

http://www.atsdr.cdc.gov/toxprofiles/tp200.pdf
DRAFT TOXICOLOGICAL PROFILE FOR PERFLUOROALKYLS
U.S. DEPARTMENT OF HEALTH AND HUMAN SERVICES Public Health Service Agency for Toxic Substances and Disease Registry
Dated 2015, but no new info except references (some 2014)appears to be added since 2009

http://www.health.state.mn.us/divs/hpcd/cdee/mcss/documents/WashingtonDakota2015.pdf 2015 geographical cancer update summary:

Tables show similar 1.1x to 7x for same group of cancers as C8, especially kidney, prostate, breast, lung and liver. Mesothelioma shows up at 1.7x for women. "New breast cancer cases occurred more often than expected in both Dakota and Washington Counties. In the more recent time period, 2003 to 2012, the number of new breast cancer cases was about 10% more frequent than expected in both counties. This relative percentage represents about 150 women in each county. For the earlier time period, 1988 to 2002, breast cancer appeared to occur somewhat more frequently than expected in Washington County, but the difference did not reach statistical significance. Breast cancer occurrence was higher in Dakota County over this earlier time period, again by about 10%. Although these estimated differences are not large on a percentage basis they are noteworthy because they potentially represent a large number of women, and the results are relatively consistent over time. Similarly, from 2003 to 2012 occurrence of prostate cancer was 10% higher than expected among males residing in Washington County."

http://ehp.niehs.nih.gov/wp-content/uploads/122/2/ehp.1306613.pdf Breastfeeding: A Potential Excretion Route for Mothers and Implications for Infant Exposure to Perfluoroalkyl Acids: Debapriya Mondal,1,2 Rosana Hernandez Weldon,3 Ben G. Armstrong,1 Lorna J. Gibson,1 Maria-Jose Lopez-Espinosa,1,4 Hyeong-Moo Shin,5 and Tony Fletcher1

"For mothers who were not exposed to PFOA above background levels after the index child's birth, serum concentrations were 7% lower (95% CI: –11, –2%) with each month of breastfeeding. Among women with ongoing exposure, serum PFOA concentrations were also negatively associated with breastfeeding, but differences were less pronounced, and estimates were close to the null for women with medium or high levels of ongoing exposure."

http://www.google.com/patents/US5593672 metal fume fever as a treatment to fire up immune system to fight cancer: uses my modified TEOM to measure dose. Probably a failed attempt, but the effort illuminates some aspects of what polymer fume and metal fume fever do to the human body.

http://lifescapepremier.com/2013/07/12/study-reveals-chemical-link-to-arthritis-in-women/
http://ehp.niehs.nih.gov/1205673/ **Association of Osteoarthritis with Perfluorooctanoate and Perfluorooctane Sulfonate** 2x

LOCAL MEDICAL DATA

https://www.health.ny.gov/environmental/investigations/hoosick/docs/infosheetgrouplong.pdf nysdoh blood data for people on and off village water. Values high, avg 60 as expected, many much higher. 19 > 400 ppb

http://statecancerprofiles.cancer.gov/incidencerates/index.php?stateFIPS=36&cancer=072&race=00&sex=0&age=001&type=incd&sortVariableName=rate&sortOrder=default#results Rens. co kidney cancer cases 39 per year 2nd highest rate in state @22/100000

http://seer.cancer.gov/statfacts/html/kidrp.html current NYS & national kidney cancer rate 16.5/ 1000,000 per year

https://gis.cancer.gov/geoviewer/app/ NIH NCI cancer site maps

The relevance of the C8 study to Hoosick Falls residents Summary by DH, copy available by request at dhassel@nycap.rr.com

THE REAL ISSUES; HOW MANY EXTRA CASES OF KIDNEY CANCER DOES THE C8 STUDY PREDICT FOR HOOSICK FALLS? HOW MANY OF THE 11 ANNUAL EXCESS CASES OF KIDNEY CANCER IN RENSSELAER COUNTY CAN BE BLAMED ON PFOA? Summary by DH, copy available by request at dhassel@nycap.rr.com

http://www.dhhs.nh.gov/dphs/documents/pease-pfc-blood-testing.pdf Pease, New Hampshire blood tests with extensive breakdown by years exposed, and many other variables, PFOA levels were not > 3-4 ppb, so background levels were dominant

http://www.cancer.gov/publications/patient-education/wyntk-kidney.pdf Kidney cancer info booklet by NCI

http://www.cancer.org/cancer/kidneycancer/detailedguide/kidney-cancer-adult-survival-rates KC survival by stage, ACS

LEGAL HISTORY OF PFOA

http://www.nytimes.com/2016/01/10/magazine/the-lawyer-who-became-duponts-worst-nightmare.html?_r=0 ny times/ Rob Bilott

https://www.epa.gov/sites/production/files/2016-05/documents/dupont-finalorder09.pdf 2009 consent order for DuPont to provide remission for any local water source having more than 400 ppt PFOA (was previously 500 ppt) . see items 22 & 23 on page 3 This was a long fought battle that got carbon filters for Parkersburg and a few private wells 3 years after others had them. It also has conditions for maintenance and 5 year follow-up after discontinuance of GC filters, allowable if PFOA levels of the raw water drop below 400ppt. One wonders if this is now being revised to 70 ppt. It would make sense to do so, but common sense does not appear to be a criteria that overrules $'s for EPA.

https://www.epa.gov/sites/production/files/2016-05/documents/dupont-fs0309.pdf EPA note on above, 4 pages

LEGISLATIVE & OTHER GVT. INVOLVEMENT

https://www.epa.gov/sites/production/files/2015-12/documents/hoosickfallsmayorpfoa.pdf 16 page letter about PFOA from Judy to Mayor David B. Borge Hoosick Falls. 11/25/15

https://www.scribd.com/doc/303724792/AdministratorMcCarthy-PFOA-Contamination Letter to EPA admin. Gina from 3 Governors.

http://blogs.edf.org/health/2015/07/08/how-the-senate-and-house-tsca-reform-bills-stack-up-against-the-administrations-principles-for-tsca-reform/ How the Senate and House TSCA reform bills stack up against the Administration's Principles for TSCA Reform By RICHARD DENISON | BIO | Published: JULY 8, 2015

http://www.c-span.org/video/?327016-1/epa-administrator-gina-mccarthy-testimony-proposed-regulations Administrator Gina McCarthy testified at a hearing on proposed Environmental Protection Agency regulations.

http://www.c-span.org/video/?c4580329/congressman-gibson-questions-epa-administrator-gina-mccarthy-hoosick-falls-water-contamination Chris Gibson questions her about HF and she gives very poor answers, attacks Judy, and asks for money. Shows ignorance by calling PFOA a "new chemical".

http://blog.timesunion.com/capitol/archives/266820/live-blog-state-senate-water-quality-hearing-in-hoosick-falls/#photo-773078 TU Summary of NYS senate hearings, 8/30/16 at HF HS auditorium

http://blog.timesunion.com/capitol/archives/266803/full-list-of-witnesses-for-tuesdays-senate-hearings-in-hoosick-falls/ witnesses to above

DENIAL OF TOXICITY OF PFOA

http://nhpr.org/post/des-criticized-understating-health-risks-merrimack-water-contaminant rob billot NH letter criticizing their claim of non-toxicity. Cites various references that "prove " toxicity of PFOA

https://theintercept.com/2015/08/20/teflon-toxin-dupont-slipped-past-epa/ This one includes the story of DuPont hiring the Weinberg Group to put together a plan for controlling the Scientific community and literature to try and prevent EPA from regulating PFOA (they succeeded) and keep the courts and state gvts. from hearing about or disseminating the toxicity of PFOA (an ongoing battle which they are winning)

https://www.documentcloud.org/documents/2289501-weinberg-memo.html This says it all about how DuPont came to dominate the PFOA question and prevent the EPA from acting, among other horrible acts. It is the Weinberg memo, introduced in a Kidney cancer case against DuPont. DuPont tried to get it quashed and failed: https://www.levinlaw.com/sites/www.levinlaw.com/files/2015-09-04-weinberg_group.pdf Court ruling on Weinberg memo

https://www.health.ny.gov/environmental/investigations/hoosick/ NYSDOH quotes are from the two documents under heading "More Information About Blood Testing Available". DuPont's influence is clear

> "Some human health studies have found associations between PFOA exposure and health effects and others have not. In addition, the studies that found associations were not able to determine with certainty if the health effects were caused by PFOA or some other factors."

"Because scientists and public health experts are still learning about PFOA and human health, the blood testing result does not indicate if a person's current illness is due to PFOA, or if a person will experience illness in the future due to PFOA. The result only provides exposure information"

OTHER LOCATIONS IN US USING PFOA

http://www.dewal.com/contact-us/#tab-id-1 Narraganset, RI plant

http://www.newtex.com/contact

Newtex coated fabrics . Looking at back of plant on Google street view, there appear to be coating towers. 8050 Victor Mendon Road
Victor, NY 14564

http://www.galaxywire.com/custom-wire-cable/jacket-insulation/tfe-tetrafluoroethylene/

Galaxy Wire & Cable, Inc.
903 Sheehy Drive
Suite E
Horsham, PA 19044
Phone: 215.957.8714
Fax: 215.957.8717
Email: sales@galaxywire.com

https://www.google.com/maps/@41.0640972,-81.4295884,3a,21y,230.1h,85.31t/data=!3m6!1e1!3m4!1sqHcwajp3v0cqVCBO5B7RBw!2e0!7i13312!8i6656 St Gobain plant. 2664 Gilchrist Rd, Akron, OH . towers?