Custom Stack Analysis, LLC.

1-800-824-4274

Essroc San Juan
Carr. #2 KM. 26 BO Espionosa
Dorado, Puerto Rico 00646

Report

Performed Velocity, Moisture, Temperature, Volumetric Flow Rate, Relative Accuracy Testing for Oxygen, Sulfur Dioxide, Nitrogen Oxide, Carbon Monoxide and Carbon Dioxide Emissions Testing

Sampling performed on the Baghouse #2 Outlet

Dorado, Puerto Rico

Test Date: 5/9/13

Essroc San Juan
Carr. #2 KM. 26 BO Espionosa
Dorado, Puerto Rico 00646

Report

Performed Velocity, Moisture, Temperature, Volumetric Flow Rate, Relative Accuracy Testing for Oxygen, Sulfur Dioxide, Nitrogen Oxide, Carbon Monoxide and Carbon Dioxide Emissions Testing

Sampling performed on the Baghouse #2 Outlet

Dorado, Puerto Rico

Test Date: 5/9/13

James K. Gray
Custom Stack Analysis, LLC.

REPORT CERTIFICATION

Custom Stack Analysis, LLC. has used its professional experience and best professional efforts in performing this compliance test. I have reviewed the results of these tests and to the best of my knowledge and belief they are true and correct.

James K. Gray

Custom Stack Analysis, LLC. P. O. Box 3750 14614 Cenfield St NE Alliance, Ohio 44601 Phone: 330-525-5119 Fax: 330-525-7908 E-mail: stacks@customstackanalysis.com

TABLE OF CONTENTS

Executive Summary	.....	1
Test Results	.....	2-10
Methods Description	.....	11-16
Sampling Train Diagrams	.....	17-21
Sampling Point Description	.....	22-23

APPENDIX

Test Data	.....	1
Laboratory Data	.....	2
Calibration Data	.....	3
CEMS Data	.....	4
Reference Method Data	.....	5

EXECUTIVE SUMMARY

Custom Stack Analysis, LLC. conducted emissions sampling using USEPA Methods 1-4, 3A, 6C, 7E and 10 for relative accuracy determination. Testing was conducted on the Baghouse #2 Outlet on May 9th, 2013 for compliance purposes. The Custom Stack Analysis, LLC. test crew consisted of Mr. James Gray, Mr. John Dunlap and Mr. Marc Fonner. The testing procedures were coordinated by Ms. Beatriz Rivera Mercado of Essroc Puerto Rico.

A description of the testing protocol is included on pages 11-16. Appendix 1 includes field test data. Appendix 2 contains laboratory data from Custom Stack Analysis, LLC. Appendix 3 contains calibration data for the equipment used on test day. Appendix 4 contains CEM data. Appendix 5 contains reference method data Test results are located on pages 2-10.

RESULTS SUMMARY

Essroc San Juan - 5/9/2013

Source Location		Baghouse #2 Outlet							
Instrument		SO2		NOX		CO	CO2	O2	Flows
Reference Method		6C	6C	7E	7E	10	3A	3A	2
RA Units		ppmv	lb/hr	ppmv	lb/hr	lb/hr	%	%	kscm
Analyzer Responses	RM	1.977	2.178	190.663	160.867	269.097	8.39	15.619	7713.864
	CEM	2.089	2.211	192.822	157.478	256.878	8.237	15.718	6850.667
Mean Difference (Absolute Value)		-0.111	-0.033	-2.159	3.389	12.219	0.154	-0.098	863.198
Confidence Coefficient (CC)		0.213	0.039	4.007	8.059	9.11	1.025	0.188	289.934
Percent Relative Accuracy (RA) (% of Reference Method)		16.42	3.3	3.23	7.12	7.93	14.05	1.83	14.95
Required RA		20% of RM	20% of RM	20% of RM	20% of RM	10% of RM	20% of RM	20% of RM	20% of RM
Performance Bias		PASS	PASS	PASS	PASS	PASS	PASS	PASS	PASS

Custom Stack Analysis, LLC. P. O. Box 3750 14614 Cenfield St NE Alliance, Ohio 44601 Phone: 330-525-5119 Fax: 330-525-7908 E-mail: stacks@customstackanalysis.com

Custom Stack Analysis, LLC.

Essroc San Juan: Baghouse #2 Outlet Unit Kiln
Relative Accuracy Test Audit
Relative Accuracy Calculations and Results
SO2 (A) Primary
5/9/2013

		SO2 (A) Primary			
Use	Run	RM	CEMS	Difference	
Y	1	16.954	17.800	-0.846	-4.99%
Y	2	-0.090	-0.100	0.010	
Y	3	-0.090	-0.100	0.010	
Y	4	-0.090	-0.100	0.010	
Y	5	0.581	0.600	-0.019	-3.19%
Y	6	-0.090	0.000	-0.090	
Y	7	0.854	0.900	-0.046	-5.44%
Y	8	-0.090	-0.100	0.010	
Y	9	-0.141	-0.100	-0.041	
N	10	-0.191	-0.200	0.009	
Averages		1.977	2.089	-0.111	

Standard Deviation	0.278
Confidence Coefficient	0.213
Relative Accuracy	16.42

Custom Stack Analysis, LLC. P. O. Box 3750 14614 Cenfield St NE Alliance, Ohio 44601 Phone: 330-525-5119 Fax: 330-525-7908 E-mail: stacks@customstackanalysis.com

Custom Stack Analysis, LLC.

Essroc San Juan: Baghouse #2 Outlet Unit Kiln
Relative Accuracy Test Audit
Relative Accuracy Calculations and Results
SO2 lb/Hr (A) Primary
5/9/2013

		SO2 lb/Hr (A) Primary			
Use	Run	RM	CEMS	Difference	
Y	1	18.587	18.700	-0.113	-0.61%
Y	2	-0.098	-0.100	0.002	
Y	3	-0.107	-0.100	-0.007	
Y	4	-0.108	-0.100	-0.008	
Y	5	0.691	0.700	-0.009	-1.31%
Y	6	-0.107	0.000	-0.107	
Y	7	1.022	1.000	0.022	2.20%
Y	8	-0.107	-0.100	-0.007	
Y	9	-0.172	-0.100	-0.072	
N	10	-0.232	-0.100	-0.132	
Averages		2.178	2.211	-0.033	

Standard Deviation	0.050
Confidence Coefficient	0.039
Relative Accuracy	3.30

Custom Stack Analysis, LLC. P. O. Box 3750 14614 Cenfield St NE Alliance, Ohio 44601 Phone: 330-525-5119 Fax: 330-525-7908 E-mail: stacks@customstackanalysis.com

Custom Stack Analysis, LLC.

Essroc San Juan: Baghouse #2 Outlet Unit Kiln
Relative Accuracy Test Audit
Relative Accuracy Calculations and Results
NOx (A) Primary
5/9/2013

Use	Run	NOx(A) RM	NOx(A) CEMS	Difference	
Y	1	202.180	209.100	-6.920	-3.42%
Y	2	171.152	180.200	-9.048	-5.29%
Y	3	168.183	165.000	3.183	1.89%
Y	4	172.930	171.700	1.230	0.71%
Y	5	190.350	196.600	-6.250	-3.28%
Y	6	203.500	207.500	-4.000	-1.97%
Y	7	210.761	215.700	-4.939	-2.34%
Y	8	192.686	186.600	6.086	3.16%
Y	9	204.224	203.000	1.224	0.60%
N	10	192.044	195.900	-3.856	-2.01%
Averages		190.663	192.822	-2.159	

Standard Deviation	5.213
Confidence Coefficient	4.007
Relative Accuracy	3.23

Custom Stack Analysis, LLC. P. O. Box 3750 14614 Cenfield St NE Alliance, Ohio 44601 Phone: 330-525-5119 Fax: 330-525-7908 E-mail: stacks@customstackanalysis.com

Custom Stack Analysis, LLC.

Essroc San Juan: Baghouse #2 Outlet Unit Kiln
Relative Accuracy Test Audit
Relative Accuracy Calculations and Results
Nox lb/Hr (A) Primary
5/9/2013

Use	Run	Nox lb/Hr (A) RM	CEMS	Difference	
Y	1	159.427	161.000	-1.573	-0.99%
Y	2	134.500	155.100	-20.600	-15.32%
Y	3	142.932	138.300	4.632	3.24%
Y	4	149.550	138.400	11.150	7.46%
Y	5	162.700	159.500	3.200	1.97%
Y	6	173.681	173.600	0.081	0.05%
Y	7	181.597	173.700	7.897	4.35%
Y	8	164.507	153.500	11.007	6.69%
Y	9	178.908	164.200	14.708	8.22%
N	10	167.755	156.500	11.255	6.71%
Averages		160.867	157.478	3.389	

Standard Deviation	10.484
Confidence Coefficient	8.059
Relative Accuracy	7.12

Custom Stack Analysis, LLC. P. O. Box 3750 14614 Cenfield St NE Alliance, Ohio 44601 Phone: 330-525-5119 Fax: 330-525-7908 E-mail: stacks@customstackanalysis.com

Custom Stack Analysis, LLC.

Essroc San Juan: Baghouse #2 Outlet Unit Kiln
Relative Accuracy Test Audit
Relative Accuracy Calculations and Results
CO2 (A) Primary
5/9/2013

Use	Run	CO2 (A) Primary RM	CEMS	Difference	
Y	1	9.200	9.210	-0.010	-0.11%
Y	2	10.546	8.110	2.436	23.10%
Y	3	10.674	8.190	2.484	23.27%
Y	4	7.460	8.200	-0.740	-9.92%
Y	5	7.574	8.210	-0.636	-8.40%
Y	6	7.537	7.690	-0.153	-2.03%
Y	7	7.415	8.150	-0.735	-9.92%
Y	8	7.435	8.170	-0.735	-9.89%
Y	9	7.671	8.200	-0.529	-6.89%
N	10	7.766	8.470	-0.704	-9.07%
Averages		8.390	8.237	0.154	

Standard Deviation	1.334
Confidence Coefficient	1.025
Relative Accuracy	14.05

Custom Stack Analysis, LLC. P. O. Box 3750 14614 Cenfield St NE Alliance, Ohio 44601 Phone: 330-525-5119 Fax: 330-525-7908 E-mail: stacks@customstackanalysis.com

Custom Stack Analysis, LLC.

Essroc San Juan: Baghouse #2 Outlet Unit Kiln
Relative Accuracy Test Audit
Relative Accuracy Calculations and Results
O2 (A) Primary
5/9/2013

		O2 (A) Primary			
Use	Run	RM	CEMS	Difference	
Y	1	15.520	15.100	0.420	2.71%
Y	2	15.380	15.760	-0.380	-2.47%
Y	3	15.580	15.800	-0.220	-1.41%
Y	4	15.420	15.680	-0.260	-1.69%
Y	5	15.724	15.670	0.054	0.34%
Y	6	15.769	16.060	-0.291	-1.84%
Y	7	15.830	15.770	0.060	0.38%
Y	8	15.677	15.830	-0.153	-0.97%
Y	9	15.674	15.790	-0.116	-0.74%
N	10	15.825	15.640	0.185	1.17%
Averages		15.619	15.718	-0.098	

Standard Deviation	0.244
Confidence Coefficient	0.188
Relative Accuracy	1.83

Custom Stack Analysis, LLC. P. O. Box 3750 14614 Cenfield St NE Alliance, Ohio 44601 Phone: 330-525-5119 Fax: 330-525-7908 E-mail: stacks@customstackanalysis.com

Custom Stack Analysis, LLC.

Essroc San Juan: Baghouse #2 Outlet Unit Kiln
Relative Accuracy Test Audit
Relative Accuracy Calculations and Results
Co lb/Hr (A) Primary
5/9/2013

Use	Run	Co lb/Hr (A) RM	CEMS	Difference	
Y	1	150.443	142.000	8.443	5.61%
Y	2	153.630	164.800	-11.170	-7.27%
Y	3	240.112	236.800	3.312	1.38%
Y	4	327.052	302.600	24.452	7.48%
Y	5	323.378	305.600	17.778	5.50%
Y	6	239.480	232.400	7.080	2.96%
Y	7	277.706	259.700	18.006	6.48%
Y	8	381.834	367.400	14.434	3.78%
Y	9	328.237	300.600	27.637	8.42%
N	10	197.843	179.400	18.443	9.32%
Averages		269.097	256.878	12.219	

Standard Deviation	11.852
Confidence Coefficient	9.110
Relative Accuracy	7.93

Custom Stack Analysis, LLC. P. O. Box 3750 14614 Cenfield St NE Alliance, Ohio 44601 Phone: 330-525-5119 Fax: 330-525-7908 E-mail: stacks@customstackanalysis.com

Custom Stack Analysis, LLC.

Essroc San Juan: Baghouse #2 Outlet Unit Kiln
Relative Accuracy Test Audit
Relative Accuracy Calculations and Results
Flow
5/9/2013

Use	Run	Flow RM	Flow CEMS	Difference	
Y	1	7216.898	6450.000	766.898	10.63%
Y	2	7192.275	7218.000	-25.725	-0.36%
Y	3	7761.245	7026.000	735.245	9.47%
Y	4	7897.712	6756.000	1141.712	14.46%
Y	5	7826.322	6804.000	1022.322	13.06%
Y	6	7814.657	6990.000	824.657	10.55%
Y	7	7889.109	6744.000	1145.109	14.52%
Y	8	7817.087	6888.000	929.087	11.89%
Y	9	8009.475	6780.000	1229.475	15.35%
N	10	7986.511	6690.000	1296.511	16.23%
Averages		7713.864	6850.667	863.198	

Standard Deviation	377.190
Confidence Coefficient	289.934
Relative Accuracy	14.95

METHOD 1

Sample and velocity traverses for stationary sources.

To aid in the representative measurement of pollutant emissions and/ or total volumetric flow rate from a stationary source, a measurement site where the effluent stream is flowing in a known direction is selected, and the cross-section of the stack is divided into a number of equal areas. A traverse point is then located within each of these equal areas.

METHOD 2

Determination of stack gas velocity and volumetric flow rate.

The average gas velocity in a stack is determined from the gas density and from measurement of the average velocity head with a Type S (Stausscheibe or reverse type) pitot tube.

METHOD 3

Gas analysis for the determination of dry molecular weight.

This method is applicable for determining carbon dioxide and oxygen concentrations and dry molecular weight of a sample from a gas stream of a fossil-fuel combustion process.

METHOD 4

Determination of moisture content in stack gases.

A gas sample is extracted at a constant rate from the source. It is determined either volumetrically or gravimetrically.

METHOD 3A TESTING DESCRIPTION

A gas sample is continuously extracted from the stack, and a portion of the sample is conveyed to an instrumental analyzer for determination of O2 gas concentration. The gases pass through a heated sampling probe and filter to prevent condensation. The gases then pass through a calibration valve to a heated sampling line. After the heated sampling line is a Universal Analyzers Model 530 air cooled single sample thermoelectric water condenser with a perostolic pump for moisture removal. The sample is then passed through to a California Analytical Instruments Model 100F for O2 concentrations. Before the testing procedures commence the analyzer is left to warm up for a 90 minute period. It is then calibrated according to Method 7E specifications. To the extent practicable, the measured emissions should be between 20 to 100 percent of the selected calibration span. Three calibration gases are selected. The High-Level gas concentrations shall be equivalent to 20 to 100 percent of the calibration span. Mid-Level concentrations shall be equivalent to 40 to 60 percent of the calibration span. The Low-Level Gas concentrations of less than 20 percent of the span. Before the first run an analyzer calibration error check is conducted. If the low-level, mid, or high cal gases expected concentrations differ by more than +-2% of the span then the procedure needs to be repeated until an acceptable 3 point calibration is obtained. After the analyzer calibration check the upscale and low level calibration gases are introduced to the sampling calibration valve and recorded. System bias calibration must be within 5.0% of the analyzer calibration span for low-scale and upscale calibration gases. At the conclusion of each of the test runs the low-level gas and an upscale gas closest to the concentrations are introduced to the calibration valve assembly. If either the low-level or upscale value exceeds +-3% of the span, then the run is considered invalid.

METHOD 6C TESTING DESCRIPTION

A gas sample is continuously extracted from the stack, and a portion of the sample is conveyed to an instrumental analyzer for determination of SO2 gas concentration using a flourescence analyzer. The gases pass through a heated sampling probe and filter to prevent condensation. The gases then pass through a calibration valve to a heated sampling line. After the heated sampling line is a Universal Analyzers Model 530 air cooled single sample thermoelectric water condenser with a perostolic pump for moisture removal. The sample is then passed through to a Thermo Environmental Instruments Model 43C pulsed flourescent source So2 analyzer where the gases are analyzed for SO2 concentrations. Before the testing procedures commence the analyzer is left to warm up for a 90 minute period. It is then calibrated according to Method 7E specifications. To the extent practicable, the measured emissions should be between 20 to 100 percent of the selected calibration span. Three calibration gases are selected. The High-Level gas concentrations shall be equivalent to 20 to 100 percent of the calibration span. Mid-Level concentrations shall be equivalent to 40 to 60 percent of the calibration span. The Low-Level Gas concentrations of less than 20 percent of the span. Before the first run an analyzer calibration error check is conducted. If the low-level, mid, or high cal gases expected concentrations differ by more than +-2% of the span then the procedure needs to be repeated until an acceptable 3 point calibration is obtained. After the analyzer calibration check the upscale and low level calibration gases are introduced to the sampling calibration valve and recorded. System bias calibration must be within 5.0% of the analyzer calibration span for low-scale and upscale calibration gases. At the conclusion of each of the test runs the low-level gas and an upscale gas closest to the concentrations are introduced to the calibration valve assembly. If either the low-level or upscale value exceeds +-3% of the span, then the run is considered invalid.

METHOD 7E TESTING DESCRIPTION

A gas sample is continuously extracted from the stack, and a portion of the sample is conveyed to an instrumental analyzer for determination of NOx gas concentration using a chemiluminescence analyzer. The gases pass through a heated sampling probe and filter to prevent condensation. The gases then pass through a calibration valve to a heated sampling line. After the heated sampling line is a condenser for moisture removal. The sample is then passed through to a Thermo Environmental Instruments Model 42 chemiluminescence analyzer where the gases are analyzed for NOx concentrations. Before the testing procedures commence the analyzer is left to warm up for a 90 minute period. It is then calibrated according to Method 7E specifications. To the extent practicable, the measured emissions should be between 20 to 100 percent of the selected calibration span. Three calibration gases are selected. The High-Level gas concentrations shall be equivalent to 20 to 100 percent of the calibration span. Mid-Level concentrations shall be equivalent to 40 to 60 percent of the calibration span. The Low-Level Gas concentrations of less than 20 percent of the span. Before the first run an analyzer calibration error check is conducted. If the low-level, mid, or high cal gases expected concentrations differ by more than +-2% of the span then the procedure needs to be repeated until an acceptable 3 point calibration is obtained. After the analyzer calibration check the upscale and low level calibration gases are introduced to the sampling calibration valve and recorded. System bias calibration must be within 5.0% of the analyzer calibration span for low-scale and upscale calibration gases. At the conclusion of each of the test runs the low-level gas and an upscale gas closest to the concentrations are introduced to the calibration valve assembly. If either the low-level or upscale value exceeds +-3% of the span, then the run is considered invalid.

METHOD 10 TESTING DESCRIPTION

A gas sample is continuously extracted from the stack, and a portion of the sample is conveyed to an instrumental analyzer for determination of CO gas concentration using a Luft-type nondispersive infrared analyzer. The gases pass through a heated sampling probe and filter to prevent condensation. The gases then pass through a calibration valve to a heated sampling line. After the heated sampling line is a Universal Analyzers Model 530 air cooled single sample thermoelectric water condenser with a perostolic pump for moisture removal. The sample is then passed through an ascarite tube to a Thermo Environmental Instruments Model 48 Luft-type analyzer where the gases are analyzed for CO concentrations. Before the testing procedures commence the analyzer is left to warm up for a 90 minute period. It is then calibrated according to Method 7E specifications. To the extent practicable, the measured emissions should be between 20 to 100 percent of the selected calibration span. Three calibration gases are selected. The High-Level gas concentrations shall be equivalent to 20 to 100 percent of the calibration span. Mid-Level concentrations shall be equivalent to 40 to 60 percent of the calibration span. The Low-Level Gas concentrations of less than 20 percent of the span. Before the first run an analyzer calibration error check is conducted. If the low-level, mid, or high cal gases expected concentrations differ by more than +-2% of the span then the procedure needs to be repeated until an acceptable 3 point calibration is obtained. After the analyzer calibration check the upscale and low level calibration gases are introduced to the sampling calibration valve and recorded. System bias calibration must be within 5.0% of the analyzer calibration span for low-scale and upscale calibration gases. At the conclusion of each of the test runs the low-level gas and an upscale gas closest to the concentrations are introduced to the calibration valve assembly. If either the low-level or upscale value exceeds +-3% of the span, then the run is considered invalid.

RELATIVE ACCURACY TEST DESCRIPTION

The relative accuracy test is conducted to determine if a CEM system will give data (within the specified limits) that can be compared with data obtained using the compliance test methods (the US EPA reference methods of 40 CFR 60 Appendix A). The reference method *sampling* points are different than those specified for the CEM system. The sampling points are placed at the following percents across the stack. Point 1 is 16.7 %, point 2 is 50%, point 3 is 83.3%. The reference method *sampling locations* are the same as those specified for the CEM system, which are at least two equivalent diameters downstream from a control device and one-half and equivalent diameter upstream from the effluent exhaust or control device. The principal sampling strategy for the relative accuracy test is to take CEM readings and reference method samples at the same time. The relative accuracy is determined by dividing the absolute value of the mean difference between the reference method data and the CEM system data plus a confidence coefficient [CC] by either the average reference method value or applicable standard as follows:

Relative accuracy

$$\bullet \frac{\text{arithmetic mean of difference + confidence coefficient}}{\text{mean of reference method values (or applicable standard)}} 100$$

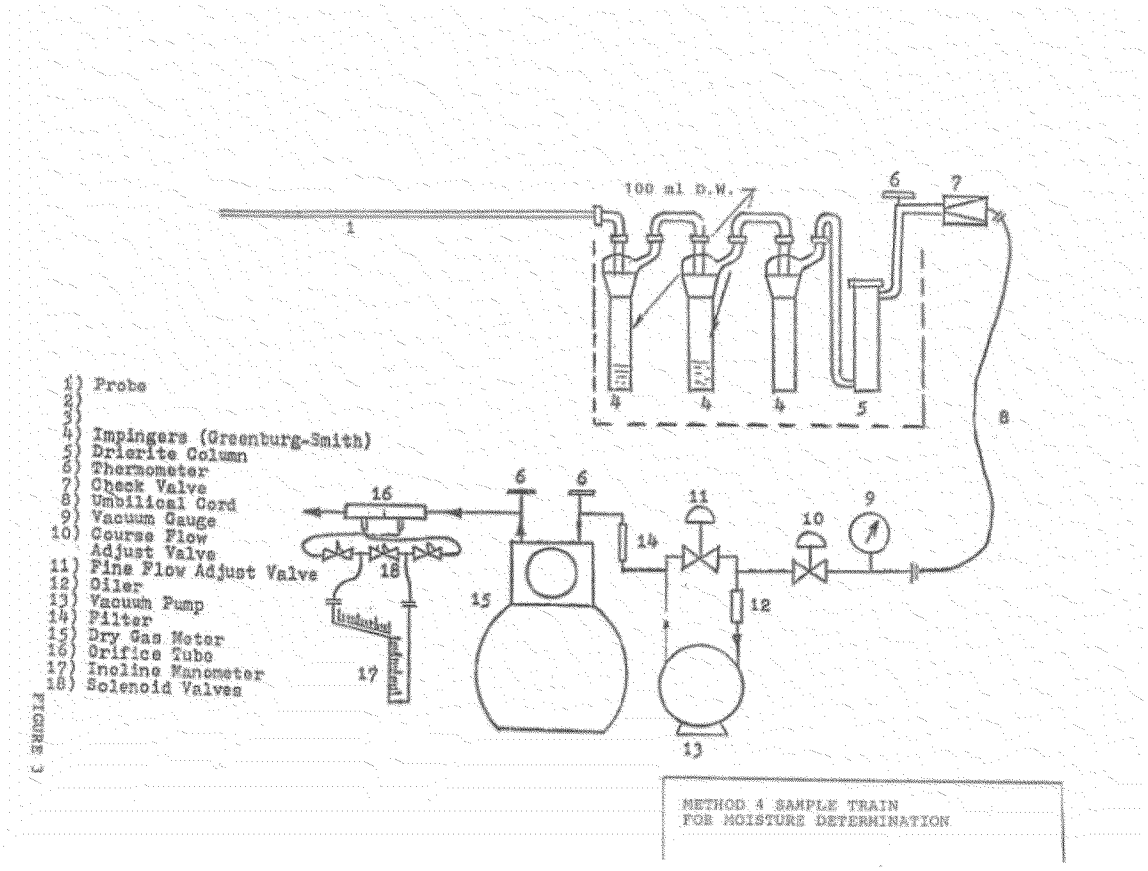
100 ml D.W.
1) Probe
2)
3)
4) Impingers (Greenburg-Smith)
5) Drierite Column
6) Thermometer
7) Check Valve
8) Umbilical Cord
9) Vacuum Gauge
10) Course Flow Adjust Valve
11) Fine Flow Adjust Valve
12) Oiler
13) Vacuum Pump
14) Filter
15) Dry Gas Meter
16) Orifice Tube
17) Incline Manometer
18) Solenoid Valves
METHOD 4 SAMPLE TRAIN
FOR MOISTURE DETERMINATION

FIGURE 3

3A Sampling System

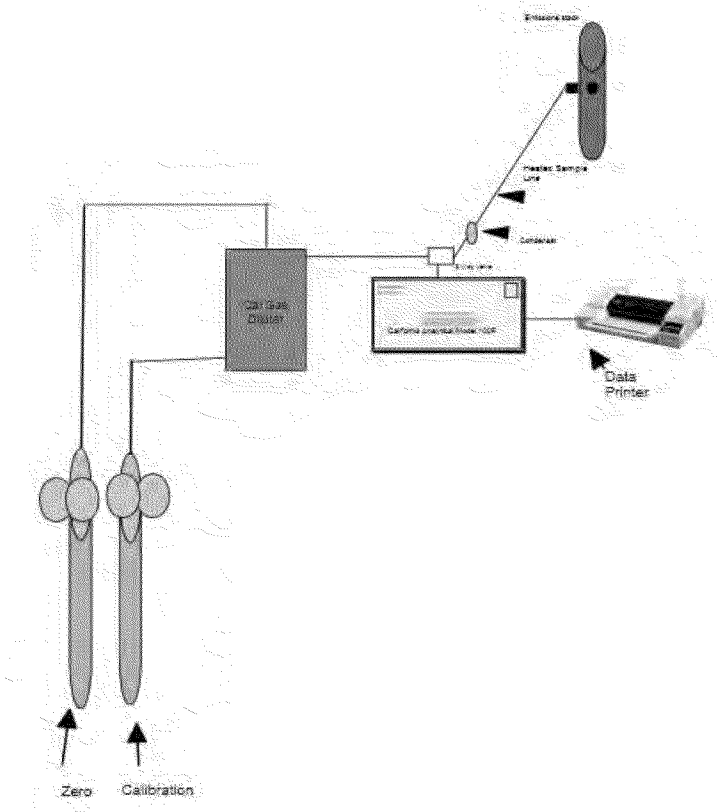

6C Sampling System

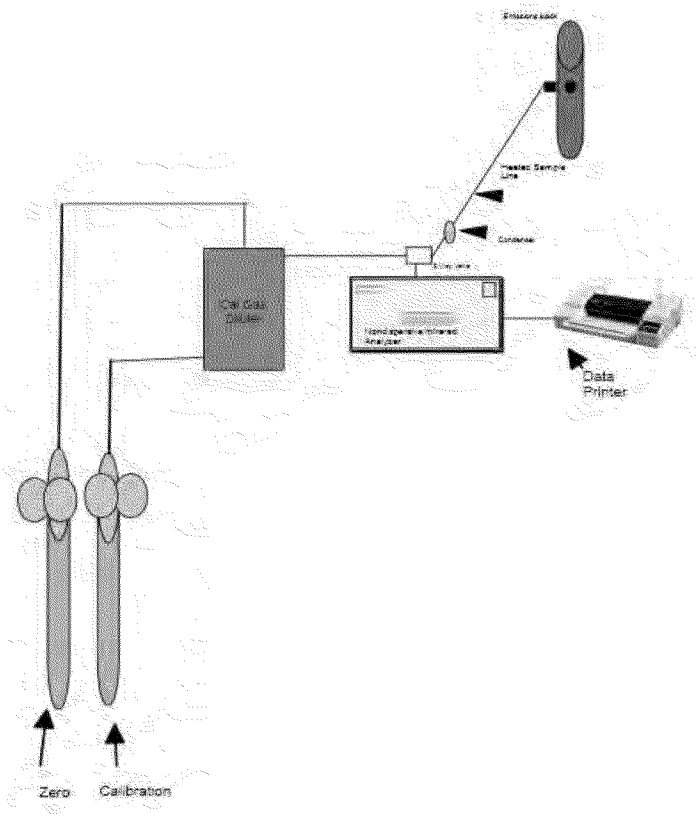

7E Sampling System

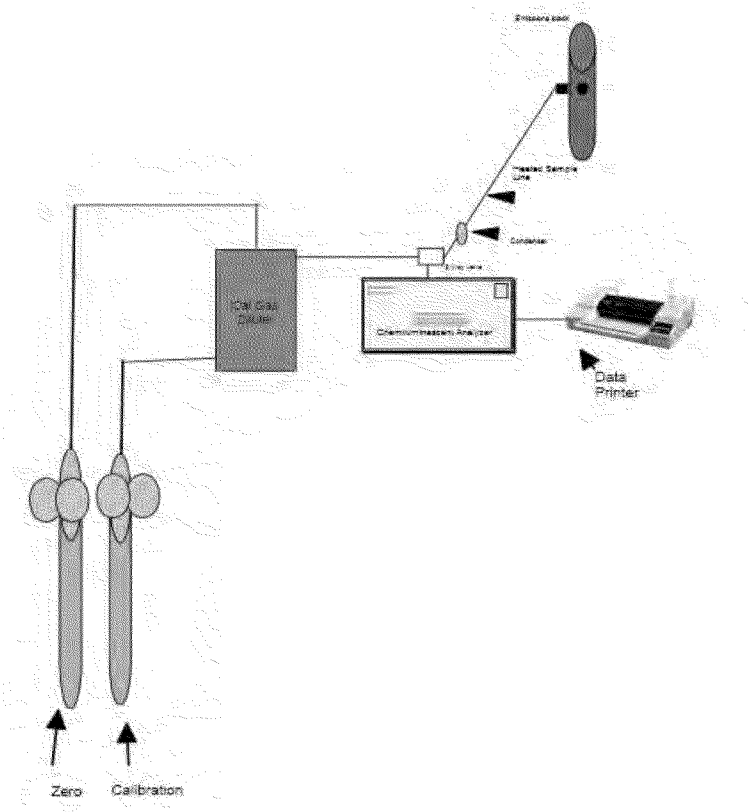

10 Sampling System

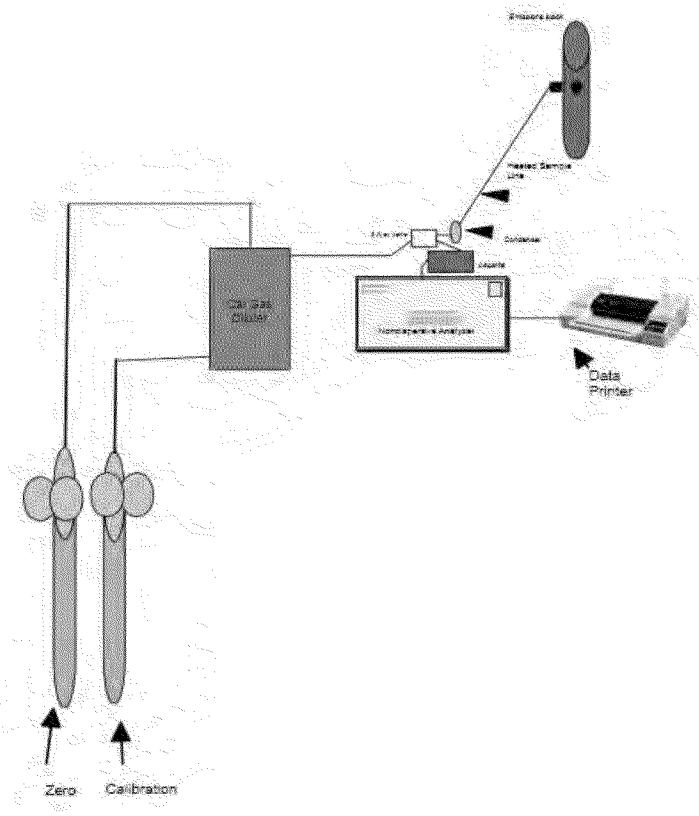

Location of Sampling Points

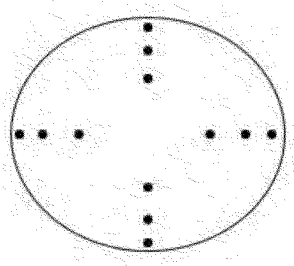

Location:	Outlet	
Upstream	.5 Dia.	
Downstream	4 Dia.	
Stack Diameter	87.5	Inches
Sample Point #		
1	1.8	Inches
2	5.9	
3	10.3	
4	15.5	
5	21.9	
6	31.2	

Location of Sampling Points

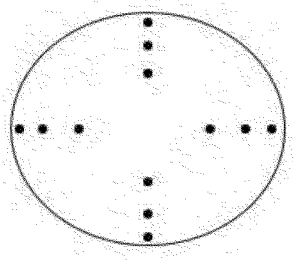

Location:	Outlet	RATA
Upstream	.5 Dia.	
Downstream	4 Dia.	
Stack Diameter	87.5	Inches
Sample Point #		
1	14.6	Inches
2	43.75	
3	72.9	

Appendix #1

Test Data

Field RATA Generation Program
Custom Stack Analysis, LLC.

CLIENT:	**Essroc San Juan**	RM Basis:	Dry
TEST SITE:	**Baghouse #2 Outlet**	CEM Basis:	Dry
UNIT NO.:	**Kiln**	BASIS:	O2
JOB # :		LOAD:	
START DATE:	**05/09/13**	RUNS:	**12**
Probe Number:	TP 10-3	Start Time:	
Pitot Coefficient:	0.84	Duration (mins):	**20**
Station Barometric Pressure:	**29.05**	Interval (mins):	**20**
Fuel Type:	Gas: Natural	FileName:	A:
Area of the Flue (sq.ft.):	**41.76**		
Operator:	JG, JD, MF		

Checkpoints

RM Basis	Dry
CEM Basis	Dry
Test Basis	O2
F-Factor	8710
Probe	TP 10-3

Essroc San Juan

Essroc San Juan: Baghouse #2 Outlet Unit Kiln
Relative Accuracy Test Audit
Relative Accuracy Calculations and Results
CEMS Data Input

Run	Start Time	Stop Time	ppm SO2(A)	lb/mmBtu SO2(A)	lb/Hr SO2(A)	ppm NOx(A)	lb/mmBtu NOx(A)	lb/Hr Nox (A)	ppm CO(A)	lb/mmBtu CO(A)	lb/hr CO(A)	% CO2(A)	% O2(A)	KSCFH Flow (A)	MW
1	18:00	18:20	17.80		18.70	209.10		161.00			142.000	9.210	15.100	6450.000	
2	18:40	19:00	-0.10		-0.10	180.20		155.10			164.800	8.110	15.760	7218.000	
3	19:23	19:43	-0.10		-0.10	165.00		138.30			236.800	8.190	15.800	7026.000	
4	20:05	20:25	-0.10		-0.10	171.70		138.40			302.600	8.200	15.680	6756.000	
5	20:49	21:09	0.60		0.70	196.60		159.50			305.600	8.210	15.670	6804.000	
6	21:32	21:52	0.00		0.00	207.50		173.60			232.400	7.690	16.060	6990.000	
7	22:16	22:36	0.90		1.00	215.70		173.70			259.700	8.150	15.770	6744.000	
8	23:00	23:20	-0.10		-0.10	186.60		153.50			367.400	8.170	15.830	6888.000	
9	23:42	0:02	-0.10		-0.10	203.00		164.20			300.600	8.200	15.790	6780.000	
10	0:26	0:46	-0.200		-0.100	195.900		156.500			179.400	8.470	15.640	6690.000	

Custom Stack Analysis, LLC.

Sampling System Bias Check and Measured Value Correction

Essroc San Juan
Baghouse #2 Outlet - Unit Kiln

Date: 5/9/2013
Pollutant: SO2
Monitor Span: 250

Run Number	Average Measured Value	Initial Zero Gas Bias	Final Zero Gas Bias	Zero Gas Drift	Initial Upscale Gas Bias	Final Upscale Gas Bias	Upscale Gas Drift	Calibration Gas Percent	Percent Moisture	Corrected Value, Dry Basis	Corrected Value, Wet Basis	
1	17.04	0.10	0.10	0.00	59.90	59.80	-0.04	59.80	8.49	16.95	15.51	0.055064
2	0.01	0.10	0.10	0.00	59.80	59.80	0.00	59.80	8.49	-0.09	-0.08	-0.00026
3	0.01	0.10	0.10	0.00	59.80	59.80	0.00	59.80	8.29	-0.09	-0.08	-0.00025
4	0.01	0.10	0.10	0.00	59.80	59.80	0.00	59.80	8.29	-0.09	-0.08	-0.00036
5	0.68	0.10	0.10	0.00	59.80	59.70	-0.04	59.80	8.53	0.58	0.53	0.002294
6	0.01	0.10	0.10	0.00	59.70	59.70	0.00	59.80	8.53	-0.09	-0.08	-0.00036
7	0.95	0.10	0.10	0.00	59.70	59.60	-0.04	59.80	8.53	0.85	0.78	0.00344
8	0.01	0.10	0.10	0.00	59.60	59.60	0.00	59.80	8.53	-0.09	-0.08	-0.00036
9	0.01	0.10	0.20	0.04	59.60	59.60	0.00	59.80	8.40	-0.14	-0.13	-0.00055
10	0.01	0.20	0.20	0.00	59.60	59.60	0.00	59.80	8.40	-0.19	-0.18	-0.00074
11		0.20		#VALUE!	59.60		#VALUE!	59.80	#VALUE!	#VALUE!	#VALUE!	#VALUE!
12				#VALUE!			#VALUE!	59.80	#VALUE!	#VALUE!	#VALUE!	#VALUE!

Cgas = (Cavg - Co) * Cma / (Cm - Co) Eq. 6C-1

where:
Cgas = Effluent gas concentration, dry basis, ppm
Cavg = Average gas concentraiton indicated by gas analyzer, dry basis, ppm
Co = Average of initial and final system calibration bias check responses for the zero gas, ppm
Cm = Average of initial and final system calibration bias check responses for the upscale calibration gas, ppm
Cma = Actual concentration of the upscale calibration gas, ppm

Client	Essroc San Juan	Test Date	5/9/2013
	Baghouse #2 Outlet	Project #	
Source Identification	Kiln	Operator	JG, JD, MF

Calibration Data For Sampling Runs: 1- Gas Type: So2 Span: 250	Cylinder Number	Cylinder Value % or PPM	Analyzer Response	Absolute Difference % or PPM	Difference % of Span	
Zero Gas		**0.00**	0.1	0.1	0.040	
Low-Range Gas				0	0	
Mid-Range Gas		**59.8**	59.8	0	0.000	
High-Range Gas		**134.0**	134	0	0.000	

Run #: 1 Gas Type: So2 Span: 250	Analyzer Response	Initial Values		Final Values		Drift % of Span
		System Response	System Cal. Bias % of Span	System Response	System Cal. Bias % of Span	
Zero Gas	0.1	0.1	0.00	0.1	0.00	0.00
Upscale Gas	59.8	59.9	0.04	59.8	0.00	-0.04

Run #: 2 Gas Type: So2 Span: 250	Analyzer Response	Initial Values		Final Values		Drift % of Span
		System Response	System Cal. Bias % of Span	System Response	System Cal. Bias % of Span	
Zero Gas	0.1	0.1	0.00	0.1	0.00	0.00
Upscale Gas	59.8	59.8	0.00	59.8	0.00	0.00

Run #: 3 Gas Type: So2 Span: 250	Analyzer Response	Initial Values		Final Values		Drift % of Span
		System Response	System Cal. Bias % of Span	System Response	System Cal. Bias % of Span	
Zero Gas	0.1	0.1	0.00	0.1	0.00	0.00
Upscale Gas	59.8	59.8	0.00	59.8	0.00	0.00

Run #: 4 Gas Type: So2 Span: 250	Analyzer Response	Initial Values		Final Values		Drift % of Span
		System Response	System Cal. Bias % of Span	System Response	System Cal. Bias % of Span	
Zero Gas	0.1	0.1	0.00	0.1	0.00	0.00
Upscale Gas	59.8	59.8	0.00	59.8	0.00	0.00

Client	Essroc San Juan	Test Date	5/9/2013
	Baghouse #2 Outlet	Project #	
Source Identification	Kiln	Operator	JG, JD, MF

Run #: 5		Initial Values		Final Values		
Gas Type: So2	Analyzer	System	System	System	System	
Span: 250	Response	Response	Cal. Bias % of Span	Response	Cal. Bias % of Span	Drift % of Span
Zero Gas	0.1	0.1	0.00	0.1	0.00	0.00
Upscale Gas	59.8	59.8	0.00	59.7	-0.04	-0.04

Run #: 6		Initial Values		Final Values		
Gas Type: So2	Analyzer	System	System	System	System	
Span: 250	Response	Response	Cal. Bias % of Span		Cal. Bias % of Span	Drift % of Span
Zero Gas	0.1	0.1	0.00	0.1	0.00	0.00
Upscale Gas	59.8	59.7	-0.04	59.7	-0.04	0.00

Run #: 7		Initial Values		Final Values		
Gas Type: So2	Analyzer	System	System	System	System	
Span: 250	Response	Response	Cal. Bias % of Span	Response	Cal. Bias % of Span	Drift % of Span
Zero Gas	0.1	0.1	0.00	0.1	0.00	0.00
Upscale Gas	59.8	59.7	-0.04	59.6	-0.08	-0.04

Run #: 8		Initial Values		Final Values		
Gas Type: So2	Analyzer	System	System	System	System	
Span: 250	Response	Response	Cal. Bias % of Span	Response	Cal. Bias % of Span	Drift % of Span
Zero Gas	0.1	0.1	0.00	0.1	0.00	0.00
Upscale Gas	59.8	59.6	-0.08	59.6	-0.08	0.00

Client	Essroc San Juan	Test Date	5/9/2013
	Baghouse #2 Outlet	Project #	
Source Identification	Kiln	Operator	JG, JD, MF

Run #: 9 Gas Type: So2 Span: 250	Analyzer Response	Initial Values		Final Values		Drift % of Span
		System Response	System Cal. Bias % of Span	System Response	System Cal. Bias % of Span	
Zero Gas	0.1	0.1	0.00	0.2	0.04	0.04
Upscale Gas	59.8	59.6	-0.08	59.6	-0.08	0.00

Run #: 10 Gas Type: So2 Span: 250	Analyzer Response	Initial Values		Final Values		Drift % of Span
		System Response	System Cal. Bias % of Span	System	System Cal. Bias % of Span	
Zero Gas	0.1	0.2	0.04	0.2	0.04	0.00
Upscale Gas	59.8	59.6	-0.08	59.6	-0.08	0.00

$$\text{System Calibration Bias} = \frac{\text{System Cal. Response} - \text{Analyzer Cal. Response}}{\text{Span}} \times 100$$

$$\text{Drift} = \frac{\text{Final System Cal. Response} - \text{Initial System Cal. Response}}{\text{Span}} \times 100$$

Custom Stack Analysis, LLC.

Sampling System Bias Check and Measured Value Correction

Essroc San Juan
Baghouse #2 Outlet - Unit Kiln

Date: 5/9/2013
Pollutant: CO2
Monitor Span: 25

Run Number	Average Measured Percent	Initial Zero Gas Bias	Final Zero Gas Bias	Zero Gas Drift	Initial Upscale Gas Bias	Final Upscale Gas Bias	Upscale Gas Drift	Calibration Gas Percent	Percent Moisture	Corrected Percent, Dry Basis	Corrected Percent, Wet Basis
1	9.20	0.00	0.00	0.00	11.90	11.90	0.00	11.90	8.49	9.20	8.42
2	7.45	0.00	0.10	0.40	11.90	4.90	-28.00	11.90	8.49	10.55	9.65
3	7.54	0.10	0.00	-0.40	4.90	11.90	28.00	11.90	8.29	10.67	9.79
4	7.46	0.00	0.00	0.00	11.90	11.90	0.00	11.90	8.29	7.46	6.84
5	7.56	0.00	0.10	0.40	11.90	11.80	-0.40	11.90	8.53	7.57	6.93
6	7.51	0.10	0.10	0.00	11.80	11.80	0.00	11.90	8.53	7.54	6.89
7	7.39	0.10	0.10	0.00	11.80	11.80	0.00	11.90	8.53	7.41	6.78
8	7.41	0.10	0.10	0.00	11.80	11.80	0.00	11.90	8.53	7.43	6.80
9	7.61	0.10	0.10	0.00	11.80	11.70	-0.40	11.90	8.40	7.67	7.03
10	7.67	0.10	0.10	0.00	11.70	11.70	0.00	11.90	8.40	7.77	7.11
11		0.10		#VALUE!	11.70		#VALUE!	11.90	#VALUE!	#VALUE!	#VALUE!
12				#VALUE!			#VALUE!	11.90	#VALUE!	#VALUE!	#VALUE!

Cgas = (Cavg - Co) * Cma / (Cm - Co) Eq. 6C-1

where:
Cgas = Effluent gas concentration, dry basis, ppm
Cavg = Average gas concentraiton indicated by gas analyzer, dry basis, ppm
Co = Average of initial and final system calibration bias check responses for the zero gas, ppm
Cm = Average of initial and final system calibration bias check responses for the upscale calibration gas, ppm
Cma = Actual concentration of the upscale calibration gas, ppm

Client	Essroc San Juan	Test Date	5/9/2013
	Baghouse #2 Outlet	Project #	
Source Identification	Kiln	Operator	JG, JD, MF

Calibration Data For Sampling Runs: 1- Gas Type: Co2 Span: 25	Cylinder Number	Cylinder Value % or PPM	Analyzer Response	Absolute Difference % or PPM	Difference % of Span	
Zero Gas		**0.00**	0	0	0.000	
Low-Range Gas				0	0	
Mid-Range Gas		**11.9**	11.9	0	0.000	
High-Range Gas		**20.8**	20.8	0	0.000	

Run #: 1 Gas Type: Co2 Span: 25	Analyzer Response	Initial Values		Final Values		Drift % of Span
		System Response	System Cal. Bias % of Span	System Response	System Cal. Bias % of Span	
Zero Gas	0	0	0.00	0	0.00	0.00
Upscale Gas	11.9	11.9	0.00	11.9	0.00	0.00

Run #: 2 Gas Type: Co2 Span: 25	Analyzer Response	Initial Values		Final Values		Drift % of Span
		System Response	System Cal. Bias % of Span	System Response	System Cal. Bias % of Span	
Zero Gas	0	0	0.00	0.1	0.40	0.40
Upscale Gas	11.9	11.9	0.00	4.9	-28.00	-28.00

Run #: 3 Gas Type: Co2 Span: 25	Analyzer Response	Initial Values		Final Values		Drift % of Span
		System Response	System Cal. Bias % of Span	System Response	System Cal. Bias % of Span	
Zero Gas	0	0.1	0.40	0	0.00	-0.40
Upscale Gas	11.9	4.9	-28.00	11.9	0.00	28.00

Run #: 4 Gas Type: Co2 Span: 25	Analyzer Response	Initial Values		Final Values		Drift % of Span
		System Response	System Cal. Bias % of Span	System Response	System Cal. Bias % of Span	
Zero Gas	0	0	0.00	0	0.00	0.00
Upscale Gas	11.9	11.9	0.00	11.9	0.00	0.00

Client	Essroc San Juan	Test Date	5/9/2013
	Baghouse #2 Outlet	Project #	
Source Identification	Kiln	Operator	JG, JD, MF

Run #: 5		Initial Values		Final Values		
Gas Type: Co2	Analyzer	System	System	System	System	
Span: 25	Response	Response	Cal. Bias % of Span	Response	Cal. Bias % of Span	Drift % of Span
Zero Gas	0	0	0.00	0.1	0.40	0.40
Upscale Gas	11.9	11.9	0.00	11.8	-0.40	-0.40

Run #: 6		Initial Values		Final Values		
Gas Type: Co2	Analyzer	System	System	System	System	
Span: 25	Response	Response	Cal. Bias % of Span		Cal. Bias % of Span	Drift % of Span
Zero Gas	0	0.1	0.40	0.1	0.40	0.00
Upscale Gas	11.9	11.8	-0.40	11.8	-0.40	0.00

Run #: 7		Initial Values		Final Values		
Gas Type: Co2	Analyzer	System	System	System	System	
Span: 25	Response	Response	Cal. Bias % of Span	Response	Cal. Bias % of Span	Drift % of Span
Zero Gas	0.0	0.1	0.40	0.1	0.40	0.00
Upscale Gas	11.9	11.8	-0.40	11.8	-0.40	0.00

Run #: 8		Initial Values		Final Values		
Gas Type: Co2	Analyzer	System	System	System	System	
Span: 25	Response	Response	Cal. Bias % of Span	Response	Cal. Bias % of Span	Drift % of Span
Zero Gas	0.0	0.1	0.40	0.1	0.40	0.00
Upscale Gas	11.9	11.8	-0.40	11.8	-0.40	0.00

Client	Essroc San Juan	Test Date	5/9/2013
	Baghouse #2 Outlet	Project #	
Source Identification	Kiln	Operator	JG, JD, MF

Run #: 9		Initial Values		Final Values		
Gas Type: Co2	Analyzer	System	System	System	System	
Span: 25	Response	Response	Cal. Bias % of Span	Response	Cal. Bias % of Span	Drift % of Span
Zero Gas	0	0.1	0.40	0.1	0.40	0.00
Upscale Gas	11.9	11.8	-0.40	11.7	-0.80	-0.40

Run #: 10		Initial Values		Final Values		
Gas Type: Co2	Analyzer	System	System	System	System	
Span: 25	Response	Response	Cal. Bias % of Span		Cal. Bias % of Span	Drift % of Span
Zero Gas	0	0.1	0.40	0.1	0.40	0.00
Upscale Gas	11.9	11.7	-0.80	11.7	-0.80	0.00

$$\text{System Calibration Bias} = \frac{\text{System Cal. Response - Analyzer Cal. Response}}{\text{Span}} \times 100$$

$$\text{Drift} = \frac{\text{Final System Cal. Response - Initial System Cal. Response}}{\text{Span}} \times 100$$

Custom Stack Analysis, LLC.

Sampling System Bias Check and Measured Value Correction

Essroc San Juan
Baghouse #2 Outlet - Unit Kiln

Date: 5/9/2013
Pollutant: NOx
Monitor Span: 1000

Run Number	Average Measured Value	Initial Zero Gas Bias	Final Zero Gas Bias	Zero Gas Drift	Initial Upscale Gas Bias	Final Upscale Gas Bias	Upscale Gas Drift	Calibration Gas Percent	Percent Moisture	Corrected Value, Dry Basis	Corrected Value, Wet Basis
1	202.08	0.20	0.20	0.00	302.80	302.70	-0.01	303.00	8.49	202.18	185.01
2	171.07	0.20	0.20	0.00	302.70	302.70	0.00	303.00	8.49	171.15	156.62
3	168.10	0.20	0.30	0.01	302.70	302.60	-0.01	303.00	8.29	168.18	154.24
4	172.83	0.30	0.30	0.00	302.60	302.60	0.00	303.00	8.29	172.93	158.59
5	190.21	0.30	0.30	0.00	302.60	302.60	0.00	303.00	8.53	190.35	174.11
6	203.33	0.30	0.30	0.00	302.60	302.60	0.00	303.00	8.53	203.50	186.14
7	210.52	0.30	0.40	0.01	302.60	302.40	-0.02	303.00	8.53	210.76	192.79
8	192.45	0.40	0.40	0.00	302.40	302.40	0.00	303.00	8.53	192.69	176.25
9	203.95	0.40	0.40	0.00	302.40	302.40	0.00	303.00	8.40	204.22	187.08
10	191.81	0.40	0.40	0.00	302.40	302.40	0.00	303.00	8.40	192.04	175.92
11		0.40		#VALUE!	302.40		#VALUE!	303.00	#VALUE!	#VALUE!	#VALUE!
12				#VALUE!			#VALUE!	303.00	#VALUE!	#VALUE!	#VALUE!

Cgas = (Cavg - Co) * Cma / (Cm - Co) Eq. 6C-1

where:
Cgas = Effluent gas concentration, drybasis, ppm
Cavg = Average gas concentraiton indicated by gas analyzer, dry basis, ppm
Co = Average of initial and final system calibration bias check responses for the zero gas, ppm
Cm = Average of initial and final system calibration bias check responses for the upscale calibration gas, ppm
Cma = Actual concentration of the upscale calibration gas, ppm

Client	Essroc San Juan	Test Date	5/9/2013
	Baghouse #2 Outlet	Project #	
Source Identification	Kiln	Operator	JG, JD, MF

Calibration Data For Sampling Runs: 1- Gas Type: Nox Span: 1000	Cylinder Number	Cylinder Value % or PPM	Analyzer Response	Absolute Difference % or PPM	Difference % of Span	
Zero Gas		**0**	0.1	0.1	0.010	
No2 to No Converter Check		**24.00**	24.2	0.2	100.83%	**PASS**
Mid-Range Gas		**303.0**	302.9	-0.1	-0.010	
High-Range Gas		**667.0**	666.9	-0.1	-0.010	

Run #: 1 Gas Type: Nox Span: 1000	Analyzer Response	Initial Values		Final Values		Drift % of Span
		System Response	System Cal. Bias % of Span	System Response	System Cal. Bias % of Span	
Zero Gas	0.1	0.2	0.01	0.2	0.01	0.00
Upscale Gas	302.9	302.8	-0.01	302.7	-0.02	-0.01

Run #: 2 Gas Type: Nox Span: 1000	Analyzer Response	Initial Values		Final Values		Drift % of Span
		System Response	System Cal. Bias % of Span	System Response	System Cal. Bias % of Span	
Zero Gas	0.1	0.2	0.01	0.2	0.01	0.00
Upscale Gas	302.9	302.7	-0.02	302.7	-0.02	0.00

Run #: 3 Gas Type: Nox Span: 1000	Analyzer Response	Initial Values		Final Values		Drift % of Span
		System Response	System Cal. Bias % of Span	System Response	System Cal. Bias % of Span	
Zero Gas	0.1	0.2	0.01	0.3	0.02	0.01
Upscale Gas	302.9	302.7	-0.02	302.6	-0.03	-0.01

Run #: 4 Gas Type: Nox Span: 1000	Analyzer Response	Initial Values		Final Values		Drift % of Span
		System Response	System Cal. Bias % of Span	System Response	System Cal. Bias % of Span	
Zero Gas	0.1	0.3	0.02	0.3	0.02	0.00
Upscale Gas	302.9	302.6	-0.03	302.6	-0.03	0.00

Client	Essroc San Juan	Test Date	5/9/2013
	Baghouse #2 Outlet	Project #	
Source Identification	Kiln	Operator	JG, JD, MF

Run #: 5		Initial Values		Final Values		
Gas Type: Nox Span: 1000	Analyzer Response	System Response	System Cal. Bias % of Span	System Response	System Cal. Bias % of Span	Drift % of Span
Zero Gas	0.1	0.3	0.02	0.3	0.02	0.00
Upscale Gas	302.9	302.6	-0.03	302.6	-0.03	0.00

Run #: 6		Initial Values		Final Values		
Gas Type: Nox Span: 1000	Analyzer Response	System Response	System Cal. Bias % of Span	System	System Cal. Bias % of Span	Drift % of Span
Zero Gas	0.1	0.3	0.02	0.3	0.02	0.00
Upscale Gas	302.9	302.6	-0.03	302.6	-0.03	0.00

Run #: 7		Initial Values		Final Values		
Gas Type: Nox Span: 1000	Analyzer Response	System Response	System Cal. Bias % of Span	System Response	System Cal. Bias % of Span	Drift % of Span
Zero Gas	0.1	0.3	0.02	0.4	0.03	0.01
Upscale Gas	302.9	302.6	-0.03	302.4	-0.05	-0.02

Run #: 8		Initial Values		Final Values		
Gas Type: Nox Span: 1000	Analyzer Response	System Response	System Cal. Bias % of Span	System Response	System Cal. Bias % of Span	Drift % of Span
Zero Gas	0.1	0.4	0.03	0.4	0.03	0.00
Upscale Gas	302.9	302.4	-0.05	302.4	-0.05	0.00

Client	Essroc San Juan	Test Date	5/9/2013
	Baghouse #2 Outlet	Project #	
Source Identification	Kiln	Operator	JG, JD, MF

Run #: 9 Gas Type: Nox Span: 1000	Analyzer Response	Initial Values		Final Values		Drift % of Span
		System Response	System Cal. Bias % of Span	System Response	System Cal. Bias % of Span	
Zero Gas	0.1	0.3	0.02	0.4	0.03	0.01
Upscale Gas	302.9	302.6	-0.03	302.4	-0.05	-0.02

Run #: 10 Gas Type: Nox Span: 1000	Analyzer Response	Initial Values		Final Values		Drift % of Span
		System Response	System Cal. Bias % of Span	System	System Cal. Bias % of Span	
Zero Gas	0.1	0.4	0.03	0.4	0.03	0.00
Upscale Gas	302.9	302.4	-0.05	302.4	-0.05	0.00

$$\text{System Calibration Bias} = \frac{\text{System Cal. Response - Analyzer Cal. Response}}{\text{Span}} \times 100$$

$$\text{Drift} = \frac{\text{Final System Cal. Response - Initial System Cal. Response}}{\text{Span}} \times 100$$

Custom Stack Analysis, LLC.

Sampling System Bias Check and Measured Value Correction

Essroc San Juan
Baghouse #2 Outlet - Unit Kiln

Date: 5/9/2013
Pollutant: O2
Monitor Span: 25

Run Number	Average Measured Percent	Initial Zero Gas Bias	Final Zero Gas Bias	Zero Gas Drift	Initial Upscale Gas Bias	Final Upscale Gas Bias	Upscale Gas Drift	Calibration Gas Percent	Percent Moisture	Corrected Percent, Dry Basis	Corrected Percent, Wet Basis
1	15.52	0.00	0.00	0.00	10.20	10.20	0.00	10.20	8.49	15.52	14.20
2	15.38	0.00	0.00	0.00	10.20	10.20	0.00	10.20	8.49	15.38	14.07
3	15.58	0.00	0.00	0.00	10.20	10.20	0.00	10.20	8.29	15.58	14.29
4	15.42	0.00	0.00	0.00	10.20	10.20	0.00	10.20	8.29	15.42	14.14
5	15.62	0.00	0.10	0.40	10.20	10.10	-0.40	10.20	8.53	15.72	14.38
6	15.56	0.10	0.10	0.00	10.10	10.10	0.00	10.20	8.53	15.77	14.42
7	15.62	0.10	0.10	0.00	10.10	10.10	0.00	10.20	8.53	15.83	14.48
8	15.47	0.10	0.10	0.00	10.10	10.10	0.00	10.20	8.53	15.68	14.34
9	15.39	0.10	0.10	0.00	10.10	10.00	-0.40	10.20	8.40	15.67	14.36
10	15.46	0.10	0.10	0.00	10.00	10.00	0.00	10.20	8.40	15.83	14.50
11		0.10		#VALUE!	10.00		#VALUE!	10.20	#VALUE!	#VALUE!	#VALUE!
12				#VALUE!			#VALUE!	10.20	#VALUE!	#VALUE!	#VALUE!

Cgas = (Cavg - Co) * Cma / (Cm - Co) Eq. 6C-1

where:
Cgas = Effluent gas concentration, dry basis, ppm
Cavg = Average gas concentraiton indicated by gas analyzer, dry basis, ppm
Co = Average of initial and final system calibration bias check responses for the zero gas, ppm
Cm = Average of initial and final system calibration bias check responses for the upscale calibration gas, ppm
Cma = Actual concentration of the upscale calibration gas, ppm

Client	Essroc San Juan	Test Date	5/9/2013
	Baghouse #2 Outlet	Project #	
Source Identification	Kiln	Operator	JG, JD, MF

Calibration Data For Sampling Runs: 1- Gas Type: O2 Span: 25	Cylinder Number	Cylinder Value % or PPM	Analyzer Response	Absolute Difference % or PPM	Difference % of Span	
Zero Gas		**0.00**	0	0	0.000	
Low-Range Gas				0	0	
Mid-Range Gas		**10.2**	10.2	0	0.000	
High-Range Gas		**21.2**	21.2	0	0.000	

Run #: 1 Gas Type: O2 Span: 25	Analyzer Response	Initial Values		Final Values		Drift % of Span
		System Response	System Cal. Bias % of Span	System Response	System Cal. Bias % of Span	
Zero Gas	0	0	0.00	0	0.00	0.00
Upscale Gas	10.2	10.2	0.00	10.2	0.00	0.00

Run #: 2 Gas Type: O2 Span: 25	Analyzer Response	Initial Values		Final Values		Drift % of Span
		System Response	System Cal. Bias % of Span	System Response	System Cal. Bias % of Span	
Zero Gas	0	0	0.00	0	0.00	0.00
Upscale Gas	10.2	10.2	0.00	10.2	0.00	0.00

Run #: 3 Gas Type: O2 Span: 25	Analyzer Response	Initial Values		Final Values		Drift % of Span
		System Response	System Cal. Bias % of Span	System Response	System Cal. Bias % of Span	
Zero Gas	0	0	0.00	0	0.00	0.00
Upscale Gas	10.2	10.2	0.00	10.2	0.00	0.00

Run #: 4 Gas Type: O2 Span: 25	Analyzer Response	Initial Values		Final Values		Drift % of Span
		System Response	System Cal. Bias % of Span	System Response	System Cal. Bias % of Span	
Zero Gas	0	0	0.00	0	0.00	0.00
Upscale Gas	10.2	10.2	0.00	10.2	0.00	0.00

Client	Essroc San Juan	Test Date	5/9/2013
	Baghouse #2 Outlet	Project #	
Source Identification	Kiln	Operator	JG, JD, MF

Run #: 5		Initial Values		Final Values		
Gas Type: O2 Span: 25	Analyzer Response	System Response	System Cal. Bias % of Span	System Response	System Cal. Bias % of Span	Drift % of Span
Zero Gas	0	0	0.00	0.1	0.40	0.40
Upscale Gas	10.2	10.2	0.00	10.1	-0.40	-0.40

Run #: 6		Initial Values		Final Values		
Gas Type: O2 Span: 25	Analyzer Response	System Response	System Cal. Bias % of Span	System	System Cal. Bias % of Span	Drift % of Span
Zero Gas	0	0.1	0.40	0.1	0.40	0.00
Upscale Gas	10.2	10.1	-0.40	10.1	-0.40	0.00

Run #: 7		Initial Values		Final Values		
Gas Type: O2 Span: 25	Analyzer Response	System Response	System Cal. Bias % of Span	System Response	System Cal. Bias % of Span	Drift % of Span
Zero Gas	0.0	0.1	0.40	0.1	0.40	0.00
Upscale Gas	10.2	10.1	-0.40	10.1	-0.40	0.00

Run #: 8		Initial Values		Final Values		
Gas Type: O2 Span: 25	Analyzer Response	System Response	System Cal. Bias % of Span	System Response	System Cal. Bias % of Span	Drift % of Span
Zero Gas	0.0	0.1	0.40	0.1	0.40	0.00
Upscale Gas	10.2	10.1	-0.40	10.1	-0.40	0.00

Client	Essroc San Juan	Test Date	5/9/2013
	Baghouse #2 Outlet	Project #	
Source Identification	Kiln	Operator	JG, JD, MF

Run #: 9		Initial Values		Final Values		
Gas Type: O2 Span: 25	Analyzer Response	System Response	System Cal. Bias % of Span	System Response	System Cal. Bias % of Span	Drift % of Span
Zero Gas	0	0.1	0.40	0.1	0.40	0.00
Upscale Gas	10.2	10.1	-0.40	10	-0.80	-0.40

Run #: 10		Initial Values		Final Values		
Gas Type: O2 Span: 25	Analyzer Response	System Response	System Cal. Bias % of Span	System	System Cal. Bias % of Span	Drift % of Span
Zero Gas	0	0.1	0.40	0.1	0.40	0.00
Upscale Gas	10.2	10	-0.80	10.0	-0.80	0.00

$$\text{System Calibration Bias} = \frac{\text{System Cal. Response - Analyzer Cal. Response}}{\text{Span}} \times 100$$

$$\text{Drift} = \frac{\text{Final System Cal. Response - Initial System Cal. Response}}{\text{Span}} \times 100$$

Custom Stack Analysis, LLC.

Sampling System Bias Check and Measured Value Correction

Essroc San Juan
Baghouse #2 Outlet - Unit Kiln

Date: 5/9/2013
Pollutant: CO
Monitor Span: 1000

Run Number	Average Measured Value	Initial Zero Gas Bias	Final Zero Gas Bias	Zero Gas Drift	Initial Upscale Gas Bias	Final Upscale Gas Bias	Upscale Gas Drift	Calibration Gas Percent	Percent Moisture	Corrected Value, Dry Basis	Corrected Value, Wet Basis
1	313.33	0.10	0.10	0.00	172.80	172.80	0.00	173.00	8.49	313.77	287.13
2	321.06	0.10	0.10	0.00	172.80	172.80	0.00	173.00	8.49	321.52	294.22
3	463.87	0.10	0.20	0.01	172.80	172.80	0.00	173.00	8.29	464.66	426.13
4	620.73	0.20	0.20	0.00	172.80	172.80	0.00	173.00	8.29	621.97	570.40
5	620.98	0.20	0.20	0.00	172.80	172.80	0.00	173.00	8.53	622.22	569.14
6	460.61	0.20	0.20	0.00	172.80	172.80	0.00	173.00	8.53	461.48	422.11
7	528.79	0.20	0.30	0.01	172.80	172.70	-0.01	173.00	8.53	530.07	484.86
8	733.29	0.30	0.30	0.00	172.70	172.70	0.00	173.00	8.53	735.54	672.81
9	614.20	0.30	0.30	0.00	172.70	172.60	-0.01	173.00	8.40	616.22	564.48
10	371.28	0.30	0.30	0.00	172.60	172.60	0.00	173.00	8.40	372.49	341.21
11	0.00	0.30	0.00	-0.03	172.60	0.00	-17.26	173.00	#VALUE!		
12	0.00	0.00	0.00	0.00	0.00	0.00	0.00	173.00	#VALUE!		

Cgas = (Cavg - Co) * Cma / (Cm - Co) Eq. 6C-1

where:
Cgas = Effluent gas concentration, drybasis, ppm
Cavg = Average gas concentraiton indicated by gas analyzer, dry basis, ppm
Co = Average of initial and final system calibration bias check responses for the zero gas, ppm
Cm = Average of initial and final system calibration bias check responses for the upscale calibration gas, ppm
Cma = Actual concentration of the upscale calibration gas, ppm

Client	Essroc San Juan	Test Date	5/9/2013
	Baghouse #2 Outlet	Project #	
Source Identification	Kiln	Operator	JG, JD, MF

Calibration Data For Sampling Runs: 1- Gas Type: Co Span: 1000	Cylinder Number	Cylinder Value % or PPM	Analyzer Response	Absolute Difference % or PPM	Difference % of Span	
Zero Gas		**0.00**	0	0	0.000	
Low-Range Gas		**0**	0	0	0	
Mid-Range Gas		**173.0**	173	0	0.000	
High-Range Gas		**498.0**	497.9	-0.1	-0.010	

Run #: 1 Gas Type: Co Span: 1000	Analyzer Response	Initial Values		Final Values		Drift % of Span
		System Response	System Cal. Bias % of Span	System Response	System Cal. Bias % of Span	
Zero Gas	0	0.1	0.01	0.1	0.01	0.00
Upscale Gas	173	172.8	-0.02	172.8	-0.02	0.00

Run #: 2 Gas Type: Co Span: 1000	Analyzer Response	Initial Values		Final Values		Drift % of Span
		System Response	System Cal. Bias % of Span	System Response	System Cal. Bias % of Span	
Zero Gas	0	0.1	0.01	0.1	0.01	0.00
Upscale Gas	173	172.8	-0.02	172.8	-0.02	0.00

Run #: 3 Gas Type: Co Span: 1000	Analyzer Response	Initial Values		Final Values		Drift % of Span
		System Response	System Cal. Bias % of Span	System Response	System Cal. Bias % of Span	
Zero Gas	0	0.1	0.01	0.2	0.02	0.01
Upscale Gas	173	172.8	-0.02	172.8	-0.02	0.00

Run #: 4 Gas Type: Co Span: 1000	Analyzer Response	Initial Values		Final Values		Drift % of Span
		System Response	System Cal. Bias % of Span	System Response	System Cal. Bias % of Span	
Zero Gas	0	0.2	0.02	0.2	0.02	0.00
Upscale Gas	173	172.8	-0.02	172.8	-0.02	0.00

Client	Essroc San Juan	Test Date	5/9/2013
	Baghouse #2 Outlet	Project #	
Source Identification	Kiln	Operator	JG, JD, MF

Run #: 5		Initial Values		Final Values		
Gas Type: Co Span: 1000	Analyzer Response	System Response	System Cal. Bias % of Span	System Response	System Cal. Bias % of Span	Drift % of Span
Zero Gas	0	0.2	0.02	0.2	0.02	0.00
Upscale Gas	173	172.8	-0.02	172.8	-0.02	0.00

Run #: 6		Initial Values		Final Values		
Gas Type: Co Span: 1000	Analyzer Response	System Response	System Cal. Bias % of Span	System	System Cal. Bias % of Span	Drift % of Span
Zero Gas	0	0.2	0.02	0.2	0.02	0.00
Upscale Gas	173	172.8	-0.02	172.8	-0.02	0.00

Run #: 7		Initial Values		Final Values		
Gas Type: Co Span: 1000	Analyzer Response	System Response	System Cal. Bias % of Span	System Response	System Cal. Bias % of Span	Drift % of Span
Zero Gas	0.0	0.2	0.02	0.3	0.03	0.01
Upscale Gas	173	172.8	-0.02	172.7	-0.03	-0.01

Run #: 8		Initial Values		Final Values		
Gas Type: Co Span: 1000	Analyzer Response	System Response	System Cal. Bias % of Span	System Response	System Cal. Bias % of Span	Drift % of Span
Zero Gas	0.0	0.3	0.03	0.3	0.03	0.00
Upscale Gas	173	172.7	-0.03	172.7	-0.03	0.00

Client	Essroc San Juan	Test Date	5/9/2013
	Baghouse #2 Outlet	Project #	
Source Identification	Kiln	Operator	JG, JD, MF

Run #: 9		Initial Values		Final Values		
Gas Type: Co Span: 1000	Analyzer Response	System Response	System Cal. Bias % of Span	System Response	System Cal. Bias % of Span	Drift % of Span
Zero Gas	0	0.3	0.03	0.3	0.03	0.00
Upscale Gas	173	172.7	-0.03	172.6	-0.04	-0.01

Run #: 10		Initial Values		Final Values		
Gas Type: Co Span: 1000	Analyzer Response	System Response	System Cal. Bias % of Span	System	System Cal. Bias % of Span	Drift % of Span
Zero Gas	0	0.3	0.03	0.3	0.03	0.00
Upscale Gas	173	172.6	-0.04	172.6	-0.04	0.00

$$\text{System Calibration Bias} = \frac{\text{System Cal. Response} - \text{Analyzer Cal. Response}}{\text{Span}} \times 100$$

$$\text{Drift} = \frac{\text{Final System Cal. Response} - \text{Initial System Cal. Response}}{\text{Span}} \times 100$$

INPUT

Analyzer Calibration

So2 Range	250		
Bottle		Response	
Zero	0.00	Zero	0.1
Mid	59.80	Mid	59.8
High	134.00	High	134

Nox Range	1000		
Bottle		Response	
Zero	0.00	Zero	0.1
Mid	303.00	Mid	302.9
High	667.00	High	666.9
No2 to No Converter check	24.00		24.2 ***PASS***

Co2 Range	25		
Bottle		Response	
Zero	0.00	Zero	0
Mid	11.90	Mid	11.9
High	20.80	High	20.8

O2 Range	25		
Bottle		Response	
Zero	0.00	Zero	0
Mid	10.20	Mid	10.2
High	21.20	High	21.2

Co Range	1000		
Zero	0.00	Zero	0
Mid	173.00	Mid	173
High	498.00	High	497.9
Span		Span	

Run 1

So2 ppm	17.04			
So2 Bias	Inital Zero	0.1	Intial Upscale	59.9
	Final Zero	0.1	Final Upscale	59.8
Nox ppm	202.08			
Nox Bias	Inital Zero	0.2	Intial Upscale	302.8
	Final Zero	0.2	Final Upscale	302.7
Co2 %	9.2			
Co2 Bias	Inital Zero	0	Intial Upscale	11.9
	Final Zero	0	Final Upscale	11.9
O2 %	15.52			
O2 Bias	Inital Zero	0	Intial Upscale	10.2
	Final Zero	0	Final Upscale	10.2
Co ppm	313.33			
	Inital Zero	0.1	Intial Upscale	172.8
	Final Zero	0.1	Final Upscale	172.8
Meter	Volume Mls	66.3	Delta-H	1.79
	Silica gel	18.8	Static Pres.	1.1
	Cubic FT	45	Delta-P	1.07
	Meter Temp	76.33	Stack Temp	339
	Correction	1		

Run 2

So2 ppm	0.01			
So2 Bias	Final Zero	0.1	Final Upscale	59.8
Nox ppm	171.07			
Nox Bias	Final Zero	0.2	Final Upscale	302.7
Co2 %	7.45			
Co2 Bias	Final Zero	0.1	Final Upscale	4.9
O2 %	15.38			
O2 Bias	Final Zero	0	Final Upscale	10.2
Co ppm	321.06			
Co Bias	Final Zero	0.1	Final Upscale	172.8
Meter	Volume Mls	66.3	Static Pres.	1
	Silica gel	18.8	Delta-P	1.07
	Cubic FT	45	Stack Temp	339
	Meter Temp	76.33		

Run 3

So2 ppm	0.01			
So2 Bias	Final Zero	0.1	Final Upscale	59.8
Nox ppm	168.1			
Nox Bias	Final Zero	0.3	Final Upscale	302.6
Co2 %	7.54			
Co2 Bias	Final Zero	0	Final Upscale	11.9
O2 %	15.58			
O2 Bias	Final Zero	0	Final Upscale	10.2
Co ppm	463.87			
Co Bias	Final Zero	0.2	Final Upscale	172.8
Meter	Volume Mls	62.7	Static Pres.	1.1
	Silica gel	19.8	Delta-P	1.08
	Cubic FT	44.77	Stack Temp	238
	Meter Temp	76.33		

Run 4

So2 ppm	0.01			
So2 Bias	Final Zero	0.1	Final Upscale	59.8
Nox ppm	172.83			
Nox Bias	Final Zero	0.3	Final Upscale	302.6
Co2 %	7.46			
Co2 Bias	Final Zero	0	Final Upscale	11.9
O2 %	15.42			
O2 Bias	Final Zero	0	Final Upscale	10.2
Co ppm	620.73			
Co Bias	Final Zero	0.2	Final Upscale	172.8
Meter	Volume Mls	62.7	Static Pres.	1.1
	Silica gel	19.8	Delta-P	1.09
	Cubic FT	44.77	Stack Temp	238
	Meter Temp	76.33		

Run 5

So2 ppm	0.68			
So2 Bias	Final Zero	0.1	Final Upscale	59.7
Nox ppm	190.21			
Nox Bias	Final Zero	0.3	Final Upscale	302.6
Co2 %	7.56			
Co2 Bias	Final Zero	0.1	Final Upscale	11.8
O2 %	15.62			
O2 Bias	Final Zero	0.1	Final Upscale	10.1
Co ppm	620.98			
Co Bias	Final Zero	0.2	Final Upscale	172.8
Meter	Volume Mls	64.5	Static Pres.	1.2
	Silica gel	20.6	Delta-P	1.08
	Cubic FT	44.8	Stack Temp	238
	Meter Temp	76.75		

Run 6

So2 ppm	0.01			
So2 Bias	Final Zero	0.1	Final Upscale	59.7
Nox ppm	203.33			
Nox Bias	Final Zero	0.3	Final Upscale	302.6
Co2 %	7.51			
Co2 Bias	Final Zero	0.1	Final Upscale	11.8
O2 %	15.56			
O2 Bias	Final Zero	0.1	Final Upscale	10.1
Co ppm	460.61			
Co Bias	Final Zero	0.2	Final Upscale	172.8
Meter	Volume Mls	64.5	Static Pres.	1.1
	Silica gel	20.6	Delta-P	1.08
	Cubic FT	44.8	Stack Temp	240
	Meter Temp	76.75		

Run 7

So2 ppm	0.95			
So2 Bias	Final Zero	0.1	Final Upscale	59.6
Nox ppm	210.52			
Nox Bias	Final Zero	0.4	Final Upscale	302.4
Co2 %	7.39			
Co2 Bias	Final Zero	0.1	Final Upscale	11.8
O2 %	15.62			
O2 Bias	Final Zero	0.1	Final Upscale	10.1
Co ppm	528.79			
Co Bias	Final Zero	0.3	Final Upscale	172.7
Meter	Volume Mls	65.1	Static Pres.	1.1
	Silica gel	20.3	Delta-P	1.09
	Cubic FT	44.97	Stack Temp	240
	Meter Temp	76.71		

Run 8

So2 ppm	0.01			
So2 Bias	Final Zero	0.1	Final Upscale	59.6
Nox ppm	192.45			
Nox Bias	Final Zero	0.4	Final Upscale	302.4
Co2 %	7.41			
Co2 Bias	Final Zero	0.1	Final Upscale	11.8
O2 %	15.47			
O2 Bias	Final Zero	0.1	Final Upscale	10.1
Co ppm	733.29			
Co Bias	Final Zero	0.3	Final Upscale	172.7
Meter	Volume Mls	65.1	Static Pres.	1.1
	Silica gel	20.3	Delta-P	1.08
	Cubic FT	44.97	Stack Temp	240
	Meter Temp	76.71		

Run 9

So2 ppm	0.01			
So2 Bias	Final Zero	0.2	Final Upscale	59.6
Nox ppm	203.95			
Nox Bias	Final Zero	0.4	Final Upscale	302.4
Co2 %	7.61			
Co2 Bias	Final Zero	0.1	Final Upscale	11.7
O2 %	15.39			
O2 Bias	Final Zero	0.1	Final Upscale	10
Co ppm	614.2			
Co Bias	Final Zero	0.3	Final Upscale	172.6
Meter	Volume Mls	64.2	Static Pres.	1.1
	Silica gel	19.7	Delta-P	1.09
	Cubic FT	44.96	Stack Temp	218
	Meter Temp	76.92		

Run 10

So2 ppm	0.01			
So2 Bias	Final Zero	0.2	Final Upscale	59.6
Nox ppm	191.81			
Nox Bias	Final Zero	0.4	Final Upscale	302.4
Co2 %	7.67			
Co2 Bias	Final Zero	0.1	Final Upscale	11.7
O2 %	15.46			
O2 Bias	Final Zero	0.1	Final Upscale	10
Co ppm	371.28			
Co Bias	Final Zero	0.3	Final Upscale	172.6
Meter	Volume Mls	64.2	Static Pres.	1.1
	Silica gel	19.7	Delta-P	1.08
	Cubic FT	44.96	Stack Temp	209
	Meter Temp	76.92		

Run 1 & 2

Essroc San Juan - Baghouse #2 Outlet								Methods 1-4		Test Date	5/9/2013
Meter Box Id:	2	Probe ID			Cold Box ID:	5		EPA Observer:			

As ft^2	Pbar	Pq (static)	Ps		Avg. Ts F	CO_2 - F_{CO_2}	O2	N2+C	Md	Ms	Pitot Ck
41.76	29.05	1.10	29.13		339	8.50	12.00	79.50	29.84	28.66	ok

Y	ΔH :	Cp	Vm cf	Vlc	Avg. Tm F	Vm std	Vw std	Bws	S Bws		Leak Ck
0.9960	1.79	0.84	45.000	85.10	76.33	43.017	4.006	0.085	7.692		0 @ 13"
								Assumed Bws:	10.000		

Avg. Sqrt Dlp	Vs	scfm wet	acfm		Qsd dscfh	# Sample Points	Dn	Total Test time	Time @ point	Avg. Dlh	Test Time
0.000	0.00	0	0		0.00E+00	24	0	60	2.50	1.790000	18:00-19:00

FALSE

Point No.	Meter (cf)	dl "p"	Target dl "h"	Actual dl "h"	Ts F	tm F (in)	tmF (out)	Cond Temp F	Filter Temp F	Probe Temp F	Vacuum	Imp. Liquid Collected		
A-1	232.35		1.79	1.79		75	75	63			9	Wt. (end)	Wt. (start)	lc
2	234.240		1.79	1.79		75	75	57			9	631.8	588.3	43.5
3	236.120		1.79	1.79		75	75	57			9	637.5	621.4	16.1
4	238.000		1.79	1.79		76	75	57			9	502.3	495.6	6.7
5	239.890		1.79	1.79		76	75	57			9	0.0	0.0	0.0
6	241.770		1.79	1.79		76	75	58			9	0.0	0.0	0.0
7	243.640		1.79	1.79		76	76	58			10	0.0	0.0	0.0
8	245.510		1.79	1.79		76	76	58			10	914.9	896.1	18.8
9	247.390		1.79	1.79		76	76	58			10			
10	249.260		1.79	1.79		76	76	59			10			
11	251.130		1.79	1.79		76	76	59			10			
12	253.000		1.79	1.79		76	76	59			10			
B-1	254.860		1.79	1.79		77	76	59			10			
2	256.740		1.79	1.79		76	76	59			10			
3	258.610		1.79	1.79		77	76	60			10			
4	260.490		1.79	1.79		77	76	60			10			
5	262.360		1.79	1.79		77	76	60			10			
6	264.230		1.79	1.79		77	76	60			10			
7	266.100		1.79	1.79		77	76	60			11			
8	267.980		1.79	1.79		77	77	61			11			
9	269.850		1.79	1.79		77	77	61			11			
10	271.710		1.79	1.79		77	77	62			11			
11	273.590		1.79	1.79		77	77	62			11			
12	275.460		1.79	1.79		77	77	63			11			
0	277.350													

Protect

Unprotect

An
0.00000000

Isokinetics	
Test Date	5/9/2013

Run 3 & 4

Essroc San Juan - Baghouse #2 Outlet							Methods 1-4		Test Date	5/9/2013	
Meter Box Id:	2	Probe ID			Cold Box ID:	5		EPA Observer:			
As ft^2	Pbar	Pq (static)	Ps		Avg. Ts F	CO2 - F_{CO2}	O2	N2+C	Md	Ms	Pitot Ck
41.76	29.05	1.10	29.13		288	9.00	11.50	79.50	29.90	28.71	ok
Y	ΔH :	Cp	Vm cf	Vlc	Avg. Tm F	Vm std	Vw std	Bws	S Bws		Leak Ck
0.9960	1.79	0.84	44.770	82.50	76.33	42.798	3.883	0.083	3.787		0 @ 14"
								Assumed Bws:	10.000		
Avg. Sqrt Dlp	Vs	scfm wet	acfm		Qsd dscfh	# Sample Points	Dn	Total Test time	Time @ point	Avg. Dlh	Test Time
0.000	0.00	0	0		0.00E+00	24	0	60	2.50	1.790000	19:23-20:23

Protect

Unprotect

An
0.00000000

FALSE

Point No.	Meter (cf)	dl "p"	Target ΔH	Actual dl ΔH	Ts F	tm F (in)	tm F (out)	Cond Temp F	Filter Temp F	Probe Temp F	Vacuum	Imp. Liquid Collected		
A-1	282.180		1.79	1.79		75	74	59			10	Wt. (end)	Wt. (start)	lc
2	284.040		1.79	1.79		75	75	57			10	640.8	601.5	39.3
3	285.900		1.79	1.79		75	75	57			10	653.8	637.4	16.4
4	287.760		1.79	1.79		76	75	57			10	514.8	507.8	7.0
5	289.610		1.79	1.79		76	75	58			10	0.0	0.0	0.0
6	291.460		1.79	1.79		76	75	58			10	0.0	0.0	0.0
7	293.310		1.79	1.79		76	75	58			10	0.0	0.0	0.0
8	295.160		1.79	1.79		76	76	58			10	932.3	912.5	19.8
9	297.000		1.79	1.79		76	76	59			11			
10	298.880		1.79	1.79		76	76	59			11	Isokinetics		
11	300.760		1.79	1.79		76	76	59			11	Test Date	5/9/2013	
12	302.640		1.79	1.79		77	76	59			11			
B-1	304.520		1.79	1.79		76	76	59			11			
2	306.410		1.79	1.79		76	75	60			10			
3	308.290		1.79	1.79		77	76	60			11			
4	310.160		1.79	1.79		77	76	60			11			
5	312.030		1.79	1.79		77	76	60			11			
6	313.890		1.79	1.79		77	76	60			11			
7	315.740		1.79	1.79		77	76	61			12			
8	317.620		1.79	1.79		77	76	61			12			
9	319.500		1.79	1.79		77	76	61			12			
10	321.370		1.79	1.79		77	76	61			12			
11	323.240		1.79	1.79		77	77	61			12			
12	325.100		1.79	1.79		77	76	62			12			
0	326.950													

Run 5 & 6

Essroc San Juan - Baghouse #2 Outlet								Methods 1-4		Test Date	5/9/2013
Meter Box Id:	2	Probe ID			Cold Box ID:	5		EPA Observer:			
As ft^2	Pbar	Pq (static)	Ps		Avg. Ts F	CO_2 - F_{CO_2}	O2	N2+C	Md	Ms	Pitot Ck
41.76	29.05	1.10	29.13		238	9.00	11.00	80.00	29.88	28.69	ok
Y	ΔH :	Cp	Vm cf	Vlc	Avg. Tm F	Vm std	Vw std	Bws	S Bws		Leak Ck
0.9960	1.79	0.84	44.800	85.10	76.75	42.793	4.006	0.086	1.654		0 @ 14"
								Assumed Bws:	10.000		
Avg. Sqrt Dlp	Vs	scfm wet	acfm		Qsd dscfh	# Sample Points	Dn	Total Test time	Time @ point	Avg. Dlh	Test Time
0.000	0.00	0	0		0.00E+00	24	0	60	2.50	1.790000	20:50-21:50
						FALSE					

Protect

Unprotect

An
0.00000000

Point No.	Meter (cf)	dl "p"	Target dl "h"	Actual dl "h"	Ts F	tm F (in)	tm F (out)	Cond Temp F	Filter Temp F	Probe Temp F	Vacuum	Imp. Liquid Collected		
A-1	328.31		1.79	1.79		75	74	58			8	Wt. (end)	Wt. (start)	lc
2	330.160		1.79	1.79		75	75	58			9	651.2	610.6	40.6
3	332.040		1.79	1.79		75	75	58			9	642.9	625.8	17.1
4	333.910		1.79	1.79		76	75	58			9	519.5	512.7	6.8
5	335.780		1.79	1.79		76	75	58			9	0.0	0.0	0.0
6	337.650		1.79	1.79		76	75	59			9	0.0	0.0	0.0
7	339.530		1.79	1.79		76	75	59			10	0.0	0.0	0.0
8	341.400		1.79	1.79		76	76	59			10	929.4	908.8	20.6
9	343.280		1.79	1.79		76	76	59			10			
10	345.140		1.79	1.79		77	76	59			10			
11	347.000		1.79	1.79		77	76	59			10			
12	348.850		1.79	1.79		77	76	60			10			
B-1	350.730		1.79	1.79		77	76	60			11			
2	352.610		1.79	1.79		77	76	60			11			
3	354.490		1.79	1.79		77	76	60			11			
4	356.360		1.79	1.79		77	76	60			11			
5	358.230		1.79	1.79		77	76	61			11			
6	360.100		1.79	1.79		77	76	61			11			
7	361.960		1.79	1.79		78	76	61			11			
8	363.830		1.79	1.79		78	76	62			11			
9	365.690		1.79	1.79		78	76	62			11			
10	367.550		1.79	1.79		78	76	62			11			
11	369.400		1.79	1.79		78	77	63			11			
12	371.250		1.79	1.79		78	77	64			11			
0	373.110													

Isokinetics	
Test Date	5/9/2013

Run 7 & 8

Essroc San Juan - Baghouse #2 Outlet									Test Date	5/9/2013	
Meter Box Id:	2	Probe ID			Cold Box ID:	5		EPA Observer:			
As ft^2	Pbar	Pq (static)	Ps		Avg. Ts F	CO2 - F_{CO2}	O2	N2+C	Md	Ms	Pitot Ck
41.76	29.05	1.10	29.13		#DIV/0!	9.00	11.50	79.50	29.90	28.71	ok
Y	ΔH@	Cp	Vm cf	Vlc	Avg. Tm F	Vm std	Vw std	Bws	S Bws		Leak Ck
0.9960	1.79	0.84	44.970	85.40	76.71	42.959	4.020	0.086	1.653	0.999	0 @ 14"
								Assumed Bws:	10.000		
Avg. Sqrt Dlp	Vs	scfm wet	acfm		Qsd dscfh	# Sample Points	Dn	Total Test time	Time @ point	Avg. Dlh	Test Time
0.000	#DIV/0!	#DIV/0!	#DIV/0!		#DIV/0!	24	0	60	5.00	1.790000	22:20-23:20

FALSE

Protect

Unprotect

An
0.00000000

Point No.	Meter (cf)	dl "p"	Target dl "h"	Actual dl "h"	Ts F	tm F (in)	XAD	Cond Temp F	Filter Temp F	Probe Temp F	Vacuum	Imp. Liquid Collected		
												Wt. (end)	Wt. (start)	lc
1	376.920			1.79		75	75	57			10	655.7	615.3	40.4
2	378.810			1.79		75	75	58			10	645.6	628.4	17.2
3	380.690			1.79		76	75	58			10	515.8	508.3	7.5
4	382.570			1.79		76	75	58			10	0.0	0.0	0.0
5	384.450			1.79		76	75	58			10	937.5	917.2	20.3
6	386.330			1.79		76	75	58			10			
7	388.220			1.79		76	76	58			10			
8	390.100			1.79		76	76	59			10			
9	391.980			1.79		76	76	59			10			
10	393.860			1.79		77	76	59			10			
11	395.740			1.79		77	76	59			10			
12	397.620			1.79		77	76	59			10			
B-1	399.500			1.79		77	76	60			10			
2	401.370			1.79		77	76	60			10			
3	403.240			1.79		77	76	60			10			
4	405.110			1.79		77	76	61			10			
5	406.960			1.79		77	76	61			10			
6	408.810			1.79		77	76	61			10			
7	410.660			1.79		77	76	62			11			
8	412.540			1.79		77	76	62			11			
9	414.420			1.79		78	76	62			11			
10	416.290			1.79		78	76	63			11			
11	418.160			1.79		78	76	63			11			
12	420.030			1.79		78	76	63			11			
0	421.890													

Isokinetics	
Test Date	5/9/2013

Run 9 & 10

Essroc San Juan - Baghouse #2 Outlet											Test Date	5/9/2013
Meter Box Id:	2	Probe ID			Cold Box ID:	5		EPA Observer:				
As ft^2	Pbar	Pq (static)	Ps		Avg. Ts F	$CO2 - F_{CO2}$	O2	N2+C	Md	Ms	Pitot Ck	
41.76	29.05	1.10	29.13		#DIV/0!	9.00	11.50	79.50	29.90	28.71	ok	
Y	ΔH :	Cp	Vm cf	Vlc	Avg. Tm F	Vm std	Vw std	Bws	S Bws		Leak Ck	
0.9960	1.79	0.84	44.960	83.90	76.92	42.933	3.949	0.084	1.270	0.999	0 @ 14"	
								Assumed Bws:	10.000			
Avg. Sqrt Dlp	Vs	scfm wet	acfm		Qsd dscfh	# Sample Points	Dn	Total Test time	Time @ point	Avg. Dlh	Test Time	
0.000	#DIV/0!	#DIV/0!	#DIV/0!		#DIV/0!	24	0	60	5.00	1.790000	23:40-00:40	

FALSE

Protect

Unprotect

An
0.00000000

Point No.	Meter (cf)	dl "p"	Target dl "h"	Actual dl "h"	Ts F	tm F (in)	XAD	Cond Temp F	Filter Temp F	Probe Temp F	Vacuum	Imp. Liquid Collected Wt. (end)	Wt. (start)	lc
1	424.41			1.79		76	75	59			9	662.6	622.4	40.2
2	426.300			1.79		76	76	59			9	654.6	637.3	17.3
3	428.190			1.79		76	76	59			9	518.8	512.1	6.7
4	430.070			1.79		76	76	59			9	0.0	0.0	0.0
5	431.950			1.79		76	76	60			9	0.0	0.0	0.0
6	433.830			1.79		76	76	60			9	0.0	0.0	0.0
7	435.720			1.79		76	76	60			9	934.5	914.8	19.7
8	437.590			1.79		77	76	60			9			
9	439.450			1.79		77	76	60			10			
10	441.340			1.79		77	76	60			10			
11	443.220			1.79		77	76	60			10			
12	445.090			1.79		77	76	61			10			
B-1	446.970			1.79		77	76	61			10			
2	448.840			1.79		77	76	61			10			
3	450.710			1.79		77	76	61			10			
4	452.580			1.79		77	77	61			10			
5	454.450			1.79		77	76	62			10			
6	456.310			1.79		77	76	62			10			
7	458.170			1.79		77	77	62			10			
8	460.020			1.79		78	77	62			10			
9	461.870			1.79		78	77	62			11			
10	463.750			1.79		78	77	63			11			
11	465.630			1.79		78	77	63			11			
12	467.500			1.79		78	77	63			11			
0	469.370													

Isokinetics	
Test Date	5/9/2013

Custom Stack Analysis, LLC.

Pitot Traverse Data Sheet

Plant: Essroc San Juan - Baghouse #2 Outle

Date: 5/9/2013

Location: Baghouse #2 Outlet

By: Jim G

Run No.	Run 1		Run 2		Run 3		Run 4		Run 5	
Point #	Pitot Δ P	°F	Pitot Δ P	°F	Pitot Δ P	°F	Pitot Δ P	°F	Pitot Δ P	°F
A-1	1.10	337	1.20	335	1.10	238	1.10	236	1.00	235
2	1.20	338	1.10	338	1.20	240	1.10	237	1.10	239
3	1.20	338	1.00	339	1.10	239	1.20	239	1.30	241
4	1.40	339	1.30	341	1.30	239	1.30	238	1.20	240
5	1.20	341	1.20	340	1.30	237	1.30	240	1.30	239
6	1.10	340	1.20	340	1.20	238	1.20	241	1.20	239
7	1.10	338	1.10	338	1.00	238	1.10	240	1.10	238
8	1.00	339	1.00	339	1.10	239	1.00	238	1.00	237
9	1.10	337	1.20	337	1.20	241	1.20	239	1.20	237
10	1.10	338	1.10	338	1.10	240	1.20	238	1.20	239
11	1.20	338	1.20	341	1.10	238	1.10	237	1.30	238
12	1.10	339	1.20	339	1.20	237	1.20	238	1.20	240
B-1	1.20	338	1.10	338	1.20	235	1.20	235	1.10	234
2	1.20	340	1.20	338	1.10	238	1.20	238	1.20	238
3	1.10	339	1.20	339	1.20	239	1.30	240	1.30	239
4	1.30	339	1.40	338	1.30	238	1.40	239	1.30	240
5	1.00	338	1.10	338	1.20	238	1.20	237	1.20	241
6	1.10	340	1.20	337	1.30	240	1.30	238	1.10	239
7	1.20	339	1.10	339	1.10	239	1.20	239	1.10	238
8	1.20	339	1.20	340	1.00	238	1.10	238	1.20	237
9	1.00	338	1.10	339	1.10	238	1.00	237	1.00	238
10	1.00	338	1.00	337	1.20	239	1.10	239	1.10	239
11	1.10	337	1.20	338	1.20	239	1.20	238	1.20	238
12	1.10	337	1.10	338	1.20	238	1.10	238	1.20	239
	1.07	339	1.07	339	1.08	238	1.09	238	1.08	238
Static:	1.10		1.00		1.10		1.10		1.20	

Custom Stack Analysis, LLC.

Pitot Traverse Data Sheet

Plant: Essroc San Juan - Baghouse #2 Outle

Date: 5/9/2013

Location: Baghouse #2 Outlet

By: Jim G

Run No.	Run 6		Run 7		Run 8		Run 9		Run 10	
Point #	Pitot Δ P	°F	Pitot Δ P	°F	Pitot Δ P	°F	Pitot Δ P	°F	Pitot Δ P	°F
A-1	1.10	240	1.20	236	1.10	237	1.20	215	1.00	206
2	1.20	239	1.20	238	1.20	241	1.10	219	1.10	209
3	1.30	240	1.10	240	1.20	240	1.20	221	1.20	212
4	1.40	239	1.20	242	1.20	240	1.20	220	1.20	211
5	1.20	241	1.30	241	1.40	239	1.30	219	1.30	209
6	1.10	242	1.20	241	1.30	240	1.20	219	1.20	210
7	1.20	240	1.10	241	1.20	240	1.20	218	1.30	211
8	1.10	241	1.10	240	1.10	240	1.20	217	1.20	212
9	1.10	239	1.20	240	1.20	241	1.20	217	1.10	211
10	1.10	240	1.10	241	1.10	241	1.30	219	1.20	210
11	1.20	240	1.30	241	1.00	240	1.30	218	1.20	209
12	1.10	239	1.10	240	1.10	239	1.20	220	1.10	208
B-1	1.20	238	1.10	237	1.00	237	1.20	214	1.00	207
2	1.20	238	1.20	238	1.10	240	1.10	218	1.10	209
3	1.20	239	1.30	239	1.20	241	1.20	219	1.20	210
4	1.30	240	1.40	241	1.30	240	1.30	220	1.30	210
5	1.10	241	1.10	242	1.20	240	1.20	221	1.20	211
6	1.10	241	1.20	241	1.30	241	1.20	219	1.20	210
7	1.20	240	1.20	242	1.20	242	1.30	218	1.20	209
8	1.20	239	1.20	242	1.10	240	1.30	217	1.30	210
9	1.10	240	1.20	241	1.10	241	1.20	218	1.30	208
10	1.00	241	1.10	241	1.20	241	1.10	219	1.20	208
11	1.10	240	1.20	241	1.20	242	1.00	218	1.10	209
12	1.20	240	1.10	241	1.10	241	1.10	218	1.00	208
	1.08	240	1.09	240	1.08	240	1.09	218	1.08	209
Static:	1.10		1.10		1.10		1.10		1.10	

Custom Stack Analysis, LLC.
Moisture Calculations (Runs 1 - 6)

Client:	Essroc San Juan
Site:	Baghouse #2 Outlet - Unit Kiln
Date:	05/09/13
Unit Number:	Kiln
Load:	

Run:	1	2	3
Volume of Condensate:	66.30	66.30	62.70
Weight of Silica Gel:	18.80	18.80	19.80
Volume Metered:	45.000	45.000	44.770
Meter Temperature:	76.33	76.33	76.33
Delta H:	1.79	1.79	1.79
Barometric Pressure:	29.05	29.05	29.05
Meter Correction Factor:	1.000	1.000	1.000
Volume Measured (DSCF):	43.19	43.19	42.97
Water Volume (SCF):	4.01	4.01	3.88
% Moisture in Flue Gas:	8.49	8.49	8.29

Run:	4	5	6
Volume of Condensate:	62.70	64.50	64.50
Weight of Silica Gel:	19.80	20.60	20.60
Volume Metered:	44.77	44.80	44.80
Meter Temperature:	76.33	76.75	76.75
Delta H:	1.79	1.79	1.79
Barometric Pressure:	29.05	29.05	29.05
Meter Correction Factor:	1.000	1.000	1.000
Volume Measured (DSCF):	42.97	42.96	42.96
Water Volume (SCF):	3.88	4.01	4.01
% Moisture in Flue Gas:	8.29	8.53	8.53

Custom Stack Analysis, LLC.
Moisture Calculations (Runs 7 - 12)

Client:	Essroc San Juan
Site:	Baghouse #2 Outlet - Unit Kiln
Date:	05/09/13
Unit Number:	Kiln
Load:	

Run:	7	8	9
Volume of Condensate:	65.10	65.10	64.20
Weight of Silica Gel:	20.30	20.30	19.70
Volume Metered:	44.97	44.97	44.96
Meter Temperature:	76.71	76.71	76.92
Delta H:	1.79	1.79	1.79
Barometric Pressure:	29.05	29.05	29.05
Meter Correction Factor:	1.000	1.000	1.000
Volume Measured (DSCF):	43.13	43.13	43.10
Water Volume (SCF):	4.02	4.02	3.95
% Moisture in Flue Gas:	8.53	8.53	8.40

Run:	10	11	12
Volume of Condensate:	64.20		
Weight of Silica Gel:	19.70		
Volume Metered:	44.96		
Meter Temperature:	76.92		
Delta H:	1.79	1.79	1.79
Barometric Pressure:	29.05	29.05	29.05
Meter Correction Factor:	1.000	1.000	1.000
Volume Measured (DSCF):	43.10	#VALUE!	#VALUE!
Water Volume (SCF):	3.95	#VALUE!	#VALUE!
% Moisture in Flue Gas:	8.40	#VALUE!	#VALUE!

Custom Stack Analysis, LLC.

Velocity Traverse Calculations and Results

Client: Essroc San Juan
Site: Baghouse #2 Outlet - Unit Kiln
Date: 05/09/13
Unit Number: Kiln
Load:

Run:		1	2	3
Start Time:		18:00	18:40	19:23
End Time:		18:20	19:00	19:43
Pitot Coefficient:		0.84	0.84	0.84
Barometric Pressure:	In. Hg.	29.05	29.05	29.05
Static Pressure:	In. H20	1.1	1	1.1
Square Root of Delta-P:		1.07	1.07	1.08
Flue Temperature:	Deg. F.	339	339	238
Percent CO2:	%	9.20	10.55	10.67
Percent O2:	%	15.52	15.38	15.58
Percent Moisture:	%	8.49	8.49	8.29
Area of Flue:	Sq. Ft.	41.76	41.76	41.76
Absolute Flue Pressure:	In. Hg.	29.13	29.12	29.13
Molecular Weight:	Lb/Lb Mole	29.07	29.26	29.31
Velocity of Flue Gas:	FPS	74.64	74.41	70.12
Volume of Flue Gas:	ACFM	187022	186431	175704
Volume of Flue Gas:	DSCFM	110070	109694	118629
Volume of Flue Gas:	KSCFM	120.28	119.87	129.35
Volume of Flue Gas:	KSCFH	7216.90	7192.27	7761.25

Custom Stack Analysis, LLC.

Velocity Traverse Calculations and Results

Client: Essroc San Juan
Site: Baghouse #2 Outlet - Unit Kiln
Date: 05/09/13
Unit Number: Kiln
Load:

Run:		4	5	6
Start Time:		20:05	20:49	21:32
End Time:		20:25	21:09	21:52
Pitot Coefficient:		0.84	0.84	0.84
Barometric Pressure:	In. Hg.	29.05	29.05	29.05
Static Pressure:	In. H20	1.1	1.2	1.1
Square Root of Delta-P:		1.09	1.08	1.08
Flue Temperature:	Deg. F.	238	238	240
Percent CO2:	%	7.46	7.57	7.54
Percent O2:	%	15.42	15.72	15.77
Percent Moisture:	%	8.29	8.53	8.53
Area of Flue:	Sq. Ft.	41.76	41.76	41.76
Absolute Flue Pressure:	In. Hg.	29.13	29.14	29.13
Molecular Weight:	Lb/Lb Mole	28.83	28.83	28.83
Velocity of Flue Gas:	FPS	71.36	70.69	70.81
Volume of Flue Gas:	ACFM	178794	177133	177420
Volume of Flue Gas:	DSCFM	120715	119311	119133
Volume of Flue Gas:	KSCFM	131.63	130.44	130.24
Volume of Flue Gas:	KSCFH	7897.71	7826.32	7814.66

Custom Stack Analysis, LLC.

Velocity Traverse Calculations and Results

Client: Essroc San Juan
Site: Baghouse #2 Outlet - Unit Kiln
Date: 05/09/13
Unit Number: Kiln
Load:

Run:		7	8	9
Start Time:		22:16	23:00	23:42
End Time:		22:36	23:20	00:02
Pitot Coefficient:		0.84	0.84	0.84
Barometric Pressure:	In. Hg.	29.05	29.05	29.05
Static Pressure:	In. H20	1.1	1.1	1.1
Square Root of Delta-P:		1.09	1.08	1.09
Flue Temperature:	Deg. F.	240	240	218
Percent CO2:	%	7.41	7.43	7.67
Percent O2:	%	15.83	15.68	15.67
Percent Moisture:	%	8.53	8.53	8.40
Area of Flue:	Sq. Ft.	41.76	41.76	41.76
Absolute Flue Pressure:	In. Hg.	29.13	29.13	29.13
Molecular Weight:	Lb/Lb Mole	28.81	28.81	28.86
Velocity of Flue Gas:	FPS	71.48	70.83	70.29
Volume of Flue Gas:	ACFM	179111	177475	176128
Volume of Flue Gas:	DSCFM	120271	119173	122283
Volume of Flue Gas:	KSCFM	131.49	130.28	133.49
Volume of Flue Gas:	KSCFH	7889.11	7817.09	8009.48

Custom Stack Analysis, LLC.

Velocity Traverse Calculations and Results

Client:	Essroc San Juan
Site:	Baghouse #2 Outlet - Unit Kiln
Date:	05/09/13
Unit Number:	Kiln
Load:	

Run:		10	11	12
Start Time:		00:26		
End Time:		00:46	#VALUE!	#VALUE!
Pitot Coefficient:		0.84	0.84	0.84
Barometric Pressure:	In. Hg.	29.05	29.05	29.05
Static Pressure:	In. H20	1.1		
Square Root of Delta-P:		1.08		
Flue Temperature:	Deg. F.	209		
Percent CO2:	%	7.77	#VALUE!	#VALUE!
Percent O2:	%	15.83	#VALUE!	#VALUE!
Percent Moisture:	%	8.40	#VALUE!	#VALUE!
Area of Flue:	Sq. Ft.	41.76	41.76	41.76
Absolute Flue Pressure:	In. Hg.	29.13	#VALUE!	#VALUE!
Molecular Weight:	Lb/Lb Mole	28.88	#VALUE!	#VALUE!
Velocity of Flue Gas:	FPS	69.16	#VALUE!	#VALUE!
Volume of Flue Gas:	ACFM	173292	#VALUE!	#VALUE!
Volume of Flue Gas:	DSCFM	121933	#VALUE!	#VALUE!
Volume of Flue Gas:	KSCFM	133.11	#VALUE!	#VALUE!
Volume of Flue Gas:	KSCFH	7986.51	#VALUE!	#VALUE!

Appendix #2

Laboratory Data

Lab Data Sheet For: Essroc San Juan - Baghouse #2 Outlet By: Jim G

Moisture Weights

RUN # 1&2			grams	grams	grams	grams	grams	grams	grams
		Box ID	1	2	3	4	5	6	Drierite
	Gross	5	631.8	637.5	502.3				914.9
	Tare		588.3	621.4	495.6				896.1
	Net		43.5	16.1	6.7	0.0	0.0	0.0	18.8
		Reagent	H2O	H2O	H2O	H2O			
		mLs	100.0	100.0	100.0	100.0			

		grams		grams	
Intial Imp mL =	300.0	Impinger Total =	66.3	Total =	85.1

RUN # 3&4			grams	grams	grams	grams	grams	grams	grams
		Box ID	1	2	3	4	5	6	Drierite
	Gross	5	640.8	653.8	514.8				932.3
	Tare		601.5	637.4	507.8				912.5
	Net		39.3	16.4	7.0	0.0	0.0	0.0	19.8
		Reagent	H2O	H2O	H2O	H2O			
		mLs	100.0	100.0	100.0	100.0			

		grams		grams	
Intial Imp mL =	300.0	Impinger Total =	62.7	Total =	82.5

RUN # 5&6			grams	grams	grams	grams	grams	grams	grams
		Box ID	1	2	3	4	5	6	Drierite
	Gross	5	651.2	642.9	519.5				929.4
	Tare		610.6	625.8	512.7				908.8
	Net		40.6	17.1	6.8	0.0	0.0	0.0	20.6
		Reagent	H2O	H2O	H2O	H2O			
		mLs	100.0	100.0	100.0	100.0			

		grams		grams	
Intial Imp mL =	300.0	Impinger Total =	64.5	Total =	85.1

RUN # 7&8			grams	grams	grams	grams	grams	grams	grams
		Box ID	1	2	3	4	5	6	Drierite
	Gross	5	655.7	645.6	515.8				937.5
	Tare		615.3	628.4	508.3				917.2
	Net		40.4	17.2	7.5	0.0	0.0	0.0	20.3
		Reagent	H2O	H2O	H2O	H2O			
		mLs	100.0	100.0	100.0	100.0			

		grams		grams	
Intial Imp mL =	300.0	Impinger Total =	65.1	Total =	85.4

RUN # 9&10			grams	grams	grams	grams	grams	grams	grams
		Box ID	1	2	3	4	5	6	Drierite
	Gross	5	662.6	654.6	518.8				934.5
	Tare		622.4	637.3	512.1				914.8
	Net		40.2	17.3	6.7	0.0	0.0	0.0	19.7
		Reagent	H2O	H2O	H2O	H2O			
		mLs	100.0	100.0	100.0	100.0			

		grams		grams	
Intial Imp mL =	300.0	Impinger Total =	64.2	Total =	83.9

Appendix #3

Calibration Data

Calibration
Certificate No. 1750.01

Calibration complies with ISO/IEC 17025, ANSI/NCSL Z540-1, and 9001

Cert. No.: 1870-4606376

Traceable® Certificate of Calibration for Digital Barometer Module

Cust ID:Custom Stack Analysis, LLC, 14614 Cenfield St NE, Attn: James Gray, Alliance, OH 44601 U.S.A. (RMA:972354)

Instrument Identification:

Model: 1870 S/N: 90724105 Manufacturer: Control Company

Standards/Equipment:

Description	Serial Number	Due Date	NIST Traceable Reference
Digital Barometer	D4540001	8/28/13	1000323498
Chilled Mirror Hygrometer	31874/H2048MOR	5/24/13	10100
Digital Thermometer	90969500	9/14/12	4000-3893285

Certificate Information:

Technician: 57 Procedure: CAL-31 Cal Date: 9/12/12 **Cal Due: 9/12/13**

Test Conditions: 22.5°C 42.0 %RH 1014 mBar

Calibration Data:

Unit(s)	Nominal	As Found	In Tol	Nominal	As Left	In Tol	Min	Max	±U	TUR
mb/hPa	804.10	808	Y	803.80	808	Y	793	814	1.20	>4:1
mb/hPa	908.50	911	Y	908.80	911	Y	898	919	1.20	>4:1
mb/hPa	1,015.20	1,016	Y	1,014.00	1,015	Y	1,004	1,025	1.20	>4:1
°C	23.524	23	Y	23.502	23	Y	23	25	0.580	1.7:1
%RH	40.990	35	Y	41.640	36	Y	32	52	1.300	>4:1

This Instrument was calibrated using Instruments Traceable to National Institute of Standards and Technology.

A Test Uncertainty Ratio of at least 4:1 is maintained unless otherwise stated and is calculated using the expanded measurement uncertainty. Uncertainty evaluation includes the instrument under test and is calculated in accordance with the ISO "Guide to the Expression of Uncertainty in Measurement" (GUM). The uncertainty represents an expanded uncertainty using a coverage factor k=2 to approximate a 95% confidence level. In tolerance conditions are based on test results falling within specified limits with no reduction by the uncertainty of the measurement. The results contained herein relate only to the item calibrated. This certificate shall not be reproduced except in full, without written approval of Control Company.

Nominal=Standard's Reading; As Left=Instrument's Reading; In Tol=In Tolerance; Min/Max=Acceptance Range; ±U=Expanded Measurement Uncertainty; TUR=Test Uncertainty Ratio; Accuracy=±(Max-Min)/2; Min = As Left Nominal(Rounded) - Tolerance; Max = As Left Nominal(Rounded) + Tolerance; Date=MM/DD/YY

Nicol Rodriguez, Quality Manager

Wallace Berry, Technical Manager

Maintaining Accuracy:

In our opinion once calibrated your Digital Barometer Module should maintain its accuracy. There is no exact way to determine how long calibration will be maintained. Digital Barometer Modules change little, if any at all, but can be affected by aging, temperature, shock, and contamination.

Recalibration:

For factory calibration and re-certification traceable to National Institute of Standards and Technology contact Control Company.

CONTROL COMPANY 4455 Rex Road Friendswood, TX 77546 USA
Phone 281 482-1714 Fax 281 482-9448 service@control3.com www.control3.com

Control Company is an ISO 17025:2005 Calibration Laboratory Accredited by (A2LA) American Association for Laboratory Accreditation, Certificate No. 1750.01.
Control Company is ISO 9001:2008 Quality Certified by (DNV) Det Norske Veritas, Certificate No. CERT-01805-2006-AO-HOU-RvA.
International Laboratory Accreditation Cooperation (ILAC) - Multilateral Recognition Arrangement (MRA).

Traceable® is a registered trademark of Control Company. © 2009 Control Company

ilac-MRA

ACCREDITED

Calibration
Certificate No. 1750.01

Calibration complies with ISO/IEC 17025, ANSI/NCSL Z540-1, and 9001

Cert. No.: 3415-4595807

Traceable® Certificate of Calibration for Digital Calipers

Cust ID:Custom Stack Analysis, LLC, 14614 Cenfield St NE, Attn: James Gray, Alliance, OH 44601 U.S.A. (RMA-972354)

Instrument Identification:

Model: 3415 S/N: 101856179 Manufacturer: Control Company

Standards/Equipment:

Description	Serial Number	Due Date	NIST Traceable Reference
Gage Set	99146223	10/03/12	1000305379

Certificate Information:

Technician: 57 Procedure: CAL-05 Cal Date: 9/11/12 Cal Due: 9/11/13

Test Conditions: 23.0°C 43.0 %RH 1017 mBar

Calibration Data:

Unit(s)	Nominal	As Found	In Tol	Nominal	As Left	In Tol	Min	Max	±U	TUR
in	0.0000	0.0000	Y	0.0000	0.0000	Y	-0.0010	0.0010	0.0003	3.3:1
in	0.1000	0.1000	Y	0.1000	0.1000	Y	0.0990	0.1010	0.0003	3.3:1
in	2.0000	2.0000	Y	2.0000	2.0000	Y	1.9980	2.0020	0.0003	>4:1
in	4.0000	4.0000	Y	4.0000	4.0000	Y	3.9960	4.0040	0.0004	>4:1
in	6.0000	6.0000	Y	6.0000	6.0005	Y	5.9940	6.0060	0.0004	>4:1
in depth	2.0000	1.9995	Y	2.0000	1.9995	Y	1.9980	2.0020	0.0003	>4:1
in step	2.0000	1.9995	Y	2.0000	1.9995	Y	1.9990	2.0010	0.0004	2.8:1
in inside	1.0000	1.0000	Y	1.0000	1.0000	Y	0.9990	1.0010	0.0003	3.2:1

This Instrument was calibrated using Instruments Traceable to National Institute of Standards and Technology.

A Test Uncertainty Ratio of at least 4:1 is maintained unless otherwise stated and is calculated using the expanded measurement uncertainty. Uncertainty evaluation includes the instrument under test and is calculated in accordance with the ISO "Guide to the Expression of Uncertainty in Measurement" (GUM). The uncertainty represents an expanded uncertainty using a coverage factor k=2 to approximate a 95% confidence level. In tolerance conditions are based on test results falling within specified limits with no reduction by the uncertainty of the measurement. The results contained herein relate only to the item calibrated. This certificate shall not be reproduced except in full, without written approval of Control Company.

Nominal=Standard's Reading; As Left=Instrument's Reading; In Tol=In Tolerance; Min/Max=Acceptance Range; ±U=Expanded Measurement Uncertainty; TUR=Test Uncertainty Ratio; Accuracy=±(Max-Min)/2; Min = As Left Nominal(Rounded) - Tolerance; Max = As Left Nominal(Rounded) + Tolerance; Date=MM/DD/YY

Nicol Rodriguez, Quality Manager

Wallace Berry, Technical Manager

Maintaining Accuracy:

In our opinion once calibrated your Digital Calipers should maintain its accuracy. There is no exact way to determine how long calibration will be maintained. Digital Calipers change little, if any at all, but can be affected by aging, temperature, shock, and contamination.

Recalibration:

For factory calibration and re-certification traceable to National Institute of Standards and Technology contact Control Company.

CONTROL COMPANY 4455 Rex Road Friendswood, TX 77546 USA
Phone 281 482-1714 Fax 281 482-9448 service@control3.com www.control3.com

Control Company is an ISO 17025:2005 Calibration Laboratory Accredited by (A2LA) American Association for Laboratory Accreditation, Certificate No. 1750.01.
Control Company is ISO 9001:2008 Quality Certified by (DNV) Det Norske Veritas, Certificate No. CERT-01805-2006-AQ-HOU-RvA.
International Laboratory Accreditation Cooperation (ILAC) - Multilateral Recognition Arrangement (MRA).

Traceable® is a registered trademark of Control Company © 2009 Control Company

Calibration complies with ISO/IEC 17025, ANSI/NCSL Z540-1, and 9001

Cert. No.: 1870-4680146

Calibration Certificate No. 1750.01

Traceable® Certificate of Calibration for Digital Barometer Module

Manufactured for and distributed by: VWR International, LLC, Radnor Corporate Center, Bldg 1, Ste 200, 100 Matsonford Road, Radnor, PA 19087

Instrument Identification:

Custom Stack Analysis, LLC, 14614 Cenfield St NE, Attn: Brian Lemasters, Alliance, OH 44601 U.S.A. (RMA:972943)

Model: 23609-208 S/N: 61542879 Manufacturer: Control Company

Standards/Equipment:

Description	Serial Number	Due Date	NIST Traceable Reference
Digital Barometer	D4540001	8/28/13	1000323498
Chilled Mirror Hygrometer	31874/H2048MCR	5/24/13	10100
Digital Thermometer	90969500	9/17/13	4000-5608482

Certificate Information:

Technician: 57 Procedure: CAL-31 Cal Date: 10/18/12 Cal Due: 10/18/13

Test Conditions: 22.0°C 47.0 %RH 1010 mBar

Calibration Data:

Unit(s)	Nominal	As Found	In Tol	Nominal	As Left	In Tol	Min	Max	±U	TUR
mb/hPa	805.75	803	Y	803.90	801	Y	793	814	1.20	>4:1
mb/hPa	908.80	907	Y	909.60	908	Y	899	920	1.20	>4:1
mb/hPa	1,017.40	1,016	Y	1,004.40	1,004	Y	994	1,015	1.20	>4:1
°C	24.396	24	Y	24.012	25	Y	23	25	0.580	1.7:1
%RH	44.980	40	Y	42.820	37	Y	33	53	1.300	>4:1

This Instrument was calibrated using Instruments Traceable to National Institute of Standards and Technology.

A Test Uncertainty Ratio of at least 4:1 is maintained unless otherwise stated and is calculated using the expanded measurement uncertainty. Uncertainty evaluation includes the instrument under test and is calculated in accordance with the ISO "Guide to the Expression of Uncertainty in Measurement" (GUM). The uncertainty represents an expanded uncertainty using a coverage factor k=2 to approximate a 95% confidence level. In tolerance conditions are based on test results falling within specified limits with no reduction by the uncertainty of the measurement. The results contained herein relate only to the item calibrated. This certificate shall not be reproduced except in full, without written approval of Control Company.

Nominal=Standard's Reading; As Left=Instrument's Reading; In Tol=In Tolerance; Min/Max=Acceptance Range; ±U=Expanded Measurement Uncertainty; TUR=Test Uncertainty Ratio; Accuracy=±(Max-Min)/2; Min = As Left Nominal(Rounded) - Tolerance; Max = As Left Nominal(Rounded) + Tolerance; Date=MM/DD/YY

Nicol Rodriguez, Quality Manager

Wallace Berry, Technical Manager

Maintaining Accuracy:

In our opinion once calibrated your Digital Barometer Module should maintain its accuracy. There is no exact way to determine how long calibration will be maintained. Digital Barometer Modules change little, if any at all, but can be affected by aging, temperature, shock, and contamination.

Recalibration:

For factory calibration and re-certification traceable to National Institute of Standards and Technology contact Control Company.

CONTROL COMPANY 4455 Rex Road Friendswood, TX 77546 USA
Phone 281 482-1714 Fax 281 482-9448 service@control3.com www.control3.com

Control Company is an ISO 17025:2005 Calibration Laboratory Accredited by (A2LA) American Association for Laboratory Accreditation, Certificate No. 1750.01.
Control Company is ISO 9001:2008 Quality Certified by (DNV) Det Norske Veritas, Certificate No. CERT-01805-2006-AQ-HOU-RvA.
International Laboratory Accreditation Cooperation (ILAC) - Multilateral Recognition Arrangement (MRA).

Traceable® is a registered trademark of Control Company

© 2009 Control Company

Calibration Certificate No. 1750.01

Calibration complies with ISO/IEC 17025, ANSI/NCSL Z540-1, and 9001

Cert. No.: 3415-4528309

Traceable® Certificate of Calibration for Digital Calipers

Cust ID:Custom Stack Analysis, LLC, 14614 Cenfield St NE, Attn: Brian Lemasters, Alliance, OH 44601 U.S.A. (RMA:971490)

Instrument Identification:

Model: 62379-531 S/N: 51055322 Manufacturer: Control Company

Standards/Equipment:

Description	Serial Number	Due Date	NIST Traceable Reference
Gage Set	99146223	10/03/12	1000305379

Certificate Information:

Technician: 57 Procedure: CAL-05 Cal Date: 8/03/12 Cal Due: 8/03/13

Test Conditions: 25.5°C 41.0 %RH 1013 mBar

Calibration Data:

Unit(s)	Nominal	As Found	In Tol	Nominal	As Left	In Tol	Min	Max	±U	TUR
in	0.0000	0.0000	Y	0.0000	0.0000	Y	-0.0010	0.0010	0.0003	3.3:1
in	0.1000	0.0995	Y	0.1000	0.0995	Y	0.0990	0.1010	0.0003	3.3:1
in	2.0000	1.9995	Y	2.0000	1.9995	Y	1.9980	2.0020	0.0003	>4:1
in	4.0000	4.0000	Y	4.0000	3.9990	Y	3.9960	4.0040	0.0004	>4:1
in	6.0000	5.9990	Y	6.0000	5.9980	Y	5.9940	6.0060	0.0004	>4:1
in depth	2.0000	1.9995	Y	2.0000	1.9990	Y	1.9980	2.0020	0.0003	>4:1
in step	2.0000	2.0000	Y	2.0000	1.9995	Y	1.9990	2.0010	0.0004	2.7:1
in inside	1.0000	0.9990	Y	1.0000	0.9990	Y	0.9990	1.0010	0.0003	3.1:1

This Instrument was calibrated using Instruments Traceable to National Institute of Standards and Technology.

A Test Uncertainty Ratio of at least 4:1 is maintained unless otherwise stated and is calculated using the expanded measurement uncertainty. Uncertainty evaluation includes the instrument under test and is calculated in accordance with the ISO "Guide to the Expression of Uncertainty in Measurement" (GUM). The uncertainty represents an expanded uncertainty using a coverage factor k=2 to approximate a 95% confidence level. In tolerance conditions are based on test results falling within specified limits with no reduction by the uncertainty of the measurement. The results contained herein relate only to the item calibrated. This certificate shall not be reproduced except in full, without written approval of Control Company.

Nominal=Standard's Reading; As Left=Instrument's Reading; In Tol=In Tolerance; Min/Max=Acceptance Range; ±U=Expanded Measurement Uncertainty; TUR=Test Uncertainty Ratio; Accuracy=±(Max-Min)/2; Min = As Left Nominal(Rounded) - Tolerance; Max = As Left Nominal(Rounded) + Tolerance; Date=MM/DD/YY

Nicol Rodriguez, Quality Manager

Wallace Berry, Technical Manager

Maintaining Accuracy:

In our opinion once calibrated your Digital Calipers should maintain its accuracy. There is no exact way to determine how long calibration will be maintained. Digital Caliperss change little, if any at all, but can be affected by aging, temperature, shock, and contamination.

Recalibration:

For factory calibration and re-certification traceable to National Institute of Standards and Technology contact Control Company

CONTROL COMPANY 4455 Rex Road Friendswood, TX 77546 USA
Phone 281 482-1714 Fax 281 482-9448 service@control3.com www.control3.com

Control Company is an ISO 17025:2005 Calibration Laboratory Accredited by (A2LA) American Association for Laboratory Accreditation, Certificate No. 1750.01.
Control Company is ISO 9001:2008 Quality Certified by (DNV) Det Norske Veritas, Certificate No. CERT-01805-2006-AQ-HOU-RvA.
International Laboratory Accreditation Cooperation (ILAC) - Multilateral Recognition Arrangement (MRA).

Traceable® is a registered trademark of Control Company

© 2009 Control Company

Calibration Certificate No. 1750.01

Calibration complies with ISO/IEC 17025, ANSI/NCSL Z540-1, and 9001

Cert. No.: 1870-4536612

Traceable® Certificate of Calibration for Digital Barometer Module

Cust ID:Custom Stack Analysis, LLC, 14614 Cenfield St NE, Attn: Brian Lemasters, Alliance, OH 44601 U.S.A. (RMA:971490)

Instrument Identification:

Model: 23609-208 S/N: 41370014 Manufacturer: Control Company

Standards/Equipment:

Description	Serial Number	Due Date	NIST Traceable Reference
Digital Barometer	D4540001	8/15/12	1000302796
Chilled Mirror Hygrometer	31874/H2048MCR	5/24/13	10100
Digital Thermometer	90969500	9/14/12	4000-3893285

Certificate Information:

Technician: 57 Procedure: CAL-31 Cal Date: 8/06/12 Cal Due: 8/06/13

Test Conditions: 24.0°C 42.0 %RH 1018 mBar

Calibration Data:

Unit(s)	Nominal	As Found	In Tol	Nominal	As Left	In Tol	Min	Max	±U	TUR
mb/hPa	805.50	803	Y	804.65	800	Y	794	815	1.20	>4:1
mb/hPa	909.30	908	Y	909.45	908	Y	899	920	1.20	>4:1
mb/hPa	1,010.92	1,010	Y	1,016.15	1,015	Y	1,006	1,027	1.20	>4:1
°C	23.566	23	Y	23.221	24	Y	22	24	0.580	1.7:1
%RH	41.080	30	N	43.950	34	Y	34	54	1.300	>4:1

This Instrument was calibrated using Instruments Traceable to National Institute of Standards and Technology.

A Test Uncertainty Ratio of at least 4:1 is maintained unless otherwise stated and is calculated using the expanded measurement uncertainty. Uncertainty evaluation includes the instrument under test and is calculated in accordance with the ISO "Guide to the Expression of Uncertainty in Measurement" (GUM). The uncertainty represents an expanded uncertainty using a coverage factor k=2 to approximate a 95% confidence level. In tolerance conditions are based on test results falling within specified limits with no reduction by the uncertainty of the measurement. The results contained herein relate only to the item calibrated. This certificate shall not be reproduced except in full, without written approval of Control Company.

Nominal=Standard's Reading; As Left=Instrument's Reading; In Tol=In Tolerance; Min/Max=Acceptance Range; ±U=Expanded Measurement Uncertainty; TUR=Test Uncertainty Ratio
Accuracy=±(Max-Min)/2; Min = As Left Nominal(Rounded) - Tolerance, Max = As Left Nominal(Rounded) + Tolerance; Date=MM/DD/YY

Nicol Rodriguez, Quality Manager

Wallace Berry, Technical Manager

Maintaining Accuracy:

In our opinion once calibrated your Digital Barometer Module should maintain its accuracy. There is no exact way to determine how long calibration will be maintained. Digital Barometer Modules change little, if any at all, but can be affected by aging, temperature, shock, and contamination.

Recalibration:

For factory calibration and re-certification traceable to National Institute of Standards and Technology contact Control Company.

CONTROL COMPANY 4455 Rex Road Friendswood, TX 77546 USA
Phone 281 482-1714 Fax 281 482-9448 service@control3.com www.control3.com

Control Company is an ISO 17025:2005 Calibration Laboratory Accredited by (A2LA) American Association for Laboratory Accreditation. Certificate No. 1750.01
Control Company is ISO 9001:2008 Quality Certified by (DNV) Det Norske Veritas. Certificate No. CERT-01805-2005-AQ-HOU-RvA
International Laboratory Accreditation Cooperation (ILAC) - Multilateral Recognition Arrangement (MRA)

Traceable® is a registered trademark of Control Company © 2009 Control Company

H-B Instrument - Manufacturing Since 1903
A Division of Bel-Art Products

Triple Accredited/Registered
ISO 9001:2008 Registered Manufacturer
ISO 14001:2004 Registered Manufacturer
ISO/IEC 17025:2005 Accredited Laboratory

H-B Instrument
Thermometer Calibration Report
Traceable to NIST

ACCREDITED
Calibration Cert. # 2448.01

This laboratory is accredited in accordance with the recognized International Standard **ISO/IEC 17025:2005** General Requirements for the Competence of Testing and Calibration Laboratories. This laboratory also meets the requirements of **ANSI/NCSL Z540-1-1994** and any additional program requirements in the field of calibration. This accreditation also demonstrates technical competence for a defined scope and the operation of a laboratory quality management system (refer to joint ISO-ILAC-IAF Communique dated 18 June 2005).

The instrument described below has been examined and tested in H-B Instrument's Calibration Laboratory using controlled constant temperature equipment and standard thermometers traceable to NIST in accordance with our calibration procedure LAB-20 which is based in part on NBS Monograph 150, ASTM Method E-77, NIST SP 1088, and the International Temperature Scale ITS-90. Calibration is traceable to NIST. For a discussion of accuracy obtainable with such thermometers, see NIST SP 250-23. The results stated relate only to the instrument bearing the serial number identified.

This instrument is in good working order and is suitable for calibration. The capillary of the thermometer has been examined under magnification and no discernable capillary irregularities were noted. Strains in the glass revealed by examination under a polarized lens, if any, were judged to be minimal and of no detriment to the function of the instrument.

25-Oct-12

Custom Stack Analysis, LLC.
James Gray
14614 Cenfield St. NE
Alliance OH 44601

Tel: 1-330-525-51 Fax:
Reference No: 00-207

Report No.	339299
Serial No	4B5200
Part No	61099-046
Distributor	H-B Instrument
Manufacturer	H-B Instrument Company/MW
Item	Thermometer, ASTM 63F
Range	18/89°F, 0.2°F Div., Total Imm., Hg

N.I.S.T. Standard	Instrument Tested	Correction (ITS-90)*	Standard Serial No.	Traceability	Expanded Uncertainty (k=2)	Emer. Stem** Temperature
20.00 ° F	19.98 ° F	0.02	1285-028-415	CAL113829	± 0.151	°
32.00 ° F	32.04 ° F	-0.04	1285-028-415	CAL113829	± 0.092	°
50.00 ° F	50.00 ° F	0.00	1285-028-415	CAL113829	± 0.099	°

Ambient Air Temperature: 73 ° F Relative Humidity: 44 %

* Observed instrument readings should be increased by positive numbers or reduced by negative numbers indicated by a minus (-) sign.
** Emergent Stem Temperature relates to PARTIAL IMMERSION thermometers ONLY.

The best measurement uncertainties associated with our calibration system are ±0.074°C from -80 to -1°C, ±0.041°C at the ice point in melting ice bath, ±0.045°C from 1 to 100°C, ±0.051°C from 101 to 200°C, ±0.047°C from 201 to 300°C, and ±0.052°C from 301 to 400°C. These uncertainties have been calculated using our Work Instruction WI-19 to 22 that utilizes methods found in NIST Technical Note 1297. The reported uncertainty represents an expanded uncertainty expressed at approximately the 95% confidence level using a coverage factor of k=2. The uncertainty of measurement is an important factor to consider when evaluating this instrument for conformance to tolerance standards.

Calibrated By: Leah Smith, Calibration Technician — Title
Checked By: Erika Reedy, Calibration Manager — Title

H-B Instrument
102 West Seventh Avenue, Trappe, PA 19426-0770 USA
Telephone: (610) 489-5500 • Fax: (610) 489-9100
Email Address: cal@hbinstrument.com
Website Address: www.hbinstrument.com

Design Copyright ©HBI 2012 Form 0-592 Rev. 14

This Report of Test may not be reproduced without the express written permission of H-B Instrument

H-B Instrument - Manufacturing Since 1903
A Division of Bel-Art Products

Triple Accredited/Registered
ISO 9001:2008 Registered Manufacturer
ISO 14001:2004 Registered Manufacturer
ISO/IEC 17025:2005 Accredited Laboratory

H-B Instrument

Thermometer Calibration Report

Traceable to NIST

Calibration Cert. # 2448.01

This laboratory is accredited in accordance with the recognized International Standard **ISO/IEC 17025:2005** General Requirements for the Competence of Testing and Calibration Laboratories. This laboratory also meets the requirements of **ANSI/NCSL Z540-1-1994** and any additional program requirements in the field of calibration. This accreditation also demonstrates technical competence for a defined scope and the operation of a laboratory quality management system (refer to joint ISO-ILAC-IAF Communique dated 18 June 2005).

The instrument described below has been examined and tested in H-B Instrument's Calibration Laboratory using controlled constant temperature equipment and standard thermometers traceable to NIST in accordance with our calibration procedure LAB-20 which is based in part on NBS Monograph 150, ASTM Method E-77, NIST SP 1088, and the International Temperature Scale ITS-90. Calibration is traceable to NIST. For a discussion of accuracy obtainable with such thermometers, see NIST SP 250-23. The results stated relate only to the instrument bearing the serial number identified.

This instrument is in good working order and is suitable for calibration. The capillary of the thermometer has been examined under magnification and no discernable capillary irregularities were noted. Strains in the glass revealed by examination under a polarized lens, if any, were judged to be minimal and of no detriment to the function of the instrument.

25-Oct-12

Custom Stack Analysis, LLC.
James Gray
14614 Cenfield St. NE
Alliance OH 44601

Tel: 1-330-525-51 Fax:
Reference No: 00-207

Report No.	339298
Serial No	4A6108
Part No	61099-126
Distributor	H-B Instrument
Manufacturer	H-B Instrument Company/MW
Item	Thermometer, ASTM 66F-86
Range	167/221°F, 0.2°Div., Total Imm., Hg

N.I.S.T. Standard	Instrument Tested	Correction (ITS-90)*	Standard Serial No.	Traceability	Expanded Uncertainty (k=2)	Emer. Stem** Temperature
185.00 ° F	185.08 ° F	-0.08	1285-028-415	CAL113829	± 0.099	°
212.00 ° F	212.02 ° F	-0.02	1285-028-415	CAL113829	± 0.099	°
220.00 ° F	220.00 ° F	0.00	1285-028-415	CAL113829	± 0.110	°

Ambient Air Temperature: 73 ° F Relative Humidity: 44 %

* Observed instrument readings should be increased by positive numbers or reduced by negative numbers indicated by a minus (-) sign.
** Emergent Stem Temperature relates to PARTIAL IMMERSION thermometers ONLY.

The best measurement uncertainties associated with our calibration system are ±0.074°C from -80 to -1°C, ±0.041°C at the ice point in melting ice bath, ±0.045°C from 1 to 100°C, ±0.051°C from 101 to 200°C, ±0.047°C from 201 to 300°C, and ±0.052°C from 301 to 400°C. These uncertainties have been calculated using our Work Instruction WI-19 to 22 that utilizes methods found in NIST Technical Note 1297. The reported uncertainty represents an expanded uncertainty expressed at approximately the 95% confidence level using a coverage factor of k=2. The uncertainty of measurement is an important factor to consider when evaluating this instrument for conformance to tolerance standards.

Leah Smith, Calibration Technician
Calibrated By

Erika Reedy, Calibration Manager
Checked By Title

H-B Instrument
102 West Seventh Avenue, Trappe, PA 19426-0770 USA
Telephone: (610) 489-5500 • Fax: (610) 489-9100
Email Address: cal@hbinstrument.com
Website Address: www.hbinstrument.com

Design Copyright ©HBI 2012 Form 0-592 Rev. 14

This Report of Test may not be reproduced without the express written permission of H-B Instrument

TRANSCAT® CALIBRATION SERVICES

NVLAP®

NVLAP LAB CODE
200867-0

CERTIFICATE OF CALIBRATION

Customer: CUSTOM STACK ANALYSIS
14614 CENFIELD STREET NE
ALLIANCE, OH 44601

Customer Nbr: 1-597810-000
PO Nbr: ___
Date Received: November 28, 2012

Cert/SO Nbr: 15-B21BY-29-1
Manufacturer: Altek Industries Corp
Model Nbr: 22

Date Completed: December 03, 2012
Due Date: December 03, 2013

Description: Thermocouple Calibrator
Serial Nbr: 243783
ID Nbr: NONE
Unit Barcode: 901B0096753

Calibrated To: Manufacturer Specification
Calibration Proc: 1-AC06679-5
Item Received: Out Of Tolerance
Item Returned: In Tolerance

Transcat Calibration Laboratories have been audited and found in compliance with ISO/IEC 17025:2005. Accredited calibrations performed within the Lab's Scope of Accreditation are indicated by the presence of the Accrediting Body's Logo and Certificate Number on this Certificate of Calibration. Any measurements on an accredited calibration not covered by that Lab's Scope are listed in the notes section of the certificate. This report must not be used to claim product certification, approval, or endorsement by NVLAP, NIST, or any agency of the Federal Government.

Transcat calibrations as applicable are performed in compliance with the requirements of ISO9001:2008, ISO TS16949, ANSI/NCSL Z540-1994, and ISO 10012-1992. When specified contractually the requirements of 10CFR21, 10CFR50 App. B and NQA-1 are also covered.

Traceability includes no less than An unbroken chain of comparison realization of SI units measurement uncertainty, documentation, competence, periodic recalibration and measurement assurance. Transcat documents the traceability of measurements to the SI units through the National Institute of Standards and Technology(NIST) or the National Research Council of Canada(NRC), or other recognized national measurement institutes (NMI's) or international standard bodies, or to measurable conditions created in our laboratory, or accepted fundamental and/or natural physical constants, ratio type of calibration, or by comparison to consensus standards. The specific path of traceability for the reported measurement results is maintained at the Transcat facility and is available there for review.

Complete records of work performed are maintained by Transcat and are available for inspection. Laboratory standards used in the performance of this calibration are shown on the Supplemental Report.

The results in this report relate only to the item calibrated or tested and the determination of in or out of tolerance is specific to the model/serial no. referenced above based on the tolerances shown on the supplemental report, these tolerances are either the original equipment manufacturer's (OEM's) warranted specifications or the client's requested specifications.

The applied uncertainty is the uncertainty of the calibration process. The Test Uncertainty Ratio (TUR) is calculated as per NCSL International RP9, section 8.2. All calibrations have been performed using processes having a TUR of 4 : 1 or better, unless otherwise noted on the Supplemental Report. Uncertainties have been estimated at a 95 percent confidence level(k=2). Calibration at a 4:1 TUR (or greater) provides reasonable confidence that the instrument is within the stated tolerances. For measuring instruments in order to consider the contribution to the uncertainty from reproducibility of the unit under test(UUT), add 0.6 of the UUT's least significant digit to the reported uncertainty. For mass calibrations Conventional mass referenced to 8.0 g/cm³.

Any number of factors can cause a unit to drift out of tolerance at any time following its calibration. Limitations on the uses of this instrument are detailed in the OEM's operating instructions.

Notes: Unit was received Out of Tolerance. Verified by J. U. Unit was adjusted to meet manufacturer's specifications.

Calibrated At:
2056 S. Alex Road
West Carrollton, OH 45449
By: Joshua Holtzapple
Digitally Signed On December 03, 2012

Facility Responsible:
2056 S. Alex Road
West Carrollton, OH 45449
937-866-1033

Digitally Signed By Sherry Caldarelli for
Date: December 04, 2012

Jim Beckner
Lab Manager

Revision 0

This certificate may not be reproduced except in full without the written approval of Transcat. Additional information if applicable may be included on separate report(s).

F0013B22 8/12/2011

THERMOCOUPLE CALIBRATIONS FOR SOURCE SAMPLING APPARATUS

CALIBRATION DATE _____ BY _____

FACILITY Esroc San Juan

UNIT NO _____ SERIAL NO. _____ Pb _____

CALIBRATED IN ICE WATER AND BOILING WATER USING A CMS PRECISION GLASS THERMOMETER NO. 229-054, ASTM NO. 63F FOR ICE WATER AND CMS NO. 229-088, ASTM NO. 66F FOR BOILING WATER.

TC	ICE WATER PRECISION	ICE WATER TC	BOILING WATER PRECISION	BOILING WATER TC
CONDENSOR THERMOCOUPLES				
C-1	32	32	212	212
C-2	32	32	212	212
C-3	32		212	
C-4	32	32	212	212
C-6	32	32	212	212
PROBE THERMOCOUPLES				
2P-1	32		212	
2P-2	32		212	
2P-3	32		212	
3P-1	32		212	
3P-2	32		212	
3P-3	32		212	
3P-4	32		212	
4P-1	32	32	212	211
4P-2	32	32	212	212
4P-3	32		212	
4P-4	32		212	
6P-1	32		212	
6P-2	32		212	
6P-3	32		212	
6P-4	32		212	
8P-1	32		212	
8P-2				
8P-3				

THERMOCOUPLE TEMPERATURES ARE READ ON THE DTI USED DURING TEST.
DTI CALIBRATED BY ALTEK 22 TC SOURCE S# 243783 PRIOR TO TC CAL.

THERMOCOUPLE CALIBRATIONS FOR SOURCE SAMPLING APPARATUS

CALIBRATION DATE _____ BY _____

UNIT NO _____ SERIAL NO. _____ Pb _____

CALIBRATED IN ICE WATER AND BOILING WATER USING A CMS PRECISION GLASS THERMOMETER NO. 229-054, ASTM NO. 63F FOR ICE WATER AND CMS NO. 229-088, ASTM NO. 66F FOR BOILING WATER.

	ICE WATER			BOILING WATER		
	TC	PRECISION	TC		PRECISION	TC
STACK THERMOCOUPLE						
12S-1		32			212	
PROBE THERMOCOUPLES						
12P-1		32			212	
12P-2		32			212	
12P-3		32			212	
METER THERMOCOUPLES - UNIT 001						
M-1		32	31		212	211
M-2		32	32		212	212
METER THERMOCOUPLES - UNIT 002						
M-1		32	32		212	212
M-2		32	32		212	212
METER THERMOCOUPLES - UNIT 003						
M-1		32			212	
M-2		32			212	
METER THERMOCOUPLES - UNIT 004						
M-1		32			212	
M-2		32			212	
METER THERMOCOUPLES - UNIT 15						
M-1		32			212	
M-2		32			212	
METER THERMOCOUPLES - UNIT 17						
M-1		32	32		212	212
M-2		32	32		212	212
METER THERMOCOUPLES - UNIT 18						
M-1		32			212	
M-2						

THERMOCOUPLE TEMPERATURES ARE READ ON THE DTI USED DURING TEST.
DTI CALIBRATED BY ALTEK 22 TC SOURCE S# 243783 PRIOR TO TC CAL.

THERMOCOUPLE CALIBRATIONS FOR SOURCE SAMPLING APPARATUS

CALIBRATION DATE _____ BY _____

UNIT NO _____ SERIAL NO _____ Pb _____

CALIBRATED IN ICE WATER AND BOILING WATER USING A CMS PRECISION GLASS THERMOMETER NO. 229-054, ASTM NO. 63F FOR ICE WATER AND CMS NO. 229-088, ASTM NO. 66F FOR BOILING WATER.

	ICE WATER			BOILING WATER		
TC	PRECISION	TC		PRECISION	TC	
OVEN THERMOCOUPLES						
O-3	32			212		
O-4	32			212		
O-5	32			212		
O-6	32			212		
O-7	32			212		
O-8	32	32		212	212	
O-9	32	32		212	212	
STACK THERMOCOUPLES	32			212		
2S-1	32			212		
2S-2	32			212		
2S-3	32			212		
3S-1	32			212		
3S-2	32			212		
3S-3	32			212		
4S-1	32	32		212	212	
4S-2	32	32		212	212	
4S-3	32			212		
6S-1	32			212		
6S-2	32			212		
6S-3	32			212		
6S-4	32			212		
8S-1	32			212		
8S-2						
8S-3						

THERMOCOUPLE TEMPERATURES ARE READ ON THE DTI USED DURING TEST.
DTI CALIBRATED BY ALTEK 22 TC SOURCE S# 243783 PRIOR TO TC CAL.

Pitot Tube Inspection

Client: CSROC

Date: 5-8-13

Probe/Pitot Number	4-P1	A (Pa + Pb)	1.714
Level and Perpendicular	yes	Zs= A tan Y (< 0.125")	.055
Obstruction?	no	Ws= A tan 0 (< 0.03125")	0
Damaged?	no	D_t (0.1875" < D_t < 0.375")	.376
a_1 (-10° < a_1< +10°)	0	P_a (1.05 D_t < P_a < 1.5 D_t)	.560
a_2 (-10° < a_2< +10°)	0	P_b (1.05 D_t < P_b < 1.5 D_t)	.5521
b_1 (-5° < b_1< +5°)	0	Pa = Pb ± 0.063"	.006
b_2 (-5° < b_2< +5°)	0		

Probe Minimum Interferences

Y (>= 3.0")	3.296	D_n	
X (> .75")	1.35	X /D_n (>= 1.5")	
Zp (>= .75")	.76		

Pa	Distance between where pitots adjoin to tip of pitot (Must be between 1.05 & 1.50 times O.D. of tubing)
Pb	Distance between where pitots adjoin to tip of pitot (Must be between 1.05 & 1.50 times O.D. of tubing)
Dt	Diameter of pitot tube (0.375 inches on all pitots)
Zs	Distance between the tip of the impact and static line along the length of the pitot (Must be <1/8 inch(0.1250))
Ws	Spacing between Pitot tubes where welded together (Must be <1/32 inch (0.0313))
a1	Angle across opening of Pitot tube from side to side or perpendicular to length of probe (Must be <10 Deg)
a2	Angle across opening of Pitot tube from side to side or perpendicular to length of probe (Must be <10 Deg)
b1	Angle across opening of Pitot tube from side to side or perpendicular to length of probe (Must be <5 Deg)
b2	Angle across opening of Pitot tube from side to side or perpendicular to length of probe (Must be <5 Deg)
X	Distance between side of nozzle and side of pitot tube (Must be >3/4 inch)
Zp	Distance from center of pitot opening back to tip of thermal couple (Must be >=3/4 inch (0.75))
Y	Distance from center of pitot opening back to probe (Must be >=3 inches)

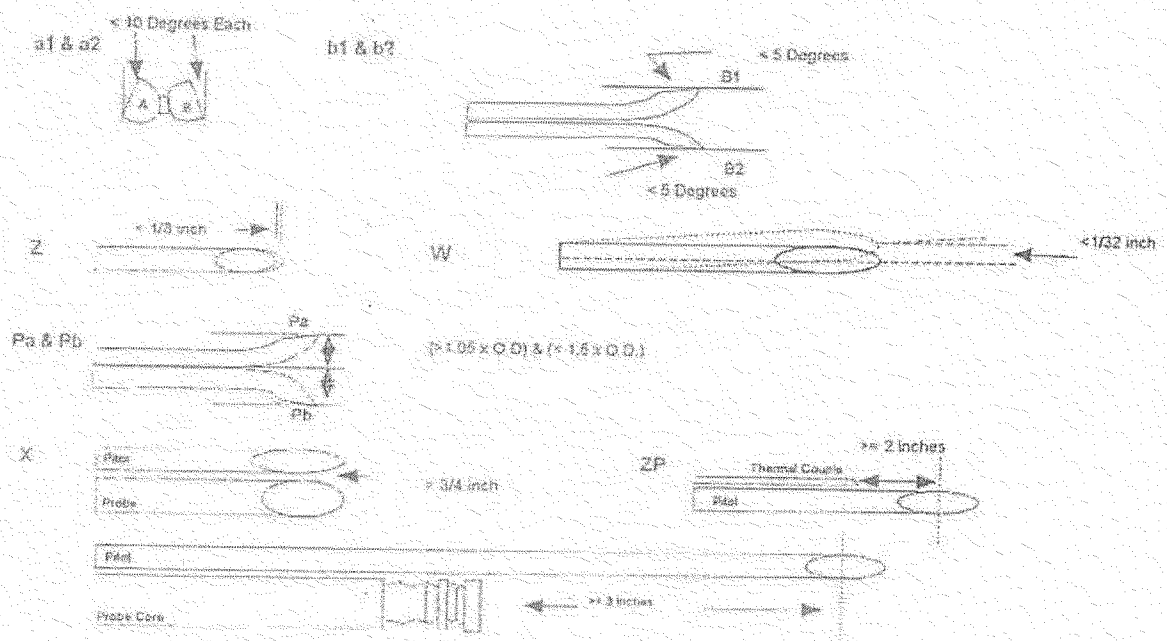

Pitot Tube Inspection

Client: EsroC

Date: 5-8-13

Probe/Pitot Number	4-P2	A (Pa + Pb)	1.10
Level and Perpendicular	yes	Zs= A tan Y (< 0.125")	.093
Obstruction?	no	Ws= A tan 0 (< 0.03125")	0
Damaged?	no	D_t (0.1875" < D_t < 0.375")	.375
a_1 (-10° < a_1< +10°)	0	P_a (1.05 D_t < P_a < 1.5 D_t)	.55
a_2 (-10° < a_2< +10°)	0	P_b (1.05 D_t < P_b < 1.5 D_t)	.55
b_1 (-5° < b_1< +5°)	0	Pa = Pb ± 0.063"	.00
b_2 (-5° < b_2< +5°)	0		

Probe Minimum Interferences

Y (>= 3.0")	3.536	D_n	
X (> .75")	1.03	X /D_n (>= 1.5")	
Zp (>= .75")	.752		

Pa	Distance between where pitots adjoin to tip of pitot (Must be between 1.05 & 1.50 times O.D. of tubing)
Pb	Distance between where pitots adjoin to tip of pitot (Must be between 1.05 & 1.50 times O.D. of tubing)
Dt	Diameter of pitot tube (0.375 inches on all pitots)
Zs	Distance between the tip of the impact and static line along the length of the pitot (Must be <1/8 inch(0.1250))
Ws	Spacing between Pitot tubes where welded together (Must be <1/32 inch (0.0313))
a1	Angle across opening of Pitot tube from side to side or perpendicular to length of probe (Must be <10 Deg)
a2	Angle across opening of Pitot tube from side to side or perpendicular to length of probe (Must be <10 Deg)
b1	Angle across opening of Pitot tube from side to side or perpendicular to length of probe (Must be <5 Deg)
b2	Angle across opening of Pitot tube from side to side or perpendicular to length of probe (Must be <5 Deg)
X	Distance between side of nozzle and side of pitot tube (Must be >3/4 inch)
Zp	Distance from center of pitot opening back to tip of thermal couple (Must be >=3/4 inch (0.75))
Y	Distance from center of pitot opening back to probe (Must be >=3 inches)

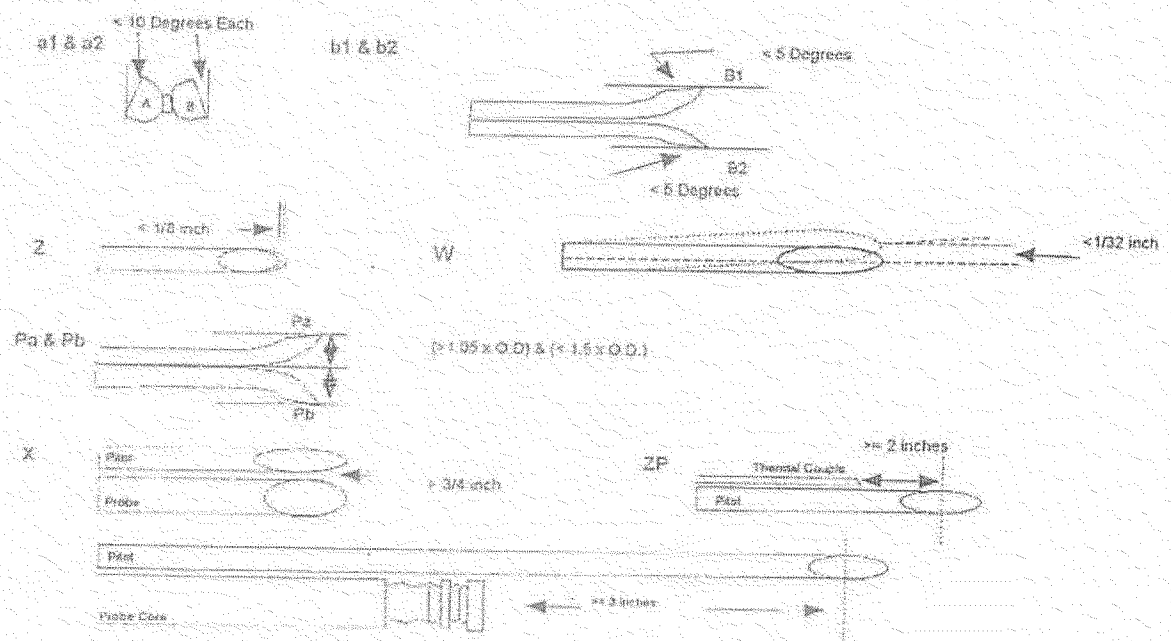

BRECHBUHLER SCALES, INC. An ISO Company

SCALE INSPECTION REPORT

518732

FOR CUSTOM STACK 593P - COD

14614 CENFIELD ST ALLIANCE OH 44601

P.O. _____ DATE 4-9-13

- ❑ 14941 Liberty Hi Rd. **BOWLING GREEN**, OH 43402 419-354-2030
- ❑ 1414 Scale St. S.W. **CANTON**, OH 44706-3096 330-453-2424
- ❑ 7550 Jacks Lane **CLAYTON**, OH 45315 937-832-2040
- ❑ 520 Brookpark Rd. **CLEVELAND**, OH 44109-5898 216-661-2660
- ❑ 4070 Perimeter Dr. **COLUMBUS**, OH 43228 614-274-9009
- ❑ 1001 Findlay Rd. **LIMA**, OH 45801 419-228-5021
- ❑ 1080 National Parkway **MANSFIELD**, OH 44906 419-529-3006
- ❑ 9914 Crescent Park Drive **WEST CHESTER**, OH 45069 513-777-5800
- ❑ 4005 South Ave. **YOUNGSTOWN**, OH 44512 330-259-0414
- ❑ 980 South Marr Rd. **COLUMBUS**, IN 47201 812-372-8374
- ❑ 3306 Cavalier Dr. **FORT WAYNE**, IN 46808 260-496-8469
- ❑ 5525 Galaeo Court **INDIANAPOLIS**, IN 46241 317-548-7821
- ❑ 5200 Grand Avenue **PITTSBURGH**, PA 15225 412-299-7960
- ❑ 477 North Pike Rd. **SARVER**, PA 16055 724-224-7180
- ❑ 526 31st St. **PARKERSBURG**, WV 26101 304-428-1792
- ❑ 100 McJunkin Road **NITRO**, WV 25143 304-755-0686

TEST WEIGHTS USED ARE CERTIFIED TO COMPLY WITH STANDARD MASSES, AND ARE NIST TRACEABLE.

STATE OF OHIO TRACEABLE TO NIST CALIBRATION LAB TEST REPORT NO. 2013-024

WEIGHT S/N'S GRAM # 33

SCALE TECHNICIAN: BRIAN JONES (SIGNATURE)

ACCEPTED BY: Adam Bell (SIGNATURE)

PARTS USED

TAG NO.	MFG	MOD NO.	S/N	LOC.	CAP.	GRAD. SIZE	NORM RNG	CAL FRQ.	CLEAN TEST	CAL STICK	NEXT CAL
-	SARTORIUS	A2005	39080133	LAB	100 GM g	0.1 g	HI - g / LO - g	6 Months	YES	YES ✓ / NO	10-13

	WGHT USED	AS FOUND	DEV.	TOL. +/-	ADJUSTED	AS LEFT	COMMENTS
1	10g	10.0	Ø	+/- 2%	YES / NO	10.0	
2	20g	20.0	Ø	+/- 2%	YES / NO	20.0	PAID IN FULL $153.48
3	50g	50.0	Ø	+/- 2%	YES / NO	50.0	CHECK # 10618
4	100g	100.2	+.2	+/- 2%	YES / NO	100.2	CUSTOMER TO BRING THE SCOUT PRO
5	g				YES / NO		TO BSI & HAVE TESTED.
6	g				YES / NO		

PARTS USED

The above indicated equipment has been tested/calibrated by Brechbuhler Scales, Inc in conformance to ISO 9001 and ANSI/NCSL Z540.

THIS REPORT SHALL NOT BE REPRODUCED EXCEPT IN FULL, WITHOUT THE WRITTEN APPROVAL FROM BRECHBUHLER SCALES, INC.

ED_001341_00000638-00082

BRECHBUHLER SCALES, INC. An ISO Company

SCALE INSPECTION REPORT

Contact: Jim Gray
330.821.2696

FOR CUSTOM STACK 593P - COD

14614 CENFIELD ST ALLIANCE OH 44601

518731

P.O. _____ DATE 4-9-13

- ☐ 14941 Liberty Hi Rd. BOWLING GREEN, OH 43402 419-354-2030
- ☐ 1414 Scale St. S.W. CANTON, OH 44706-3096 330-453-2424
- ☐ 7550 Jacks Lane CLAYTON, OH 45315 937-832-2040
- ☐ 520 Brookpark Rd. CLEVELAND, OH 44109-5898 216-661-2660
- ☐ 4070 Perimeter Dr. COLUMBUS, OH 43228 614-274-9009
- ☐ 1001 Findlay Rd. LIMA, OH 45801 419-228-5021
- ☐ 1080 National Parkway MANSFIELD, OH 44906 419-529-3006
- ☐ 9914 Crescent Park Drive WEST CHESTER, OH 45069 513-777-5800
- ☐ 4005 South Ave. YOUNGSTOWN, OH 44512 330-259-0414
- ☐ 980 South Marr Rd. COLUMBUS, IN 47201 812-372-8374
- ☐ 3306 Cavalier Dr. FORT WAYNE, IN 46808 260-496-8469
- ☐ 5525 Galaec Court INDIANAPOLIS, IN 46241 317-546-7821
- ☐ 5200 Grand Avenue PITTSBURGH, PA 15225 412-299-7960
- ☐ 477 North Pike Rd. SARVER, PA 16055 724-224-7180
- ☐ 526 31st St. PARKERSBURG, WV 26101 304-428-1792
- ☐ 100 McJunkin Road NITRO, WV 25143 304-755-0686

TEST WEIGHTS USED ARE CERTIFIED TO COMPLY WITH STANDARD MASSES, AND ARE NIST TRACEABLE.

STATE OF OHIO TRACEABLE TO NIST CALIBRATION LAB TEST REPORT NO. 2013-024

WEIGHT S/N'S GRAM #33

SCALE TECHNICIAN: BRIAN JONES (SIGNATURE)

ACCEPTED BY: Adam Beo (SIGNATURE)

PARTS USED

TAG NO.	MFG	MOD NO.	S/N	LOC.	CAP.	GRAD. SIZE	NORM RNG	CAL FRQ	CLEAN TEST	CAL STICK	NEXT CAL
	OHAUS	ADVENTUR ER	1203240794	LAB	4100 g	1 g	HI - g LO - g	6 Months	YES	YES ✓ NO	10-13

	WGHT USED	AS FOUND	DEV.	TOL. +/-	ADJUSTED	AS LEFT	COMMENTS
1	10g	10.0	Ø	+/- 2%	YES / (NO)	10.0	
2	20g	20.0	Ø	+/- 2%	YES / (NO)	20.0	
3	50g	50.0	Ø	+/- 2%	YES / (NO)	50.0	
4	100g	100.0	Ø	+/- 2%	YES / (NO)	100.0	
5	1kg	999.9	-.1	+/- 2%	YES / (NO)	999.9	
6	2kg	1999.9	-.1	+/- 2%	YES / (NO)	1999.9	

PARTS USED

The above indicated equipment has been tested/calibrated by Brechbuhler Scales, Inc. in conformance to ISO 9001 and ANSI/NCSL Z540.

THIS REPORT SHALL NOT BE REPRODUCED EXCEPT IN FULL, WITHOUT THE WRITTEN APPROVAL FROM BRECHBUHLER SCALES, INC.

ED_001341_00000638-00083

BRECHBUHLER SCALES, INC. An ISO Company

SCALE INSPECTION REPORT

518733

FOR CUSTOM STACK 593P - COD

14614 CENFIELD ST ALLIANCE OH 44601

P.O. _____ DATE 4-17-13

- ☐ 14941 Liberty Hi Rd. BOWLING GREEN, OH 43402 419-354-2030
- ☐ 1414 Scale St. S.W. CANTON, OH 44706-3096 330-453-2424
- ☐ 7550 Jacks Lane CLAYTON, OH 45315 937-832-2040
- ☐ 520 Brookpark Rd. CLEVELAND, OH 44109-5898 216-661-2660
- ☐ 4070 Perimeter Dr. COLUMBUS, OH 43228 614-274-9009
- ☐ 1001 Findlay Rd. LIMA, OH 45801 419-228-5021
- ☐ 1080 National Parkway MANSFIELD, OH 44906 419-529-3006
- ☐ 9914 Crescent Park Drive WEST CHESTER, OH 45069 513-777-5800
- ☐ 4005 South Ave. YOUNGSTOWN, OH 44512 330-259-0414
- ☐ 980 South Marr Rd. COLUMBUS, IN 47201 812-372-8374
- ☐ 3306 Cavalier Dr. FORT WAYNE, IN 46808 260-496-8469
- ☐ 5525 Galaeo Court INDIANAPOLIS, IN 46241 317-548-7821
- ☐ 5200 Grand Avenue PITTSBURGH, PA 15225 412-299-7960
- ☐ 477 North Pike Rd. SARVER, PA 16055 724-224-7180
- ☐ 526 31st St. PARKERSBURG, WV 26101 304-428-1792
- ☐ 100 McJunkin Road NITRO, WV 25143 304-755-0686

TEST WEIGHTS USED ARE CERTIFIED TO COMPLY WITH STANDARD MASSES, AND ARE NIST TRACEABLE.

STATE OF Ohio TRACEABLE TO NIST CALIBRATION LAB TEST REPORT NO. 2013-118

WEIGHT S/N'S 22 KIT

SCALE TECHNICIAN: Bob B. BSI 328 (SIGNATURE)

ACCEPTED BY: Adam Pud (SIGNATURE)

PARTS USED

TAG NO.	MFG	MOD NO.	S/N	LOC.	CAP.	GRAD. SIZE	NORM RNG	CAL FRQ	CLEAN TEST	CAL STICK	NEXT CAL
-	SCOUT PR	SP2001	7124111434	LAB	2000 G --	.1 G --	HI --	6 Months	Yes	YES ✓	10
	O OHAUS	-	-				LO --			NO	2013

	WGHT USED	AS FOUND	DEV.	TOL. +/-	ADJUSTED	AS LEFT	COMMENTS
1	500	498.6		+/- 2%	YES (NO)	499.6	AC Adapter has no output, used
2	1000	998.7		+/- 2%	(YES) NO	1000.0	Shop AC adapter to test and calibrate,
3	1500	1498.9		+/- 2%	YES / (NO)	1500.2	Scale is not linear, but in tolerance.
4	2000	1999.1		+/- 2%	(YES) NO	2000.1	Subplatter will not lock in place.
5					YES / NO		Load cell shipping lock will not function.
6					YES / NO		Box will not shut with adapter inside with scale.

PARTS USED

The above indicated equipment has been tested/calibrated by Brechbuhler Scales, Inc. in conformance to ISO 9001 and ANSI/NCSL Z540.

THIS REPORT SHALL NOT BE REPRODUCED EXCEPT IN FULL, WITHOUT THE WRITTEN APPROVAL FROM BRECHBUHLER SCALES, INC.

ED_001341_00000638-00084

C.S.A. Co.

STACK SAMPLER CALIBRATION SHEET

Customer _____ Order No. _____

Date 07/13/12 Serial No. 2 CSA Unit No. 2

Pump OK Pump Oil CHNG Clean Quick Disconnects YES

Maometers OK Dry Test Meter OK Thermometers SEE CAL SHT

Lights OK Electrical Check OK Variac OK

Vacuum Guage OK Leak Check @ 25 " Hg Vacuum NO LEAKS

Remarks 8.5" NO LEAKS

Barometer (Pb) 29.05

K	N	DH	CFw	CFd	Tw	Itd	Otd	TD	t	H	Y
0.0158	0.0368	0.5	5	4.90	60	60	60	60	12.52	1.773	1.001
0.0317	0.0737	1.0	5	4.80	60	60	60	60	8.99	1.834	1.020
0.0634	0.1470	2.0	10	9.76	60	60	60	60	12.75	1.845	1.001
0.1268	0.2490	4.0	10	9.79	60	60	60	60	8.91	1.802	0.995
0.1902	0.4310	6.0	10	9.80	60	60	60	60	7.12	1.726	0.987
0.2536	0.5880	8.0	10	9.90	60	60	60	60	6.23	1.762	0.972

Tolerances H = 1.6 - 1.84 -2.1 , Y = 0.99 - 1.00 - 1.01

$H = (K / Pb (Otd + 460))) * (((Tw + 460) t) / CFw)^2$

Delta H 1.790

$Y = (CFw\ Pb (Td\ avg. + 460)) / (CFd (Pb + N) (Tw + 460))$ Y: 0.996

DH = Orifice pressure drop - in. H20

CFw= Volume wet test meter - F^3

CFd= Volume dry test meter - F^3

Tw= Temp. wet test meter

Itd= Inlet temperature dry test meter

Otd= Outlet temperature dry test meter

Td avg. = Averagetemperature dry test meter

t= Time - minutes

Pb= Barometer press.

DIAL THERMOMETER CALIBRATION		ICE WATER		BOILING WATER	
Precision Lab Thermometer		0		0	
Meter Thermometers		ITd 0	OTd 0	ITd 0	OTd 0
Impinger Outlet Thermometer	(1)	0		0	
	(2)	0		0	

STACK DIGITAL TEMPERATURE INDICATORS

NBS TRACABLE FROM FACTORY. 2 UNITS CALIBRATEDAGAINST EACH OTHERPyroMation

ALL THERMOCOUPLES ARE CALIBRATED BY OVEN FROM 100 TO 500F AGAINST A CMS LAB THERMOMETER (No. 227-934). ANY THERMOCOUPLE THAT IS MORE THAN ±2% FROM STANDARD IS DISCARDED.

Appendix #4

CEMS Data

Facility N am e:
ESSR O C San Juan
Location:
San Juan

2013 A udit

Source: B aghouse 2

D ate/Tim e	O 2 D ry %	C O 2 %	SO 2 ppm	N O x ppm	SO 2 lb/hr	N O x lb/hr	flow dkscfm	C O lb/hr	H 2O %	
05/09/13 18:00:45	14.94	9.36	25.6	206.4	27.4	159.0	107.5	184.5	0.33	
05/09/13 18:01:44	14.91	9.36	24.4	209.1	26.1	160.6	107.2	164.5	0.67	
05/09/13 18:02:45	15.08	9.29	21.8	212.9	23.0	161.8	106.1	161.4	1.46	
05/09/13 18:03:44	15.01	9.38	21.7	212.1	23.2	163.0	107.3	140.4	0.00	
05/09/13 18:04:44	15.06	9.25	21.7	218.4	23.2	168.0	107.4	100.1	1.13	
05/09/13 18:05:47	15.09	9.25	21.4	218.3	22.6	165.9	106.1	100.9	1.33	
05/09/13 18:06:45	14.98	9.35	20.9	221.6	22.4	170.8	107.6	99.8	0.80	
05/09/13 18:07:44	15.06	9.29	19.7	223.3	20.8	169.7	106.1	128.9	1.39	
05/09/13 18:08:49	15.15	9.25	20.1	214.3	21.4	163.8	106.7	166.6	1.32	
05/09/13 18:09:45	15.16	9.24	19.9	215.1	20.9	162.7	105.6	137.1	2.24	
05/09/13 18:10:44	15.13	9.34	19.6	216.0	20.6	163.1	105.4	123.4	1.78	
05/09/13 18:11:43	15.16	9.31	19.6	214.4	20.5	161.3	105.0	122.1	2.31	
05/09/13 18:12:49	15.09	9.26	19.0	203.6	20.0	153.9	105.5	164.2	1.72	
05/09/13 18:13:47	15.02	9.33	18.5	204.9	19.6	156.5	106.6	140.3	0.87	
05/09/13 18:14:46	15.06	9.27	18.5	206.1	19.9	159.5	108.0	129.8	1.20	
05/09/13 18:15:44	15.06	9.26	18.5	206.3	20.4	163.5	110.6	126.4	1.73	
05/09/13 18:16:49	15.15	9.08	17.5	204.1	18.9	158.2	108.2	101.5	5.02	
05/09/13 18:17:43	15.24	8.91	9.7	194.6	10.4	150.4	107.9	163.3	6.63	
05/09/13 18:18:43	15.20	8.92	5.8	192.2	6.4	152.7	110.9	201.5	6.32	
05/09/13 18:19:49	15.28	8.88	2.8	198.1	3.1	158.1	111.4	156.1	6.41	
05/09/13 18:20:48	15.31	8.79	2.2	198.3	2.4	158.1	111.3	170.0	6.27	
	15.10	9.21	17.6	209.1	18.7	161.0	107.5	142.0	2.43	Run 1 Avg

D ate/Tim e	O 2 D ry %	C O 2 %	SO 2 ppm	N O x ppm	SO 2 lb/hr	N O x lb/hr	flow dkscfm	C O lb/hr	H 2O %	
05/09/13 18:40:49	15.86	8.00	-0.1	182.9	-0.1	159.1	121.4	143.1	7.31	
05/09/13 18:41:48	15.74	8.06	-0.1	178.9	-0.1	155.7	121.5	159.9	7.05	
05/09/13 18:42:44	15.73	8.14	-0.1	176.4	-0.1	154.2	122.0	200.0	6.29	
05/09/13 18:43:49	15.79	8.07	-0.1	177.2	-0.1	156.3	123.1	154.7	6.08	
05/09/13 18:44:49	15.86	8.00	-0.1	183.3	-0.1	161.8	123.2	114.4	6.24	
05/09/13 18:45:48	15.98	7.89	-0.1	183.3	-0.1	159.7	121.6	82.6	7.32	
05/09/13 18:46:46	15.95	7.85	-0.1	182.5	-0.1	158.3	121.1	101.5	7.90	
05/09/13 18:47:49	15.81	7.96	-0.1	177.6	-0.1	154.0	121.0	158.5	7.84	
05/09/13 18:48:48	15.84	8.07	-0.1	167.9	-0.1	145.5	121.0	231.1	7.13	
05/09/13 18:49:50	15.84	8.15	-0.1	165.8	-0.1	144.9	122.0	232.7	6.76	
05/09/13 18:50:44	15.79	8.00	-0.1	174.1	-0.1	152.7	122.4	157.9	6.33	
05/09/13 18:51:49	15.91	7.84	-0.1	176.3	-0.1	153.0	121.1	143.6	7.92	
05/09/13 18:52:48	15.98	7.87	-0.1	175.3	-0.1	149.8	119.3	182.2	8.76	
05/09/13 18:53:47	15.79	7.97	-0.1	167.9	-0.1	146.4	121.7	292.1	7.66	
05/09/13 18:54:46	15.83	8.01	-0.1	166.9	-0.1	145.8	121.9	273.1	7.01	
05/09/13 18:55:45	15.84	8.00	-0.1	171.5	-0.1	150.5	122.5	177.0	6.50	
05/09/13 18:56:49	15.93	7.79	-0.1	173.6	-0.1	152.5	122.6	155.4	7.16	
05/09/13 18:57:47	16.01	7.78	-0.1	174.7	-0.1	151.2	120.8	144.7	8.49	
05/09/13 18:58:45	15.94	7.83	-0.1	170.5	-0.1	147.8	121.0	228.7	8.53	
05/09/13 18:59:49	15.86	8.00	-0.1	166.7	-0.1	145.9	122.2	320.3	7.31	
05/09/13 19:00:48	15.78	8.05	-0.1	167.4	-0.1	147.1	122.7	280.9	7.10	
	15.76	8.11	-0.1	180.2	-0.1	155.1	120.3	164.8	6.88	Run 2 Avg

D ate/Tim e	O 2 D ry %	C O 2 %	SO 2 ppm	N O x ppm	SO 2 lb/hr	N O x lb/hr	flow dkscfm	C O lb/hr	H 2O %	
05/09/13 19:23:45	15.88	7.96	-0.1	148.2	-0.1	129.0	121.5	280.9	8.82	
05/09/13 19:24:48	15.83	8.05	-0.1	146.4	-0.1	128.2	122.2	335.0	8.21	
05/09/13 19:25:45	15.73	8.15	-0.1	153.6	-0.1	137.2	124.7	241.0	6.74	
05/09/13 19:26:47	15.81	7.98	-0.1	161.7	-0.1	143.5	123.9	139.1	7.59	
05/09/13 19:27:45	15.93	7.91	-0.1	163.1	-0.1	144.5	123.7	143.0	7.66	
05/09/13 19:28:50	15.88	7.81	-0.1	163.4	-0.1	141.1	120.5	135.9	4.79	
05/09/13 19:29:50	16.03	7.65	-0.1	161.3	-0.1	130.5	112.9	156.7	8.30	
05/09/13 19:30:49	15.63	8.47	-0.1	171.5	-0.1	143.5	116.8	223.9	3.52	
05/09/13 19:31:48	15.46	8.51	-0.1	170.3	-0.1	145.1	118.9	184.4	0.97	
05/09/13 19:32:41	15.66	8.19	-0.1	168.6	-0.1	143.3	118.6	120.6	1.47	
05/09/13 19:33:46	15.83	7.98	-0.1	169.2	-0.1	141.5	116.7	91.4	2.65	
05/09/13 19:34:41	15.96	7.93	-0.1	168.8	-0.1	137.5	113.7	101.9	4.20	
05/09/13 19:35:46	15.79	8.11	-0.1	170.1	-0.1	137.5	112.8	166.0	4.50	
05/09/13 19:36:45	15.58	8.26	-0.1	168.2	-0.1	134.4	111.5	277.6	3.98	
05/09/13 19:37:49	15.38	8.32	-0.1	165.8	-0.1	135.9	114.4	326.4	1.76	
05/09/13 19:38:48	15.38	8.45	-0.1	168.9	-0.1	136.5	112.8	289.7	7.80	
05/09/13 19:39:45	15.73	8.35	-0.1	167.7	-0.1	137.6	114.5	309.6	7.69	
05/09/13 19:40:48	15.48	8.41	-0.1	171.5	-0.1	140.1	114.0	340.9	9.17	
05/09/13 19:41:41	15.59	8.43	-0.1	171.4	-0.1	137.4	111.9	310.6	11.29	
05/09/13 19:42:46	15.49	8.50	-0.1	164.7	-0.1	136.5	115.7	435.2	9.94	
05/09/13 19:43:45	15.51	8.59	-0.1	171.3	-0.1	144.1	117.4	362.5	8.96	
	15.80	8.19	-0.1	165.0	-0.1	138.3	117.1	236.8	6.19	Run 3 Avg

D ate/Tim e	O 2 D ry %	C O 2 %	SO 2 ppm	N O x ppm	SO 2 lb/hr	N O x lb/hr	flow dkscfm	C O lb/hr	H 2O %	
05/09/13 20:05:48	15.81	7.95	-0.1	174.1	-0.1	151.3	121.3	253.9	7.72	
05/09/13 20:06:46	15.81	7.90	-0.1	171.3	-0.1	150.2	122.4	220.1	6.70	
05/09/13 20:07:44	15.91	7.78	-0.1	174.6	-0.1	149.7	119.7	141.6	7.04	
05/09/13 20:08:48	16.01	7.56	-0.1	163.0	-0.1	133.8	114.6	224.0	7.31	
05/09/13 20:09:46	16.06	7.91	-0.1	163.2	-0.1	127.6	109.1	278.3	8.53	
05/09/13 20:10:49	15.63	8.42	-0.1	172.7	-0.1	137.2	110.9	285.9	4.22	
05/09/13 20:11:46	15.41	8.43	-0.1	165.3	-0.1	130.7	110.4	335.7	2.27	
05/09/13 20:12:48	15.58	8.31	-0.1	170.5	-0.1	130.8	107.1	252.1	4.11	
05/09/13 20:13:45	15.56	8.42	-0.1	178.0	-0.1	135.6	106.3	197.2	4.50	
05/09/13 20:14:48	15.56	8.44	-0.1	172.9	-0.1	130.3	105.2	311.2	5.01	
05/09/13 20:15:50	15.49	8.50	-0.1	171.8	-0.1	129.7	105.4	342.1	4.52	
05/09/13 20:16:49	15.48	8.59	-0.1	171.3	-0.1	129.6	105.6	349.9	4.20	
05/09/13 20:17:48	15.44	8.65	-0.1	176.8	-0.1	135.7	107.1	334.0	3.69	
05/09/13 20:18:46	15.40	8.62	-0.1	178.4	-0.1	142.2	111.3	325.8	2.86	
05/09/13 20:19:46	15.48	8.47	-0.1	176.4	-0.1	141.2	111.7	347.0	4.84	
05/09/13 20:20:47	15.64	8.27	-0.1	171.9	-0.1	143.2	116.3	310.2	8.12	
05/09/13 20:21:44	15.81	8.10	-0.1	167.9	-0.1	137.1	114.0	323.7	9.49	
05/09/13 20:22:45	15.72	8.03	-0.1	165.3	-0.1	138.3	116.8	433.0	8.27	
05/09/13 20:23:44	15.79	8.00	-0.1	169.4	-0.1	141.5	116.6	396.4	8.87	
05/09/13 20:24:49	15.79	7.94	-0.1	171.3	-0.1	143.2	116.7	384.6	8.68	
05/09/13 20:25:48	15.84	8.01	-0.1	178.6	-0.1	147.7	115.4	307.5	9.60	
	15.68	8.20	-0.1	171.7	-0.1	138.4	112.6	302.6	6.22	Run 4 Avg

Date/Time	O2 Dry %	CO2 %	SO2 ppm	NOx ppm	SO2 lb/hr	NOx lb/hr	flow dkscfm	CO lb/hr	H2O %	
05/09/13 20:49:47	15.51	8.42	-0.1	194.5	-0.1	150.3	107.9	331.8	2.77	
05/09/13 20:50:48	15.48	8.45	-0.1	200.4	-0.1	155.6	108.4	300.4	0.00	
05/09/13 20:51:44	15.48	8.45	-0.1	200.4	-0.1	155.6	108.4	300.4	0.00	
05/09/13 20:52:44	15.48	8.45	-0.1	200.4	-0.1	155.6	108.4	300.4	0.00	
05/09/13 20:53:49	15.48	8.45	-0.1	200.4	-0.1	155.6	108.4	300.4	0.00	
05/09/13 20:54:48	15.48	8.45	-0.1	200.4	-0.1	155.6	108.4	300.4	0.00	
05/09/13 20:55:41	15.48	8.45	-0.1	200.4	-0.1	155.6	108.4	300.4	0.00	
05/09/13 20:56:46	15.48	8.45	-0.1	200.4	-0.1	155.6	108.4	300.4	0.00	
05/09/13 20:57:45	15.48	8.45	-0.1	200.4	-0.1	155.6	108.4	300.4	0.00	
05/09/13 20:58:44	15.48	8.45	-0.1	200.4	-0.1	155.6	108.4	300.6	0.00	
05/09/13 20:59:48	15.61	8.32	1.1	194.2	1.2	156.7	112.6	330.1	0.00	
05/09/13 21:00:42	15.74	8.05	3.5	182.9	4.2	156.2	119.2	411.7	7.31	
05/09/13 21:01:48	15.81	8.04	2.8	194.3	3.3	165.5	118.9	288.7	7.72	
05/09/13 21:02:47	15.93	7.99	2.1	199.3	2.5	168.3	117.9	245.3	8.66	
05/09/13 21:03:46	15.91	7.98	1.8	196.8	2.1	163.8	116.2	247.1	9.87	
05/09/13 21:04:46	15.84	7.93	1.2	176.4	1.4	149.0	117.9	444.7	9.28	
05/09/13 21:05:46	15.76	8.00	0.6	176.3	0.7	150.3	119.0	464.1	7.61	
05/09/13 21:06:51	15.79	8.00	0.4	193.8	0.5	165.8	119.4	307.7	7.47	
05/09/13 21:07:44	15.88	7.93	0.3	205.1	0.4	174.7	118.9	212.3	8.31	
05/09/13 21:08:44	15.93	7.87	0.2	200.1	0.2	170.9	119.2	255.8	7.85	
05/09/13 21:09:49	15.98	7.84	-0.1	210.5	-0.1	178.2	118.2	174.8	9.07	
	15.67	8.21	0.6	196.6	0.7	159.5	113.4	305.6	4.09	Run 5 Avg

Date/Time	O2 Dry %	CO2 %	SO2 ppm	NOx ppm	SO2 lb/hr	NOx lb/hr	flow dkscfm	CO lb/hr	H2O %	
05/09/13 21:32:47	16.06	7.82	-0.1	204.0	-0.1	170.7	116.8	264.2	11.02	
05/09/13 21:33:49	15.84	7.96	-0.1	198.7	-0.1	168.4	118.3	334.7	9.60	
05/09/13 21:34:44	15.81	7.92	-0.1	200.4	-0.1	171.8	119.7	311.9	8.73	
05/09/13 21:35:49	15.86	7.90	-0.1	207.2	-0.1	176.3	118.8	267.9	9.21	
05/09/13 21:36:47	15.89	7.92	-0.1	217.3	-0.1	181.2	116.4	237.9	9.82	
05/09/13 21:37:52	15.81	7.95	-0.1	214.2	-0.1	179.2	116.8	253.0	9.93	
05/09/13 21:38:43	15.79	8.00	-0.1	210.6	-0.1	175.9	116.6	280.6	9.82	
05/09/13 21:39:52	15.84	8.04	-0.1	206.0	-0.1	171.8	116.4	261.1	9.03	
05/09/13 21:40:43	15.83	7.94	-0.1	206.5	-0.1	173.1	117.0	214.7	9.41	
05/09/13 21:41:46	15.88	7.92	-0.1	208.8	-0.1	175.9	117.6	261.6	9.07	
05/09/13 21:42:45	15.89	7.91	-0.1	221.0	-0.1	185.7	117.3	206.1	9.00	
05/09/13 21:43:44	15.96	7.88	-0.1	228.9	-0.1	189.2	115.4	155.7	10.71	
05/09/13 21:44:43	16.06	7.96	-0.1	222.5	-0.1	183.5	115.1	223.7	11.39	
05/09/13 21:45:44	15.83	8.02	-0.1	208.8	-0.1	176.2	117.8	334.5	9.10	
05/09/13 21:46:47	17.84	4.84	1.9	134.5	2.0	100.3	104.1	132.4	19.73	
05/09/13 21:47:46	17.22	6.84	0.0	186.6	0.0	147.0	110.0	228.4	16.20	
05/09/13 21:48:47	15.99	7.63	-0.1	210.2	-0.1	178.1	118.3	217.2	9.32	
05/09/13 21:49:46	15.98	7.78	-0.1	213.6	-0.1	182.1	119.0	199.9	8.51	
05/09/13 21:50:46	16.02	7.78	-0.1	219.2	-0.1	186.2	118.6	133.0	9.55	
05/09/13 21:51:43	15.98	7.76	-0.1	222.4	-0.1	188.6	118.4	169.0	9.01	
05/09/13 21:52:47	15.93	7.68	-0.1	216.9	-0.1	184.3	118.6	193.8	8.91	
	16.06	7.69	0.0	207.5	0.0	173.6	116.5	232.4	10.34	Run 6 Avg

D ate/Tim e	O 2 D ry %	C O 2 %	SO 2 ppm	N O x ppm	SO 2 lb/hr	N O x lb/hr	flow dkscfm	C O lb/hr	H 2O %
05/09/13 22:16:48	15.73	8.31	-0.1	213.9	-0.1	166.1	108.4	234.6	5.34
05/09/13 22:17:48	15.44	8.41	-0.1	205.3	-0.1	165.8	112.7	332.8	1.94
05/09/13 22:18:44	15.68	8.26	-0.1	218.7	-0.1	170.9	109.1	193.3	4.21
05/09/13 22:19:48	15.66	8.26	-0.1	212.7	-0.1	171.0	112.2	231.6	3.19
05/09/13 22:20:46	15.78	8.27	0.2	217.1	0.2	178.2	114.6	187.2	2.41
05/09/13 22:21:43	15.81	8.13	0.6	221.9	0.7	180.6	113.6	132.7	3.48
05/09/13 22:22:46	15.98	7.97	1.0	219.0	1.1	176.5	112.5	170.1	4.19
05/09/13 22:23:44	15.83	8.04	1.4	220.2	1.6	179.7	113.9	167.0	3.16
05/09/13 22:24:48	15.89	7.99	2.5	217.5	2.8	172.8	110.9	205.3	6.73
05/09/13 22:25:48	15.89	8.08	2.9	212.1	3.2	167.4	110.2	268.4	8.50
05/09/13 22:26:47	15.78	8.19	2.9	219.5	3.2	173.9	110.6	235.5	8.62
05/09/13 22:27:46	15.68	8.21	2.9	215.7	3.2	169.7	109.8	206.1	9.76
05/09/13 22:28:45	15.74	8.27	2.2	214.8	2.4	170.3	110.7	293.2	10.04
05/09/13 22:29:45	15.68	8.28	1.5	211.7	1.7	170.2	112.2	318.0	9.44
05/09/13 22:30:44	15.71	8.27	1.1	219.1	1.2	177.5	113.1	257.5	8.59
05/09/13 22:31:48	15.73	8.17	0.9	224.4	1.0	182.8	113.7	235.6	8.71
05/09/13 22:32:53	15.94	8.13	0.3	220.8	0.3	178.7	113.0	369.4	9.28
05/09/13 22:33:44	15.84	8.07	0.1	222.5	0.1	181.2	113.7	300.8	9.28
05/09/13 22:34:44	15.81	7.96	-0.1	207.1	-0.1	169.9	114.5	408.2	8.92
05/09/13 22:35:44	15.79	8.00	-0.1	205.8	-0.1	170.3	115.5	393.1	7.66
05/09/13 22:36:43	15.78	7.95	-0.1	210.2	-0.1	175.0	116.2	312.5	7.86
	15.77	8.15	0.9	215.7	1.0	173.7	112.4	259.7	6.73

Run 7 Avg

D ate/Tim e	O 2 D ry %	C O 2 %	SO 2 ppm	N O x ppm	SO 2 lb/hr	N O x lb/hr	flow dkscfm	C O lb/hr	H 2O %
05/09/13 23:00:47	15.88	8.06	-0.1	187.1	-0.1	152.5	113.8	296.2	9.07
05/09/13 23:01:46	15.86	8.09	-0.1	188.3	-0.1	155.7	115.4	358.2	8.76
05/09/13 23:02:45	15.98	8.14	-0.1	188.7	-0.1	154.2	114.1	325.1	9.95
05/09/13 23:03:44	15.93	8.11	-0.1	191.1	-0.1	154.8	113.1	320.0	10.23
05/09/13 23:04:49	15.72	8.20	-0.1	185.9	-0.1	154.6	116.1	408.2	8.27
05/09/13 23:05:48	15.81	8.17	-0.1	189.9	-0.1	157.8	116.0	361.2	8.16
05/09/13 23:06:48	15.98	8.16	-0.1	190.9	-0.1	155.2	113.5	312.7	9.82
05/09/13 23:07:46	15.91	8.16	-0.1	192.8	-0.1	156.4	113.2	295.6	9.93
05/09/13 23:08:45	15.74	8.19	-0.1	186.6	-0.1	155.1	116.0	398.4	8.01
05/09/13 23:09:44	15.83	8.14	-0.1	187.7	-0.1	155.0	115.3	342.1	8.78
05/09/13 23:10:44	15.78	8.11	-0.1	188.4	-0.1	155.2	115.0	319.3	8.81
05/09/13 23:11:44	15.81	8.12	-0.1	184.9	-0.1	151.9	114.7	334.6	9.74
05/09/13 23:12:48	15.70	8.11	-0.1	173.9	-0.1	144.9	116.3	464.2	8.34
05/09/13 23:13:48	15.67	8.30	-0.1	180.6	-0.1	149.8	115.8	375.0	8.30
05/09/13 23:14:46	15.79	8.34	-0.1	181.7	-0.1	151.0	116.0	372.9	8.87
05/09/13 23:15:46	15.83	8.32	-0.1	183.8	-0.1	151.2	114.8	348.7	9.03
05/09/13 23:16:45	15.84	8.21	-0.1	186.5	-0.1	152.8	114.4	381.7	9.28
05/09/13 23:17:44	15.79	8.25	-0.1	191.4	-0.1	158.1	115.3	397.4	9.06
05/09/13 23:18:49	15.83	8.14	-0.1	188.1	-0.1	154.4	114.6	406.0	9.16
05/09/13 23:19:49	15.84	8.14	-0.1	183.0	-0.1	150.2	114.6	490.1	8.84
05/09/13 23:20:48	15.84	8.18	-0.1	188.1	-0.1	153.2	113.7	406.9	9.28
	15.83	8.17	-0.1	186.6	-0.1	153.5	114.8	367.4	9.03

Run 8 Avg

D ate/Tim e	O 2 D ry %	C O 2 %	SO 2 ppm	N O x ppm	SO 2 lb/hr	N O x lb/hr	flow dkscfm	C O lb/hr	H 2O %	
05/09/13 23:42:49	15.67	8.26	-0.1	194.4	-0.1	161.7	116.1	359.8	8.04	
05/09/13 23:43:48	15.73	8.19	-0.1	197.6	-0.1	161.9	114.4	317.1	9.03	
05/09/13 23:44:47	15.74	8.24	-0.1	200.0	-0.1	163.5	114.1	289.8	9.40	
05/09/13 23:45:48	15.79	8.20	-0.1	192.7	-0.1	158.2	114.6	379.3	9.44	
05/09/13 23:46:47	15.78	8.11	-0.1	183.8	-0.1	151.2	114.8	496.6	8.68	
05/09/13 23:47:46	15.69	8.10	-0.1	192.9	-0.1	159.8	115.6	417.0	8.48	
05/09/13 23:48:45	15.76	8.23	-0.1	201.6	-0.1	166.2	115.1	319.9	8.50	
05/09/13 23:49:46	15.81	8.19	-0.1	210.7	-0.1	171.5	113.6	208.1	9.30	
05/09/13 23:50:48	15.88	8.15	-0.1	209.4	-0.1	167.4	111.6	234.8	0.00	
05/09/13 23:51:47	15.88	8.15	-0.1	209.4	-0.1	167.4	111.6	234.8	0.00	
05/09/13 23:52:46	15.88	8.15	-0.1	209.4	-0.1	167.4	111.6	234.8	0.00	
05/09/13 23:53:47	15.88	8.15	-0.1	209.4	-0.1	167.4	111.6	234.8	0.00	
05/09/13 23:54:48	15.88	8.15	-0.1	209.4	-0.1	167.4	111.6	234.8	0.00	
05/09/13 23:55:47	15.88	8.15	-0.1	209.4	-0.1	167.4	111.6	234.8	0.00	
05/09/13 23:56:45	15.88	8.15	-0.1	209.4	-0.1	167.4	111.6	234.8	0.00	
05/09/13 23:57:49	15.88	8.15	-0.1	209.5	-0.1	167.5	111.6	234.8	0.00	
05/09/13 23:58:49	15.88	8.15	-0.1	209.6	-0.1	167.6	111.6	234.8	0.00	
05/09/13 23:59:46	15.78	8.22	-0.1	208.3	-0.1	166.8	111.8	298.8	0.00	
05/10/13 00:00:46	15.64	8.33	-0.1	198.1	-0.1	159.5	112.4	456.8	8.70	
05/10/13 00:01:45	15.66	8.35	-0.1	198.4	-0.1	160.0	112.6	372.6	8.75	
05/10/13 00:02:48	15.71	8.35	-0.1	199.9	-0.1	161.1	112.5	283.4	9.23	
	15.79	8.20	-0.1	203.0	-0.1	164.2	113.0	300.6	4.65	Run 9 Avg

D ate/Tim e	O 2 D ry %	C O 2 %	SO 2 ppm	N O x ppm	SO 2 lb/hr	N O x lb/hr	flow dkscfm	C O lb/hr	H 2O %	
05/10/13 00:26:46	15.68	8.38	-0.1	198.1	-0.1	159.9	112.7	184.2	8.29	
05/10/13 00:27:45	15.76	8.38	-0.1	199.8	-0.1	159.9	111.7	173.7	8.95	
05/10/13 00:28:46	15.68	8.43	-0.1	194.8	-0.1	156.3	112.0	204.8	8.93	
05/10/13 00:29:49	15.64	8.48	-0.1	194.3	-0.1	157.2	112.9	195.1	7.35	
05/10/13 00:30:46	15.63	8.44	-0.1	199.5	-0.1	157.5	110.2	146.6	9.15	
05/10/13 00:31:49	15.63	8.48	-0.1	197.0	-0.1	156.7	111.0	207.7	8.64	
05/10/13 00:32:41	15.61	8.47	-0.1	196.3	-0.1	157.1	111.7	210.4	8.39	
05/10/13 00:33:45	15.64	8.50	-0.1	197.4	-0.1	156.4	110.6	164.0	8.82	
05/10/13 00:34:41	15.68	8.51	-0.1	197.7	-0.1	157.2	111.0	175.7	8.74	
05/10/13 00:35:46	15.69	8.48	-0.1	198.2	-0.1	158.0	111.3	179.0	8.80	
05/10/13 00:36:45	15.58	8.48	-0.1	198.3	-0.1	159.5	112.3	201.7	7.77	
05/10/13 00:37:44	15.61	8.45	-0.1	198.3	-0.1	159.0	111.9	206.8	7.94	
05/10/13 00:38:45	15.69	8.43	-0.1	201.2	-0.1	161.1	111.8	126.9	8.29	
05/10/13 00:39:48	15.69	8.31	-0.1	199.2	-0.1	155.8	109.2	160.8	9.88	
05/10/13 00:40:46	15.56	8.51	-0.1	187.6	-0.1	149.3	111.1	268.5	8.35	
05/10/13 00:41:49	15.48	8.57	-0.1	188.7	-0.1	154.1	114.0	243.5	6.65	
05/10/13 00:42:49	15.61	8.53	-0.1	194.9	-0.1	155.8	111.6	159.1	7.62	
05/10/13 00:43:46	15.66	8.51	-0.1	198.7	-0.1	159.0	111.7	101.3	7.98	
05/10/13 00:44:48	15.71	8.48	-0.1	197.3	-0.1	156.9	111.0	107.1	8.53	
05/10/13 00:45:46	15.61	8.47	-0.1	190.0	-0.1	151.0	110.9	152.4	8.78	
05/10/13 00:46:50	15.58	8.57	-0.1	186.7	-0.1	148.7	111.2	197.2	8.54	
	15.64	8.47	-0.2	195.9	-0.1	156.5	111.5	179.4	8.40	Run 10 Avg

Appendix #5

Reference Method Data

ESSROC San Juan
Baghouse #2 Outlet

CO Monitor Cal		Co2 Monitor Cal	
498	497.9	20.8	20.8
173	173	11.9	11.9
0	0	0	0

Nox Monitor Cal		o2 Monitor Cal	
667	666.9	21.2	21.2
303	302.9	10.2	10.2
0	0.1	0	0

CO PPM	NOX PPM	O2 %	CO2 %	Time Stamp	
314.59	211.60	15.32	9.82	5/9/2013 6:00:11 PM	Start Run 1
314.05	212.38	15.58	9.09	5/9/2013 6:01:16 PM	
315.16	215.83	15.51	9.73	5/9/2013 6:02:20 PM	
316.25	212.27	15.92	9.13	5/9/2013 6:03:25 PM	
310.47	210.61	15.48	9.77	5/9/2013 6:04:29 PM	
315.60	209.13	15.21	9.02	5/9/2013 6:05:34 PM	
314.36	210.36	15.04	9.26	5/9/2013 6:06:38 PM	
314.07	215.04	15.46	9.71	5/9/2013 6:07:43 PM	
309.28	215.41	15.07	9.27	5/9/2013 6:08:47 PM	
309.93	209.83	15.86	9.27	5/9/2013 6:09:52 PM	
311.33	209.78	15.76	9.19	5/9/2013 6:10:56 PM	
312.21	196.15	15.36	9.84	5/9/2013 6:12:01 PM	
313.63	180.48	15.88	9.20	5/9/2013 6:13:05 PM	
316.84	179.50	15.49	9.49	5/9/2013 6:14:10 PM	
310.75	197.03	15.05	9.88	5/9/2013 6:15:14 PM	
312.87	202.87	15.37	9.44	5/9/2013 6:16:19 PM	
315.19	196.47	15.99	8.42	5/9/2013 6:17:23 PM	
315.09	185.24	15.21	8.05	5/9/2013 6:18:28 PM	
310.04	192.15	15.91	8.29	5/9/2013 6:19:32 PM	
314.95	179.42	15.91	8.17	5/9/2013 6:20:37 PM	Stop Run 1
313.33	202.08	15.52	9.20		Avg
336.04	183.32	15.40	7.23	5/9/2013 6:39:58 PM	Start Run 2
302.64	201.10	15.28	7.99	5/9/2013 6:41:03 PM	
325.29	186.27	15.26	7.22	5/9/2013 6:42:07 PM	
332.64	192.10	15.52	7.83	5/9/2013 6:43:12 PM	
337.29	188.92	15.54	7.57	5/9/2013 6:44:16 PM	
331.55	189.48	15.26	7.16	5/9/2013 6:45:21 PM	
326.59	203.04	15.54	7.52	5/9/2013 6:46:25 PM	
320.16	196.58	15.29	7.10	5/9/2013 6:47:30 PM	
325.26	155.68	15.19	7.21	5/9/2013 6:48:34 PM	
304.92	155.59	15.45	7.11	5/9/2013 6:49:39 PM	
327.65	148.53	15.46	7.96	5/9/2013 6:50:43 PM	
300.18	152.26	15.96	7.33	5/9/2013 6:51:48 PM	
323.84	167.63	15.02	7.06	5/9/2013 6:52:52 PM	
334.19	150.57	15.24	7.88	5/9/2013 6:53:57 PM	
304.67	160.94	15.82	7.93	5/9/2013 6:55:01 PM	
340.70	158.97	15.17	7.08	5/9/2013 6:56:06 PM	
320.98	152.71	15.38	7.11	5/9/2013 6:57:10 PM	
311.95	162.26	15.30	7.28	5/9/2013 6:58:15 PM	
302.38	168.38	15.35	7.62	5/9/2013 6:59:19 PM	
312.38	146.99	15.21	7.90	5/9/2013 7:00:24 PM	Stop Run 2
321.06	171.07	15.38	7.45		Avg

CO Bias Cal		Co2 Bias Cal	
498	497.9	20.8	20.8
173	172.8	11.9	11.9
0	0.1	0	0

Nox Bias Cal		o2 Bias Cal	
667	666.7	21.2	21.2
303	302.8	10.2	10.2
0	0.2	0	0

CO Bias Cal		Co2 Bias Cal	
173	172.8	11.9	11.9
0	0.1	0	0

Nox Bias Cal		o2 Bias Cal	
303	302.7	10.2	10.2
0	0.2	0	0

475.27	155.97	15.54	7.22	5/9/2013 7:22:59 PM	Start Run 3				
455.15	162.45	15.46	7.73	5/9/2013 7:24:03 PM					
456.24	176.40	15.86	7.41	5/9/2013 7:25:08 PM					
467.93	172.36	15.50	7.38	5/9/2013 7:26:12 PM					
461.07	162.42	15.65	7.42	5/9/2013 7:27:17 PM					
468.77	174.53	15.75	7.29	5/9/2013 7:28:21 PM					
458.29	165.64	15.06	7.35	5/9/2013 7:29:26 PM					
450.31	173.45	15.57	7.80	5/9/2013 7:30:30 PM					
459.69	160.68	15.28	7.55	5/9/2013 7:31:35 PM					
474.87	164.93	15.02	7.09	5/9/2013 7:32:39 PM					
471.87	168.22	15.83	7.95	5/9/2013 7:33:44 PM					
450.63	171.76	15.71	7.50	5/9/2013 7:34:49 PM					
472.05	160.40	15.46	7.73	5/9/2013 7:35:53 PM					
469.62	176.91	15.75	7.65	5/9/2013 7:36:58 PM					
473.99	179.55	15.81	7.72	5/9/2013 7:38:02 PM					
471.35	162.59	15.40	7.08	5/9/2013 7:39:07 PM					
470.70	171.52	15.81	7.87	5/9/2013 7:40:11 PM					
450.35	173.11	15.96	7.35	5/9/2013 7:41:16 PM					
450.22	165.29	15.92	7.78	5/9/2013 7:42:20 PM					
469.12	163.78	15.23	7.92	5/9/2013 7:43:25 PM	Stop Run 3				
463.87	168.10	15.58	7.54		Avg				
630.71	174.67	15.95	7.22	5/9/2013 8:05:59 PM	Start Run 4				
631.42	175.26	15.97	7.05	5/9/2013 8:07:04 PM					
609.57	169.39	15.53	7.29	5/9/2013 8:08:08 PM					
611.33	172.91	15.32	7.24	5/9/2013 8:09:13 PM					
611.74	173.80	15.16	7.89	5/9/2013 8:10:18 PM					
607.65	169.47	15.41	7.91	5/9/2013 8:11:22 PM					
606.54	173.77	15.14	7.75	5/9/2013 8:12:27 PM					
631.90	169.67	15.83	7.96	5/9/2013 8:13:31 PM					
598.58	174.70	15.64	7.56	5/9/2013 8:14:36 PM					
610.57	174.92	15.33	7.08	5/9/2013 8:15:40 PM					
602.79	169.12	15.61	7.43	5/9/2013 8:16:45 PM					
613.54	175.44	15.38	7.42	5/9/2013 8:17:49 PM					
652.64	173.69	15.02	7.44	5/9/2013 8:18:54 PM					
607.44	173.32	15.33	7.12	5/9/2013 8:19:58 PM		CO Bias Cal		Co2 Bias Cal	
635.23	173.99	15.07	7.42	5/9/2013 8:21:03 PM		173	172.8	11.9	11.9
643.95	172.66	15.09	7.18	5/9/2013 8:22:07 PM		0	0.2	0	0
638.09	170.04	15.86	7.80	5/9/2013 8:23:12 PM					
619.27	173.23	15.13	7.13	5/9/2013 8:24:16 PM		Nox Bias Cal		o2 Bias Cal	
631.01	173.66	15.18	7.88	5/9/2013 8:25:21 PM	Stop Run 4	303	302.6	10.2	10.2
620.73	172.83	15.42	7.46		Avg	0	0.3	0	0

614.30	185.05	15.92	7.40	5/9/2013 8:49:00 PM	Start Run 5				
644.33	190.14	15.96	7.91	5/9/2013 8:50:05 PM					
659.26	181.83	15.50	7.80	5/9/2013 8:51:09 PM					
637.46	194.32	15.31	7.56	5/9/2013 8:52:14 PM					
615.70	182.04	15.27	7.88	5/9/2013 8:53:18 PM					
607.19	188.36	15.83	7.80	5/9/2013 8:54:23 PM					
596.67	181.61	15.95	7.97	5/9/2013 8:55:27 PM					
616.08	194.09	15.56	7.13	5/9/2013 8:56:32 PM					
590.29	193.69	15.53	7.49	5/9/2013 8:57:36 PM					
610.26	182.32	15.87	7.48	5/9/2013 8:58:41 PM					
632.12	182.97	15.73	7.61	5/9/2013 8:59:45 PM					
648.29	198.58	15.79	7.32	5/9/2013 9:00:50 PM					
647.43	189.96	15.84	7.89	5/9/2013 9:01:54 PM					
612.84	184.51	15.20	7.21	5/9/2013 9:02:59 PM					
609.47	196.15	15.45	7.02	5/9/2013 9:04:03 PM					
596.47	189.19	15.96	7.18	5/9/2013 9:05:08 PM					
614.78	198.45	15.83	7.63	5/9/2013 9:06:12 PM					
617.68	198.56	15.29	7.66	5/9/2013 9:07:17 PM					
646.55	199.51	15.23	7.84	5/9/2013 9:08:22 PM					
602.35	192.91	15.32	7.51	5/9/2013 9:09:26 PM	Stop Run 5				
620.98	190.21	15.62	7.56		Avg				
451.48	204.34	15.52	7.00	5/9/2013 9:32:01 PM	Start Run 6				
456.58	215.03	15.57	7.29	5/9/2013 9:33:05 PM					
471.83	200.77	15.93	7.86	5/9/2013 9:34:10 PM					
464.96	197.15	15.69	7.22	5/9/2013 9:35:14 PM					
447.40	204.68	15.28	7.69	5/9/2013 9:36:19 PM					
471.87	206.78	15.74	7.14	5/9/2013 9:37:23 PM					
478.11	199.62	15.41	7.45	5/9/2013 9:38:28 PM					
467.49	200.53	15.73	7.15	5/9/2013 9:39:32 PM					
471.02	197.49	15.87	7.50	5/9/2013 9:40:37 PM					
450.15	193.52	15.75	7.68	5/9/2013 9:41:41 PM					
482.12	198.56	15.60	7.77	5/9/2013 9:42:46 PM					
453.34	204.22	15.83	7.06	5/9/2013 9:43:51 PM					
453.29	193.87	15.32	7.50	5/9/2013 9:44:55 PM					
457.86	215.92	15.24	7.87	5/9/2013 9:46:00 PM					
456.54	218.24	16.00	7.93	5/9/2013 9:47:04 PM		CO Bias Cal		Co2 Bias Cal	
440.19	193.14	15.19	7.53	5/9/2013 9:48:09 PM		173	172.8	11.9	11.8
444.12	203.25	15.97	7.23	5/9/2013 9:49:13 PM		0	0.2	0	0.1
484.59	209.94	15.22	7.95	5/9/2013 9:50:17 PM					
443.57	208.82	15.15	7.94	5/9/2013 9:51:22 PM		Nox Bias Cal		o2 Bias Cal	
465.81	200.67	15.24	7.46	5/9/2013 9:52:27 PM	Stop Run 6	303	302.6	10.2	10.1
460.61	203.33	15.56	7.51		Avg	0	0.3	0	0.1

458.84	220.20	15.19	7.38	5/9/2013 10:16:06 PM	Start Run 7				
549.98	218.37	15.63	7.03	5/9/2013 10:17:11 PM					
542.78	210.20	15.78	7.34	5/9/2013 10:18:15 PM					
455.88	214.11	15.39	7.56	5/9/2013 10:19:20 PM					
548.25	215.21	15.93	7.61	5/9/2013 10:20:24 PM					
512.32	218.29	15.61	7.07	5/9/2013 10:21:29 PM					
543.14	200.84	15.42	7.01	5/9/2013 10:22:33 PM					
573.27	211.36	15.59	7.24	5/9/2013 10:23:38 PM					
458.62	217.29	15.87	7.42	5/9/2013 10:24:42 PM					
585.96	220.87	15.53	7.04	5/9/2013 10:25:47 PM					
470.27	210.15	15.08	7.27	5/9/2013 10:26:51 PM					
590.03	200.90	15.30	7.69	5/9/2013 10:27:56 PM					
591.64	200.03	15.31	7.81	5/9/2013 10:29:00 PM					
567.81	201.28	15.99	7.22	5/9/2013 10:30:05 PM					
498.52	219.65	15.99	7.35	5/9/2013 10:31:09 PM					
544.49	206.85	15.43	7.15	5/9/2013 10:32:14 PM					
548.82	201.85	15.99	7.85	5/9/2013 10:33:18 PM					
540.94	204.63	15.89	7.99	5/9/2013 10:34:23 PM					
518.65	215.84	15.83	7.68	5/9/2013 10:35:27 PM					
475.66	202.57	15.63	7.04	5/9/2013 10:36:32 PM	Stop Run 7				
528.79	210.52	15.62	7.39		Avg				
701.03	195.46	15.47	7.68	5/9/2013 11:00:11 PM	Start Run 8				
716.67	197.28	15.58	7.65	5/9/2013 11:01:16 PM					
691.68	195.23	15.32	7.92	5/9/2013 11:02:20 PM					
765.22	187.98	15.74	7.20	5/9/2013 11:03:25 PM					
692.74	198.95	15.84	7.04	5/9/2013 11:04:29 PM					
708.36	196.45	15.31	7.85	5/9/2013 11:05:34 PM					
745.05	192.16	15.14	7.15	5/9/2013 11:06:38 PM					
765.77	188.04	15.53	7.11	5/9/2013 11:07:43 PM					
711.01	192.50	15.02	7.17	5/9/2013 11:08:47 PM					
767.17	188.68	15.87	7.37	5/9/2013 11:09:52 PM					
752.22	190.23	15.00	7.43	5/9/2013 11:10:56 PM					
700.78	194.32	15.38	7.16	5/9/2013 11:12:01 PM					
766.04	186.38	15.85	7.89	5/9/2013 11:13:05 PM					
769.60	189.23	15.32	7.61	5/9/2013 11:14:10 PM					
765.20	186.50	15.10	7.74	5/9/2013 11:15:14 PM		CO Bias Cal		Co2 Bias Cal	
719.81	189.03	15.23	7.09	5/9/2013 11:16:19 PM		173	172.7	11.9	11.8
697.78	196.27	15.82	7.31	5/9/2013 11:17:24 PM		0	0.3	0	0.1
723.54	191.63	15.83	7.71	5/9/2013 11:18:28 PM					
769.76	198.43	15.42	7.14	5/9/2013 11:19:32 PM		Nox Bias Cal		o2 Bias Cal	
736.37	194.19	15.58	7.01	5/9/2013 11:20:37 PM	Stop Run 8	303	302.4	10.2	10.1
733.29	192.45	15.47	7.41		Avg	0	0.4	0	0.1

566.07	198.08	15.11	7.49	5/9/2013 11:42:07 PM	Start Run 9				
640.75	191.94	15.71	7.55	5/9/2013 11:43:12 PM					
659.55	196.89	15.23	7.12	5/9/2013 11:44:16 PM					
637.71	205.61	15.75	7.98	5/9/2013 11:45:21 PM					
590.44	206.19	15.12	7.13	5/9/2013 11:46:25 PM					
561.22	209.65	15.04	7.99	5/9/2013 11:47:30 PM					
606.83	205.70	15.84	7.40	5/9/2013 11:48:34 PM					
658.81	204.92	15.83	7.15	5/9/2013 11:49:39 PM					
630.46	201.87	15.92	7.91	5/9/2013 11:50:43 PM					
658.64	206.24	15.86	7.68	5/9/2013 11:51:48 PM					
609.26	208.44	15.26	7.86	5/9/2013 11:52:53 PM					
576.68	202.76	15.04	7.50	5/9/2013 11:53:57 PM					
656.26	204.39	15.02	7.57	5/9/2013 11:55:01 PM					
655.59	201.41	15.75	7.31	5/9/2013 11:56:06 PM					
562.59	205.80	15.25	7.94	5/9/2013 11:57:10 PM					
574.13	209.61	15.37	7.25	5/9/2013 11:58:15 PM					
601.41	208.07	15.01	7.67	5/9/2013 11:59:20 PM					
628.27	207.47	15.43	7.85	5/10/2013 12:00:24 AM					
606.56	203.24	15.11	8.00	5/10/2013 12:01:29 AM					
602.77	200.81	15.16	7.84	5/10/2013 12:02:33 AM	Stop Run 9				
614.20	203.95	15.39	7.61		Avg				
413.36	184.33	15.40	7.52	5/10/2013 12:26:13 AM	Start Run 10				
414.59	186.09	15.20	7.64	5/10/2013 12:27:17 AM					
420.30	198.42	15.02	7.94	5/10/2013 12:28:22 AM					
392.12	198.13	15.51	7.54	5/10/2013 12:29:26 AM					
321.64	185.30	16.00	7.31	5/10/2013 12:30:30 AM					
402.42	197.11	15.65	7.09	5/10/2013 12:31:35 AM					
353.53	186.96	15.19	7.85	5/10/2013 12:32:39 AM					
329.38	198.99	15.60	7.93	5/10/2013 12:33:44 AM					
434.23	198.40	15.72	7.58	5/10/2013 12:34:49 AM					
389.10	192.30	15.54	7.88	5/10/2013 12:35:53 AM					
353.10	193.68	15.73	7.89	5/10/2013 12:36:58 AM					
354.20	185.43	15.31	7.93	5/10/2013 12:38:02 AM					
320.66	186.53	15.46	7.88	5/10/2013 12:39:07 AM					
369.60	188.09	15.03	7.83	5/10/2013 12:40:11 AM					
317.81	198.13	15.12	7.81	5/10/2013 12:41:16 AM		CO Bias Cal		Co2 Bias Cal	
409.83	194.38	15.37	7.99	5/10/2013 12:42:20 AM		173	172.6	11.9	11.7
330.18	192.38	15.64	7.74	5/10/2013 12:43:25 AM		0	0.3	0	0.1
377.85	189.35	15.20	7.45	5/10/2013 12:44:29 AM					
366.42	195.72	15.75	7.63	5/10/2013 12:45:34 AM		Nox Bias Cal		o2 Bias Cal	
355.22	186.40	15.76	7.03	5/10/2013 12:46:38 AM	Stop Run 10	303	302.4	10.2	10
371.28	191.81	15.46	7.67		Avg	0	0.4	0	0.1

ESSROC San Juan
Baghouse #2 Outlet

			So2 Monitor Cal	
			134	134
			59.8	59.8
			0	0.1
			So2 Bias Cal	
			134	134.1
			59.8	59.9
SO2			0	0.1
PPM	Time Stamp			
17.02	5/9/2013 6:00:11 PM	Start Run 1		
14.43	5/9/2013 6:01:16 PM			
17.10	5/9/2013 6:02:20 PM			
16.59	5/9/2013 6:03:25 PM			
18.38	5/9/2013 6:04:29 PM			
19.64	5/9/2013 6:05:34 PM			
16.67	5/9/2013 6:06:38 PM			
16.81	5/9/2013 6:07:43 PM			
15.64	5/9/2013 6:08:47 PM			
19.71	5/9/2013 6:09:52 PM			
17.84	5/9/2013 6:10:56 PM			
16.72	5/9/2013 6:12:01 PM			
17.67	5/9/2013 6:13:05 PM			
16.27	5/9/2013 6:14:10 PM			
13.98	5/9/2013 6:15:14 PM			
18.38	5/9/2013 6:16:19 PM			
16.64	5/9/2013 6:17:23 PM			
19.53	5/9/2013 6:18:28 PM			
16.31	5/9/2013 6:19:32 PM			
15.51	5/9/2013 6:20:37 PM	Stop Run 1		
17.04		Avg		
0.01	5/9/2013 6:39:58 PM	Start Run2		
0.01	5/9/2013 6:41:03 PM			
0.01	5/9/2013 6:42:07 PM			
0.01	5/9/2013 6:43:12 PM			
0.01	5/9/2013 6:44:16 PM			
0.01	5/9/2013 6:45:21 PM			
0.01	5/9/2013 6:46:25 PM			
0.01	5/9/2013 6:47:30 PM			
0.01	5/9/2013 6:48:34 PM			
0.01	5/9/2013 6:49:39 PM			
0.01	5/9/2013 6:50:43 PM			
0.01	5/9/2013 6:51:48 PM			
0.01	5/9/2013 6:52:52 PM			
0.01	5/9/2013 6:53:57 PM			
0.01	5/9/2013 6:55:01 PM			
0.01	5/9/2013 6:56:06 PM			
0.01	5/9/2013 6:57:10 PM			
0.01	5/9/2013 6:58:15 PM			
0.01	5/9/2013 6:59:19 PM			
0.01	5/9/2013 7:00:24 PM	Stop Run 2	So2 Bias Cal	
0.01		Avg	59.8	59.8
			0	0.1

0.01	5/9/2013 7:22:59 PM	Start Run 3		
0.01	5/9/2013 7:24:03 PM			
0.01	5/9/2013 7:25:08 PM			
0.01	5/9/2013 7:26:12 PM			
0.01	5/9/2013 7:27:17 PM			
0.01	5/9/2013 7:28:21 PM			
0.01	5/9/2013 7:29:26 PM			
0.01	5/9/2013 7:30:30 PM			
0.01	5/9/2013 7:31:35 PM			
0.01	5/9/2013 7:32:39 PM			
0.01	5/9/2013 7:33:44 PM			
0.01	5/9/2013 7:34:49 PM			
0.01	5/9/2013 7:35:53 PM			
0.01	5/9/2013 7:36:58 PM			
0.01	5/9/2013 7:38:02 PM			
0.01	5/9/2013 7:39:07 PM			
0.01	5/9/2013 7:40:11 PM			
0.01	5/9/2013 7:41:16 PM			
0.01	5/9/2013 7:42:20 PM			
0.01	5/9/2013 7:43:25 PM	Stop Run 3		
0.01		Avg		
0.01	5/9/2013 8:05:59 PM	Start Run 4		
0.01	5/9/2013 8:07:04 PM			
0.01	5/9/2013 8:08:08 PM			
0.01	5/9/2013 8:09:13 PM			
0.01	5/9/2013 8:10:18 PM			
0.01	5/9/2013 8:11:22 PM			
0.01	5/9/2013 8:12:27 PM			
0.01	5/9/2013 8:13:31 PM			
0.01	5/9/2013 8:14:36 PM			
0.01	5/9/2013 8:15:40 PM			
0.01	5/9/2013 8:16:45 PM			
0.01	5/9/2013 8:17:49 PM			
0.01	5/9/2013 8:18:54 PM			
0.01	5/9/2013 8:19:58 PM			
0.01	5/9/2013 8:21:03 PM			
0.01	5/9/2013 8:22:07 PM			
0.01	5/9/2013 8:23:12 PM			
0.01	5/9/2013 8:24:16 PM			
0.01	5/9/2013 8:25:21 PM	Stop Run 4	So2 Bias Cal	
0.01		Avg	59.8	59.8
			0	0.1

0.01	5/9/2013 8:49:00 PM	Start Run 5		
0.01	5/9/2013 8:50:05 PM			
0.01	5/9/2013 8:51:09 PM			
0.01	5/9/2013 8:52:14 PM			
0.01	5/9/2013 8:53:18 PM			
0.01	5/9/2013 8:54:23 PM			
0.01	5/9/2013 8:55:27 PM			
0.28	5/9/2013 8:56:32 PM			
0.64	5/9/2013 8:57:36 PM			
0.92	5/9/2013 8:58:41 PM			
1.05	5/9/2013 8:59:45 PM			
1.57	5/9/2013 9:00:50 PM			
2.57	5/9/2013 9:01:54 PM			
2.64	5/9/2013 9:02:59 PM			
1.76	5/9/2013 9:04:03 PM			
0.94	5/9/2013 9:05:08 PM			
0.51	5/9/2013 9:06:12 PM			
0.34	5/9/2013 9:07:17 PM			
0.22	5/9/2013 9:08:22 PM			
0.01	5/9/2013 9:09:26 PM	Stop Run 5		
0.68		Avg		

0.01	5/9/2013 9:32:01 PM	Start Run 6		
0.01	5/9/2013 9:33:05 PM			
0.01	5/9/2013 9:34:10 PM			
0.01	5/9/2013 9:35:14 PM			
0.01	5/9/2013 9:36:19 PM			
0.01	5/9/2013 9:37:23 PM			
0.01	5/9/2013 9:38:28 PM			
0.01	5/9/2013 9:39:32 PM			
0.01	5/9/2013 9:40:37 PM			
0.01	5/9/2013 9:41:41 PM			
0.01	5/9/2013 9:42:46 PM			
0.01	5/9/2013 9:43:51 PM			
0.01	5/9/2013 9:44:55 PM			
0.01	5/9/2013 9:46:00 PM			
0.01	5/9/2013 9:47:04 PM			
0.01	5/9/2013 9:48:09 PM			
0.01	5/9/2013 9:49:13 PM			
0.01	5/9/2013 9:50:17 PM			
0.01	5/9/2013 9:51:22 PM			
0.01	5/9/2013 9:52:27 PM	Stop Run 6	So2 Bias Cal	
0.01		Avg	59.8	59.7
			0	0.1

0.01	5/9/2013 10:16:06 PM	Start Run 7		
0.01	5/9/2013 10:17:11 PM			
0.01	5/9/2013 10:18:15 PM			
0.01	5/9/2013 10:19:20 PM			
0.06	5/9/2013 10:20:24 PM			
0.16	5/9/2013 10:21:29 PM			
0.84	5/9/2013 10:22:33 PM			
0.69	5/9/2013 10:23:38 PM			
1.85	5/9/2013 10:24:42 PM			
1.99	5/9/2013 10:25:47 PM			
2.86	5/9/2013 10:26:51 PM			
2.25	5/9/2013 10:27:56 PM			
2.62	5/9/2013 10:29:00 PM			
2.11	5/9/2013 10:30:05 PM			
1.85	5/9/2013 10:31:09 PM			
0.98	5/9/2013 10:32:14 PM			
0.57	5/9/2013 10:33:18 PM			
0.11	5/9/2013 10:34:23 PM			
0.01	5/9/2013 10:35:27 PM			
0.01	5/9/2013 10:36:32 PM	Stop Run 7		
0.95		Avg		
0.01	5/9/2013 11:00:11 PM	Start Run 8		
0.01	5/9/2013 11:01:16 PM			
0.01	5/9/2013 11:02:20 PM			
0.01	5/9/2013 11:03:25 PM			
0.01	5/9/2013 11:04:29 PM			
0.01	5/9/2013 11:05:34 PM			
0.01	5/9/2013 11:06:38 PM			
0.01	5/9/2013 11:07:43 PM			
0.01	5/9/2013 11:08:47 PM			
0.01	5/9/2013 11:09:52 PM			
0.01	5/9/2013 11:10:56 PM			
0.01	5/9/2013 11:12:01 PM			
0.01	5/9/2013 11:13:05 PM			
0.01	5/9/2013 11:14:10 PM			
0.01	5/9/2013 11:15:14 PM			
0.01	5/9/2013 11:16:19 PM			
0.01	5/9/2013 11:17:24 PM			
0.01	5/9/2013 11:18:28 PM			
0.01	5/9/2013 11:19:32 PM			
0.01	5/9/2013 11:20:37 PM	Stop Run 8	So2 Bias Cal	
0.01		Avg	59.8	59.6
			0	0.1

0.01	5/9/2013 11:42:07 PM	Start Run 9		
0.01	5/9/2013 11:43:12 PM			
0.01	5/9/2013 11:44:16 PM			
0.01	5/9/2013 11:45:21 PM			
0.01	5/9/2013 11:46:25 PM			
0.01	5/9/2013 11:47:30 PM			
0.01	5/9/2013 11:48:34 PM			
0.01	5/9/2013 11:49:39 PM			
0.01	5/9/2013 11:50:43 PM			
0.01	5/9/2013 11:51:48 PM			
0.01	5/9/2013 11:52:53 PM			
0.01	5/9/2013 11:53:57 PM			
0.01	5/9/2013 11:55:01 PM			
0.01	5/9/2013 11:56:06 PM			
0.01	5/9/2013 11:57:10 PM			
0.01	5/9/2013 11:58:15 PM			
0.01	5/9/2013 11:59:20 PM			
0.01	5/10/2013 12:00:24 AM			
0.01	5/10/2013 12:01:29 AM			
0.01	5/10/2013 12:02:33 AM	Stop Run 9		
0.01		Avg		
0.01	5/10/2013 12:26:13 AM	Start Run 10		
0.01	5/10/2013 12:27:17 AM			
0.01	5/10/2013 12:28:22 AM			
0.01	5/10/2013 12:29:26 AM			
0.01	5/10/2013 12:30:30 AM			
0.01	5/10/2013 12:31:35 AM			
0.01	5/10/2013 12:32:39 AM			
0.01	5/10/2013 12:33:44 AM			
0.01	5/10/2013 12:34:49 AM			
0.01	5/10/2013 12:35:53 AM			
0.01	5/10/2013 12:36:58 AM			
0.01	5/10/2013 12:38:02 AM			
0.01	5/10/2013 12:39:07 AM			
0.01	5/10/2013 12:40:11 AM			
0.01	5/10/2013 12:41:16 AM			
0.01	5/10/2013 12:42:20 AM			
0.01	5/10/2013 12:43:25 AM			
0.01	5/10/2013 12:44:29 AM			
0.01	5/10/2013 12:45:34 AM			
0.01	5/10/2013 12:46:38 AM	Stop Run 10	So2 Bias Cal	
0.01		Avg	59.8	59.6
			0	0.2