LUDLUM MODEL 43-93 AND MODEL 43-93-2 ALPHA/BETA SCINTILLATORS

March 2016

LUDLUM MODEL 43-93 AND MODEL 43-93-2 ALPHA/BETA SCINTILLATORS

March 2016

LUDLUM MEASUREMENTS, INC
501 OAK STREET, P.O. BOX 810
SWEETWATER, TEXAS 79556
325-235-5494, FAX: 325-235-4672

STATEMENT OF WARRANTY

Ludlum Measurements, Inc. warrants the products covered in this manual to be free of defects due to workmanship, material, and design for a period of twelve months from the date of delivery. The calibration of a product is warranted to be within its specified accuracy limits at the time of shipment. In the event of instrument failure, notify Ludlum Measurements to determine if repair, recalibration, or replacement is required.

This warranty excludes the replacement of photomultiplier tubes, G-M and proportional tubes, and scintillation crystals which are broken due to excessive physical abuse or used for purposes other than intended.

There are no warranties, express or implied, including without limitation any implied warranty of merchantability or fitness, which extend beyond the description of the face there of. If the product does not perform as warranted herein, purchaser's sole remedy shall be repair or replacement, at the option of Ludlum Measurements. In no event will Ludlum Measurements be liable for damages, lost revenue, lost wages, or any other incidental or consequential damages, arising from the purchase, use, or inability to use product.

RETURN OF GOODS TO MANUFACTURER

If equipment needs to be returned to Ludlum Measurements, Inc. for repair or calibration, please send to the address below. All shipments should include documentation containing return shipping address, customer name, telephone number, description of service requested, and all other necessary information. Your cooperation will expedite the return of your equipment.

LUDLUM MEASUREMENTS, INC.
ATTN: REPAIR DEPARTMENT
501 OAK STREET
SWEETWATER, TX 79556

800-622-0828 325-235-5494
FAX 325-235-4672

Table of Contents

Introduction 1

Specifications 2

Safety Considerations 3

Environmental Conditions for Normal Use 3-1

Cleaning Instructions and Precautions 3-1

Parts List 4

Parts for Model 43-93 4-1

Parts for Model 43-93-2 4-2

Parts Common to Both Models 4-2

Drawings and Diagrams 5

Section 1

Introduction

The Model 43-93 and 43-93-2 detectors are designed for alpha-beta surveying when coupled with compatible instruments. Functionally, these two detectors are very similar but differ in the type of protective window screen and the size of the active and open window areas.

Discriminating between alpha and beta radiation simultaneously requires the counting instrument to have either separate power supplies or window/threshold controls for each channel. The Ludlum Model 2929 Scaler, Model 2223, Model 2224, or Model 2360 instruments provide the necessary circuitry for simultaneous alpha-beta discrimination.

A Zinc Sulfide [ZnS (Ag)] scintillator is used for detecting alpha particles, and a thin plastic scintillator is employed for detecting beta radiation. The scintillation material is covered by metallized Mylar to reduce light response, limiting excessive background counts. The Model 43-93 window is protected by an 88% open square-hole screen, where the Model 43-93-2 window is protected by a 79% open hexagonal-hole screen.

The photomultiplier tube (PMT) and crystal assembly may easily be removed for repair. Refer to the assembly view drawing in section 5 of this manual for details on construction and parts. The photomultiplier tube typically operates between 500 and 1200 volts with a recommended maximum of 1500 volts.

ED_001091_00027921-00005

Section 2

Specifications

Photomultiplier Tube: 2.9 cm (1.1 in.) diameter; magnetically shielded

Scintillator Material: Zinc Sulfide [ZnS (Ag)] deposited on a 0.25 mm (0.010 in.) rectangular plastic scintillator

Window: 1.2 mg/cm^2 metalized polyester

Window Area (Model 43-93):

Active area: approximately 100 cm^2

Open area: approximately 88 cm^2

Window Area (Model 43-93-2):

Active area: approximately 126 cm^2

Open area: approximately 100 cm^2

Efficiency (4□):

Model 43-93: typically 15% for ^{99}Tc, 20% for ^{90}Sr ^{90}Y, and 20% for ^{239}Pu

Model 43-93-2: typically 10% for ^{99}Tc, 17% for ^{90}Sr ^{90}Y, and 15% for ^{239}Pu

Background (in a 10µR/hr field):

Alpha: 3 cpm or less

Beta: 300 cpm or less

Response Uniformity: 10% or less from average reading

Operating Voltage: typically 500-1200 Vdc (1500 Vdc max.)

ED_001091_00027921-00006

Dynode String Resistance: 60 megohm

Gamma Sensitivity: 15-20 cpm/μR/hr (^{137}Cs)

Dead Time: typically 5 μsec or less

Connector: Series "C" unless otherwise specified

Temperature Range: -20 to 50 °C (-4 to 122 °F)

Size: 6.4 x 9.5 x 31 cm (2.5 x 3.8 x 12.3 in.) (H x W x L)

Weight: approximately 0.45 kg (1 lb)

Construction: aluminum housing with beige powder-coat finish

ED_001091_00027921-00007

Section 3

Safety Considerations

Environmental Conditions for Normal Use

Indoor or outdoor use

No maximum altitude

Temperature range of -20 to 50°C (-4 to 122 °F)

Maximum relative humidity of less than 95% (non-condensing)

Cleaning Instructions and Precautions

The detectors specified in this manual may be cleaned externally with a damp cloth, using only water as the wetting agent. Do not immerse the detector in any liquid. Do not attempt to clean a detector that is attached to an instrument providing high voltage. Disconnect the detector cable before cleaning.

ED_001091_00027921-00008

Section 4

Parts List

For Model 43-93

Assembly View, Drawing 393 × 140

Reference	Description	Part Number
UNIT	Completely Assembled Model 43-93 Alpha /Beta Scintillator	47-3475

Quantity	Description	Part Number
1 ea	Welded Body Assembly	2393-141
1 ea	Mirror	2310698
1 ea	Connector Cap	7393-102
1 ea	Mylar Window Assembly	4393-149
1 ea	Window Frame	7393-148
1 ea	Face Ring	7393-137
1 ea	Square Screen (external snap-on screen)	7393-171
1 ea	Backup w/Plastic Scintillator and ZnS	4393-153
1 ea	Plastic Scintillator- EJ444L-2.94 x5.91x 0.010	01-5692
1 ea	Photomultiplier Tube	01-5842
1 ea	Voltage Divider Board	5435-484
*	Foil-NETIC	01-5019
*	Foil-CO-NETIC	01-5026
9 ea	Sponge	7002-065-04
1 ea	Tube Holder Assembly	2393-117
1 ea	Gasket	7393-139
1 ea	O-Ring	16-8366
1 ea	Series "C" Connector RECPT-UG706/U	4478-011
1 ea	Model 43-93 Vinyl Cover	7393-162

ED_001091_00027921-00009

For Model 43-93-2

Assembly View, Drawing 393 × 119

Reference	Description	Part Number
UNIT	Completely Assembled Model 43-93-2 Alpha /Beta Scintillator	47-3227

Quantity	Description	Part Number
1 ea	Welded Body Assembly	2393-105
1 ea	Mirror	2310654
1 ea	Connector Cap	7393-102
1 ea	Mylar Window Assembly	4393-126
1 ea	Window Frame	7393-109
1 ea	Face Ring	7393-112
1 ea	Hex Screen (external snap-on screen)	7393-116
1 ea	Backup w/Plastic Scintillator and ZnS	4393-127
1 ea	Plastic Scintillator- EJ212-3.12 x 6.67 x 0.010	01-5685
1 ea	Photomultiplier Tube	01-5238
1 ea	Voltage Divider Board	5435-182
*	Foil-NETIC	01-5019
*	Foil-CO-NETIC	01-5026
9 ea	Sponge	7002-065-04
1 ea	Tube Holder Assembly	2393-117
1 ea	Gasket	7393-110
1 ea	O-Ring	16-8366
1 ea	Series "C" Connector RECPT-UG706/U	4478-011
1 ea	Model 43-93-2 Vinyl Cover	7393-169

Parts Common to both Model 43-93 and 43-93-2

1 1/8-inch Voltage Divider Board, Drawing 435 × 1325

Reference	Description	Part Number
BOARD	Completely Assembled 1 1/8 inch Voltage Divider Board (Models 43-93 & 43-93-2)	5435-484
CAPACITORS		
C1- C3	0.01uF, 200V	04-5725
C4	0.0047uF, 3KV	04-5547
RESISTORS		
R1	10M, 1/8W, 1%	12-7996

ED_001091_00027921-00010

	Reference	Description	Part Number
	R2	7.5M, 1/8W, 5%	12-7971
	R3-R10	10M, 1/8W, 1%	12-7996
	R11	2.21M, 1/8W, 1%	12-7002
	R12-R13	10M, 1/8W, 1%	12-7996
MISCELLANEOUS	*	SOCKET 1 1/8 inch PCB MOUNT	4435-103
	W1	Wire-#22AWG WHT 9 65/40	21-8543
	W4	Wire-#22AWG BLK 0 65/40	21-8552

ED_001091_00027921-00011

Section

5

Drawings and Diagrams

Model 43-93 Assembly View, Drawing 393 × 140

Model 43-93-2 Assembly View, Drawing 393 × 119

Mylar Window Replacement, Drawing 393 x 165A

1 1/8 inch Voltage Divider Circuit Board, Drawing 435 × 1325

1 1/8 inch Voltage Divider Component Layout, Drawing 435 × 1324 (2 sheets)

ED_001091_00027921-00012

REV #	ALTERATIONS	DATE	BY
3	REDESIGNED	11-13-00	JGW

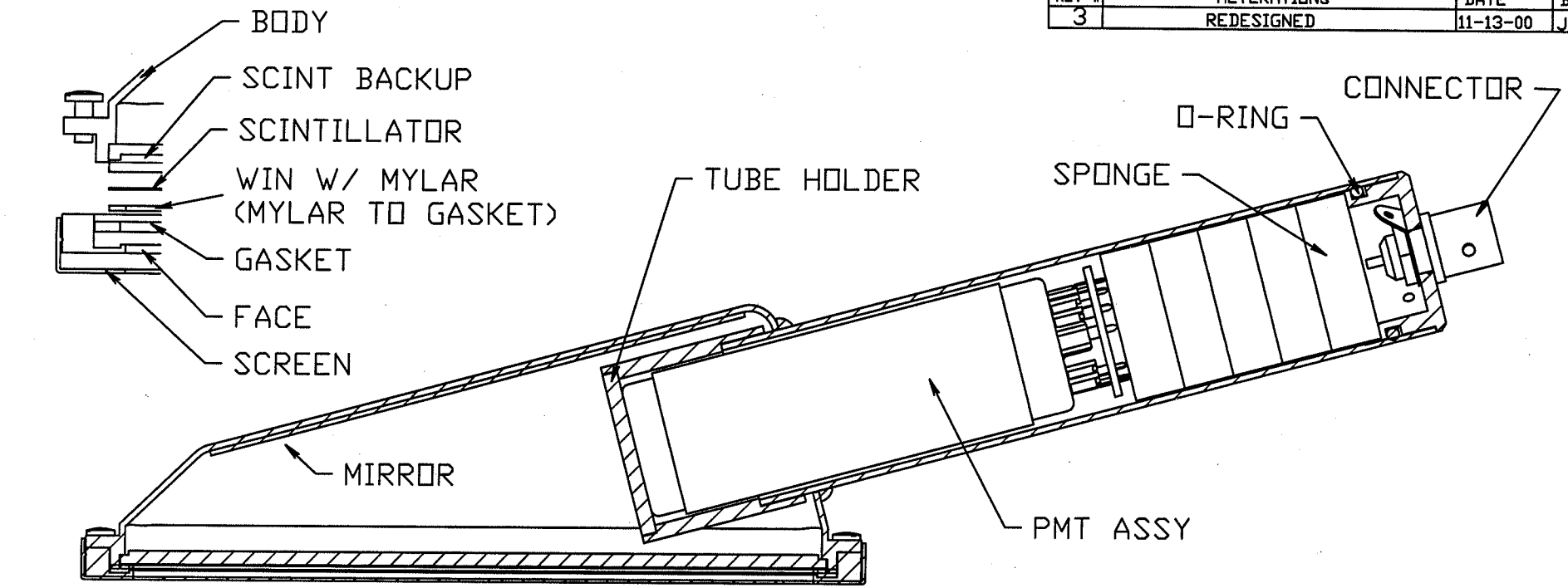

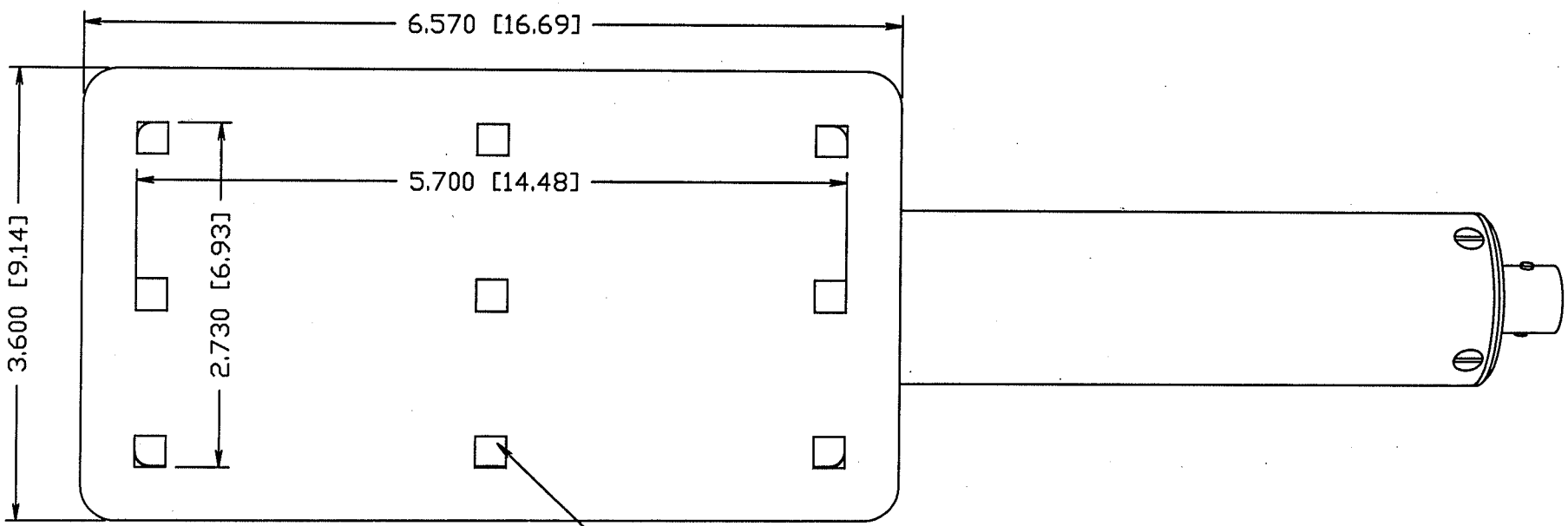

88% OPEN
(ALL HOLES ARE NOT SHOWN)

DWN	DATE	CHECKED	APPROVED
JGW	11-13-00	11-13-00	9-28-01

TITLE: M43-93, 44-142 W/ SNAP ON SCRN

LUDLUM MEASUREMENTS, INC.
501 OAK STREET
SWEETWATER, TEXAS 79556

SERIES	SHEET
393	140

F

REV #	ALTERATIONS	DATE	BY
1	VALID	2/12/02	DSW

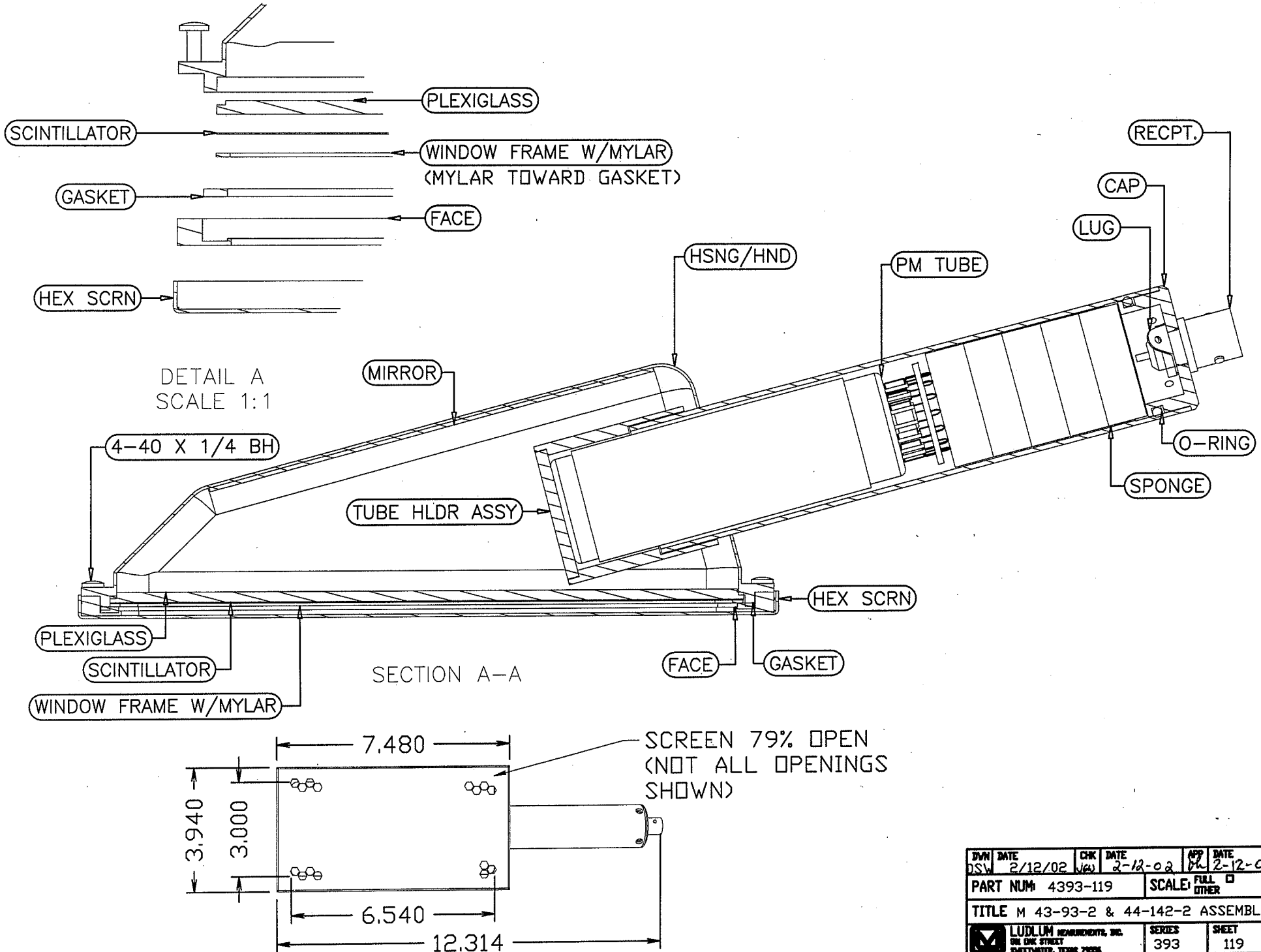

DWN	DATE	CHK	DATE	APP	DATE
DSW	2/12/02	JGW	2-12-02	DL	2-12-02

PART NUM: 4393-119 SCALE: FULL ☐ OTHER

TITLE M 43-93-2 & 44-142-2 ASSEMBLY

LUDLUM MEASUREMENTS, INC. 501 OAK STREET SWEETWATER, TEXAS 79556

SERIES 393 SHEET 119

REV #	ALTERATIONS	DATE	BY
1	VALID	1-27-11	CMC

MYLAR WINDOW REPLACEMENT

1. REMOVE SCREWS
2. REMOVE FACE RING
3. PULL OUT DAMAGED MYLAR WINDOW (WARNING!!! MAKE SURE SCINTILLATOR ASSEMBLY STAYS IN PLACE).
4. INSTALL NEW MYLAR WINDOW.
5. ATTACH FACE RING (WARNING!!! MAKE SURE GASKET IS NOT DAMAGED)
6. INSTALL SCREWS

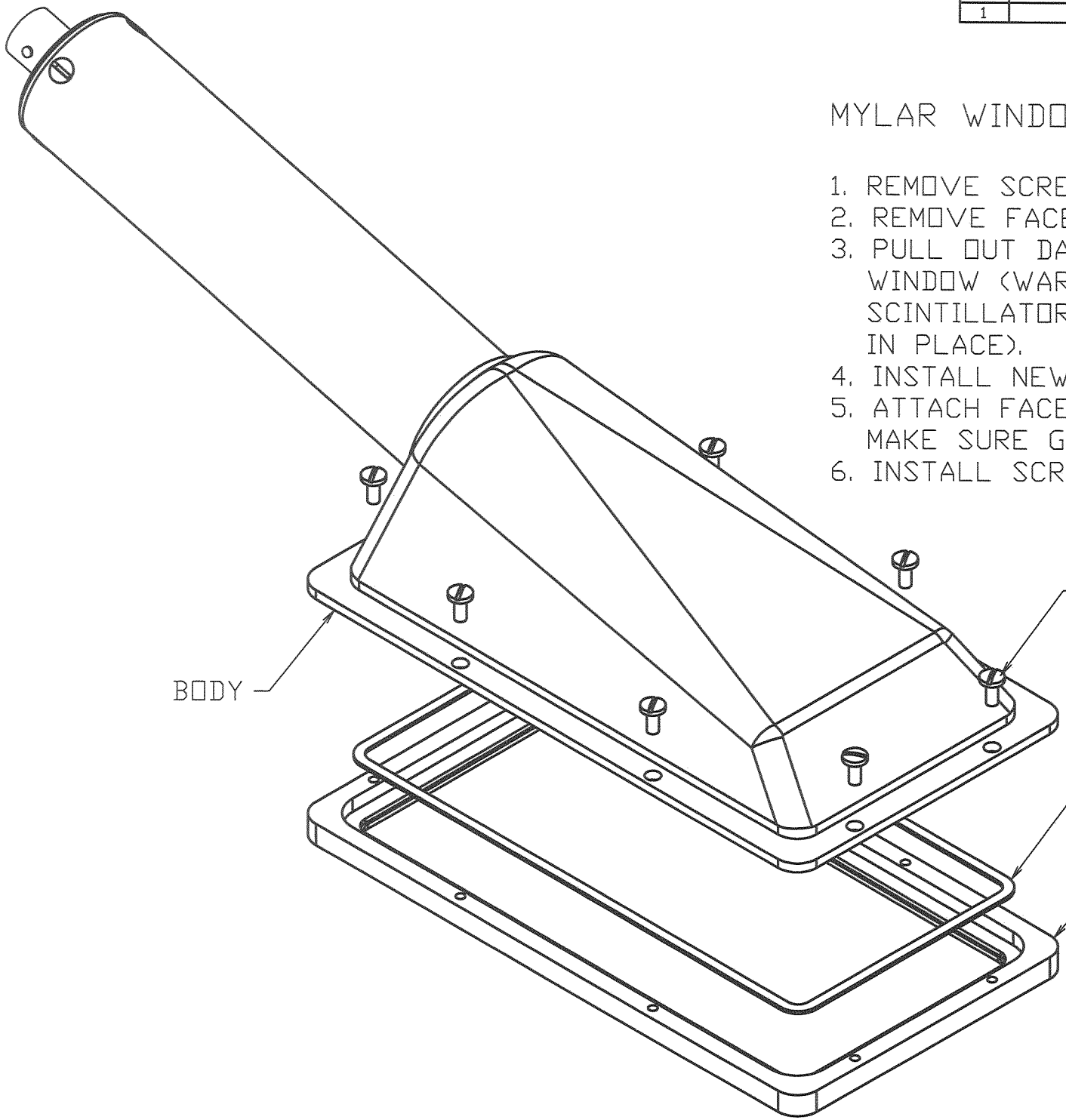

DWN	DATE	CHK	DATE	APP	DATE
CMC	1-27-11			JGW	1-27-11

DWG NUM: 4393-165 SCALE: FULL ☒ OTHER

TITLE M 43-92, M 43-93 MYLAR WINDOW

LUDLUM MEASUREMENTS, INC. 501 OAK STREET SWEETWATER, TEXAS 79556

SERIES	SHEET
393	165A

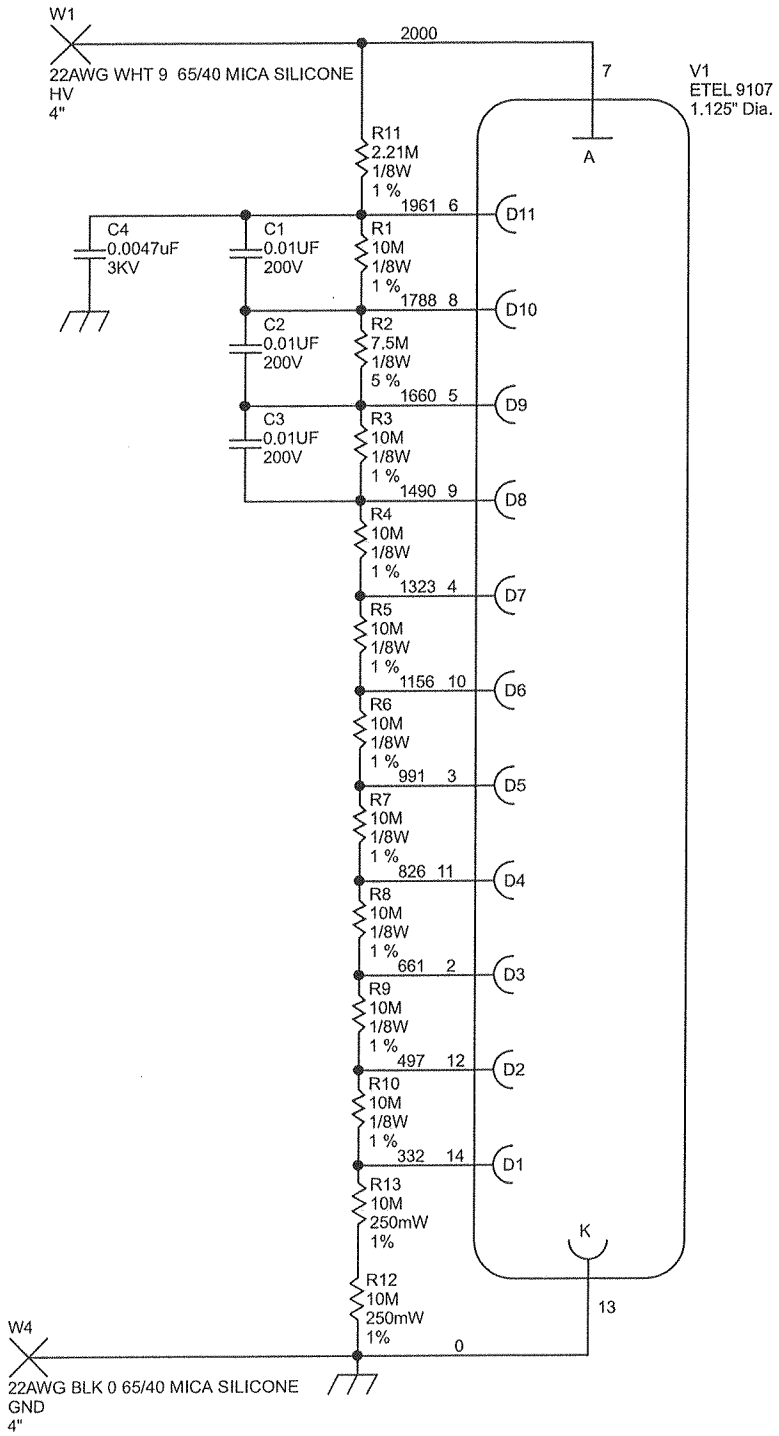

LUDLUM MEASUREMENTS, INC.

PO Box 810
501 Oak Street
Sweetwater, Texas 79556
U.S.A. 1-800-622-0828

Drawn: PAB	8/19/2015	Title: 1 1/8" VOLTAGE DIVIDER		
Design: LL	8/19/2015	Model: ETEL 9107		
		Board#: 5435-484		
Approved:		Sheet: 1 of 1	Series	Sheet
Print Date: 2/25/2016 2:39:31 PM		Rev: 1	435	1325

W:\Projects\LMI\VoltageDividers\5435-484\Rev1\435484R1P1.SchDoc

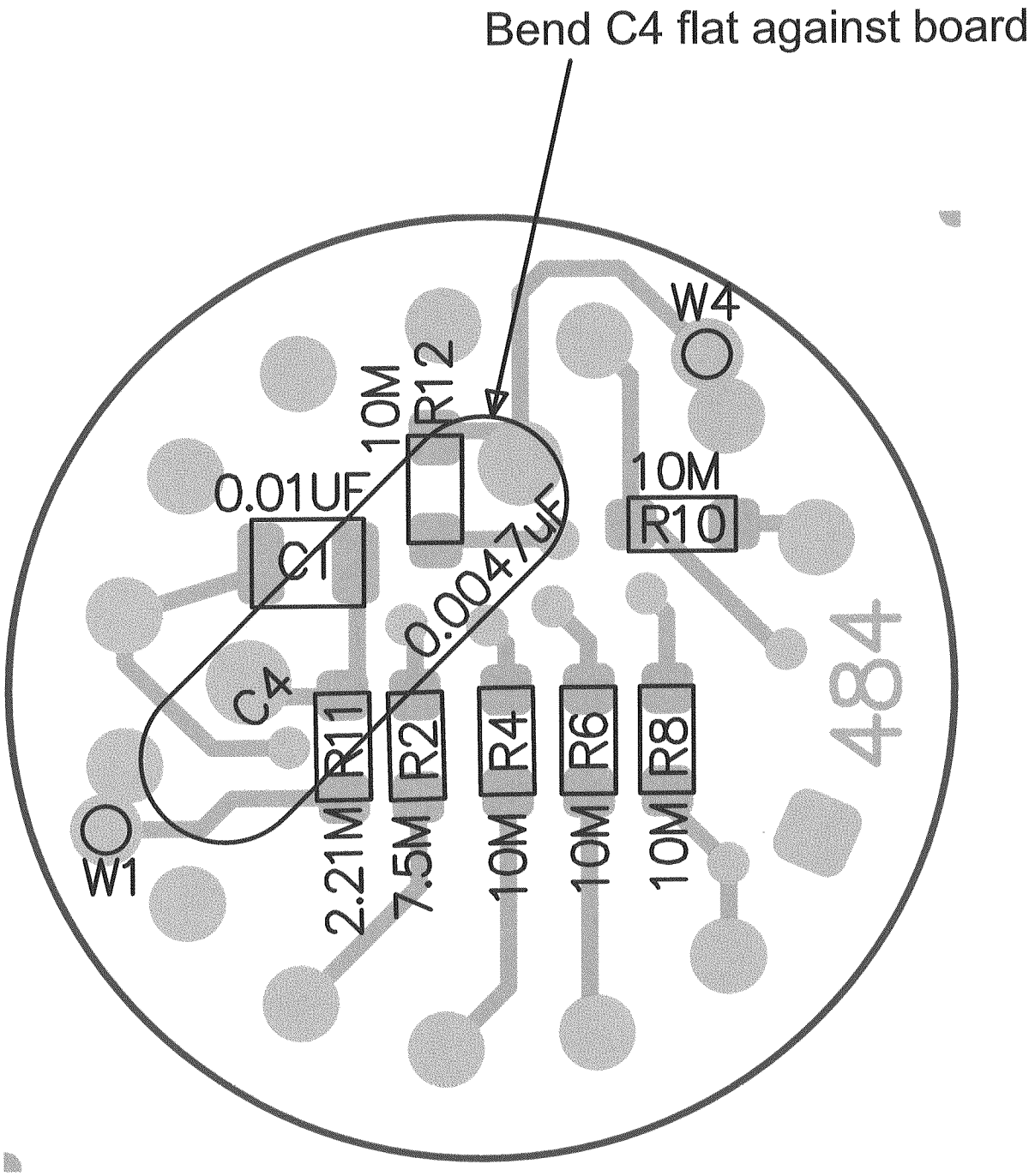

LUDLUM MEASUREMENTS, INC.		PO Box 810 501 Oak Street Sweetwater, TX 79556 U.S.A. 1-800-622-0828		
Title: 1 1/8" VOLTAGE DIVIDER				
Drawn: PAB	8/19/2015	**Model:** ETEL 9107		
Design: LL	8/19/2015	**Board#:** 5435-484		
Approve: RAE	22 JAN 16	**Rev:** 2		
PCBA Drawing		**SCALE: 1.08**	**Series**	**Sheet**
Print Date: 1/22/2016 4:43:42 PM		Top Overlay	435	1324
W:\Projects\LMI\VoltageDividers\5435-484\Rev1\435484R1_Assy.PcbDoc				

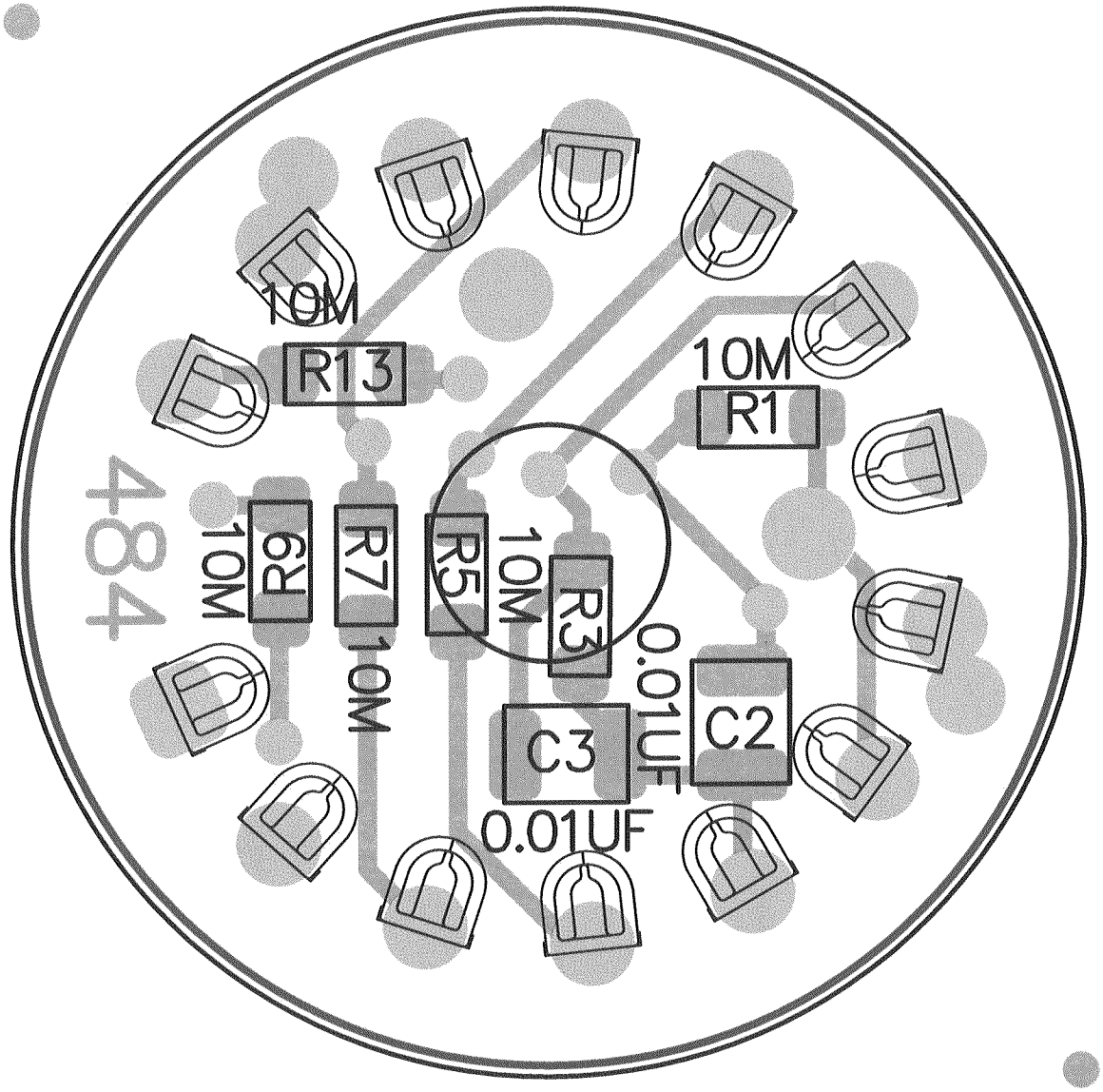

LUDLUM MEASUREMENTS, INC.		PO Box 810 501 Oak Street Sweetwater, TX 79556 U.S.A. 1-800-622-0828		
Title: 1 1/8" VOLTAGE DIVIDER				
Drawn: PAB	8/19/2015	**Model:** ETEL 9107		
Design: LL	8/19/2015	**Board#:** 5435-484		
Approve:		**Rev:** 1		
PCBA Drawing		**SCALE: 1.08**	**Series**	**Sheet**
Print Date: 3/9/2016 3:57:27 PM		Bottom Overlay	435	1324
W:\Projects\LMI\VoltageDividers\5435-484\Rev1\435484R1_Assy.PcbDoc				