Event: WELL MAINT - RIGLESS
Event End: 11/24/2008 00:00
Sec. Reason:
End Status: FINISHED - SUCCESS
Well Classification: DEVELOPMENT - CLASS II

OCCIDENTAL OF ELK HILLS INC

# 65X-365D-35S

Ground Level: 678.0ft
Datum: Original KB @ 687.00ft (default)
API No.: 0402955970

Wellbore: ORIGINAL HOLE
PBMD: 2,523.0ft
Btm TMD: 4,150.0ft
Spud Date: 9/4/1977 00:00
BH Coord X: 6,154,268.19uss ft
BH Coord Y: 2,288,639.92uss ft

Casing Shoes (ft) | Schematic (11/24/2008) | Openings Top/Btm/Type/Status

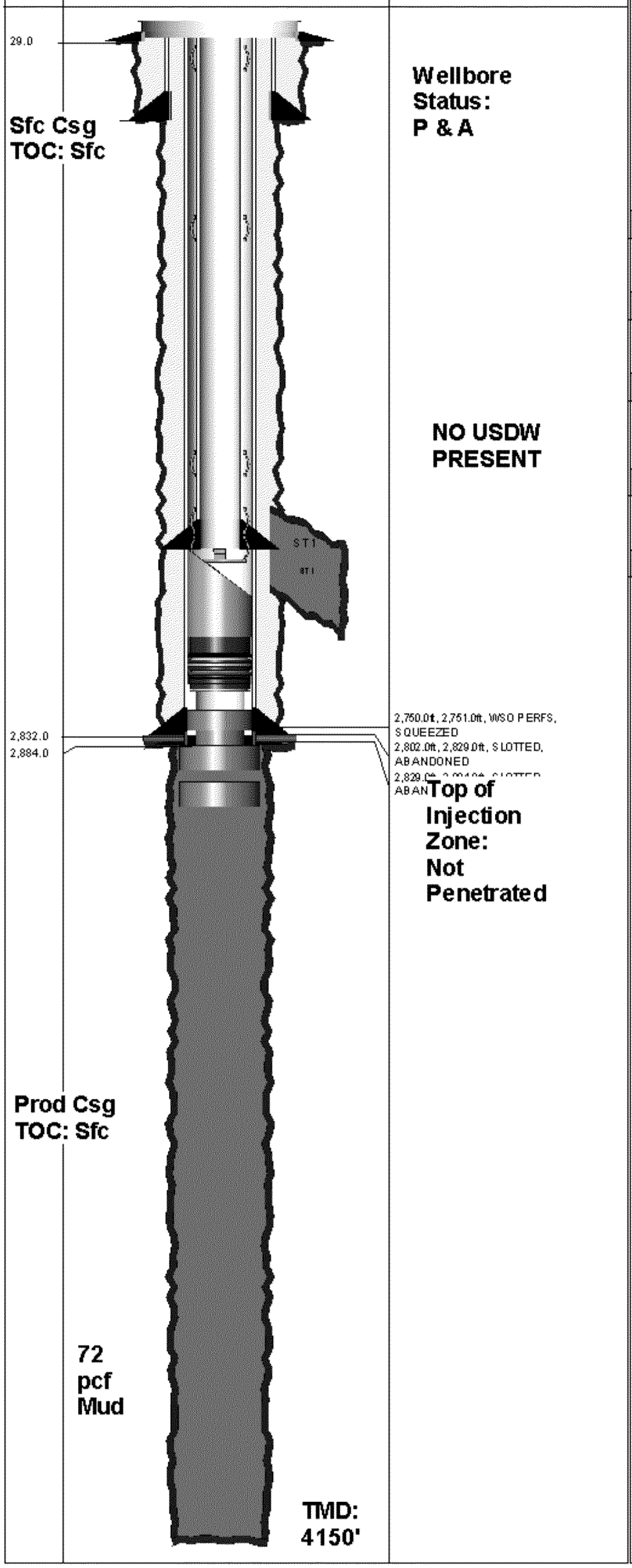


**TUBING STRING** Report Date: 6/18/2006 00:00

| Component | Top MD (ft) | Btm MD (ft) |
|---|---|---|
| TH-DBB | 9.0 | 9.6 |
| FATNIP | 9.6 | 10.3 |
| TBGJNT | 10.3 | 2,294.8 |
| GLM | 2,294.8 | 2,296.9 |
| TBGJNT | 2,296.9 | 4,018.3 |
| GLM | 4,018.3 | 4,020.3 |
| CAS | 4,020.3 | 5,205.6 |
| GLM | 5,205.6 | 5,207.6 |
| CAS | 5,207.6 | 5,972.8 |
| GLM | 5,972.8 | 5,974.8 |
| CAS | 5,974.8 | 6,006.0 |
| PKR-S | 6,006.0 | 6,009.9 |
| WLREG | 6,009.9 | 6,010.4 |

**MECHANICALITEM** Report Date: 7/8/2001 00:00

| Component | Top MD (ft) | Btm MD (ft) |
|---|---|---|
| WHIPST | 2,523.0 | 2,527.0 |

**PLUG BACK** Report Date: 5/18/2001 00:00

| Component | Top MD (ft) | Btm MD (ft) |
|---|---|---|
| BP-DR | 2,527.0 | 2,530.0 |

**PLUG BACK** Report Date: 5/17/2001 00:00

| Component | Top MD (ft) | Btm MD (ft) |
|---|---|---|
| CEMENT | 2,588.0 | 2,796.0 |
| CEMENT | 2,796.0 | 2,884.0 |

**PLUG BACK** Report Date: 9/11/1977 00:00

| Component | Top MD (ft) | Btm MD (ft) |
|---|---|---|
| CEMENT | 2,885.0 | 2,970.0 |

**PLUG BACK** Report Date: 9/11/1977 00:00

| Component | Top MD (ft) | Btm MD (ft) |
|---|---|---|
| CEMENT | 3,007.0 | 3,339.0 |

**CONDUCTOR CASING** Report Date: 8/5/1977 00:00

| Item | OD (in) | Grade | Wt. (ppf) | TopMD (ft) | BtmMD (ft) |
|---|---|---|---|---|---|
| CASING JOINT(S) | 16.000 | | | 9.0 | 29.0 |

**SURFACE CASING** Report Date: 9/5/1977 00:00

| Item | OD (in) | Grade | Wt. (ppf) | TopMD (ft) | BtmMD (ft) |
|---|---|---|---|---|---|
| CASING JOINT(S) | 10.750 | K-55 | 40.50 | 9.0 | 411.8 |
| GUIDE SHOE | 10.750 | | | 411.8 | 413.0 |

**PRODUCTION CASING** Report Date: 9/10/1977 00:00

| Item | OD (in) | Grade | Wt. (ppf) | TopMD (ft) | BtmMD (ft) |
|---|---|---|---|---|---|
| CASING JOINT(S) | 7.000 | K-55 | 23.00 | 9.0 | 2,829.6 |
| GUIDE SHOE | 7.000 | | | 2,829.6 | 2,832.0 |

**LINER** Report Date: 9/12/1977 00:00

| Item | OD (in) | Grade | Wt. (ppf) | TopMD (ft) | BtmMD (ft) |
|---|---|---|---|---|---|
| LINER HANGER | 6.366 | | | 2,796.0 | 2,801.0 |
| STAGE COLLAR | 5.500 | | | 2,801.0 | 2,802.0 |
| SLOTTED LINER | 5.500 | K-55 | 20.00 | 2,802.0 | 2,829.0 |
| SLOTTED LINER | 5.500 | K-55 | 20.00 | 2,829.0 | 2,883.5 |
| BULL PLUG | 5.500 | | | 2,883.5 | 2,884.0 |

**PRODUCTION CASING** Report Date: 7/18/2001 00:00

| Item | OD (in) | Grade | Wt. (ppf) | TopMD (ft) | BtmMD (ft) |
|---|---|---|---|---|---|
| CASING JOINT(S) | 4.500 | P-110 | 11.60 | 9.0 | 6,872.1 |
| FLOAT COLLAR | 4.500 | | | 6,872.1 | 6,873.3 |
| CASING JOINT(S) | 4.500 | P-110 | 11.60 | 6,873.3 | 6,953.7 |
| FLOAT SHOE | 4.500 | | | 6,953.7 | 6,955.0 |

Well: 65X-365D-35S S/T/R: 35S/30S/24E

CASING CEMENT DETAIL
- - -

Sfc Csg. Cmt Vol: 400 cf
Hole Size: 14.75"
Casing Size: 10.75"
Top Job: No
Rtns to Sfc: Yes (80 cf)
TOC: Sfc
- - -

Interm Csg. Cmt Vol:
Hole Size:
Casing Size:
Top Job:
Rtns to Sfc:
TTOC:
- - -

Prod. Csg. Cmt Vol: 1140 cf
Hole Size: 9.875"
Casing Size: 7"
Top Job: No
Rtns to Sfc: Yes (150 cf)
TOC: Sfc
- - -

Liner Cmt Vol: Landed
Hole Size: 13"
Casing Size: 5.5"
Top Job:
Rtns to Sfc:
TTOC:
- - -

Top of Injection Zone:
Not Penetrated
- - -

Volume Behind Pipe:
1.18 Yield Assumed
Theoretical Calculations (TTOC)
Apr 2012