OCCIDENTAL OF ELK HILLS INC

334-35S

Event: WELL MAINT - RIG
Event End: 9/7/2008 00:00
Sec. Reason: PIN PART
End Status: FINISHED - SUCCESS
Well Classification: DEVELOPMENT

Ground Level: 771.0ft
Datum: ORIGINAL KB @ 781.00ft (default)
API No.: 0402927775

Wellbore: ORIGINAL HOLE
PBMD: 7,502.0ft
Btm TMD: 7,550.0ft
Spud Date: 9/22/1953 00:00
BH Coord X: 6,152,368.52uss ft
BH Coord Y: 2,289,412.64uss ft

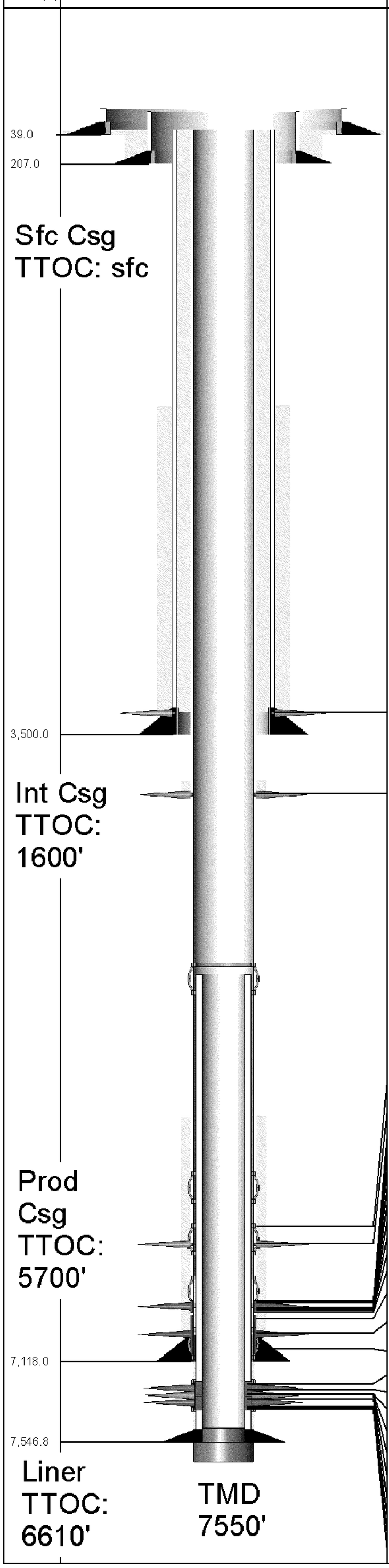

Openings Top/Btm/Type/Status

Tulare Zone Deemed An Exempt Aquifer By EPA

3,370.0ft, 3,371.0ft, PERFORATED, SQUEEZED

3,840.0ft, 3,841.0ft, PERFORATED, SQUEEZED

Top of Injection Zone B-Sand: 6763'

6,335.0ft, 6,336.0ft, WSO PERFS, SQUEEZED
6,434.0ft, 6,435.0ft, PERFORATED, SQUEEZED
6,765.0ft, 6,768.0ft, PERFORATED, OPEN
6,768.0ft, 6,771.0ft, PERFORATED, OPEN
6,776.0ft, 6,782.0ft, PERFORATED, OPEN
6,803.0ft, 6,806.0ft, PERFORATED, OPEN
6,806.0ft, 6,808.0ft, PERFORATED, OPEN
6,812.0ft, 6,816.0ft, PERFORATED, OPEN
6,816.0ft, 6,819.0ft, PERFORATED, OPEN
6,819.0ft, 6,824.0ft, PERFORATED, OPEN
6,829.0ft, 6,835.0ft, PERFORATED, OPEN
6,850.0ft, 6,885.0ft, PERFORATED, ABANDONED
6,900.0ft, 7,002.0ft, PERFORATED, ABANDONED
7,016.0ft, 7,072.0ft, PERFORATED, ABANDONED
7,232.0ft, 7,256.0ft, PERFORATED, OPEN
7,265.0ft, 7,292.0ft, PERFORATED, OPEN
7,303.0ft, 7,306.0ft, PERFORATED, OPEN
7,306.0ft, 7,310.0ft, REPERFORATED, OPEN
7,306.0ft, 7,310.0ft, PERFORATED, OPEN
7,306.0ft, 7,310.0ft, PERFORATED, SQUEEZED
7,310.0ft, 7,353.0ft, PERFORATED, OPEN
7,368.0ft, 7,380.0ft, PERFORATED, OPEN
7,380.0ft, 7,385.0ft, PERFORATED, OPEN
7,385.0ft, 7,400.0ft, PERFORATED, OPEN

TUBING STRING — Report Date: 9/6/2008 00:00

Component	Top MD (ft)	Btm MD (ft)
TH-DBB	10.0	10.7
FATNIP	10.7	11.4
TBGJNT	11.4	6,458.5
AC	6,458.5	6,460.9
TBGJNT	6,460.9	6,520.6
XO	6,520.6	6,521.7
TBGJNT	6,521.7	7,354.2
STNIP	7,354.2	7,355.3
TBGJNT	7,355.3	7,386.5

PLUG BACK — Report Date: 8/4/2002 00:00

Component	Top MD (ft)	Btm MD (ft)
CEMENT	7,502.0	7,546.8

PLUG BACK — Report Date: 8/4/2002 00:00

Component	Top MD (ft)	Btm MD (ft)
CEMENT	7,546.8	7,550.0

ROD STRING — Report Date: 9/7/2008 00:00

Component	Top MD (ft)	Btm MD (ft)
POLRDL	0.0	30.0
PNYROD	30.0	38.0
ROD	38.0	248.0
R-4PER	248.0	1,448.0
ROD	1,448.0	2,618.0
ROD	2,618.0	3,998.0
R-4PER	3,998.0	4,598.0
R-4PER	4,598.0	5,918.0
ROD	5,918.0	6,728.0
ROD	6,728.0	7,328.0
RSTBAR	7,328.0	7,332.0
INSPMP	7,332.0	7,362.0

CONDUCTOR CASING — Report Date: 8/12/1953 00:00

Item	OD (in)	Grade	Wt. (ppf)	TopMD (ft)	BtmMD (ft)
CASING JOINT(S)	26.000		68.00	10.0	39.0

SURFACE CASING — Report Date: 9/22/1953 00:00

Item	OD (in)	Grade	Wt. (ppf)	TopMD (ft)	BtmMD (ft)
CASING JOINT(S)	16.000	H-40	65.00	10.0	207.0

INTERMEDIATE CASING — Report Date: 9/27/1953 00:00

Item	OD (in)	Grade	Wt. (ppf)	TopMD (ft)	BtmMD (ft)
CASING JOINT(S)	10.750	J-55	45.50	10.0	75.0
CASING JOINT(S)	10.750	J-55	40.50	75.0	2,470.0
CASING JOINT(S)	10.750	J-55	45.50	2,470.0	3,500.0

PRODUCTION CASING — Report Date: 10/14/1953 00:00

Item	OD (in)	Grade	Wt. (ppf)	TopMD (ft)	BtmMD (ft)
CASING JOINT(S)	7.000	N-80	26.00	10.0	52.0
CASING JOINT(S)	7.000	N-80	23.00	52.0	5,909.0
CASING JOINT(S)	7.000	S-95	26.00	5,909.0	7,116.0
FLOAT SHOE	7.000			7,116.0	7,118.0

LINER — Report Date: 8/4/2002 00:00

Item	OD (in)	Grade	Wt. (ppf)	TopMD (ft)	BtmMD (ft)
LINER HANGER PACKER	5.875			6,610.0	6,631.6
LINER HANGER	5.934			6,631.6	6,637.3
PBR	5.520			6,637.3	6,640.6
CROSSOVER	5.520			6,640.6	6,641.7
CASING JOINT(S)	5.000	N-80	15.00	6,641.7	7,502.3
LANDING COLLAR	4.550			7,502.3	7,503.5
CASING JOINT(S)	5.000	N-80	15.00	7,503.5	7,544.0
FLOAT SHOE	4.550			7,544.0	7,546.8

Well: 334-35S S/T/R: 35S/30S/24E

CASING CEMENT DETAIL
- - -
Sfc Csg. Cmt Vol: 590 cf
Hole Size: 22"
Casing Size: 16"
Top Job: NO
Rtns to Sfc: NO
TTOC: Surface
- - -

Interm Csg. Cmt Vol: 920 cf
Hole Size: 15"
Casing Size: 10-3/4"
Top Job: NO
Rtns to Sfc: NO
TTOC: 1600'
- - -

Prod. Csg. Cmt Vol: 590 cf
Hole Size: 9-3/4"
Casing Size: 7"
Top Job: NO
Rtns to Sfc: NO
TTOC: 5700'
- - -

Liner Cmt Vol: 135 cf
Hole Size: 6-1/8"
Casing Size: 5"
Top Job: NO
Rtns to Sfc: NO
TTOC: 6610'
- - -

Top of Formation:
B-Sand: 6763'

- - -

Volume Behind Pipe:
1.18 and 1.15 Yield Assumed
Theoretical Calculations (TTOC)
DWN April 2011