Oil Field Steam Injection Well Connections

Hyspan Barco Type N Style B, ASME Class and QM150 ball joints are commonly used to compensate for the thermal expansion of steam injection wells in oil fields. Depending on the well design, the growth can be as great as 1.2 meters (39-79 inches). The recommended ball joint installation for this application is a scissors arrangement shown in the adjacent illustration and photograph below. This arrangement deflects the ball joints in rotation.

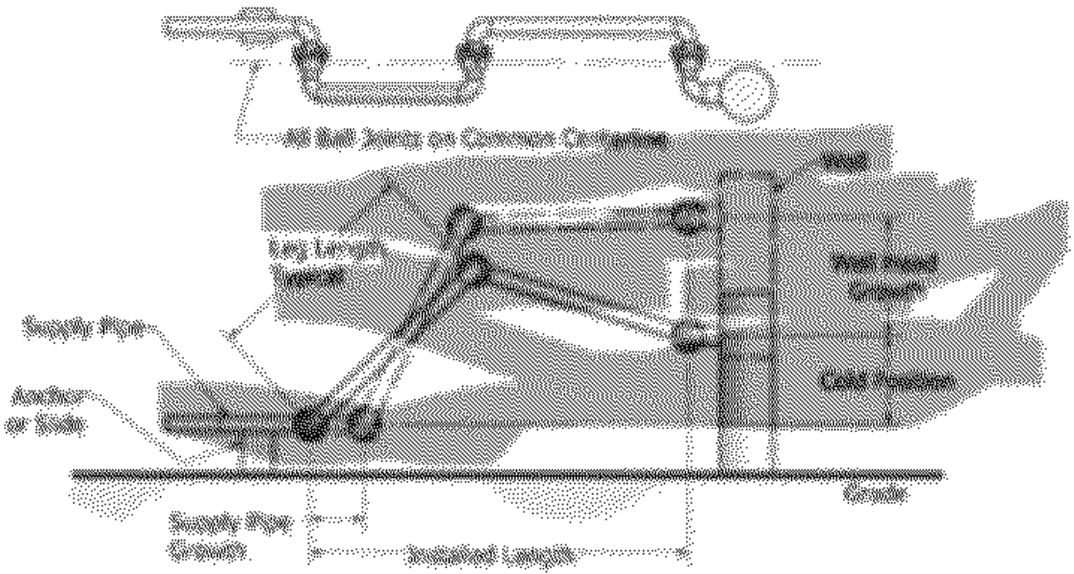

Ball Joint Scissors

There are several important elements of this design:

- The orientation of the connections to the well head and supply pipe can be different than the illustration, but the center of rotation of all three ball joints must be in the same plane. For sizes 5" NPS and larger, the scissor linkage must be guided and supported to maintain the in-plane alignment and to react the weight of the linkage.
- The supply pipe must be anchored (Main Anchor) as close as possible to the first ball joint. This anchor must be rigid and capable of reacting forces and moments in all planes with the exception (optional) that the supply pipe thermal expansion can be absorbed by allowing the pipe to travel horizontally through the anchor as illustrated. The purpose of the anchor is to maintain the position and configuration of the scissors linkage, react the forces and moments resulting from the internal resistance of the ball joints, and react the forces and moments within the supply piping.
- The supply pipe connection and well head connection can be at the same elevation or at different elevations as shown in the illustration. The well head "tree" provides an anchor that reacts the forces and moments resulting from the internal resistance of the scissors. The scissors connection to the "tree" should be as close as possible – avoid any long overhangs that provide a moment arm from the "tree" to the scissors.
- The included angle between the legs of the scissors should be approximately 90° at the installed condition, and should not exceed 130° when the well head is fully extended.
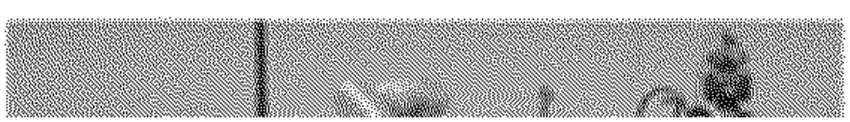
As a design aid, the Technical Assistance section includes design recommendations for the scissors [illegible]