HORIZON ENGINEERING LLC

13585 N.E. Whitaker Way • Portland, OR 97230
Phone (503)255-5050 • Fax (503)255-0505
www.horizonengineering.com

Project No. 4212

Permit No. 11656

SOURCE EVALUATION REPORT

Saint-Gobain Containers, Inc.
Seattle, Washington

Glass Melting Furnace No. 3
Total Chrome

Glass Melting Furnace No. 4
Nitrogen Oxides and Sulfur Dioxide

February 8, 2011

Test Site:
Saint-Gobain Containers, Inc.
5801 East Marginal Way S.
Seattle, Washington 98134

Air Pollution Emission Testing

TABLE OF CONTENTS

	Page Number
1. CERTIFICATION	4
2. INTRODUCTION	5
3. SUMMARY OF RESULTS	7
4. SOURCE DESCRIPTION AND OPERATION	11
5. SAMPLING AND ANALYTICAL PROCEDURES	13
6. DISCUSSION	16

APPENDIX

Abbreviations & Acronyms 17

Nomenclature & Drift Correction Documentation 19

Furnace No. 3: Total Chrome

Total Chrome and Flow Rate Results 21

Example Calculations 25

Field Data 30

Sample Recovery Field Data and Worksheets 33

Laboratory Results and COC 35

Traverse Point Locations 52

Tedlar Bag Field Data (See Furnace 4 Field Data Sh eet) 57

Furnace No. 4: SO_2 and NO_x

Results and Example Calculations 53

O_2 & CO_2 for Molecular Weight Determinations 56

Analyzer Calibration Field Data and QA Checks 57

Data Logger Gas Charts & Printouts 59

3-Point Stratification Check 66

APPENDIX (Continued) Page Number

Furnace No. 4: Flow Rate and Moisture
Results and Example Calculations 67
Field Data 70
Moisture Catch Field Data & Worksheets 73
Traverse Point Locations 75
Calibration Information
Meter Boxes 76
Calibration Critical Orifices 81
Standard Meter 83
Pitots 84
Thermocouples and Indicators 87
Nozzle Diameters (See Furnace 3 Field Data Sheets) 30
Barometer 95
Calibration Gas Certificates 96
QA/QC Documentation
Procedures 102
NO_x Analyzer Converter Efficiency Data 105
Analyzer Interference Response Data 106
Correspondence
Source Test Plan and Correspondence 110
Permit (Selected Pages) 119

1. CERTIFICATION

1.1 Test Team Leader

I hereby certify that the test detailed in this report, to the best of my knowledge, was accomplished in conformance with applicable rules and good practices. The results submitted herein are accurate and true to the best of my knowledge.

Name: Preston Skaggs

Signature _____ Date 20110317

1.2 Report Review

I hereby certify that I have reviewed this report and find it to be true and accurate, and in conformance with applicable rules and good practices, to the best of my knowledge.

Name: David Bagwell, QSTI

Signature _____ Date 3/17/11

1.3 Report Review

I hereby certify that I have reviewed this report and find it to be true and accurate, and in conformance with applicable rules and good practices, to the best of my knowledge.

Name: Michael E. Wallace, PE

Signature _____ Date 3/17/11

2. INTRODUCTION

2.1 Test Site: Saint-Gobain Containers, Inc.
5801 East Marginal Way S.
Seattle, Washington 98134

2.2 Mailing Address: 1509 S. Macedonia Avenue
P.O. Box 4200
Muncie, IN 47307-4200

2.3 Test Log:

Glass Melting Furnace No. 3: Total Chrome

Test Date	Run No.	Test Time
February 8, 2011	1	07:56 – 09:56
"	2	10:28 – 12:28
"	3	12:55 – 14:55

Summary: Three valid 120-minute runs

Glass Melting Furnace No. 4: NO_x and SO_2

Test Date	Run No.	Test Time
February 8, 2011	1	08:33 – 09:34
"	2	10:19 – 11:20
"	3	12:17 – 13:19
	4	13:47 – 14:48

Summary: Three valid runs (Run 1 was discarded due to a melted sample line)

2.4 Test Purpose: Compliance with Permit No. 11656. NO_x and SO_2 testing for Furnace No. 4 was done in accordance with the Global Consent Decree (GCD) that was entered on May 7, 2010, negotiated between Saint- Gobain Containers, Inc., the EPA and affected states. Chrome testing for Furnace No. 3 was done to demonstrate compliance with the National Emission Standard for Hazardous Air Pollutants for Glass Manufacturing Area Sources, 40 CFR Part 63, Subpart SSSSSS for affected sources. SGCI previously tested Furnace 3 for chromium and demonstrated compliance with the National Emission Standard for

Hazardous Air Pollutants for Glass Manufacturing Area Sources, 40 CFR Part 63, Subpart SSSSSS for affected sources. However, the earlier test was performed when the furnace was manufacturing the color *antique*. SGCI performed this subsequent test during the manufacture of *champagne green* colored glass which has a higher chromium input in the batch. Note that other furnaces have been tested when running *champagne green* and demonstrated compliance.

2.5 Background Information: None

2.6 Participants:

Horizon Personnel:

Preston Skaggs, Team Leader
Matt Busch, Matt Caron and Kyle R. Kline, Field Technicians
Michael E. Wallace, PE, Calculations and QA/QC
David Bagwell, QSTI, Report Review
Christopher D. Lovett, Technical Writer

Test Arranged by: Jayne Browning, Saint-Gobain Containers, Inc.

Observers:

Plant Personnel: Marlon Trigg, Saint-Gobain Contai ners, Inc.
Agency Personnel: Gerry Pade, PSCAA

Test Plan Sent to: Gerry Pade, PSCAA

3. SUMMARY OF RESULTS

3.1 Table of Results:

Table 1

Furnace No. 3 – Total Chrome Test Results

Test Date: February 8, 2011	**Units**	**Run 1**	**Run 2**	**Run 3**	**Average**
Start Time		07:56	10:28	12:55	
End Time		09:56	12:28	14:55	
Sampling Time	minutes	120	120	120	120
Sampling Results					
Total Chrome					
Concentration	µg/dscm	619	971	1,040	878
Rate	lb/hr	0.039	0.060	0.065	0.054
Production-Based	lb/ton	0.0047	0.0073	0.0079	0.0066
Subpart SSSSSS Limit	lb/ton				0.02
Sample Volume	dscf	67.6	66.0	67.2	66.9
Sample Volume	dscm	1.9	1.9	1.9	1.9
Percent Isokinetic	%	94	95	94	94
Sample Weight, Total	µg	1,185	1,814	1,987	1,662
O_2	%	20.0	19.9	19.8	19.9
CO_2	%	3.3	3.6	3.6	3.5
Source Parameters					
Flow Rate (Actual)	acf/min	28,400	27,300	28,200	28,000
Flow Rate (Standard)	dscf/min	16,700	16,400	16,600	16,500
Temperature	°F	389	377	389	385
Moisture	%	6.7	6.2	6.7	6.5
Process/Production Data					
Glass Pull Rate	ton/hr	8.18	8.18	8.18	8.18

Table 2
Furnace No. 4 – SO_2 and NO_x Test Results

Test Date: February 8, 2011	**Units**	**Run 2**	**Run 3**	**Run 4**	**Average**
Start Time		10:19	12:17	13:47	
End Time		11:20	13:19	14:48	
Sampling Time	minutes	60	60	60	60
Gaseous Emissions					
SO_2 Concentration	ppmv	32	30	30	31
Mass Rate	lbm-SO_2/hr	5.4	4.5	4.7	4.9
Production Based Rate	lbm-SO_2/ton	1.0	0.86	0.90	0.93
Permit Limit (GCD)					2.5
NO_x Concentration	ppmv	381	384	362	376
Mass Rate	lbm-NO_x/hr	46.6	42.4	40.9	43.3
Production Based Rate	lbm-NO_x/ton	8.9	8.1	7.8	8.2
Interim Emission Factor (GCD)	lbm-NO_x/ton				14.4
Source Parameters					
Flow Rate (Actual)	acf/min	27,700	25,100	25,900	26,200
Flow Rate (Standard)	dscf/min	17,100	15,400	15,800	16,100
O_2	%	16.6	16.6	16.7	16.6
CO_2	%	3.8	3.7	3.6	3.7
Temperature	°F	363	365	366	364
Moisture	%	5.2	5.0	5.5	5.2
Process/Production Data					
Glass Pull Rate	ton/hour	5.26	5.26	5.26	5.26

3.2 Discussion of Errors and Quality Assurance Procedures: This table is taken from a paper entitled "Significance of Errors in Stack Sampling Measurements," by R.T. Shigehara, W.F. Todd and W.S. Smith. It summarizes the maximum error expressed in percent, which may be introduced into the test procedures by equipment or instrument limitations.

Measurement	% Max Error
Stack Temperature Ts	1.4
Meter Temperature Tm	1.0
Stack Gauge Pressure Ps	0.42
Meter Gauge Pressure Pm	0.42
Atmospheric Pressure Patm	0.21
Dry Molecular Weight Md	0.42
Moisture Content Bws (Absolute)	1.1
Differential Pressure Head ΔP	10.0
Orifice Pressure Differential ΔH	5.0
Pitot Tube Coefficient Cp	2.4
Orifice Meter Coefficient Km	1.5
Diameter of Probe Nozzle Dn	0.80

3.2.1 Manual Methods: QA procedures outlined in the test methods were followed, including equipment specifications and operation, calibrations, sample recovery and handling, calculations and performance tolerances.

On-site quality control procedures include pre- and post-test leak checks on the sampling system and pitot lines. If pre-test checks indicate problems, the system is fixed and rechecked before starting testing. If post-test leak checks are not acceptable, the test run is voided and the run is repeated. The results of the leak checks for the test runs are on the Field Data sheets.

Thermocouples used to measure the exhaust temperature are calibrated in the field using EPA Alternate Method 11. A single-point calibration on each thermocouple system using a reference thermometer is performed.

Thermocouples must agree within ±2°F with the reference thermometer. Also, prior to use, thermocouple systems are checked for ambient temperature before heaters are started or readings are taken. Nozzles are inspected for nicks or dents and pitots are examined before and after each use to confirm that they are still aligned. The results were within allowable tolerances. Pre- and post-test calibrations on the meter boxes are included with the report along with semi-annual calibrations of critical orifices, pitots, nozzles, and thermocouples (sample box impinger outlet and oven, meter box inlet and outlet, and thermocouple indicators).

3.2.2 Continuous Analyzer Gas Sampling: The QA procedures from EPA Method 7E in Title 40 CFR Part 60, Appendix A, July, 2008 were done for O_2, CO_2 and SO_2 gas analyses. Analyzer system checks are noted on the Calibration Field Record sheet, with procedures documented in the QA/QC section in the Appendix. All calibration standards used in the testing were EPA Protocol 1. Certificates for the gas cylinders are included in the Appendix.

A stratification check was done on the exhaust of Furnace No. 4 and it was not found to be stratified as defined by EPA Method 7E. Gases were therefore sampled at a single point, the centroid, of the exhaust stack.

3.2.3 Tedlar Bag Gas Sampling and Analysis: The QA procedures from EPA Method 3/3A in Title 40 CFR Part 60, Appendix A, July, 2007 were followed for gas sampling and analysis. Analyzer system checks are noted on the Calibration Field Record sheet, with procedures documented in the QA/QC section of the Appendix. All calibration standards used in the testing were EPA Protocol 1. Gas certificates are in the Appendix.

4. SOURCE DESCRIPTION AND OPERATION

4.1 Process and Control Device Description and Operation:
There are four glass-melting furnaces at the Saint-Gobain plant in Seattle, WA. Furnace No. 3 is oxy-fuel fired, with oxygen gas being used to support combustion rather than ambient air. This process results in greater overall energy efficiency, improved energy transfer to the glass, and a significant reduction in NO_x emissions. The primary fuel source of Furnace No. 3 is natural gas with additional energy input from electricity delivered through electrodes immersed in the glass (electric boosting).

Furnace No. 4 is an end-port regenerative furnace and is air-fuel fired, also utilizing natural gas as its primary fuel source. As a regenerative furnace, its increased fuel efficiency is realized by utilizing the heat generated in the combustion process to preheat the air and fuel used in further combustion processes. Additionally, increased thermal efficiency is realized by the regenerative furnace in providing heat to the primary glass-melting process itself.

4.2 Test Ports: Both of the ducts were steel, circular, vertical, and without flow straighteners or extensions. Two ports were sampled at the Furnace No. 4 exhaust. Only one port was accessible for sampling on the exhaust duct of Furnace No. 3, therefore it did not meet EPA Method 1 Criteria.

Both ducts were sampled using the maximum number of traverse points indicated in EPA Method 1, 11.2.2, Figures 1-1 and 1-2. Port and traverse point locations are described and diagrammed on the Field Data sheets.

The exhaust ducts of Furnace Nos. 3 and 4 are tapered. The angles of taper of these two furnace exhausts are 3° and 5° respectively. Both ducts can be considered straight for meeting EPA Method 1 criteria as discussed in the EPA document, "Guidelines for Sampling in Tapered Stacks," by T.J. Logan and R.T. Shigehara (1978). According to this document, if the angle of the stack wall taper is less than 15° the duct is to be considered straight.

4.2.1 Individual Test Duct Characteristics:

Furnace No. 3	Furnace No. 4
Construction: Steel	Construction: Steel
Shape: Circular (tapered)	Shape: Circular
Size: 49 inches inside diameter	Size: 40.25 inches inside diameter
Orientation: Vertical	Orientation: Vertical
Flow straighteners: None	Flow straighteners: None
Extension: None	Extension: None
Cyclonic Flow: None expected	Cyclonic Flow: No Cyclonic flow expected
Meets EPA Method 1 Criteria: No, only 1 port is accessible for sampling	Meets EPA Method 1 Criteria: Yes

4.2.2 Cyclonic Flow Check: Cyclonic flow checks were done at the exhausts of Furnaces 3 and 4 during previous testing on September 22, 2005. During the cyclonic flow check, null angles were measured using a digital protractor and it was verified that the average angle of flow was less than twenty degrees from vertical, indicating the absence of cyclonic flow.

4.3 Operating Parameters: Confidential batch composition information is not included in the official report, but will be provided to PSCAA as a supplementary enclosure.

4.4 Process Startups/Shutdowns or Other Operational Changes During Tests: Process was continuous during testing.

5. SAMPLING AND ANALYTICAL PROCEDURES

5.1 Sampling Procedures:

5.1.1 Sampling and Analytical Methods: Testing was in accordance with procedures and methods listed in the Source Test Plan dated January 5, 2011 (see Correspondence Section in the Appendix), including the following: EPA Methods in 40 CFR Part 60, Appendix A, July 1, 2007.

Glass Melting Furnace No. 3
Flow Rate: EPA Methods 1 and 2 (pitot traverses w/P SCAA Method 29)
CO_2 and O_2: EPA Method 3/3A (integrated bag samples NDIR and paramagnetic analyzers)
Moisture: EPA Method 4 (incorporated w/EPA Method 2 9)
Chrome: EPA Method 29 (isokinetic impinger techniqu e with analysis by ICP-OES/ICP-MS)

Glass Melting Furnace No. 4
Flow Rate: EPA Methods 1 and 2 (S-type pitot flow t raverses)
CO_2 and O_2: EPA Method 3A (NDIR and paramagnetic analyzers)
Moisture: EPA Method 4 (impinger train technique)
SO_2: EPA Method 6C (non-dispersive ultraviolet analyz er)
NO_x: EPA Method 7E (chemiluminescent analyzer)

5.1.2 Sampling Notes: None

5.1.3 Laboratory Analysis:

Analyte	Laboratory
Chrome	Columbia Analytical Services, Kelso, WA

5.2 Sampling Train Diagrams:

Figure 1

EPA Method 29 Chrome Sample Train Diagram

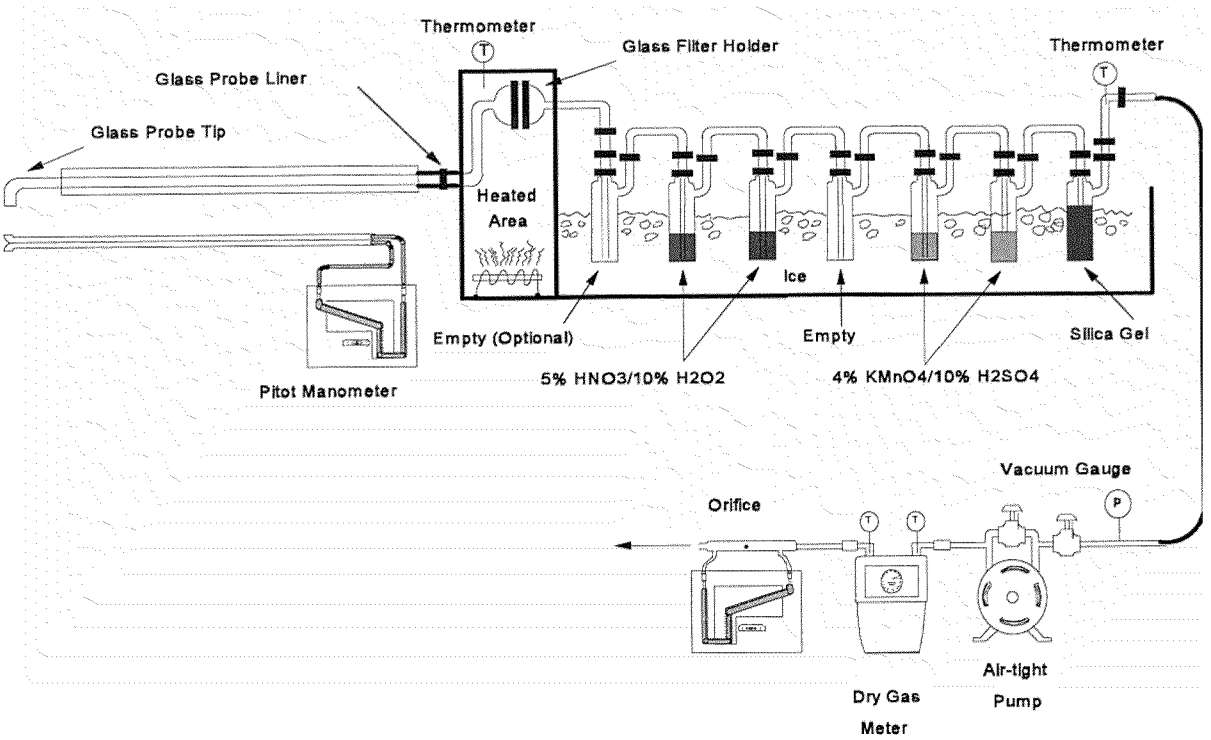

Figure 2

EPA Methods 3A, 6C and 7E Analyzer Sample System Diagram

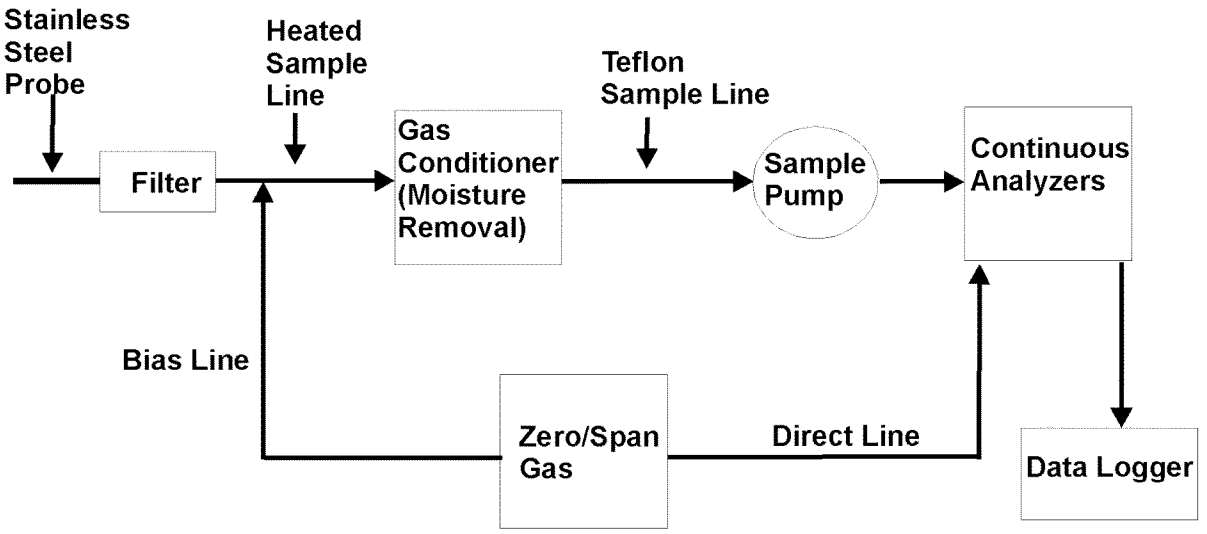

5.2.1 Diagram Exceptions: Impingers 4, 5 and 6 of the EPA Method 29 sampling train were not used (these are not necessary unless mercury is to be tested).

5.3 Horizon Test Equipment:

5.3.1 Manual Methods:

Equipment Name	**Identification**
Isokinetic Meter Boxes	CAE Express, Horizon No. 3 & No. 19
Inclined Liquid Manometers	Incorporated with meter boxes
Probe Liners	Borosilicate Glass
Pitots and Thermocouples	3s-1, 4-5, 5-5, PS-5H
Nozzles	0.2933, 0.2915
Barometer	Test Van III

5.3.2 CEM Analyzers and Methods:

Gas	**Brand**	**Model**	**Cal. Span**	**Measurement**	**Method**
O_2	Servomex	1400	22.22%	Paramagnetic	3/3A
CO_2	Servomex	1440	21.23%	Chopperless NDIR	3/3A
NO_x	Thermo Env	42i	968 ppm	Chemiluminescent	7E
SO_2	West. Resch	721M	48.5 ppm	Non-Dispersive Ultraviolet	6C

5.3.3 CEMS Sampling Setup:

CO_2, O_2, NO_x and SO_2 Sampling:
Sample Location: Fixed point near the centroid of the exhaust
Probe: Heated Stainless
Conditioning: Horizon 286 thermoelectrically cooled conditioner
Sample Line(s): Teflon (heated to sample conditioner & unheated to pump)
Pump: Teflon lined
Data Logger: Keithley (PC based) with Test Point software

5.3.4 Bag Sampling Setup:

Integrated Tedlar bag samples were taken from the orifice exhaust of the isokinetic meter box used for flow and moisture determinations during Furnace No. 3 testing. The bag contents were then analyzed using the instruments listed above.

6. DISCUSSION

The results of the testing should be valid in all respects. All quality assurance checks including leak checks, instrument checks, and calibrations, were within method-allowable tolerances.

APPENDIX

Abbreviations & Acronyms

Abbreviations and Acronyms Used in the Report

AAC	Atmospheric Analysis & Consulting, Inc.
ACDP	Air Contaminant Discharge Permit
ADEC	Alaska Department of Environmental Conservation
ADL	Above Detection Limit
BAAQMD	Bay Area Air Quality Management District
BACT	Best Achievable Control Technology
BDL	Below Detection Limit
BHP	Boiler Horsepower
BIF	Boiler and Industrial Furnace
BLS	Black Liquor Solids
C	Carbon
C_3H_8	Propane
CAS	Columbia Analytical Laboratory
CEM	Continuous Emissions Monitor
CEMS	Continuous Emissions Monitoring System
CERMS	Continuous Emissions Rate Monitoring System
CET	Calibration Error Test
CFR	Code of Federal Regulations
CGA	Cylinder Gas Audit
CH_2O	Formaldehyde
CH_4	Methane
Cl_2	Chlorine
ClO_2	Chlorine Dioxide
CNCG	Concentrated Non-Condensable Gas
CO	Catalytic Oxidizer
CO_2	Carbon Dioxide
COC	Chain of Custody
CTM	Conditional Test Method
CTO	Catalytic Thermal Oxidizer
Dioxins	Polychlorinated Dibenzo-p-dioxins (PCDD's)
DLL	Detection Level Limited
DNCG	Dilute Non-Condensable Gas
dscf	Dry Standard Cubic Feet
EIT	Engineer in Training
EPA	Environmental Protection Agency
ESP	Electrostatic Precipitator
EU	Emission Unit
FID	Flame Ionization Detector
Furans	Polychlorinated Dibenzofurans (PCDF's)
GC	Gas Chromatography
gr/dscf	Grains Per Dry Standard Cubic Feet
H_2S	Hydrogen Sulfide
HAP	Hazardous Air Pollutant
HCl	Hydrogen Chloride
HRSG	Heat Recovery Steam Generator
IDEQ	Idaho Department of Environmental Quality
lb/hr	Pounds Per Hour
LRAPA	Lane Regional Air Protection Agency
MACT	Maximum Achievable Control Technology
MDI	Methylene Diphyenyl Diisocyanate
MDL	Method Detection Limit
MEK	Methyl Ethyl Ketone
MeOH	Methanol
MMBtu	Million British Thermal Units
MRL	Method Reporting Limit
MS	Mass Spectrometry
MSF	Thousand Square Feet

NCASI	National Council for Air and Steam Improvement
NCG	Non-condensable Gases
NCUAQMD	North Coast Unified Air Quality Management District
NDIR	Non-dispersive Infrared
NESHAP	National Emissions Standards for Hazardous Air Pollutants
NIOSH	National Institute for Occupational Safety and Health
NIST	National Institute of Standards and Technology
NMVOC	Non-Methane Volatile Organic Compounds
NO_x	Nitrogen Oxides
NPD	Nitrogen Phosphorus Detector
O_2	Oxygen
ODEQ	Oregon Department of Environmental Quality
ORCAA	Olympic Region Clean Air Agency
PAHs	Polycyclic Aromatic Hydrocarbons
PCWP	Plywood and Composite Wood Products
PE	Professional Engineer
PM	Particulate Matter
ppbv	Parts Per Billion by Volume
ppmv	Parts Per Million by Volume
PS	Performance Specification
PSCAA	Puget Sound Clean Air Agency
PSEL	Plant Site Emission Limits
psi	pounds per square inch
PTE	Permanent Total Enclosure
PTM	Performance Test Method
QA/QC	Quality Assurance and Quality Control
QSTI	Qualified Source Testing Individual
RA	Relative Accuracy
RAA	Relative Accuracy Audit
RACT	Reasonably Available Control Technology
RATA	Relative Accuracy Test Audit
RCTO	Rotary Concentrator Thermal Oxidizer
RM	Reference Method
RTO	Regenerative Thermal Oxidizer
SCD	Sulfur Chemiluminescent Detector
SCR	Selective Catalytic Reduction System
SO_2	Sulfur Dioxide
SOG	Stripper Off-Gas
SWCAA	Southwest Clean Air Agency
TAP	Toxic Air Pollutant
TCA	Thermal Conductivity Analyzer
TCD	Thermal Conductivity Detector
TGNMOC	Total Gaseous Non-Methane Organic Compounds
TGOC	Total Gaseous Organic Compounds
THC	Total Hydrocarbon
TIC	Tentatively Identified Compound
TO	Thermal Oxidizer
TO	Toxic Organic (as in EPA Method TO-15)
TPH	Tons Per Hour
TRS	Total Reduced Sulfur
TTE	Temporary Total Enclosure
VE	Visible Emissions
VOC	Volatile Organic Compounds
WC	Inches Water Column
WDOE	Washington Department of Ecology
WWTP	Waste Water Treatment Plant

Nomenclature & Drift Correction Documentation

Nomenclature

Constants	Value	Units	Definition	Ref
Pstd(1)	29.92126	inHg	Standard Pressure	CRC
Pstd(2)	2116.22	lbf / ft²		CRC
Tstd	527.67	°R	Standard Temperature	CRC
R	1545.33	ft lbf / lbmol °R	Ideal Gas Constant	CRC
MW-atm	28.98456422	lbm / lbmole	Atmospheric (20.946 %O_2, 0.033% CO_2, Balance N_2+Ar)	
MW-C	12.011	lbm / lbmole	Carbon	CRC
MW-CO	28.0104	lbm / lbmole	Carbon Monoxide	CRC
MW-CO_2	44.0098	lbm / lbmole	Carbon Dioxide	CRC
MW-H_2O	18.01534	lbm / lbmole	Water	CRC
MW-NO_2	46.0055	lbm / lbmole	Nitrogen Dioxide	CRC
MW-O_2	31.9988	lbm / lbmole	Oxygen	CRC
MW-SO_2	64.0628	lbm / lbmole	Sulfur Dioxide	CRC
MW-N_2+Ar	28.16446807	lbm / lbmole (Balance with 98.82% N_2 & 1.18% Ar)	Emission balance	
C1	385.3211297	ft³ / lbmol	Ideal Gas Constant @ Standard Conditions	
C2	816.5455226	inHg in³/ °R ft³	Isokentics units correction constant	
Kp	5129.4	ft / min [(inHg lbm/mole) / (°R inH$_2$O)] ^½	Pitot tube constant	Ref 2.5.1

Symbol	Units	Definition	Calculating Equation or Source of Data	EPA
As	in²	Area, Stack		
An	in²	Area, Nozzle		
Bws	%	Moisture, % Stack gas	[100 Vw(std) / [Vw(std)+Vm(std)]]	Eq. 5-3
C	ppmv-C	Carbon (General Reporting Basis for Organics)		
C1	ft³/lbmol	Gas Constant @ Standard Conditions	[R Tstd / Pstd(2)]	
C2	inHg in³/ °R ft³		[14,400 Pstd / Tstd]	
Cd	lbm-GAS / MMdscf	Mass of gas per unit volume	[Cgas MWgas / C1]	
cg	gr/dscf	Grain Loading, Actual	[15.432 mn / Vm(std) 1,000]	Eq. 5-6
cg @ X%CO_2	gr/dscf	Grain Loading Corrected to X% Carbon Dioxide	[X% / CO_2%]	
cg @ X%O_2	gr/dscf	Grain Loading Corrected to X% Oxygen	[(20.946-X) / (20.946-O_2)]	
Cgas	ppmv, %	Gas Concentration, (Corrected)		
Cgas @ X%CO_2	ppmv	Gas Concentration Correction to X% Carbon Dioxide	[X% / CO_2%]	
Cgas @ X%O_2	ppmv	Gas Concentration Correction to X% Oxygen	[(20.946-X%) / (20.946-O_2%)]	
Cgas	ppmv		Mgas (lbm/hr) * 1,000,000*385.3211/60*Qsd*mw	
CO	ppmv	Carbon Monoxide		
Co	ft	Outer Circumference of Circular Stack		
Ci	ft	Inner Circumference of Circular Stack		
CO_2	%	Carbon Dioxide		
Cp		Pitot tube coefficient		
Ci	lb/hr	Particulate Mass Emissions	[60 cg Qsd/ 7,000]	
dH	in H_2O	Pressure differential across orifice		
Dn	in	Diameter, Nozzle		
dp^½		Average square root of velocity pressure		
Ds	in	Diameter, Stack		
E	lb / MMBtu	Pollutant Emission Rate	Cgas Fd MWgas (20.946 / (20.946-O_2)) / (1,000,000 C1)	
Fd	dscf / MMBtu	F Factor for Various Fuels		Table 19-1
I	%	Percent Isokinetic	[C2 Ts(abs) Vm(std) / (vs Ps mfg An Ø)]	Eq. 5-8*
Md	lbm / lbmole	Molecular weight, Dry Stack Gas	[(1-%O_2-%CO_2)(MWn2+ar)+(%O_2 MW-O_2)+(%CO_2 MW-CO_2)]	Eq. 3-1*
mfg		Mole fraction of dry stack gas	[1-Bws/100]	
Mgas	lbm/hr	Gaseous Mass Emisisons	[60 Cgas(ppmv) MW Pstd(2) Qsd / 1,000,000 R Tstd]	
mn	mg	Particulate lab sample weight		
Ms	lbm / lbmole	Molecular weight, Wet Stack	[Md mfg +MW-H_2O (1-mfg)]	Eq. 2-6
MW	lbm / lbmole	Molecular Weight		
NO_2	ppmv-NO_2	Nitrogen Dioxide (General Reporting Basis for NOx)		
NOx	ppmv-NO_2	Nitrogen Oxides (Reported as NO_2)		
O_2	%	Oxygen		
OPC	%	Opacity		
Pbar	in Hg	Pressure, Barometric		
Pg	in H_2O	Pressure, Static Stack		
Po	in Hg	Pressure, Absolute across Orifice	[Pbar + dH / 13.5951]	
Ps	in Hg	Pressure, Absolute Stack	[Pbar + Pg / 13.5951]	Eq. 2-6*
Qa	acf/min	Volumetric Flowrate, Actual	[As vs / 144]	
Qsd	dscf/min	Volumetric Flowrate, Dry Standard	[Qa Tstd mfg Ps] / [Pstd(1) Ts(abs)]	Eq 2-10*
Rf	MMBtu/hr		1,000,000 Mgas (20.946-O_2)] / [Cd Fd 20.946]	
SO_2	ppmv-SO_2	Sulfur Dioxide		
t	in	Wall thickness of a stack or duct		
TGOC	ppmv-C	Total Gaseous Organic Concentration (Reported as C)		
Tm	°F	Temperature, Dry gas meter		
Tm(abs)	°R	Temperature, Absolute Dry Meter	[Tm + 459.67]	
Ts	°F	Temperature, Stack gas		
Ts(abs)	°R	Temperature, Absolute Stack gas	[Ts + 459.67]	
Vlc	ml	Volume of condensed water		
Vm	dcf	Volume, Gas sample		
Vm(std)	dscf	Volume, Dry standard gas sample	[Y Vm Tstd Po]/ [Pstd(1) Tm(abs)]	Eq. 5-1
vs	fpm	Velocity, Stack gas	Kp Cp dp^½ [Ts(abs) / (Ps Ms)]^ ½	Eq. 2-9*
Vw(std)	scf	Volume, Water Vapor	0.04707 Vlc	Eq. 5-2
Y		Dry gas meter calibration factor		Fig. 5.8
Ø	min	Time, Total sample		

* Based on equation.

HORIZON ENGINEERING INC
13585 NE Whitaker Way • Portland, OR 97230
Phone (503) 255-5050 • Fax (503) 255-0505
www.horizonengineering.com

DRIFT CORRECTION DOCUMENTATION

EPA Drift Equations:

- Method 3A: Oxygen and Carbon Dioxide, Follow Section 12.0 of Method 7E
- Method 6C: Sulfur Dioxide, Follow Section 12.0 of Method 7E
- Method 7E: Nitrogen Oxides, Section 12.0

$$C_{gas} = \frac{C_{ma}(C - C_o)}{(C_m - C_o)} \qquad \text{(Eq. 7E-5b)}$$

- Method 10: Carbon Monoxide, Follow Section 12.0 of Method 7E
- Method 25A: Total Gaseous Organic Concentration (TGOC), this method does not mention correcting for drift although there are established limits.

Horizon Engineering Drift Correction Equations:

$$C_{gas} = \frac{(C_{id} - Z_x)(C_{ma} - C_{oa})}{(S_x - Z_x)} \qquad S_x = \frac{(C_{mf} - C_{mi})(T_x - T_{ci})}{(T_{cf} - T_{ci})} + C_{mi}$$

$$Z_x = \frac{(C_{of} - C_{oi})(T_x - T_{ci})}{(T_{cf} - T_{ci})} + C_{oi} \qquad T_x = \frac{(T_{te} - T_{ts})}{2} + T_{ts}$$

EPA	Definition	Horizon
C_{gas}	Effluent gas concentration, dry basis	C_{gas}
C_{ma}	Actual upscale calibration gas concentration	C_{ma}
C_{oa}	Actual zero/low calibration gas concentration	C_{oa}
C_m	Average of initial and final system upscale calibration bias responses	
	Initial system upscale calibration bias response	C_{mi}
	Final system upscale calibration bias response	C_{mf}
C_o	Average of initial and final system zero/low calibration bias responses	
	Initial system zero/low calibration bias response	C_{oi}
	Final system zero/low calibration bias response	C_{of}
C	Average gas concentration indicated by gas analyzer, dry basis	C_{id}
	Starting test time	T_{ts}
	Ending test time	T_{te}
	Initial system bias calibration response time	T_{ci}
	Final system bias calibration response time	T_{cf}
	Mid-point of test time or gas sampling interval to be analyzed	T_x
	Approximate upscale response at mid-point test time	S_x
	Approximate zero/low response at mid-point test time	Z_x
	Carbon count of TGOC calibration gas. (CH_4=1, C_3H_8=3...)	K
	Carbon response factor basis on a state basis (example Propane carbon basis)	R

Notes or exceptions:
TGOC is first recorded on a wet basis, then corrected to a dry basis
The TGOC instruments used by Horizon have some historic data on instrument response to different hydrocarbons.

06/02/10

Furnace No. 3: Total Chrome

Total Chrome and Flow Rate Results

Example Calculations

Field Data

Sample Recovery Field Data and Worksheets

Laboratory Results and COC

Traverse Point Locations

Tedlar Bag Field Data (See Furnace 4 Field Data Sheet)

EPA Method 29 Chrome Results - Total

Saint Gobain Furnace #3 Exhaust		TOTAL		8-Feb-11	PS 4212
Vm(std)	dscf	67.64	65.96	67.22	66.94
	dscm	1.915	1.868	1.904	1.90
Q(std)	dscf/min	16,704	16,368	16,577	16,549
Time	min	120	120	120	
Oxygen	%	20.00	19.90	19.80	19.90
RESULTS		Run 1	Run 2	Run 3	Average
Chromium	ug	**1,185**	**1,814**	**1,987**	**1,662**
CONCENTRATIONS		Run 1	Run 2	Run 3	Average
Chromium	ug/m3	**619**	**971**	**1,044**	**878**
MASS EMISSIONS		Run 1	Run 2	Run 3	Average
Chromium	lbm/hr	**0.0387**	**0.0595**	**0.0648**	**0.0544**
	lbm/ton	**0.00473**	**0.00728**	**0.00792**	**0.006645**

EPA Method 29 Chrome Results - Front Half

Saint Gobain					8-Feb-11
Furnace #3		**FRONT HALF**			PS
Exhaust					4212
Vm(std)	dscf	67.64	65.96	67.22	66.94
	dscm	1.915	1.868	1.904	1.90
Q(std)	dscf/min	16,704	16,368	16,577	16,549
Time	min	120	120	120	
Oxygen	%	20.00	19.90	19.80	19.90
RESULTS		Run 1	Run 2	Run 3	Average
Chromium	ug	**1,110**	**1,810**	**1,980**	**1,633**
CONCENTRATIONS		Run 1	Run 2	Run 3	
Chromium	ug/m3	**579.5**	**969.0**	**1,040.1**	**862.9**
MASS EMISSIONS		Run 1	Run 2	Run 3	
Chromium	lbm/hr	**0.0363**	**0.0594**	**0.0646**	**0.0534**
	lbm/ton	**0.00443**	**0.00726**	**0.00790**	**0.006531**

EPA Method 29 Chrome Results - Back Half

Saint Gobain					8-Feb-11
Furnace #3		BACK HALF			PS
Exhaust					4212
Vm(std)	dscf	67.64	65.96	67.22	66.94
	dscm	1.915	1.868	1.904	1.90
Q(std)	dscf/min	16,704	16,368	16,577	16,549
Time	min	120	120	120	
Oxygen	%	20.00	19.90	19.80	19.90
RESULTS		Run 1	Run 2	Run 3	Average
Chromium	ug	**75.400**	**3.900**	**6.700**	**28.667**
CONCENTRATIONS		Run 1	Run 2	Run 3	
Chromium	ug/m3	**39.367**	**2.088**	**3.520**	**14.992**
MASS EMISSIONS		Run 1	Run 2	Run 3	
Chromium	lbm/hr	**0.00246**	**0.00013**	**0.00022**	**0.00094**
	lbm/ton	**0.00030**	**0.000016**	**0.000027**	**0.00011**

Flow Rate and Moisture

Client	Saint Gobain	2/8/11	Date
Source	Furnace #3	PS	Operator
Location	Exhaust	4212	
	123429	mew	Analysist/QA

Definitions	Symbol	Units	Run 1	Run 2	Run 3	Average
Time, Starting			7:56	10:28	12:55	
Time, Ending			9:56	12:28	14:55	
Volume, Gas sample	Vm	dcf	64.405	63.739	64.928	64.36
Temperature, Dry gas meter	Tm	°F	57.60	65.19	65.02	62.60
Temperature, Stack gas	Ts	°F	389.25	377.29	388.79	385.11
Pressure differential across orifice	dH	in H2O	1.090	1.026	1.092	1.07
Average square root velocity pressure	dp^½	in H2O^½	0.522	0.494	0.518	
Diameter, Nozzle	Dn	in	0.2933	0.2915	0.2933	
Pitot tube coefficient	Cp		0.8207	*0.84*	0.8207	
Dry gas meter calibration factor	Y		1.01230	1.01230	1.01230	
Pressure, Barometric	Pbar	in Hg	30.35	30.35	30.35	
Pressure, Static Stack	Pg	in H2O	-0.23	-0.23	-0.23	
Time, Total sample	Ø	min	120	120	120	120
Stack Area	As	in²	1,886	1,886	1,886	
Nozzle Area	An	in²	0.0676	0.0667	0.0676	
Volume of condensed water	Vlc	ml	103.4	92.4	102.4	99.38
Oxygen		% O2	20.00	19.90	19.80	19.90
Carbon Dioxide		% CO2	3.30	3.60	3.60	3.50
Molecular weight, Dry Stack	Md	lbm / lbmole	29.45	29.49	29.49	29.47
Pressure, Absolute Stack	Ps	in Hg	30.33	30.33	30.33	30.33
Pressure, avg arcoss orifice	Po	in Hg	30.43	30.43	30.43	30.43
Volume, Dry standard gas sample	Vm(std)	dscf	67.64	65.96	67.22	66.94
Volume, Water Vapor	Vw(std)	scf	4.87	4.35	4.82	4.68
Moisture, % Stack (EPA 4)	Bws(1)	%	6.71	6.18	6.69	6.53
Moisture, % Stack (Psychrometry-Sat)	Bws(2)	%	na	na	na	
Moisture, % Stack (Theoretical)	Bws(3)	%	na	na	na	
Moisture, % Stack (Psychrometry)	Bws(4)	%	na	na	na	
Moisture, % Stack (Predicted)	Bws(5)	%	na	na	na	
Mole Fraction dry Gas	mfg		93.3%	93.8%	93.3%	93.5%
Molecular weight, Wet Stack	Ms	lbm / lbmole	28.68	28.78	28.72	28.73
Velocity, Stack gas	vs	fpm	2,170	2,084	2,152	2,135
Volumetric Flowrate, Actual	Qa	acf/min	28,415	27,297	28,177	27,963
Volumetric Flowrate, Dry Standard	Qsd	dscf/min	16,704	16,368	16,577	16,549
Percent Isokinetic	I	%	94.2	94.9	94.3	94.5

HORIZON ENGINEERING LLC
13585 NE Whitaker Way • Portland, OR 97230
Phone (503) 255-5050 • Fax (503) 255-0505
www.horizonengineering.com

Example Calculations
Metals Emissions

Client: Saint Gobain Source Furnace No. 3

Date 2/8/2011 Project # 4212 Run # 2

Metals Emissions – Mass Rate

Metal Cr measured 1,814 µg

Sample Volume 65.96 dscf Flow Rate 16,368 dscf/min

Equation:

$$lb-Cr/hr = \frac{measured\mu g * mg/1000\mu g}{SampleVolume} * FlowRate * \frac{60\,\min}{hr} * \frac{lb}{453592.37mg}$$

Calculation:

$$\frac{1,814\ \mu g * mg/1000\mu g}{65.96\ dscf} * \frac{16,368\ dscf}{\min} * \frac{60\,\min}{hr} * \frac{lb}{453592.37mg} = 0.0595\ lb\text{-}Cr/hr$$

Sample Calculations, Chromium Concentration

Client: Saint Gobain Source Furnace No. 3

Date 2/8/2011 Project # 4212 Run # 2 Page 2

CHROMIUM CONCENTRATION. mg/dscm $\frac{1.814\,mg}{65.96\,dscf} \times \frac{1g}{1000mg} \times \frac{15.432gr}{g} = 0.000424 \frac{gr}{dscf}$

Measured Results, gr/dscf 0.000424

Equation: $CR, mg/dscm = Cr, gr/dscf \times \frac{lb}{7000gr} \times \frac{453{,}592mg}{lb} \times \frac{35.315cubicft}{cubicMeter}$

Calculation: $0.000424\, Cr, gr/dscf \times \frac{lb}{7000gr} \times \frac{453{,}592mg}{lb} \times \frac{35.315cubicft}{cubicMeter}$

$= 0.971\, Cr, mg/dscm$

$= \boxed{971 \frac{\mu g\text{-}Cr}{dscm}}$

Sample Calculations, Additional Concentrations & Rates

Client: Saint Gobain Source Furnace No 3
Date 2/8/2011 Project # 4212 Run # 2

Chromium Emissions Production Based: lb/ton glass production:

Measured Cr Results, lb/hr 0.0595

Glass Production (Pull Rate), tons/day 196.3

Equation: $$\frac{lbCr}{tonGlass} = \left(\frac{lbCr}{hr}\right) \times \left(\frac{day}{tonsGlass}\right) \times \left(\frac{24hr}{day}\right)$$

Calculation: $$\left(\frac{0.0595\,lbCr}{hr}\right) \times \left(\frac{day}{196.3\,tonsGlass}\right) \times \left(\frac{24hr}{day}\right) = \frac{0.0073\,lbCr}{tonGlass}$$

ED_000719_00032165-00031

Client: Saint Gobain Date 2/8/2011

Source Furnace No. 3 Project # 4212 Run # 2

Molecular Weights (lb/lbmol):

CO_2=44.01	O_2=31.999	N_2+Ar=28.154	H_2O=18.015	atm=28.965

Constants:

Pstd(1)=29.92129 in Hg	Tstd=527.67 °R	Kp=5129.4	C2=816.5455inHg in^2/°R ft^2

Pressure, Absolute Stack (Ps):

$$Ps, inHg = P_{Barometric} + \frac{P_{static}}{13.6} = \underline{30.35}\,inHg + \frac{\underline{-0.23}\,in\ H2O}{13.6} = \underline{30.33}\,inHg$$

Volume, Dry Standard Gas Sample (Vm[std]): $Tm = \underline{65.2}\circ F + 459.7 = \underline{524.9}\circ R$

$$Orifice\ Pr\ ess = Pb\ \underline{30.35}\,inHg + \frac{\underline{1.026}\,\Delta H}{13.6} = \underline{30.43}\,inHg$$

$$Vm(std)\,ft^3 = \frac{Y \times MeterVol \times Tstd \times Orifice\ Pr\ es(Po)}{Pstd(1) \times Tm \circ R}$$

$$= \frac{\underline{1.0123} \times \underline{63.739}\,ft^3 \times 527.67 \circ R \times (Po\ \underline{30.43}\,inHg)}{29.9213 inHg \times \underline{524.9} \circ R} = \underline{65.96}\,dscf$$

Moisture, % Stack Gas (bws): $V_{wstd} = 0.04707 \times Cond.H2O, ml = 0.04707 \times \underline{92.4}\,ml = \underline{4.35}\,scf$

$$bws = 100 \times \frac{V_{wstd}}{V_{wstd} + V_{mstd}} = \frac{\underline{4.35}\,scf}{\underline{4.35}\,scf + \underline{65.96}\,dscf} = \underline{6.19}\,\%$$

Mole Fraction Gas (mfg): $1 - \frac{bws}{100} = 1 - \frac{\underline{6.19}\,\%}{100} = \underline{0.9381}$

Molecular Weight, Dry, Stack (Md):

$$Md\,\frac{lb}{lbmol} = \left[(1 - \frac{O_2}{100} - \frac{CO_2}{100}) \times MolWtN2.Ar\right] + \left[\frac{O_2}{100} \times MolWtO2\right] + \left[\frac{CO_2}{100} \times MolWtCO2\right]$$

$$= \left[(1 - \frac{\underline{19.9}\,\%O_2}{100} - \frac{\underline{3.6}\,\%CO_2}{100}) \times 28.154\,\frac{lb}{lbmol}\right] + \left[\frac{\underline{19.9}\,\%O_2}{100} \times 31.999\,\frac{lb}{lbmol}\right] + \left[\frac{\underline{3.6}\,\%CO_2}{100} \times 44.010\,\frac{lb}{lbmol}\right]$$

$$= \underline{29.49}\,\frac{lb}{lbmol}$$

Client: Saint Gobain Date 2/8/2011

Molecular Weight, Wet, Stack (Ms):

$$Ms\frac{lb}{lbmol} = (Md \times mfg) + (MolWtH_2O \times (1 - mfg)) = \left(29.49\frac{lb}{lbmol} \times 0.9381\right) + (18.015 \times (1 - .9381))$$

$$= 28.78\frac{lb}{lbmol}$$

Stack gas (vs): $Ts = 377.3 \circ F + 459.7 = 837 \circ R$

$$= vs\frac{feet}{\min} = Kp \times Cp \times dp\sqrt{inH_2O} \times \sqrt{\frac{Ts \circ R}{Ps \times Ms}}$$

$$= 5129.4\, ft/\min \ldots \times 0.84 \times 0.494\, dp\sqrt{inH_2O} \times \sqrt{\frac{837 \circ R}{30.33\, inHg \times 28.78\frac{lb}{lbmol}}} = 2{,}084.3\frac{ft}{\min}$$

Flow Rate, Actual (Qa):

$$Qa\frac{actualCubicFeet}{\min} = \frac{AreaStack \times vs}{144} = \frac{1{,}885.7\, in^2 \times 2{,}084.3\frac{ft}{\min}}{144} = 27{,}294\, acfm$$

Flow Rate, Dry Standard (Qsd):

$$Qsd\frac{dryStdFt^3}{\min} = \frac{Qa \times Tstd \times mfg \times Ps}{Pstd(1) \times Ts \circ R} = \frac{27{,}294\, acfm \times 527.67 \circ R \times 0.9381 \times 30.33\, inHg}{29.9213 inHg \times 837 \circ R}$$

$$= 16{,}362\frac{dscf}{\min}$$

Field Data Sheet

HORIZON ENGINEERING INC
13585 NE Whitaker Way
Portland, OR 97230
Phone (503) 255-5050
Fax (503) 255-0505

0.2935
0.2935
0.2930

Client: Saint Gobain
Plant: Seattle, WA
Location: Furnace 3
Sample Location: Outlet

Date 2-4-2011
Test Method 29 for chrome
Concurrent Testing Yes, F4
Run # 1
Operator MSL Support PS
Temperature, Ambient (Ta) 48
Moisture 11% Tdb Twb
Press., Static (Pstat) -0.23 Press., Bar (Pb) 30.35
Cyclonic Flow Expected ? N If yes, avg. null angle ____ degrees

Stack Diagram
ALT-011
Std TC (ID/°F) ____
Stack TC (ID/°F) ____
Continuity Check ↑ or ↓

Probe 5-5 (g / s) Cp 0.8207 Heat Set 250 °F
Post-Test Pitot Inspection NL (NC=no change, D=damaged)
Pitot Lk Rate in H2O@in H2O — Pre: Hi 0 @4 Lo 0 @4 Post: Hi 0 @4 Lo 0 @4
Nozzle 0.2933 Oven 188 Imp. Outlet I-9
Filter 10.0TM29-0416 Heat Set 254 °F
Meter Box 19 dH@ 1.8117 Y 1.0123
Meter Leak Check — Pretest: 0.005 cfm 18 inHg; Post: 0.007 cfm 15" inHg

Traverse Point Number	Sampling Time min (dt)	Clock Time (24 hr)	Dry Gas Meter Reading cuft (Vm)	Velocity Head in H2) (dPs)	Orifice Pressure in H2O DESIRED	Orifice Pressure H2O ACTUAL (dH)	STACK °F (Ts) Amb:	PROBE °F (Tp) Amb:	OVEN Filter °F (Tol) Amb:	IMPINGER Outlet °F (Ti) Amb:	METER Inlet/Avg. °F (Tm-in) Amb:	METER Outlet °F (Tm-out) Amb:	Pump Vacuum inHg (Pv)
		0756	344.951										
1	5		347.647	0.26	0.93	0.98	386	251	249	41	50	50	2
2	10		—	0.28	1.06	1.1	389	252	248	42	49	56	2
3	15		353.256	0.31	1.17	1.2	389	250	250	43	50	56	2
4	20		356.478	0.38	1.44	1.45	390	250	248	45	57	50	2
5	25		359.847	0.46	1.74	1.7	390	248	246	46	59	51	2
6	30		363.484	0.53	2.00	2.00	392	251	257	47	60	52	4
7	35		366.841	0.41	1.55	1.55	393	250	255	48	61	52	4
8	40		369.792	0.31	1.17	1.2	393	251	253	48	61	53	3
9	45		372.143	0.21	0.79	0.79	394	249	250	48	61	54	2
10	50		374.269	0.17	0.64	0.64	393	250	256	48	61	55	2
11	55		375.958	0.11	0.42	0.42	388	250	253	46	61	54	2
12	60		377.440	0.08	0.30	0.30	361	249	255	45	59	55	2
13	65		380.113	0.28	1.06	1.06	389	252	554	45	58	54	3
14	70		382.800	0.28	1.06	1.06	391	251	253	44	52	56	3
15	75		385.633	0.30	1.13	1.13	392	254	252	44	56	62	3
16	80		388.571	0.32	1.21	1.2	393	248	250	45	58	64	3
17	85		391.978	0.46	1.74	1.7	393	247	255	46	58	66	4
18	90		395.730	0.54	2.04	2.0	392	251	254	48	59	67	5
19	95		399.028	0.40	1.51	1.5	391	251	259	48	59	66	4
20	100		401.742	0.28	1.06	1.05	393	250	256	49	59	65	3
21	105		404.288	0.22	0.83	0.83	391	249	252	48	58	60	2
22	110		406.200	0.14	0.53	0.53	388	262	251	49	55	64	2
23	115		407.804	0.10	0.378	0.38	384	249	254	49	58	62	2
24	120	0956	409.356	0.10	0.378	0.38	388	253	254	51	58	61	2
25													30

Notes:

Field Data Sheet

HORIZON ENGINEERING
13585 NE Whitaker Way
Portland, OR 97230
Phone (503) 255-5050
Fax (503) 255-0505

0.2920
0.2910
0.2915

Client: Saint Gobain
Plant: Seattle, WA
Location: Furnace 3
Sample Location: outlet

Date 2/8/2011
Test Method 29 for Crome
Concurrent Testing Pb, F4
Run # 2
Operator MSL Support PS
Temperature, Ambient (Ta) 58
Moisture 1% Tdb Twb
Press., Static (Pstat) -.23 Press., Bar (Pb) 30.35
Cyclonic Flow Expected ? N If yes, avg. null angle ____ degrees

Stack Diagram
ALT-011
Std TC (ID/°F) ____
Stack TC (ID/°F) ____
Continuity Check ↑ or ↓

Probe PS-54 (g/s) Cp 0.84 Heat Set 250 °F
Post-Test Pitot Inspection NL (NC=no change, D=damaged)
Pitot Lk Rate in H2O@in H2O Pre: Hi 0 @ 4 Post 0 @ 4
Lo 0 @ 4 0 @ 4
Nozzle 0.2915 Oven ~~254~~ Imp. Outlet 1-12
Filter M-M29-015 Heat Set 254 °F
Meter Box 19 dH@ ~~1.48~~ 1.8117 Y 1.0123
Meter Leak Check Pretest: 0.002 cfm 15 inHg
Post: 0.003 cfm 15 inHg

Traverse Point Number	Sampling Time min (dt)	Clock Time (24 hr)	Dry Gas Meter Reading cuft (Vm)	Velocity Head in H2) (dPs)	Orifice Pressure in H2O DESIRED	Orifice Pressure H2O ACTUAL (dH)	STACK °F (Ts) Amb:	PROBE °F (Tp) Amb:	OVEN Filter °F (To) Amb:	IMPINGER Outlet °F (Ti) Amb:	METER Inlet/Avg. °F (Tm-in) Amb:	METER Outlet °F (Tm-out) Amb:	Pump Vacuum inHg (Pv)
		1028	409.696										
1 12	5		~~414~~ 412.132	0.21	0.83	0.83	388	250	248	~~54~~ 53	59	62	2
2 11	10		414.564	0.21	0.83	0.83	392	251	246	51	59	60	2
3 10	15		416.996	0.26	1.03	1.03	393	250	254	52	67	61	2
4 9	20		419.684	0.34	1.34	1.34	391	242	258	51	68	62	3
5 8	25		422.679	0.42	1.65	1.65	390	253	254	50	69	62	4
6 7	30		426.078	0.48	1.89	1.9	388	249	254	51	70	63	5
7 6	35		429.744	0.34	1.34	1.34	387	253	254	51	68	62	4
8 5	40		432.773	0.25	0.985	0.99	389	254	256	51	68	62	3
9 4	45		435.444	0.16	0.63	0.63	375	251	254	52	69	62	2
10 3	50		437.540	0.14	0.55	0.55	355	252	254	54	68	63	2
11 2	55		439.586	0.09	0.35	0.35	350	251	254	54	68	63	2
12 1	60		441.565	0.09	0.35	0.35	350	253	254	54	68	63	2
13 12	65		444.211	0.24	0.95	0.95	368	250	254	56	68	63	2
14 11	70		446.772	0.24	0.95	0.95	384	254	250	53	69	63	2
15 10	75		449.481	0.26	1.03	1.03	386	251	254	50	70	64	3
16 9	80		452.500	0.34	1.34	1.34	387	253	254	52	69	64	4
17 8	85		455.876	0.42	1.65	1.65	389	252	254	49	70	64	5
18 7	90		459.560	0.50	1.97	1.97	388	276	254	50	69	64	6
19 6	95		463.472	0.47	1.85	1.84	389	248	~~55~~ 52	53	70	64	6
20 5	100		466.098	0.28	1.10	1.10	387	252	254	52	69	63	5
21 4	105		468.464	0.20	0.79	0.79	378	247	255	54	68	63	3
22 3	110		470.320	0.13	0.51	0.51	354	252	254	54	67	63	3
23 2	115		471.936	0.09	0.35	0.35	351	250	254	54	66	63	3
24 1	120	1228	473.435	0.09	0.35	0.35	347	253	256	53	67	63	3
25													

Notes:

31

Field Data Sheet

HORIZON ENGINEERING
13585 NE Whitaker Way
Portland, OR 97230
Phone (503) 255-5050
Fax (503) 255-0505

Client: Saint-Gobain
Plant: Scott 14, WA
Location: Furnace 3
Sample Location: Outlet

Date 2/8/2011
Test Method 29
Concurrent Testing Yes, F3
Run # 3
Operator MSL Support DS
Temperature, Ambient (Ta) 63
Moisture 1%/0 Tdb Twb
Press., Static (Pstat) -0.23 Press., Bar (Pb) 30.35
Cyclonic Flow Expected ? N If yes, avg. null angle ____ degrees

Stack Diagram
ALT-011
Std TC (ID/°F) ____
Stack TC (ID/°F) ____
Continuity Check ↑ or ↓

Probe 5-5 (g/s) Cp 0.8207 Heat Set 250 °F
Post-Test Pitot Inspection (NC=no change, D=damaged)
Pitot Lk Rate in H2O@in H2O Pre: Hi 0 @ 4 Lo 0 @ 4 Post 0 @ 4 0 @ 4
Nozzle 0.2933 Oven 188 Imp. Outlet 7-9
Filter 10-M29-021 Heat Set 254 °F
Meter Box 19 dH@ 1.8117 Y 1.0123
Meter Leak Check Pretest: 0.004 cfm 18 inHg Post: 0.006 cfm 15 inHg

Traverse Point Number	Sampling Time min (dt)	Clock Time (24 hr)	Dry Gas Meter Reading cuft (Vm)	Velocity Head in H2) (dPs)	Orifice Pressure in H2O DESIRED	Orifice Pressure H2O ACTUAL (dH)	STACK °F (Ts) Amb:	PROBE °F (Tp) Amb:	OVEN Filter °F (To) Amb:	IMPINGER Outlet °F (Ti) Amb:	METER Inlet/Avg. °F (Tm-in) Amb:	METER Outlet °F (Tm-out) Amb:	Pump Vacuum inHg (Pv)
		1255	474.045										
1 12	5		476.807	0.27	1.04	1.04	385	249	253	52	61	59	1
2 11	10		479.478	0.27	1.04	1.04	385	256	250	45	63	61	1
3 10	15		482.421	0.31	1.195	1.2	386	245	248	47	67	62	1
4 9	20		485.497	0.36	1.39	1.4	385	251	251	49	68	61	2
5 8	25		488.726	0.40	1.54	1.5	389	248	252	49	70	63	2
6 7	30		492.427	0.53	2.04	2.0	388	252	256	49	69	63	3
7 6	35		495.678	0.40	1.54	1.5	389	253	257	50	69	63	2
8 5	40		498.371	0.27	1.04	1.0	391	251	254	50	69	62	2
9 4	45		500.853	0.23	0.89	0.89	389	248	254	50	69	63	2
10 3	50		502.817	0.14	0.54	0.54	387	250	254	50	68	63	2
11 2	55		504.703	0.13	0.50	0.50	383	247	251	53	68	64	2
12 1	60		506.560	0.10	0.39	0.39	380	249	255	54	69	63	2
13 12	65		509.219	0.26	1.00	1.00	389	245	250	55	69	64	2
14 11	70		511.863	0.26	1.00	1.00	389	248	250	56	70	64	2
15 10	75		514.743	0.30	1.16	1.25	390	250	254	55	69	63	2
16 9	80		517.604	0.31	1.195	1.20	391	251	252	54	69	63	2
17 8	85		520.997	0.43	1.66	1.7	390	251	254	55	68	63	4
18 7	90		524.722	0.52	2.00	2.0	394	246	251	55	68	63	4
19 6	95		528.294	0.43	1.66	1.7	396	248	254	56	69	63	4
20 5	100		531.213	0.30	1.16	1.2	395	250	255	50	68	63	3
21 4	105		533.782	0.23	0.89	0.89	395	248	250	49	68	63	3
22 3	110		535.727	0.14	0.54	0.54	390	253	253	47	67	62	2
23 2	115		537.361	0.10	0.39	0.39	386	251	256	47	64	61	2
24 1	120	1455	538.973	0.10	0.39	0.39	389	252	256	47	63	60	2
25													

Notes:

EPA Method 29 Sample Recovery Worksheet

Client	Saint Gobain		
Source	Furnace #3	8-Feb-11	Date
Location	Exhaust	msl,ps	Operator
	M5/M29 (Metals)	4121	Job #
		MEW	Analyst

Definitions		Symbol	Units	Run 1						Run 2						Run 3					
Impinger Contents				2	3	4	5A	5B	5C	2	3	4	5A	5B	5C	2	3	4	5A	5B	5C
		Rinse #2	g																		
		Impinger, Contents,Condensate & Rinse#1	g		124.00	472.00					122.00	463.00					123.00	473.00			
spg		Impinger, Contents & Condensate	g		28.00	377.00					28.00	369.00					28.00	379.00			
g/ml		Impinger	g		28.00	75.00					28.00	76.00					28.00	76.00			
	1.0590	10% H2O2 / 5% HNO3	ml			200.00	0.00	0.00	0.00			200.00	0.00	0.00	0.00			200.00	0.00	0.00	0.00
	1.1515	4% KMnO4 / 10% H2SO4	ml			0.00	0.00	0.00	0.00			0.00	0.00	0.00	0.00			0.00	0.00	0.00	0.00
	1.0016	0.1 N HNO3	ml			0.00	0.00	0.00	0.00			0.00	0.00	0.00	0.00			0.00	0.00	0.00	0.00
	0.9982	H2O	ml			0.00	0.00	0.00	0.00			0.00	0.00	0.00	0.00			0.00	0.00	0.00	0.00
	1.0878	8N HCL / H2O	ml			0.00	0.00	0.00	0.00			0.00	0.00	0.00	0.00			0.00	0.00	0.00	0.00
		Condensate	g			90.20	0.00	0.00	0.00			81.20	0.00	0.00	0.00			91.20	0.00	0.00	0.00
		Rinse	g		96.00	100.00	0.00	0.00	0.00		94.00	100.00	0.00	0.00	0.00		95.00	100.00	0.00	0.00	0.00
		Acetone	gm	0.00						0.00						0.00					
			ml	0.00						0.00						0.00					
		0.1 N HNO3	gm		96.00	95.00	0.00				94.00	94.00	0.00				95.00	94.00	0.00		
			ml		95.84	94.85	0.00				93.85	93.85	0.00				94.85	93.85	0.00		
Rinse + Initial		10% KMnO4	gm					0.00						0.00						0.00	
			ml					0.00						0.00						0.00	
		10% H2O2 / 5% HNO3	gm																		
			ml			200.00						200.00						200.00			
		8N HCL / H2O	gm						0.00						0.00						0.00
			ml						0.00						0.00						0.00
Silica Gel Impinger		Final weight	g			633.00						631.00						631.00			
		Initial weight	g			620.00						620.00						620.00			
		Gain	g			13.00						11.00						11.00			
Total Moisture Gain		Condensate + Silica Gel gain	g			103.20						92.20						102.20			
Vlc		Net Moisture Gain	ml			103.38						92.36						102.38			

HORIZON ENGINEERING LLC
13585 NE Whitaker Way • Portland, OR 97230
Phone (503) 255-5050 • Fax (503) 255-0505
www.horizonengineering.com

Sample Recovery Worksheet – EPA Method 29 Multi-Metals

Client: Saint Gobain Source: Furnace #3

Run No.: 1 Test Date: 20110208

Container No.	Tare	Imp. Cont.	#1 Rinse	#2 Rinse	Start	End
			grams			
#1 Filter 10-OTM29-46						
#2 Imp. Acetone						
#3 Probe Rinse, HNO_3	28		124			
#4 HNO_3 or HNO_3/H_2O_2	75	377	472			
#5A, 0.1 N HNO_3						
# 5B $KMNO_4/H_2SO_4/H_2O$						
#5C 8N HCl / H_2O						
#6 Silica Gel	620	633				

Run No.: 2 Test Date: 20110208

Container No.	Tare	Imp. Cont.	#1 Rinse	#2 Rinse	Start	End
			grams			
#1 Filter						
#2 Imp. Acetone						
#3 Probe Rinse, HNO_3	28		122			
#4 HNO_3 or HNO_3/H_2O_2	76	369	463			
#5A, 0.1 N HNO_3						
# 5B $KMNO_4/H_2SO_4/H_2O$						
#5C 8N HCl / H_2O						
#6 Silica Gel	620	631				

Run No.: 3 Test Date: 20110208

Container No.	Tare	Imp. Cont.	#1 Rinse	#2 Rinse	Start	End
			grams			
#1 Filter						
#2 Imp. Acetone						
#3 Probe Rinse, HNO_3	28		123			
#4 HNO_3 or HNO_3/H_2O_2	76	379	473			
#5A, 0.1 N HNO_3						
# 5B $KMNO_4/H_2SO_4/H_2O$						
#5C 8N HCl / H_2O						
#6 Silica Gel	620	631				

Columbia Analytical Services™

1317 S. 13th Avenue, Kelso, WA 98626 (360) 577-7222 • (800) 695-7222 www.caslab.com

March 7, 2011 Analytical Report for Service Request No: K1101149

Margery Heffernan
Horizon Engineering, LLC
13585 NE Whitaker Way
Portland, OR 97230

RE: Saint Gobain/4212

Dear Margery:

Enclosed are the results of the samples submitted to our laboratory on February 10, 2011. For your reference, these analyses have been assigned our service request number K1101149.

Analyses were performed according to our laboratory's NELAP-approved quality assurance program. The test results meet requirements of the current NELAP standards, where applicable, and except as noted in the laboratory case narrative provided. For a specific list of NELAP-accredited analytes, refer to the certifications section at www.caslab.com. All results are intended to be considered in their entirety, and Columbia Analytical Services, Inc. (CAS) is not responsible for use of less than the complete report. Results apply only to the items submitted to the laboratory for analysis and individual items (samples) analyzed, as listed in the report.

Please call if you have any questions. My extension is 3291. You may also contact me via Email at EWallace@caslab.com.

Respectfully submitted,

Columbia Analytical Services, Inc.

Ed Wallace

Ed Wallace
Project Chemist

EW/dlm

Acronyms

ASTM	American Society for Testing and Materials
A2LA	American Association for Laboratory Accreditation
CARB	California Air Resources Board
CAS Number	Chemical Abstract Service registry Number
CFC	Chlorofluorocarbon
CFU	Colony-Forming Unit
DEC	Department of Environmental Conservation
DEQ	Department of Environmental Quality
DHS	Department of Health Services
DOE	Department of Ecology
DOH	Department of Health
EPA	U. S. Environmental Protection Agency
ELAP	Environmental Laboratory Accreditation Program
GC	Gas Chromatography
GC/MS	Gas Chromatography/Mass Spectrometry
LUFT	Leaking Underground Fuel Tank
M	Modified
MCL	Maximum Contaminant Level is the highest permissible concentration of a substance allowed in drinking water as established by the USEPA.
MDL	Method Detection Limit
MPN	Most Probable Number
MRL	Method Reporting Limit
NA	Not Applicable
NC	Not Calculated
NCASI	National Council of the Paper Industry for Air and Stream Improvement
ND	Not Detected
NIOSH	National Institute for Occupational Safety and Health
PQL	Practical Quantitation Limit
RCRA	Resource Conservation and Recovery Act
SIM	Selected Ion Monitoring
TPH	Total Petroleum Hydrocarbons
tr	Trace level is the concentration of an analyte that is less than the PQL but greater than or equal to the MDL.

Inorganic Data Qualifiers

*	The result is an outlier. See case narrative.
#	The control limit criteria is not applicable. See case narrative.
B	The analyte was found in the associated method blank at a level that is significant relative to the sample result as defined by the DOD or NELAC standards.
E	The result is an estimate amount because the value exceeded the instrument calibration range.
J	The result is an estimated value that was detected outside the quantitation range.
U	The analyte was analyzed for, but was not detected ("Non-detect") at or above the MRL/MDL. *DOD-QSM 4.1 definition*: Analyte was not detected and is reported as less than the LOD or as defined by the project. The detection limit is adjusted for dilution.
i	The MRL/MDL or LOQ/LOD is elevated due to a matrix interference.
X	See case narrative.
Q	See case narrative. One or more quality control criteria was outside the limits.
H	In accordance with the 2007 EPA Methods Update Rule published in the Federal Register, the holding time for this test is immediately following sample collection. The samples were analyzed as soon as possible after receipt by the laboratory.

Metals Data Qualifiers

#	The control limit criteria is not applicable. See case narrative.
J	The result is an estimated value that was detected outside the quantitation range.
E	The percent difference for the serial dilution was greater than 10%, indicating a possible matrix interference in the sample.
M	The duplicate injection precision was not met.
N	The Matrix Spike sample recovery is not within control limits. See case narrative.
S	The reported value was determined by the Method of Standard Additions (MSA).
U	The analyte was analyzed for, but was not detected ("Non-detect") at or above the MRL/MDL. *DOD-QSM 4.1 definition*: Analyte was not detected and is reported as less than the LOD or as defined by the project. The detection limit is adjusted for dilution.
W	The post-digestion spike for furnace AA analysis is out of control limits, while sample absorbance is less than 50% of spike absorbance.
i	The MRL/MDL or LOQ/LOD is elevated due to a matrix interference.
X	See case narrative.
+	The correlation coefficient for the MSA is less than 0.995.
Q	See case narrative. One or more quality control criteria was outside the limits.

Organic Data Qualifiers

*	The result is an outlier. See case narrative.
#	The control limit criteria is not applicable. See case narrative.
A	A tentatively identified compound, a suspected aldol-condensation product.
B	The analyte was found in the associated method blank at a level that is significant relative to the sample result as defined by the DOD or NELAC standards.
C	The analyte was qualitatively confirmed using GC/MS techniques, pattern recognition, or by comparing to historical data.
D	The reported result is from a dilution.
E	The result is an estimate amount because the value exceeded the instrument calibration range.
J	The result is an estimated value that was detected outside the quantitation range.
N	The result is presumptive. The analyte was tentatively identified, but a confirmation analysis was not performed.
P	The GC or HPLC confirmation criteria was exceeded. The relative percent difference is greater than 40% between the two analytical results.
U	The analyte was analyzed for, but was not detected ("Non-detect") at or above the MRL/MDL. *DOD-QSM 4.1 definition*: Analyte was not detected and is reported as less than the LOD or as defined by the project. The detection limit is adjusted for dilution.
i	The MRL/MDL or LOQ/LOD is elevated due to a chromatographic interference.
X	See case narrative.
Q	See case narrative. One or more quality control criteria was outside the limits.

Additional Petroleum Hydrocarbon Specific Qualifiers

F	The chromatographic fingerprint of the sample matches the elution pattern of the calibration standard.
L	The chromatographic fingerprint of the sample resembles a petroleum product, but the elution pattern indicates the presence of a greater amount of lighter molecular weight constituents than the calibration standard.
H	The chromatographic fingerprint of the sample resembles a petroleum product, but the elution pattern indicates the presence of a greater amount of heavier molecular weight constituents than the calibration standard.
O	The chromatographic fingerprint of the sample resembles an oil, but does not match the calibration standard.
Y	The chromatographic fingerprint of the sample resembles a petroleum product eluting in approximately the correct carbon range, but the elution pattern does not match the calibration standard.
Z	The chromatographic fingerprint does not resemble a petroleum product.

Columbia Analytical Services, Inc.
Kelso, WA
State Certifications, Accreditations, and Licenses

Program	Number
Alaska DEC UST	UST-040
Arizona DHS	AZ0339
Arkansas - DEQ	88-0637
California DHS	2286
Florida DOH	E87412
Hawaii DOH	-
Idaho DHW	-
Indiana DOH	C-WA-01
Louisiana DEQ	3016
Louisiana DHH	LA050010
Maine DHS	WA0035
Michigan DEQ	9949
Minnesota DOH	053-999-368
Montana DPHHS	CERT0047
Nevada DEP	WA35
New Jersey DEP	WA005
New Mexico ED	-
North Carolina DWQ	605
Oklahoma DEQ	9801
Oregon - DHS	WA200001
South Carolina DHEC	61002
Washington DOE	C1203
Wisconsin DNR	998386840
Wyoming (EPA Region 8)	-

COLUMBIA ANALYTICAL SERVICES, INC.

Client:	Horizon Engineering, LLC	Service Request No.:	K1101149
Project:	Saint Gobain	Date Received:	2/10/11
Sample Matrix:	Water and Filter		

CASE NARRATIVE

All analyses were performed consistent with the quality assurance program of Columbia Analytical Services, Inc. (CAS). This report contains analytical results for samples designated for Tier II data deliverables. When appropriate to the method, method blank results have been reported with each analytical test. Additional quality control analyses reported herein include: Laboratory Duplicate (DUP), Matrix Spike (MS), and Laboratory Control Sample (LCS).

Sample Receipt

Eight water and four filter samples were received for analysis at Columbia Analytical Services on 2/10/11. The samples were received in good condition and consistent with the accompanying chain of custody form. The samples were stored at room temperature upon receipt at the laboratory.

Total Metals

Matrix Spike Recovery Exceptions:
The control criteria for matrix spike recovery of Chromium for sample Cont. 4 were not applicable. The analyte concentration in the sample was significantly higher than the added spike concentration, preventing accurate evaluation of the spike recovery.

Laboratory Control Sample Exceptions:
The upper control criterion was exceeded for Chromium in the "Front Half" Laboratory Control Sample (LCS) (119% recovery versus an upper control limit of 115%). Since the entire Front Half sample is consumed in the initial digestion reanalysis was not possible. No further corrective action was appropriate.

Approved by EMW Date 3/8/11

39

Columbia Analytical Services™

CHAIN OF CUSTODY

1317 South 13th Ave. • Kelso, WA 98626 • (360) 577-7222 • (800) 695-7222x07 • FAX (360) 636-1068

SR#: K1101149

PAGE 1 OF 2 COC # 40

PROJECT NAME: Saint Gobain
PROJECT NUMBER: 4212
PROJECT MANAGER: Preston Skaggs
COMPANY/ADDRESS: 13585 NE Whitaker Way
CITY/STATE/ZIP: Portland, OR 97230
E-MAIL ADDRESS:
PHONE #: 503-255-5050 FAX #: 503-255-0505
SAMPLER'S SIGNATURE:

SAMPLE I.D.	DATE	TIME	LAB I.D.	MATRIX	NUMBER OF CONTAINERS	Semivolatile Organics by GC/MS 625 [ ] 8270 [ ] 8270LL [ ]	Volatile Organics 624 [ ] 8260 [ ] 8021 [ ] BTEX [ ]	Hydrocarbons (*see below) Gas [ ] Diesel [ ] Oil [ ] [ ] Fuel Fingerprint (FIO) [ ] NW-HCID Screen	Oil & Grease/TRPH 1664 HEM [ ] 1664 SGT [ ]	PCB's Aroclors [ ] Congeners [ ]	Pesticides/Herbicides 608 [ ] 8081A [ ] 8141A [ ] 8151A [ ]	Chlorophenolics - 8151M Tri [ ] Tetra [ ] PCP [ ]	PAHS 8310 [ ] SIM [ ]	Metals, Total or Dissolved (See list below)	Cyanide [ ]	Hex-Chrom [ ]	pH, Cond, Cl, SO_4, PO_4, F, NO_2, NO_3, BOD, TSS, TDS (circle)	NH_3-N, COD, Total-P, TKN, TOC, DOC (circle) NO_2+NO_3	TOX 9020 [ ] AOX 1650 [ ] 506 [ ]					REMARKS
GMF#3 Imp. R1	2/8			Aq	1									X											
R2					1									X											
R3					1									X											
GMF#3 F½ R1					1									X											
R2					1									X											
R3					1									X											
0.1N HNO_3 Blank					1									X											
5%/10% Blank	✓			✓	1									X											

REPORT REQUIREMENTS

___ I. Routine Report: Method Blank, Surrogate, as required
X II. Report Dup., MS, MSD as required
___ III. Data Validation Report (includes all raw data)
___ IV. CLP Deliverable Report
___ V. EDD

INVOICE INFORMATION

P.O. # 4212
Bill To: Emily Bagwell

TURNAROUND REQUIREMENTS

___ 24 hr. ___ 48 hr.
___ 5 Day
X Standard (10-15 working days)
___ Provide FAX Results

Requested Report Date

Circle which metals are to be analyzed:

Total Metals: Al As Sb Ba Be B Ca Cd Co Cr Cu Fe Pb Mg Mn Mo Ni K Ag Na Se Sr Tl Sn V Zn Hg

Dissolved Metals: Al As Sb Ba Be B Ca Cd Co Cr Cu Fe Pb Mg Mn Mo Ni K Ag Na Se Sr Tl Sn V Zn Hg

*INDICATE STATE HYDROCARBON PROCEDURE: AK CA WI NORTHWEST OTHER:_____ (CIRCLE ONE)

SPECIAL INSTRUCTIONS/COMMENTS:

RELINQUISHED BY:	RECEIVED BY:	RELINQUISHED BY:	RECEIVED BY:
Signature: [signature]	Signature: [signature]	Signature: [signature]	Signature: [signature]
Date/Time: 2/10/11 1119	Date/Time: 2/10/11 1120	Date/Time: 2/10/11	Date/Time: 2/10/11 1245
Printed Name: Thomas Rhodes	Printed Name: [signature]	Printed Name: [signature]	Printed Name: SHOKINS
Firm: HE	Firm: [illegible]	Firm: [illegible]	Firm: CAS

RCOC #1 07/09

ED_000719_00032165-00044

9

Columbia Analytical Services™

CHAIN OF CUSTODY

SR#: K1101149

1317 South 13th Ave. • Kelso, WA 98626 • (360) 577-7222 • (800) 695-7222x07 • FAX (360) 636-1068

PAGE 2 OF 2 COC # 41

PROJECT NAME: Saint Gobain
PROJECT NUMBER: 4212
PROJECT MANAGER: Preston Skaggs
COMPANY/ADDRESS: 13555 NE Whitaker Way
CITY/STATE/ZIP: Portland, OR 97230
E-MAIL ADDRESS:
PHONE #: 503-255-5050 FAX #: 503-255-0505
SAMPLER'S SIGNATURE:

SAMPLE I.D.	DATE	TIME	LAB I.D.	MATRIX	NUMBER OF CONTAINERS	Semivolatile Organics by GC/MS 625 ☐ 8270 ☐ 8270L ☐	Volatile Organics 624 ☐ 8260 ☐ 8021 ☐ BTEX ☐	Hydrocarbons (*see below) Gas ☐ Diesel ☐ Oil ☐	Fuel Fingerprint (FIQ) NW-HCID Screen	Oil & Grease/TRPH 1664 HEM ☐ 1664 SGT ☐	PCB's Aroclors ☐ Congeners ☐	Pesticides/Herbicides 608 ☐ 8081A ☐ 8141A ☐ 8151A ☐	Chlorophenolics - 8151M Tri ☐ Tetra ☐ PCP ☐	PAHS 8310 ☐ SIM ☐	Metals, Total or Dissolved (See list below)	Cyanide ☐ Hex-Chrom ☐	pH, Cond., Cl, SO_4, PO_4, F, NO_2, NO_3, BOD, TSS, TDS (circle)	NH_3-N, COD, Total-P, TKN, TOC, DOC (circle) NO_2+NO_3	TOX 9020 ☐ AOX 1650 ☐ 506 ☐					REMARKS
SmF#3 Filter #1	2/8			Sol.	1										X									
R2					1										X									
R3					1										X									
Filter Blanks x3					1										X									

REPORT REQUIREMENTS
___ I. Routine Report: Method Blank, Surrogate, as required
X II. Report Dup., MS, MSD as required
___ III. Data Validation Report (includes all raw data)
___ IV. CLP Deliverable Report
___ V. EDD

INVOICE INFORMATION
P.O. # 4212
Bill To: Emily Bagwell

TURNAROUND REQUIREMENTS
___ 24 hr. ___ 48 hr.
___ 5 Day
X Standard (10-15 working days)
___ Provide FAX Results
Requested Report Date

Circle which metals are to be analyzed:
Total Metals: Al As Sb Ba Be B Ca Cd Co Cr Cu Fe Pb Mg Mn Mo Ni K Ag Na Se Sr Tl Sn V Zn Hg
Dissolved Metals: Al As Sb Ba Be B Ca Cd Co Cr Cu Fe Pb Mg Mn Mo Ni K Ag Na Se Sr Tl Sn V Zn Hg

*INDICATE STATE HYDROCARBON PROCEDURE: AK CA WI NORTHWEST OTHER:_____ (CIRCLE ONE)

SPECIAL INSTRUCTIONS/COMMENTS:

RELINQUISHED BY:	RECEIVED BY:	RELINQUISHED BY:	RECEIVED BY:
Signature: [signature]	Signature: [signature]	Signature: [signature]	Signature: [signature]
Date/Time: 2/10/11 1117	Date/Time: 2/10/11 1120	Date/Time: 2/10/11	Date/Time: 2/10/11 1245
Printed Name: Thomas Blades	Printed Name: [illegible]	Printed Name: [illegible]	Printed Name: S. HADKINS
Firm: HE	Firm: CAS	Firm: CAS	Firm: CAS

ED_000719_00032165-00045

Columbia Analytical Services, Inc.
Cooler Receipt and Preservation Form

PC EA

Client / Project: Horizon Service Request K11 01149

Received: 2/10/11 Opened: 2/10/11 By: SJ Unloaded: 2/10/11 By: SJ

1. Samples were received via? *Mail* *Fed Ex* *UPS* *DHL* *PDX* (*Courier*) *Hand Delivered*
2. Samples were received in: (circle) *Cooler* (*Box*) *Envelope* *Other* _____ *NA*
3. Were custody seals on coolers? (NA) Y N If yes, how many and where? _____

   If present, were custody seals intact? Y N If present, were they signed and dated? Y N

Cooler Temp °C	Temp Blank °C	Thermometer ID	Cooler/COC ID. (NA)	Tracking Number (NA)	Filed
NM					

7. Packing material used. *Inserts* *Baggies* *Bubble Wrap* *Gel Packs* *Wet Ice* *Sleeves* *Other* Styrofoam
8. Were custody papers properly filled out (ink, signed, etc.)? NA (Y) N
9. Did all bottles arrive in good condition (unbroken)? *Indicate in the table below.* NA (Y) N
10. Were all sample labels complete (i.e analysis, preservation, etc.)? NA (Y) N
11. Did all sample labels and tags agree with custody papers? *Indicate major discrepancies in the table on page 2.* NA (Y) N
12. Were appropriate bottles/containers and volumes received for the tests indicated? NA (Y) N
13. Were the pH-preserved bottles (*see SMO GEN SOP*) received at the appropriate pH? *Indicate in the table below* (NA) Y N
14. Were VOA vials received without headspace? *Indicate in the table below.* (NA) Y N
15. Was C12/Res negative? (NA) Y N

Sample ID on Bottle	Sample ID on COC	Identified by:

Sample ID	Bottle Count Bottle Type	Out of Temp	Head-space	Broke	pH	Reagent	Volume added	Reagent Lot Number	Initials	Time

Notes, Discrepancies, & Resolutions: _____

42

Page 1 *of* _____

COLUMBIA ANALYTICAL SERVICES, INC.

Analytical Report

Client: Horizon Engineering, LLC
Project: Saint Gobain/4212
Sample Matrix: Misc.

Service Request: K1101149
Date Collected: 02/08/11
Date Received: 02/10/11
Date Extracted: 02/24-26/11

Total Metals
Units: Micrograms (µg)
(Field Blank Corrected)

		Front Half Run - 1 (Analytical Fraction 1A)		**Back Half Run - 1** (Analytical Fraction 2A)		**Total Front Half + Back Half**
Sample Name:		**Cont. 1 & 3**		**Cont. 4**		
Lab Code:		K1101149-001,-002		K1101149-003		
Date Analyzed:		02/28/11		02/28/11		
Analyte	**EPA Method**	**Front Half MRL**		**Back Half MRL**		**Total MRL**	
Chromium	29/200.8	1.0	1110	0.1	75.4	1.1	1190

COLUMBIA ANALYTICAL SERVICES, INC.

Analytical Report

Client:	Horizon Engineering, LLC	**Service Request:**	K1101149
Project:	Saint Gobain/4212	**Date Collected:**	02/08/11
Sample Matrix:	Misc.	**Date Received:**	02/10/11
		Date Extracted:	02/24-26/11

Total Metals
Units: Micrograms (µg)
(Field Blank Corrected)

			Front Half Run - 2 (Analytical Fraction 1A)		**Back Half Run - 2** (Analytical Fraction 2A)		**Total Front Half + Back Half**
	Sample Name:		**Cont. 1 & 3**		**Cont. 4**		
	Lab Code:		K1101149-004,-005		K1101149-006		
	Date Analyzed:		02/28/11		02/28/11		
Analyte	**EPA Method**	**Front Half MRL**		**Back Half MRL**		**Total MRL**	
Chromium	29/200.8	1.0	1810	0.1	3.9	1.1	1810

COLUMBIA ANALYTICAL SERVICES, INC.

Analytical Report

Client: Horizon Engineering, LLC
Project: Saint Gobain/4212
Sample Matrix: Misc.

Service Request: K1101149
Date Collected: 02/08/11
Date Received: 02/10/11
Date Extracted: 02/24-26/11

Total Metals
Units: Micrograms (µg)
(Field Blank Corrected)

		Front Half Run - 3 (Analytical Fraction 1A)		Back Half Run - 3 (Analytical Fraction 2A)		Total Front Half + Back Half
Sample Name:		Cont. 1 & 3		Cont. 4		
Lab Code:		K1101149-007,-008		K1101149-009		
Date Analyzed:		02/28/11		02/28/11		
Analyte	**EPA Method**	**Front Half MRL**		**Back Half MRL**	**Total MRL**	
Chromium	29/200.8	1.0	1980	0.1	6.7	1.1	1990

COLUMBIA ANALYTICAL SERVICES, INC.

Analytical Report

Client:	Horizon Engineering, LLC	**Service Request:**	K1101149
Project:	Saint Gobain/4212	**Date Collected:**	02/08/11
Sample Matrix:	Misc.	**Date Received:**	02/10/11
		Date Extracted:	02/24-26/11

Total Metals
Units: Micrograms (µg)

		Front Half Blank (Analytical Fraction 1A)		**Back Half Blank** (Analytical Fraction 2A)	
Sample Name:					
Lab Code:		K1101149-010,-011		K1101149-011,-012	
Date Analyzed:		02/28/11		02/28/11	
Analyte	**EPA Method**	**Front Half MRL**	**#**	**Back Half MRL**	
Chromium	29/200.8	1.0	1.2	0.1	0.3

COLUMBIA ANALYTICAL SERVICES, INC.

Analytical Report

Client:	Horizon Engineering, LLC	**Service Request:**	K1101149
Project:	Saint Gobain/4212	**Date Collected:**	NA
Sample Matrix:	Misc.	**Date Received:**	NA
		Date Extracted:	02/24-26/11

Total Metals
Units: Micrograms (µg)

Sample Name:			**Method Blank - Front Half**		**Method Blank - Back Half**
Lab Code:			K1101149-MBF		K1101149-MBB
Date Analyzed:			02/28/11		02/28/11
Analyte	**EPA Method**	**Front Half MRL**		**Back Half MRL**	
Chromium	29/200.8	1.0	ND	0.1	ND

COLUMBIA ANALYTICAL SERVICES, INC.

QA/QC Report

Client:	Horizon Engineering, LLC	**Service Request:**	K1101149
Project:	Saint Gobain/4212	**Date Collected:**	02/08/11
Sample Matrix:	Misc.	**Date Received:**	02/10/11
		Date Extracted:	02/26/11
		Date Analyzed:	02/28/11

Duplicate Summary
Total Metals
Units: Micrograms (µg)
(Field Blank Corrected)

Sample Name: Cont. 4
Lab Code: K1101149-003D

Analyte	EPA Method	MRL	Sample Result	Duplicate Sample Result	Average	Relative Percent Difference
Chromium	29/200.8	0.1	75.4	75.5	75.5	<1

COLUMBIA ANALYTICAL SERVICES, INC.

QA/QC Report

Client: Horizon Engineering, LLC
Project: Saint Gobain/4212
Sample Matrix: Misc.

Service Request: K1101149
Date Collected: 02/08/11
Date Received: 02/10/11
Date Extracted: 02/26/11
Date Analyzed: 02/28/11

Matrix Spike Summary
Total Metals
Units: Micrograms (µg)
(Field Blank Corrected)

Sample Name: Cont. 4
Lab Code: K1101149-003S

Analyte	MRL	Spike Level	Sample Result	Spiked Sample Result	Percent Recovery	CAS Percent Recovery Acceptance Limits
Chromium	0.1	7.7	75.4	83.7	NA	70-130

COLUMBIA ANALYTICAL SERVICES, INC.

QA/QC Report

Client:	Horizon Engineering, LLC	**Service Request:**	K1101149
Project:	Saint Gobain/4212	**Date Collected:**	NA
LCS Matrix:	Water	**Date Received:**	NA
		Date Analyzed:	02/28/11

Laboratory Control Sample Summary (Front Half)
Total Metals
Units: µg/L (ppb)

Source: CAS Spike Solution

Analyte	EPA Method	True Value	Result	Percent Recovery	CAS Percent Recovery Acceptance Limits
Chromium	29/200.8	100	119(X)	119	85-115

COLUMBIA ANALYTICAL SERVICES, INC.

QA/QC Report

Client:	Horizon Engineering, LLC	**Service Request:**	K1101149
Project:	Saint Gobain/4212	**Date Collected:**	NA
LCS Matrix:	Water	**Date Received:**	NA
		Date Analyzed:	02/28/11

Laboratory Control Sample Summary (Back Half)
Total Metals
Units: µg/L (ppb)

Source: CAS Spike Solution

Analyte	EPA Method	True Value	Result	Percent Recovery	CAS Percent Recovery Acceptance Limits
Chromium	29/200.8	20	20.7	104	85-115

Traverse Point Locations

Saint Gobain
Furnace #3
Exhaust
EPA 1

8-Feb-11
PS
4212
mew

Outer Circumference	Co	in	
Wall thickness	t	in	
INSIDE of FAR WALL to OUTSIDE of Nipple	F	in	52.00
INSIDE of NEAR WALL to OUTSIDE of Nipple	N	in	3
STACK WALL to to OUTSIDE of Nipple	N-t	in	
DOWNstream Disturb	A	in	120.0
UPstream Disturb	B	in	240.0
Inner Diameter	Ds	in	49
Area	As	sqin	1885.7
DOWNstream Ratio	A/Ds		2.45
UPstream Ratio	B/Ds		4.90
Minimum #Pts (Particulate)			24
Minimum #Pts/Diameter			12
Minimum #Pts (NON-Particulate)			16
Minimum #Pts/Diameter			8
Actual Points per Diameter			12
Actual Points Used			24

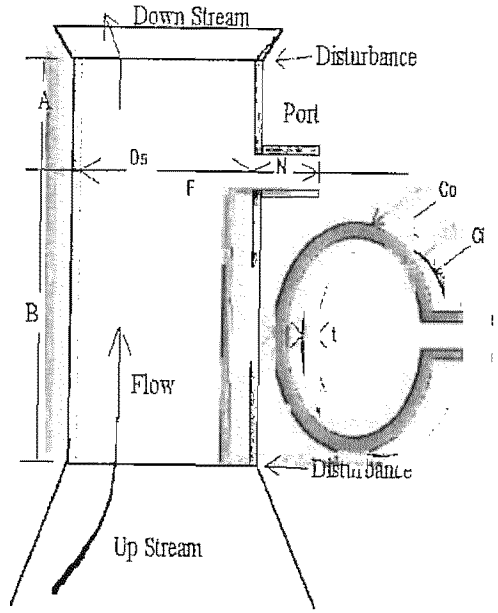

Trav Pt #No	Fract Stk ID (f)	Stack ID (Ds)	Actual Points (Dsxf)	Nearest 8ths (TP)	Adjusted Points (TP)	Traverse Points (TP + N)	Traverse Points (TP + N)
1	2.13%	49.0	1.0	1	1	4	4
2	6.70%	49.0	3.3	3.25	3.25	6.25	6 1 / 4
3	11.81%	49.0	5.8	5.75	5.75	8.75	8 3 / 4
4	17.73%	49.0	8.7	8.625	8.625	11.625	11 5 / 8
5	25.00%	49.0	12.3	12.25	12.25	15.25	15 1 / 4
6	35.57%	49.0	17.4	17.375	17.375	20.375	20 3 / 8
7	64.43%	49.0	31.6	31.625	31.625	34.625	34 5 / 8
8	75.00%	49.0	36.8	36.75	36.75	39.75	39 3 / 4
9	82.27%	49.0	40.3	40.375	40.375	43.375	43 3 / 8
10	88.19%	49.0	43.2	43.25	43.25	46.25	46 1 / 4
11	93.30%	49.0	45.7	45.75	45.75	48.75	48 3 / 4
12	97.87%	49.0	48.0	48	48	51	51

Furnace No. 4: SO_2 and NO_x

Results and Example Calculations

O_2 & CO_2 for Molecular Weight Determinations

Analyzer Calibration Field Data and QA Checks

Data Logger Gas Charts & Printouts

3-Point Stratification Check

Gaseous Emissions

Saint Gobain
Furnace #4
Exhaust
Nitrogen Oxides (NOx) Sulfur Dioxide (SO2) Emissions

Feb. 08 2011
PS
4212

Number of Completed Runs			Run 2	Run 3	Run 4	Average
System Calibration Time - Initial		Tci	10:12	11:57	13:43	
Test Time-Starting		Tts	10:19	12:17	13:47	
Test Time-Ending		Tte	11:20	13:19	14:48	
System Calibration Time - Final		Tcf	11:57	13:43	15:05	
Test Mid-point Time		Tx	10:50	12:48	14:17	
Volumetric Flowrate, Dry Standard	dscf/min	Qsd	17,057	15,417	15,805	
Oxygen	%	O2	16.60	16.56	16.74	
Carbon Dioxide	%	CO2	3.75	3.71	3.57	
Nitrogen Oxides	NOx	Range	1000	1000	1000	
Indicated average-Dry	ppmv	Cid	360.37	358.85	337.79	352.33
Cylinder Value - High Range calibration gas	ppmv	Cma	527.40	527.40	527.40	
Cylinder Value - Low Range (Zero) calibration gas	ppmv	Coa	0.00	0.00	0.00	
System Calibration Response - High Range gas - Initial	ppmv	Cmi	500.67	493.64	490.95	
System Calibration Response - Low Range gas - Initial	ppmv	Coi	0.09	0.41	0.99	
System Calibration Response - Low Range gas - Final	ppmv	Cof	0.41	0.99	0.65	
System Calibration Response - High Range gas - Final	ppmv	Cmf	493.64	490.95	489.00	
Actual average - Dry (Corrected for Drift)	ppmv-NO2	Cgas	381.48	384.20	361.60	375.76
Mass Emissions	lbm-NO2 / hr	Mgas	46.61	42.43	40.94	43.33
Production Based Rate	lbm-NO2 / ton		8.86	8.07	7.79	8.24
Glass Production	ton-glass / hr		5.26	5.26	5.26	5.26
Sulfur Dioxide	SO2	Range	50	50	50	
Indicated average-Dry	ppmv	Cid	32.24	29.50	30.71	30.82
Cylinder Value - High Range calibration gas	ppmv	Cma	25.70	25.70	25.70	
Cylinder Value - Low Range (Zero) calibration gas	ppmv	Coa	0.00	0.00	0.00	
System Calibration Response - High Range gas - Initial	ppmv	Cmi	25.75	26.02	25.62	
System Calibration Response - Low Range gas - Initial	ppmv	Coi	1.49	1.11	0.94	
System Calibration Response - Low Range gas - Final	ppmv	Cof	1.76	0.94	1.35	
System Calibration Response - High Range gas - Final	ppmv	Cmf	27.14	25.62	26.28	
Actual average - Dry (Corrected for Drift)	ppmv-SO2	Cgas	31.94	29.51	30.12	30.52
Mass Emissions	lbm-SO2 / hr	Mgas	5.4351	4.5383	4.7491	4.91
Production Based Rate	lbm-SO2 / ton		1.03	0.86	0.90	0.93
Glass Production	ton-glass / hr		5.26	5.26	5.26	5.26

Client: Saint Gobain Source Furnace No. 4
Date 2/8/2011 Project # 4212 Run # 2 Page 1

GASEOUS EMISSION RATE, LB/HR

Equation:

$$E\frac{lb}{hr} = \frac{60\frac{\min}{hr} \times GasMeasured(ppmv) \times GasMolWt\frac{lb}{lbmol} \times 2116.22\frac{lbf}{ft^2} \times Flow\frac{dscf}{\min}}{10^6 \times 1545.33\frac{ftlbf}{lbmol \circ R} \times 527.7 \circ Rstd}$$

=

where Molecular Weights (lb/lbmol):

CO=28	SO_2=64
NO_x=46	TGOC as C=12

Calculation:

$FlowRate =$ 15,417 $\frac{dscf}{\min}$

$GasName$ NOx $MeasuredConcentration =$ 384 $ppmv$

$$E\frac{lb}{hr} = \frac{60\frac{\min}{hr} \times 384\ ppmv \times 46\ \frac{lb}{lbmol} \times 2116.22\frac{lbf}{ft^2} \times 15{,}417\frac{dscf}{\min}}{10^6 \times 1545.33\frac{ftlbf}{lbmol \circ R} \times 527.7 \circ Rstd}$$

= 42.4 lbm-NOx/hr

Sample Calculations, Additional Concentrations and Rates - Gases

Client: Saint Gobain Source Furnace No. 4
Date 2/8/2011 Project # 4212 Run # 2 Page 2

Gaseous Emissions Production Based: lb/ton-glass

Gas Name: NOx Measured Results, lb/hr 42.4

Production Rate, ton-glass/hr 5.26

Equation: $lb/ton = lb/hr \div ton/hr$

Calculation: 42.4 $lb/hr \div$ 5.26 $ton/hr =$ 8.06 lb/ton

Molecular Weight

Saint Gobain
Furnace #4
Exhaust
O2 & CO2-EPA 3A

Feb. 08 2011
PS
4212
mew

Number of Completed Runs			Run 2	Run 3	Run 4	Average
System Calibration Time - Initial		Tci	10:12:28	11:57:07	13:43:47	
Test Time-Starting		Tts	10:19:41	12:17:07	13:47:00	
Test Time-Ending		Tte	11:20:48	13:19:44	14:48:00	
System Calibration Time - Final		Tcf	11:57:07	13:43:47	15:05:00	
Test Mid-point Time		Tx	10:50	12:48	14:17	
Molecular weight, Dry Stack	lbm/lb-mole	Md	29.39	29.38	29.36	
Oxygen	O2	Range				
Indicated average - Dry	%	Cid	16.40	16.36	16.54	16.43
Cylinder Value - High Range calibration gas	%	Cma	12.02	12.02	12.02	
Cylinder Value - Low Range (Zero) calibration gas	%	Coa	0.00	0.00	0.00	
System Calibration Response - High Range gas - Initial	%	Cmi	11.85	11.92	11.81	
System Calibration Response - Low Range gas - Initial	%	Coi	-0.02	0.01	-0.06	
System Calibration Response - Low Range gas - Final	%	Cof	0.01	-0.06	-0.07	
System Calibration Response - High Range gas - Final	%	Cmf	11.92	11.81	11.80	
Actual average - Dry (Corrected for Drift)	%	Cgas	16.60	16.56	16.74	16.63
Carbon Dioxide	CO2	Range				
Indicated average - Dry	%	Cid	3.75	3.72	3.58	3.68
Cylinder Value - High Range calibration gas	%	Cma	12.05	12.05	12.05	
Cylinder Value - Low Range (Zero) calibration gas	%	Coa	0.00	0.00	0.00	
System Calibration Response - High Range gas - Initial	%	Cmi	11.97	11.98	12.00	
System Calibration Response - Low Range gas - Initial	%	Coi	0.00	0.10	-0.03	
System Calibration Response - Low Range gas - Final	%	Cof	0.10	-0.03	-0.07	
System Calibration Response - High Range gas - Final	%	Cmf	11.98	12.00	12.00	
Actual average - Dry (Corrected for Drift)	%	Cgas	3.75	3.71	3.57	3.67

HORIZON ENGINEERING INC
13585 NE Whitaker Way • Portland, OR 97230
Phone (503) 255-5050 • Fax (503) 255-0505
www.horizonengineering.com

Calibration Field Record

Client: Saint Gobain
Test Date: 2011 02 08
Source: #4 Furnace

Tester(s): PS, KRK, MB
Observer:
Datalogger: Test Point
Conditioner:

Leak Checks: Pre-OK ✓ Post-OK ✓ Probe placement Centroid	Cylinder #	Gas	Cylinder Value (Cv)	Analyzer Calibration Response (Cdir)	Resp. Time (secs)	Start Run 1 / Start Run 2 / Start Run 3 System Calibration Response (Cs)	End Run 1 / Start Run 2 / Start Run 3 System Calibration Response (Cs)	End Run 2 / Start Run 3 System Calibration Response (Cs)	End Run 3 System Calibration Response (Cs)	Run 4
Times				7:42		8:15	10:10	11:45	13:35	15:05
O2% ch 1	R-mix20	O2	22.22	22.26	30					
Range/CS 0-25,	R-mix26	O2	12.02	11.90	↓	11.80	11.85	11.92	11.81	11.80
Analyzer Model Servo 1400	R-mix29	N2	0.0	0.02	✓	0.01	-0.02	0.01	-0.06	-0.07
Analyzer SN: HE 013										
CO2 % ch 2	R-mix20	CO2	21.23	21.24	30					
Range/CS 0-25,	R-mix26	CO2	12.05	11.99	↓	11.93	11.97	11.98	12.00	12.00
Analyzer Model Servo 1440	R-mix29	N2	0.0	0.03	✓	-0.03	0.00	0.10	-0.03	-0.07
Analyzer SN: HE 166										
CO ppm ch___		CO								
Range/CS /		CO								
Analyzer Model		N2								
Analyzer SN:										
NOx ppm ch 4	R-mix28	NO	968	968	45					
Range/CS 0-1000,	R-mix30	NO	527	521	↓	516	501	494	491	489
Analyzer Model TE 42i	R-mix26	N2	0.0	0.45	✓	.045	0.09	0.41	0.99	0.65
Analyzer SN: 299	R-mix29		24.5				25.82	25.51		
~~TGOC ppm~~ ch___				48.32						
Range SO2 RECal				25.56				26.02	25.62	26.28
Analyzer Model				-0.08				1.11	0.94	1.35
Analyzer SN:		Air								
SO2 ch 7	R-mix31	SO2	48.5	48.5	75					
Range/CS 0-50,	R-mix29	SO2	25.7	25.55	↓	25.3	25.75	27.14		
Analyzer Model WR 721-M	R-mix26	N2	0.0	0.12	✓	0.60	1.49	1.76		
Analyzer SN: 295										

Performance Specs: (3A, 6C, 7E, 10, 20) Note: CS=High Gas Conc.			Performance Specs: (25A)	
Cal Error*	2%	(Cdir-Cv) / CS	5%	(Cs-Cv) / Cv
Bias* (SB)	5%	(Cs-Cdir) / CS	5%	(Cs-Cv) / Range
Drift*	3%	|SBf-SBi|	3%	(Csi-Csf) / Range

*Alternate specification: 0.5 ppmv absolute difference

Test Times	Run 1	Run 2	Run 3	
Start Time	8:33	10:19	12:17	13:47
End Time	9:34	11:20	13:19	14:48

Test Notes:
Strat ✓
Performed 1st 15 min of Run 1 & 2
Run 1 discarded because bias line melted.

Furnace #3

Bags	O_2	CO_2
Run 1	20.0	3.3
Run 2	19.9	3.6
Run 3	19.8	3.6

Hot Line Temp 247
Hot Line Temp

Saint Gobain Containers Furnace No. 4 2/8/2011		Cylinder ID	Range	Cylinder Value Cv	Analyzer Calibration Response Cdir	Initial System Calibration Response Csi	Final System Calibration Response Csf	Cylinder Value Percent of Span	Analyzer Calibration Error < 2%	Initial System Bias < 5%	Final System Bias < 5%	Drift < 3%
OXYGEN												
Run 1	High Concentration	R-Mix20-AmT	25	22.22	22.26			100%	0.2%			
	Mid-Conc. High	R-Mix26-AmT	25	12.02	11.9	11.8	11.85	54%	0.5%	-0.5%	-0.2%	0.2%
	Zero	R-Mix29-AmT	25	0.0	0.02	0.01	-0.02	0%	0.1%	0.0%	-0.2%	0.1%
Run 2			25		22.26							
			25		11.9	11.85	11.92			-0.2%	0.1%	0.3%
			25		0.02	-0.02	0.01			-0.2%	0.0%	0.1%
Run 3			25		22.26							
			25		11.9	11.92	11.81			0.1%	-0.4%	0.5%
			25		0.02	0.01	-0.06			0.0%	-0.4%	0.3%
Run 4			25		22.26							
			25		11.9	11.81	11.8			-0.4%	-0.5%	0.0%
			25		0.02	-0.06	-0.07			-0.4%	-0.4%	0.0%
CARBON DIOXIDE												
Run 1	High Concentration	R-Mix20-AmT	25	21.23	21.24			100%	0.0%			
	Mid-Conc. High	R-Mix26-AmT	25	12.05	11.99	11.93	11.97	57%	0.3%	-0.3%	-0.1%	0.2%
	Zero	R-Mix29-AmT	25	0.0	0.03	-0.03	0	0%	0.1%	-0.3%	-0.1%	0.1%
Run 2			25		21.24							
			25		11.99	11.97	11.98			-0.1%	0.0%	0.0%
			25		0.03	0	0.1			-0.1%	0.3%	0.5%
Run 3			25		21.24							
			25		11.99	11.98	12			0.0%	0.0%	0.1%
			25		0.03	0.1	-0.03			0.3%	-0.3%	0.6%
Run 4			25		21.24							
			25		11.99	12	12			0.0%	0.0%	0.0%
			25		0.03	-0.03	-0.07			-0.3%	-0.5%	0.2%
NITROGEN OXIDES												
Run 1	High Concentration	R-Mix28-AmT	1,000	968	968			100%	0.0%			
	Mid-Conc. High	R-Mix30-AmT	1,000	527	521	516	501	54%	0.6%	-0.5%	-2.1%	1.5%
	Mid-Conc. Low	R-Mix26-AmT	1,000	24.5	5.09			3%	2.0%			
	Zero	R-Mix29-AmT	1,000	0.0	0.45	0.45	0.09	0%	0.0%	0.0%	0.0%	0.0%
Run 2			1,000		968							
			1,000		521	501	494			-2.1%	-2.8%	0.7%
			1,000		5.09	25.92	25.51			2.2%	2.1%	0.0%
			1,000		0.45	0.09	0.41			0.0%	0.0%	0.0%
Run 3			1,000		968	0						
			1,000		521	494	491			-2.8%	-3.1%	0.3%
			1,000		5.09							
			1,000		0.45	0.41	0.99			0.0%	0.1%	0.1%
Run 4			1,000		968							
			1,000		521	491	489			-3.1%	-3.3%	0.2%
			1,000		5.09							
			1,000		0.45	0.99	0.65			0.1%	0.0%	0.0%
SULFUR DIOXIDE												
Run 1	High Concentration	R-Mix31-AmT	50	48.5	48.5			100%	0.0%			
	Mid-Conc. High	R-Mix29-AmT	50	25.7	25.55	25.3	25.75	53%	0.3%	-0.5%	0.4%	0.9%
	Zero	R-Mix26-AmT	50	0.0	0.12	0.6	1.49	0%	0.2%	1.0%	2.6%	1.6%
Run 2			50		48.5							
			50		25.55	25.75	27.14			0.4%	3.3%	2.9%
			50		0.12	1.49	1.76			2.8%	3.4%	0.6%
Run 3			50	RE-CAL:	48.32				0.4%			
			50		25.56	26.02	25.62		0.3%	0.9%	0.1%	0.8%
			50		-0.08	1.11	0.94		0.2%	2.5%	2.1%	0.4%
Run 4			50		48.32							
			50		25.56	25.62	27.14			0.1%	3.3%	3.1%
			50		-0.08	0.94	1.76			2.1%	3.6%	1.7%

Part 60, Appendix A, Method 7E, Section 12.0 and Section 9.0 Summary Table of QA/QC; Method 25A

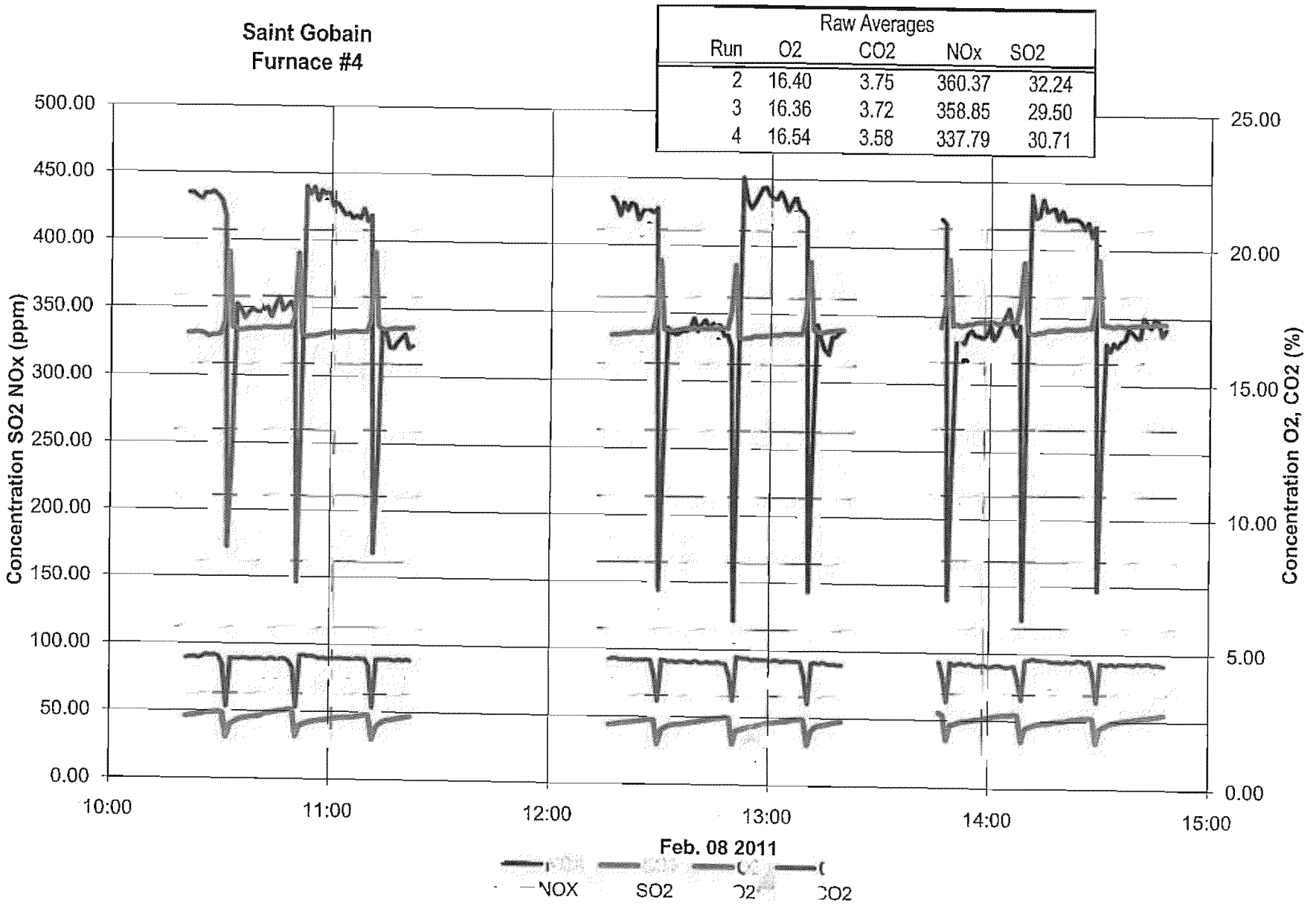
Saint Gobain
Furnace #4
Raw Averages
Run O2 CO2 NOx SO2
2 16.40 3.75 360.37 32.24
3 16.36 3.72 358.85 29.50
4 16.54 3.58 337.79 30.71
Concentration SO2 NOx (ppm)
500.00
450.00
400.00
350.00
300.00
250.00
200.00
150.00
100.00
50.00
0.00
Concentration O2, CO2 (%)
25.00
20.00
15.00
10.00
5.00
0.00
10:00
11:00
12:00
13:00
14:00
15:00
Feb. 08 2011
NOX
SO2
O2
CO2

Datalogger Printout - Furnace No. 4

Saint Gobain
Furnace #4

Exhaust

Raw Averages				
Run	O2	CO2	NOx	SO2
1	18.37	2.14	193.83	17.41
2	16.40	3.75	360.37	32.24
3	16.36	3.72	358.85	29.50
4	16.54	3.58	337.79	30.71

Date						
Started Test:	1	8:33:00	**O2**	**CO2**	**NOx**	**SO2**
Feb. 08 2011		8:33:29	16.604	3.577	323.534	28.123
Feb. 08 2011		8:34:29	17.853	2.546	230.024	21.406
Feb. 08 2011		8:35:29	18.086	2.366	202.314	18.641
Feb. 08 2011		8:36:29	18.208	2.266	191.138	17.764
Feb. 08 2011		8:37:29	18.437	2.089	180.018	16.644
Feb. 08 2011		8:38:29	18.775	1.788	154.652	14.319
Feb. 08 2011		8:39:29	18.592	1.949	161.108	15.092
Feb. 08 2011		8:40:29	18.41	2.096	176.65	16.489
Feb. 08 2011		8:41:29	18.403	2.103	184.29	17.312
Feb. 08 2011		8:42:29	18.404	2.114	182.749	17.213
Feb. 08 2011		8:43:29	18.388	2.119	183.716	17.748
Feb. 08 2011		8:44:29	18.381	2.124	184.065	18.054
Feb. 08 2011		8:45:29	18.378	2.136	185.604	18.192
Feb. 08 2011		8:46:29	18.372	2.143	178.057	18.536
Feb. 08 2011		8:47:29	18.344	2.147	183.797	18.988
Feb. 08 2011		8:48:29	18.385	2.135	181.996	19.09
Feb. 08 2011		8:49:29	18.546	1.98	180.07	18.873
Feb. 08 2011		8:50:29	19.932	1.075	76.419	9.106
Feb. 08 2011		8:51:29	18.204	2.277	146.677	13.324
Feb. 08 2011		8:52:29	18.172	2.268	243.683	14.284
Feb. 08 2011		8:53:29	18.172	2.226	232.971	14.998
Feb. 08 2011		8:54:29	18.186	2.21	236.682	15.409
Feb. 08 2011		8:55:29	18.171	2.268	224.317	16.2
Feb. 08 2011		8:56:29	18.171	2.232	226.982	16.757
Feb. 08 2011		8:57:29	18.244	2.164	235.072	16.692
Feb. 08 2011		8:58:29	18.279	2.165	235.395	16.542
Feb. 08 2011		8:59:29	18.272	2.156	233.349	16.805
Feb. 08 2011		9:00:29	18.293	2.148	231.799	17.109
Feb. 08 2011		9:01:29	18.316	2.152	227.174	16.892
Feb. 08 2011		9:02:29	18.309	2.146	226.43	17.424
Feb. 08 2011		9:03:29	18.332	2.143	229.616	17.554
Feb. 08 2011		9:04:29	18.364	2.15	225.002	17.588
Feb. 08 2011		9:05:29	18.328	2.143	227.037	17.947
Feb. 08 2011		9:06:29	18.344	2.128	228.585	18.433
Feb. 08 2011		9:07:29	18.335	2.157	216.558	18.384
Feb. 08 2011		9:08:29	18.335	2.157	220.09	18.776
Feb. 08 2011		9:09:29	18.519	2.002	217.538	18.964
Feb. 08 2011		9:10:29	19.929	1.136	90.812	9.542

Datalogger Printout - Furnace No. 4

Feb. 08 2011		9:11:29	18.315	2.234	122.271	14.266
Feb. 08 2011		9:12:29	18.252	2.25	179.744	15.51
Feb. 08 2011		9:13:29	18.212	2.245	181.733	16.686
Feb. 08 2011		9:14:29	18.285	2.184	175.911	17.056
Feb. 08 2011		9:15:29	18.274	2.207	180.336	17.491
Feb. 08 2011		9:16:29	18.283	2.17	183.35	17.831
Feb. 08 2011		9:17:29	18.302	2.174	184.32	17.992
Feb. 08 2011		9:18:29	18.35	2.158	185.958	17.934
Feb. 08 2011		9:19:29	18.297	2.169	189.879	18.561
Feb. 08 2011		9:20:29	18.292	2.196	186.065	19.13
Feb. 08 2011		9:21:29	18.311	2.163	184.337	19.067
Feb. 08 2011		9:22:29	18.317	2.162	186.605	19.605
Feb. 08 2011		9:23:29	18.34	2.182	178.831	19.509
Feb. 08 2011		9:24:29	18.368	2.153	183.224	19.611
Feb. 08 2011		9:25:29	18.349	2.151	185.642	19.967
Feb. 08 2011		9:26:29	18.389	2.156	182.594	20.108
Feb. 08 2011		9:27:29	18.386	2.16	180.4	20.326
Feb. 08 2011		9:28:29	18.366	2.154	184.942	20.925
Feb. 08 2011		9:29:29	18.537	2.038	181.443	20.97
Feb. 08 2011		9:30:29	19.923	1.108	74.835	10.391
Feb. 08 2011		9:31:29	18.199	2.28	154.393	15.098
Feb. 08 2011		9:32:29	18.17	2.272	243.248	15.928
Feb. 08 2011		9:33:29	18.184	2.233	237.488	16.754
Stopped Test:	**1**	9:34:11				
Started Test:	**2**	10:19:41				
Feb. 08 2011		10:20:29	16.15	3.849	428.478	33.029
Feb. 08 2011		10:21:29	16.147	3.886	428.416	33.435
Feb. 08 2011		10:22:29	16.184	3.895	425.725	33.833
Feb. 08 2011		10:23:29	16.17	3.839	423.563	34.453
Feb. 08 2011		10:24:29	16.121	3.893	428.026	34.866
Feb. 08 2011		10:25:29	16.014	3.982	427.781	35.572
Feb. 08 2011		10:26:29	16.071	3.939	429.473	35.718
Feb. 08 2011		10:27:29	16.084	3.969	426.687	35.993
Feb. 08 2011		10:28:29	16.126	3.913	422.98	36.464
Feb. 08 2011		10:29:29	16.559	3.605	410.818	35.754
Feb. 08 2011		10:30:29	19.197	2.01	160.47	17.617
Feb. 08 2011		10:31:29	16.369	3.838	231.821	26.918
Feb. 08 2011		10:32:29	16.305	3.82	344.589	28.948
Feb. 08 2011		10:33:29	16.272	3.815	340.575	30.695
Feb. 08 2011		10:34:29	16.289	3.843	333.99	31.798
Feb. 08 2011		10:35:29	16.318	3.835	338.25	32.127
Feb. 08 2011		10:36:29	16.324	3.797	340.883	32.678
Feb. 08 2011		10:37:29	16.331	3.831	338.657	33.086
Feb. 08 2011		10:38:29	16.33	3.833	338.682	33.337
Feb. 08 2011		10:39:29	16.326	3.815	342.038	34.044
Feb. 08 2011		10:40:29	16.348	3.826	343.575	34.235
Feb. 08 2011		10:41:29	16.347	3.813	339.933	34.509
Feb. 08 2011		10:42:29	16.36	3.775	342.034	35.352
Feb. 08 2011		10:43:29	16.35	3.84	334.66	35.901
Feb. 08 2011		10:44:29	16.328	3.836	343.428	36.454
Feb. 08 2011		10:45:29	16.35	3.763	349.645	37.115
Feb. 08 2011		10:46:29	16.366	3.827	339.502	37.569

Datalogger Printout - Furnace No. 4

Feb. 08 2011		10:47:29	16.374	3.827	342.475	37.597
Feb. 08 2011		10:48:29	16.363	3.751	345.69	38.636
Feb. 08 2011		10:49:29	16.731	3.515	338.48	38.643
Feb. 08 2011		10:50:29	19.131	2.008	134.105	18.519
Feb. 08 2011		10:51:29	16.115	3.958	277.84	26.39
Feb. 08 2011		10:52:29	15.994	3.972	433.144	27.926
Feb. 08 2011		10:53:29	16.051	3.926	427.26	28.81
Feb. 08 2011		10:54:29	16.043	3.949	432.489	29.666
Feb. 08 2011		10:55:29	16.073	3.91	422.351	30.233
Feb. 08 2011		10:56:29	16.107	3.846	430.247	30.598
Feb. 08 2011		10:57:29	16.132	3.876	427.421	30.721
Feb. 08 2011		10:58:29	16.159	3.839	430.374	31.041
Feb. 08 2011		10:59:29	16.184	3.857	418.259	31.587
Feb. 08 2011		11:00:29	16.18	3.844	420.611	31.94
Feb. 08 2011		11:01:29	16.156	3.851	416.651	32.652
Feb. 08 2011		11:02:29	16.195	3.857	411.649	32.965
Feb. 08 2011		11:03:29	16.207	3.834	413.115	32.939
Feb. 08 2011		11:04:29	16.22	3.834	409.121	33.042
Feb. 08 2011		11:05:29	16.233	3.814	411.039	33.182
Feb. 08 2011		11:06:29	16.214	3.873	409.035	33.816
Feb. 08 2011		11:07:29	16.213	3.841	416.559	34.345
Feb. 08 2011		11:08:29	16.218	3.844	406.904	35.03
Feb. 08 2011		11:09:29	16.585	3.602	411.497	34.85
Feb. 08 2011		11:10:29	19.202	2.025	156.516	17.281
Feb. 08 2011		11:11:29	16.43	3.821	226.082	25.749
Feb. 08 2011		11:12:29	16.313	3.833	326.721	28.525
Feb. 08 2011		11:13:29	16.289	3.827	323.555	30.209
Feb. 08 2011		11:14:29	16.321	3.836	312.714	31.203
Feb. 08 2011		11:15:29	16.348	3.811	311.742	31.358
Feb. 08 2011		11:16:29	16.359	3.785	316.335	31.951
Feb. 08 2011		11:17:29	16.344	3.834	319.464	32.506
Feb. 08 2011		11:18:29	16.348	3.795	322.706	33.295
Feb. 08 2011		11:19:29	16.361	3.839	311.84	33.702
Feb. 08 2011		11:20:29	16.374	3.796	313.81	34.009
Stopped Test:	2	11:20:48				
Started Test:	3	12:17:07				
Feb. 08 2011		12:17:29	16.073	3.861	424.055	28.403
Feb. 08 2011		12:18:29	16.088	3.888	420.322	28.432
Feb. 08 2011		12:19:29	16.074	3.878	410.525	29.117
Feb. 08 2011		12:20:29	16.103	3.839	419.887	29.374
Feb. 08 2011		12:21:29	16.105	3.859	414.322	29.772
Feb. 08 2011		12:22:29	16.127	3.83	419.762	29.976
Feb. 08 2011		12:23:29	16.179	3.835	418.215	30.345
Feb. 08 2011		12:24:29	16.132	3.818	407.004	30.888
Feb. 08 2011		12:25:29	16.152	3.832	413.167	31.128
Feb. 08 2011		12:26:29	16.168	3.828	415.877	31.363
Feb. 08 2011		12:27:29	16.168	3.85	414.423	31.905
Feb. 08 2011		12:28:29	16.195	3.826	412.7	32.184
Feb. 08 2011		12:29:29	16.869	3.282	416.298	31.946
Feb. 08 2011		12:30:29	18.879	2.289	128.8	13.989
Feb. 08 2011		12:31:29	16.295	3.847	236.36	24.726
Feb. 08 2011		12:32:29	16.25	3.813	326.857	26.35

Datalogger Printout - Furnace No. 4

Feb. 08 2011		12:33:29	16.23	3.77	323.269	27.802
Feb. 08 2011		12:34:29	16.244	3.791	321.948	28.547
Feb. 08 2011		12:35:29	16.272	3.744	322.558	28.916
Feb. 08 2011		12:36:29	16.305	3.801	324.925	29.028
Feb. 08 2011		12:37:29	16.332	3.782	324.397	29.263
Feb. 08 2011		12:38:29	16.308	3.751	326.989	29.862
Feb. 08 2011		12:39:29	16.315	3.746	333.941	30.364
Feb. 08 2011		12:40:29	16.315	3.822	324.716	30.789
Feb. 08 2011		12:41:29	16.325	3.743	329.25	31.161
Feb. 08 2011		12:42:29	16.319	3.729	332.731	32.075
Feb. 08 2011		12:43:29	16.333	3.779	326.477	32.157
Feb. 08 2011		12:44:29	16.329	3.737	329.909	32.678
Feb. 08 2011		12:45:29	16.328	3.736	331.162	33.367
Feb. 08 2011		12:46:29	16.34	3.78	328.808	33.64
Feb. 08 2011		12:47:29	16.339	3.719	321.701	33.925
Feb. 08 2011		12:48:29	16.338	3.717	321.436	34.55
Feb. 08 2011		12:49:29	17	3.272	312.681	34.072
Feb. 08 2011		12:50:29	18.729	2.328	105.83	14.643
Feb. 08 2011		12:51:29	15.976	3.978	303.372	24.685
Feb. 08 2011		12:52:29	15.968	3.938	439.847	25.343
Feb. 08 2011		12:53:29	15.994	3.918	423.034	26.284
Feb. 08 2011		12:54:29	15.993	3.926	416.839	27.22
Feb. 08 2011		12:55:29	16.066	3.855	420.544	27.635
Feb. 08 2011		12:56:29	16.079	3.902	426.12	28.316
Feb. 08 2011		12:57:29	16.073	3.869	431.972	29.091
Feb. 08 2011		12:58:29	16.08	3.885	432.948	29.462
Feb. 08 2011		12:59:29	16.093	3.874	427.029	30.199
Feb. 08 2011		13:00:29	16.13	3.822	424.228	30.682
Feb. 08 2011		13:01:29	16.114	3.872	424.063	30.873
Feb. 08 2011		13:02:29	16.113	3.854	429.201	31.425
Feb. 08 2011		13:03:29	16.168	3.798	422.578	31.702
Feb. 08 2011		13:04:29	16.182	3.835	415.16	31.824
Feb. 08 2011		13:05:29	16.162	3.833	420.834	32.322
Feb. 08 2011		13:06:29	16.165	3.829	425.785	33.179
Feb. 08 2011		13:07:29	16.172	3.841	416.266	33.564
Feb. 08 2011		13:08:29	16.165	3.803	414.668	33.801
Feb. 08 2011		13:09:29	16.907	3.295	409.855	33.404
Feb. 08 2011		13:10:29	18.871	2.237	128.926	14.478
Feb. 08 2011		13:11:29	16.333	3.756	248.962	24.861
Feb. 08 2011		13:12:29	16.214	3.798	330.039	27.58
Feb. 08 2011		13:13:29	16.221	3.747	319.193	28.906
Feb. 08 2011		13:14:29	16.249	3.808	311.768	29.457
Feb. 08 2011		13:15:29	16.284	3.765	308.285	29.868
Feb. 08 2011		13:16:29	16.29	3.724	321.284	30.658
Feb. 08 2011		13:17:29	16.314	3.748	321.566	31.201
Feb. 08 2011		13:18:29	16.327	3.711	325.28	31.74
Feb. 08 2011		13:19:29	16.334	3.723	326.625	32.159
Stopped Test:	3	13:19:44				

Datalogger Printout - Furnace No. 4

Started Test:	4	13:47:30				
Feb. 08 2011		13:48:29	16.302	3.689	406.991	36.398
Feb. 08 2011		13:49:29	17.043	3.128	403.465	34.491
Feb. 08 2011		13:50:29	18.844	2.2	120.157	15.75
Feb. 08 2011		13:51:29	16.369	3.678	230.416	27.33
Feb. 08 2011		13:52:29	16.435	3.595	318.401	27.732
Feb. 08 2011		13:53:29	16.356	3.638	318.186	28.967
Feb. 08 2011		13:54:29	16.388	3.657	313.932	29.858
Feb. 08 2011		13:55:29	16.435	3.597	320.998	29.929
Feb. 08 2011		13:56:29	16.424	3.66	323.97	30.453
Feb. 08 2011		13:57:29	16.489	3.585	320.154	30.906
Feb. 08 2011		13:58:29	16.503	3.549	319.61	31.562
Feb. 08 2011		13:59:29	16.522	3.585	318.226	31.492
Feb. 08 2011		14:00:29	16.462	3.59	320.34	32.407
Feb. 08 2011		14:01:30	16.546	3.519	327.479	32.711
Feb. 08 2011		14:02:29	16.508	3.541	316.976	33.194
Feb. 08 2011		14:03:30	16.444	3.586	321.148	34.075
Feb. 08 2011		14:04:29	16.477	3.593	327.994	34.419
Feb. 08 2011		14:05:29	16.491	3.547	333.594	34.647
Feb. 08 2011		14:06:29	16.506	3.516	340.337	34.922
Feb. 08 2011		14:07:29	16.555	3.542	326.877	34.727
Feb. 08 2011		14:08:30	16.498	3.568	320.755	35.41
Feb. 08 2011		14:09:29	17.143	3.052	327.717	34.957
Feb. 08 2011		14:10:29	18.765	2.294	105.745	15.284
Feb. 08 2011		14:11:29	16.188	3.782	306.166	24.942
Feb. 08 2011		14:12:29	16.115	3.788	425.599	26.222
Feb. 08 2011		14:13:29	16.1	3.853	408.214	27.293
Feb. 08 2011		14:14:29	16.163	3.809	409.832	28.117
Feb. 08 2011		14:15:29	16.155	3.8	422.365	28.676
Feb. 08 2011		14:16:30	16.217	3.783	413.232	28.96
Feb. 08 2011		14:17:29	16.251	3.777	414.467	29.044
Feb. 08 2011		14:18:29	16.233	3.733	415.849	29.622
Feb. 08 2011		14:19:29	16.234	3.733	407.519	30.338
Feb. 08 2011		14:20:29	16.254	3.743	413.882	30.332
Feb. 08 2011		14:21:29	16.291	3.713	406.356	30.752
Feb. 08 2011		14:22:29	16.305	3.76	407.571	30.926
Feb. 08 2011		14:23:29	16.286	3.736	407.855	31.969
Feb. 08 2011		14:24:29	16.279	3.726	407.604	32.361
Feb. 08 2011		14:25:29	16.306	3.8	405.396	32.294
Feb. 08 2011		14:26:29	16.3	3.786	400.289	32.995
Feb. 08 2011		14:27:29	16.364	3.696	405.328	33.055
Feb. 08 2011		14:28:29	16.341	3.78	394.58	33.563
Feb. 08 2011		14:29:29	17.026	3.238	403.559	32.873
Feb. 08 2011		14:30:29	18.887	2.235	127.857	14.528
Feb. 08 2011		14:31:29	16.454	3.69	241.083	25.436
Feb. 08 2011		14:32:29	16.443	3.662	314.788	27.082
Feb. 08 2011		14:33:29	16.423	3.64	309.384	28.401
Feb. 08 2011		14:34:29	16.368	3.703	315.578	29.766
Feb. 08 2011		14:35:29	16.429	3.616	312.111	30.271
Feb. 08 2011		14:36:29	16.431	3.686	316.755	30.691
Feb. 08 2011		14:37:29	16.391	3.689	317.92	31.465
Feb. 08 2011		14:38:29	16.41	3.666	325.642	31.875

Datalogger Printout - Furnace No. 4

Feb. 08 2011		14:39:29	16.441	3.666	323.558	32.004
Feb. 08 2011		14:40:29	16.45	3.634	320.208	32.487
Feb. 08 2011		14:41:29	16.439	3.706	318.336	32.69
Feb. 08 2011		14:42:29	16.446	3.664	334.497	33.384
Feb. 08 2011		14:43:29	16.458	3.687	329.917	33.808
Feb. 08 2011		14:44:29	16.455	3.71	326.966	33.843
Feb. 08 2011		14:45:29	16.475	3.626	333.189	34.286
Feb. 08 2011		14:46:29	16.489	3.662	331.454	34.687
Feb. 08 2011		14:47:29	16.49	3.633	320.79	35.2
Feb. 08 2011		14:48:29	16.493	3.608	325.759	35.698
Stopped Test:	4	14:48:55				

3-Point Stratification Check

Saint Gobain
Furnace #4
Exhaust

	O2	CO2	NOx	SO2
Pt-1	16.16	3.87	426.55	33.69
Pt-2	16.07	3.95	427.99	35.54
Pt-3	17.06	3.34	306.52	29.19
Mean	**16.43**	**3.72**	**387.02**	**32.80**

Pt-1 diff. from mean	1.64%	4.01%	10.21%	2.69%
Pt-2 diff. from mean	2.19%	6.12%	10.59%	8.33%
Pt-3 diff. from mean	3.83%	10.13%	20.80%	11.02%

Results based on % difference from mean

Traverse:	O2	CO2	NOx	SO2
1-pt (<5% difference)	yes	no	no	no
3-pt (<10% difference)	no	no	no	no
12-pt (>10% difference)	no	yes	yes	yes

Pt-1 absolute difference	0.27	0.15	39.53	0.88
Pt-2 absolute difference	0.36	0.23	40.97	2.73
Pt-3 absolute difference	0.63	0.38	80.50	3.62

Results based on absolute difference in concentration

Traverse:	O2	CO2	NOx	SO2
1-pt (<0.5ppm difference)	no	yes	no	no
3-pt (<1ppm difference)	yes	no	no	no
12-pt (>1ppm difference)	no	no	yes	yes

Furnace No. 4: Flow Rate and Moisture

Results and Example Calculations

Field Data

Moisture Catch Field Data & Worksheets

Traverse Point Locations

Flow Rate and Moisture

Client	Saint Gobain	Feb. 08 2011	Date
Source	Furnace #4	PS	Operator
Location	Exhaust	4212	Job #
		mew	Analyist/QA

Definitions	Symbol	Units	Run 2	Run 3	Run 4	Average
Time, Starting			10:19	12:17	13:47	
Time, Ending			11:20	13:19	14:48	
Volume, Gas sample	Vm	dcf	33.668	33.579	33.501	33.58
Temperature, Dry gas meter	Tm	°F	54.31	52.15	53.88	53.44
Temperature, Stack gas	Ts	°F	362.79	364.83	365.58	364.40
Pressure differential across orifice	dH	in H2O	1.100	1.100	1.100	1.10
Average square root velocity pressure	dp^½	in H2O^½	0.751	0.678	0.699	
Pitot tube coefficient	Cp		0.8387	0.8387	0.8387	
Dry gas meter calibration factor	Y		0.98370	0.98370	0.98370	
Pressure, Barometric	Pbar	in Hg	30.30	30.30	30.30	
Pressure, Static Stack	Pg	in H2O	-0.7	-0.7	-0.7	
Time, Total sample	Ø	min	60	60	60	60
Stack Area	As	in^2	1272.4	1272.4	1272.4	
Nozzle Area	An	in^2	0.0491	0.0491	0.0491	
Volume of condensed water	Vlc	ml	40.4	38.4	42.4	40.4
Oxygen		% O2	16.60	16.56	16.74	16.63
Carbon Dioxide		% CO2	3.75	3.71	3.57	3.67
Molecular weight, Dry Stack	Md	lbm / lbmole	29.39	29.38	29.36	29.38
Pressure, Absolute Stack	Ps	in Hg	30.25	30.25	30.25	30.25
Pressure, avg arcoss orifice	Po	in Hg	30.38	30.38	30.38	30.38
Volume, Dry standard gas sample	Vm(std)	dscf	34.52	34.58	34.38	34.49
Volume, Water Vapor	Vw(std)	scf	1.90	1.81	2.00	1.90
Moisture, % Stack (EPA 4)	Bws(1)	%	5.22	4.97	5.49	5.23
Moisture, % Stack (Psychrometry-Sat)	Bws(2)	%	na	na	na	
Moisture, % Stack (Theoretical)	Bws(3)	%	na	na	na	
Moisture, % Stack (Psychrometry)	Bws(4)	%	na	na	na	
Moisture, % Stack (Predicted)	Bws(5)	%	na	na	na	
Mole Fraction dry Gas	mfg		94.8%	95.0%	94.5%	94.8%
Molecular weight, Wet Stack	Ms	lbm / lbmole	28.79	28.81	28.74	28.78
Velocity, Stack gas	vs	fpm	3,140	2,838	2,928	2,969
Volumetric Flowrate, Actual	Qa	acf/min	27,748	25,076	25,872	26,232
Volumetric Flowrate, Dry Standard	Qsd	dscf/min	17,057	15,417	15,805	16,093

Client: Saint Gobain Date 2/8/2011

Source Furnace No. 4 Project # 4212 Run # 2

Molecular Weights (lb/lbmol):

CO_2=44.01	O_2=31.999	N_2+Ar=28.154	H_2O=18.015	atm=28.965

Constants:

Pstd(1)=29.92129 in Hg	Tstd=527.67 °R	Kp=5129.4	C2=816.5455inHg $in^2/°R\ ft^2$

Pressure, Absolute Stack (Ps):

$$Ps, inHg = P_{Barometric} + \frac{P_{static}}{13.6} = 30.3\ inHg + \frac{-0.7\ in\ H2O}{13.6} = 30.25\ inHg$$

Volume, Dry Standard Gas Sample (Vm[std]): $Tm = 52.2 \circ F + 459.7 = 511.9 \circ R$

$$Orifice\ Pr\ ess = Pb\ 30.3\ inHg + \frac{1.1\ \Delta H}{13.6} = 30.38\ inHg$$

$$Vm(std)\ ft^3 = \frac{Y \times MeterVol \times Tstd \times Orifice\ Pr\ es(Po)}{Pstd(1) \times Tm \circ R}$$

$$= \frac{0.98370 \times 33.579\ ft^3 \times 527.67 \circ R \times (Po\ 30.38\ inHg)}{29.9213 inHg \times 511.9 \circ R} = 34.57\ dscf$$

Moisture, % Stack Gas (bws): $V_{wstd} = 0.04707 \times Cond.H2O, ml = 0.04707 \times 38.4\ ml = 1.81\ scf$

$$bws = 100 \times \frac{V_{wstd}}{V_{wstd} + V_{mstd}} = \frac{1.81\ scf}{1.81\ scf + 34.57\ dscf} = 4.98\ \%$$

Mole Fraction Gas (mfg): $1 - \frac{bws}{100} = 1 - \frac{4.98\ \%}{100} = 0.9502$

Molecular Weight, Dry, Stack (Md):

$$Md \frac{lb}{lbmol} = \left[(1 - \frac{O_2}{100} - \frac{CO_2}{100}) \times MolWtN2Ar\right] + \left[\frac{O_2}{100} \times MolWtO2\right] + \left[\frac{CO_2}{100} \times MolWtCO2\right]$$

$$= \left[(1 - \frac{16.56\ \%O_2}{100} - \frac{3.71\ \%CO_2}{100}) \times 28.154 \frac{lb}{lbmol}\right] + \left[\frac{16.56\ \%O_2}{100} \times 31.999 \frac{lb}{lbmol}\right] + \left[\frac{3.71\ \%CO_2}{100} \times 44.010 \frac{lb}{lbmol}\right]$$

$$= 29.38\ \frac{lb}{lbmol}$$

Client: Saint Gobain Date 2/8/2011

Molecular Weight, Wet, Stack (Ms):

$$Ms\,\frac{lb}{lbmol} = (Md \times mfg) + (MolWtH_2O \times (1 - mfg)) = \left(\frac{29.30\ lb}{lbmol} \times 0.9502\right) + (18.015 \times (1 - .9502))$$

$$= \underline{28.81}\ \frac{lb}{lbmol}$$

Stack gas (vs): $Ts = \underline{364.8} \circ F + 459.7 = \underline{824.5} \circ R$

$$= vs\,\frac{feet}{\min} = Kp \times Cp \times dp\sqrt{inH_2O} \times \sqrt{\frac{Ts \circ R}{Ps \times Ms}}$$

$$= 5129.4\,ft/\min \ldots \times \underline{0.8387} \times \underline{0.678}\ dp\sqrt{inH_2O} \times \sqrt{\frac{\underline{824.5} \circ R}{\underline{30.25}\ inHg \times \underline{28.81}\ \frac{lb}{lbmol}}} = \underline{2,837}\ \frac{ft}{\min}$$

Flow Rate, Actual (Qa):

$$Qa\,\frac{actualCubicFeet}{\min} = \frac{AreaStack \times vs}{144} = \frac{\underline{1272.4}\ in^2 \times \underline{2,837}\ \frac{ft}{\min}}{144} = \underline{25,068}\ acfm$$

Flow Rate, Dry Standard (Qsd):

$$Qsd\,\frac{dryStdFt^3}{\min} = \frac{Qa \times Tstd \times mfg \times Ps}{Pstd(1) \times Ts \circ R} = \frac{\underline{25,068}\ acfm \times 527.67 \circ R \times \underline{0.9502} \times \underline{30.25}\ inHg}{29.9213 inHg \times \underline{824.5} \circ R}$$

$$= \underline{15,412}\ \frac{dscf}{\min}$$

EPA M-23 Field Data Sheet

HORIZON ENGINEERING INC
13585 NE Whitaker Way
Portland, OR 97230
Phone (503) 255-5050
Fax (503) 255-0505

Client: St. Gobain
Plant: Seattle, Wa
Location: #4 Stack
Sample Location: outlet

Date 2-8-11
Test Method 4
Concurrent Testing Gasses
Run # 2
Operator Busch Support King
Temperature, Amb (Ta) 47
Moisture Tdb Twb
Press., Static (Pstat) -.7 Press., Bar (Pb) 30.3
Cyclonic Flow Expected ? No If yes, avg. null angle — degrees

Probe 35-9 Cp .83817 Heat Set 250 °F
Post-Test Pitot Inspection (NC=no change, D=damaged)
Pitot Lk Rate in H2O@in H2O Pre: Hi 0 @ 4 Post 0 @ 5 Lo 0 @ 4 0 @ 5
Nozzle NA Sample Box 327
Filter NA Heat Set 250 °F
Meter Box #3 dH@ 1.8010 Y .9837
Meter Leak Check Pretest: .004 cfm 22 inHg Post: .004 cfm 24 inHg

Stack Diagram

Traverse Point Number	Sampling Time min (dt)	Clock Time (24 hr)	Dry Gas Meter Reading cuft (Vm)	Velocity Head in H2) (dPa)	Orifice Pressure in H2O DESIRED	Orifice Pressure H2O ACTUAL (dH)	STACK °F (Ts) Amb:	PROBE °F (Tp) Amb:	OVEN Filter °F (To) Amb:	TRAP °F (Tt) Amb:	IMPINGER Outlet °F (Ti) Amb:	METER Inlet/Avg. °F (Tm-in) Amb:	METER Outlet °F (Tm-out) Amb:	Pump Vacuum inHg (Pv)
		10:19	583.700	SR#2										
1	2.5		585.48	.4656	1.1	1.1	383	252	249	NA	42	53	51	2
2	5.0		586.88	.5365			385	250	249		43	52	51	2
3	7.5		—	.5196			386	250	247		43	55	51	2
4	10.0		589.65	.7501			334	250	248		43	57	52	2
5	12.5		591.04	.5595			344	250	248		44	57	52	2
6	15.0		592.42	.4699			353	250	248		46	59	53	2
7	17.5		—	.4497			350	250	250		46	59	53	2
8	20.0		595.23	.6462			353	250	250		46	59	53	2
9	22.5		596.62	.5427			357	250	250		46	59	53	2
10	25.0		598.00	.5635			357	250	252		45	59	53	2
11	27.5		599.37	.3976			360	250	250		46	58	53	2
12	30.0		600.74	.5308			346	250	250		46	58	53	2
1	32.5		602.12	1.73			366	250	250		46	58	53	2
2	35.0		603.50	1.75			365	250	249		45	57	53	2
3	37.5		604.99	1.91			376	250	250		45	56	53	2
4	40.0		606.28	1.53			381	250	250		45	56	53	2
5	42.5		607.66	.9980			382	250	249		45	56	53	2
6	45.0		—	.6718			386	250	250		45	54	53	2
7	47.5		610.43	.3789			356	250	250		45	54	53	2
8	50.0		611.83	.1460			340	250	250		45	55	53	2
9	52.5		613.22	.1064			357	250	250		46	54	52	2
10	55.0		614.60	.0957			360	250	250		46	56	52	2
11	57.5		615.98	.0689			364	250	250		46	54	52	2
12	60.0	11:19	617.368	.0859			366	250	250		46	54	52	2
25														

Notes:

EPA M-23 Field Data Sheet

HORIZON ENGINEERING INC
13585 NE Whitaker Way
Portland, OR 97230
Phone (503) 255-5050
Fax (503) 255-0505

Client: St. Gobin
Plant: Seattle, Wa
Location: Stack #4
Sample Location: Outlet

Date 2-8-11
Test Method #4
Concurrent Testing Gases
Run # 3

Probe 35-91 Cp .8387 Heat Set 250 °F
Post-Test Pitot Inspection (NC=no change, D=damaged)
Pitot Lk Rate in H2O@in H2O Pre: Hi 0 @ 4 Post 0 @ 6 Lo 0 @ 6 0 @ 4

Stack Dingram
ALT-011
Std TC (ID/°F) TR3/45
Stack TC (ID/°F) 4-5/45
Continuity Check ↑ or ↓

Operator Bush Support Kline
Temperature, Amb (Ta) 47
Moisture — Tdb — Twb —
Press., Static (Pstat) -.7 Press., Bar (Pb) 30.3
Cyclonic Flow Expected ? No If yes, avg. null angle — degrees

Nozzle NA Oven 327 Imp. Outlet 1-4
Filter NA Heat Set 250 °F
Meter Box #3 dH@ 1.8010 Y 0.9837
Meter Leak Check Pretest: .003 cfm 24 inHg Post: .003 cfm 23 inHg

Traverse Point Number	Sampling Time min (dt)	Clock Time (24 hr)	Dry Gas Meter Reading cuft (Vm)	Velocity Head in H2) (dPs) SR#2	Orifice Pressure in H2O DESIRED	Orifice Pressure H2O ACTUAL (dH)	STACK °F (Ts) Amb:	PROBE °F (Tp) Amb:	OVEN Filter °F (To) Amb:	TRAP °F (Tt) Amb:	IMPINGER Outlet °F (Ti) Amb:	METER Inlet/Avg. °F (Tm-in) Amb:	METER Outlet °F (Tm-out) Amb:	Pump Vacuum inHg (Pv)
		12:17	617.700											
1	2.5		619.17	1.39	1.1	1.1	396	250	250	NA	43	45	45	1
2	5.0		620.54	1.73			397	250	249		43	50	49	1
3	7.5		621.95	1.38			396	250	248		44	52	49	1
4	10.0		—	.9691			394	250	250		46	51	48	1
5	12.5		624.74	.7078			359	249	250		46	53	49	1
6	15.0		626.13	.9004			347	250	250		47	54	49	1
7	17.5		—	.1647			350	250	250		47	54	49	1
8	20.0		628.90	.1555			356	250	250		47	54	50	1
9	22.5		—	.1261			360	250	250		47	54	50	1
10	25.0		—	.1190			362	250	250		47	54	50	1
11	27.5		—	.1021			362	250	250		47	54	50	1
12	30.0		634.38	.0559			360	250	250		47	54	50	1
13	32.5		—	.3385			357	250	250		50	56	51	1
14	35.0		637.12	.5184			365	250	250		52	56	52	1
15	37.5		638.48	.6113			373	250	250		54	57	51	1
16	40.0		639.84	.4808			375	250	250		54	56	51	1
17	42.5		641.17	.3578			382	250	250		55	56	51	1
18	45.0		642.62	.3822			383	250	250		54	56	51	1
19	47.5		—	.1925			387	250	250		53	56	51	1
20	50.0		645.57	.0884			330	250	250		53	56	51	1
21	52.5		647.00	.1716			337	250	250		53	56	51	1
22	55.0		648.44	.6132			344	250	249		52	56	51	1
23	57.5		649.86	.4719			345	250	251		52	56	51	1
24	60.0	13:17	651.279	.5607	↓	↓	344	250	251	↓	52	56	51	1
25														

Notes:

* Added Ice

Field Data Sheet

HORIZON ENGINEERING INC
13585 NE Whitaker Way
Portland, OR 97230
Phone (503) 255-5050
Fax (503) 255-0505

Client: St. Gobain
Plant: Seattle, WA
Location: Furnace #4
Sample Location: outlet

Date 2/8/11
Test Method 4
Concurrent Testing Gas
Run # 1
Operator MD/KK Support PS
Temperature, Ambient (Ta) ~52
Moisture — Tdb — Twb
Press., Static (Pstat) -.7 Press., Bar (Pb) 30.3
Cyclonic Flow Expected ?____ If yes, avg. null angle_____ degrees

Stack Diagram
ALT-011
Std TC (ID/°F) —
Stack TC (ID/°F) —
Continuity Check ↑ or ↓

Probe 3S-1 (g/s) Cp .8347 Heat Set 250 °F
Post-Test Pitot Inspection (NC=no change, D=damaged)
Pitot Lk Rate in H2O@in H2O — Pre: Hi 0 @6 Post 0 @6 Lo 0 @6 0 @6
Nozzle — Oven 377 Imp. Outlet 74
Filter Bypass Heat Set 250 °F
Meter Box 3 dH@ 1.8610 Y .9837
Meter Leak Check — Pretest: .003 cfm 18 inHg Post: .002 cfm 15 inHg

Traverse Point Number	Sampling Time min (dt)	Clock Time (24 hr)	Dry Gas Meter Reading cuft (Vm)	Velocity Head in H2) (dPs)	Orifice Pressure in H2O DESIRED	Orifice Pressure H2O ACTUAL (dH)	STACK °F (Ts) Amb:	PROBE °F (Tp) Amb:	OVEN Filter °F (To) Amb:	IMPINGER Outlet °F (Ti) Amb:	METER Inlet/Avg. °F (Tm-in) Amb:	METER Outlet °F (Tm-out) Amb:	Pump Vacuum inHg (Pv)
		13:47	651.500										
1 1	2.5		652.87	.3936	1.1	1.1	344	249	249	45	53	51	1
2 2	5		654.31	.7537			352	250	251	45	54	51	1
3 3	7.5		655.74	.7784			357	250	250	45	55	51	1
4 4	10		—	.5500			360	250	250	46	55	51	1
5 5	12.5		658.58	.4199			364	250	250	46	57	51	1
6 6	15		—	.4547			369	250	250	46	57	51	1
7 7	17.5		661.40	.2933			370	250	250	45	57	51	1
8 8	20		662.78	.6229			372	250	249	46	57	51	1
9 9	22.5		664.18	.5688			360	250	250	45	57	51	1
10 10	25		665.56	.4434			378	250	250	45	57	51	1
11 11	27.5		666.95	.2141			382	250	250	45	58	51	1
12 12	30		—	.4696			390	250	249	45	58	51	1
1 1	32.5		—	1.67			391	250	250	45	58	51	1
2 2	35		671.11	1.39			394	250	249	45	58	51	1
3 3	37.5		—	1.42			395	250	250	45	58	51	1
4 4	40		673.88	1.11			395	250	250	45	57	51	1
5 5	42.5		675.27	.9831			370	250	250	45	57	51	1
6 6	45		676.66	.6902			344	250	250	45	57	51	1
7 7	47.5		678.07	.1329			346	250	250	46	57	51	1
8 8	50		679.44	.1218			350	250	250	46	57	51	1
9 9	52.5		680.84	.1538			352	251	250	46	57	51	1
10 10	55		682.23	.0759			354	250	251	46	57	51	1
11 11	57.5		683.62	.0549			357	250	249	46	57	51	1
12 12	60	14:47	685.001	.0730	↓	↓	358	250	250	47	57	51	1
													72

Notes:

Sample Recovery / Moisture Catch

Saint Gobain
Furnace #4
Exhaust

Feb. 08 2011
PS
4212
mew

Definitions	Symbol	Units	Run 1	Run 2	Run 3	Run 4
Impinger Contents						
	Impinger, Contents,Condensate & Rinse					
	Impinger, Contents & Condensate	g		538.00	534.00	538.00
spg (g/ml)	Impinger	g		304.00	306.00	306.00
0.99823	H2O	ml		200.00	200.00	200.00
	Condensate	g		34.35	28.35	32.35
Silica Gel Impinger	Final weight	g		526.00	530.00	530.00
	Initial weight	g		520.00	520.00	520.00
	Gain	g		6.00	10.00	10.00
Total Moisture Gain	Condensate + Silica Gel gain	g		40.35	38.35	42.35
Vlc	**Net Moisture Gain**	ml		40.43	38.42	42.43
General Remarks	Sample Appearance					
	Container Marked					
	pH of Condensate					

HORIZON ENGINEERING inc
13585 NE Whitaker Way • Portland, OR 97230
Phone (503) 255-5050 • Fax (503) 255-0505
www.horizonengineering.com

Sample Recovery Worksheet

Client & Source: St. Globin - Stack #4 Test Date: 2-8-11

Sample Location: Outlet Initials: Busch + Kline

Balance Calibration (1000, 500, 200 g)
Need one per each 3-run test: 1003 / 500 / 200

538
504
34

538
506
28

538
506
28

IMPINGER CONTENTS	RUN 2	RUN 3	RUN 4
Container, condensate & rinse, grams			
Container & condensate, grams	538	534	538
Empty container, grams	304	306	306
Initial volume, ml	200	200	200
Initial contents	H_2O	H_2O	H_2O
Initial concentration	100%	100%	100%
Net water gain, ml	34	28	32
Condensate appearance			
Level marked on container			
pH of condensate			
Rinsed with			
Solvent Name and Lot No.			
Solvent Name and Lot No.			

538
506
32

SILICA GEL (w/impinger, top off)			
Final weight, grams	526	530	530
Initial weight, grams	520	520	520
Net gain, grams	6	10	10

TOTAL MOISTURE GAIN			
Impingers and silica gel, grams	40	38	42

FILTERS			
Front filter number			
Front filter appearance			
Back filter number			

Traverse Point Locations

Saint Gobain
Furnace #4
Exhaust
EPA 1

Feb. 08 2011
PS
4212
mew

Outer Circumference	Co	in	
Wall thickness	t	in	
INSIDE of FAR WALL to OUTSIDE of Nipple	F	in	43.25
INSIDE of NEAR WALL to OUTSIDE of Nipple	N	in	3
STACK WALL to to OUTSIDE of Nipple	N-t	in	
DOWNstream Disturb	A	in	144.0
UPstream Disturb	B	in	204.0
Inner Diameter	Ds	in	40.25
Area	As	sqin	1272.4
DOWNstream Ratio	A/Ds		3.58
UPstream Ratio	B/Ds		5.07
Minimum #Pts (Particulate)			20
Minimum #Pts/Diameter			10
Minimum #Pts (NON-Particulate)			16
Minimum #Pts/Diameter			8
Actual Points per Diameter			12
Actual Points Used			24

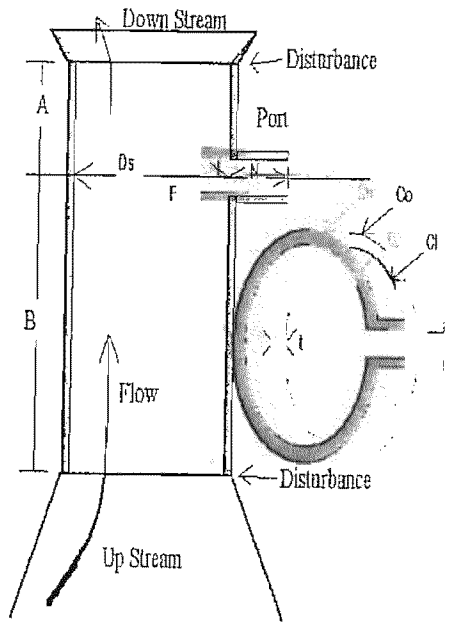

Trav Pt #No	Fract Stk ID (f)	Stack ID (Ds)	Actual Points (Dsxf)	Nearest 8ths (TP)	Adjusted Points (TP)	Traverse Points (TP + N)	Traverse Points (TP + N)
1	2.13%	40.3	0.9	0.875	1	4	4
2	6.70%	40.3	2.7	2.75	2.75	5.75	5 3 / 4
3	11.81%	40.3	4.8	4.75	4.75	7.75	7 3 / 4
4	17.73%	40.3	7.1	7.125	7.125	10.125	10 1 / 8
5	25.00%	40.3	10.1	10.125	10.125	13.125	13 1 / 8
6	35.57%	40.3	14.3	14.375	14.375	17.375	17 3 / 8
7	64.43%	40.3	25.9	25.875	25.875	28.875	28 7 / 8
8	75.00%	40.3	30.2	30.25	30.25	33.25	33 1 / 4
9	82.27%	40.3	33.1	33.125	33.125	36.125	36 1 / 8
10	88.19%	40.3	35.5	35.5	35.5	38.5	38 1 / 2
11	93.30%	40.3	37.6	37.5	37.5	40.5	40 1 / 2
12	97.87%	40.3	39.4	39.375	39.25	42.25	42 1 / 4

Calibration Information

Meter Boxes

Calibration Critical Orifices

Standard Meter

Pitots

Thermocouples and Indicators

Nozzle Diameters (See Furnace 3 Field Data Sheets)

Barometer

Calibration Gas Certificates

Biannual Meterbox Calibration

Method EPA M-5 #7.2
Location Horizon Shop
Meter Box ID 3
Meter ID 6077419
calibrated by PT

Date 1/10/2011
Pb= 30.3 (in Hg)
Ta= 54 (oF)
Tamb 514 (oR)

Leak checks
Negative 0 26 inches Hg
Positive 0 in/min @ 5.5 inches H20

0.97<Y<1.03	Old 7/10/10	New 1/10/11	Change (+/-)	
Y=	0.98261	0.98369	0.1%	pass
dH@=	1.86551	1.80102	-3.6%	

	VAC (in Hg)	Critical Orifice ID	K	dH (InH2O)	Meter (ft3)	Net (ft3)	Field Tdi (oF)	Meter Tdo (oF)	To (oR)	Tm (oR)	Time t (min)	Y	dH@	Y 0.020	dH@ 0.20	Allow. Tolerance
Initial	20	55	0.46322	1.2	526.7	5.4460	56.0	55.0	515.0	516.0	9.00	0.9848	1.7697	0.001	0.03	
Final					532.146		58.0	55.0						pass	pass	
Initial	23	40	0.23886	0.34	532.146	5.9670	58.0	56.0	516.5	517.5	19.00	0.9834	1.8561	0.000	0.06	
Final					538.113		59.0	57.0						pass	pass	
Initial	21.5	48	0.35022	0.69	543.9	5.4970	55.0	54.0	514.5	515.0	12.00	0.9829	1.7773	0.001	0.02	
Final					549.397		56.0	55.0						pass	pass	
												0.9837	1.8010			

ED_000719_00032165-00083

Post Test Meterbox Calibration

Method EPA M-5 #7.2
Location Horizon Shop
Meter Box ID 3
Meter ID
calibrated by MB

Date 2/9/2011
Pb= 30.2 (in Hg)
Ta= 55 (oF)
Tamb 514.7 (oR)

	Biannual 1/10/11	Post-Test 2/9/11	Change (+/-)	
Y=	0.98369	0.98549	0.2%	pass
dH@=	1.80102	1.82310	1.2%	

	VAC (in Hg)	Critical Orifice ID	K	dH (inH2O)	Meter (ft3)	Net (ft3)	Field Tdi (oF)	Meter Tdo (oF)	To (oR)	Tm (oR)	Time t (min)	Y	dH@	Y 0.020	dH@ 0.20	Allow. Tolerance
Initial	18	55	0.45566	1.2	685.7	6.5670	56.0	56.0	516.0	516.5	11.00	0.9822	1.8255	0.003	0.00	
Final					692.267		58.0	56.0						pass	pass	
Initial	18	55	0.45566	1.2	692.267	7.7680	58.0	56.0	516.5	518.0	13.00	0.9842	1.8205	0.001	0.00	
Final					700.035		61.0	57.0						pass	pass	
Initial	18	55	0.45566	1.2	700.035	8.3470	61.0	57.0	518.0	520.0	14.00	0.9901	1.8233	0.005	0.00	
Final					708.382		63.0	59.0						pass	pass	
												0.9855	1.8231			

Biannual Meterbox Calibration

Method	EPA M-5 #7.2
Location	Horizon Shop
Meter Box ID	19
Meter ID	7213329
calibrated by	PT

Date	1/10/2011
Pb=	30.3 (in Hg)
Ta=	54 (oF)
Tamb	514 (oR)

Leak checks

Negative	0 in/min @	27 inches Hg
Positive	0 in/min @	7.1 inches H20

0.97<Y<1.03	Old 7/10/10	New 1/10/11	Change (+/-)	
Y=	0.99962	1.0123	1.3%	pass
dH@=	1.88208	1.8117	-3.9%	

	VAC (in Hg)	Critical Orifice ID	K	dH (inH2O)	Meter (ft3)	Net (ft3)	Field Tdi (oF)	Meter Tdo (oF)	To (oR)	Tm (oR)	Time t (min)	Y	dH@	Y 0.020	dH@ 0.20	Allow. Tolerance
Initial	22	55	0.46322	1.2	173.141	6.5550	58.0	59.0	518.5	518.5	11.00	1.0049	1.8124	0.007	0.00	
Final					179.696		59.0	58.0						pass	pass	
Initial	24	48	0.35022	0.68	179.7	5.3690	59.0	58.0	518.0	518.5	12.00	1.0132	1.8237	0.001	0.01	
Final					185.069		59.0	58.0						pass	pass	
Initial	25	40	0.23886	0.31	185.1	5.1680	59.0	58.0	518.5	519.0	17.00	1.0189	1.7991	0.007	0.01	
Final					190.268		60.0	59.0						pass	pass	
												1.0123	1.8117	0.00372	0.00632	

Post Test Meterbox Calibration

Method	EPA M-5 #7.2
Location	Horizon Shop
Meter Box ID	19
Meter ID	
calibrated by	MB

Date	2/9/2011
Pb=	30.2 (in Hg)
Ta=	55 (oF)
Tamb	514.7 (oR)

	Biannual 1/10/11	Post-Test 2/9/11	Change (+/-)	
Y=	1.01231	1.01513	0.3%	pass
dH@=	1.81173	1.87244	3.2%	

	VAC (in Hg)	Critical Orifice ID	K	dH (inH2O)	Meter (ft3)	Net (ft3)	Field Tdi (oF)	Meter Tdo (oF)	To (oR)	Tm (oR)	Time t (min)	Y	dH@	Y 0.020	dH@ 0.20	Allow. Tolerance
Initial	16	55	0.46322	1.2	539.5	5.8810	54.0	54.0	515.0	515.0	10.00	1.0106	1.8849	0.004	0.01	
Final					545.381		56.0	56.0						pass	pass	
Initial	16	55	0.46322	1.2	545.381	6.4740	56.0	56.0	517.0	518.0	11.00	1.0158	1.8747	0.001	0.00	
Final					551.855		62.0	58.0						pass	pass	
Initial	16	55	0.46322	1.2	551.855	6.4910	62.0	58.0	519.0	521.0	11.00	1.0190	1.8577	0.004	0.01	
Final					558.346		64.0	60.0						pass	pass	
												1.0151	1.8724			

Method EPA M-5 #7.2
Location Horizon Shop
Meter Box 19
Meter ID NA
Calibrated by Busch

Date 2-9-11
Pb= 30.2 (in Hg)
Ta= 55 (oF)

Leak Check
Rate 0.000 / 1 min in/min

	VAC (inHg)	Critical Orifice	K	dH inH2O	Meter (ft3)	Field Tdi (oF)	Meter Tdo (oF)	Time t (min)
Initial	16	55	.46322	1.2	539.500	54	54	10.0
Final					545.381	56	56	
Initial	↓	↓	↓	↓	545.381	56	56	11.0
Final					551.855	62	58	
Initial					551.855	62	58	11.0
Final					558.346	64	60	

*If the box leaks or doesn't calibrate for any reason please let report writer know ASAP and document it.
Be sure to update new K values from annual calibrations when entering data into spreadsheet.
**You must collect at least 5 cuft.
****For post-test calibrations in field (New 10.3.2, Old 5.3.2) Select orifice nearest to operational conditions
Make 3 runs of 5 cuft each.
Comments:

Method EPA M-5 #7.2
Location Horizon Shop
Meter Box # 3
Meter ID NA
Calibrated by Busch

Date 2-9-11
Pb= 30.2 (in Hg)
Ta= 55 (oF)

Leak Check
Rate .000 / 1 min in/min

	VAC (inHg)	Critical Orifice	K	dH inH2O	Meter (ft3)	Field Tdi (oF)	Meter Tdo (oF)	Time t (min)
Initial	18	55	.45566	1.2	685.700	56	56	11.0
Final					692.267	58	56	
Initial	↓	↓	↓	↓	692.267	58	56	13.0
Final					700.035	61	57	
Initial					700.035	61	57	14.0
Final					708.382	63	59	

*If the box leaks or doesn't calibrate for any reason please let report writer know ASAP and document it.
Be sure to update new K values from annual calibrations when entering data into spreadsheet.
**You must collect at least 5 cuft.
****For post-test calibrations in field (New 10.3.2, Old 5.3.2) Select orifice nearest to operational conditions
Make 3 runs of 5 cuft each.
Comments:

Critical Orifice Calibrations

Set	Shop #1
Job #	in house
Date:	12/16/10
DGM (Y) =	0.99733
DGM ID #	standard
Calibrated by:	MB

Horizon Engineering
13585 NE Whitaker Way
Portland, OR 97230
Phone (503) 255-5050
Fax (503) 255-0505
QA/QC MEW

*** Minimum 5 minute Runs ***

Dry Gas Meter			Orifice ID # 73		Orifice ID # 63		Orifice ID # 55		Orifice ID # 48		Orifice ID # 40	
K' Critical Orifice Coefficient			0.82393		0.59635		0.46322		0.35022		0.23886	
	Symbol	Units	Run 1	Run 2	Run 1	Run 2	Run 1	Run 2	Run 1	Run 2	Run 1	Run 2
Initial volume	Vi	ft³	300.150	307.150	315.410	320.410	325.780	329.650	333.950	336.720	344.550	346.520
Final Volume	Vf	ft³	305.950	312.520	319.430	324.430	328.930	332.920	336.330	342.490	346.180	348.570
Difference	Vm	ft³	5.800	5.370	4.020	4.020	3.150	3.270	2.380	5.770	1.630	2.050
Temperatures												
Ambient		°F	59.5	60.5	62.3	62.1	63.4	64.1	64.3	64.5	64.5	65.1
Absolute ambient	Ta	°R	519.2	520.2	522.0	521.8	523.1	523.8	524.0	524.2	524.2	524.8
Initial Inlet	Ti	°F	70.0	74.0	73.0	73.0	71.0	70.0	70.0	69.0	67.0	66.0
Outlet	Tf	°F	58.0	58.0	60.0	60.0	61.0	61.0	61.0	61.0	61.0	61.0
Final Inlet	Ti	°F	74.0	76.0	73.0	73.0	70.0	70.0	69.0	68.0	66.0	67.0
Outlet	Tf	°F	58.0	60.0	60.0	60.0	61.0	61.0	61.0	61.0	61.0	61.0
Avg. Temp	Tm	°R	524.7	526.7	526.2	526.2	525.4	525.2	524.9	524.4	523.4	523.4
Time		min	5	5	5	5	5	5	5	12	5	6
		sec	27	0	11	10	14	25	13	41	15	37
			5.45	5.00	5.18	5.17	5.23	5.42	5.22	12.68	5.25	6.62
Orifice man. rdg	dH@	in H2O	4.300	4.300	2.200	2.200	1.300	1.300	0.710	0.710	0.320	0.320
Barometric. Pressure	Pbar	inHg	30.40	30.40	30.40	30.40	30.40	30.40	30.40	30.40	30.40	30.40
Pump vacuum		inHg	13.0	13.0	15.0	15.0	16.0	16.0	17.0	17.0	18.0	18.0
K' factor			0.82133	0.82652	0.59544	0.59725	0.46227	0.46416	0.35052	0.34992	0.23904	0.23868
K' factor Average				0.82393		0.59635		0.46322		0.35022		0.23886
% Error (+/- 0.5)		%		0.32%		0.15%		0.20%		0.09%		0.08%
Vcr(std)			5.9722	5.5084	4.1068	4.1068	3.2156	3.3397	2.4284	5.8930	1.6664	2.0957
Vm(std)			5.9881	5.5231	4.1178	4.1178	3.2242	3.3486	2.4349	5.9088	1.6708	2.1013
Y			0.9973	0.9973	0.9973	0.9973	0.9973	0.9973	0.9973	0.9973	0.9973	0.9973

Critical Orifice Calibrations

Set	Shop #2
Job #	in house
Date:	12/16/10 12/21/10
DGM (Y) =	0.99733
DGM ID #	standard
Calibrated by:	MB PT

Horizon Engineering
13585 NE Whitaker Way
Portland, OR 97230
Phone (503) 255-5050
Fax (503) 255-0505
QA/QC MEW

*** Minimum 5 minute Runs ***

Dry Gas Meter			Orifice ID # 40		Orifice ID # 48		Orifice ID # 55		Orifice ID # 63		Orifice ID # 73	
K' Critical Orifice Coefficient			0.23845		0.34656		0.45566		0.57854		0.78803	
	Symbol	Units	Run 1	Run 2	Run 1	Run 2	Run 1	Run 2	Run 1	Run 2	Run 1	Run 2
Initial volume	Vi	ft³	349.720	352.650	689.168	691.880	361.020	401.250	407.110	420.910	434.410	441.250
Final Volume	Vf	ft³	352.350	354.230	691.880	695.475	364.250	406.050	420.310	427.620	440.420	446.910
Difference	Vm	ft³	2.630	1.580	2.712	3.595	3.230	4.800	13.200	6.710	6.010	5.660
Temperatures												
Ambient		°F	66.9	64.0	62.0	62.0	66.0	66.7	63.3	60.3	63.1	60.1
Absolute ambient	Ta	°R	526.6	523.7	521.7	521.7	525.7	526.4	523.0	520.0	522.8	519.8
Initial Inlet	Ti	°F	66.0	67.0	67.0	67.0	69.0	71.0	71.0	76.0	80.0	82.0
Outlet	Tf	°F	61.0	61.0	60.0	60.0	62.0	63.0	63.0	64.0	64.0	65.0
Final Inlet	Ti	°F	67.0	67.0	68.0	67.0	71.0	71.0	76.0	76.0	82.0	82.0
Outlet	Tf	°F	61.0	61.0	60.0	60.0	63.0	63.0	64.0	64.0	65.0	65.0
Avg. Temp	Tm	°R	523.4	523.7	523.4	523.2	525.9	526.7	528.2	529.7	532.4	533.2
Time		min	8	5	6	8	5	8	17	8	5	5
		sec	32	5	0	0	27	6	27	50	48	28
			8.53	5.08	6.00	8.00	5.45	8.10	17.45	8.83	5.80	5.47
Orifice man. rdg	dH@	in H2O	0.310	0.310	0.680	0.680	1.300	1.300	2.100	2.100	3.900	3.900
Barometric. Pressure	Pbar	inHg	30.40	30.40	30.00	30.00	30.40	30.40	30.40	30.40	30.40	30.40
Pump vacuum		inHg	18.0	18.0	17.0	17.0	16.0	16.0	15.0	15.0	13.5	13.5
K' factor			0.23783	0.23907	0.34748	0.34563	0.45586	0.45546	0.57898	0.57810	0.79004	0.78602
K' factor Average				0.23845		0.34656		0.45566		0.57854		0.78803
% Error (+/- 0.5)		%		0.26%		0.27%		0.04%		0.08%		0.25%
Vcr(std)			2.6886	1.6144	2.7385	3.6318	3.2941	4.8884	13.4306	6.8079	6.0925	5.7296
Vm(std)			2.6958	1.6188	2.7458	3.6415	3.3030	4.9014	13.4666	6.8261	6.1088	5.7449
Y			0.9973	0.9973	0.9973	0.9973	0.9973	0.9973	0.9973	0.9973	0.9973	0.9973

HORIZON ENGINEERING LLC
13585 N.E. Whitaker Way • Portland, OR 97230
Phone (503)255-5050 • Fax (503)255-0505
www.horizonengineering.com

Standard Meter Calibration
ID # 2299046
Northwest Natural, Gas Meter Division
6/23/10

	NEW METER NUMBER	SIZE	PERF #	NEW ERT#	INDEX READING
SET ☐					
CHANGE ☐	OLD METER NUMBER	SIZE	OLD PERF #	OLD ERT#	OLD INDEX READING
REMOVAL ☐					

SERVICE ADDRESS SPACE OR APT NO. CITY

Horizon Engineering

METER LEFT	EQUIP LEFT	CURB LEFT	CUST VALVE	LOC.	INS.	BS.	BW.	PDL
ON OFF	ON OFF	ON OFF	ON OFF					

GREEN TAG	YELLOW TAG	TIED	NOT TIED	MTR PRESSURE	6.5 INWC @ 130 CFH	2LB	OVER 2LB
YES NO	YES NO						

REMARKS Meter tested at 3 flow rates only.
(meter temp 70.3)

Completed By:

METER SAMPLE 1	WRONG SIZE 2	INDEX IMPAIRED 3	DR 4	METER IMPAIRED 6
ERT DAMAGE 7	LEAK 8	SET WRONG 14	LIQUIDS 15	DEMAND TEST 18
OTHER 19	CORROSION 20	NO USE 21	PCC 24	Unauthorized Gas/Vandalism 27	FIRE 28

F-8735 METER RECORD (Rev 0607) PART 1

ED_000719_00032165-00090

Method: #2 sec 4 WT Location: Whitaker Shop

Pitot	Date Tested	Cp	S	Pitot	Date Tested	Cp	S	Pitot	Date Tested	Cp	S	Pitot	Date Tested	Cp	S
3-1	9/15/2010	0.8152	0.009	3-8	9/15/2010	0.8117	0.007	4-1				4-7	9/28/2010	0.7953	0.009
3-2	9/25/2010	0.8232	0.005	3-9	9/15/2010	0.8351	0.006	4-2	11/8/2010	0.8291	0.003	4-8	9/28/2010	0.8047	0.006
3-3	9/25/2010	0.8290	0.001	3-10	9/25/2010	0.8281	0.002	4-3	1/12/2011	0.8409	0.003	4-9	9/25/2010	0.8393	0.006
3-4	9/15/2010	0.8129	0.003	3-11	9/25/2010	0.8053	0.005	4-4	9/24/2010	0.8218	0.001	4-10			
3-5				3-12	9/15/2010	0.8106	0.005	4-5	9/28/2010	0.8036	0.002	4-11			
3-6				3-13	9/15/2010	0.8031	0.004	4-6	11/8/2010	0.8120	0.006	4-12	9/25/2010	0.8149	0.004
3-7	9/15/2010	0.8273	0.001	3-14	9/15/2010	0.8074	0.004					4-13	9/24/2010	0.8153	0.001

		DpP (P-Type)	DpS (S-Type)	Cp	dS	Ave Cp	S <0.01
MEW	3-1	0.300	0.440	0.8175	0.002	0.8152	0.009
Status	Pass	0.600	0.860	0.8269	0.012		
Date	9/15/2010	0.950	1.450	0.8013	0.014		
Tester	pt						
MEW	3-2	0.340	0.500	0.8164	0.007	0.8232	0.005
Status	Pass	0.590	0.850	0.8248	0.002		
Date	9/25/2010	1.050	1.500	0.8283	0.005		
Tester	ph						
MEW	3-3	0.310	0.440	0.8310	0.002	0.8290	0.001
Status	Pass	0.580	0.830	0.8276	0.001		
Date	9/25/2010	1.050	1.500	0.8283	0.001		
Tester	ph						
MEW	3-4	0.340	0.500	0.8164	0.004	0.8129	0.003
Status	Pass	0.560	0.840	0.8083	0.005		
Date	9/15/2010	0.980	1.450	0.8139	0.001		
Tester	pt						
Status							
Date							
Tester							
Status							
Date							
Tester							
MEW	3-7	0.300	0.430	0.8269	0.000	0.8273	0.001
Status	Pass	0.530	0.760	0.8267	0.001		
Date	9/15/2010	0.980	1.400	0.8283	0.001		
Tester	pt						
MEW	3-8	0.310	0.450	0.8217	0.010	0.8117	0.007
Status	Pass	0.530	0.790	0.8109	0.001		
Date	9/15/2010	0.920	1.400	0.8025	0.009		
Tester	pt						
MEW	3-9	0.320	0.440	0.8443	0.009	0.8351	0.006
Status	Pass	0.580	0.820	0.8326	0.002		
Date	9/15/2010	0.980	1.400	0.8263	0.007		
Tester	pt						
MEW	3-10	0.320	0.460	0.8257	0.002	0.8281	0.002
Status	Pass	0.640	0.910	0.8302	0.002		
Date	9/25/2010	1.050	1.500	0.8283	0.000		
Tester	ph						
MEW	3-11	0.300	0.460	0.7995	0.006	0.8053	0.005
Status	Pass	0.580	0.880	0.8037	0.002		
Date	9/25/2010	0.910	1.350	0.8128	0.007		
Tester	ph						
MEW	3-12	0.320	0.470	0.8169	0.006	0.8106	0.005
Status	Pass	0.560	0.850	0.8036	0.007		
Date	9/15/2010	0.940	1.400	0.8112	0.001		
Tester	pt						
MEW	3-13	0.300	0.450	0.8083	0.005	0.8031	0.004
Status	Pass	0.580	0.880	0.8037	0.001		
Date	9/15/2010	0.940	1.460	0.7971	0.006		
Tester	pt						
MEW	3-14	0.290	0.440	0.8037	0.004	0.8074	0.004
Status	Pass	0.590	0.860	0.8130	0.006		
Date	9/15/2010	0.960	1.460	0.8055	0.002		
Tester	pt						

		DpP (P-Type)	DpS (S-Type)	Cp	dS	Ave Cp	S <0.01
Status							
Date							
Tester							
	4-2	0.280	0.400	0.8283	0.001	0.8291	0.003
Status	Pass	0.650	0.790	0.8260	0.003		
Date	11/8/2010	0.920	1.300	0.8328	0.004		
Tester	PT						
	4-3	0.350	0.490	0.8367	0.004	0.8409	0.003
Status	Pass	0.675	0.930	0.8434	0.003		
Date	1/12/2011	1.050	1.450	0.8425	0.002		
Tester	PTH						
MEW	4-4	0.310	0.450	0.8217	0.000	0.8218	0.001
Status	Pass	0.670	0.970	0.8228	0.001		
Date	9/24/2010	1.100	1.600	0.8209	0.001		
Tester	ph						
	4-5	0.340	0.520	0.8005	0.003	0.8036	0.002
Status	Pass	0.540	0.820	0.8034	0.000		
Date	9/28/2010	0.930	1.400	0.8069	0.003		
Tester	pt						
	4-6	0.330	0.480	0.8209	0.009	0.8120	0.006
Status	Pass	0.620	0.920	0.8127	0.001		
Date	11/8/2010	0.920	1.400	0.8025	0.010		
Tester	PT						
	4-7	0.270	0.420	0.7938	0.002	0.7953	0.009
Status	Pass	0.560	0.840	0.8083	0.013		
Date	9/28/2010	0.940	1.500	0.7837	0.012		
Tester	PT						
	4-8	0.330	0.510	0.7964	0.008	0.8047	0.006
Status	Pass	0.610	0.760	0.8110	0.008		
Date	9/28/2010	0.930	1.400	0.8069	0.002		
Tester	pt						
MEW	4-9	0.270	0.380	0.8346	0.005	0.8393	0.006
Status	Pass	0.520	0.730	0.8356	0.004		
Date	9/25/2010	1.100	1.500	0.8478	0.009		
Tester	ph						
Status							
Date							
Tester							
Status							
Date							
Tester							
MEW	4-12	0.260	0.420	0.8083	0.007	0.8149	0.004
Status	Pass	0.570	0.840	0.8155	0.001		
Date	9/25/2010	1.100	1.600	0.8209	0.006		
Tester	ph						
MEW	4-13	0.320	0.470	0.8169	0.002	0.8153	0.001
Status	Pass	0.650	0.960	0.8146	0.001		
Date	9/24/2010	1.150	1.700	0.8143	0.001		
Tester	ph						
Status							
Date							
Tester							

Method: #2 sec 4 WT Location: Whitaker Shop

Pitot	Date Tested	Cp	S	Pitot	Date Tested	Cp	S	Pitot	Date Tested	Cp	S	Pitot	Date Tested	Cp	S
5-1				5-11	9/14/2010	0.8270	0.004	6-1	9/25/2010	0.8144	0.005	7-5			
5-2				5-12	9/25/2010	0.8368	0.003	6-2	9/16/2010	0.8264	0.002	7-6	9/25/2010	0.8008	0.005
5-3				5-13	9/16/2010	0.8430	0.008	6-3	9/16/2010	0.8100	0.009	7-7	9/24/2010	0.8347	0.004
5-4	9/16/2010	0.8362	0.005	5-14	9/15/2010	0.8310	0.003	6-4				7-8	9/16/2010	0.8148	0.007
5-5	9/25/2010	0.8207	0.005	5-15	9/15/2010	0.8391	0.004	6-5	9/16/2010	0.7997	0.005	7-9	9/16/2010	0.8393	0.003
5-6	9/15/2010	0.8027	0.007	5-16	9/15/2010	0.8125	0.009	6-6	9/25/2010	0.8332	0.003	7-10	9/24/2010	0.8404	0.005
5-7	9/14/2010	0.8402	0.004	5-17				7-1	9/24/2010	0.8198	0.002	7-11	11/12/2010	0.8399	0.003
5-8	9/24/2010	0.8302	0.006	5-18	9/16/2010	0.8306	0.008	7-2	9/25/2010	0.8112	0.0050	7-12	9/16/2010	0.8366	0.001
5-9	9/25/2010	0.8266	0.005	5-19				7-3				Alcoa-1	10/4/10	0.8211	0.003
5-10	9/15/2010	0.8125	0.009					7-4	9/25/2010	0.7953	0.0052	Alcoa-2	10/4/10	0.8367	0.007

		DpP (P-Type)	DpS (S-Type)	Cp	dS	Ave Cp	S <0.01
Status							
Date							
Tester							
Status							
Date							
Tester							
Status							
Date							
Tester							
	5-4	0.320	0.460	0.8348	0.001	0.8362	0.005
Status	Pass	0.620	0.850	0.8455	0.009		
Date	9/16/2010	0.910	1.300	0.8283	0.008		
Tester	pt						
MEW	5-5	0.320	0.470	0.8169	0.004	0.8207	0.005
Status	Pass	0.640	0.940	0.8169	0.004		
Date	9/25/2010	1.050	1.500	0.8263	0.006		
Tester	ph						
MEW	5-6	0.310	0.460	0.8127	0.010	0.8027	0.007
Status	Pass	0.590	0.920	0.7928	0.010		
Date	9/15/2010	0.920	1.400	0.8025	0.000		
Tester	pt						
	5-7	0.360	0.490	0.8466	0.001	0.8402	0.004
Status	Pass	0.690	0.790	0.8556	0.006		
Date	9/14/2010	0.980	1.350	0.8435	0.006		
Tester	pt						
MEW	5-8	0.320	0.450	0.8348	0.005	0.8302	0.006
Status	Pass	0.620	0.900	0.8217	0.008		
Date	9/24/2010	1.100	1.550	0.8340	0.004		
Tester	ph						
MEW	5-9	0.270	0.390	0.8237	0.003	0.8266	0.005
Status	Pass	0.600	0.870	0.8222	0.004		
Date	9/25/2010	1.100	1.550	0.8340	0.007		
Tester	ph						
	5-10	0.280	0.430	0.7989	0.014	0.8125	0.009
Status	Pass	0.560	0.810	0.8232	0.011		
Date	9/15/2010	0.950	1.400	0.8155	0.003		
Tester	pt						
	5-11	0.310	0.440	0.8310	0.003	0.8270	0.004
Status	Pass	0.620	0.880	0.8310	0.003		
Date	9/14/2010	0.930	1.350	0.8217	0.005		
Tester	pt						
MEW	5-12	0.290	0.410	0.8326	0.004	0.8368	0.003
Status	Pass	0.610	0.850	0.8387	0.002		
Date	9/25/2010	0.970	1.350	0.8392	0.002		
Tester	ph						
MEW	5-13	0.310	0.440	0.8310	0.012	0.8430	0.008
Status	Pass	0.570	0.770	0.8518	0.009		
Date	9/16/2010	0.950	1.300	0.8463	0.003		
Tester	pt						
MEW	5-14	0.300	0.430	0.8259	0.004	0.8310	0.003
Status	Pass	0.560	0.790	0.8335	0.003		
Date	9/16/2010	0.990	1.400	0.8325	0.002		
Tester	pt						
MEW	5-15	0.300	0.420	0.8367	0.002	0.8391	0.004
Status	Pass	0.540	0.740	0.8457	0.007		
Date	9/16/2010	0.960	1.350	0.8348	0.004		
Tester	pt						
MEW	5-16	0.280	0.430	0.7989	0.014	0.8125	0.009
Status	Pass	0.560	0.810	0.8232	0.011		
Date	9/15/2010	0.950	1.400	0.8155	0.003		
Tester	pt						
Status							
Date							
Tester							
MEW	5-18	0.300	0.420	0.8367	0.006	0.8306	0.008
Status	Pass	0.640	0.790	0.8185	0.012		
Date	9/15/2010	1.000	1.400	0.8367	0.006		
Tester	pt						
Status							
Date							
Tester							

		DpP (P-Type)	DpS (S-Type)	Cp	dS	Ave Cp	S <0.01
MEW	6-1	0.310	0.460	0.8127	0.002	0.8144	0.005
Status	Pass	0.600	0.870	0.8222	0.008		
Date	9/25/2010	1.000	1.500	0.8083	0.006		
Tester	ph						
MEW	6-2	0.330	0.470	0.8206	0.003	0.8264	0.002
Status	Pass	0.640	0.920	0.8267	0.001		
Date	9/16/2010	0.970	1.400	0.8241	0.002		
Tester	pt						
MEW	6-3	0.330	0.500	0.8043	0.000	0.8100	0.009
Status	Pass	0.590	0.900	0.8016	0.006		
Date	9/16/2010	0.970	1.400	0.8241	0.014		
Tester	pt						
Status							
Date							
Tester							
MEW	6-5	0.340	0.530	0.7929	0.007	0.7997	0.005
Status	pass	0.590	0.800	0.8061	0.009		
Date	9/16/2010	0.980	1.600	0.8002	0.000		
Tester	pt						
MEW	6-6	0.270	0.380	0.8345	0.001	0.8332	0.003
Status	Pass	0.550	0.770	0.8367	0.004		
Date	9/25/2010	0.910	1.300	0.8283	0.005		
Tester	ph						
MEW	7-1	0.310	0.450	0.8217	0.002	0.8198	0.002
Status	Pass	0.640	0.940	0.8169	0.003		
Date	9/24/2010	1.100	1.600	0.8209	0.001		
Tester	ph						
MEW	7-2	0.290	0.440	0.8037	0.007	0.8112	0.005
Status	Pass	0.610	0.900	0.8160	0.004		
Date	9/25/2010	1.050	1.550	0.8148	0.004		
Tester	ph						
Status							
Date							
Tester							
MEW	7-4	0.290	0.460	0.7861	0.009	0.7953	0.006
Status	Pass	0.620	0.960	0.7956	0.000		
Date	9/25/2010	0.990	1.500	0.8043	0.009		
Tester	ph						
Status							
Date							
Tester							
MEW	7-6	0.280	0.430	0.7969	0.002	0.8008	0.005
Status	Pass	0.600	0.900	0.8083	0.008		
Date	9/25/2010	1.000	1.550	0.7952	0.006		
Tester	ph						
MEW	7-7	0.470	0.680	0.8354	0.001	0.8347	0.004
Status	Pass	0.870	0.930	0.8403	0.006		
Date	9/24/2010	1.050	1.600	0.8283	0.006		
Tester	ph						
MEW	7-8	0.300	0.440	0.8175	0.003	0.8148	0.007
Status	Pass	0.580	0.840	0.8226	0.008		
Date	9/16/2010	0.990	1.600	0.8043	0.011		
Tester	pt						
MEW	7-9	0.320	0.450	0.8348	0.004	0.8393	0.003
Status	Pass	0.620	0.720	0.8413	0.002		
Date	9/16/2010	0.940	1.300	0.8418	0.002		
Tester	pt						
MEW	7-10	0.280	0.390	0.8366	0.002	0.8404	0.005
Status	Pass	0.640	0.760	0.8346	0.006		
Date	9/24/2010	1.100	1.500	0.8478	0.007		
Tester	ph						
	7-11	0.445	0.620	0.8387	0.001	0.8399	0.003
Status	Pass	0.880	0.935	0.8443	0.004		
Date	11/12/2010	1.050	1.470	0.8357	0.003		
Tester	JL						
MEW	7-12	0.300	0.420	0.8367	0.000	0.8366	0.001
Status	Pass	0.570	0.800	0.8357	0.001		
Date	9/16/10	0.930	1.300	0.8373	0.001		
Tester	pt						
	Alcoa-1	0.318	0.464	0.8199	0.001	0.8211	0.003
Status	Pass	0.640	0.790	0.8185	0.003		
Date	10/4/10	0.910	1.310	0.8251	0.004		
Tester	JL						
	Alcoa-2	0.335	0.460	0.8448	0.008	0.8367	0.007
Status	Pass	0.610	0.850	0.8367	0.002		
Date	10/4/10	0.820	1.320	0.8265	0.010		
Tester	JL						

Method: #2 sec 4 WT Location: Whitaker Shop

Pitot	Date Tested	Cp	S	Pitot	Date Tested	Cp	S	Pitot	Date Tested	Cp	S	Pitot	Date Tested	Cp	S
3s-1	9/25/2010	0.8387	0.005	6s-4	9/15/2010	0.8376	0.009	7s-1	9/25/2010	0.8289	0.000	SR-36	9/25/2010	0.8200	0.006
3s-2	9/25/2010	0.8324	0.003	6s-1	9/15/2010	0.8257	0.008	8s-2	9/25/2010	0.8382	0.005	SR-48	9/25/2010	0.8128	0.006
3s-3	9/15/2010	0.8322	0.010	6s-2	9/25/2010	0.8297	0.004	10s-1	9/25/2010	0.8280	0.004	SR-48A	9/25/2010	0.8366	0.007
3s-4	9/25/2010	0.8240	0.005	6s-3	9/15/2010	0.8314	0.006	11s-1	9/15/2010	0.8329	0.010				
4s-1	9/15/2010	0.8355	0.008	6s-4	9/15/2010	0.8376	0.003	14s-1	9/15/2010	0.8070	0.002				
5s-1	9/15/2010	0.8205	0.009	6s-5	9/25/2010	0.8280	0.002	14s-2	9/25/2010	0.8032	0.003				
5s-2	9/25/2010	0.8117	0.006	6s-6	9/25/2010	0.8286	0.002	HT-4	11/8/2010	0.8159	0.007				
5s-3	9/15/2010	0.8348	0.002					SR-18	9/25/2010	0.8243	0.006				

		DpP (P-Type)	DpS (S-Type)	Cp	dS	Ave Cp	S <0.01
MEW	3s-1	0.260	0.360	0.8413	0.003	0.8387	0.005
Status	Pass	0.560	0.770	0.8443	0.006		
Date	9/25/2010	0.950	1.350	0.8305	0.008		
Tester	ph						
MEW	3s-2	0.340	0.480	0.833	0.001	0.8324	0.003
Status	Pass	0.670	0.940	0.836	0.003		
Date	9/25/2010	1.050	1.500	0.828	0.004		
Tester	ph						
MEW	3s-3	0.300	0.410	0.847	0.015	0.8322	0.010
Status	Pass	0.580	0.820	0.833	0.000		
Date	9/15/2010	0.920	1.350	0.817	0.015		
Tester	pt						
MEW	3s-4	0.320	0.470	0.817	0.007	0.8240	0.005
Status	Pass	0.600	0.880	0.827	0.003		
Date	9/25/2010	1.050	1.500	0.828	0.004		
Tester	ph						
MEW	4s-1	0.300	0.410	0.8468	0.011	0.8355	0.008
Status	Pass	0.570	0.800	0.8357	0.000		
Date	9/15/2010	0.970	1.400	0.8241	0.011		
Tester	pt						
MEW	5s-1	0.360	0.530	0.8159	0.005	0.8205	0.009
Status	Pass	0.540	0.760	0.8345	0.014		
Date	9/15/2010	0.940	1.400	0.8112	0.009		
Tester	pt						
MEW	5s-2	0.290	0.440	0.8037	0.008	0.8117	0.006
Status	Pass	0.630	0.940	0.8105	0.001		
Date	9/25/2010	1.100	1.600	0.8209	0.009		
Tester	ph						
MEW	5s-3	0.290	0.410	0.8326	0.002	0.8348	0.002
Status	Pass	0.540	0.760	0.8345	0.000		
Date	9/15/2010	0.930	1.300	0.8373	0.003		
Tester	pt						
MEW	6s-4	0.310	0.440	0.8310	0.007	0.8378	0.009
Status	Pass	0.600	0.850	0.8318	0.006		
Date	9/15/2010	0.960	1.300	0.8507	0.013		
Tester	pt						
MEW	6s-1	0.310	0.440	0.8310	0.005	0.8257	0.008
Status	Pass	0.560	0.830	0.8132	0.012		
Date	9/15/2010	0.920	1.300	0.8328	0.007		
Tester	pt						
MEW	6s-2	0.320	0.460	0.8257	0.004	0.8297	0.004
Status	Pass	0.690	0.970	0.8350	0.005		
Date	9/25/2010	1.050	1.500	0.8283	0.001		
Tester	ph						
MEW	6s-3	0.310	0.450	0.8217	0.010	0.8314	0.006
Status	Pass	0.580	0.810	0.8377	0.006		
Date	9/15/2010	0.960	1.350	0.8348	0.003		
Tester	pt						
MEW	6s-4	0.340	0.480	0.8332	0.004	0.8376	0.003
Status	Pass	0.550	0.760	0.8422	0.005		
Date	9/15/2010	0.930	1.300	0.8373	0.000		
Tester	pt						
MEW	6s-5	0.340	0.490	0.8247	0.003	0.8280	0.002
Status	Pass	0.620	0.880	0.8310	0.003		
Date	9/25/2010	1.050	1.500	0.8283	0.000		
Tester	ph						
MEW	6s-6	0.320	0.460	0.8257	0.003	0.8286	0.002
Status	Pass	0.600	0.850	0.8318	0.003		
Date	9/25/2010	1.050	1.500	0.8283	0.000		
Tester	ph						

		DpP (P-Type)	DpS (S-Type)	Cp	dS	Ave Cp	S <0.01
MEW	7s-1	0.330	0.470	0.8296	0.001	0.8289	0.000
Status	Pass	0.610	0.870	0.8290	0.000		
Date	9/25/2010	1.050	1.500	0.8283	0.001		
Tester	ph						
MEW	8s-2	0.350	0.480	0.8454	0.007	0.8382	0.005
Status	Pass	0.500	0.700	0.8367	0.001		
Date	9/25/2010	0.990	1.400	0.8326	0.006		
Tester	ph						
MEW	10s-1	0.300	0.430	0.827	0.001	0.8280	0.004
Status	Pass	0.560	0.810	0.823	0.005		
Date	9/25/2010	1.100	1.550	0.834	0.006		
Tester	ph						
MEW	11s-1	0.340	0.470	0.842	0.009	0.8329	0.010
Status	Pass	0.610	0.850	0.839	0.006		
Date	9/15/2010	0.990	1.450	0.816	0.015		
Tester	pt						
MEW	14s-1	0.300	0.450	0.808	0.001	0.8070	0.002
Status	Pass	0.560	0.840	0.808	0.001		
Date	9/15/2010	0.990	1.500	0.804	0.003		
Tester	pt						
MEW	14s-2	0.320	0.480	0.808	0.005	0.8032	0.003
Status	Pass	0.640	0.980	0.800	0.003		
Date	9/25/2010	0.950	1.450	0.801	0.002		
Tester	ph						
	HT-4	0.265	0.400	0.806	0.010	0.8159	0.007
Status	Pass	0.550	0.810	0.816	0.000		
Date	11/8/2010	0.940	1.350	0.826	0.010		
Tester	pt						
MEW	SR-18	0.320	0.460	0.826	0.001	0.8243	0.006
Status	Pass	0.600	0.850	0.832	0.007		
Date	9/25/2010	0.950	1.400	0.816	0.009		
Tester	ph						
MEW	SR-36	0.330	0.490	0.812	0.008	0.8200	0.006
Status	Pass	0.630	0.920	0.819	0.001		
Date	9/25/2010	1.050	1.500	0.828	0.008		
Tester	ph						
MEW	SR-48	0.310	0.470	0.804	0.009	0.8128	0.006
Status	Pass	0.610	0.890	0.820	0.007		
Date	9/25/2010	1.050	1.550	0.815	0.002		
Tester	ph						
MEW	SR-48A	0.280	0.400	0.828	0.008	0.8366	0.007
Status	Pass	0.610	0.860	0.834	0.003		
Date	9/25/2010	1.100	1.500	0.848	0.011		
Tester	ph						
Status							
Date							
Tester							
Status							
Date							
Tester							

Monitor: Jan		Tester: PT			Location: Horizon Unos					
Thermocouple Indicator	Channel	Ambient Standard, F	Ambient Measured, F	Ambient Difference %	220 +/- Standard, F	220 +/- Measured, F	220 +/- Difference %	400 +/- Standard, F	400 +/- Measured, F	400 +/- Difference %
Meter Box 1	Black	50	48	0.78%	200	197	0.45%	400	396	0.47%
5-Jan-11	Probe	50	45	0.96%	200	196	0.61%	400	395	0.68%
Qa/Qc-MEW	Oven	50	47	0.59%	200	197	0.45%	400	398	0.23%
	Impinger	50	47	0.50%	200	196	0.30%	400	396	0.47%
	Aux	50	48	0.78%	200	197	0.45%	400	396	0.47%
	Meter In	50	47	0.59%	200	197	0.45%	400	397	0.35%
	Meter Out	50	47	0.59%	200	198	0.30%	400	398	0.23%
Meter Box 2	Black	50	48	0.39%	200	199	0.15%	400	397	0.35%
10-Jan-11	Probe	50	47	0.59%	200	198	0.30%	400	399	0.12%
Qa/Qc-MEW	Oven	50	48	0.59%	200	198	0.30%	400	397	0.35%
	Impinger	50	48	0.39%	200	199	0.15%	400	397	0.35%
	Aux	50	48	0.39%	200	199	0.15%	400	398	0.23%
	Meter In	50	50	0.00%	200	201	-0.15%	400	400	0.00%
	Meter Out	50	49	0.20%	200	200	0.00%	400	400	0.00%
Meter Box 3	Black	50	48	0.39%	200	199	0.15%	400	398	0.23%
10-Jan-11	Probe	50	49	0.39%	200	198	0.30%	400	396	0.47%
Qa/Qc-MEW	Oven	50	47	0.59%	200	197	0.45%	400	397	0.35%
	Impinger	50	49	0.20%	200	199	0.15%	400	401	-0.12%
	Aux	50	49	0.20%	200	199	0.15%	400	399	0.12%
	Meter In	50	49	0.20%	200	200	0.00%	400	400	0.00%
	Meter Out	50	49	0.20%	200	200	0.00%	400	400	0.00%
Meter Box 4	Black	75	77	-0.37%	200	202	-0.30%	400	402	-0.23%
10-Jan-11	Probe	75	78	-0.56%	200	204	-0.61%	400	403	-0.35%
Qa/Qc-MEW	Oven	75	78	-0.56%	200	203	-0.45%	400	402	-0.23%
	Impinger	75	76	-0.19%	200	202	-0.30%	400	402	-0.23%
	Meter In	75	77	-0.37%	200	201	-0.15%	400	402	-0.23%
	Meter Out	75	77	-0.37%	200	202	-0.30%	400	401	-0.12%
Meter Box 5	Black	50	49	0.39%	250	248	0.26%	400	398	0.23%
3-Jan-11	Probe	50	47	0.59%	250	247	0.42%	400	397	0.35%
Qa/Qc-MEW	Oven	50	48	0.39%	250	248	0.26%	400	397	0.35%
	Impinger	50	48	0.39%	250	247	0.42%	400	397	0.35%
	Aux	50	48	0.39%	250	248	0.26%	400	398	0.23%
	Meter In	50	49	0.20%	250	249	0.14%	400	398	0.23%
	Meter Out	50	48	0.39%	250	247	0.42%	400	399	0.12%
Meter Box 6	Black	50	48	0.39%	200	198	0.30%	400	398	0.23%
3-Jan-11	Probe	50	50	0.00%	200	199	0.15%	400	398	0.23%
Qa/Qc-MEW	Oven	50	49	0.20%	200	199	0.15%	400	399	0.12%
	Impinger	50	48	0.39%	200	198	0.30%	400	398	0.23%
	Meter In	50	50	0.00%	200	201	-0.15%	400	401	-0.12%
	Meter Out	50	50	0.00%	200	201	-0.15%	400	401	-0.12%
Meter Box 7	Black	50	50	0.00%	200	200	0.00%	400	400	0.00%
3-Jan-11	Probe	50	50	0.00%	200	200	0.00%	400	400	0.00%
Qa/Qc-MEW	Oven	50	52	-0.39%	200	201	-0.15%	400	401	-0.12%
	Impinger	50	50	0.00%	200	200	0.00%	400	400	0.00%
	Aux	50	51	-0.20%	200	200	0.00%	400	399	0.12%
	Meter In	50	52	-0.39%	200	203	-0.46%	400	403	-0.35%
	Meter Out	50	52	-0.39%	200	202	-0.30%	400	402	-0.23%
Meter Box 8	Black	50	49	0.20%	200	199	0.15%	400	399	0.12%
3-Jan-11	Probe	50	52	-0.39%	200	201	-0.15%	400	401	-0.12%
Qa/Qc-MEW	Oven	50	51	-0.20%	200	201	-0.15%	400	400	0.00%
	Impinger	50	49	0.20%	200	200	0.00%	400	399	0.12%
	Aux	50	49	0.20%	200	199	0.15%	400	399	0.12%
	Meter In	50	51	-0.20%	200	201	-0.15%	400	402	-0.23%
	Meter Out	50	51	-0.20%	200	201	-0.15%	400	402	-0.23%
Meter Box 9	Black	50	48	0.39%	200	199	0.15%	400	396	0.47%
3-Jan-11	Probe	50	48	0.39%	200	199	0.15%	400	397	0.35%
Qa/Qc-MEW	Oven	50	48	0.39%	200	199	0.15%	400	397	0.35%
	Impinger	50	48	0.39%	200	199	0.15%	400	396	0.47%
	Aux	50	48	0.39%	200	199	0.15%	400	396	0.47%
	Meter In	50	50	0.00%	200	201	-0.15%	400	400	0.00%
	Meter Out	50	50	0.00%	200	201	-0.15%	400	400	0.00%
Meter Box 10	Black	50	50	0.00%	200	200	0.00%	400	398	0.23%
6-Jan-11	Probe	50	50	0.00%	200	200	0.00%	400	399	0.12%
Qa/Qc-MEW	Oven	50	50	0.00%	200	200	0.00%	400	397	0.35%
	Impinger	50	49	0.20%	200	200	0.00%	400	398	0.23%
	Aux	50	49	0.20%	200	200	0.00%	400	397	0.35%
	Meter In	50	48	0.39%	200	199	0.15%	400	398	0.47%
	Meter Out	50	48	0.39%	200	199	0.15%	400	396	0.47%
Meter Box 11	Black	50	47	0.59%	200	199	0.15%	400	398	0.23%
14-Jan-11	Probe	50	48	0.39%	200	199	0.15%	400	398	0.23%
Qa/Qc-MEW	Oven	50	47	0.59%	200	198	0.30%	400	397	0.35%
	Impinger	50	47	0.59%	200	199	0.15%	400	398	0.23%
	Aux	50	48	0.39%	200	199	0.15%	400	398	0.23%
	Meter In	50	48	0.39%	200	199	0.15%	400	398	0.23%
	Meter Out	50	47	0.59%	200	199	0.15%	400	398	0.23%
Meter Box 13	Black	50	48	0.39%	200	199	0.15%	400	398	0.23%
17-Jan-11	Probe	50	48	0.39%	200	199	0.15%	400	398	0.23%
Qa/Qc-MEW	Oven	50	50	0.00%	200	200	0.00%	400	398	0.23%
	Impinger	50	50	0.00%	200	200	0.00%	400	400	0.00%
	Aux	50	49	0.20%	200	200	0.00%	400	400	0.00%
	Meter In	50	53	-0.59%	200	203	-0.45%	400	403	-0.35%
	Meter Out	50	52	-0.39%	200	203	-0.45%	400	403	-0.35%
Meter Box 14	Black	50	49	0.20%	200	199	0.15%	400	397	0.35%
6-Jan-11	Probe	50	49	0.20%	200	200	0.00%	400	399	0.12%
Qa/Qc-MEW	Oven	50	49	0.20%	200	197	0.45%	400	395	0.58%
	Impinger	50	47	0.59%	200	198	0.30%	400	395	0.47%
	Aux	50	48	0.39%	200	199	0.15%	400	398	0.23%
	Meter In	50	50	0.00%	200	201	-0.15%	400	400	0.00%
	Meter Out	50	50	0.00%	200	201	-0.15%	400	400	0.00%
Liter Meter 15	Probe	50		9.81%	200		30.32%	400		46.53%
	Filter	50		9.81%	200		30.32%	400		46.53%
	Aux 1	50		9.81%	200		30.32%	400		46.53%
	Aux 2	50		9.81%	200		30.32%	400		46.53%
	Meter In	50		9.81%	200		30.32%	400		46.53%
	Meter Out	50		9.81%	200		30.32%	400		46.53%
Liter Meter 16	Probe	50	54	-0.78%	200	202	-0.30%	400	401	-0.12%
11-Feb-11	Filter	50	45	0.78%	200	197	0.45%	400	397	0.35%
Qa/Qc-MEW	Aux 1	50	52	-0.39%	200	202	-0.30%	400	402	-0.23%
	Aux 2	50	51	-0.20%	200	202	-0.30%	400	402	-0.23%
	Meter In	50	50	0.00%	200	201	-0.15%	400	401	-0.12%
	Meter Out	50	51	-0.20%	200	202	-0.30%	400	402	-0.23%
Liter Meter 17	Probe	50	45	0.59%	200	198	0.30%	400	397	0.35%
11-Feb-11	Filter	50	48	0.39%	200	199	0.15%	400	396	0.23%
Qa/Qc-MEW	Aux 1	50	51	-0.20%	200	202	-0.30%	400	402	-0.23%
	Aux 2	50	51	-0.20%	200	202	-0.30%	400	401	-0.12%
	Meter In	50	50	0.00%	200	201	-0.15%	400	401	-0.12%
	Meter Out	50	49	0.20%	200	200	0.00%	400	400	0.00%
Liter Meter 18	Probe	50	45	0.98%	200	196	1.62%	400	391	2.21%
11-Feb-11	Oven	50	49	0.20%	200	197	1.07%	400	393	1.89%
Qa/Qc-MEW	Aux 1	50	51	-0.20%	200	200	0.00%	400	397	0.35%
	Aux 2	50	52	-0.39%	200	203	-0.45%	400	402	-0.23%
	Meter In	50	52	-0.39%	200	203	-0.45%	400	405	-0.68%
	Meter Out	50	51	-0.20%	200	199	0.30%	400	401	-0.12%
Meter Box 19	Black	50	48	0.39%	200	198	0.30%	400	397	0.35%
10-Jan-11	Probe	50	47	0.59%	200	197	0.45%	400	396	0.47%
Qa/Qc-MEW	Oven	50	47	0.59%	200	198	0.30%	400	397	0.35%
	Impinger	50	48	0.39%	200	199	0.15%	400	397	0.35%
	Aux	50	47	0.59%	200	199	0.15%	400	398	0.23%
	Meter In	50	50	0.00%	200	201	-0.15%	400	401	-0.12%
	Meter Out	50	50	0.00%	200	201	-0.15%	400	400	0.00%
Meter Box 20	Black	50	47	0.59%	200	199	0.15%	400	397	0.35%
3-Jan-11	Probe	50	48	0.39%	200	199	0.15%	400	398	0.23%
Qa/Qc-MEW	Oven	50	48	0.39%	200	199	0.15%	400	398	0.23%
	Filter	50	47	0.59%	200	197	0.46%	400	397	0.35%
	Exit	50	49	0.39%	200	198	0.30%	400	397	0.35%
	Aux	50	47	0.59%	200	199	0.15%	400	397	0.35%
	Meter	50	50	0.00%	200	201	-0.15%	400	400	0.00%
Meter Box 21	Black	50	51	-0.20%	200	201	-0.15%	400	401	-0.12%
11-Jan-11	Probe	50	50	0.00%	200	200	0.00%	400	400	0.00%
Qa/Qc-MEW	Oven	50	50	0.00%	200	201	-0.15%	400	401	-0.12%
	Impinger	50	50	0.00%	200	201	-0.15%	400	400	0.00%
	Aux	50	50	0.00%	200	200	0.00%	400	400	0.00%
	Meter	50	53	-0.59%	200	203	-0.45%	400	404	-0.47%

Thermocouple Calibrations

Testers:				Location: Horizon Shop				
	Ambient			Heated				
Meterbox	Standard, F	Measured, F	Difference %	Standard, F	Measured, F	Difference %	Amb.	Heated
1 In	55.0	55.0	0.00%	236.0	233.0	0.43%	pass	pass
1/6/11 Out	55.0	53.0	0.39%	251.0	249.0	0.28%	pass	pass
2 In	55.0	56.0	-0.19%	267.0	263.0	0.55%	pass	pass
1/10/11 Out	55.0	55.0	0.00%	248.0	251.0	-0.42%	pass	pass
3 In	55.0	55.0	0.00%	253.0	248.0	0.70%	pass	pass
1/10/11 Out	55.0	55.0	0.00%	241.0	245.0	-0.57%	pass	pass
4 In	64.0	64.0	0.00%	137.0	137.0	0.00%	pass	pass
1/14/11 Out	64.0	63.0	0.19%	149.0	149.0	0.00%	pass	pass
5 In	59.0	60.0	-0.19%	215.0	213.0	0.30%	pass	pass
1/3/11 Out	59.0	60.0	-0.19%	206.0	207.0	-0.15%	pass	pass
6 In	59.0	60.0	-0.19%	263.0	262.0	0.14%	pass	pass
1/3/11 Out	60.0	62.0	-0.38%	272.0	272.0	0.00%	pass	pass
7 In	59.0	60.0	-0.19%	246.0	247.0	-0.14%	pass	pass
1/3/11 Out	59.0	60.0	-0.19%	244.0	243.0	0.14%	pass	pass
8 In	59.0	60.0	-0.19%	143.0	141.0	0.33%	pass	pass
1/3/11 Out	59.0	60.0	-0.19%	144.0	144.0	0.00%	pass	pass
9 In	58.0	58.0	0.00%	229.0	230.0	-0.15%	pass	pass
1/3/11 Out	58.0	59.0	-0.19%	250.0	251.0	-0.14%	pass	pass
10 In	59.0	59.0	0.00%	367.0	370.0	-0.36%	pass	pass
1/6/11 Out	59.0	59.0	0.00%	367.0	358.0	1.09%	pass	pass
11 In	61.0	62.0	-0.19%	127.0	129.0	-0.34%	pass	pass
1/14/11 Out	61.0	62.0	-0.19%	116.0	115.0	0.17%	pass	pass
12 In			0.00%			0.00%	pass	pass
date Out			0.00%			0.00%	pass	pass
13 In	60.0	61.0	-0.19%	290.0	293.0	-0.40%	pass	pass
1/17/11 Out	60.0	61.0	-0.19%	290.0	289.0	0.13%	pass	pass
14 In	55.0	57.0	-0.39%	253.0	256.0	-0.42%	pass	pass
1/6/11 Out	55.0	54.0	0.19%	246.0	249.0	-0.43%	pass	pass
19 In	57.0	58.0	-0.19%	269.0	271.0	-0.27%	pass	pass
1/10/11 Out	57.0	57.0	0.00%	241.0	239.0	0.29%	pass	pass
20 In	5.0	NA		NA	NA			
1/3/11 Out	59.0	59.0	0.00%	251.0	248.0	0.42%	pass	pass
21 In	NA	NA		NA	NA			
11/11/11 Out	59.0	59.0	0.00%	254.0	252.0	0.28%	pass	pass
	Ambient			Heated				
Liter Meter	Standard, F	Measured, F	Difference %	Standard, F	Measured, F	Difference %	Amb.	Heated
15 In			0.00%			0.00%	pass	pass
date Out			0.00%			0.00%	pass	pass
16 In	58.0	60.0	-0.39%	267.0	268.0	-0.14%	pass	pass
2/2/11 Out	58.0	59.0	-0.19%	263.0	263.0	0.00%	pass	pass
17 In	58.0	59.0	-0.19%	205.0	205.0	0.00%	pass	pass
2/2/11 Out	58.0	59.0	-0.19%	229.0	230.0	-0.15%	pass	pass
18 In	58.0	59.0	-0.19%	230.0	229.0	0.14%	pass	pass
2/2/11 Out	58.0	59.0	-0.19%	231.0	232.0	-0.14%	pass	pass

Thermocouple Calibrations

		Personnel: JL			Location: Horizon Shop					
	Date	Ambient Standard, F	Ambient Measured, F	Ambient Difference %	Heated Standard, F	Heated Measured, F	Heated Difference %	Ice Standard, F	Ice Measured, F	Ice Difference %
Sample Box - impinger out										
I-01	9/18/2010	71.1	71.6	-0.09%	x	x		39.6	41.2	-0.32%
I-02	9/18/2010	71.3	71.8	-0.09%	x	x		43.4	44.6	-0.24%
I-03	9/18/2010	71.3	70.7	0.11%	x	x		36.5	37.4	-0.18%
I-04	9/18/2010	70.1	70.5	-0.08%	x	x		35.6	34.9	0.14%
I-05	9/18/2010	69.9	68.5	0.26%	x	x		45.3	45.3	0.00%
I-06	11/12/2010	60.0	59.0	0.19%	x	x		35.0	33.0	0.40%
I-07	9/18/2010	74.8	73.9	0.17%	x	x		48.6	49.3	-0.14%
I-08	11/12/2010	58.0	59.0	-0.19%	x	x		35.0	35.0	0.00%
I-09	9/18/2010	71.0	70.5	0.09%	x	x		38.3	36.9	0.28%
I-10	9/18/2010	70.9	71.4	-0.09%	x	x		44.9	43.7	0.24%
I-11	9/18/2010	71.0	71.1	-0.02%	x	x		39.8	37.5	0.46%
I-12	9/18/2010	69.8	69.6	0.04%	x	x		48.2	46.7	0.30%
I-13	9/18/2010	70.3	70.5	-0.04%	x	x		39.6	37.9	0.34%
I-14	11/12/2010	57.0	58.0	-0.19%	x	x		34.0	34.0	0.00%
I-15	9/18/2010	71.2	71.9	-0.13%	x	x		41.1	39.6	0.30%
I-16	11/12/2010	57.0	58.0	-0.19%	x	x		34.0	34.0	0.00%
I-17	9/18/2010	71.1	70.9	0.04%	x	x		43.5	45.1	-0.32%
Sample Box - oven										
017	9/18/2010	70.9	70.1	0.15%	262.3	259.7	0.36%	x	x	
018	9/18/2010	71.0	70.4	0.11%	253.7	250.4	0.46%	x	x	
019	9/18/2010	71.3	70.7	0.11%	238.9	240.4	-0.21%	x	x	
020	9/18/2010	69.8	69.3	0.09%	219.8	221.3	-0.22%	x	x	
156	9/18/2010	70.4	69.7	0.13%	223.6	219.8	0.56%	x	x	
172	9/18/2010	75.1	76.1	-0.19%	214.9	214.3	0.09%	x	x	
173	11/12/2010	60.0	59.0	0.19%	245.0	244.0	0.14%	x	x	
184	9/18/2010	71.2	70.1	0.21%	203.8	202.5	0.20%	x	x	
185	11/12/2010	60.0	59.0	0.19%	205.0	205.0	0.00%	x	x	
186	9/18/2010	70.9	70.2	0.13%	215.2	213.9	0.19%	x	x	
187	9/18/2010	71.1	70.5	0.11%	208.6	209.9	-0.19%	x	x	
188	9/18/2010	70.9	70.1	0.15%	263.7	261.4	0.32%	x	x	
189	9/18/2010	70.7	71.3	-0.11%	214.1	215.3	-0.18%	x	x	
190	9/18/2010	70.3	69.5	0.15%	257.6	252.5	0.71%	x	x	
229				0.00%			0.00%	x	x	
230	11/12/2010	60.0	59.0	0.19%	241.0	250.0	-1.28%	x	x	
327	9/18/2010	71.1	70.3	0.15%	205.9	207.3	-0.21%	x	x	
328	11/12/2010	60.0	60.0	0.00%	246.0	243.0	0.43%	x	x	
329	9/18/2010	69.9	69.1	0.15%	233.5	236.1	-0.38%	x	x	
331	9/18/2010	71.3	70.2	0.21%	253.4	256.9	-0.49%	x	x	

Grant Edgel Company
MFG. RED COMET OVENS
4233 N.E. 147th AVENUE ▫ P.O. BOX 20116 ▫ PORTLAND, OREGON 97220
TELEPHONE 254-6524 (AREA CODE 503)

LABORATORY PRIMARY STANDARDS

CERTIFICATE

FOR

Altek Calibrator

Series 22

Serial# 10663701

Submitted By

Horizon Engineering

13585 NE Whittaker Way

Portland, OR 97230

Test	Error	Test	Error
0°F	+.4	300°F	+.6
50°F	+.4	350°F	+.6
100°F	+.4	400°F	+.7
150°F	+.5	450°F	+.6
250°F	+.7	500°F	+.1

Certified By:
Gordon Model
5050 Serial#
10270 Resubmssion
Date: 10-30-10

The accuracy stated on this certificate is traceable to the NATIONAL INSTITUTE OF STANDARDS through certification documents on file in the Metrology Laboratory of the Grant Edgel Company.

Test Conditions

AMBIENT TEMP.: 68°

REL. HUMIDITY: 56%

DATE: 7-1-10

REPORT NO.: 10G-2

SERVICE ORDER: 20756

P.O. NUMBER:

Authorized Signatures

PERFORMED BY: RG

APPROVED BY: Bob Edgel

RESUBMISSION DATE: 7-1-11

A Satisfied Customer is Our First Consideration

Grant Edgel Company
MFG. RED COMET OVENS
TELEPHONE 254-6524 (AREA CODE 503)
4233 N.E. 147TH AVENUE ◊ P.O. BOX 20116 ◊ PORTLAND, OREGON 97220

LABORATORY PRIMARY STANDARDS

CERTIFICATE

FOR

Altek Calibrator

Series 22

Serial# 10400304

Submitted By

Horizon Engineering

13585 NE Whittaker

Portland, OR 97230

Test	Error	Test	Error
0°F	-1.0	300°F	-1.0
50°F	-1.0	350°F	-1.0
100°F	-1.0	400°F	-1.0
150°F	-.9	450°F	-1.1
200°F	-.9	500°F	-1.5

Certified By:
Gordon Model
5050 Serial#
10270 Resubmission
Date 10-30-10

The accuracy stated on this certificate is traceable to the NATIONAL INSTITUTE OF STANDARDS through certification documents on file in the Metrology Laboratory of the Grant Edgel Company.

Test Conditions

AMBIENT TEMP.: 68°

REL. HUMIDITY: 56%

DATE: 7-1-10

REPORT NO.: 10G-3

SERVICE ORDER: 20756

P.O. NUMBER:

Authorized Signatures

PERFORMED BY: RG

APPROVED BY: Bob Edgel

RESUBMISSION DATE: 7-1-11

A Satisfied Customer is Our First Consideration

Grant Edgel Company
MFG. RED COMET OVENS
TELEPHONE 254-6524 (AREA CODE 503)
4233 N.E. 147TH AVENUE ▫ P.O. BOX 20116 ▫ PORTLAND, OREGON 97220

LABORATORY PRIMARY STANDARDS

CERTIFICATE

FOR

Type K Thermocouple

1/4" x 36" w/Q[illegible]

Serial# 200701, 2[illegible]

Submitted By

Horizon Engineerin[illegible]

13585 NE Whittaker Way

Portland, OR 97230

T/C #	32°F	212°F
200701	+.8	-1.4
200901	+.4	-1.1
201001	+.8	-1.3

Certified By: Gordon Model 5050 Serial# 10270
Resubmission Date: 103010

The accuracy stated on this certificate is traceable to the NATIONAL BUREAU OF STANDARDS through certification documents on file in the Metrology Laboratory of the Grant Edgel Company.

Test Conditions

AMBIENT TEMP.: 75°F

REL. HUMIDITY: 59%

DATE: 6-23-10

REPORT NO.: 10F-1

SERVICE ORDER: 20748

P.O. NUMBER:

Authorized Signatures

PERFORMED BY: RG

APPROVED BY: Bob Edgel

RESUBMISSION DATE: 6-23-11

A Satisfied Customer is Our First Consideration

Grant Edgel Company
MFG. RED COMET OVENS
TELEPHONE 254-6524 (AREA CODE 503)
4233 N.E. 147TH AVENUE ▫ P.O. BOX 20116 ▫ PORTLAND, OREGON 97220

LABORATORY PRIMARY STANDARDS

CERTIFICATE

FOR

Type K Thermocouple

1/4" x 36"w/plug Serl# 200702, 200902

1/8" x 3"w/plug Serl# 200602

Submitted By

Horizon Engineering

13585 NE Whittaker Way

Portland, OR 97230

T/C #	32°F	212°F
200602	+.5	-1.9
200702	+1.5	-1.6
200902	+1.7	-2.2

Certified By: Gordon Model 5050 Serial# 10270
Resubmission Date: 10-30-10

The accuracy stated on this certificate is traceable to the NATIONAL INSTITUTE OF STANDARDS through certification documents on file in the Metrology Laboratory of the Grant Edgel Company.

Test Conditions

AMBIENT TEMP.: 68°F

REL. HUMIDITY: 56%

DATE: 7-1-10

REPORT NO.: 10G-1

SERVICE ORDER: 20756

P.O. NUMBER:

Authorized Signatures

PERFORMED BY: RG

APPROVED BY: Bob Edgel

RESUBMISSION DATE: 7-1-11

A Satisfied Customer is Our First Consideration

Grant Edgel Company
MFG. RED COMET OVENS
TELEPHONE 254-6524 (AREA CODE 503)
4233 N.E. 147TH AVENUE ◊ P.O. BOX 20116 ◊ PORTLAND, OREGON 97220

LABORATORY PRIMARY STANDARDS

CERTIFICATE

FOR

Fluke Digital

Model 52

Serial# 607521

Submitted By

Horizon Engineering

13585 NE Whittaker Way

Portland, OR 97230

Test	Error T1	Error T2
100°F	-0.2	+0.4
300°F	+0.6	+1.4
500°F	+0.0	+0.6
800°F	-0.3	+0.4
1000°F	+0.2	+0.8

Certified By:
Gordon Model5050
Serial# 10270
Resubmission Date:
10/30/10

The accuracy stated on this certificate is traceable to the NATIONAL INSTITUTE OF STANDARDS through certification documents on file in the Metrology Laboratory of the Grant Edgel Company.

Test Conditions

AMBIENT TEMP.: 65°F

REL. HUMIDITY: 45%

DATE: 3/19/10

REPORT NO.: 10C-1

SERVICE ORDER: 20701

P.O. NUMBER:

Authorized Signatures

PERFORMED BY: RG

APPROVED BY: Bob Edgel

RESUBMISSION DATE: 3/19/11

A Satisfied Customer is Our First Consideration

ED_000719_00032165-00101

HORIZON ENGINEERING LLC
13585 NE Whitaker Way • Portland, OR 97230
Phone (503) 255-5050 • Fax (503) 255-0505
www.horizonengineering.com

January 12, 2010
Horizon Engineering Shop
Barometer Calibration

National Weather Service (PDX Int'l Airport)	29.82"Hg
TV 1	30.0"Hg
TV 2	29.8"Hg
TV 3	29.8"Hg
TV 4	30.0"Hg
Shop	30.1"Hg
Shortridge #1	30.1"Hg
Shortridge #2	30.0"Hg
Shortridge #3	29.8"Hg
Paul Heffernan's personal wrist barometer	29.8"Hg

All pressures are absolute, read at the Horizon Engineering shop.
Margery P. Heffernan

Liquid Technology Corporation

Industry Leader in Specialty Gases, Equipment and Service

Certificate of Analysis

- EPA PROTOCOL GAS -

CC-251832
R-M420

Customer	Am Test - Air Quality (Preston, WA)
Date	July 29, 2009
Delivery Receipt	DR-25475
Gas Standard	945.0 ppm CO, 22.00% CO2, 22.00% Oxygen/Nitrogen
Final Analysis Date	July 29, 2009
Expiration Date	July 29, 2012

Component	Carbon Monoxide, Carbon Dioxide, Oxygen
Balance Gas	Nitrogen

Analytical Data: **DO NOT USE BELOW 150 psig**

PA Protocol, Section No. 2.2, Procedure G-1

Reported Concentrations

Carbon Monoxide: 981.1 ppm +/- 9.8 ppm

Carbon Dioxide: 21.23% +/- 0.21%

Oxygen: 22.22% +/- 0.22%

Nitrogen: Balance

Reference Standards:

SRM/GMIS:	GMIS	GMAS/GMIS	GMIS
Cylinder Number:	CC-251970	CC-115915/CC-158974	CC-85458
Concentration:	1003.2 ppm CO	19.4% CO2/39.86% CO2	20.97% Oxygen
Expiration Date:	11/12/10	01/21/11 - 03/17/10	04/15/11

Certification Instrumentation

Component:	Carbon Monoxide	Carbon Dioxide	Oxygen
Make/Model:	Nicolet - Nexus 470	HP5890II	Servomex 244a
Serial Number:	AEP99000154	3336A59393	1847
Principal of Measurement:	FTIR	TCD	Paramagnetic
Last Calibration:	July 02, 2009	July 07, 2009	July 01, 2009

Cylinder Data

Cylinder Serial Number:	CC-251832	Cylinder Outlet:	CGA 590
Cylinder Volume:	140 Cubic Feet	Cylinder Pressure:	2000 psig, 70°F

Analytical Uncertainty and NIST Traceability are in compliance with EPA-600/R-97/121.

Certified by: Mike Duncan

Mike Duncan

Unmatched Excellence

2564 Pemberton Drive ~ Apopka, Florida 32703 ~ Phone (407)-292-2990 ~ Fax (407)-292-3313
~ www.liquidtechcorp.com ~

Liquid Technology Corporation

Industry Leader in Specialty Gases, Equipment and Service

EB-0017560

R Mix 26-AmT

Certificate of Analysis

- EPA PROTOCOL GAS -

Customer	Am Test - Air Quality (Preston, WA)
Date	October 22, 2009
Delivery Rebeipt	DR-26472
Gas Standard	440.0 - 495.0 ppm CO, 12.00% CO2, 12.00% Oxygen/Nitrogen
Final Analysis Date	October 22, 2009
Expiration Date	October 22, 2012

Component	Carbon Monoxide, Carbon Dioxide, Oxygen
Balance Gas	Nitrogen

Analytical Data:

DO NOT USE BELOW 150 psig

PA Protocol, Section No. 2.2, Procedure G-1

Reported Concentrations

Carbon Monoxide: 480.8 ppm +/- 4.8 ppm

Carbon Dioxide: 12.05% +/- 0.12%

Oxygen: 12.02% +/- 0.12%

Nitrogen: Balance

Reference Standards:

SRM/GMIS:	GMIS	GMIS/GMIS	GMIS/GMIS
Cylinder Number:	CC-166528	CC-159114/CC-125534	CC-166423/CC-85458
Concentration:	496.3 ppm CO	7.20% CO2/13.31% CO2	10.10% O2/20.97% Oxygen
Expiration Date:	04/06/11	08/26/10 - 01/28/11	03/04/11 - 04/15/11

Certification Instrumentation

Component:	Carbon Monoxide	Carbon Dioxide	Oxygen
Make/Model:	Nicolet - Nexus 470	Agilent 7890A	Servomex 244a
Serial Number:	AEP99000154	CN10736166	1847
Principal of Measurement:	FTIR	GC-TCD	Paramagnetic
Last Calibration:	October 06, 2009	September 23, 2009	October 22, 2009

Cylinder Data

Cylinder Serial Number:	EB-0017560	Cylinder Outlet:	CGA 590
Cylinder Volume:	140 Cubic Feet	Cylinder Pressure:	2000 psig, 70°F

Analytical Uncertainty and NIST Traceability are in compliance with EPA-600/R-97/121.

Certified by: Mike Duncan

Mike Duncan

Unmatched Excellence

2564 Pemberton Drive ~ Apopka, Florida 32703 ~ Phone (407)-292-2990 ~ Fax (407)-292-3313
~ www.liquidtechcorp.com ~

Liquid Technology Corporation

Industry Leader in Specialty Gases, Equipment and Service

Certificate of Analysis

CC 92945

- EPA PROTOCOL GAS -

R-Mix 28-AmT

Customer	Am Test - Air Quality (Preston, WA)
Date	October 01, 2009
Delivery Receipt	DR-26337
Gas Standard	900-995 ppm NO, 900-995 ppm SO2, 900-995 ppm CO/N2-EPA PROTOCOL
Final Analysis Date	September 30, 2009
Expiration Date	September 30, 2011

DO NOT USE BELOW 150 psig

Analytical Data:

EPA Protocol, Section No. 2.2, Procedure G-1.

Reported Concentrations:

Nitric Oxide: 967.8 ppm +/- 9.6 ppm

Sulfur Dioxide: 936.1 ppm +/- 9.3 ppm

Carbon Monoxide: 979.8 ppm +/- 9.7 ppm

Nitrogen: Balance

Total NOx: 968.0 ppm

**** NOx for Reference Use Only ****

Reference Standards

SRM/GMIS/NTRM:	GMIS	GMIS/GMIS	GMIS/GMIS
Cylinder Number:	CC-100805	CC-115955/CC-159050	CC-251967/CC-251970
Concentration:	803.2 ppm NO	758.3/1472.7 ppm SO2/N2	769.5 ppm CO/1003.2 ppm CO
Expiration Date:	11/12/10	05/05/11 - 06/27/10	11/10/10 - 11/12/10

Certification Instrumentation

Component:	Nitric Oxide	Sulfur Dioxide	Carbon Monoxide
Make/Model:	NEXUS-470	NEXUS-470	NEXUS-470
Serial Number:	AEP99000154	AEP99000154	AEP99000154
Principal of Measurement:	FTIR	FTIR	FTIR
Last Calibration:	September 22, 2009	September 22, 2009	September 22, 2009

Cylinder Data

Cylinder Number:	CC-92945	Cylinder Volume:	140 Cubic Feet
Cylinder Outlet:	CGA 660	Cylinder Pressure:	2000 psig, 70F
Expiration Date:	September 30, 2011		

Analytical Uncertainty and NIST Traceability are in compliance with EPA-600/R-97/121.

Certified by: Mike Duncan

Mike Duncan

Unmatched Excellence

98

2564 Pemberton Drive ~ Apopka, Florida 32703 ~ Phone (407)-292-2990 ~ Fax (407)-292-3313
~ www.liquidtechcorp.com ~

Liquid Technology Corporation

Industry Leader in Specialty Gases, Equipment and Service

Certificate of Analysis

CC 184264

- EPA PROTOCOL GAS -

R-Mix29-AmT

Customer	Am Test - Air Quality (Preston, WA)
Date	July 15, 2009
Delivery Receipt	DR-25378
Gas Standard	25.0 ppm NO, 25.0 ppm SO2, 25.0 ppm CO/N2-EPA PROTOCOL
Final Analysis Date	July 13, 2009
Expiration Date	July 13, 2011

DO NOT USE BELOW 150 psig

Analytical Data:

EPA Protocol, Section No. 2.2, Procedure G-1.

Reported Concentrations:

Nitric Oxide: 24.5 ppm +/- 0.24 ppm

Sulfur Dioxide: 25.7 ppm +/- 0.25 ppm

Carbon Monoxide: 25.2 ppm +/- 0.25 ppm

Nitrogen: Balance

Total NOx: 24.5 ppm

**** NOx for Reference Use Only ****

Reference Standards

SRM/GMIS:	GMIS	GMIS	GMIS
Cylinder Number:	CC-79739	CC-125502	CC-158976
Concentration:	24.5 ppm NO/N2	25.8 ppm SO2/N2	25.1 ppm CO/N2
Expiration Date:	01/20/11	07/29/10	08/04/10

Certification Instrumentation

Component:	Nitric Oxide	Sulfur Dioxide	Carbon Monoxide
Make/Model:	NEXUS-470	NEXUS-470	NEXUS-470
Serial Number:	AEP99000154	AEP99000154	AEP99000154
Principal of Measurement:	FTIR	FTIR	FTIR
Last Calibration:	July 04, 2009	July 02, 2009	July 02, 2009

Cylinder Data

Cylinder Number:	CC-184264	Cylinder Volume:	140 Cubic Feet
Cylinder Outlet:	CGA 660	Cylinder Pressure:	2000 psig, 70°F
Expiration Date:	July 13, 2011		

Analytical Uncertainty and NIST Traceability are in compliance with EPA-600/R-97/121.

Certified by: Mike Duncan

Mike Duncan

Unmatched Excellence

2564 Pemberton Drive ~ Apopka, Florida 32703 ~ Phone (407)-292-2990 ~ Fax (407)-292-3313
~ www.liquidtechcorp.com ~

Liquid Technology Corporation

Industry Leader in Specialty Gases, Equipment and Service

CC 310802

Certificate of Analysis

- EPA PROTOCOL GAS -

B-Mix30-AmT

Customer	Am Test - Air Quality (Preston, WA)
Date	April 14, 2009
Delivery Receipt	DR-24472
Gas Standard	490.0 ppm NO, 490.0 ppm SO2, 490.0 ppm CO/N2-EPA PROTOCOL
Final Analysis Date	April 09, 2009
Expiration Date	April 09, 2011

DO NOT USE BELOW 150 psig

Analytical Data:

EPA Protocol, Section No. 2.2, Procedure G-1.

Reported Concentrations:

Nitric Oxide: 527.4 ppm +/- 5.2 ppm

Sulfur Dioxide: 482.2 ppm +/- 4.8 ppm

Carbon Monoxide: 492.8 ppm +/- 4.9 ppm

Nitrogen: Balance

Total NOx: 527.4 ppm

**** NOx for Reference Use Only ****

Reference Standards

SRM/GMIS:	GMIS/GMIS	GMIS/GMIS	GMIS
Cylinder Number:	CC-158975/CC-166610	CC-125502/CC-56859	CC-166528
Concentration:	437.5 ppm/748.2 ppm NO	387.7/717.2 ppm SO2/N2	496.3 ppm CO/N2
Expiration Date:	11/14/08 - 07/24/10	04/08/10 - 10/18/10	04/06/11

Certification Instrumentation

Component:	Nitric Oxide	Sulfur Dioxide	Carbon Monoxide
Make/Model:	NEXUS-470	NEXUS-470	NEXUS-470
Serial Number:	AEP99000154	AEP99000154	AEP99000154
Principal of Measurement:	FTIR	FTIR	FTIR
Last Calibration:	April 02, 2009	April 02, 2009	April 03, 2009

Cylinder Data

Cylinder Number:	CC-310802	Cylinder Volume:	140 Cubic Feet
Cylinder Outlet:	CGA 660	Cylinder Pressure:	2000 psig, 70°F
Expiration Date:	April 09, 2011		

Analytical Uncertainty and NIST Traceability are in compliance with EPA-600/R-97/121.

Certified by:

Date: April 14, 2009

Unmatched Excellence

2564 Pemberton Drive ~ Apopka, Florida 32703 ~ Phone (407)-292-2990 ~ Fax (407)-292-3313
~ www.liquidtechcorp.com ~

Liquid Technology Corporation

Industry Leader in Specialty Gases, Equipment and Service

Certificate of Analysis

EB 0014555

- EPA PROTOCOL GAS -

R-Mix 31-AmT

Customer	Am Test - Air Quality (Preston, WA)
Date	June 11, 2009
Delivery Receipt	DR-25026
Gas Standard	47.5 ppm NO, 47.5 ppm SO2, 47.5 ppm CO/N2-EPA PROTOCOL
Final Analysis Date	June 08, 2009
Expiration Date	June 08, 2011

DO NOT USE BELOW 150 psig

Analytical Data:
EPA Protocol, Section No. 2.2, Procedure G-1.

Reported Concentrations:
Nitric Oxide: 46.9 ppm +/- 0.46 ppm
Sulfur Dioxide: 48.5 ppm +/- 0.48 ppm
Carbon Monoxide: 47.5 ppm +/- 0.47 ppm
Nitrogen: Balance
Total NOx: 46.9 ppm
**** NOx for Reference Use Only ****

Reference Standards

SRM/GMIS:	GMIS	GMIS	GMIS
Cylinder Number:	CC-159052	CC-231494	CC-166617
Concentration:	50.6 ppm NO/N2	50.87 ppm SO2/N2	51.0 ppm CO/N2
Expiration Date:	09/18/10	01/28/11	09/18/10

Certification Instrumentation

Component:	Nitric Oxide	Sulfur Dioxide	Carbon Monoxide
Make/Model:	NEXUS-470	NEXUS-470	NEXUS-470
Serial Number:	AEP99000154	AEP99000154	AEP99000154
Principal of Measurement:	FTIR	FTIR	FTIR
Last Calibration:	June 02, 2009	June 03, 2009	June 04, 2009

Cylinder Data

Cylinder Number:	EB-0014555	Cylinder Volume:	140 Cubic Feet
Cylinder Outlet:	CGA 660	Cylinder Pressure:	2000 psig, 70°F
Expiration Date:	June 08, 2011		

Analytical Uncertainty and NIST Traceability are in compliance with EPA-600/R-97/121.

Certified by: Mike Duncan

Mike Duncan

Unmatched Excellence

2564 Pemberton Drive ~ Apopka, Florida 32703 ~ Phone (407)-292-2990 ~ Fax (407)-292-3313
~ www.liquidtechcorp.com ~

QA/QC Documentation

Procedures

NO_x Analyzer Converter Efficiency Data

Analyzer Interference Response Data

Introduction The QA procedures outlined in the U. S. Environmental Protection Agency (EPA) test methods are followed, including procedures, equipment specifications, calibrations, sample extraction and handling, calculations, and performance tolerances. Many of the checks performed have been cited in the Sampling section of the report text. The results of those checks are on the applicable field data sheets in the Appendix.

Continuous Analyzer Methods Field crews operate the continuous analyzers according to the test method requirements, and Horizon's additional specifications. On site quality control procedures include:

- Analyzer calibration error before initial run and after a failed system bias or drift test (within ± 2.0% of the calibration span of the analyzer for the low, mid, and high-level gases or 0.5 ppmv absolute difference)
- System bias at low-scale (zero) and upscale calibration gases (within ± 5.0% of the calibration span or 0.5 ppmv absolute difference)
- Drift check (within ±3.0% of calibration span for low, and mid or high-level gases, or 0.5 ppmv absolute difference)
- System response time (during initial sampling system bias test)
- Checks performed with EPA Protocol 1 or NIST traceable gases
- Leak free sampling system
- Data acquisition systems record 10-second data points or one-minute averages of one second readings
- NO_2 to NO conversion efficiency (before each test)
- Purge time (≥ 2 times system response time and will be done before starting run 1, whenever the gas probe is removed and re-inserted into the stack, and after bias checks)
- Sample time (at least two times the system response time at each sample point)
- Sample flow rate (within approximately 10% of the flow rate established during system response time check)
- Interference checks for analyzers used will be included in the final test report
- Average concentration (run average ≤ calibration span for each run)
- Stratification test (to be done during run 1 at three(3) or twelve(12) points according to EPA Method 7E; Method 3A, if done for molecular weight only, will be sampled near the centroid of the exhaust; stratification is check not normally applicable for RATAs)

Manual Equipment QC Procedures On site quality control procedures include pre- and post-test leak checks on trains and pitot systems. If pre-test checks indicate problems, the system is fixed and rechecked before starting testing. If post-test leak checks are not acceptable, the test run is voided and the run is repeated. Thermocouples and readouts are verified in the field to read ambient prior to the start of any heating or cooling devices.

Sample Handling Samples taken during testing are handled to prevent contamination from other runs and ambient conditions. Sample containers are glass, Teflon™, or polystyrene (filter petri dishes) and are pre-cleaned by the laboratory and in the Horizon Engineering shop. Sample levels are marked on containers and are verified by the laboratory. All particulate sample containers are kept upright and are delivered to the laboratory by Horizon personnel.

Data Processing Personnel performing data processing double-check that data entry and calculations are correct. Results include corrections for field blanks and analyzer drift. Any abnormal values are verified with testing personnel and the laboratory, if necessary.

After results are obtained, the data processing supervisor validates the data with the following actions:

- verify data entry
- check for variability within replicate runs
- account for variability that is not within performance goals (check the method, testing, and operation of the plant)
- verify field quality checks

Equipment Calibrations Periodic calibrations are performed on each piece of measurement equipment according to manufacturers' specifications and applicable test method requirements. The Oregon Department of Environmental Quality (ODEQ) Source Testing Calibration Requirements sheet is used as a guideline. Calibrations are performed using primary standard references and calibration curves where applicable.

Dry Gas Meters Dry gas meters used in the manual sampling trains are calibrated at three rates using a standard dry gas meter that is never taken into the field. The standard meter is calibration verified by the Northwest Natural Gas meter shop once every year. Dry gas meters are post-test calibrated with documentation provided in test reports.

Thermocouples Sample box oven and impinger outlet thermocouples are calibration checked against an NIST traceable thermocouple and indicator system every six months at three points. Thermocouple indicators and temperature controllers are checked using a NIST traceable signal generator. Readouts are checked over their usable range and are adjusted if necessary (which is very unusual). Probe thermocouples are calibrated in the field using the ALT-011 alternate Method 2 calibration procedure, which is documented on the field data sheet for the first run the probe thermocouple was used.

Pitots Every six months, S-type pitots are calibrated in a wind tunnel at three points against a standard pitot using inclined manometers. They are examined for dents and distortion to the alignment, angles, lengths, and proximity to thermocouples before each test. Pitots are protected with covers during storage and handling until they are ready to be inserted in the sample ports.

Nozzles Nozzles are checked for nicks or dents and are measured on three diameters twice each year. Nozzles are also commonly calibrated in the field by taking the average of three consecutive diameter measurements as well as checking for nicks and dents. These field calibrations will be recorded on the field data sheet for the first run the nozzle was used.

NO_2 TO NO CONVERTER EFFICIENCY TEST
Horizon Engineering, LLC

Analyzer ID:	299
Analyzer Model:	Thermo Environmental Instruments, Inc. Model 42i
Converter Type:	Molybdenum Converter @ 625 degrees C
Date:	September 24, 2010
Operator:	TAR
Calibration Gas ID:	EB-0016739
Procedure:	Method 7E, Section 8.2.4.1

Measured Concentration (C_{dir})	47.7 ppm
Certified Concentration of Calibration Gas (C_v)	52.2 ppm

$$\frac{C_{dir}\text{ (measured concentration)}}{C_v\text{ (certified concentration)}} \times 100 = \text{\% conversion efficiency}$$

$$\frac{47.7}{52.2} \times 100 = \mathbf{91.4}\text{ \% efficiency}$$

Method 7E Requirement, Section 8.2.4.1 **90** % efficiency

HORIZON ENGINEERING LLC
13585 NE Whitaker Way • Portland, OR 97230
Phone (503) 255-5050 • Fax (503) 255-0505
www.horizonengineering.com

INTERFERENCE RESPONSE TEST

Date of Test: 3/07/02 Name: Tim Hertel
Analyzer: Type / Model: O_2 / Servomex 1400 Serial Number: 000013

Results:

Test Gas	Concentration, ppmv or %	Analyzer Output Response, %	% of Span (25 %)
SO_2	170.3 ppmv	0.0	0
*CO_2	10%	0.0	0
**CO	512 ppmv	0.0	0

*Used bottle of CO_2 at 100% concentration and diluted it with 100% N2 to get a concentration of about 10% CO_2.

** Used CO cylinder with 5% concentration and diluted it with 100% N_2 to get a concentration of about 500 ppmv CO.

Bias Check:

Test Gas	Concentration, %	Analyzer Output Response, %	Bias Check (%)
O_2	20.95	20.9	0.2

Performance Specifications:

Analyzer	EPA Ref. Method	Allowable Interference (% of analyzer span)	Gas Values To Introduce Into Analyzers (EPA Method 20)
SO_2	6C	7%	200±20 ppm
O_2	6C	7%	20.9±1 percent
CO_2	6C	7%	10±1 percent
CO	20	2%	500±50 ppm

Note: Concentration for SO_2 was slightly lower than listed; 170.3 ppmv was the closest concentration cylinder available at the time of the interference checks.

HORIZON ENGINEERING LLC

13585 NE Whitaker Way • Portland, OR 97230
Phone (503) 255-5050 • Fax (503) 255-0505
www.horizonengineering.com

INTERFERENCE RESPONSE TEST

Date of Test: 3/01 & 3/07/2002 Name: Tim Hertel
Analyzer: Type / Model: CO_2 / Servomex 1440 Serial Number: 000166

Results:

Test Gas	Concentration, ppmv or %	Analyzer Output Response, %	% of Span (25 %)
SO_2	170.3 ppmv	0.0	0.0
O_2	20.95%	0.0	0.0
*CO	534 ppmv	0.0	0.0

* Used CO cylinder with 5% concentration and diluted it with 100% N_2 to get a concentration of about 500 ppmv CO.

Bias Check:

Test Gas	Concentration, %	Analyzer Output Response, %	Bias Check (%)
**CO_2	10.3	10.3	0.0

** Used bottle of CO_2 at 100% concentration and diluted it with 100% N_2 to get a concentration of about 10% CO_2.

Performance Specifications:

Analyzer	EPA Ref. Method	Allowable Interference (% of analyzer span)	Gas Values To Introduce Into Analyzers (EPA Method 20)
SO_2	6C	7%	200±20 ppm
O_2	6C	7%	20.9±1 percent
CO_2	6C	7%	10±1 percent
CO	20	2%	500±50 ppm

Note: Concentration for SO_2 was slightly lower than listed; 170.3 ppmv was the closest concentration cylinder available at the time of the interference checks.

7E-4 Interference Response

Date of Test	9/29/2007
Analyzer Type	Thermo
Model No	42I-HL
Serial Number	[redacted]
CleanAir Asset#	CleanAir
Instrument Range	100.00 ppm
Span Cal Response	90 ppm
Zero Cal Response	0.00 ppm
2.5% of Calibration Span	2.25 ppm
Tester	Art Dean

Test Location: CleanAir
500 West Wood St.
Palatine, IL 60067

You may introduce the appropriate interference test gasses into the analyzer separately or as mixtures.
This test must be performed both with and without NOX.
Interferences are gasses that are potentially encountered during a test.
The total interference response must not be greater than 2.5% of the calibration span for the analyzer tested.

Gas Mixture

Test Gas Type	Conc/Unit	Analyzer Response	Absolute Error
NO	13.50 ppm	NA	NA
NO2	15.24 ppm	NA	NA
HCL	9.32 ppm	90.00	0.00%
H2	44.64 ppm	90.00	0.00%
SO2	17.21 ppm	90.50	0.56%
CH4	44.17 ppm	90.00	0.00%
NH3	8.73 ppm	90.00	0.00%
CO	44.79 ppm	90.00	0.00%
N2O	8.91 ppm	90.00	0.00%
CO2 High	15.17 %	89.30	0.78%
CO2 Low	4.45 %	89.30	0.78%
H2O	1.27 %	89.00	0.16%
Expected Reading w/H2O		88.36	

Gasses / Separately

Test Gas Type	Conc/Unit	Analyzer Response	Absolute Error
NO	15.15 ppm	NA	NA
NO2	17.1 ppm	NA	NA
HCL	10.46 ppm	0.12	0.13%
H2	50.1 ppm	0.00	0.00%
SO2	19.31 ppm	0.40	0.44%
CH4	49.57 ppm	0.00	0.00%
NH3	9.8 ppm	0.00	0.00%
CO	50.27 ppm	0.00	0.00%
N2O	10 ppm	0.00	0.00%
CO2 High	17.02 %	0.00	0.00%
CO2 Low	4.99 %	0.00	0.00%
H2O	1.27 %	0.00	0.00%

Gas Type	Conc / Unit	Cylinder #
NO	15.15 ppm	AAL20914
NO2	17.1 ppm	1L1652
HCL	10.46 ppm	NA25733
H2	50.1 ppm	ALM52896
SO2	19.31 ppm	ALM46049
CH4	49.57 ppm	AAL21367
NH3	9.80 ppm	ALM52993
CO	50.27 ppm	ALM10054
N2O	10.00 ppm	ALM51673
CO2 High	17.02 %	ALM 36532
CO2	4.99 %	ALM37876
%H2O	1.27 %	MKS204090
N2	99.99 %	K24662
NOX	826.2 ppm	ALM5105

Tester: Art Dean

HORIZON ENGINEERING LLC
13585 NE Whitaker Way • Portland, OR 97230
Phone (503) 255-5050 • Fax (503) 255-0505
www.horizonengineering.com

INTERFERENCE RESPONSE TEST

Date of Test: 9/30/03
Analyzer: Type / Model: SO_2 / 721-M

Name: David Bagwell
Serial Number: 000295

Results:

Test Gas	Concentration, ppmv or %	Analyzer Output Response, ppmv	% of Span (200 ppmv)
O_2	20.8%	0.0	0.0
CO_2	12.71%	0.0	0.0
CO	472 ppmv	0.0	0.0

Bias Check:

Test Gas	Concentration, ppmv	Analyzer Output Response, ppmv	Bias Check (%)
SO_2	170.3	170.3	0.0

Performance Specifications:

Analyzer	EPA Ref. Method	Allowable Interference (% of analyzer span)	Gas Values To Introduce Into Analyzers (EPA Method 20)
SO_2	6C	7%	200±20 ppm
O_2	6C	7%	20.9±1 percent
CO_2	6C	7%	10±1 percent
CO	20	2%	500±50 ppm

Note: CO_2 concentration was slightly higher than listed; 12.71% was the closest concentration cylinder available.

Correspondence

Source Test Plan and Correspondence

Permit (Selected Pages)

e-mailed
1/5/11

HORIZON ENGINEERING LLC

13585 NE Whitaker Way • Portland, OR 97230
Phone (503) 255-5050 • Fax (503) 255-0505
www.horizonengineering.com

January 5, 2011 Project No. 4212

Mr. Gerry Pade
Puget Sound Clean Air Agency
1904 3rd Ave, Suite 105
Seattle, WA 98101-3317

Re: Source Testing: Saint-Gobain Containers, Inc. (SGCI)
5801 East Marginal Way S.
Seattle, Washington 98134

This correspondence is notice that Horizon Engineering is to do source testing for the above-referenced facility, scheduled for February 8, 2011. This will serve as the Source Test Plan unless changes are requested prior to the start of testing.

1. **Sources to be Tested:** Two Glass Melting Furnaces (Two Sample Points Total); No. 3 and No. 4.

2. **Purpose of the Testing:** Compliance with Permit No. 11656. NO_x and SO_2 testing for Furnace No. 4 is being done in accordance with the Consent Decree (GCD) that was entered on May 7, 2010, negotiated between Saint-Gobain Containers, Inc. the EPA and affected states. Chrome testing for Furnace No. 3 is to demonstrate compliance with the National Emission Standard for Hazardous Air Pollutants for Glass Manufacturing Area Sources, 40 CFR Part 63, Subpart SSSSSS for affected sources. SGCI previously tested Furnace 3 for chromium and demonstrated compliance with the National Emission Standard for Hazardous Air Pollutants for Glass Manufacturing Area Sources, 40 CFR Part 63, Subpart SSSSSS for affected sources, however, the earlier test was performed when the furnace was manufacturing the color antique. SGCI is performing this subsequent test during the manufacture of champagne green color glass which has a higher chromium input in the batch. Note that other furnaces have been tested when running champagne green and demonstrated compliance.

3. **Source Descriptions:** There are four glass-melting furnaces at the site. Furnaces Nos. 2, 3 & 5 are oxy-fuel fired, with oxygen gas being used to support combustion rather than ambient air. This process results in greater overall energy efficiency, improved energy transfer to the glass, and a significant reduction in NO_x emissions. The primary fuel source of Furnace Nos. 2, 3, & 5 is natural gas with additional energy input from electricity delivered through electrodes immersed in the glass (electric boosting).

Furnace No. 4 is an end-port regenerative furnace and is air-fuel fired, also utilizing natural gas as its primary fuel source. As a regenerative furnace, its increased fuel efficiency is realized by utilizing the heat generated in the combustion process to preheat the air and fuel used in further combustion processes. Additionally, increased thermal efficiency is realized by the regenerative furnace in providing heat to the primary glass-melting process itself.

4. **Pollutants to be Tested:** NO_x, SO_2, and chrome

5. **Test Methods to be Used:** Testing will be conducted in accordance with EPA Methods in Title 40 Code of Federal Regulations Part 60 (40 CFR 60), Appendix A, July 1, 2007.

   Glass Melting Furnace No. 3

Flow Rate:	EPA Methods 1 and 2 (pitot traverses w/PSCAA Method 29)
CO_2 and O_2:	EPA Method 3/3A (integrated bag samples NDIR and paramagnetic analyzers)
Moisture:	EPA Method 4 (incorporated w/EPA Method 29)
Chrome:	EPA Method 29 (isokinetic impinger technique with analysis by ICP-OES/ICP-MS)

   Glass Melting Furnace No. 4

Flow Rate:	EPA Methods 1 and 2 (S- or p-type pitot flow traverses)
CO_2 and O_2:	EPA Method 3A (NDIR and paramagnetic analyzers)
Moisture:	EPA Method 4 (impinger train technique)
SO_2:	EPA Method 6C (non-dispersive ultraviolet analyzer)
NO_X:	EPA Method 7E (chemiluminescent analyzer)

6. **Continuous Analyzer Gas Sampling:** One, three, or twelve points will be sampled for EPA Methods 3A, 6C, and 7E. The number and location of the sample points will be based on a stratification check done according to EPA Method 7E.

7. **Integrated Bag Gas Sampling:** EPA Method 3/3A will be sampled simultaneously and traversed with EPA Method 29 sampling probe. Tedlar bags will be filled off the exhaust of the sampling train.

8. **Quality Assurance /Quality Control (QA/QC):** Documentation of the procedures and results will be presented in the source test report for review. This documentation will include at least the following:

   Continuous analyzer QC procedures: Field crews will operate the analyzers according to the test method requirements with additional data backup. On-site quality control procedures include:

   - Analyzer calibration error before initial run and after a failed system bias or drift test (within ± 2.0% of the calibration span of the analyzer for the low, mid, and high-level gases or 0.5 ppmv absolute difference)

- System bias at low-scale (zero) and upscale calibration gases (within ± 5.0% of the calibration span or 0.5 ppmv absolute difference)
- Drift check (within ±3.0% of calibration span for low, and mid or high-level gases, or 0.5 ppmv absolute difference)
- System response time (during initial sampling system bias test)
- Checks performed with EPA Protocol 1 or NIST traceable gases
- Oxygen analyzers will be spanned with ambient O_2 unless there is an O_2 correction.
- Leak free sampling system
- Data acquisition systems record 10-second data points or one-minute averages of one second readings
- NO_2 to NO conversion efficiency test will be provided in report
- Purge time (≥ 2 times system response time and will be done before starting run 1, whenever the gas probe is removed and re-inserted into the stack, and after bias checks)
- Sample time (at least two times the system response time at each sample point)
- Sample flow rate (within approximately 10% of the flow rate established during system response time check)
- Interference checks for analyzers used will be included in the final test report
- Average concentration (run average ≤ calibration span for each run)
- Stratification test (to be done during run 1 at three(3) or twelve(12) points according to EPA Method 7E)

Continuous analyzer QC procedures for Tedlar bags: Field crews will operate the analyzers according to the test method requirements and Horizon's additional specifications. On-site quality control procedures include:

- Daily calibration (zero and span) and calibration error (linearity) checks
- Tedlar bags will be analyzed after daily calibration and calibration error checks
- Checks performed with EPA Protocol 1gases
- Data acquisition systems record one-minute averages of one second readings

Manual equipment QC procedures: Operators will perform pre- and post-test leak checks on the sampling system and pitot lines. Thermocouples attached to the pitots and probes are calibrated in the field using EPA Alternate Method 11. A single-point calibration on each thermocouple system using a reference thermometer is performed. Thermocouples must agree within ±2°F with the reference thermometer. Also, prior to use, thermocouple systems are checked for ambient temperature before heaters are started. Nozzles are inspected for nicks or dents and pitots are examined before and after each use to confirm that they are still aligned. Pre- and post-test calibrations on the meter boxes will be included with the report, along with semi-annual calibrations of critical orifices, pitots, nozzles and thermocouples (sample box impinger outlet and oven, meter box inlet and outlet, and thermocouple indicators). Blank reagents are submitted to the laboratory with the samples. Liquid levels are marked on sample jars in the field and are verified by the laboratory.

Audit Requirement: The EPA Stationary Source Audit Sample Program was restructured and promulgated on September 30, 2010 and was made effective 30 days after that date. The Standard requires that the Facility or their representative order audit samples from an accredited Provider. Currently there are no accredited audit sample providers, and therefore no audit samples are available. If samples are not available, then audit sample analysis is not required for the EPA methods used for compliance testing. The TNI website www.nelac-institute.org/ssas/ will be referred to for a list of available accredited audit providers and audits.

9. **Number of Sampling Replicates and their Duration:**

Three (3) test runs of at least 120 minutes each will be performed on Glass Melting Furnace No. 3 for chrome.

Three (3) test runs of approximately 60 minutes each will be performed on Glass Melting Furnace No. 4 for SO_2 and NO_x.

10. **Reporting Units for Results:** Test results will be expressed as concentrations (ppmv, gr/dscf), as rates (lb/hr), and on a production basis (lb/ton of glass melted).

11. **Emission Limits:**

Source	Emission	Limit
Furnace No. 3	Chrome	0.02 lb/ton
Furnace No. 4	NO_x	Interim NOx limit based on emission factor and annual production
	SO_2	2.5 lb/ton

12. **Horizon Engrg. Contacts:** David Bagwell or
Preston Skaggs
(503) 255-5050
Fax (503) 255-0505
E-mail dbagwell@horizonengineering.com
pskaggs@horizonengineering.com

13. **Parent Company Contact:** Jayne Browning
(765) 741-7112
Fax (765) 741-4846
E-mail jayne.e.browning@saint-gobain.com

14. **Source Site Personnel:** Marlon Trigg
(206) 768-6221
Mobile (206) 730-1888
Fax (206) 768-6266
E-mail Marlon.Trigg@saint-gobain.com

15. **Regulatory Contacts:**

	Gerry Pade or
	Tom Hudson
	(206) 689-4065
	(206) 689-4026
Fax	(206) 343-7522
E-mail	gerryp@pscleanair.org
	tomh@pscleanair.org
	facilitysubmittal@pscleanair.org

16. **Applicable Process/Production/Control Information:** Process operating data and production information that characterizes the source operation is considered to be:

- Fuel usage during each run
- Amount of glass melted
- All other normally recorded process information

Process/Production/Control information is to be gathered by the Source Site Personnel and the production rate provided to Horizon for inclusion in the report. SGCI will provide confidential process information to PSCAA in a separate submittal.

The sources must operate at a normal rate during testing.

17. **Other Considerations:**
    - Furnace No. 3 has only one available port for sampling.
    - Each furnace exhaust has been checked for cyclonic flow during past testing and no cyclonic conditions exist at any exhaust. Cyclonic flow checks were done on September 22, 2005 and February 25, 2009 and are documented in those test reports.

18. **Administrative:** Unless notified prior to the start of testing, this test plan is considered to be approved for compliance testing of this source. A letter acknowledging receipt of this plan and agreement on the content (or changes as necessary) would be appreciated.

The Agency will be notified of any changes in source test plans prior to testing. It is recognized that significant changes not acknowledged, which could affect accuracy and reliability of the results, could result in test report rejection.

Source test reports will be prepared by Horizon Engineering and will include all results and example calculations, field sampling and data reduction procedures, laboratory analysis reports, and QA/QC documentation. Source test reports will be submitted to you within 60 days of the completion of the field work, unless another deadline is agreed upon. Saint-Gobain Containers should send one (1) copy of the completed source test report to you at the address above.

Any questions or comments relating to this test plan should be directed to me.

Sincerely,

David Bagwell, QSTI
Managing Member
Horizon Engineering

cc: Jayne Browning, Saint-Gobain Containers, Inc.
Marlon Trigg, Saint-Gobain Containers, Inc.
Valerie Krulic, Saint-Gobain Containers, Inc.

pscleanair.org
Puget Sound Clean Air Agency

PUGET SOUND CLEAN AIR AGENCY

1904 3rd Ave Ste 105
Seattle WA 98101-3317
Telephone: (206)689-4052; Fax: (206)343-7522
<www.pscleanair.org>
facilitysubmittal@pscleanair.org

COMPLIANCE TEST NOTIFICATION

This Notification of intended action does not constitute approval by the Agency nor does it satisfy a requirement for a test plan, if one exists.

Agency Use Only: Reg No: ***Date Received:*** ***Date Logged:***

Facility Name: Saint-Gobain Containers

Facility Address (include city/state/zip):
5801 East Marginal Way South
Seattle, Washington 98134

Facility Contact Information for Test
Name: Marlon Trigg
Phone: 206-730-1888
Fax: 206-768-6266
E-Mail: Marlon.Trigg@saint-gobain.com

Test Contractor: Horizon Engineering

Test Contractor Mailing Address:
13585 NE Whitaker Way
Portland, Oregon 97230

Test Contractor Contact Information
Name: David Bagwell
Phone: 503-255-5050
Fax: 503-255-0505
E-Mail: dbagwell@horizonengineering.com

Testing Dates: February 8, 2011

Emission Unit	Pollutant Tested	Test Method(s) (list all to be used)	Purpose for the Test (see Note below)
Glass Melting Furnace No. 4	NOx & SO_2	EPA 1, 2, 3A, 4, 6C, & 7E	Compliance with Consent Decree entered on 5/7/10
Glass Melting Furnace No. 3	Chrome	EPA Method 29	40 CFR Part 63, Subpart SSSSSS

Any Test Method Deviations?
☑ Yes *(attach explanation)* No
Method Deviations: Furnace No. 3 only has one port

Written Test Plan Required?
☑ Yes No Unknown

Attachments to this Notification? ☑ Yes *(list below)* No
Source Test Plan

Person Submitting Notification:
David Bagwell

Affiliation:
Horizon Engineering

NOTE: For example, NSPS/NESHAP Subpart, citation, NOC Order of Approval #, PSD, Puget Sound Clean Air Agency Regulations (I, II, or III), RATA, or Other. Please include the specific requirement if you have it.

Form 50-127 (02/09 *NS*)

David Bagwell

From: Gerry Pade [GerryP@pscleanair.org]
Sent: Friday, January 28, 2011 10:28 AM
To: David Bagwell; Thompson, Patti (pattithompson@dwt.com)
Subject: RE: Test plan and notification

David Bagwell
Horizon Engineering

Dear Mr. Bagwell,

To the best of my knowledge, there are no provisions in 40 CFR Part 63 under which the Agency can waive the requirement in Section 63.7(b)(1) to notify the Administrator at least 60 days in advance of a test for compliance with a NESHAP. Nonetheless, we acknowledge the difficulties associated with forecasting the production that far in advance and have no particular objection to your testing furnace 3 for chromium on 2/8/11. We look forward to observing the test and reviewing the report.

Gerry Pade
Puget Sound Clean Air Agency
1904 3rd Ave, Suite 105
Seattle, WA 98101
(206) 689-4065
gerryp@pscleanair.org

"Working together for clean air"
o_
_/ > _
(*)\(*)

From: David Bagwell [mailto:dbagwell@horizonengineering.com]
Sent: Wednesday, January 05, 2011 11:25 AM
To: Gerry Pade; Puget Sound Clean Air Agency - Facility Submittal
Cc: 'Browning, Jayne E.'; 'Trigg, Marlon'; 'Thompson, Patti'
Subject: Test plan and notification

Mr. Pade,

Attached are the Source Test Plan and notification for testing at Saint-Gobain Containers scheduled for February 8, 2011.

We would like to request a waiver to the normal 60 day notification required for the chrome testing. It is very difficult to forecast appropriate production for the testing that far in advance.

Please direct all future inquiries regarding these test plans and notifications to:

Patti Thompson, Partner
Davis Wright Tremaine LLP

Rainier Plaza, Suite 2300
777 – 108th Ave. NE
Bellevue WA 98004-5149
425.646.6112
pattithompson@dwt.com

Thank you,

David Bagwell, QSTI
Managing Member
Horizon Engineering, LLC
AmTest Air Quality an affiliate of Horizon Engineering, LLC
503-255-5050 Portland, OR office
425-222-7746 Preston, WA office
503-381-7340 Mobile
www.horizonengineering.com
www.amtestairquality.com

■ 4. Part 63 is amended by adding subpart SSSSSS to read as follows:

Subpart SSSSSS—National Emission Standards for Hazardous Air Pollutants for Glass Manufacturing Area Sources

Applicability and Compliance Dates

Sec.
63.11448 Am I subject to this subpart?
63.11449 What parts of my plant does this subpart cover?
63.11450 What are my compliance dates?

Standards, Compliance, and Monitoring Requirements

63.11451 What are the standards for new and existing sources?
63.11452 What are the performance test requirements for new and existing sources?
63.11453 What are the initial compliance demonstration requirements for new and existing sources?
63.11454 What are the monitoring requirements for new and existing sources?
63.11455 What are the continuous compliance requirements for new and existing sources?

Notifications and Records

63.11456 What are the notification requirements?
63.11457 What are the recordkeeping requirements?

Other Requirements and Information

63.11458 What General Provisions apply to this subpart?
63.11459 What definitions apply to this subpart?
63.11460 Who implements and enforces this subpart?
63.11461 [Reserved]

Tables to Subpart SSSSSS of Part 63

Table 1 to Subpart SSSSSS of Part 63—Emission Limits
Table 2 to Subpart SSSSSS of Part 63—Applicability of General Provisions to Subpart SSSSSS

Applicability and Compliance Dates

§ 63.11448 Am I subject to this subpart?

You are subject to this subpart if you own or operate a glass manufacturing facility that is an area source of hazardous air pollutant (HAP) emissions and meets all of the criteria specified in paragraphs (a) through (c) of this section.

(a) A glass manufacturing facility is a plant site that manufactures flat glass, glass containers, or pressed and blown glass by melting a mixture of raw materials, as defined in § 63.11459, to produce molten glass and form the molten glass into sheets, containers, or other shapes.

(b) An area source of HAP emissions is any stationary source or group of stationary sources within a contiguous area under common control that does not have the potential to emit any single HAP at a rate of 9.07 megagrams per year (Mg/yr) (10 tons per year (tpy)) or more and any combination of HAP at a rate of 22.68 Mg/yr (25 tpy) or more.

(c) Your glass manufacturing facility uses one or more continuous furnaces to produce glass that contains compounds of one or more glass manufacturing metal HAP, as defined in § 63.11459, as raw materials in a glass manufacturing batch formulation.

§ 63.11449 What parts of my plant does this subpart cover?

(a) This subpart applies to each existing or new affected glass melting furnace that is located at a glass manufacturing facility and satisfies the requirements specified in paragraphs (a)(1) through (3) of this section.

(1) The furnace is a continuous furnace, as defined in § 63.11459.

(2) The furnace is charged with compounds of one or more glass manufacturing metal HAP as raw materials.

(3) The furnace is used to produce glass, which contains one or more of the glass manufacturing metal HAP as raw materials, at a rate of at least 45 Mg/yr (50 tpy).

(b) A furnace that is a research and development process unit, as defined in § 63.11459, is not an affected furnace under this subpart.

(c) An affected source is an existing source if you commenced construction or reconstruction of the affected source on or before September 20, 2007.

(d) An affected source is a new source if you commenced construction or reconstruction of the affected source after September 20, 2007.

(e) If you own or operate an area source subject to this subpart, you must obtain a permit under 40 CFR part 70 or 40 CFR part 71.

§ 63.11450 What are my compliance dates?

(a) If you have an existing affected source, you must comply with the applicable emission limits specified in § 63.11451 of this subpart no later than December 28, 2009. As specified in section 112(i)(3)(B) of the Clean Air Act and in § 63.6(i)(4)(A), you may request that the Administrator or delegated authority grant an extension allowing up to 1 additional year to comply with the applicable emission limits if such additional period is necessary for the installation of emission controls.

(b) If you have a new affected source, you must comply with this subpart according to paragraphs (b)(1) and (2) of this section.

(1) If you start up your affected source on or before December 26, 2007, you must comply with the applicable emission limit specified in § 63.11451 no later than December 26, 2007.

(2) If you start up your affected source after December 26, 2007, you must comply with the applicable emission limit specified in § 63.11451 upon initial startup of your affected source.

(c) If you own or operate a furnace that produces glass containing one or more glass manufacturing metal HAP as raw materials at an annual rate of less than 45 Mg/yr (50 tpy), and you increase glass production for that furnace to an annual rate of at least 45 Mg/yr (50 tpy), you must comply with the applicable emission limit specified in § 63.11451 within 2 years of the date on which you increased the glass production rate for the furnace to at least 45 Mg/yr (50 tpy).

(d) If you own or operate a furnace that produces glass at an annual rate of at least 45 Mg/yr (50 tpy) and is not charged with glass manufacturing metal HAP, and you begin production of a glass product that includes one or more glass manufacturing metal HAP as raw materials, and you produce at least 45 Mg/yr (50 tpy) of this glass product, you must comply with the applicable emission limit specified in § 63.11451 within 2 years of the date on which you introduced production of the glass product that contains glass manufacturing metal HAP.

(e) You must meet the notification requirements in § 63.11456 according to the schedule in § 63.11456 and in 40 CFR part 63, subpart A. Some of the notifications must be submitted before you are required to comply with emission limits specified in this subpart.

Standards, Compliance, and Monitoring Requirements

§ 63.11451 What are the standards for new and existing sources?

If you are an owner or operator of an affected furnace, as defined in § 63.11449(a), you must meet the applicable emission limit specified in Table 1 to this subpart.

§ 63.11452 What are the performance test requirements for new and existing sources?

(a) If you own or operate an affected furnace that is subject to an emission limit specified in Table 1 to this subpart, you must conduct a performance test according to paragraphs (a)(1) through (3) and paragraph (b) of this section.

(1) For each affected furnace, you must conduct a performance test within 180 days after your compliance date and report the results in your Notification of Compliance Status, except as specified in paragraph (a)(2) of this section.

(2) You are not required to conduct a performance test on the affected furnace if you satisfy the conditions described in paragraphs (a)(2)(i) through (iii) of this section.

(i) You conducted a performance test on the affected furnace within the past 5 years of the compliance date using the same test methods and procedures specified in paragraph (b) of this section.

(ii) The performance test demonstrated that the affected furnace met the applicable emission limit specified in Table 1 to this subpart.

(iii) Either no process changes have been made since the test, or you can demonstrate that the results of the performance test, with or without adjustments, reliably demonstrate compliance with the applicable emission limit.

(3) If you operate multiple identical furnaces, as defined in § 63.11459, that are affected furnaces, you are required to test only one of the identical furnaces if you meet the conditions specified in paragraphs (a)(3)(i) through (iii) of this section.

(i) You must conduct the performance test while the furnace is producing glass that has the greatest potential to emit the glass manufacturing metal HAP from among the glass formulations that are used in any of the identical furnaces.

(ii) You certify in your Notification of Compliance Status that the identical furnaces meet the definition of identical furnaces specified in § 63.11459.

(iii) You provide in your Notification of Compliance Status documentation that demonstrates why the tested glass formulation has the greatest potential to emit the glass manufacturing metal HAP.

(b) You must conduct each performance test according to the requirements in § 63.7 and paragraphs (b)(1) through (12) and either paragraph (b)(13) or (b)(14) of this section.

(1) Install and validate all monitoring equipment required by this subpart before conducting the performance test.

(2) You may not conduct performance tests during periods of startup, shutdown, or malfunction, as specified in § 63.7(e)(1).

(3) Conduct the test while the source is operating at the maximum production rate.

(4) Conduct at least three separate test runs with a minimum duration of 1 hour for each test run, as specified in § 63.7(e)(3).

(5) Record the test date.

(6) Identify the emission source tested.

(7) Collect and record the emission test data listed in this section for each run of the performance test.

(8) Locate all sampling sites at the outlet of the furnace control device or at the furnace stack prior to any releases to the atmosphere.

(9) Select the locations of sampling ports and the number of traverse points using Method 1 or 1A of 40 CFR part 60, appendix A–1.

(10) Measure the gas velocity and volumetric flow rate using Method 2, 2A, 2C, 2F, or 2G of 40 CFR part 60, appendices A–1 and A–2, during each test run.

(11) Conduct gas molecular weight analysis using Methods 3, 3A, or 3B of 40 CFR part 60, appendix A–2, during each test run. You may use ANSI/ASME PTC 19.10–1981, Flue and Exhaust Gas Analyses (incorporated by reference—see § 63.14) as an alternative to EPA Method 3B.

(12) Measure gas moisture content using Method 4 of 40 CFR part 60, appendix A–3, during each test run.

(13) To meet the particulate matter (PM) emission limit specified in Table 1 to this subpart, you must conduct the procedures specified in paragraphs (b)(13)(i) through (v) of this section.

(i) Measure the PM mass emission rate at the outlet of the control device or at the stack using Method 5 or 17 of 40 CFR part 60, appendices A–3 or A–6, for each test run.

(ii) Calculate the PM mass emission rate in the exhaust stream for each test run.

(iii) Measure and record the glass production rate (kilograms (tons) per hour of product) for each test run.

(iv) Calculate the production-based PM mass emission rate (g/kg (lb/ton)) for each test run using Equation 1 of this section.

$$MP = \frac{ER}{P} \qquad \text{(Equation 1)}$$

Where:

MP = Production-based PM mass emission rate, grams of PM per kilogram (pounds of PM per ton) of glass produced.

ER = PM mass emission rate measured using Methods 5 or 17 during each performance test run, grams (pounds) per hour.

P = Average glass production rate for the performance test, kilograms (tons) of glass produced per hour.

(v) Calculate the 3-hour block average production-based PM mass emission rate as the average of the production-based PM mass emission rates for each test run.

(14) To meet the metal HAP emission limit specified in Table 1 to this subpart, you must conduct the procedures specified in paragraphs (b)(14)(i) through (v) of this section.

(i) Measure the metal HAP mass emission rate at the outlet of the control device or at the stack using Method 29 of 40 CFR part 60, appendix A–8, for each test run.

(ii) Calculate the metal HAP mass emission rate in the exhaust stream for the glass manufacturing metal HAP that are added as raw materials to the glass manufacturing formulation for each test run.

(iii) Measure and record the glass production rate (kilograms (tons) per hour of product) for each test run.

(iv) Calculate the production-based metal HAP mass emission rate (g/kg (lb/ton)) for each test run using Equation 2 of this section.

$$MPM = \frac{ERM}{P} \qquad \text{(Equation 2)}$$

Where:

MPM = Production-based metal HAP mass emission rate, grams of metal HAP per kilogram (pounds of metal HAP per ton) of glass produced.

ERM = Sum of the metal HAP mass emission rates for the glass manufacturing metal HAP that are added as raw materials to the glass manufacturing formulation and are measured using Method 29 during each performance test run, grams (pounds) per hour.

P = Average glass production rate for the performance test, kilograms (tons) of glass produced per hour.

(v) Calculate the 3-hour block average production-based metal HAP mass emission rate as the average of the production-based metal HAP mass emission rates for each test run.

§ 63.11453 What are the initial compliance demonstration requirements for new and existing sources?

(a) If you own or operate an affected source, you must submit a Notification of Compliance Status in accordance with §§ 63.9(h) and 63.11456(b).

(b) For each existing affected furnace that is subject to the emission limits specified in Table 1 to this subpart, you must demonstrate initial compliance according to the requirements in paragraphs (b)(1) through (4) of this section.

(1) For each fabric filter that is used to meet the emission limit specified in Table 1 to this subpart, you must visually inspect the system ductwork and fabric filter unit for leaks. You must also inspect the inside of each fabric filter for structural integrity and fabric filter condition. You must record the results of the inspection and any maintenance action as required in § 63.11457(a)(6).

(2) For each electrostatic precipitator (ESP) that is used to meet the emission limit specified in Table 1 to this subpart, you must verify the proper functioning of the electronic controls for corona power and rapper operation, that the corona wires are energized, and that adequate air pressure is present on the rapper manifold. You must also visually inspect the system ductwork and ESP housing unit and hopper for leaks and inspect the interior of the ESP to determine the condition and integrity of corona wires, collection plates, hopper, and air diffuser plates. You must record the results of the inspection and any maintenance action as required in § 63.11457(a)(6).

(3) You must conduct each inspection specified in paragraphs (b)(1) and (2) of this section no later than 60 days after your applicable compliance date specified in § 63.11450, except as specified in paragraphs (b)(3)(i) and (ii) of this section.

(i) An initial inspection of the internal components of a fabric filter is not required if an inspection has been performed within the past 12 months.

(ii) An initial inspection of the internal components of an ESP is not required if an inspection has been performed within the past 24 months.

(4) You must satisfy the applicable requirements for performance tests specified in § 63.11452.

(c) For each new affected furnace that is subject to the emission limit specified in Table 1 to this subpart and is controlled with a fabric filter, you must install, operate, and maintain a bag leak detection system according to paragraphs (c)(1) through (3) of this section.

(1) Each bag leak detection system must meet the specifications and requirements in paragraphs (c)(1)(i) through (viii) of this section.

(i) The bag leak detection system must be certified by the manufacturer to be capable of detecting PM emissions at concentrations of 1 milligram per dry standard cubic meter (0.00044 grains per actual cubic foot) or less.

(ii) The bag leak detection system sensor must provide output of relative PM loadings. The owner or operator shall continuously record the output from the bag leak detection system using electronic or other means (e.g., using a strip chart recorder or a data logger).

(iii) The bag leak detection system must be equipped with an alarm system that will sound when the system detects an increase in relative particulate loading over the alarm set point established according to paragraph (c)(1)(iv) of this section, and the alarm must be located such that it can be heard by the appropriate plant personnel.

(iv) In the initial adjustment of the bag leak detection system, you must establish, at a minimum, the baseline output by adjusting the sensitivity (range) and the averaging period of the device, the alarm set points, and the alarm delay time.

(v) Following initial adjustment, you shall not adjust the averaging period, alarm set point, or alarm delay time without approval from the Administrator or delegated authority except as provided in paragraph (c)(1)(vi) of this section.

(vi) Once per quarter, you may adjust the sensitivity of the bag leak detection system to account for seasonal effects, including temperature and humidity, according to the procedures identified in the site-specific monitoring plan required by paragraph (c)(2) of this section.

(vii) You must install the bag leak detection sensor downstream of the fabric filter.

(viii) Where multiple detectors are required, the system's instrumentation and alarm may be shared among detectors.

(2) You must develop and submit to the Administrator or delegated authority for approval a site-specific monitoring plan for each bag leak detection system. You must operate and maintain the bag leak detection system according to the site-specific monitoring plan at all times. Each monitoring plan must describe the items in paragraphs (c)(2)(i) through (vi) of this section.

(i) Installation of the bag leak detection system;

(ii) Initial and periodic adjustment of the bag leak detection system, including how the alarm set-point will be established;

(iii) Operation of the bag leak detection system, including quality assurance procedures;

(iv) How the bag leak detection system will be maintained, including a routine maintenance schedule and spare parts inventory list;

(v) How the bag leak detection system output will be recorded and stored; and

(vi) Corrective action procedures as specified in paragraph (c)(3) of this section. In approving the site-specific monitoring plan, the Administrator or delegated authority may allow owners and operators more than 3 hours to alleviate a specific condition that causes an alarm if the owner or operator identifies in the monitoring plan this specific condition as one that could lead to an alarm, adequately explains why it is not feasible to alleviate this condition within 3 hours of the time the alarm occurs, and demonstrates that the requested time will ensure alleviation of this condition as expeditiously as practicable.

(3) For each bag leak detection system, you must initiate procedures to determine the cause of every alarm within 1 hour of the alarm. Except as provided in paragraph (c)(2)(vi) of this section, you must alleviate the cause of the alarm within 3 hours of the alarm by taking whatever corrective action(s) are necessary. Corrective actions may include, but are not limited to the following:

(i) Inspecting the fabric filter for air leaks, torn or broken bags or filter media, or any other condition that may cause an increase in PM emissions;

(ii) Sealing off defective bags or filter media;

(iii) Replacing defective bags or filter media or otherwise repairing the control device;

(iv) Sealing off a defective fabric filter compartment;

(v) Cleaning the bag leak detection system probe or otherwise repairing the bag leak detection system; or

(vi) Shutting down the process producing the PM emissions.

(d) For each new affected furnace that is subject to the emission limit specified in Table 1 to this subpart and is controlled with an ESP, you must install, operate, and maintain according to the manufacturer's specifications, one or more continuous parameter monitoring systems (CPMS) for measuring and recording the secondary voltage and secondary electrical current to each field of the ESP according to paragraphs (d)(1) through (13) of this section.

(1) The CPMS must have an accuracy of 1 percent of the secondary voltage and secondary electrical current, or better.

(2) Your CPMS must be capable of measuring the secondary voltage and secondary electrical current over a range that extends from a value that is at least 20 percent less than the lowest value that you expect your CPMS to measure, to a value that is at least 20 percent greater than the highest value that you expect your CPMS to measure.

(3) The signal conditioner, wiring, power supply, and data acquisition and recording system of your CPMS must be compatible with the output signal of the sensors used in your CPMS.

(4) The data acquisition and recording system of your CPMS must be able to record values over the entire range specified in paragraph (d)(2) of this section.

(5) The data recording system associated with your CPMS must have

a resolution of one-half of the required overall accuracy of your CPMS, as specified in paragraph (d)(1) of this section, or better.

(6) Your CPMS must be equipped with an alarm system that will sound when the system detects a decrease in secondary voltage or secondary electrical current below the alarm set point established according to paragraph (d)(7) of this section, and the alarm must be located such that it can be heard by the appropriate plant personnel.

(7) In the initial adjustment of the CPMS, you must establish, at a minimum, the baseline output by adjusting the sensitivity (range) and the averaging period of the device, the alarm set points, and the alarm delay time.

(8) You must install each sensor of the CPMS in a location that provides representative measurement of the appropriate parameter over all operating conditions, taking into account the manufacturer's guidelines.

(9) You must perform an initial calibration of your CPMS based on the procedures specified in the manufacturer's owner's manual.

(10) Your CPMS must be designed to complete a minimum of one cycle of operation for each successive 15-minute period. To have a valid hour of data, you must have at least three of four equally-spaced data values (or at least 75 percent of the total number of values if you collect more than four data values per hour) for that hour (not including startup, shutdown, malfunction, or out of control periods).

(11) You must record valid data from at least 90 percent of the hours during which the affected source or process operates.

(12) You must record the results of each inspection, calibration, initial validation, and accuracy audit.

(13) At all times, you must maintain your CPMS including, but not limited to, maintaining necessary parts for routine repairs of the CPMS.

(e) For each new affected furnace that is subject to the emission limit specified in Table 1 to this subpart and is controlled by a device other than a fabric filter or an ESP, you must prepare and submit a monitoring plan to EPA or the delegated authority for approval. Each plan must contain the information in paragraphs (e)(1) through (5) of this section.

(1) A description of the device;

(2) Test results collected in accordance with § 63.11452 verifying the performance of the device for reducing PM or metal HAP to the levels required by this subpart;

(3) Operation and maintenance plan for the control device (including a preventative maintenance schedule consistent with the manufacturer's instructions for routine and long-term maintenance) and continuous monitoring system;

(4) A list of operating parameters that will be monitored to maintain continuous compliance with the applicable emission limits; and

(5) Operating parameter limits based on monitoring data collected during the performance test.

§ 63.11454 What are the monitoring requirements for new and existing sources?

(a) For each monitoring system required by this subpart, you must install, calibrate, operate, and maintain the monitoring system according to the manufacturer's specifications and the requirements specified in paragraphs (a)(1) through (7) of this section.

(1) You must install each sensor of your monitoring system in a location that provides representative measurement of the appropriate parameter over all operating conditions, taking into account the manufacturer's guidelines.

(2) You must perform an initial calibration of your monitoring system based on the manufacturer's recommendations.

(3) You must use a monitoring system that is designed to complete a minimum of one cycle of operation for each successive 15-minute period.

(4) For each existing affected furnace, you must record the value of the monitored parameter at least every 8 hours. The value can be recorded electronically or manually.

(5) You must record the results of each inspection, calibration, monitoring system maintenance, and corrective action taken to return the monitoring system to normal operation.

(6) At all times, you must maintain your monitoring system including, but not limited to, maintaining necessary parts for routine repairs of the system.

(7) You must perform the required monitoring whenever the affected furnace meets the conditions specified in paragraph (a)(7)(i) or (ii) of this section.

(i) The furnace is being charged with one or more of the glass manufacturing metal HAP as raw materials.

(ii) The furnace is in transition between producing glass that contains one or more of the glass metal HAP as raw materials and glass that does not contain any of the glass manufacturing metal HAP as raw materials. The transition period begins when the furnace is charged with raw materials that do not contain any of the glass manufacturing metal HAP as raw materials and ends when the furnace begins producing a saleable glass product that does not contain any of the glass manufacturing metal HAP as raw materials.

(b) For each existing furnace that is subject to the emission limit specified in Table 1 to this subpart and is controlled with an ESP, you must meet the requirements specified in paragraphs (b)(1) or (2) of this section.

(1) You must monitor the secondary voltage and secondary electrical current to each field of the ESP according to the requirements of paragraph (a) of this section, or

(2) You must submit a request for alternative monitoring, as described in paragraph (g) of this section.

(c) For each existing furnace that is subject to the emission limit specified in Table 1 to this subpart and is controlled with a fabric filter, you must meet the requirements specified in paragraphs (c)(1) or (2) of this section.

(1) You must monitor the inlet temperature to the fabric filter according to the requirements of paragraph (a) of this section, or

(2) You must submit a request for alternative monitoring, as described in paragraph (g) of this section.

(d) For each new furnace that is subject to the emission limit specified in Table 1 to this subpart and is controlled with an ESP, you must monitor the voltage and electrical current to each field of the ESP on a continuous basis using one or more CPMS according to the requirements for CPMS specified in § 63.11453(d).

(e) For each new furnace that is subject to the emission limit specified in Table 1 to this subpart and is controlled with a fabric filter, you must install and operate a bag leak detection system according to the requirements specified in § 63.11453(c).

(f) For each new or existing furnace that is subject to the emission limit specified in Table 1 to this subpart and is equipped with a control device other than an ESP or fabric filter, you must meet the requirements in § 63.8(f) and submit a request for approval of alternative monitoring methods to the Administrator no later than the submittal date for the Notification of Compliance Status, as specified in § 63.11456(b). The request must contain the information specified in paragraphs (f)(1) through (5) of this section.

(1) Description of the alternative add-on air pollution control device (APCD).

(2) Type of monitoring device or method that will be used, including the sensor type, location, inspection

procedures, quality assurance and quality control (QA/QC) measures, and data recording device.

(3) Operating parameters that will be monitored.

(4) Frequency that the operating parameter values will be measured and recorded.

(5) Procedures for inspecting the condition and operation of the control device and monitoring system.

(g) If you wish to use a monitoring method other than those specified in paragraph (b)(1) or (c)(1) of this section, you must meet the requirements in § 63.8(f) and submit a request for approval of alternative monitoring methods to the Administrator no later than the submittal date for the Notification of Compliance Status, as specified in § 63.11456(b). The request must contain the information specified in paragraphs (g)(1) through (5) of this section.

(1) Type of monitoring device or method that will be used, including the sensor type, location, inspection procedures, QA/QC measures, and data recording device.

(2) Operating parameters that will be monitored.

(3) Frequency that the operating parameter values will be measured and recorded.

(4) Procedures for inspecting the condition and operation of the monitoring system.

(5) Explanation for how the alternative monitoring method will provide assurance that the emission control device is operating properly.

§ 63.11455 What are the continuous compliance requirements for new and existing sources?

(a) You must be in compliance with the applicable emission limits in this subpart at all times, except during periods of startup, shutdown, and malfunction.

(b) You must always operate and maintain your affected source, including air pollution control and monitoring equipment, according to the provisions in § 63.6(e)(1)(i).

(c) For each affected furnace that is subject to the emission limit specified in Table 1 to this subpart, you must monitor the performance of the furnace emission control device under the conditions specified in § 63.11454(a)(7) and according to the requirements in §§ 63.6(e)(1) and 63.8(c) and paragraphs (c)(1) through (6) of this section.

(1) For each existing affected furnace that is controlled with an ESP, you must monitor the parameters specified in § 63.11454(b) in accordance with the requirements of § 63.11454(a) or as specified in your approved alternative monitoring plan.

(2) For each new affected furnace that is controlled with an ESP, you must comply with the monitoring requirements specified in § 63.11454(d) in accordance with the requirements of § 63.11454(a) or as specified in your approved alternative monitoring plan.

(3) For each existing affected furnace that is controlled with a fabric filter, you must monitor the parameter specified in § 63.11454(c) in accordance with the requirements of § 63.11454(a) or as specified in your approved alternative monitoring plan.

(4) For each new affected furnace that is controlled with a fabric filter, you must comply with the monitoring requirements specified in § 63.11454(e) in accordance with the requirements of § 63.11454(a) or as specified in your approved alternative monitoring plan.

(5) For each affected furnace that is controlled with a device other than a fabric filter or ESP, you must comply with the requirements of your approved alternative monitoring plan, as required in § 63.11454(g).

(6) For each monitoring system that is required under this subpart, you must keep the records specified in § 63.11457.

(d) Following the initial inspections, you must perform periodic inspections and maintenance of each affected furnace control device according to the requirements in paragraphs (d)(1) through (4) of this section.

(1) For each fabric filter, you must conduct inspections at least every 12 months according to paragraphs (d)(1)(i) through (iii) of this section.

(i) You must inspect the ductwork and fabric filter unit for leakage.

(ii) You must inspect the interior of the fabric filter for structural integrity and to determine the condition of the fabric filter.

(iii) If an initial inspection is not required, as specified in § 63.11453(b)(3)(i), the first inspection must not be more than 12 months from the last inspection.

(2) For each ESP, you must conduct inspections according to the requirements in paragraphs (d)(2)(i) through (iii) of this section.

(i) You must conduct visual inspections of the system ductwork, housing unit, and hopper for leaks at least every 12 months.

(ii) You must conduct inspections of the interior of the ESP to determine the condition and integrity of corona wires, collection plates, plate rappers, hopper, and air diffuser plates every 24 months.

(iii) If an initial inspection is not required, as specified in § 63.11453(b)(3)(ii), the first inspection must not be more than 24 months from the last inspection.

(3) You must record the results of each periodic inspection specified in this section in a logbook (written or electronic format), as specified in § 63.11457(c).

(4) If the results of a required inspection indicate a problem with the operation of the emission control system, you must take immediate corrective action to return the control device to normal operation according to the equipment manufacturer's specifications or instructions.

(e) For each affected furnace that is subject to the emission limit specified in Table 1 to this subpart and can meet the applicable emission limit without the use of a control device, you must demonstrate continuous compliance by satisfying the applicable recordkeeping requirements specified in § 63.11457.

Notifications and Records

§ 63.11456 What are the notification requirements?

(a) If you own or operate an affected furnace, as defined in § 63.11449(a), you must submit an Initial Notification in accordance with § 63.9(b) and paragraphs (a)(1) and (2) of this section by the dates specified.

(1) As specified in § 63.9(b)(2), if you start up your affected source before December 26, 2007, you must submit an Initial Notification not later than April 24, 2008 or within 120 days after your affected source becomes subject to the standard.

(2) The Initial Notification must include the information specified in § 63.9(b)(2)(i) through (iv).

(b) You must submit a Notification of Compliance Status in accordance with § 63.9(h) and the requirements in paragraphs (b)(1) and (2) of this section.

(1) If you own or operate an affected furnace and are required to conduct a performance test, you must submit a Notification of Compliance Status, including the performance test results, before the close of business on the 60th day following the completion of the performance test, according to § 60.8 or § 63.10(d)(2).

(2) If you own or operate an affected furnace and satisfy the conditions specified in § 63.11452(a)(2) and are not required to conduct a performance test, you must submit a Notification of Compliance Status, including the results of the previous performance test, before the close of business on the compliance date specified in § 63.11450.

§ 63.11457 What are the recordkeeping requirements?

(a) You must keep the records specified in paragraphs (a)(1) through (8) of this section.

(1) A copy of any Initial Notification and Notification of Compliance Status that you submitted and all documentation supporting those notifications, according to the requirements in § 63.10(b)(2)(xiv).

(2) The records specified in § 63.10(b)(2) and (c)(1) through (13).

(3) The records required to show continuous compliance with each emission limit that applies to you, as specified in § 63.11455.

(4) For each affected source, records of production rate on a process throughput basis (either feed rate to the process unit or discharge rate from the process unit). The production data must include the amount (weight or weight percent) of each ingredient in the batch formulation, including all glass manufacturing metal HAP compounds.

(5) Records of maintenance activities and inspections performed on control devices as specified in §§ 63.11453(b) and 63.11455(d), according to paragraphs (a)(5)(i) through (v) of this section.

(i) The date, place, and time of inspections of control device ductwork, interior, and operation.

(ii) Person conducting the inspection.

(iii) Technique or method used to conduct the inspection.

(iv) Control device operating conditions during the time of the inspection.

(v) Results of the inspection and description of any corrective action taken.

(6) Records of all required monitoring data and supporting information including all calibration and maintenance records.

(7) For each bag leak detection system, the records specified in paragraphs (a)(7)(i) through (iii) of this section.

(i) Records of the bag leak detection system output;

(ii) Records of bag leak detection system adjustments, including the date and time of the adjustment, the initial bag leak detection system settings, and the final bag leak detection system settings; and

(iii) The date and time of all bag leak detection system alarms, the time that procedures to determine the cause of the alarm were initiated, the cause of the alarm, an explanation of the actions taken, the date and time the cause of the alarm was alleviated, and whether the alarm was alleviated within 3 hours of the alarm.

(8) Records of any approved alternative monitoring method(s) or test procedure(s).

(b) Your records must be in a form suitable and readily available for expeditious review, according to § 63.10(b)(1).

(c) You must record the results of each inspection and maintenance action in a logbook (written or electronic format). You must keep the logbook onsite and make the logbook available to the permitting authority upon request.

(d) As specified in § 63.10(b)(1), you must keep each record for a minimum of 5 years following the date of each occurrence, measurement, maintenance, corrective action, report, or record.

You must keep each record onsite for at least 2 years after the date of each occurrence, measurement, maintenance, corrective action, report, or record, according to § 63.10(b)(1). You may keep the records offsite for the remaining three years.

Other Requirements and Information

§ 63.11458 What General Provisions apply to this subpart?

You must satisfy the requirements of the General Provisions in 40 CFR part 63, subpart A, as specified in Table 2 to this subpart.

§ 63.11459 What definitions apply to this subpart?

Terms used in this subpart are defined in the Clean Air Act, in § 63.2, and in this section as follows:

Air pollution control device (APCD) means any equipment that reduces the quantity of a pollutant that is emitted to the air.

Continuous furnace means a glass manufacturing furnace that operates continuously except during periods of maintenance, malfunction, control device installation, reconstruction, or rebuilding.

Cullet means recycled glass that is mixed with raw materials and charged to a glass melting furnace to produce glass. Cullet is not considered to be a raw material for the purposes of this subpart.

Electrostatic precipitator (ESP) means an APCD that removes PM from an exhaust gas stream by applying an electrical charge to particles in the gas stream and collecting the charged particles on plates carrying the opposite electrical charge.

Fabric filter means an APCD used to capture PM by filtering a gas stream through filter media.

Furnace stack means a conduit or conveyance through which emissions from the furnace melter are released to the atmosphere.

Glass manufacturing metal HAP means an oxide or other compound of any of the following metals included in the list of urban HAP for the Integrated Urban Air Toxics Strategy and for which Glass Manufacturing was listed as an area source category: arsenic, cadmium, chromium, lead, manganese, and nickel.

Glass melting furnace means a unit comprising a refractory-lined vessel in which raw materials are charged and melted at high temperature to produce molten glass.

Identical furnaces means two or more furnaces that are identical in design, including manufacturer, dimensions, production capacity, charging method, operating temperature, fuel type, burner configuration, and exhaust system configuration and design.

Particulate matter (PM) means, for purposes of this subpart, emissions of PM that serve as a measure of filterable particulate emissions, as measured by Methods 5 or 17 (40 CFR part 60, appendices A–3 and A–6), and as a surrogate for glass manufacturing metal HAP compounds contained in the PM including, but not limited to, arsenic, cadmium, chromium, lead, manganese, and nickel.

Plant site means all contiguous or adjoining property that is under common control, including properties that are separated only by a road or other public right-of-way. Common control includes properties that are owned, leased, or operated by the same entity, parent entity, subsidiary, or any combination thereof.

Raw material means minerals, such as silica sand, limestone, and dolomite; inorganic chemical compounds, such as soda ash (sodium carbonate), salt cake (sodium sulfate), and potash (potassium carbonate); metal oxides and other metal-based compounds, such as lead oxide, chromium oxide, and sodium antimonate; metal ores, such as chromite and pyrolusite; and other substances that are intentionally added to a glass manufacturing batch and melted in a glass melting furnace to produce glass. Metals that are naturally-occurring trace constituents or contaminants of other substances are not considered to be raw materials. Cullet and material that is recovered from a furnace control device for recycling into the glass formulation are not considered to be raw materials for the purposes of this subpart.

Research and development process unit means a process unit whose purpose is to conduct research and development for new processes and products and is not engaged in the manufacture of products for commerce sale, except in a de minimis manner.

§ 63.11460 Who implements and enforces this subpart?

(a) This subpart can be implemented and enforced by the U.S. EPA, or a delegated authority such as your State, local, or tribal agency. If the U.S. EPA Administrator has delegated authority to your State, local, or tribal agency, then that agency has the authority to implement and enforce this subpart. You should contact your U.S. EPA Regional Office to find out if this subpart is delegated to your State, local, or tribal agency.

(b) In delegating implementation and enforcement authority of this subpart to a State, local, or tribal agency under 40 CFR part 63, subpart E, the authorities contained in paragraphs (b)(1) through (4) of this section are retained by the Administrator of the U.S. EPA and are not transferred to the State, local, or tribal agency.

(1) Approval of alternatives to the applicability requirements in §§ 63.11448 and 63.11449, the compliance date requirements in § 63.11450, and the emission limits specified in § 63.11451.

(2) Approval of a major change to test methods under § 63.7(e)(2)(ii) and (f) and as defined in § 63.90.

(3) Approval of major alternatives to monitoring under § 63.8(f) and as defined in § 63.90.

(4) Approval of major alternatives to recordkeeping under § 63.10(f) and as defined in § 63.90.

§ 63.11461 [Reserved]

Tables to Subpart SSSSSS of Part 63

As required in § 63.11451, you must comply with each emission limit that applies to you according to the following table:

TABLE 1 TO SUBPART SSSSSS OF PART 63—EMISSION LIMITS

For each. . .	You must meet one of the following emission limits. . .
1. New or existing glass melting furnace that produces glass at an annual rate of at least 45 Mg/yr (50 tpy) AND is charged with compounds of arsenic, cadmium, chromium, manganese, lead, or nickel as raw materials.	a. The 3-hour block average production-based PM mass emission rate must not exceed 0.1 gram per kilogram (g/kg) (0.2 pound per ton (lb/ton)) of glass produced; OR b. The 3-hour block average production-based metal HAP mass emission rate must not exceed 0.01 g/kg (0.02 lb/ton) of glass produced.

As stated in § 63.11458, you must comply with the requirements of the NESHAP General Provisions (40 CFR part 63, subpart A), as shown in the following table:

TABLE 2 TO SUBPART SSSSSS OF PART 63—APPLICABILITY OF GENERAL PROVISIONS TO SUBPART SSSSSS

Citation	Subject
§ 63.1(a), (b), (c)(1), (c)(2), (c)(5), (e)	Applicability.
§ 63.2	Definitions.
§ 63.3	Units and Abbreviations.
§ 63.4	Prohibited Activities.
§ 63.5	Construction/Reconstruction.
§ 63.6(a), (b)(1)–(b)(5), (b)(7), (c)(1), (c)(2), (c)(5), (e)(1), (f), (g), (i), (j)	Compliance with Standards and Maintenance Requirements.
§ 63.7	Performance Testing Requirements.
§ 63.8(a)(1), (a)(2), (b), (c)(1)–(c)(4), (c)(7)(i)(B), (c)(7)(ii), (c)(8), (d), (e)(1), (e)(4), (f).	Monitoring Requirements.
§ 63.9(a), (b)(1)(i)–(b)(2)(v), (b)(5), (c), (d), (h)–(j)	Notification Requirements.
§ 63.10(a), (b)(1), (b)(2)(i)–(b)(2)(xii)	Recordkeeping and Reporting Requirements.
§ 63.10(b)(2)(xiv), (c), (f)	Documentation for Initial Notification and Notification of Compliance Status.
§ 63.12	State Authority and Delegations.
§ 63.13	Addresses.
§ 63.14	Incorporations by Reference.
§ 63.15	Availability of Information.
§ 63.16	Performance Track Provisions.

■ 5. Part 63 is amended by adding subpart TTTTTT to read as follows:

Subpart TTTTTT—National Emission Standards for Hazardous Air Pollutants for Secondary Nonferrous Metals Processing Area Sources

Applicability and Compliance Dates

Sec.

63.11462 Am I subject to this subpart?

63.11463 What parts of my plant does this subpart cover?

63.11464 What are my compliance dates?

Standards, Compliance, and Monitoring Requirements

63.11465 What are the standards for new and existing sources?

63.11466 What are the performance test requirements for new and existing sources?

63.11467 What are the initial compliance demonstration requirements for new and existing sources?

63.11468 What are the monitoring requirements for new and existing sources?

63.11469 What are the notification requirements?

63.11470 What are the recordkeeping requirements?

Other Requirements and Information

63.11471 What General Provisions apply to this subpart?

63.11472 What definitions apply to this subpart?

63.11473 Who implements and enforces this subpart?

63.11474 [Reserved]

Tables to Subpart TTTTTT of Part 63

Table 1 to Subpart TTTTTT of Part 63—Applicability of General Provisions to Subpart TTTTTT

What Is The Compliance Date?

- Existing Sources: December 28, 2009.
- New Sources: Upon initial startup.

What Are The Permitting Requirements?

- Affected facilities must obtain a Title V permit.

What Are The Impacts?

- Three glass plants are expected to have to add controls to comply with the rule.

What Records Are Required?

Reporting:

- Initial notification and notification of compliance status (may be combined), due 120 days after promulgation date
- Initial notification informs EPA that the facility is subject to the standards. Notification of compliance status provides certification of compliance with standards.
- No ongoing compliance reports to be required beyond Title V Requirements.

Recordkeeping:

- Records to include copies of notifications submitted to EPA, glass production data, and records of monitoring and inspections.
- Records to be maintained in a form suitable and readily available for expeditious review.

You can also contact your Regional EPA air toxics office at the following numbers:

Address	States	Website/ Phone Number
Region 1 1 Congress Street Suite 1100 Boston, MA 02114-2023	CT, MA, ME, NH, RI, VT	www.epa.gov/region1 (888) 372-7341 (617) 918-1650
Region 2 290 Broadway New York, NY 10007-1866	NJ, NY, PR, VI	www.epa.gov/region2 (212) 637-4023
Region 3 1650 Arch Street Philadelphia, PA 19103-2029	DE, MD, PA, VA, WV, DC	www.epa.gov/region3 (800) 241-1754 (215) 814-2196
Region 4 Atlanta Federal Center 61 Forsyth Street, SW Atlanta, GA 30303-8960	FL, NC, SC, KY, TN, GA, AL, MS	www.epa.gov/region4 (404) 562-9131
Region 5 77 West Jackson Blvd Chicago, IL 60604-3507	IL, IN, MI, WI, MN, OH	www.epa.gov/region5 (312) 353-3575 (312) 353-4145 (312) 886-3850
Region 6 1445 Ross Avenue Suite 1200 Dallas, TX 75202-2733	AR, LA, NM, OK, TX	www.epa.gov/region6 (800) 621-8431* 214-665-7171
Region 7 901 North Fifth Street Kansas City, KS 66101	IA, KS, MO, NE	www.epa.gov/region7 (800) 223-0425 (913) 551-7566
Region 8 1595 Wynkoop St. Denver, CO 80202-1129	CO, MT, ND, SD, UT, WY	www.epa.gov/region8 (800) 227-8917* (303) 312-6460
Region 9 75 Hawthorne Street San Francisco, CA 94105	CA, AZ, HI, NV, GU, AS, MP	www.epa.gov/region9 (415) 744-1197
Region 10 1200 Sixth Ave Seattle, WA 98101	AK, ID, WA, OR	www.epa.gov/region10 (800) 424-4372* (206) 553-2117

*For sources within the region only.

For More Information

Copies of the rule and other materials are located at :
www.epa.gov/ttn/atw/area/arearules.html

United States Environmental Protection Agency
December 2007
www.epa.gov/ttn/atw/eparules.html
Office of Air Quality Planning & Standards (EI 43-02)

EPA

Summary of Regulations Controlling Air Emissions for the GLASS MANUFACTURING INDUSTRY

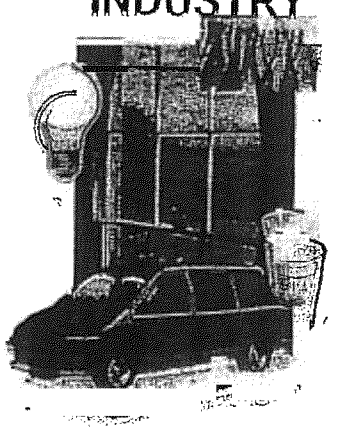

NATIONAL EMISSION STANDARDS FOR HAZARDOUS AIR POLLUTANTS NESHAP (SUBPART SSSSSS) FINAL RULE

ED_000719_00032165-00135

GLASS MANUFACTURING
(SUBPART SSSSSS)

What Is An Area Source?

- Any source that is not a major source. (A major source is a facility that emits, or has the potential to emit in the absence of controls, at least 10 tons per year (TPY) of individual hazardous air pollutants (HAP) or 25 TPY of combined HAP.)

Who Does This Rule Apply To?

- Facilities with glass manufacturing furnaces producing at least 50 tons of glass per year.

Who Is Subject To The Rule?

- Glass manufacturing plants with continuous furnaces that process urban HAP metals (As, Cd, Cr, Pb, Mn, Ni) as raw materials (not including trace materials in non-HAP raw materials such as sand).

What Am I Required To Do?

- All affected sources must meet one of two emissions limits. New and existing sources have different monitoring requirements.

The charts on the following pages explain, in detail, how all affected glass manufacturers can comply with the rule.

Initial testing requirement:

- One-time performance test on each furnace unless the furnace has been tested in the last 5 years and the previous test demonstrated compliance.

	Monitoring Requirements	
	Baghouse	ESP
Existing	Inlet temperature monitoring: record every 15 minutes and record every 8 hours	ESP monitoring of the secondary voltage and secondary electrical current to each field of the ESP; measure every 15 minutes and record every 8 hours
New	Leak detectors	Install CPMS to measure and record the secondary voltage and secondary current to each field of the ESP
All Sources	Annual inspections of furnace control devices	
	Can submit a request for alternative monitoring under §60.8 or §63.8(f)	

Emission Limits	
Pollutant	Emission Limit*
Particulate Matter	0.2 lb/ton (0.1 g/kg)
Combined Urban HAP (As, Cd, Cr, Pb, Mn, Ni)	0.02 lb/ton (0.01 g/kg)

* Pounds emitted per ton of glass produced. (Grams emitted per kilogram of glass produced.)

ED_000719_00032165-00136