United States
Environmental Protection
Agency

Office of Air Quality
Planning And Standards
Research Triangle Park, NC 27711

EPA-454/R-98-013
June 1998

AIR

EPA

LOCATING AND ESTIMATING AIR EMISSIONS FROM SOURCES OF ARSENIC AND ARSENIC COMPOUNDS

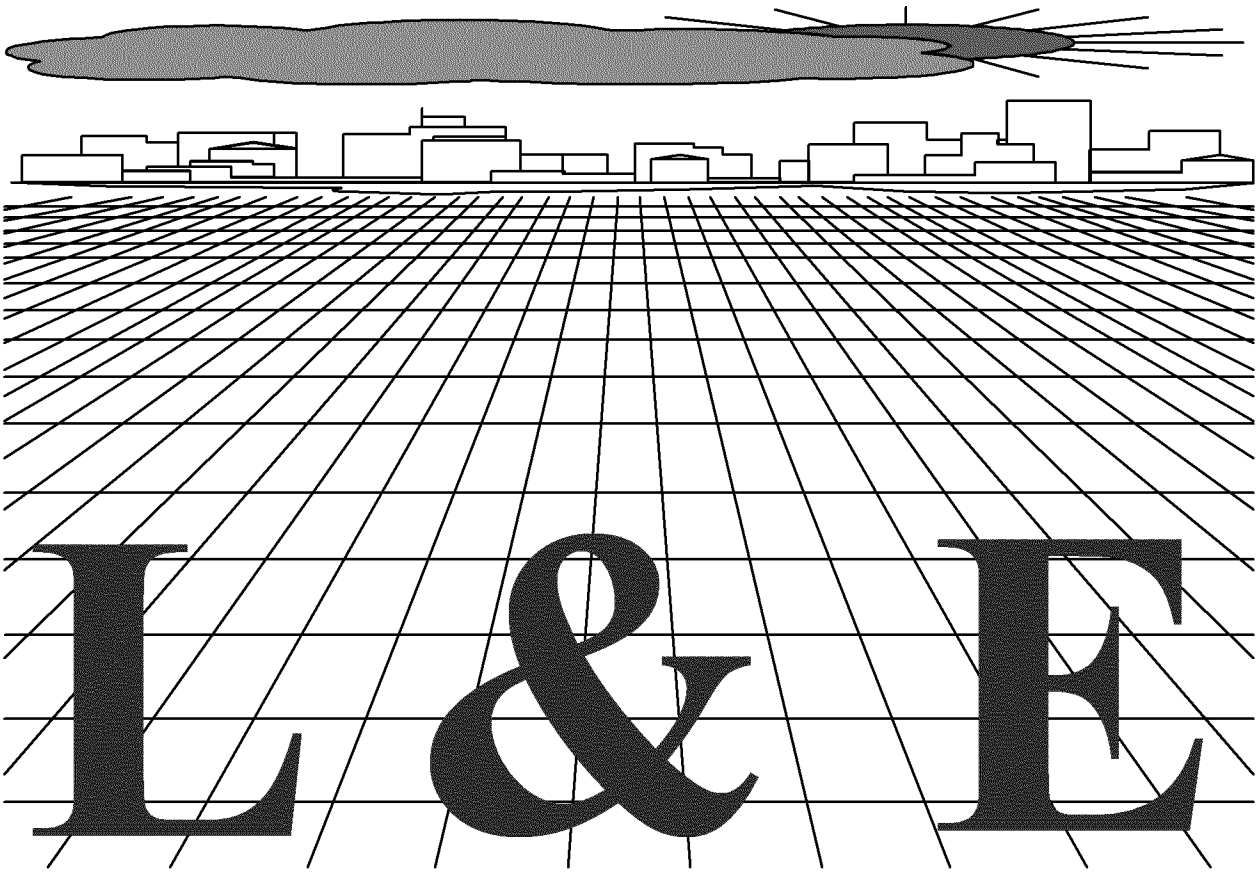

This report has been reviewed by the Office of Air Quality Planning and Standards, U.S. Environmental Protection Agency, and has been approved for publication. Mention of trade names and commercial products does not constitute endorsement or recommendation for use.

EPA-454/R-98-013

ED_000719_00032208-00002

TABLE OF CONTENTS

Section Page

LIST OF TABLES viii

LIST OF FIGURES xi

EXECUTIVE SUMMARY xiv

1.0 PURPOSE OF DOCUMENT 1-1

2.0 OVERVIEW OF DOCUMENT CONTENTS 2-1

3.0 BACKGROUND 3-1

3.1 Physical And Chemical Nature Of Arsenic And Arsenic Compounds 3-1
3.1.1 Inorganic Compounds 3-3
3.1.2 Organic Arsenic Compounds 3-10

3.2 Fate Of Arsenic 3-14
3.2.1 Fate of Arsenic in Soil 3-14
3.2.2 Fate of Arsenic in Water 3-15
3.2.3 Fate of Arsenic in Air 3-16
3.2.4 Fate of Arsenic in Plants and Food 3-16

3.3 Overview Of Production And Use 3-17
3.3.1 Metallic Arsenic 3-19
3.3.2 Arsenic Trioxide 3-19

4.0 EMISSIONS OF ARSENIC AND ARSENIC COMPOUNDS FROM COMBUSTION SOURCES 4-1

4.1 Stationary External Combustion 4-1
4.1.1 Process Descriptions for Utility, Industrial, and Commercial Fuel Combustion 4-3
4.1.2 Emission Factors for Utility, Industrial, and Commercial Fuel Combustion 4-15
4.1.3 Source Locations 4-33

4.2 Hazardous Waste Incineration 4-35
4.2.1 Process Description 4-36
4.2.2 Emission Factors 4-43
4.2.3 Source Location 4-43

ED_000719_00032208-00003

TABLE OF CONTENTS, continued

Section Page

4.3 Municipal Waste Combustion 4-45
4.3.1 Process Description 4-45
4.3.2 Emission Factors 4-52
4.3.3 Source Location 4-56

4.4 Sewage Sludge Incinerators 4-56
4.4.1 Process Description 4-56
4.4.2 Emission Factors 4-63
4.4.3 Source Location 4-66

4.5 Medical Waste Incineration 4-66
4.5.1 Process Description 4-66
4.5.2 Emission Factors 4-74
4.5.3 Source Location 4-74

4.6 Crematoriums 4-77
4.6.1 Process Description 4-77
4.6.2 Emission Factors 4-77
4.6.3 Source Locations 4-78

4.7 Stationary Internal Combustion Sources 4-78
4.7.1 Emissions 4-78
4.7.2 Source Description 4-82

5.0 EMISSIONS OF ARSENIC AND ARSENIC COMPOUNDS FROM THE METALLURGICAL INDUSTRY 5-1

5.1 Primary Lead Smelting 5-1
5.1.1 Process Description 5-1
5.1.2 Emission Control Techniques 5-4
5.1.3 Emissions 5-5

5.2 Secondary Lead Smelting 5-5
5.2.1 Process Description 5-5
5.2.2 Emission Control Techniques 5-17
5.2.3 Emissions 5-19
5.2.4 Source Locations 5-21

5.3 Primary Copper Production 5-21
5.3.1 Source Description 5-21
5.3.2 Process Description 5-23
5.3.3 Emissions 5-25

ED_000719_00032208-00004

TABLE OF CONTENTS, continued

Section Page

5.3.4 Emission Control Techniques 5-28
5.3.5 Source Location 5-30

5.4 Secondary Aluminum Operations 5-31
5.4.1 Source Description 5-31
5.4.2 Process Description 5-31
5.4.3 Emissions and Control 5-36

5.5 Ferroalloy Production 5-38
5.5.1 Source Description 5-38
5.5.2 Process Description 5-39
5.5.3 Emissions and Controls 5-45

5.6 Iron and Steel Foundries 5-47
5.6.1 Process Description 5-47
5.6.2 Emission Control Techniques 5-52
5.6.3 Emission Factors 5-52
5.6.4 Source Locations 5-52

6.0 EMISSIONS OF ARSENIC AND ARSENIC COMPOUNDS FROM THE PULP AND PAPER INDUSTRY 6-1

6.1 Kraft Recovery Furnaces And Smelt-Dissolving Tanks 6-1
6.1.1 Process Description 6-1
6.1.2 Emission Factors 6-7
6.1.3 Source Locations 6-7

6.2 Lime Kilns 6-7
6.2.1 Process Description 6-7
6.2.2 Emission Factors 6-11
6.2.3 Source Locations 6-11

6.3 Sulfite Recovery Furnaces 6-11
6.3.1 Process Description 6-11
6.3.2 Emission Factors 6-14
6.3.3 Source Locations 6-14

7.0 EMISSIONS OF ARSENIC AND ARSENIC COMPOUNDS FROM OTHER SOURCES 7-1

7.1 Glass Manufacturing 7-1
7.1.1 Process Description 7-2

ED_000719_00032208-00005

TABLE OF CONTENTS, continued

Section		Page
	7.1.2 Emission Control Techniques	7-3
	7.1.3 Emissions	7-3
7.2	Municipal Solid Waste Landfills	7-4
	7.2.1 Process Description	7-4
	7.2.2 Emission Control Techniques	7-5
	7.2.3 Emission Factors	7-6
	7.2.4 Source Locations	7-6
7.3	Asphalt Concrete	7-6
	7.3.1 Process Description	7-6
	7.3.2 Emission Control Techniques	7-14
	7.3.3 Emission Factors	7-14
	7.3.4 Source Locations	7-14
7.4	Abrasive Grain Processing	7-16
	7.4.1 Process Description	7-16
	7.4.2 Emission Control Techniques	7-19
	7.4.3 Emission Factors	7-19
	7.4.4 Source Locations	7-20
7.5	Portland Cement Production	7-20
	7.5.1 Process Description	7-21
	7.5.2 Emission Control Techniques	7-24
	7.5.3 Emission Factors	7-25
	7.5.4 Source Locations	7-26
7.6	Open Burning Of Scrap Tires	7-33
	7.6.1 Process Description	7-33
	7.6.2 Emission Factors	7-33
	7.6.3 Source Location	7-33
7.7	Grain Milling	7-34
7.8	Process Heaters	7-35
7.9	Cotton Production and Ginning	7-38
8.0	SOURCE TEST PROCEDURES	8-1
8.1	Ambient Air Sampling Methods	8-2

ED_000719_00032208-00006

TABLE OF CONTENTS, continued

Section Page

8.1.1 Methodology for the Determination of Suspended Particulate Matter in the Atmosphere (High-Volume Method) and Modified Methodology for the Determination of Lead in Suspended Particulate Matter Collected from Ambient Air 8-2
8.1.2 NIOSH Method 7300 - Methodology for the Determination of Elements by Inductively Coupled Plasma (ICP) 8-4
8.1.3 NIOSH Method 7900 - Methodology for the Determination of Arsenic and Compounds, as Arsenic, using Direct-Aspiration (Flame) Atomic Absorption Spectroscopy (AAS) 8-5
8.1.4 NIOSH Method 7901 - Methodology for the Determination of Arsenic Trioxide, as Arsenic, by Graphite Furnace Atomic Absorption (GFAA) 8-5
8.1.5 NIOSH Method 5022 - Methodology for the Determination of Organo-Arsenic Compounds by Ion Chromatography (IC)/Graphite Furnace Atomic Absorption (GFAA) 8-6

8.2 Stationary Source Sampling Methods 8-6
8.2.1 EPA Method 29 - Determination of Metals Emissions from Stationary Sources 8-7
8.2.2 EPA Method 108 - Methodology for the Determination of Particulate and Gaseous Arsenic Emissions 8-9
8.2.3 EPA BIF Method Section 3.0 - Methodology for the Determination of Metals Emissions in Exhaust Gases from Hazardous Waste Incineration and Similar Combustion Processes 8-9
8.2.4 CARB Method 423 - Methodology for the Determination of Particulate and Gaseous Inorganic Arsenic Emissions from Stationary Sources 8-11
8.2.5 CARB Draft Method 436 - Determination of Multiple Metals Emissions from Stationary Sources 8-11

8.3 Analytical Techniques For The Measurement Of Arsenic 8-11
8.3.1 Direct Aspiration (Flame) Atomic Absorption Spectroscopy (AAS) . 8-12
8.3.2 Graphite Furnace Atomic Absorption (GFAA) Spectroscopy 8-12
8.3.3 Inductively Coupled Plasma (ICP) Atomic Emission Spectroscopy . . 8-13
8.3.4 Hydride Generation Atomic Absorption (HGAA) Spectroscopy 8-13
8.3.5 Ion Chromatography (IC)/GFAA 8-14

APPENDICES

Appendix A - Emission Factor Summary Table A-1

LIST OF TABLES

Table		Page
3-1	Physical Properties of Arsenic	3-2
3-2	Important Arsenic-Bearing Minerals	3-3
3-3	Common Arsenic Compounds	3-4
3-4	Physical Properties of Arsenic Halides	3-6
3-5	Physical Properties of Common Arsenic Sulfides	3-9
3-6	Organic Arsenic Compounds	3-11
3-7	U.S. Imports for Consumption of Arsenicals, by Country	3-18
4-1	Arsenic Emission Factors for Wood Waste-Fired Utility Boilers	4-18
4-2	Arsenic Emission Factors for Wood Waste-Fired Industrial Boilers	4-19
4-3	Arsenic Emission Factors for Wood Waste-Fired Commercial/Institutional Boilers	4-21
4-4	Arsenic Emission Factors for Coal-Fired Utility Boilers	4-23
4-5	Arsenic Emission Factors for Coal-Fired Industrial Boilers	4-25
4-6	Arsenic Emission Factors for Coal-Fired Commercial/Institutional Boilers	4-27
4-7	Arsenic Emission Factors for Oil-Fired Utility Boilers	4-28
4-8	Arsenic Emission Factors for Oil-Fired Industrial Boilers	4-29
4-9	Arsenic Emission Factors for Oil-Fired Commercial/Institutional Boilers	4-30
4-10	Arsenic Emission Factors for Waste Oil-Fired Industrial Boilers	4-31
4-11	Arsenic Emission Factors for Waste Oil-Fired Commercial/Institutional Boilers	4-32
4-12	Arsenic Emission Factors for Solid Waste-Fired Utility Boilers	4-34
4-13	Arsenic Emission Factors for Hazardous Waste Incineration	4-44
4-14	Arsenic Emission Factors for Municipal Waste Combustion Sources	4-53

ED_000719_00032208-00008

LIST OF TABLES, continued

Table		Page
4-15	Summary of Geographical Distribution of MWC Facilities (1997)	4-57
4-16	Arsenic Emission Factors for Sewage Sludge Incinerator Sources	4-64
4-17	Arsenic Emission Factors for Medical Waste Incinerator Sources	4-75
4-18	Arsenic Emission Factor for Crematories	4-79
4-19	1991 U.S. Crematory Locations by State	4-80
4-20	Arsenic Emission Factors for Internal Combustion Engines	4-81
5-1	Domestic Primary Lead Smelters And Refineries	5-2
5-2	Arsenic Emission Factor for Primary Lead Smelting Facilities	5-6
5-3	Arsenic Emission Factors for Secondary Lead Smelting Facilities	5-20
5-4	U.S. Secondary Lead Smelters Grouped According to Annual Lead Production Capacity	5-22
5-5	Arsenic Emission Factors for Primary Copper Smelting Facilities	5-27
5-6	Primary Copper Smelters in the United States	5-30
5-7	Arsenic Emission Factors for Secondary Aluminum Production	5-37
5-8	Ferroalloy Processes and Respective Product Groups	5-40
5-9	Arsenic Emission Factors for Electric Arc Furnaces	5-46
5-10	Arsenic Emission Factors for Iron and Steel Foundries	5-53
6-1	Arsenic Emission Factors for Kraft Process Recovery Furnaces and Smelt Dissolving Tanks	6-8
6-2	Distribution of Kraft Pulp Mills in the United States (1997)	6-9
6-3	Arsenic Emission Factors for Lime Kilns	6-12
6-4	Arsenic Emission Factors for Sulfite Process Recovery Furnaces	6-15

ED_000719_00032208-00009

LIST OF TABLES, continued

Table		Page
6-5	Distribution of Sulfite Pulp Mills in the United States (1997)	6-15
7-1	Other Sources of Arsenic Emissions	7-2
7-2	Arsenic Emission Factor for Glass Manufacturing	7-4
7-3	Arsenic Emission Factor for Landfill Process Gas	7-7
7-4	Arsenic Emission Factors from Asphalt Concrete Production	7-15
7-5	Arsenic Emission Factor for Abrasive Grain Processing	7-20
7-6	1995 U.S. Primary Abrasive Grain Manufacturer Locations by State	7-21
7-7	Arsenic Emission Factors for Dry Process Portland Cement Kilns by Fuel and Waste Type	7-26
7-8	Arsenic Emission Factors for Portland Cement Manufacturing Facilities	7-27
7-9	Portland Cement Production Facilities (1995)	7-28
7-10	Arsenic Emission Factors for Open Burning of Scrap Tires	7-34
7-11	Arsenic Emission Factors for Grain Milling	7-36
7-12	Arsenic Emission Factors for Process Heaters	7-37
A-1	Summary of Emission Factors by Source Classification Codes	A-1

ED_000719_00032208-00010

LIST OF FIGURES

Figure		Page
4-1	Simplified Boiler Schematic	4-4
4-2	Single Wall Fired Boiler	4-6
4-3	Simplified Atmospheric Fluidized Bed Combustion Process Flow Diagram	4-8
4-4	Spreader Type Stoker-Fired Boiler	4-9
4-5	Typical Process Component Options in a Hazardous Waste Incineration Facility	4-37
4-6	Typical Liquid Injection Combustion Chamber	4-38
4-7	Typical Rotary Kiln/Afterburner Combustion Chamber	4-40
4-8	Typical Fixed-Hearth Combustion Chamber	4-41
4-9	Typical Mass Burn Waterwall Combustor	4-46
4-10	Simplified Process Flow Diagram, Gas Cycle for a Mass Burn/Rotary Waterwall Combustor	4-47
4-11	Mass Burn Refractory-Wall Combustor with Grate/Rotary Kiln	4-48
4-12	Typical RDF-Fired Spreader Stoker Boiler	4-50
4-13	Typical Modular Starved-Air Combustor with Transfer Rams	4-51
4-14	Typical Multiple-Hearth Furnace	4-59
4-15	Fluidized Bed Combustor	4-61
4-16	Controlled-Air Incinerator	4-68
4-17	Excess Air Incinerator	4-70
4-18	Rotary Kiln Incinerator	4-72
5-1	Typical Primary Lead Processing Scheme	5-3
5-2	Simplified Process Flow Diagram for Secondary Lead Smelting	5-8
5-3	Cross-Sectional View of a Typical Stationary Reverberatory Furnace	5-10

ED_000719_00032208-00011

LIST OF FIGURES, continued

Figure		Page
5-4	Cross-Section of a Typical Blast Furnace	5-13
5-5	Side View of a Typical Rotary Reverberatory Furnace	5-15
5-6	Cross-Sectional View of an Electric Furnace for Processing Slag	5-18
5-7	Typical Primary Copper Smelter Flow Sheet	5-24
5-8	Copper Converter	5-26
5-9	Fugitive Emission Sources at Primary Copper Smelters	5-29
5-10	Typical Process Diagram for Pretreatment in the Secondary Aluminum Processing Industry	5-32
5-11	Typical Process Flow Diagram for the Secondary Aluminum Processing Industry	5-33
5-12	Typical Ferroalloy Production Process	5-41
5-13	Typical Submerged Arc Furnace Design	5-43
5-14	Process Flow Diagram for a Typical Sand-Cast Iron and Steel Foundry	5-49
5-15	Emission Points in a Typical Iron and Steel Foundry	5-50
6-1	Typical Kraft Pulping and Recovery Process	6-2
6-2	Direct Contact Evaporator Recovery Boiler	6-4
6-3	Nondirect Contact Evaporator Recovery Boiler	6-5
6-4	Process Flow Diagram for Lime Kiln	6-10
6-5	Process Diagram for Magnesium-Based Sulfite Pulping and Chemical Recovery	6-13
7-1	General Process Flow Diagram for Batch-Mix Asphalt Paving Plants	7-9
7-2	General Process Flow Diagram for Drum-Mix Asphalt Paving Plants	7-12
7-3	General Process Flow Diagram for Counterflow Drum-Mix Asphalt Paving Plants	7-13

ED_000719_00032208-00012

LIST OF FIGURES, continued

Figure		Page
7-4	Flow Diagram for Abrasive Grain Processes	7-18
7-5	Process Flow Diagram Of Portland Cement Manufacturing Process	7-22
8-1	Components of a High-Volume Ambient Air Sampler for Arsenic	8-3
8-2	EPA Method 29, BIF Method, and CARB Draft Method 436 Sampling Train	8-8
8-3	EPA Method 108 and CARB Method 423 Sampling Train	8-10

ED_000719_00032208-00013

EXECUTIVE SUMMARY

The 1990 Clean Air Act Amendments contain a list of 188 hazardous air pollutants (HAPs) which the U.S. Environmental Protection Agency must study, identify sources of, and determine if regulations are warranted. Of these HAPs, arsenic and arsenic compounds are the subject of this document. This document describes the properties of arsenic and arsenic compounds as air pollutants, defines production and use patterns, identifies source categories of air emissions, and provides emission factors┼ffiffi6JGffiFQEVOGPVffKUffiOffiRCTVffiQHffiOPffiQPIQKPIffi'2#ffiUGTKGU FGUKIPGFffVQffiOUUKOVffVJGffiIGFGTONffiRVDNKEffiOVffNCTIG┼ffiDVVffiRTKOCTKN[ffi5VOGKNCEONffiOKTffiCIGPEKGU┼ffiKP KFGPVKH[KPIffiUQVTEGUffiQHffi*#2UffiOPFffiFGXGNQRKPIffiGOKUUKQPUffiGUKOCOGU┼

#TUGPKEffKUffiGOXVGFffiOUffiOPffiOKTffiRQNVVOPVffHTQOffiGZVGTPONffiEQODVUVKQPffiDQMNGTU┼ffiOVPKEKRONffiOPF JC\CTFQVUffiYOUVGffKPEKPGTOVKQP┼ffiRTKOCT[ffiEQRRGTffiOPFffi\KPEffiUOGNKPI┼ffiINCUUffiOCPVVOEVVTKPI┼ffiEQRRGT QTGffiOKPKPI┼ffiOPFffiRTKOCT[ffiOPFffiUGEQPFCT[ffNGCFffiUOGNKPI┼ffiffiffi'OKUUKQPUffiQHffiOTUGPKEffHTQOffVJGUG CEVKXXKGUffiOTGffiFVGffVQffVJGffiRTGUGPEGffiQHffVTCEGffiOOQVPVUffiQHffiOTUGPKEffKPffHVGNUffiOPFffiOOVGTKONUffiDGKPI RTQEGUUGF┼ffiffi+PffiUVEJffiEOUGU┼ffVJGffiGOKUUKQPUffiOC[ffiDGffiSVKGffiXCTKCDNGffiDGEOVUGffVJGffVTCEGffiRTGUGPEGffiQH CTUGPKEffKUffiPQVffiEQPUVOPV┼ffiffi(QTffKPUVOPEG┼ffVJGffiEQPEGPVTOVKQPffiQHffiOTUGPKEffKPffiEQONffiEOPffiXCT[ffiD[ffHQVT QTFGTUffiQHffiOCIPKVVFG┼ffiffi#TUGPKEffGOKUUKQPUffiONUQffiQEEVTffHTQOffiOITKEVNVVTONffiEJGOKEONffiRTQFVEVKQPffiOPF CRRNKECVKQP┼ffiOPFffiONUQffHTQOffiOGVONffiRTQEGUUKPIffiFVGffVQffVJGffVUGffiQHffiOTUGPKEffKPffVJGUGffiOEVKXXKGU┼

+PffiOFFKVKQPffVQffVJGffiOTUGPKEffUQVTEGffKPHQTOOVKQP┼ffKPHQTOOVKQPffKUffiRTQXKFGFffVJOVffURGEKHKGUffiJQY KPFKXKFVONffUQVTEGUffiQHffiOTUGPKEffiOC[ffiDGffVGUVGFffVQffiSVOPVKH[ffiOKTffGOKUUKQPU┼

SECTION 1.0
PURPOSE OF DOCUMENT

The Environmental Protection Agency (EPA) and State and local air pollution control agencies are becoming increasingly aware of the presence of substances in the ambient air that may be toxic at certain concentrations. This awareness has led to attempts to identify source/receptor relationships for these substances and to develop control programs to regulate toxic emissions.

To assist groups interested in inventorying air emissions of various potentially toxic substances, EPA is preparing a series of documents that compiles available information on sources and emissions. Existing documents in the series are listed below.

5/\/DJ\/CPEG	' 2 # ffi 2/\/DNKEC\/KQPffi 0/\/\/ODGT
#ET[NQPKVTKNG	' 2 #⌧┤↕◀┌⌧→┐⌧↕├C
$GP\GPG	' 2 #⌧┤↕◀4⌧→⌧!!!!
$/\/CPKGPG	' 2 #⌧┤┐◀4⌧←↑⌧↕→
%CFCK/\/O	' 2 #⌧┤┐◀4⌧←┴⌧┐↕
%CTDQPffi 6G/TCE.JNQTKFG	' 2 #⌧┤↕◀┌⌧→┐⌧↕├D
%.JNQTQDGP\GPGffi/\/RFC\/G	' 2 #⌧┤┐◀4⌧←┴⌧┐┐
%.JNQTQHQTO	' 2 #⌧┤↕◀┌⌧→┐⌧↕├E
%JTQCK/\/Offi L/\/RRNGOCPV	' 2 #⌧┤↕◀¶⌧→←⌧↕¶
%JTQCK/\/O	' 2 #⌧┤↕◀┌⌧→┐⌧↕├I
%QDNffiCPFffi 1KNffi%QODW\/CKQPffi 5QW\/TEGJ	' 2 #⌧┤↕◀¶⌧→←⌧↕!!
%[CPKFGffi%QORQW\/PFU	' 2 #⌧┤┐◀4⌧←┴⌧┐!!
&KQZKPUffiCPFffi (\/TCPU	' 2 #⌧┤┐◀4⌧←├⌧↕┴
' RKE.JNQTQJ[FTKP	' 2 #⌧┤↕◀┌⌧→┐⌧↕├L
'\/J[NGPGffi &KE.JNQTKFG	' 2 #⌧┤↕◀┌⌧→┐⌧↕├F
'\/J[NGPGffi 1ZKFG	' 2 #⌧┤↕◀┌⌧→┐⌧↕├N

ED_000719_00032208-00015

5WDUVCPEG	'2#ffi2WDNKECVKQPffi0WVODGT
(QTOCNFGJ[FG	'2#☼┤↕◀┬☼←‼☼↕‼¶
.GCF	'2#☼┤┬◀4☼→☼↕↕↑
/CPICPGUG	'2#☼┤↕◀┬☼→┬☼↕↕├J
/GFKECNffi9CUVGffi+PEKPGTCVQTU	'2#☼┤┬◀4☼←┴☼↕┤┴
/GTEWT[ffiCPFffi/GTEWT[ffi%QORQWPFU	'2#☼┤┴◀4☼←┴☼↕¶┴
/GVJ[Nffi%JNQTQHQTO	'2#☼┤┬◀4☼←┴☼↕┬┤
/GVJ[Nffi'VJ[Nffi-GVQPG	'2#☼┤┬◀4☼←┴☼↕┬↑
/GVJ[NGPGffi%JNQTKFG	'2#☼┤┬◀4☼←┴☼↕↕↑
/WPKEKRCNffi9CUVGffi%QODWDVQTU	'2#☼┤↕◀¶☼→←☼↕↕↑
0KEVGN	'2#☼┤↕◀┬☼→┬☼↕↕├H
2GTEJNQTQGVJ[NGPGffiCPF	'2#☼┤↕◀¶☼→←☼↕‼┴
6TKEJNQTQGVJ[NGPG	
2JQUIGPG	'2#☼┤↕◀┬☼→┬☼↕↕├K
2QN[EJNQTKPCVGFffi$KRJGP[NUffi2%$U♂ffi	'2#☼┤↕◀┬☼→┬☼↕↕├P
2QN[E[ENKEffi1TICPKEffi/CVGTffi21/♂ffi	'2#☼┤↕◀┬☼→┬☼↕↕├R
5GYCIGffi5NWFIGffi+PEKPGTCVQTU	'2#☼┤↕◀¶☼←↕☼↕↕←
5V[TGPG	'2#☼┤┬◀4☼←┴☼↕‼‼
6QWVGPG	'2#☼┤┬◀4☼←┴☼↕┬├
8KP[NKFGPGffi%JNQTKFG	'2#☼┤↕◀┬☼→┬☼↕↕├M
:[NGPGU	'2#☼┤┬◀4☼←┴☼↕┬→

ffi

This document deals specifically with arsenic and arsenic compounds. Its intended audience includes Federal, State and local air pollution personnel and others who are interested in locating potential sources of arsenic and arsenic compounds and in making gross emission estimates of these air pollutants.

With the 1990 Amendments to the Clean Air Act (CAA), arsenic and arsenic compounds were both recognized for their toxic characteristics and added to the list of hazardous air pollutants (HAPs) presented in Section 112(d) to be evaluated in the development of maximum achievable control technology (MACT) standards. In addition, many States also recognize arsenic and arsenic compounds as toxic pollutants, and some States may impose their own regulations, which can be more stringent than the federal ones.

Arsenic air emissions have also been affected by regulatory activity from other agencies--including the Occupational Safety and Health Administration (OSHA), where regulations for reducing arsenic exposure to a variety of worker categories are in effect.

A concerted effort was made during the development of this document to coordinate with the current work that is underway at the Office of Air Quality Planning and Standards (OAQPS) in developing MACT standards. Data were also available from National Emission Standard for Hazardous Air Pollutants (NESHAP) project files for the regulations pertaining to arsenic emissions from glass manufacturing plants, primary copper smelters, and arsenic trioxide and metallic arsenic production facilities.

Also, as a result of the California "Hot Spots" program and other State source testing efforts (where such information is available through EPA's Source Test Information Retrieval System [STIRS] database and its Factor Information Retrieval [FIRE] System), data have been documented from source tests performed to demonstrate, among other reasons, permit applicability. Such programs have been valuable for acquiring source-specific emissions data.

However, despite the data generated by these programs, the available data on some potential sources of arsenic emissions are limited and the configurations of many sources will not be the same as those described in this document. Therefore, this document is best used as a primer to inform air pollution personnel about: (1) the types of sources that may emit arsenic, (2) process variations that may be expected within these sources, and (3) available emissions information that indicates the potential for arsenic to be released into the air from each operation.

The reader is strongly cautioned against using the emission factors or emissions information contained in this document to try to develop an exact assessment of emissions from any particular facility. Available data are insufficient to develop statistical estimates of the accuracy of these emission factors, so no estimate can be made of the error that could result when these factors are used to calculate emissions from any given facility. It is possible, in some cases, that order-of-magnitude differences could result between actual and calculated emissions, depending on differences in source configurations, control equipment, and operating practices.

Thus, in situations where an accurate assessment of arsenic emissions is necessary, source-specific information should be obtained to confirm the existence of particular emitting operations, the types and effectiveness of control measures, and the impact of operating practices. A source test should be considered as the best means to determine air emissions directly from a facility or operation.

As standard procedure, L&E documents are sent to government, industry, and environmental groups wherever EPA is aware of expertise. These groups are given the opportunity to review a document, comment, and provide additional data where applicable. Although this document has undergone extensive review, there may still be shortcomings. Comments subsequent to publication are welcome and will be addressed based on available time and resources. In addition, any comments on the contents or usefulness of this document are welcome, as is any information on process descriptions, operating practices, control measures, and emissions information that would enable EPA to update and improve the document's contents. All comments should be sent to:

Group Leader
Emission Factor and Inventory Group (MD-14)
U. S. Environmental Protection Agency
Research Triangle Park, North Carolina 27711

SECTION 2.0
OVERVIEW OF DOCUMENT CONTENTS

This section briefly outlines the nature, extent, and format of the material presented in the remaining sections of this report.

Section 3.0 provides a brief summary of the physical and chemical characteristics of arsenic and arsenic compounds and an overview of their production, uses, and emission sources. This background section is useful in developing a general perspective on arsenic, how it is produced and consumed, and identifies potential sources of arsenic emissions.

Section 4.0 describes various combustion source categories where arsenic emissions have been reported. For each type of combustion source, a description(s) of the combustor is given and potential arsenic emission points are identified on diagrams. Emission factors for potential arsenic emissions, before and after controls, are given where available.

Section 5.0 focuses on air emissions of arsenic from the metallurgical industry. For each major production source category described in Section 5.0, a list of individual companies identified in that particular industry is provided. An example process description and a flow diagram with potential arsenic emission points are provided. Emission factors for potential arsenic emissions, before and after controls employed by industry, are given where available.

Section 6.0 describes arsenic emissions from the pulp and paper industry. Process descriptions, emissions, and associated control techniques from kraft recovery furnaces, smelt dissolving tanks, lime kilns, and sulfite recovery furnaces are described.

Section 7.0 summarizes other source categories that use arsenic and arsenic compounds in their processes and emit arsenic or source categories whose raw materials contain arsenic that is emitted in the manufacturing process. The source categories discussed here include the production of glass, agricultural chemicals, wood preservers, lead pencils and art goods, prepared feeds, and Portland cement. Limited information on many of these sources is available; therefore, varying levels of detail on the processes, emissions, and controls are presented. Locations of facilities in each source category are provided, where available.

Section 8.0 summarizes available procedures for source sampling and analysis of arsenic. This section provides an overview of applicable sampling procedures and cites references for those interested in conducting source tests.

Appendix A presents a summary table of the emission factors contained in this document. This table also presents the factor quality rating and the Source Classification Code (SCC) or Area/Mobile Source (AMS) code associated with each emission factor.

Each emission factor listed in Sections 4.0 through 7.0 was assigned an emission factor rating (A, B, C, D, E, or U) based on the criteria for assigning data quality ratings and emission factor ratings as required in the document *Procedures for preparing Emission Factor Documents*.[1] The criteria for assigning the data quality ratings to source tests are as follows:

A - Tests are performed by using an EPA reference test method, or when not applicable, a sound methodology. Tests are reported in enough detail for adequate validation, and, raw data are provided that can be used to duplicate the emission results presented in the report.

B - Tests are performed by a generally sound methodology, but lacking enough detail for adequate validation. Data are insufficient to completely duplicate the emission result presented in the report.

C - Tests are based on an unproven or new methodology, or are lacking a significant amount of background information.

D - Tests are based on generally unacceptable method, but the method may provide an order-of-magnitude value for the source.

Once the data quality ratings for the source tests had been assigned, these ratings along with the number of source tests available for a given emission point were evaluated. Because of the almost impossible task of assigning a meaningful confidence limit to industry-specific variables (e.g., sample size vs. sample population, industry and facility variability, method of measurement), the use of a statistical confidence interval for establishing a representative emission factor for each source category was not practical. Therefore, some subjective quality rating was necessary. The following quality ratings were used in the emission factor tables in this document:

A - Excellent. Emission factor is developed primarily from A- and B-rated source test data taken from many randomly chosen facilities in the industry population. The source category population is sufficiently specific to minimize variability.

B - Above average. Emission factor is developed primarily from A- or B-rated test data from a moderate number of facilities. Although no specific bias is evident, it is not clear if the facilities tested represent a random sample of the industry. As with the A rating, the source category population is sufficiently specific to minimize variability.

C - Average. Emission factor is developed primarily from A-, B-, and C-rated test data from a reasonable number of facilities. Although no specific bias is evident, it is not clear if the facilities tested represent a random sample of the industry. As with the A rating, the source category population is sufficiently specific to minimize variability.

D - Below average. Emission factor is developed primarily form A-, B-, and C-rated test data from a small number of facilities, and there may be reason to suspect that these facilities do not represent a random sample of the industry. There also may be evidence of variability within the source population.

E - Poor. Factor is developed from C- rated and D-rated test data from a very few number of facilities, and there may be reasons to suspect that the facilities tested do not represent a random sample of the industry. There also may be evidence of variability within the source category population.

U - Unrated (Only used in the L&E documents). Emission factor is developed from source tests which have not been thoroughly evaluated, research papers, modeling data, or other sources that may lack supporting documentation. The data are not necessarily "poor," but there is not enough information to rate the factors according to the rating protocol.

This document does not contain any discussion of health or other environmental effects of arsenic, nor does it include any discussion of ambient air levels.

References For Section 2.0

1. *Procedures for Preparing Emission Factor Documents*. EPA-454/R-95-015. Research Triangle Park, North Carolina: U.S. Environmental Protection Agency, Office of Air Quality Planning and Standards, October 1997.

2. Factor Information Retrieval (FIRE) System, Version 4.0. Research Triangle Park, North Carolina: U.S. Environmental Protection Agency, Office of Air Quality Planning and Standards, June 1995.

SECTION 3.0
BACKGROUND

3.1 Physical And Chemical Nature Of Arsenic And Arsenic Compounds

Elemental arsenic (As, Chemical Abstract Service [CAS] No. 7440-38-2) is a silver-gray crystalline metallic solid that exhibits low thermal conductivity. Although arsenic is often referred to as a metal, it is classified chemically as a nonmetal or metalloid belonging to Group 15 (VA) of the periodic table. The principal valances of arsenic are +3, +5 and -3. Only one stable isotope of arsenic having mass 75 (100 percent natural abundance) has been observed. Arsenic typically exists in the (alpha)-crystalline metallic form which is steel-gray in appearance and brittle in nature, and in the beta-form, a dark gray amorphous solid.[1] "Metallic" arsenic remains stable in dry air, but its surface will oxidize when exposed to humid air, creating a superficial golden bronze tarnish that turns black upon prolonged exposure. The physical properties of arsenic are presented in Table 3-1.[1]

Arsenic is found widely in nature, most often combined with oxygen, chlorine and sulfur. It is found in trace quantities in all living things, the atmosphere, water and geological formations.[2] It is usually found in ores containing gold, silver, cobalt, nickel, and antimony.[3] There are over 150 known arsenic-bearing minerals. Table 3-2 lists some of the more common minerals.[1] The most significant source of commercial arsenic is a byproduct from the treatment of copper, lead, cobalt and gold ores. The amount of arsenic found in lead and copper ores may range from a trace to 2 to 3 percent.[1] Commercial end uses of arsenic include the following: wood preservatives (e.g., chromium copper arsenate); electronics (e.g., semiconductors); medicinals and botanicals; agriculture products (e.g., fungicides, herbicides, pesticides, and silvicides); desiccants; nonferrous alloys; animal feed additives; glass; ceramics; and dyeing and

TABLE 3-1. PHYSICAL PROPERTIES OF ARSENIC

Property	Value
Atomic weight	74.92
Melting point (at 39.1 MPa)[a]	816(C
Boiling point	615(C[b]
Specific gravity (26(C)	5,778 kg/m^3
Specific heat	24.6 J/(mo#K)[c]
Latent heat of fusion	27,740 J/(mo#K)[c]
Latent heat of sublimation	31,974 J/(mo#K)[c]
Linear coefficient of thermal expansion (20(C)	5.6 µm/(m#(C)
Electrical resistivity (0(C)	26 µ6/cm
Crystal system	hexagonal (rhombohedral)
Lattice constants (26(C, mm)	a = 0.376 e = 1.0548

Source: Reference 1.

[a] To convert MPa to psi multiply by 145.
[b] Sublimes.
[c] To convert to cal/(mol#K) divide by 4.184.

printing. Inorganic arsenic occurs naturally in many kinds of rocks. It is most commonly found with sulfide ores as arsenopyrite.[4] Arsenic combined with carbon and hydrogen is classified as organic arsenic. Inorganic and organic arsenic compounds are typically white to colorless powders that do not evaporate, and have no smell or special taste. Metallic arsenic, which is not naturally-occurring, can be extracted from the flue-dust of copper and lead smelters in the form of arsenic trioxide or white arsenic, which can then be reduced with charcoal to produce metallic arsenic. The elemental, metallic form of arsenic is used as an alloying additive for metals (especially lead and copper shot), battery grids, cable sheaths, and boiler tubes. The high-purity or semiconductor grade of metallic arsenic is used in the manufacture of electronic products. The various classes of inorganic and organic arsenic compounds are discussed below. Table 3-3

TABLE 3-2. IMPORTANT ARSENIC-BEARING MINERALS

Mineral	CAS No.	Arsenic Content, %
Arsenopyrite (FeAsS)	1303-18-0	46
Lollingite ($FeAs_2$)	12255-65-1	73
Orpiment	12255-89-9	61
Realger	12044-30-3	70
Native Arsenic	7440-38-2	90 - 100

5QWTEG4GHGTGPÉG

presents a summary of the chemical formulas and end uses of the most commonly used arsenic compounds.[5]

3.1.1 Inorganic Compounds

Arsenic Hydrides

The primary binary compound of arsenic and hydrogen is arsine ("arsenic hydride"). It is the only known hydrogen compound of arsenic. Arsine is a colorless, very poisonous gas that exhibits an unpleasant garlic like odor. It is formed when any inorganic arsenic-bearing material is brought in contact with zinc and sulfuric acid. It can be accidentally formed by the reaction of arsenic impurities in commercial acids stored in metal tanks. Arsine is not particularly stable and begins to decompose into its elements below 572(F. In the presence of moisture, light can affect the decomposition. Arsine is capable of reducing many substances. For example, it precipitates metallic silver from silver nitrate solution. The pure gas is stable at normal temperature. While it is not oxidized by air at room temperature, it can be ignited with the formation of arsenic, arsenic trioxide, or arsenic pentoxide, depending upon the supply of air. Arsine is used as a dopant in the semiconductor industry,[3] and is used to produce gallium arsenide, GaAs, which is used in the field of optoelectronic and microwave devices.

TABLE 3-3. COMMON ARSENIC COMPOUNDS

Compound	Chemical Formula or Description	Uses
Arsenic acid	$H_3AsO_4 \cdot 0.5H_2O$	Manufacture of arsenates, glass making, wood treating process, defoliant (regulated), desiccant for cotton, soil sterilant.
Arsenic disulfide	As_2S_2	Leather industry, depilatory agent, paint pigment, shot manufacture, pyrotechnics, rodenticide, taxidermy.
Arsenic pentafluoride	AsF_5	Doping agent in electroconductive polymers.
Arsenic pentasulfide	As_2S_5	Paint pigments, light filters, other arsenic compounds.
Arsenic pentoxide	As_2O_5	Arsenates, insecticides, dyeing and printing, weed killer, colored glass, metal adhesives.
Arsenic thioarsenate	$As(AsS_4)$	Scavenger for certain oxidation catalysts and thermal protectant for metal-bonded adhesives and coating resins.
Arsenic tribromide	$AsBr_3$	Analytical chemistry, medicine.
Arsenic trichloride	$AsCl_3$	Intermediate for organic arsenicals (pharmaceuticals, insecticides), ceramics.
Arsenic trifluoride	AsF_3	Fluorinating reagent, catalyst, ion implantation source, and dopant.
Arsenic trioxide	As_2O_3	Pigments, ceramic enamels, aniline colors, decolorizing agent in glass, insecticide, rodenticide, herbicide, sheep and cattle dip, hide preservative, preparation of other arsenic compounds.
Arsenic trisulfide	As_2S_3	Pigment, reducing agent, pyrotechnics, glass used for infrared lenses, semiconductors, hair removal from hides.
Arsenic hydride (arsine)	AsH_3	Organic synthesis, military poison, doping agent for solid-state electronic compounds.

Source: Reference 5.

Other Arsenic Hydrides

In general, arsenides have little commercial uses. While some arsenides have a defined composition, others are mixtures. Many arsenides occur in nature, and some of the naturally occurring arsenides include Cu_3As (domeykite), $FeAs_2$ (lollingite), $NiAs_2$ (chloanthite), NiAs (niccolite), and $CoAs_2$ (smaltite). Diarsine, As_2H, is a byproduct that occurs from the preparation of arsine by treatment of a magnesium aluminum arsenide alloy with dilute sulfuric acid. It can also occur by passing arsine at low pressure through an ozonizer-type discharge tube. As a gas, diarsine is fairly stable, but rather unstable in condensed phases.

Arsenic Halides

While arsenic forms a complete series of trihalides, only arsenic pentafluoride is a well-known pentahalide. Table 3-4 lists some known arsenic halides.[1] All of the arsenic halides are covalent compounds that hydrolyze in water[1] and can be formed by direct combination of the elements. Arsenic trichloride is the most common and commercially significant of all arsenic halides. With a low boiling point, it is easily separated from tin trichloride and the chlorides of other metals. It can also be formed by spontaneous combustion of the elements. Arsenic trichloride has been used as a starting material for the production of numerous organoarsenic compounds and for the preparation of chlorine derivatives of the arsines. In addition, it is used as a dopant in the semiconductor industry and in the production of high-purity arsenic metal. Other arsenic halides include arsenic trifluoride, arsenic pentafluoride, arsenic pentachloride, arsenic tribromide, arsenic triiodide, and arsenic diiodide.

Arsenic Oxides and Acids

The only arsenic oxides that are commercially significant are the trioxide and pentoxide. Arsenic trioxide and arsenic pentoxide are described in detail below.

TABLE 3-4. PHYSICAL PROPERTIES OF ARSENIC HALIDES

Arsenic Halide	CAS No.	Color and Physical State at 25(C	Mp, (C	Bp, (C	Specific gravity[a]
Arsenic trifluoride (AsF_3)	7784-35-2	colorless liquid	-6.0	62.8	2.666^{0}
Arsenic pentafluoride (AsF_5)	7784-36-3	colorless gas	-79.8	2.8	2.33^{-53}
Arsenic trichloride ($AsCl_3$)	7784-34-1	colorless liquid	-16.2	130.2	2.205^{0}
Arsenic tribromide ($AsBr_3$)	7784-33-0	yellow solid	31.2	221	3.66^{15}
Arsenic triiodide (AsI_3)	7784-45-4	red solid	140.4	ca 400	4.39^{15}

5QWTEG4GHGTGPIEG

C6GORGTCVWTGCH OGCUWTGOKXGPCU CUWRGTUETKRV

Arsenic Trioxide--Arsenic trioxide is also known as white arsenic. It is the most commercially important arsenic compound. It can occur in two different crystalline forms and one amorphous variety. The octahedral or cubic modification, arsenolite, is the most common form and is stable at room temperature. It changes into a monoclonic modification, claudetite (consisting of sheets of ASO_3 pyramids sharing oxygen), at temperatures above 430(F. This modification is formed when condensation occurs at temperatures above 430(F. Condensation above 482(F will generally form the amorphous, glassy phase which devitrifies into the octahedral modification at room temperature. This octahedral variety is a white solid that sublimes above 275(F and melts at 527(F under its own vapor pressure.[1]

Arsenic trioxide slightly dissolves in water to form a weakly acidic solution. It is soluble in acids and bases (amphoteric). It can be made by burning arsenic in air, or by the hydrolysis of an arsenic trihalide. Commercially, it is prepared by roasting arsenopyrite. It is often used as a primary analytical standard in oxidimetry since it is readily attainable in a high state of purity and is quantitatively oxidized by many reagents commonly used in volumetric analysis (e.g., dichromate, nitric acid, hypochlorite, and iron(III)).

Arsenic Pentoxide--Arsenic pentoxide is a "white glassy mass," made up of equal numbers of octahedra and tetrahedra sharing corner oxygens to give cross-linked strands.[3] It is an oxidizing agent capable of liberating chlorine from hydrogen chloride. The compound deliquesces in air to form arsenic acid. It dissolves in water slowly, is thermally unstable, and begins to decompose near the melting point, around 572(F. The vapor is made up of arsenic trioxide and oxygen. The pentoxide can be made by reacting arsenic trioxide with oxygen under pressure, or by dehydration of crystalline arsenic acid at temperatures above 392(F (the best method).[1]

Arsenous Acid--Arsenous acid is a weak acid with a dissociation constant of $8x10^{-16}$ at 77(F. It is known to exist only in solution.

Arsenic Acid--Arsenic acid, is known in the solid state as the hemihydrate H_3AsO_4#$0.5H_2O$ and occurs as rhombic, deliquescent crystals. It is made by the oxidation of

arsenic trioxide with concentrated nitric acid. Arsenic acid will lose water upon heating to 248(F and forms pyroarsenic acid. At elevated temperatures, more water is lost and meta-arsenic acid forms. In an acidic solution, arsenic acid and its salts are strong oxidizing agents. Arsenic acid is used as a defoliant and as a starting material for important inorganic and organic arsenic compounds.[3] Various salts (arsenates) are derived from arsenic acid, and are described in detail below.

Arsenates

Arsenates are oxidizing agents and are reduced with concentrated hydrochloric acid or sulfur dioxide. They are generally similar to the phosphates in their compositions and solubilities. Of the many salts of arsenic acid, the salts of potassium, sodium, calcium and lead are important commercially. Arsenates of calcium or lead are often used as insecticides. When a solution of ortho-arsenate is treated with silver nitrate in neutral solution, a chocolate-brown precipitate of silver ortho-arsenate forms. Silver ortho-arsenate can be used as a test to distinguish arsenates from phosphates. With hydrofluoric acid, ortho-arsenate solutions yield hexafluoroarsenates (e.g., potassium hexafluoroarsenate).

Arsenic Sulfides

Table 3-5 presents the physical properties of the common arsenic sulfides.[1,3] These arsenic sulfides are described in detail below.

Arsenic Disulfide--Arsenic disulfide ("red glass") exists in ruby-red crystals or as an amorphous reddish mass. It occurs naturally as the mineral realger. At 513(F it changes into a black allotropic modification and at 585(F the compound melts. Its purity and fineness rather than its chemical composition determine its commercial value. Industrially manufactured red arsenic glass varies in its composition. Today, red glasses typically contain around 61 to 64 percent arsenic and 39 to 36 percent sulfur. Commercially, the compound is produced by heating a mixture of iron pyrites and arsenopyrites or by heating arsenic trioxide with sulfur. It can also be made by prolonged treatment of arsenous sulfide with boiling aqueous sodium

TABLE 3-5. PHYSICAL PROPERTIES OF COMMON ARSENIC SULFIDES

Arsenic Sulfides	CAS No.	Molecular Formula	Color and Physical State at 25(C
Arsenous sulfide (orpiment)	12255-89-9	As_2S_3	Yellow solid
Arsenic sulfide (realgar)	12279-90-2	As_4S_4	Gold or orange solid
Arsenic pentasulfide	1303-34-0	As_4S_{10}	Yellow solid
Tetraarsenic trisulfide	1303-41-9	As_4S_3	Orange-yellow
Tetraarsenic pentasulfide	25114-28-7	As_4S_5	

Source: Reference 1.

bicarbonate, or by heating a sodium bicarbonate-arsenous sulfide mixture in a sealed tube. Water does not affect it, however it will oxidize in nitric acid and inflame in chlorine. Red glass is primarily used as a depilatory in the manufacture of fine leather, and also used in pyrotechnics.

Arsenic (III) Sulfide--Arsenic (III) sulfide is known as orpiment and occurs as a yellow mineral. It is made by precipitation of trivalent arsenic compounds with hydrogen sulfide. The colloidal solution of the arsenic trisulfide can be flocculated with hydrochloric acid, in which it is insoluble. It readily dissolves in basic reagents. Orpiment contains unchanged arsenic trioxide and is poisonous. It was used in the past for cosmetic purposes, but currently it is used in the semiconductor industry, in the production of infrared-permeable windows, and as a pigment.

Arsenic (V) Sulfide--Arsenic (V) sulfide (also referred to as arsenic pentasulfide) is made by fusing stoichiometric quantities of arsenic and sulfur powder or by precipitation from highly acidic arsenate (V) solution with H_2S. Arsenic (V) sulfide will decompose into arsenic (III) sulfide and sulfur. The compound is stable in air up to temperatures of 203(F, but begins to dissociate into arsenous sulfide and sulfur at higher temperatures. It can be hydrolyzed by boiling with water resulting in arsenous acid and sulfur.

3.1.2 Organic Arsenic Compounds

Arsenic combines easily with carbon to form a wide variety of organic compounds with one or more As-C bonds. There are many known organoarsenic compounds. Table 3-6 presents a number of examples.[1]

Arsenic compounds used in agriculture as plant protection agents and pesticides have largely been replaced by metal-free compounds. In the United States, only certain preparations are allowed for use in some States (e.g., those of the Ansar series).[3] For wood preservatives, arsenic compounds are used solely in compound preparations. Organic arsenic compounds can be grouped into aliphatic organoarsenic compounds and aromatic organoarsenic compounds. Both of these groups are described in detail below.

Aliphatic Organoarsenic Compounds

This class of compounds is still used as herbicides and fungicides in rice, cotton, fruit, and coffee plantations, particularly in Eastern Asia. The three main aliphatic organoarsenic compounds are described below.

Methanearsonic Acid

Salts of methanearsonic acid, particularly the iron ammonium salt, Neoasozin, are used as a fungicide in rice growing. The sodium, ammonium, and diethanolammonium salts are used as herbicides in cotton growing.[3]

Dimethylarsinic acid

Dimethylarsinic acid, also called Ansar 160, is used as a total herbicide and desiccant. Generally, it is produced by reaction of methyl halide with a salt of arsenous acid.[3]

TABLE 3-6. ORGANIC ARSENIC COMPOUNDS

Compound	CAS Number	Molecular Formula
Ethylarsine	593-59-9	C_2H_7As
Diethylarsine	692-42-2	$C_5H_{11}As$
Triphenylarsine	603-32-7	$C_{18}H_{15}As$
Dimethylbromoarsine	676-71-1	C_2H_6AsBr
Methyldifluoroarsine	420-24-6	CH_3AsF
Oxophenylarsine	637-03-6	C_6H_5AsO
Phenylarsonous acid	25400-22-0	$C_6H_7AsO_2$
Dimethylarsinous cyanide	683-45-4	C_3H_6AsN
Methyl diphenylarsinite	24582-54-5	$C_{13}H_{13}AsO$
Tetrakis(trifluoromethyl) diarsine	360-56-5	$C_4As_2F_{12}$
Pentamethylpentaarsolane	20550-47-4	$C_5H_{15}As_5$
4-Ethylarsenin	76782-94-0	C_7H_9As
1-Chloroarsolane	30077-24-8	C_4H_8AsO
1*H*-arsole	4542-21-6	C_4H_5As
Phenylarsonic acid	98-05-5	$C_6H_7AsO_3$
Diphenylarsinic acid	4656-80-8	$C_{12}H_{11}AsO_2$
Arsonoacetic acid	107-38-0	$C_2H_5AsO_5$
Diethyl methylarsonate	14806-25-8	$C_5H_{13}AsO_3$
Triphenylarsine oxide	1153-05-5	$C_{18}H_{15}AsO$
Tetrachlorophenylarsorane	29181-03-1	$C_6H_5AsCl_4$
Tetramethylarsonium perchlorate	84742-76-7	$C_4H_{12}AsClO_4$
Triphenylarsonium 2-propenylide	88329-28-6	$C_{21}H_{19}As$

Source: Reference 1.

Aromatic Organoarsenic Compounds

There are two classic methods of preparing aromatic organoarsenic compounds. In one method, aniline is reacted with arsenic acid at 392(F as seen in the sulfonation of organic compounds:

$$C_6H_5NH_2 + H_3AsO_4 \text{ --> } H_2N + C_6H_4 + AsO(OH)_2$$

In the other method, diazo compounds are reacted with sodium arsenate (III):

$$C_2H_5N_2Cl + Na_3AsO_3 \text{ --> } C_6H_5 + AsO(ONa)_2 + N_2 + NaCl$$

Of the two methods, the second method has proven to be the most commercially important in producing arsonic acids.

In a more modern process, arsenic acid complexed with EDTA is added at 266(F to a solution of excess aniline in perchloroethylene. The water of reaction and any unreacted aniline are separated off, and the bis(4-aminophenyl)arsinic acid intermediate is converted by acidic hydrolysis into arsanilic acid.

Arsonic acids are used in various industrial applications. For example, they have been used as corrosion inhibitors for iron and steel, and as additives for motor fuel, agricultural bactericides, herbicides, and fungicides.

The primary use of the arsonic acids was in their supplementary processing to arsenobenzenes and "arsenic oxides" by reduction with SO_2, phosphorus trichloride, sodium dithionite, phosphorous acid, or tin (II) chloride. Reduction with zinc dust and hydrochloric acid yields the arsines, which are reoxidized in air (e.g., phenylarsine, rapidly oxidized in air to form the arseno compound, $C_6H_5As_n$). Additional uptake of oxygen is considerably slower unless catalyzed (e.g., by iron).[3]

Arsenic oxides are relatively stable. All arsenic oxide compounds are oxidized to arsonic derivatives by strong oxidants, including hydrogen peroxide, halogens, and Chloramine-T (sodium p-toluenechlorosulfonamide).

The aromatic arsonic acids are dibasic. Aqueous solutions of the monosodium salts are neutral to mildly acidic, whereas those of the disodium salts are slightly alkaline (pH of 8 to 9). Magnesium and calcium salts are typically soluble in cold water, but upon heating, they precipitate to practically insoluble deposits. Because magnesium and calcium salts are soluble in cold water, they can be used to separate arsonic salts from cold solutions. Arsonic acids generally crystallize well, and their stability depends on the substituents on the benzene ring. Some form azo dyes that contain both arsonic acid and sulfonic acid groups, and are used in the analysis of metals.

Aromatic Arsenobenzenes

Aromatic arseno compounds have amino or hydroxyl groups and are soluble in acids and alkalis. Aromatic arseno compounds will become soluble in water with the addition of a formaldehyde sulfoxylate or formaldehyde hydrogen sulfite into the amino group.

Organic Oxoarsenic Compounds ("Arsenic Oxides")

The reduction of organoarsenic compounds can be controlled by using an appropriate reducing agent so that reaction terminates at the preferred intermediate stage. However, this does not occur with oxidation. In the most commonly used method for the production of organic oxoarsenic compounds from arsonic acids, the acid is directly reduced to the anhydride of the arsonous acid with SO_2.

Organic oxoarsenic compounds are the anhydrides of the arsonous acids. They are extremely poisonous, amphoteric substances barely soluble in water. When dissolved in acids and alkalis, they form salts and can be precipitated from those solutions by carbon dioxide or ammonium chloride.[3]

3.2 Fate Of Arsenic

As previously stated, arsenic is ubiquitous, and is emitted naturally from many sources (e.g., volcanoes, forest wild fires, erosion from mineral deposits). However, the releases originating from human activities (e.g., metal smelting, chemical production and use, coal combustion, waste disposal, pesticide application) are the emissions that can cause substantial environmental contamination. The greatest environmental concentrations of arsenic have been observed in air and soil around mining and smelter operations, whereas coal combustion distributes arsenic to the air in much lower concentrations over a wider area. A brief discussion of the fate of arsenic upon being released to the air, water, and soil is provided below.

3.2.1 Fate of Arsenic in Soil

The majority of soils naturally contain low levels of arsenic (1 to 5 ppm) but certain industrial wastes and pesticide applications can increase concentrations. Approximately 80 percent of the total amount of arsenic that is released to the environment from anthropogenic activities is released to soil.[6] The major anthropogenic sources contributing to arsenic in soils include the application of pesticides and disposal of solid wastes from fossil fuel combustion and industrial processes. Organoarsenical pesticides (e.g., monosodium methanearsonate, disodium methanearsonate) applied to soils are metabolized by soil bacteria to form alkylarsines and arsenate.[7,8]

Land application of sewage sludge has proven to be another source of arsenic in soil. While arsenic has been observed in soil at various hazardous waste sites, it is not always obvious that it was a result of the waste site or from natural causes.

Regardless of the source or form of arsenical, arsenic will react with soil components. The predominant reaction is adsorption onto and reaction with hydrous iron and aluminum oxides which coat soil particles. Heavier soils with a higher clay content and hydrous oxide content adsorb more arsenic than do lighter sandier soils with low clay content.[8] In addition, arsenicals react with ions in solution, such as iron, aluminum, calcium, and magnesium, but may

ED_000719_00032208-00037

also include manganese and lead. Each ion detaches a part of the arsenical depending on the solubility of the compound and the quantity of reactants present. Hence, a soil may be saturated relative to some compounds and not others. The pH of the soil will affect the solubility of these compounds; therefore, changing the soil pH may affect each arsenical's solubility.

There are two known types of oxidation that are responsible for transforming arsenicals environmentally. One type destroys the carbon/arsenic bond and is associated with microbial activity, while the other type causes a change in oxidation state which may or may not be affected by microbial activity. Transformations of arsenic in soil are similar to those seen in aquatic systems, with As^{+5} predominant in aerobic soils; As^{+3} in slightly reduced soils (e.g., temporarily flooded); and arsine, methylated arsenic, and elemental arsenic in very reduced conditions (e.g., swamps and bogs).[6,8] Some arsenate may be reduced to arsenite under certain environmental conditions. Arsenic in sediments or in flooded anaerobic soil may be reduced as a function of reduction/oxidation potential.

3.2.2 Fate of Arsenic in Water

Arsenic can be found in surface water, groundwater, and finished drinking water throughout the United States. The majority of arsenic in natural water is a mixture of arsenate and arsenite, with arsenate usually predominating.[8]

Arsenic is released to water in several ways, including natural weathering processes, discharge from industrial facilities, and leaching from landfills, soil or urban runoff. Once in water, arsenic can go through a complex series of transformations, including oxidation-reduction reactions, ligand exchange, and biotransformations. The factors that most strongly influence the transformations that arsenic will undergo are the oxidation-reduction potential (Eh), pH, metal sulfide and sulfide ion concentrations, iron concentrations, temperature, salinity, and distribution and composition of the biota.[8] Arsenate is usually the predominant form of arsenic in water, however, aquatic microorganisms may reduce the arsenate to arsenite and a variety of methylated arsenicals.

Once in water, the transport and partitioning of arsenic will depend upon its chemical form as well as interactions with other materials present. Any soluble forms will move with the water, and can be carried long distances through rivers. However, arsenic can also be adsorbed from water onto sediments and soils, particularly clays, iron oxides, aluminum hydroxides, manganese compounds, and organic material.[8] Once in sediments, arsenic can be released back into the water through chemical and biological interconversions of arsenic species.

3.2.3 Fate of Arsenic in Air

Arsenic can be released to air from natural sources (e.g., volcanoes and forest fires) and from various industrial sources (e.g., coal combustion, smelter and mining activities) and pesticide application. Arsenic in air primarily exists in the form of particulate matter (mostly in particles less than 2 μm in diameter) and is usually a mixture of arsenite and arsenate. These particles can be transported by wind and air currents until they are brought back to earth by wet or dry deposition. The residence time of arsenic bound to particulate depends on particle size and meteorological conditions; however, a typical value is approximately 9 days.[8] As might be expected, levels of arsenic in air vary with distance from the source, height of the stack, and wind speed. In general, large cities have higher levels of arsenic air concentrations than smaller ones. This is probably due to emissions from coal powered plants. In addition, areas that are near nonferrous metal smelters have reported extremely high arsenic air concentrations (up to 1.56×10^{-10} lb/ft^3).[8]

3.2.4 Fate of Arsenic in Plants and Food

Once arsenic enters the environment, it enters the food chain. Bioconcentration of arsenic occurs in aquatic organisms, mainly in algae and lower invertebrates. Low levels of arsenic have been measured in freshwater invertebrates and fish, while higher levels have been observed in marine oysters. Apparently, biomagnification in aquatic food chains is not significant, although some fish and invertebrates have high levels of arsenic compounds.

Once arsenic is in the soil, it can be taken into plants via root uptake (plants can also obtain arsenic through foliar absorption). In general, the greater the amount of arsenic available for uptake, the greater the amount that will be absorbed by a plant. However, available arsenic is not proportional to total arsenic. A low (10 to 50 ppm) arsenic content in a sandy soil may be more phytotoxic (i.e., available) than much higher levels (200 to 500 ppm) in a heavier clay soil and, therefore, a plant grown on sandy soil will contain higher residue levels.[8]

3.3 Overview Of Production And Use

Commercial arsenic is primarily produced as a by-product in the smelting of nonferrous metal ores containing gold, silver, lead, nickel, and cobalt. In 1985, all United States domestic production of arsenic ceased.

At the present time, approximately 17 countries (the U.S. is not included) recover arsenic as arsenic trioxide from the smelting or roasting of nonferrous metal ores or concentrates. According to the U.S. Bureau of Mines, in 1993, the United States imported all of the arsenic it required (almost 13,228 tons). Table 3-7 presents U.S. import data for arsenicals from 1991 to 1993 by country.[9] About 97 percent was imported as arsenic trioxide, and approximately 3 percent as metallic arsenic.[9] China, the world's largest producer of both arsenic trioxide and metallic arsenic, sold large amounts of both commodities to the United States.

Historically, arsenic was used in agricultural applications as an insecticide, herbicide, and cotton desiccant. However, with an increase in environmental awareness and a better understanding of the toxicity of arsenic, most of the agricultural uses for arsenic were banned. Around 1975, the use of arsenic as a wood preservative began to grow and by 1990, 70 percent of arsenic consumed in the United States was used by the wood preservative industry and 20 percent by the agricultural industry.[10] The primary use of arsenic in the United States today is in the manufacture of chemicals, with arsenic trioxide being the sole starting material.[3] Metallic arsenic has a limited demand but still finds use in electronic and semiconductor applications. The production and uses of both metallic arsenic and arsenic trioxide are presented below.

TABLE 3-7. U.S. IMPORTS FOR CONSUMPTION OF ARSENICALS, BY COUNTRY

Class	Country	1993 Quantity (tons)
Arsenic trioxide	Australia	--
	Belgium	747
	Chile	6,670
	China	12,908
	Finland	--
	France	2,080
	Germany	17
	Ghana	--
	Hong Kong	1,813
	Mexico	4,304
	Philippines	1,267
	South Africa, Republic of	132
	Sweden	--
	Taiwan	--
	United Kingdom	19
	Other	389
	Total	30,346
Arsenic Metal	Belgium	--
	Canada	[a]
	China	762
	Germany	12
	Hong Kong	19
	Japan	52
	Philippines	--
	United Kingdom	1
	Total[b]	845

5QWTEG4GHGTGP‡G

C.GUUVJCP!◄¶ WPKV┼
D&CVCOC[PQVCFFVQVQVCNUUQYIDGECWQHKPFGRGPFGTQWPFKPI┼

3.3.1 Metallic Arsenic

Metallic arsenic is mainly used in nonferrous alloys. Small amounts (around 0.5 percent) of arsenic are added to lead-antimony grid alloys used in lead-acid batteries to increase endurance and corrosion resistance. Additions of the same order (0.02 to 0.5 percent) to copper alloys raise the recrystallization temperature and improve high temperature stability and corrosion resistance. Additions of arsenic (up to 2 percent) to lead in shot improve the sphericity of lead ammunition. While limited, there is a demand for high-purity arsenic (99.99 percent and greater) for use in the semiconductor and electronics industry. It is used in electronics together with gallium or indium for producing light emitting diodes (LED), infrared detectors, and lasers. High-purity metallic arsenic is used in the production of photoreceptor alloys for xerographic plain paper copiers.[1] In the past (1974 to 1986), arsenic was supplied domestically by ASARCO, Inc., which shut down its operation due to economic and environmental pressures. The United States must now rely upon imports from Japan, Canada, and the United Kingdom for its high purity metallic arsenic. Metallic arsenic may also be used in condensers, evaporators, ferrules, and heat exchanger and distillation tubes.[1]

3.3.2 Arsenic Trioxide

Arsenic trioxide is easily volatilized during the smelting of copper and lead concentrates, and is therefore concentrated with the flue dust.[1] Most of this raw material originates from copper smelters, although some also comes from lead, cobalt, and other smelters. Crude flue dust may contain up to 30 percent arsenic trioxide, the balance being oxides of copper or lead, and other metals such as antimony. This crude flue dust is subsequently upgraded by mixing with a small quantity of pyrite or galena and roasting. Pyrite and galena are added to prevent arsenites from forming during roasting.[1] During roasting, the gases and vapors are allowed to pass through a cooling flue which consists of a series of brick chambers or rooms called kitchens. The arsenic vapor which condenses in these chambers is of varying purity (from 90 to 95 percent).[1] Higher purity products can be obtained by resubliming the crude trioxide, an operation typically carried out in a reverberatory furnace.

Since arsenic trioxide is a by-product, production is not based on the demand for arsenic but by the demand for copper, lead, etc.[3] The biggest consumers of arsenic trioxide are the United States, Malaysia and the United Kingdom.[3] Until the late 1980s, the United States was the main supplier of arsenic trioxide for domestic use. Now it must rely entirely on imports.

Most arsenic is used in the form of compounds with arsenic trioxide as the sole starting material. Arsenic trioxide is the primary commodity of commerce from which a number of important chemicals are manufactured.

Refined arsenic trioxide, once used as a decolorizer and fining agent in the manufacturing of bottleglass and other types of glassware, is being replaced by arsenic acid for environmental reasons. Arsenic acid is used in the preparation of wood preservative salts, primarily chrome copper arsenate. Arsenilic acid is used as a feed additive for poultry and swine. Sodium arsenite is useful for cattle and sheep dips.

References For Section 3.0

1. *Kirk-Othmer Encyclopedia of Chemical Technology*. 4th Edition, Volume 3. New York, New York: John Wiley and Sons, Inc., 1992. pp. 624-659.

2 Lederer, W.H. and R.J. Fensterheim (eds). *Arsenic: Industrial, Biomedical, Environmental Perspectives*. New York, New York: Van Nostrand Reinhold, 1983.

3. Hanusch, K., H. Grossman, K.A. Herbst, B. Rose, and H.V. Wolf. Arsenic and Arsenic Compounds. In: *Ullman's Encyclopedia of Industrial Chemistry.* 5th ed. Volume A3. W. Gerhartz, Y.S. Yamamoto, F.T. Campbell, R. Pfefferkorn, J.F. Rounsaville, eds. Federal Republic of Germany: VCH, 1985. pp. 113-141.

4. U.S. EPA. *Clean Air Act, Section 112(k) Candidate Pollutants*, draft report. Research Triangle Park, North Carolina: U.S. Environmental Protection Agency, Office of Air Quality Planning and Standards, Visibility and Ecosystem Protection Group, 1996.

5. *Hawley's Condensed Chemical Dictionary*, 12th ed. R.J. Lewis, Sr., ed. New York, New York: Van Nostrand Reinhold, 1993.

6. U.S. EPA. Arsenic. In: *Intermedia Priority Pollutant Guidance Documents*. Washington, D.C.: U.S. Environmental Protection Agency, Office of Pesticides and Toxic Substances, 1982.

7. Hood, R.D. *Cacodylic Acid: Agricultural Uses, Biological Effects, and Environmental Fate*. Report to Veterans Administration Central Office, Agent Orange Projects Office, Washington, D.C., by the University of Alabama, Tuscaloosa, Alabama, and R.D. Hood and Associates, Northport, Alabama, 1985.

8. U.S. Department of Health and Human Resources. *Toxicological Profile for Arsenic*, Draft Update. Public Health Service. Agency for Toxic Substances and Disease Registry, February 18, 1992.

9. U.S. Department of Interior. *Mineral Industry Surveys - Arsenic in 1993*. Washington, D.C.: U.S. Department of Interior, Bureau of Mines, June 22, 1994.

10. Loebenstein, J.R. *The Materials Flow of Arsenic in the United States*. Washington, D.C.: U.S. Department of Interior, Bureau of Mines, 1994. pp. 1-12.

SECTION 4.0
EMISSIONS OF ARSENIC AND ARSENIC COMPOUNDS FROM COMBUSTION SOURCES

This section contains process descriptions, available emission factor data, and source locations for source categories that emit arsenic and arsenic compounds during combustion. These source categories include fuel combustion in stationary external combustion, incineration of various types of waste, including municipal waste, sewage sludge, medical waste, hazardous waste, as well as internal combustion, kraft pulping lime kilns, and crematories.

There are few emission controls that are dedicated solely to reducing arsenic emissions from combustion sources. However, the control strategies used to reduce particulate matter (PM) in general have been found to be effective in controlling arsenic emissions in particulate form. Where a specific emission control strategy has been identified to reduce arsenic emissions from a particular combustion source discussed in this section, that control strategy is discussed as part of the process description for that source. In many cases throughout this section, emission factor data are provided for both controlled and uncontrolled combustion units that are typically found in a particular source category.

4.1 Stationary External Combustion

The combustion of solid, liquid, and gaseous fuels such as coal, wood, fuel oil, and natural gas has been shown to be a source of arsenic emissions. Arsenic emission rates depend on both fuel characteristics and combustion process characteristics. Emissions of arsenic originate from arsenic compounds contained in fuels and emitted during combustion.[1,2] Because metals such as arsenic only change forms (chemical and physical states) and are never destroyed during combustion, the amount of arsenic in the original fuel or waste will be the amount of

arsenic found in the ash or emitted from stacks controlled by air pollution control devices (APCDs).[3,4]

Arsenic concentration in coal depends on the type of coal. Some specific arsenic concentrations in coal are as follows: anthracite coal contains approximately 8 ppm arsenic; bituminous coal contains 20 ppm arsenic; subbituminous coal contains 6 ppm arsenic; and lignite coal contains 23 ppm arsenic.[5]

Arsenic and arsenic compound emissions may be reduced from combustion sources by using PM control devices and lower combustion and APCD temperatures. These arsenic reduction techniques are discussed briefly below.

In general, use of PM control devices in combustion/air pollution control systems can be viewed as a surrogate for controlling emissions of arsenic and other metals.[4] The most effective means of controlling arsenic emissions to the atmosphere are: (1) minimizing arsenic vaporization in the combustion zone and (2) maximizing small particle collection in the APCD. Arsenic compounds, like many heavy metal compounds, vaporize at elevated temperatures and, as temperatures drop, only a fraction of the vaporized metal condenses. The remaining vaporized metal can escape through the PM APCD uncontrolled.

During the combustion process, many trace metals (including arsenic) volatilize and then, upon cooling, condense on all available particulate surface area. These submicrometer particles with very high surface areas can carry a very high concentration of condensed metal. This phenomenon is known as "fine particle enrichment." There are three general factors favoring fine particle enrichment of metals:[4]

- Small particle size;
- Large number of particles; and
- Low flue gas temperatures.

There is some evidence that fine particle enrichment of metals on PM is not as prevalent at higher flue gas temperatures. It is believed that as long as the flue gas temperatures remain high, the metals tend to remain volatized, such that they do not condense and bond with PM.[4]

The primary stationary combustion sources emitting arsenic compounds are boilers, furnaces, heaters, stoves, and fireplaces used to generate heat and/or power in the residential, utility, industrial, and commercial use sectors. A description of combustion sources, typical emission control equipment, and arsenic emission factors for each of these major use sectors is provided in the sections that follow.

4.1.1 Process Descriptions for Utility, Industrial, and Commercial Fuel Combustion

Utility Sector

Utility boilers burn coal, oil, natural gas, and wood to generate steam for electricity generation. Fossil fuel-fired utility boilers comprise about 72 percent (or 497,000 megawatts [MW]) of the generating capacity of U.S. electric power plants. Of these fuels, coal is the most widely used, accounting for approximately 60 percent of the U.S. fossil fuel-powered electricity generating capacity. Natural gas represents about 25 percent and oil represents the remaining 15 percent.[6]

A utility boiler consists of several major subassemblies, as shown in Figure 4-1.[6] These subassemblies include the fuel preparation system, air supply system, burners, the furnace, and the convective heat transfer system. The fuel preparation system, air supply, and burners are primarily involved in converting fuel into thermal energy in the form of hot combustion gases. The last two subassemblies transfer the thermal energy in the combustion gases to the superheated steam that operates the steam turbine and produces electricity.[6]

Utility boilers are generally identified by their furnace configuration. Different furnace configurations used in utility boilers include tangentially-fired, wall-fired, cyclone-fired,

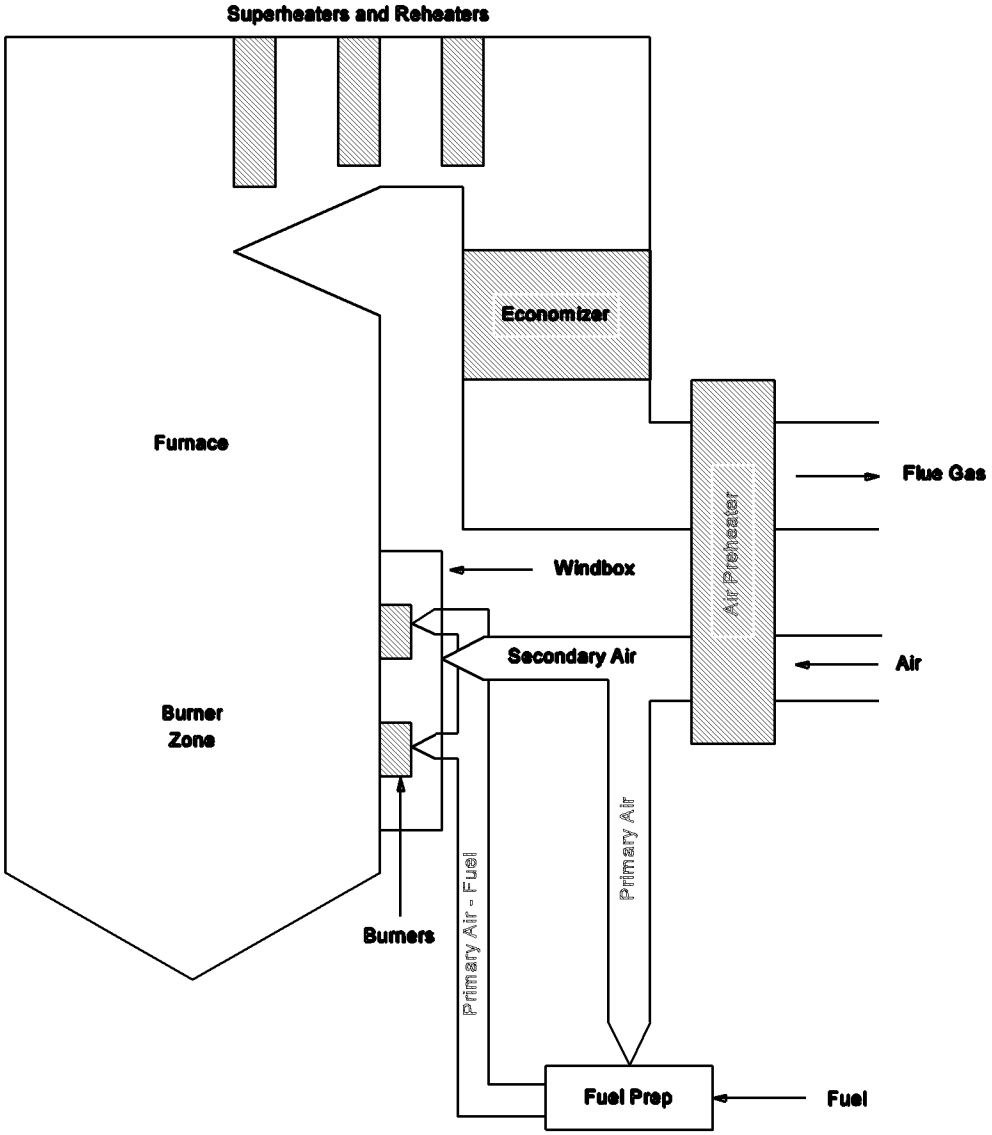

ERG_POM_4121.pre

(KIWTGffi┬☼!┤ffiffi5KORNKHGFffi$QKGTffi5EJGOCVKE

5QWTEG4GHGTGP.EG

┬☼┬

stoker-fired, and fluidized bed combustion (FBC) boilers. Some of these furnace configurations are designed primarily for coal combustion, while others are also used for oil or natural gas combustion. The furnace types most commonly used for firing oil and natural gas are the tangentially-fired and wall-fired boiler designs.[7] Each of these furnace types is described below.

Tangentially-fired Boiler--The tangentially-fired boiler is based on the concept of a single flame zone within the furnace. The fuel-air mixture in a tangentially-fired boiler projects from the four corners of the furnace along a line tangential to an imaginary cylinder located along the furnace centerline. When coal is used as the fuel, the coal is pulverized in a mill to the consistency of talcum powder (i.e., so that at least 70 percent of the particles will pass through a 200 mesh sieve), entrained in primary air, and fired in suspension.[8] As fuel and air are fed to the burners, a rotating "fireball" is formed. By tilting the fuel-air nozzle assembly, this "fireball" can be moved up and down to control the furnace exit gas temperature and to provide steam temperature control during variations in load. Tangentially-fired boilers commonly burn pulverized coal. However, oil or gas may also be burned.[6]

Wall-fired Boiler--The wall-fired boiler, or normal-fired boiler, is characterized by multiple, individual burners located on a single wall or on opposing walls of the furnace (Figure 4-2).[6] As with tangentially-fired boilers, when coal is used as the fuel it is pulverized, entrained in primary air, and fired in suspension. In contrast to tangentially-fired boilers that produce a single flame zone, each of the burners in a wall-fired boiler has a relatively distinct flame zone. Various wall-fired boiler types exist, including single-wall, opposed-wall, cell, vertical, arch, and turbo. Wall-fired boilers may burn pulverized coal, oil, or natural gas.[6]

Cyclone-fired Boiler--In the cyclone-fired boiler, fuel and air are burned in horizontal, cylindrical chambers, producing a spinning, high-temperature flame. Cyclone-fired boilers are almost exclusively crushed coal-fired. The coal is crushed to a 4-mesh size and admitted with the primary air in a tangential fashion. The finer coal particles are burned in suspension, while the coarser particles are thrown to the walls by centrifugal force.[7] Some units are also able to fire oil and natural gas.[6]

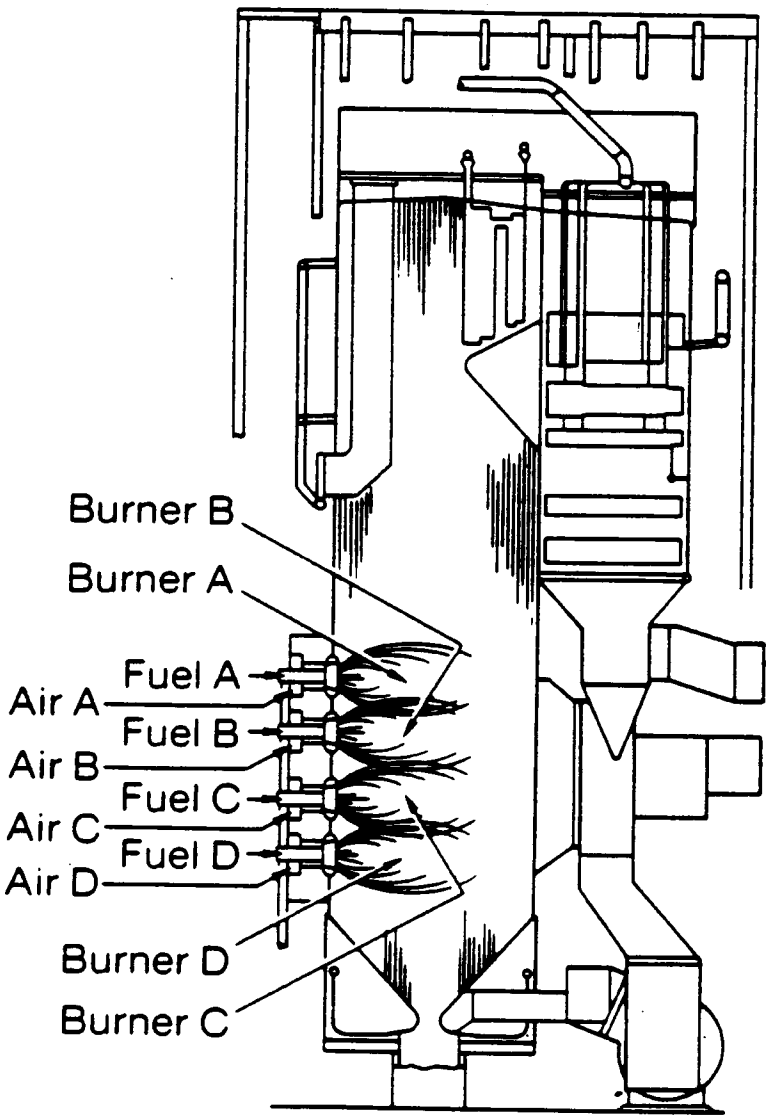

ERG_POM_4122.pre

(KMWTGffi ffiffiffi5KP INGffi 9 CNN (KTGFffi $QKGT

5QWTEG4GHGTGPEG

Fluidized Bed Combustion Boiler--Fluidized bed combustion is a newer boiler technology that is not as widely used as the other, more conventional boiler types. In a typical FBC, crushed coal in combination with inert material (sand, silica, alumina, or ash) and/or sorbent (limestone) are maintained in a highly turbulent suspended state by the upward flow of primary air (Figure 4-3). This fluidized state promotes uniform and efficient combustion at lower furnace temperatures, between 1,575 and 1,650(F, compared to 2,500 and 2,800(F for conventional coal-fired boilers. Fluidized bed combustors have been developed to operate at both atmospheric and pressurized conditions.[6]

Stoker-fired Boiler--Instead of firing coal in suspension as in the boilers described above, the mechanical stoker can be used to burn coal in fuel beds. Mechanical stokers are designed to feed coal onto a grate within the furnace. The most common stoker type used in the utility industry is the spreader stoker (Figure 4-4).[6] In the spreader stoker, a flipping mechanism throws crushed coal into the furnace and onto a moving fuel bed (grate). Combustion occurs partly in suspension and partly on the grate.[8]

Emission Control Techniques--Utility boilers are highly efficient and among the best controlled of all combustion sources. Existing emission regulations for total PM have necessitated controls on coal- and oil-fired utility sources. Emission controls are not required on natural gas boilers because, relative to coal and oil units, uncontrolled emissions are inherently low.[9] Baghouses, electrostatic precipitators (ESPs), wet scrubbers, and multicyclones have been used to control PM in the utility sector. As described in other source category sections, arsenic condenses on PM, which is easily controlled by PM control technologies. Particulate arsenic, specifically fine particulate, is controlled most effectively by baghouses or ESPs. Depending on their design, wet scrubbers are potentially effective in controlling particulate arsenic. Multicyclones are less effective at capturing fine particles of arsenic and, therefore, are a poor control system for arsenic emissions.[10]

A more recently applied SO_2 control technique for utility boilers is spray drying. In this process, the gas stream is cooled in the spray dryer, but it remains above the saturation temperature. A fabric filter or an ESP is located downstream of the spray dryer, thus controlling

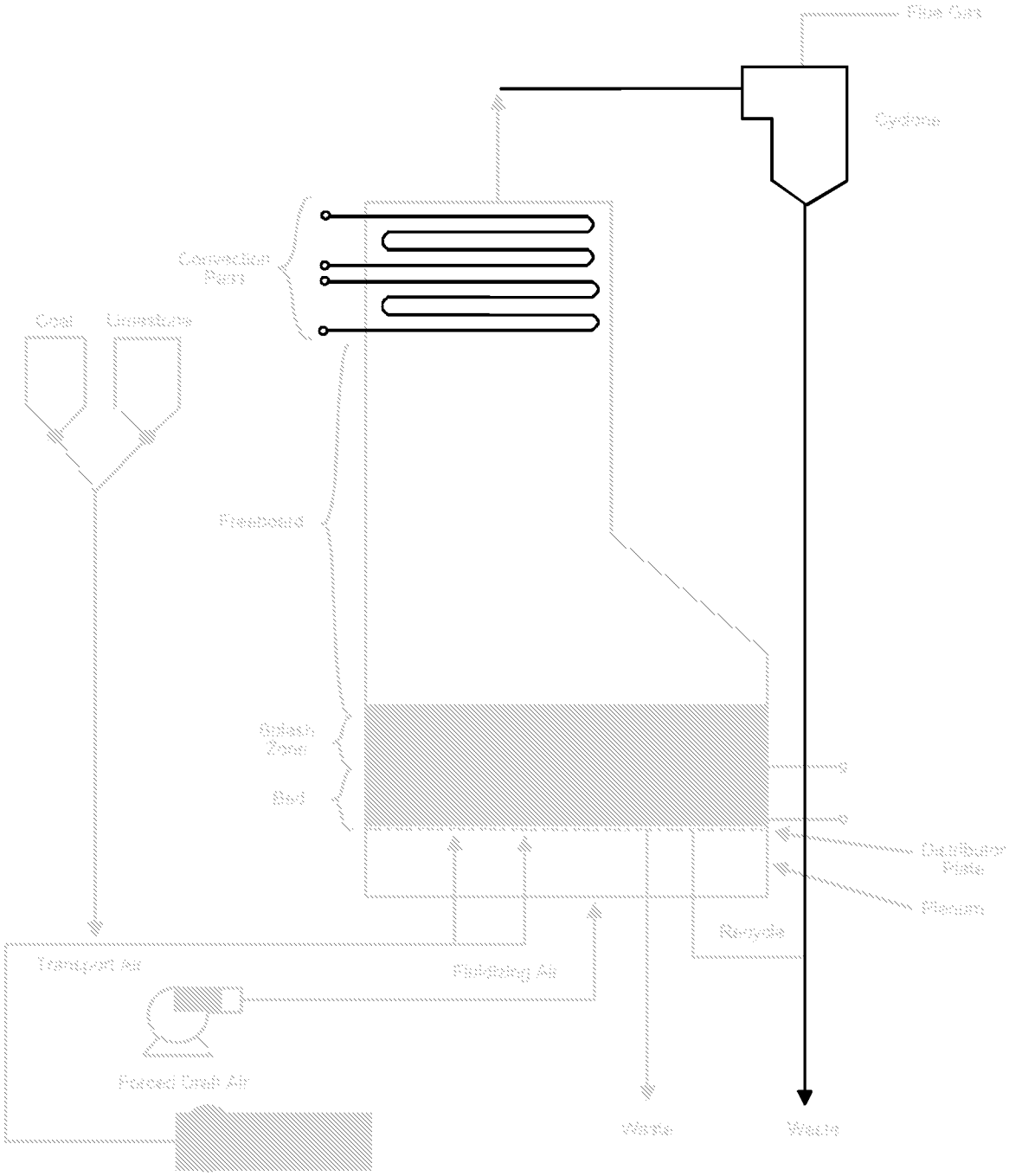

ERG_POM_4124.ds4

(KIWTGffi ffiffi5KORNKHGFffi#VOQLRJGTKEffi(NWKFK\GFffi$GFffi%QODWDVQTffi2TQEGUUffi(NQYffi&KCITCO

5QWTEG4GHGTGPEG

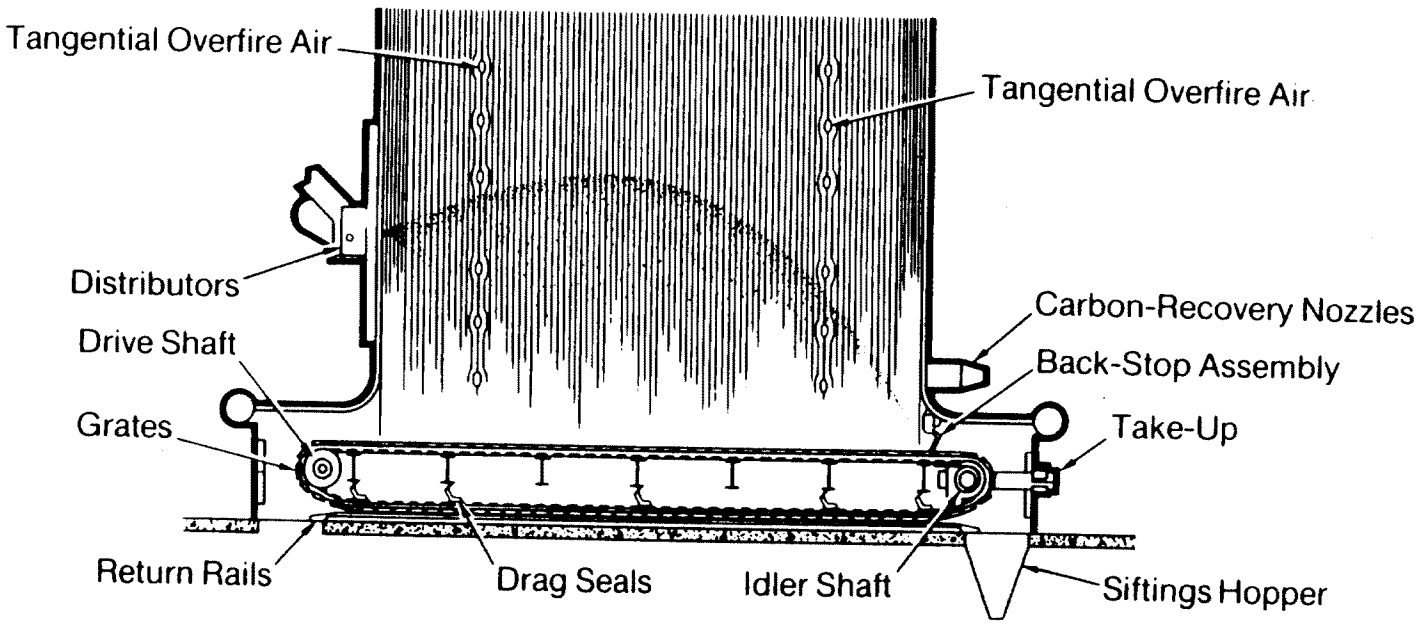

(KMTGffi ffiffi5RTGCFGTffi6 [RGffi5\QMGT(KTGFffi$QKGT

5QWTE GHGTGPEG

both particulate and vapor-phase arsenic compounds that condense before they reach the baghouse or ESP.[9,10]

Industrial/Commercial Sector

Industrial boilers are widely used in manufacturing, processing, mining, and refining, primarily to generate process steam, electricity, or space heat at the facility. Only a limited amount of electricity is generated by the industrial sector; only 10 to 15 percent of industrial boiler coal consumption and 5 to 10 percent of industrial boiler natural gas and oil consumption are used for electricity generation.[11] Commercial boilers are used to provide space heating for commercial establishments, medical institutions, and educational institutions.

Industrial boiler use is concentrated in four major industries: paper products, chemical products, food, and petroleum. The most commonly used fuels include natural gas, distillate and residual fuel oils, and coal in both crushed and pulverized form.[11,12,13]

Other fuels burned in industrial boilers are wood wastes, liquified petroleum gas, and kerosene. Wood waste is the only non-fossil fuel discussed here since few arsenic emissions are attributed to the combustion of liquified petroleum gas and kerosene. The burning of wood waste in boilers is confined to those industries where it is available as a by-product. It is burned both to obtain heat energy and to alleviate possible solid waste disposal problems. Generally, bark is the major type of wood waste burned in pulp mills. In the lumber, furniture, and plywood industries, either a mixture of wood and bark, or wood alone, is frequently burned. As of 1980, the most recent data identified, there were approximately 1,600 wood-fired boilers operating in the United States with a total capacity of over 100,000 million Btu/hr (30,000 MW thermal).[12]

Many of the same boiler types used in the utility sector are also used in the industrial/commercial sector; however, the average size boiler used in the industrial/ commercial sector is substantially smaller than the average size boiler used in the utility sector. In addition, a few boiler designs are used only by the industrial/commercial sector. For a general description of

the major subassemblies and key thermal processes that occur in boilers, refer to Figures 4-1 to 4-4 in the section on Utility Sector Process Description and the accompanying discussion.

Stoker-Fired Boiler--Instead of firing coal in suspension (like the boilers described in the Utility Sector Process Description section), mechanical stokers can be used to burn coal in fuel beds. All mechanical stokers are designed to feed coal onto a grate within the furnace. The most common stoker types in the industrial/commercial sector are overfeed and underfeed stokers. In overfeed stokers, crushed coal is fed from an adjustable grate above onto a traveling or vibrating grate below. The crushed coal burns on the fuel bed as it progresses through the furnace. Conversely, in underfeed stokers, crushed coal is forced upward onto the fuel bed from below by mechanical rams or screw conveyors.[6,8]

Water-tube Boilers--In water-tube boilers, water is heated as it flows through tubes surrounded by circulating hot gases. These boilers represent the majority (i.e., 57 percent) of industrial and commercial boiler capacity (70 percent of industrial boiler capacity).[11] Water-tube boilers are used in a variety of applications, from supplying large amounts of process steam to providing space heat for industrial and commercial facilities. These boilers have capacities ranging from 9.9 to 1,494 million Btu/hr (2.9 to 439.5 MW thermal), averaging about 408 million Btu/hr (120 MW thermal). The most common types of water-tube boilers used in the industrial/commercial sector are wall-fired and stoker-fired boilers. Tangentially-fired and FBC boilers are less commonly used.[13] Refer to Figures 4-1 to 4-4 and the accompanying discussion in the section on Utility Sector Process Description for more detail on these boiler designs.

Fire-tube and Cast Iron Boilers--Two other heat transfer methods used in the industrial/commercial sector are fire-tube and cast iron boilers. In fire-tube boilers, hot gas flows through tubes that are surrounded by circulating water. Fire-tube boilers are not available with capacities as large as water-tube boilers, but they are also used to produce process steam and space heat. Most fire-tube boilers have a capacity between 1.4 and 25 million Btu/hr (0.4 to 7.3 MW thermal). Most installed fire-tube boilers burn oil or gas and are used primarily in commercial/institutional applications.[13]

In cast iron boilers, the hot gas is also contained inside the tubes that are surrounded by the water being heated, but the units are constructed of cast iron instead of steel. Cast iron boilers are limited in size and are used only to supply space heat. Cast iron boilers range in size from less than 0.34 to 9.9 million Btu/hr.[13]

Wood Waste Boilers--The burning of wood waste in boilers is primarily confined to those industries where it is available as a by-product. Wood is burned both to obtain heat energy and to alleviate solid waste disposal problems. Wood waste may include large pieces such as slabs, logs, and bark strips as well as cuttings, shavings, pellets, and sawdust.[12]

Various boiler firing configurations are used to burn wood waste. One configuration that is common in smaller operations is the dutch oven or extension-type of furnace with a flat grate. This unit is used widely because it can burn very high-moisture fuels. Fuel is fed into the oven through apertures in a firebox and is fired in a cone-shaped pile on a flat grate. The burning is accomplished in two stages: (1) drying and gasification, and (2) combustion of gaseous products. The first stage takes place in a cell separated from the boiler section by a bridge wall. The combustion stage takes place in the main boiler section.[12]

In another type of boiler, the fuel-cell oven, fuel is dropped onto suspended fixed grates and is fired in a pile. The fuel cell uses combustion air preheating and positioning of secondary and tertiary air injection ports to improve boiler efficiency.[12]

In many large operations, more conventional boilers have been modified to burn wood waste. These modified units may include spreader stokers with traveling grates or vibrating grate stokers, as well as tangentially-fired or cyclone-fired boilers. Refer to Figures 4-1 to 4-4 and the accompanying discussion in the section on Utility Sector Process Description for more detail on these types of boilers. The spreader stoker, which can burn dry or wet wood, is the most widely used of these configurations. Fuel is dropped in front of an air jet that casts the fuel out over a moving grate. The burning is carried out in three stages: (1) drying, (2) distillation and burning of volatile matter, and (3) burning of fixed carbon. These operations often fire natural gas or oil

as auxiliary fuel. Firing an auxiliary fuel helps to maintain constant steam when the wood supply fluctuates or to provide more steam than can be generated from the wood supply alone.[12]

Sander dust is often burned in various boiler types at plywood, particle board, and furniture plants. Sander dust contains fine wood particles with a moisture content of less than 20 percent by weight. The dust is fired in a flaming horizontal torch, usually with natural gas as an ignition aid or as a supplementary fuel.[12]

A recent development in wood-firing is the FBC (refer to Figures 4-1 to 4-4 and the accompanying discussion in Utility Sector Process Description for more detail on this boiler type). Because of the large thermal mass represented by the hot inert bed particles, FBCs can handle fuels with high moisture content (up to 70 percent, total basis). Fluidized bed combustors can also handle dirty fuels (up to 30 percent inert material). Wood material is pyrolyzed faster in a fluidized bed than on a grate due to its immediate contact with hot bed material.[12]

The composition of wood waste is expected to have an impact on arsenic emissions. The composition of wood waste depends largely on the industry from which it originates. Wood waste fuel can contain demolition debris like plastics, paint, creosote-treated wood, glues, synthetics, wire, cable, insulation, and so forth, which are potential sources of arsenic emissions. Pulping operations, for example, produce great quantities of bark along with sand and other noncombustibles. In addition, when fossil fuels are co-fired with wood waste, there is potential for additional arsenic emissions from the arsenic content of the fossil fuel.[14]

Waste Oil Combustion--Waste oil is another type of fuel that is burned primarily in small industrial/commercial boilers and space heaters. Space heaters (small combustion units generally less than 250,000 Btu/hr heat input) are common in automobile service stations and automotive repair shops where supplies of waste crankcase oil are available.[15] Waste oil includes used crankcase oils from automobiles and trucks, used industrial lubricating oils (such as metal working oils), and other used industrial oils (such as heat transfer fluids). Due to a breakdown of the physical properties of these oils and contamination by other materials, these oils are considered waste oils when they are discarded.[16]

The Federal government has developed regulations for waste oil fuel under the Resource Conservation and Recovery Act (RCRA). The EPA has determined that as long as used oil is recycled (which includes burning it for energy recovery as well as re-refining it or other processes), it is not considered a hazardous waste under RCRA.[17] However, if a facility does burn used oil, that facility is subject to certain requirements under RCRA.

EPA has established two categories of waste fuel: "on-specification" and "off-specification." If the arsenic levels of the waste oil are 5 ppm or less, the waste oil is classified as "on-specification;" if the arsenic levels are greater than 5 ppm, the waste oil is classified as "off-specification". [18]

If a facility is burning "on-specification" waste oil for energy recovery, that facility is only subject to certain reporting and recordkeeping requirements.[18] If a facility burns the waste oil in a space heater with heat input capacity less than 0.5 million Btu/hr and vents the exhaust to the ambient air, then that facility is not subject to any requirements.[19]

A facility burning "off-specification" waste oil for energy recovery must comply with additional requirements, including verification to EPA that the combusted oil was not mixed with other hazardous wastes.[20]

Boilers designed to burn No. 6 (residual) fuel oils or one of the distillate fuel oils can be used to burn waste oil, with or without modifications for optimizing combustion. As an alternative to boiler modification, the properties of waste oil can be modified by blending it with fuel oil to the extent required to achieve a clean-burning fuel mixture.

Coal Combustion--A very small amount of coal is used in the industrial/ commercial sector. Coal accounts for only 18 percent of the total firing capacity of fossil fuel used. The majority of coal combustion occurs in the utility sector. Refer to Figures 4-1 to 4-4 and the accompanying discussion in Utility Sector Process Description for more detail about these boiler types.

Emission Control Techniques--The amount of arsenic emissions from industrial/ commercial boilers depends primarily on two factors: (1) the type of fuel burned, and (2) the type of boiler used. The secondary influences on arsenic emissions are the operating conditions of the boiler and the APCD used.

Emission controls for industrial boilers and their effectiveness in reducing arsenic emissions are very similar to those previously described for utility boilers. PM control in the industrial sector is achieved with baghouses, ESPs, wet scrubbers, and multicyclones.

PM emissions from oil-fired industrial boilers generally are not controlled under existing regulations because emission rates are low. Some areas may limit SO_2 emissions from oil-firing by specifying the use of lower-sulfur-content oils. Natural gas-fired industrial boilers are also generally uncontrolled because of very low emissions.[9, 10]

Wood-fired industrial boilers are typically controlled by multicyclones followed by venturi or impingement-type wet scrubbers for PM control. Some wood-fired boilers use ESPs for PM control. The effect of both control systems on arsenic emissions reduction is estimated to be similar to that obtained at coal-fired units using the same technology (i.e., potentially good PM and vaporous arsenic control with scrubbers, and effective PM arsenic control but no vaporous arsenic control with ESPs).[9,10]

4.1.2 Emission Factors for Utility, Industrial, and Commercial Fuel Combustion

Extensive arsenic emissions data for utility, industrial, and commercial stationary external combustion sources are available in the literature. Because State and Federal air pollution regulations often require emissions testing for toxic air pollutants, a significant current database of arsenic emissions from these fuel combustion sources exists.

Emission factors for utility, industrial, and commercial stationary external combustion source categories, grouped according to the type of fuel burned, are presented in Tables 4-1 to 4-12 and discussed under the following subheadings:

& Wood waste combustion:

-- Utility boilers (Table 4-1),

-- Industrial boilers (Table 4-2),

-- Commercial/institutional boilers (Table 4-3);

& Coal combustion:

-- Utility boilers (Table 4-4),

-- Industrial boilers (Table 4-5),

-- Commercial/institutional boilers (Table 4-6);

& Oil combustion:

-- Utility boilers (Table 4-7),

-- Industrial boilers (Table 4-8),

-- Commercial/institutional boilers (Table 4-9);

& Waste oil combustion:

-- Industrial boilers (Table 4-10),

-- Commercial/institutional boilers (Table 4-11); and

& Solid waste combustion:

-- Utility boilers (Table 4-12).

Wood Waste Combustion

Arsenic emission factors for wood waste combustion in utility, industrial, and commercial boilers are presented in Tables 4-1, 4-2, and 4-3, respectively. A general uncontrolled emission factor in units of lb per ton of wood waste combusted on wet, as-fired basis of 50 percent moisture and 4,500 Btu/lb is given in each table. These emission factors are widely applicable to all utility, industrial, and commercial wood waste combustion SCC categories.[6] However, a wide range of boiler sizes, boiler and control device configurations, and fuel characteristics are reflected by these composite emission factors. For this reason, if site-specific information is available to characterize an individual combustion source more accurately, it is recommended that the reader locate the appropriate process-specific emission factor presented in the applicable table.

The average emission factors for utility wood waste-fired boilers are presented in Table 4-1.[12,21] The emission factors represent a range of control configurations and wood waste compositions.[12]

Average emission factors for industrial wood waste-fired boilers are presented in Table 4-2.[12,22,23,24,25,26,27] A portion of emission factors included are based on a comprehensive toxic air emission testing program in California. The summarized results of the study were used to obtain the average arsenic emission factors. The emission factors represent a range of boiler designs and capacities, control configurations, and wood waste compositions. The study, conducted by the Timber Association of California (TAC), tested boiler types with capacities greater than 50,000 lb of steam per hour, including fuel cell, dutch oven, stoker, air injection, and fluidized bed combustors. The range of control devices represented in the sample set included multiple cyclones, ESPs, and wet scrubbers.[22,23,25]

Wood waste-fired commercial/institutional boilers average emission factors are presented in Table 4-3.[12] These emission factors represent uncontrolled configurations and a range of wood waste compositions.[12] Many of the same emission factors can be found in the utility and

6#$.'ffi┬☼!┤ffiffi#45'0+%ffi'/+55+10ffi(#%6145ffi(14ffi911&ffi9#56'☼(+4'&ffi76+.+6;ffi$1+.'45

5%%0WODGT	'OKUUKGP5QWTEG	%QPVTQNXKEG	#XGTCIG'OKUUKQP(CEVQT KPND◄VQP	'OKUUKQP(CEVQT4CPIG KPND◄VQP	'OKUUKQP (CEVQT4CVKPI	4GHGTGPEG
!!☼!!☼!↕☼!!	9QQP9CUVG☼(KTGF $QKNGT$CTM(KTGF♂	0QPG	→┤Z!!↕ ☼	!!┤Z!!↕ ☼ ☼ ¶┤Z!!↕☼	%	!!¶
!!☼!!☼!↕☼¶	9QQP9CUVG☼(KTGF $QKNGT9QQF◄$CTM (KTGF♂	0QPG	→┤Z!!↕ ☼	!!┤Z!!↕ ☼ ☼ ¶┤Z!!↕☼	%	!!¶
!!☼!!☼!↕☼┴	9QQP9CUVG☼(KTGF $QKNGT9QQF(KTGF♂	0QPG	→┤Z!!↕ ☼	!!┤Z!!↕ ☼ ☼ ¶┤Z!!↕☼	%	!!¶
		.KOGUVQPPBLGEVKQP◄6JGTOGN1Z YKVJ#OOQPKCPLGEVKQP◄9CVGT 6TGCVOGPV◄WNVKE[NQPG◄((	→┤Z!!↕ ☼ ND◄OKNNK$QPW	→┤┤Z!!↕ ☼ ☼ !!┤┤Z!!↕ ND◄OKNNK$QPW	7	¶!!

C 'OKUUKQP HCEVQTUTGZRTGUUKPNDQHRQNNWVCPVKVVGRTVQPQHYQQPCUVGQODWUVGQEQPXGTVQMIRGTOGVTKEVQPMI◄VQPPG♂DWNVKRD[↕┤┤

(((CDTKE[KNVGT┤

6#$.'ffi┬☼¶╟ffiffi#45'0+%ffi'/+55+10ffi(#%6145ffi(14ffi9 1 1&ffi9#56'☼(+4'&ffi+0&7564+#.ffi$1+.'45

5%%WODGT	’OKUUKOPQWTEG	%QPVTQNXKEG	#XGTCIGOKUUKOPEVQT KPNDEVQP	’OKUUKOPEVQT KPNDEVQP	’OKUUKOPEVQT (CEVQTCVKPI	4GHGTGPEG
!☼¶☼↕→☼!!	9QQF9CUVG☼(KTGF$FQKNGT $CTM(KTGF♫┤↕♫↕↕ ND UVGCO♂	0QPG	→┼↕Z!!↕ ☼	!!╫↕Z!!↕ ☼ ☼ ¶╫↕Z!!↕ ☼	%	!!¶
!☼¶☼↕→☼¶	9QQF9CUVG☼(KTGF$FQKNGT 9QQF◄$CTM(KTGF♫ ┤↕♫↕↕ NDUVGCO♂	0QPG	→┼↕Z!!↕ ☼	!!╫↕Z!!↕ ☼ ☼ ¶╫↕Z!!↕ ☼	%	!!¶
!☼¶☼↕→☼┴	9QQF9CUVG☼(KTGF$FQKNGT 9QQF(KTGF♫ ┤↕♫↕↕ NDUVGCO♂	9TGV5ETWDDGTGFKWO ’HHKEKGPE[	╫↕Z!!↕ ☼ ND◄OKNNKQPW	├╫↕Z!!↕ ☼ ND◄OKNNKQPW ☼ ┴╫↕Z!!↕ ☼ ND◄OKNNKQPW	7	¶¶
		/WNVKRNG[GENQPQ[GKVJQWV (N[CUJ4GKPLGEVKQP◄9GV 5ETWDDGTGFKWO ’HHKEKGPE[	ND◄OKNNKQPW	↑↕↕Z!!↕ ☼ ☼ ←!!↕Z!!↕ ☼ ND◄OKNNKQPW	7	¶┴
		/WNVKRNG[GENQPQ[GKVJQWV (N[CUJ4GKPLGEVKQP	ND◄OKNNKQPW	→┼↕Z!!↕ ☼ ☼ ¶╫!↕Z!!↕ ☼ ND◄OKNNKQPW	7	¶┬
		/WNVKRNG[GENQPQ[GKVJQWV (N[CUJ4GKPLGEVKQP◄52	ND◄OKNNKQPW	┴¶↕Z!!↕ ☼ ☼ ↑!!↕Z!!↕ ☼ ND◄OKNNKQPW	7	¶╫
		0QPG	→┼↕Z!!↕ ☼	!!╫↕Z!!↕ ☼ ☼ ¶╫↕Z!!↕ ☼	%	!!¶
!☼¶☼↕→☼┬	9QQF9CUVG☼(KTGF$FQKNGT $CTM(KTGF♫┤↕♫↕↕ ND UVGCO♂	0QPG	→┼↕Z!!↕ ☼	!!╫↕Z!!↕ ☼ ☼ ¶╫↕Z!!↕ ☼	%	!!¶
!☼¶☼↕→☼┤	9QQF9CUVG☼(KTGF$FQKNGT 9QQF◄$CTM(KTGF♫ ┤↕♫↕↕ NDUVGCO♂	0QPG	→┼↕Z!!↕ ☼	!!╫↕Z!!↕ ☼ ☼ ¶╫↕Z!!↕ ☼	%	!!¶

6#$. ' ffi┬☼¶╢ffiffi%1 0 6+0 7 ' &

5%% 0WODGT	'OKUUKQP 5QWTEG	%QPVTQN &XKEG	#XGTCIG 'OKUUKQP (CEVQT KPND◄ V^C QP	'OKUUKQP (CEVQT 4CPIG KPND◄ V^C QP	'OKUUKQP (CEVQT 4CVKPI	4GHGTGPEG
‼☼¶☼↨←☼↑	9QQF 9CUVG (KTGF $QKNGT 9QQF (KTGF♬ ┤↨♬↨↨ ND UVGCO♂	OWNVKRNG %[ENQPG 9KVJQWV (N[CUJ 4GKPLGEVKQP	WZ‼↨ ☼ ND◄ OKNNKQP $VW	┼┼↨Z‼↨ ☼↑ ☼ ‼┼↨Z‼↨ ☼ ND◄ OKNNKQP $VW	7	¶↑
		0QPG	→┼↨Z‼↨ ☼	‼┼┬Z‼↨ ☼ ☼ ¶┼┬Z‼↨ ☼┬	%	‼¶
		5ETWDDGT	┼┼┬Z‼↨ ND◄ OKNNKQP $VW	¶┼┼Z‼↨ ☼↑☼ ┤ ‼┼↨Z‼↨ ☼	7	¶├
‼☼¶☼↨←☼├	9QQF 9CUVG (KTGF $QKNGT 9QQF %QIGPGTCVKQP♂	0QPG	→┼↨Z‼↨ ☼	‼┼┬Z‼↨ ☼ ☼ ¶┼┬Z‼↨ ☼┬	%	‼¶

[C] 'OKUUKQP HCEVQT TCPIG GZRTGUUGF KP NDQH RQNNWVCPV KPRWV RGT VQP QH YQQF YCUVG EQODWUVGF 'OKUUKQP HCEVQT TCPIG DCUGF QP YGV (CUJ HKTGF YQQF YCUVG YKVJ CXGTCIG RTQRGTVKGU ┤┬☼↨ RGTEGPV OQKUVWTG ┬♬↨↨ $VW◄ ND JKIJGT JGCVKPI XCNWG 6QEQPXGTV VQ TCOU RGT 'GIC,QWNG ◄ ,♬ OWNVKRN[D[↨┤┼┼

┤
'52 'NGEVTQUVCVKE 2TGEKRKVCVQT┼

6#$.'ffi┬☼┴┤ffiffi#45'0+%ffi'/+55+10ffi(#%6145ffi(14ffi911&ffi9#56'☼(+4'&ffi%1//'4%+#.◄+056+676+10#.ffi$1+.'45

5%%0WODGT	'OKUUKOPQWTEG	%QPVTQNGXKEG	#XGTCIGOKUUKQPEVQT KPND◄VQP	'OKUUKQPEVQT4CPIG KPND◄VQP	'OKUUKQPEVQT 4CVKPI
!!☼┴☼↕←☼!!	9QQF◄$CTM☼(KTGF$EKNGT $CTM☼(KTGF♂	0QPG	→┼→↕Z!!↕ ☼	!!┼┬↕Z!!↕ ☼↑ ☼ ¶┼┬↕Z!!↕ ☼┬	%
!!☼┴☼↕←☼¶	9QQF◄$CTM☼(KTGF$EKNGT 9QQF◄$CTM☼(KTGF♂	0QPG	→┼→↕Z!!↕ ☼	!!┼┬↕Z!!↕ ☼↑ ☼ ¶┼┬↕Z!!↕ ☼┬	%
!!☼┴☼↕←☼┴	9QQF◄$CTM☼(KTGF$EKNGT 9QQF☼(KTGF♂	0QPG	→┼→↕Z!!↕ ☼	!!┼┬↕Z!!↕ ☼↑ ☼ ¶┼┬↕Z!!↕ ☼┬	%

5QWTEG4GHGTGPEG

C 'OKUUKOPCEVQTUTGGZRTGUUKPNDQHRQNNWVGPVKVVGRGTVQPQHYQQFCUVEGQODWUVGFQEQPXGTVQMIRGTOGVTKEQPMI◄VQPPG♂DWNVKRD[[┼┼

┬☼¶!!

industrial wood waste-fired tables. This duplication is expected because the same types of boilers and waste composition are found in all three industry categories.

Coal Combustion

Arsenic emission factors for coal-fired utility boilers are presented in Table 4-4.[8,28,29] The table includes emission factors for anthracite, bituminous, subbituminous, and lignite coal-firing boilers.

Arsenic emission factors for coal-fired industrial and commercial/institutional boilers are listed in Tables 4-5[8,28,30,31] and 4-6,[8,28,32] respectively. Control configurations include uncontrolled and single cyclone controlled.

Oil Combustion

Emission factors for specific utility boiler and control device configurations are listed in Table 4-7.[33,34,35] Sources include residual and distillate oil-fired boilers.

Arsenic emission factors for No. 6 oil-fired and distillate oil-fired industrial boilers are presented in Table 4-8.[33] The data used in factor development came from the testing of uncontrolled units.

Arsenic emission factors for oil-fired commercial/institutional boilers are listed in Table 4-9.[33]

Arsenic emission factors for industrial and commercial/institutional waste oil combustion are shown in Tables 4-10 and 4-11, respectively.[15] Emission factors are available for small boilers and two basic types of uncontrolled space heaters: a vaporizing pot-type burner and an air atomizing burner. The use of both blended and unblended fuels are reflected in these factors.[15]

6#$.'ffi┬☼┤ffiffi#45'0+%ffi'/+55+10ffi(#%6145ffi(14ffi%1#.☼(+4'&ffi76+.+6;ffi$1+.'45

5%%0WODGT	'OKUUKOPQWTEG	%QPVTQN &GXKEG	#XGTCIG KPND◄ OKUUKOPQPEVQT OKNNKSQPW	'OKUUKOPQPEVQT KPND◄ OKNNKSQPW	'OKUUKOPQPEVQT 4CVKPI	4GHGTGPEG
‼☼‼☼‼☼¶	#PVJTCEKVG 6TCXGNKPT 1XGTHGGF	%QCN PTCVG 5VQMGT	0QPG	‼┼←‼Z‼↕ ☼┬ ND◄VQP	0&☼ ¶╟┬‼Z‼↕ ☼┬ ND◄VQP	'	¶→
‼☼‼☼‼¶☼‼	$KVWOKPQWQC 2WNXGTK\%F $QVVQO	%QCN 9GV	0QPG	┼┼┴→Z‼↕ ☼┬	☼☼☼	'	→
‼☼‼☼‼¶☼¶	$KVWOKPQWQC 2WNXGTK\%F $QVVQO	%QCN &T[	0QPG	↑┼→┬Z‼↕ ☼┬	☼☼☼	'	→
‼☼‼☼‼¶☼┴	$KVWOKPQWQC %[ENQPG	%QCN 6VTPCEG	0QPG	‼┼‼┤Z‼↕ ☼┬	☼☼☼	'	→
‼☼‼☼‼¶☼┬	$KVWOKPQWQC 5RTGCFGT	%QCN 5VQMGT	0QPG	☼☼☼	¶╟↑┬Z‼↕ ☼┬ ☼ ┼┼¶Z‼↕ ☼┬	'	→
‼☼‼☼‼¶☼┤	$KVWOKPQWQC 6TCXGNKPT 1XGTHGGF	%QCN PTCVG 5VQMGT	0QPG	☼☼☼	┼┼¶Z‼↕ ☼┬ ☼ ‼┼┴Z‼↕ ☼┴	'	→
‼☼‼☼‼¶☼¶‼	5WDDKVWOKPQWQC 2WNXGTK\%F $QVVQO	%QCN 9GV	0QPG	┼┼┴→Z‼↕ ☼┬	☼☼☼	'	→
‼☼‼☼‼¶☼¶¶	5WDDKVWOKPQWQC 2WNXGTK\%F $QVVQO	%QCN &T[	0QPG	↑┼→┬Z‼↕ ☼┬	☼☼☼	'	→
‼☼‼☼‼¶☼¶┴	5WDDKVWOKPQWQC %[ENQPG	%QCN 6VTPCEG	0QPG	‼┼‼┤Z‼↕ ☼┬	☼☼☼	'	→
‼☼‼☼‼¶☼¶┬	5WDDKVWOKPQWQC 5RTGCFGT	%QCN 5VQMGT	0QPG	☼☼☼	¶╟↑┬Z‼↕ ☼┬ ☼ ┼┼¶Z‼↕ ☼┬	'	→

6#$. ' ffi┬☼┤ffiffi%1 0 6+0 7 ' &

5%%WODGT	’OKUUKOPCEVQT 5RQWTEG	%QPVTQN &GXKEG	#XGTCIG KPND◀OKNNKOPW	’OKUUKOPCEVQT KPND◀OKNNKOPW	’OKUUKOPCEVQT 4CVKPI	4GHGTGPEG
!☒!☒↕¶¶	5WDDKVWOKPQ%QCN 6TCXGNKPTCVG 1XGTHGGF5VQMGT	0QPG	☼☼☼	┼┼¶Z!!↕☼┬ ☼ !!┼↕┴Z!!↕☼┴	’	→
!☒!☒↕┴	.KIPKVG%QCN 2WNXGTK\%QCN 9GV $QVVQO	0QPG	¶╟┼Z!!↕ ☼┴	☼☼☼	’	¶←
!☒!☒↕┴	.KIPKVG%QCN 2WNXGTK\%QCN&T[$QVVQO	0QPG	!!┼←Z!!↕ ☼┴	☼☼☼	’	¶←
!☒!☒↕┴☒┴	.KIPKVG%QCN %[ENQPG(QWTPCEG	0QPG	☼☼☼	¶╟┼Z!!↕☼┬ ☼ ↑┴¶Z!!↕☼┬	’	¶←
!☒!☒↕┴☒┬	.KIPKVG%QCN 6TCXGNKPTCVG 1XGTHGGF5VQMGT	0QPG	☼☼☼	!!╟!!↕Z!!↕☼┴ ☼ ¶╟!!↕Z!!↕☼┴	’	¶←
!☒!☒↕┴☒↑	.KIPKVG%QCN 5RTGCFGTVQMGT	0QPG	☼☼☼	┼┼→Z!!↕☼┬ ☼ !!╟!!↕Z!!↕☼┴	’	¶←

C ’OKUUKOPCEVQT 4CVKPI 4GHGTGPEG ZRTGUUKOPDQHRQNNWVGPOKVVGRGTOKNNKOPWQHEQCNEQODWUVGEEQPXGTVQ◀!!↕ ,♬ OWNVKPDI[[↕┼┼

K☒L OGCPFCVGPQ\CXCKNCDNG┼

6#$.'ffi┬☼┤ffiffi#45'0+%ffi'/+55+10ffi(#%6145ffi(14ffi%1#.☼(+4'&ffi+0&7564+#.ffi$1+.'45

5%%WODGT	'OKUUKQPRWTEG	%QPVTQN &GXKEG	#XGTCIG KPNDOKNNKQPW	'OKUUKQPEVQT KPNDOKNNKQPW	'OKUUKQPEVQT 4CPIG KPNDOKNNKQPW	'OKUUKQPEVQT 4CVKPI	4GHGTGPEG
!☼¶☼1!☼┬	#PVJTCEKVGQCN 6TCXGNKPTCVG 1XGTHGGF♂ 5VQMGT	0QPG	!╢←↕Z!↕ ☼┬ ND◄VQP	0&☼ ¶╢┬↕Z!↕ ☼┬ ND◄VQP	'	¶┬	
!☼¶☼1¶☼!!	$KVWOKPCVQCN 2WNXGTK\GFQCN $QVVQO	0QPG	┤╢┬Z!↕ ☼┬	☼☼☼	'	→	
!☼¶☼1¶☼¶	$KVWOKPCVQCN 2WNXGTK\GFQCN $QVVQO	0QPG	↑┤┬Z!↕ ☼┬	☼☼☼	'	→	
!☼¶☼1¶☼┴	$KVWOKPCVQCN %[ENQPG(VTPCEG	0QPG	!╢╢Z!↕ ☼┬	☼☼☼	'	→	
!☼¶☼1¶☼┬	$KVWOKPCVQCN 5RTGCFGTVQMGT	0QPG	☼☼☼	¶╢↑Z!↕☼┬ ☼ ┤╢¶Z!↕☼┬	'	→	
!☼¶☼1¶☼┤	$KVWOKPCVQCN 6TCXGNKPTCVG 1XGTHGGF♂ 5VQMGT	0QPG	☼☼☼	┤╢¶Z!↕☼┬ ☼ !╢┤┴Z!↕☼┴	'	→	
!☼¶☼1¶☼↑	$KVWOKPCVQCN 7PFGTHGGFVQMGT	0QPG	╢←↕Z!↕ ☼┴	☼☼☼	7	┴↕	
!☼¶☼1¶☼!┴	$KVWOKPCVQCN 9G\5NWTT[	0QPG	╢╢┬Z!↕ ☼┤	☼☼☼	7	┴!!	
!☼¶☼1¶☼¶!	5WDDKVWOKPCVQCN 2WNXGTK\GFQCN $QVVQO	0QPG	┤╢┬Z!↕ ☼┬	☼☼☼	'	→	
!☼¶☼1¶☼¶¶	5WDDKVWOKPCVQCN 2WNXGTK\GFQCN $QVVQO	0QPG	↑┤┬Z!↕ ☼┬	☼☼☼	'	→	
!☼¶☼1¶☼╢	5WDDKVWOKPCVQCN %[ENQPG(VTPCEG	0QPG	!╢╢Z!↕ ☼┬	☼☼☼	'	→	

6#$. ' ffi┬☼┤ ┤ffiffi%1 0 6+0 7 ' &ffi

5%%0WODGT	'OKUUKOPQWTEG	%QPVTQN &GXKEG	#XGTCIG KPND◀ OKUUKOPCEVQT KNNKSPW	'OKUUKOPCEVQT KPND◀ OKNNKSPW	'OKUUKOPCEVQT 4CPIG KNNKSPW	'OKUUKOPCEVQT 4CVKPI	4GHGTGPEG
‼☼¶☼↕¶☼╬	5WDDKVWOKPQWN 5RTGCFGT 5VQMGT	0QPG	☼☼☼	¶╬↑┬Z‼↕☼┬ ☼ ┤┤¶Z‼↕☼┬	'	→
‼☼¶☼↕¶☼╣	5WDDKVWOKPQWN 6TCXGNKPTCVG 1XGTHGGF♂ 5VQMGT	0QPG	☼☼☼	┤┤¶Z‼↕☼┬ ☼ ‼┤↕┴Z‼↕☼┴	'	→

C 'OKUUKOPCEVQTUTGZRTGUUKPNDQHRQNNWVCPVKVVGFTOKNNKSPWQHEQCNEQODWUVGEQPXGTWQTCOURGTGIC,QWNG◀/,♂♬ ┤OWNVKRD[[↕┤┴

K☼☼L OGCPFUCVCPQVCXCKNCDNG┤

6#$.' ffi┬☼┤ffiffi#45'0+%ffi' /+55+10ffi(#%6145ffi(14ffi%1#.☼(+4'&ffi%1//'4%+#.◄056+676+10#.ffi$1+.'45

5%%0WODGT	'OKUUKQP5QWTEG	%QPVTQN &GXKEG	#XGTCIG'OKUUKQP (CEVQT KPND◄OKNNKQP$VW	'OKUUKQP(CEVQT4CPIG KPND◄OKNNKQP$VW	'OKUUKQP (CEVQT 4CVKPI	4GHGTGPEG
‼☼┴☼↕‼☼¶	#PVJTCEKVG%QCN6TCXGNKPI)TCVG 1XGTHGGF5VQMGT	0QPG	‼┤↕Z‼↕ ND◄VQP	0&☼ ¶┤↕Z‼↕ ND◄VQP	'	¶→
‼☼┴☼↕¶☼┴	$KVWOKPQWU%QCN%[ENQPG(WTPCEG	0QPG	‼┤┤Z‼↕	☼☼☼	'	→
‼☼┴☼↕¶☼┤	$KVWOKPQWU%QCN2WNXGTK\GF%QCN9GV $QVVQO	0QPG	┤┤┴Z‼↕	☼☼☼	'	→
‼☼┴☼↕¶☼↕	$KVWOKPQWU%QCN2WNXGTK\GF%QCN&T[$QVVQO	0QPG	↕┤Z‼↕	☼☼☼	'	→
‼☼┴☼↕¶☼├	$KVWOKPQWU%QCN1XGTHGGF5VQMGT	0QPG	☼☼☼	┤┤¶Z‼↕ ☼ ‼┤↕Z‼↕	'	→
‼☼┴☼↕¶☼→	$KVWOKPQWU%QCN7PFGTHGGF5VQMGT	5KPING %[ENQPG	¶┤↕Z‼↕	☼☼☼	7	┤¶
‼☼┴☼↕¶☼←	$KVWOKPQWU%QCN5RTGCFGT5VQMGT	0QPG	☼☼☼	¶↕Z‼↕ ☼ ┤┤¶Z‼↕	'	→
‼☼┴☼↕¶¶‼	5WDDKVWOKPQWU%QCN2WNXGTK\GF%QCN 9GV$QVVQO	0QPG	┤┤┴Z‼↕	☼☼☼	'	→
‼☼┴☼↕¶¶¶	5WDDKVWOKPQWU%QCN2WNXGTK\GF%QCN &T[$QVVQO	0QPG	↕┤Z‼↕	☼☼☼	'	→
‼☼┴☼↕¶¶┴	5WDDKVWOKPQWU%QCN%[ENQPG(WTPCEG	0QPG	‼┤┤Z‼↕	☼☼☼	'	→
‼☼┴☼↕¶¶┬	5WDDKVWOKPQWU%QCN5RTGCFGT5VQMGT	0QPG	☼☼☼	¶┤Z‼↕ ☼ ┤┤¶Z‼↕	'	→
‼☼┴☼↕¶¶┤	5WDDKVWOKPQWU%QCN6TCXGNKPI)TCVG 1XGTHGGF5VQMGT	0QPG	☼☼☼	┤┤¶Z‼↕ ☼ ‼┤┴Z‼↕	'	→

[a] 'OKUUKQPHCEVQTUCTGGZRTGUUGFKPND◄QHRQNNWVCPVRGTOKNNKQP$VWQH%QCN%QODWUVGF◄EQPXGTVVQTCOURGTVGIC,QWNG◄◄,☼ ┤OWNVKRN[D[↕┤┴ K☼☼L OGCPUFCVCPQVCXCKNCDNG┤

6#$. ' ffi┬☼├ffiffi#45 ' 0+%ffi ' /+55+1 0ffi(#%6 1 45ffi(1 4ffi1+. ☼(+4 ' &ffi7 6+.+6 ; ffi$ 1+. ' 45

5%% 0WODGT	'OKUUKQP 5QWTEG	%QPVTQN &GXKEG	#XGTCIG 'OKUUKQP (CEVQT KPND◄OKNNKQP $VW	'OKUUKQP (CEVQT 4CPIG KPND◄OKNNKQP $VW	'OKUUKQP (CEVQT 4CVKPI	4GHGTGPEG
‼☼‼☼↨┬☼‼	4GUKFWCN 1KN ☼HKTGF $QKNGT [D]	0QPG	☼☼☼	‼┼↨Z‼↨ ☼├ ☼ ‼├┬Z‼↨ ☼┬	'	┴┴
		(NWG)CU 4GEKTEWNCVKQP	¶╫↨‼Z‼↨ ☼├	├┼↨Z‼↨ ☼↑ ☼ ↑├┬Z‼↨ ☼├	7	┴┬
‼☼‼☼↨┬☼┬	4GUKFWCN 1KN ☼HKTGF $QKNGT [E]	0QPG	☼☼☼	‼┼↨Z‼↨ ☼├ ☼ ‼├┬Z‼↨ ☼┬	'	┴┴
‼☼‼☼↨┬☼├	4GUKFWCN 1KN ☼HKTGF $QKNGT [F]	0QPG	↑├┼Z‼↨ ☼↑	☼☼☼	7	┤
‼☼‼☼↨├☼‼	&KUVKNNCVG 1KN ☼(KTGF) $QKNGT CPF ¶ 1KN	0QPG	┬¶Z‼↨ ☼↑	☼☼☼	'	┴┴

[C] 'OKUUKQP HCEVQT KU GZRTGUUGF KP NDU QH RQNNWVCPV GOKVVGF RGT OKNNKQP $VW QH HKTKPI EQODWUVKQP ☼GCEQPXGTVGF VQ NDU RGT 7GIC,QWNG◄ ,☼ OWNVKRN[D[↨┬┼
[D] 0Q ┼↑ QKN, PQTOCN HKTKPI┼
[E] 0Q ┼↑ QKN, VCPIGPVKCN HKTKPI┼
[F] 0Q ┤ QKN, PQTOCN HKTKPI┼

K☼☼L OGCPU FCVC PQV CXCKNCDNG┼

6#$.'ffi┬☼→┼ffiffi#45'0+%ffi'/+55+10ffi(#%6145ffi(14ffi1+.☼(+4'&ffi+0&7564+#.ffi$1+.'45

5%%0WODGT	'OKUUKOP5QWTEG	%QPVTQNXKEG	#XGTCIGOKUUKOPCEVQT KPND◄OKNNKSUPW	'OKUUKOPCEVQT4CPIG KPND◄OKNNKSUPW	'OKUUKOPCEVQT 4CVKPI
!!☼¶☼↕┬☼!!	4GUKFWCKN)TCFG 1KN	0QPG	☼☼☼	!!┼←↕Z!!↕ ☼ !!┼┼Z!!↕	'
!!☼¶☼↕┬☼!!	&KUVKNNCNKN)TCFGU CPF 1KN	0QPG	┬┼Z!!↕	☼☼☼	'

5QWTEG4GHGTGPEG

C 'OKUUKOPCEVQTUTGZRTGUUKPNDQHRQNNWVCPVKVVGRTOKNNKSPWQHQKNEQODWUVGEQPXGTVQTCOURGTGIC,QWNG◄/,♂ OWNVKRDN[↕┼┼

K☼☼L OGCPFUCVCPQVCXCKNCDNG┼

6#$.'ffi┬☼┤ffiffi#45'0+%ffi'/+55+10ffi(#%6145ffi(14ffi1+.☼(+4'&ffi%1//'4%+#.◄+056+676+10#.ffi$1+.'45

5%%0WODGT	'OKUUKQPQWTEG	%QPVTQNGXKEG	#XGTCIG'OKUUKQPEVQT KPND◄OKNNKQPW	'OKUUKQPEVQT4CPIG KPND◄OKNNKQPW	'OKUUKQPEVQT 4CVKPI
!!☼┤☼┤┬☼┤!!	4GUKFWCKN)TCFG┐ 1KN	0QPG	☼☼☼	!!┤←┤Z!!┤☼┤ ☼ !!┤!!┬Z!!┤☼┬	'
!!☼┤☼┤┤☼┤!!	&KUVKNNCVKN)TCFGU CPF┐ 1KN	0QPG	┬┤┐Z!!┤ ☼┐	☼☼☼	'

5QWTEG4GHGTGPEG

C 'OKUUKQPHCEVQTUTGGZRTGUUKPNDQHRQNNWVCPVKVVGRGTOKNNKQPWQHQKNEQODWUVGRQEQPXGTWQTCOURGTGIC,QWNG◄/,♂ OWNVKRDN[[┤┬┤

K☼☼L OGCPFUCVCPQVCXCKNCDNG┤

┬☼┤

6#$. ' ffi┬☼!! ↕┤ffiffi#45 ' 0+%ffi ' / +55+1 0ffi (#%6 1 45ffi (1 4ffi 9 #56 ' ffi 1+. ☼(+4 ' &ffi+0 & 7564+# . ffi$ 1+. ' 45

5%%0WODGT	'OKUUKOPQWTEG	%QPVTQNGXKEG	#XGTCIG OKUUKOPEVQT KPND◄!!↕↕↕ ICN[C]	'OKUUKOPEVQT4CPIG KPND◄!!↕↕↕ ICN[C]	'OKUUKOPEVQT 4CVKPI
!!☼┤☼↕↕!!☼!!┴	9CUVGKN #KT#VQOK\GF $WTPGT	0QPG	↑┤↕↕Z!!↕ ☼¶	☼☼☼	&
!!☼┤☼↕↕!!☼!!┬	9CUVGKN 8CRQTK\KPI$WTPGT	0QPG	¶┤↕Z!!↕	☼☼☼	&

5QWTEG4GHGTGPEG

[C] 'OKUUKOPCEVQTCTGZRTGUUGFNDQHRQNNWVGPVKVVGRGT!!↕↕↕ ICNNQPQHYCUVGKNDWTPGF6QEQPXGTVQMI RGT!!↕↕↕ NKVGTUMI◄!!↕↕↕ .♫ OWNVKRN[D[↕┤!!¶┤

K☼☼L OGCPFUCVCPQVCXCKNCDNG┤

┬☼!!

6#$.'ffi┬☼!!┼ffiffi#45'0+%ffi'/+55+10ffi(#%6145ffi(14ffi9#56'ffi1+.☼(+4'&ffi%1//'4%+#.◄+056+676+10#.ffi$1+.'45

5%%0WODGT	'OKUUKOPQWTEG	%QPVTQNGXKEG	#XGTCIGOKUUKQPEVQT KPND◄!↕↕↕ ICN[C]	'OKUUKQPEVQT4CPIG KPND◄!↕↕↕ ICN[C]	'OKUUKQPEVQT 4CVKPI
!☼┴☼┴!┴☼┐	9CUVGKN 5OCNNQKNGTU	0QPG	!┼!↕Z!↕	☼☼☼	&
!☼┼☼↕┐☼!┴	9CUVGKN #KT#VQOK\GF $WTPGT	0QPG	↑┼↕Z!↕ ☼	☼☼☼	&
!☼┼☼↕┐☼!┴	9CUVGKN 8CRQTK\KPSWTPGT	0QPG	¶┼↕Z!↕	☼☼☼	&

5QWTEG4GHGTGPEG

[C] 'OKUUKOPCEVQTUTGZRTGUUKPNDQHRQNNWVGPVKVVGRGT!↕↕↕ ICNNQPQHYCUVQKNDWTPGF6QEQPXGTVQMIRGT!↕↕↕ NKVGTUMI◄!↕↕↕ .♂♪ OWNVKRN[D[↕┼!¶┼

K☼☼L OGCPFUCVCPQVCXCKNCDNG┼

┬☼┤

Solid Waste Combustion

Arsenic emission factors for solid-waste fired utility boilers are presented in Table 4-12.[36] The only control configuration represented is an ESP. Additional data regarding emissions from combustion of refuse derived fuel may be available from the Electric Power Research Institute (phone 415-855-2000) in Report No. TR104614.

4.1.3 Source Locations

Fuel economics and environmental regulations affect regional use patterns for combustion sources. Most of the U.S. utility coal-firing capability is east of the Mississippi River, with the significant remainder being in the Rocky Mountain region. Natural gas is used primarily in the South Central States and California. Oil is predominantly used in Florida and the Northeast. Information on precise utility plant locations can be obtained by contacting utility trade associations, such as the Electric Power Research Institute in Palo Alto, California, the Edison Electric Institute in Washington, D.C. (202-828-7400), or the U.S. Department of Energy (DOE) in Washington, D.C. Publications by EPA and DOE on the utility industry are useful in determining specific facility locations, sizes, and fuel use.

Industrial and commercial coal combustion sources are located throughout the United States, but tend to be concentrated in areas of industry and larger population. Most of the coal-fired industrial boiler sources are located in the Midwest, Appalachian, and Southeast regions. Industrial wood-fired boilers tend to be located almost exclusively at pulp and paper, lumber products, and furniture industry facilities. These industries are concentrated in the Southeast, Gulf Coast, Appalachian, and Pacific Northwest regions. Trade associations such as the American Boiler Manufacturers Association in Arlington, Virginia (703-522-7350) and the Council of Industrial Boiler Owners in Fairfax Station, Virginia (703-250-9042) can provide information on industrial boiler locations and trends.[37,38]

6#$.'ffi┬☼!¶┼ffiffi#45'0+%ffi'/+55+10ffi(#%614ffi(14ffi51.+&ffi9#56'☼(+4'&ffi76+.+6;ffi$1+.'45

5%%0WODGT	'OKUUKQP5QWTEG	%QPVTQNGXKEG	#XGTCIG'OKUUKQP KPND◄VQP	'OKUUKQP4CPIG KPND◄VQP	'OKUUKQP4CVKPI
!☼!☼!¶☼!	5QNKP5CUVG	'52	↑┼→┼Z!!↕	┼¶Z!!↕ ☼ ☼ !┼┬↕Z!!↕ ☼┬	7

5QWTEG4GHGTGPE┼G

C'OKUUKQP HPCEVQTCUTGZRTGUUKPNDQHRQNNWVGPVKVVGRGTVQPQHYCUVEGQODWUVGRQEQPXGTVQMIRGTOGVTKEQPMI◄VQPPGOWNVKRD[[┼┼

K☼☼L OGCPFUCVCPQVCXCKNCDNG┼

'52 'NGEVTQUVC2TKGEKRKVCVQT┼

┬☼┬

4.2 Hazardous Waste Incineration

Hazardous waste, as defined by RCRA in 40 CFR Part 261,[17] includes a wide variety of waste materials. Hazardous wastes are produced in the form of liquids (e.g., waste oils, halogenated and nonhalogenated solvents, other organic liquids, and pesticides/herbicides) and sludges and solids (e.g., halogenated and nonhalogenated sludges and solids, dye and paint sludges, resins, and latex). The arsenic content of hazardous waste varies widely, but arsenic could be emitted from the incineration of any of these types of hazardous waste. Based on a 1986 study, total annual hazardous waste generation in the United States was approximately 292 million tons.[39] Only a small fraction of the waste (less than 1 percent) was incinerated. In addition, the U.S. EPA has scheduled rulemaking to develop MACT standards for hazardous waste combustors and cement kilns. The proposed standard should reduce arsenic emissions and is scheduled to be promulgated no later than 2000.

Based on an EPA study conducted in 1983, the major types of hazardous waste streams incinerated were spent nonhalogenated solvents and corrosive and reactive wastes contaminated with organics. Together, these accounted for 44 percent of the waste incinerated. Other prominent wastes included hydrocyanic acid, acrylonitrile bottoms, and nonlisted ignitable wastes.[40]

Industrial kilns, boilers, and furnaces are used to burn hazardous waste. They use the hazardous waste as fuel to produce commercial products such as cement, lime, iron, asphalt, or steam. In fact, the majority of hazardous waste generated in the United States is currently disposed of in cement kilns. Hazardous waste, which is an alternative to fossil fuels for energy and heat, is used at certain commercial facilities as a supplemental fuel. In the process of producing energy and heat, the hazardous wastes are subjected to high temperatures for a sufficient time to volatilize metals in the waste.

4.2.1 Process Description

Hazardous waste incineration employs oxidation at high temperatures (usually 1,650(F or greater) to destroy the organic fraction of the waste and reduce volume. A diagram of the typical process component options in a hazardous waste incineration facility is provided in Figure 4-5.[39] The diagram shows the major subsystems that may be incorporated into a hazardous waste incineration system: waste preparation and feeding, combustion chamber(s), air pollution control, and residue/ash handling.

Five types of hazardous waste incinerators are currently available and in operation: liquid injection, rotary kiln, fixed-hearth, fluidized-bed, and fume injection.[41] Additionally, a few other technologies have been used for incineration of hazardous waste, including ocean incineration vessels and mobile incinerators. These latter processes are not in widespread use in the United States and are not discussed below.

Liquid Injection Incinerators

Liquid injection combustion chambers are used for pumpable liquid waste, including some low-viscosity sludges and slurries. Liquid injection units are usually simple, refractory-lined cylinders (either horizontally or vertically aligned) equipped with one or more waste burners. The typical capacity of liquid injection units is about 8 to 28 million Btu/hour. Figure 4-6 presents a schematic diagram of a typical liquid injection unit.[39,41]

Rotary Kiln Incinerators

Rotary kiln incinerators are used for destruction of solid wastes, slurries, containerized waste, and liquids. Because of their versatility, these units are most frequently used by commercial off-site incineration facilities. Rotary kiln incinerators generally consist of two combustion chambers: a rotating kiln and an afterburner. The rotary kiln is a cylindrical refractory-lined shell mounted on a slight incline. The primary function of the kiln is to convert solid wastes to gases, which occurs through a series of volatilization, destructive distillation, and

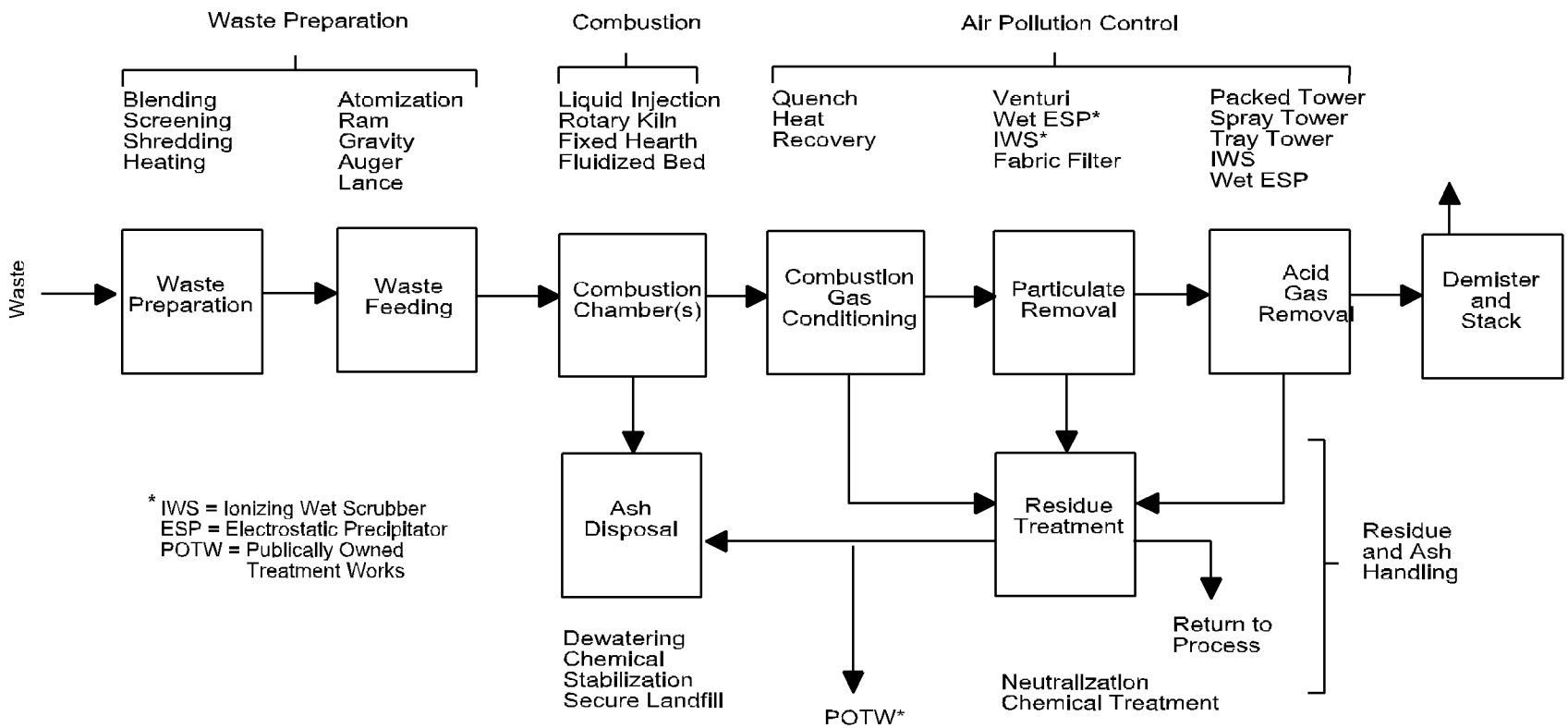

Figure 4-5. Typical Process Component Options in a Hazardous Waste Incineration Facility

Source: Reference 39.

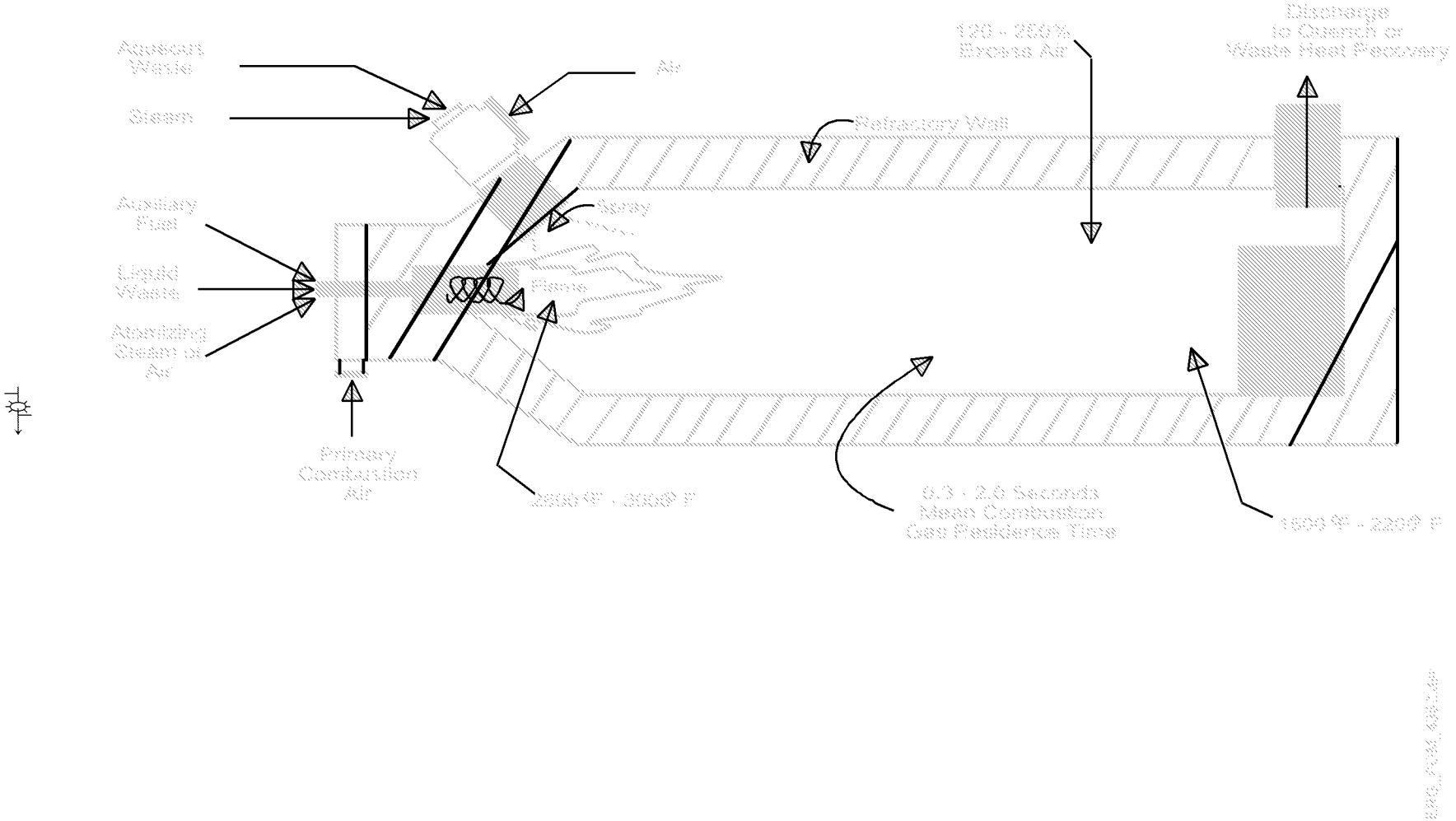

Figure 4-6. Typical Liquid Injection Combustion Chamber

5QWTEG4GHGTGPEG

partial combustion reactions. The typical capacity of these units is about 10 to 60 million Btu/hour.

Figure 4-7 presents a schematic diagram of a typical rotary kiln unit.[39] An afterburner is connected directly to the discharge end of the kiln. The afterburner is used to ensure complete combustion of flue gases before their treatment for air pollutants. A tertiary combustion chamber may be added if needed. The afterburner itself may be horizontally or vertically aligned, and functions on much the same principles as the liquid injection unit described above. Both the afterburner and the kiln are usually equipped with an auxiliary fuel-firing system to control the operating temperature.

Fixed-Hearth Incinerators

Fixed-hearth incinerators (also called controlled-air, starved-air, or pyrolytic incinerators) are the third major technology used for hazardous waste incineration.[39] Figure 4-8 presents a schematic diagram of a typical fixed-hearth unit.[39,41] This type of incinerator may be used for the destruction of solid, sludge, and liquid wastes. Fixed-hearth units tend to be of smaller capacity (typically 5 million Btu/hour) than liquid injection or rotary kiln incinerators because of physical limitations in ram feeding and transporting large amounts of waste materials through the combustion chamber.

Fixed-hearth units consist of a two-stage combustion process similar to that of rotary kilns. Waste is ram-fed into the primary chamber and burned at about 50 to 80 percent of stoichiometric air requirements. This starved-air condition causes most of the volatile fraction to be destroyed pyrolitically. The resultant smoke and pyrolysis products pass to the secondary chamber, where additional air and, in some cases, supplemental fuel, is injected to complete the combustion.[39]

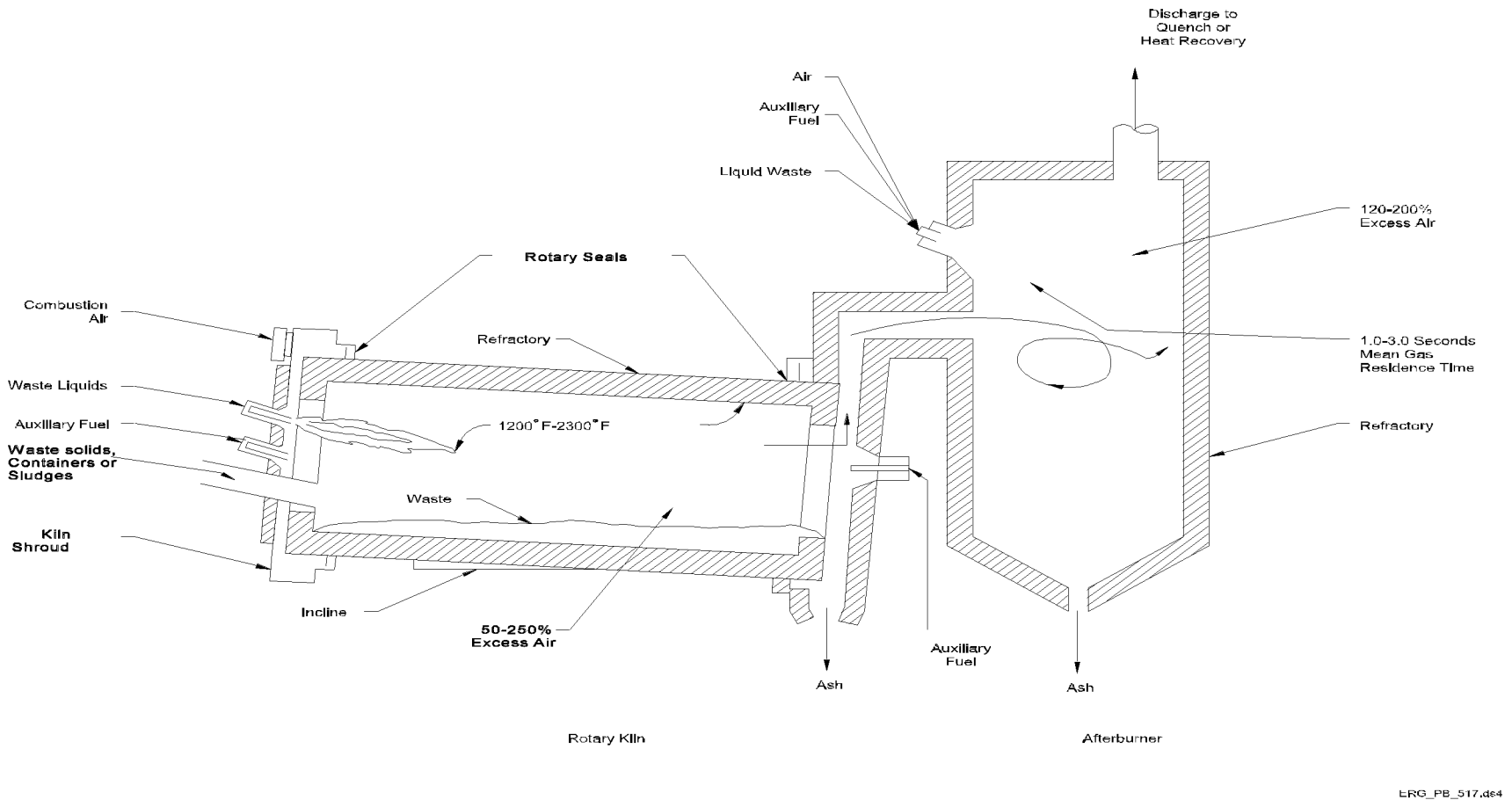

(KMVTGffi┬☼├ffiffi6 [RKECNfi4QJCT[ffi -KNP◀#HVGTDWTPGTffi%QODWUKQPffi%JCODGT

5QWTEG4GHGTGPEG

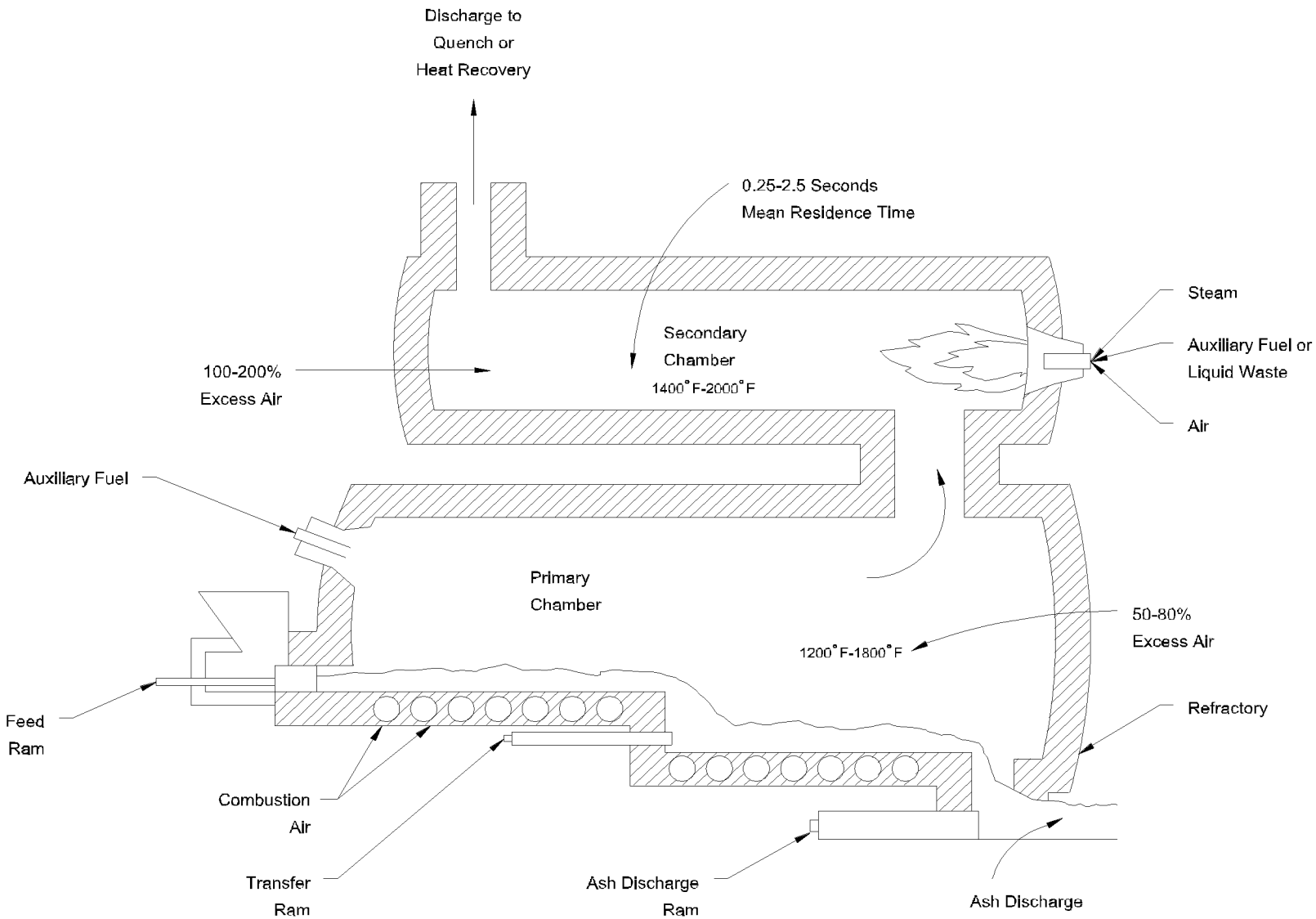

Figure 4-8. Typical Fixed-Hearth Combustion Chamber

FRG_PB_518.ds4

Source: Reference 39.

Fluidized-Bed Incinerators

Fluidized-bed incinerators (combustors), which are described in Section 4.4.1 of this report, have only recently been applied to hazardous waste incineration. FBCs used to dispose of hazardous waste are very similar to those used to incinerate sewage sludge except for their additional capability of handling liquid wastes.

FBCs are suitable for disposing of combustible solids, liquids, and gaseous wastes. They are not suited for irregular or bulky wastes, tarry solids, or other wastes that leave residues in the bed.[42] Fluidized-bed combustion chambers consist of a single refractory-lined combustion vessel partially filled with inert granular material (e.g., particles of sand, alumina, and sodium carbonate).[39] The typical capacity of this type of incinerator is 45 million Btu/hour.

Fume Injection Incinerators

Fume injection incinerators are used exclusively to destroy gaseous or fume wastes. The combustion chamber is comparable to that of a liquid-injection incinerator (Figure 4-6) in that it usually has a single chamber, is vertically or horizontally aligned, and uses nozzles to inject the waste into the chamber for combustion. Waste gases are injected by pressure or atomization through the burner nozzles. Wastes may be combusted solely by thermal or catalytic oxidation.

Emission Control Techniques

The types of incinerators used for hazardous waste combustion are similar to the incinerators used by the other combustion sources discussed earlier in this section. However, the components in the hazardous waste stream vary extensively. The hazardous waste stream may include a variety of liquid, solid, or sludge wastes considered hazardous by RCRA. The hazardous waste stream may also include wastes generated by a variety of sources (e.g., medical, municipal, and sewage sludge).

Controlling arsenic emissions is partly accomplished by monitoring the temperature of the combustion bed. Arsenic compounds vaporize at elevated temperatures. The higher the temperature, the larger the fraction of arsenic vaporized. As the temperature drops, a fraction of the arsenic condenses. Collection of arsenic condensed on PM occurs in the APCD.[43]

4.2.2 Emission Factors

The composition of the hazardous waste varies tremendously in the hazardous waste incineration industry, such that the arsenic content of the waste stream also varies widely. The arsenic content of the waste being combusted dictates whether or not significant arsenic emissions occur.

One emission factor for arsenic is reported in Table 4-13.[44] Additional emission factor data are not readily available. However, relevant test data may be available in Volume II of the draft Technical Support Document for the Hazardous Waste Combustion Rule (February 1996). Also, emission factor data may be available in databases developed by trade associations or other industry groups. [45]

4.2.3 Source Location

Currently, 162 permitted or interim status incinerator facilities, having 190 units, are in operation in the U.S. Another 26 facilities are proposed (i.e., new facilities under construction or permitting). Of the above 162 facilities, 21 facilities are commercial facilities that burn about 700,000 tons of hazardous waste annually. The remaining 141 are on-site or captive facilities and burn approximately 800,000 tons of waste annually.

6#$.'ffi┬☼!!┴┤ffiffi#45'0+%ffi'/+55+10ffi(#%6145ffi(14ffi*#<#4&175ffi9#56'ffi+0%+0'4#6+10

5%%0WODGT	'OKUUKQPEVQT 5QWTEG	%QPVTQNGXKEG	#XGTCIG 'OKUUKQPEVQT	'OKUUKQPEVQT 4CPIG	'OKUUKQPEVQT 4CVKPI
┤☼┴☼↕┤☼↕!!	*C\CTFQW9CUVG	#DUQTDGT◄95EVTWDDGTU	↑┤┴┐Z!!↕ ND◄ND	┤┤↑Z!!↕ ☼┬ ☼ ┤┤┴Z!!↕ ☼┬	7

5QWTEG4GHGTGPEG

┬☼┬

4.3 Municipal Waste Combustion

4.3.1 Process Description

Municipal waste combustors (MWCs) burn garbage and other nonhazardous solid waste, commonly called municipal solid waste (MSW). Three main types of combustors are used to combust MSW: mass burn, refuse-derived fuel-fired (RDF), and modular. Each type is discussed below.

Mass Burn Combustors

In mass burn units, MSW is combusted without any preprocessing other than removal of items too large to go through the feed system. In a typical mass burn combustor, refuse is placed on a grate that moves through the combustor. Combustion air in excess of stoichiometric amounts is supplied both below (underfire air) and above (overfire air) the grate. Mass burn combustors are erected at the site (as opposed to being prefabricated) and range in size from 50 to 1,000 tons/day of MSW throughput per unit. Mass burn combustors can be divided into mass burn/waterwall (MB/WW), mass burn/rotary waterwall (MB/RC), and mass burn/refractory wall (MB/REF) designs.

The walls of a MB/WW combustor are constructed of metal tubes that contain pressurized water and recover radiant heat for production of steam and/or electricity. A typical MB/WW combustor is shown in Figure 4-9. With the MB/RC combustor, a rotary combustion chamber sits at a slight angle and rotates at about 10 revolutions per hour, causing the waste to advance and tumble as it burns. The combustion cylinder consists of alternating water tubes and perforated steel plates. Figure 4-10 illustrates a simplified process flow diagram for a MB/RC. MB/REF designs are older and typically do not include any heat recovery. One type of MB/REF combustor is shown in Figure 4-11.[46]

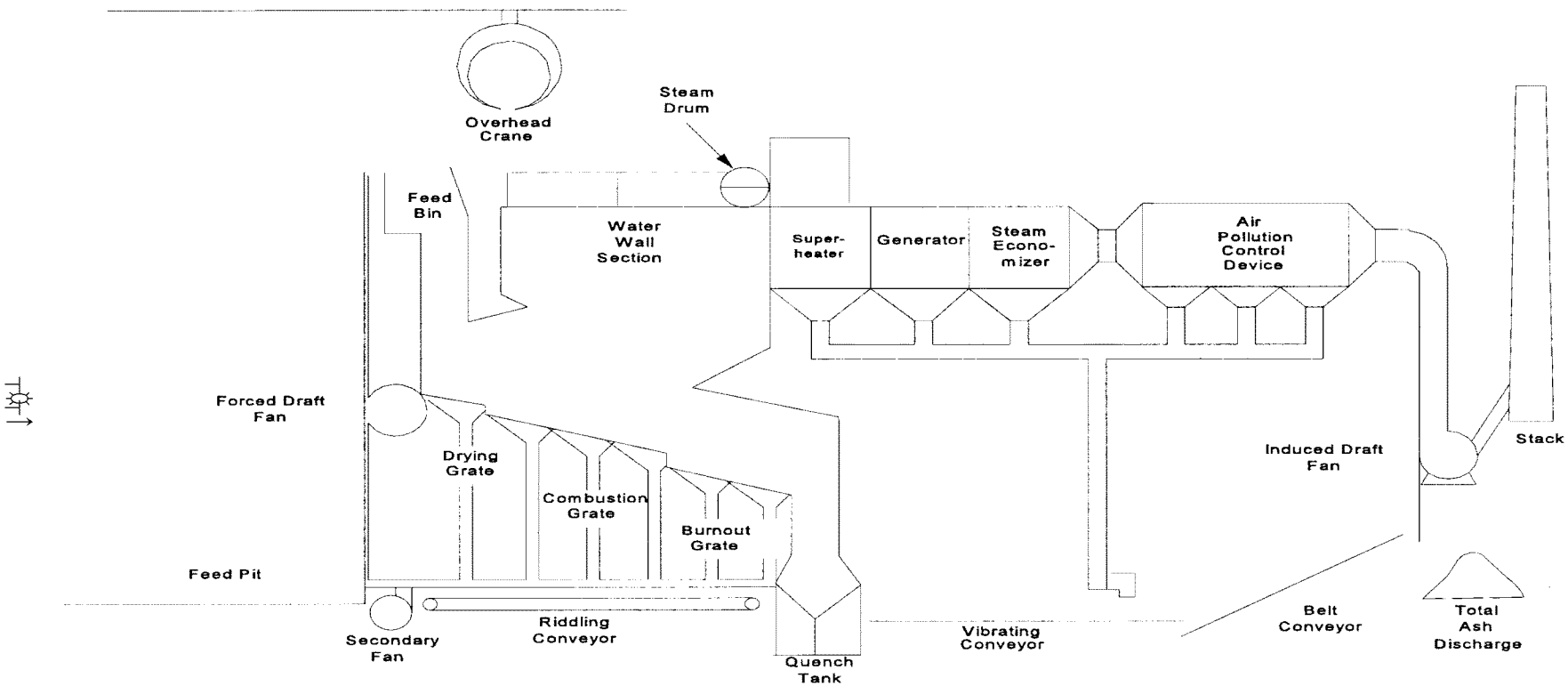

Figure 4-9. Typical Mass Burn Waterwall Combustor

Source: Reference 46.

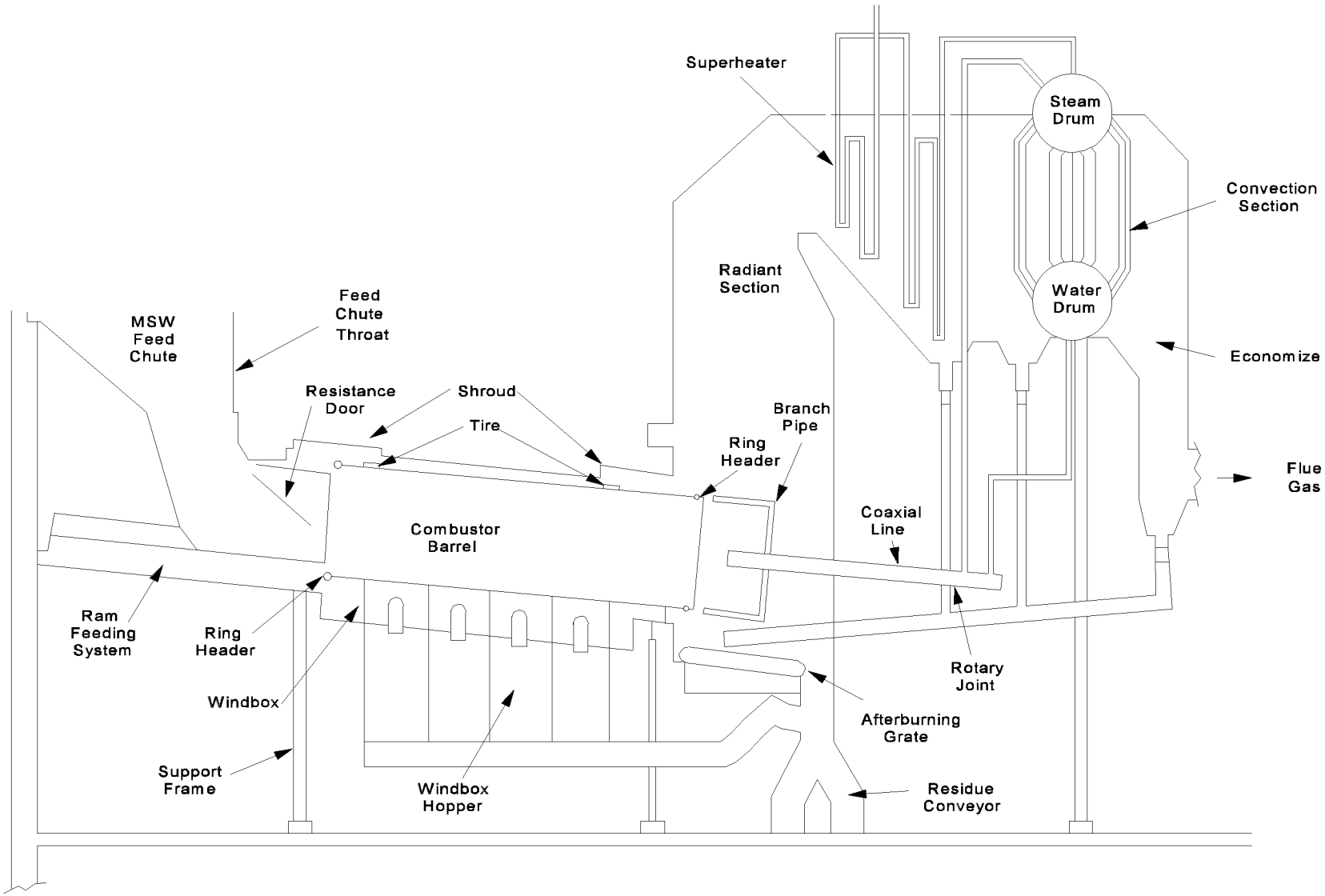

Figure 4-10. Simplified Process Flow Diagram, Gas Cycle for a Mass Burn/Rotary Waterwall Combustor

Source: Reference 46.

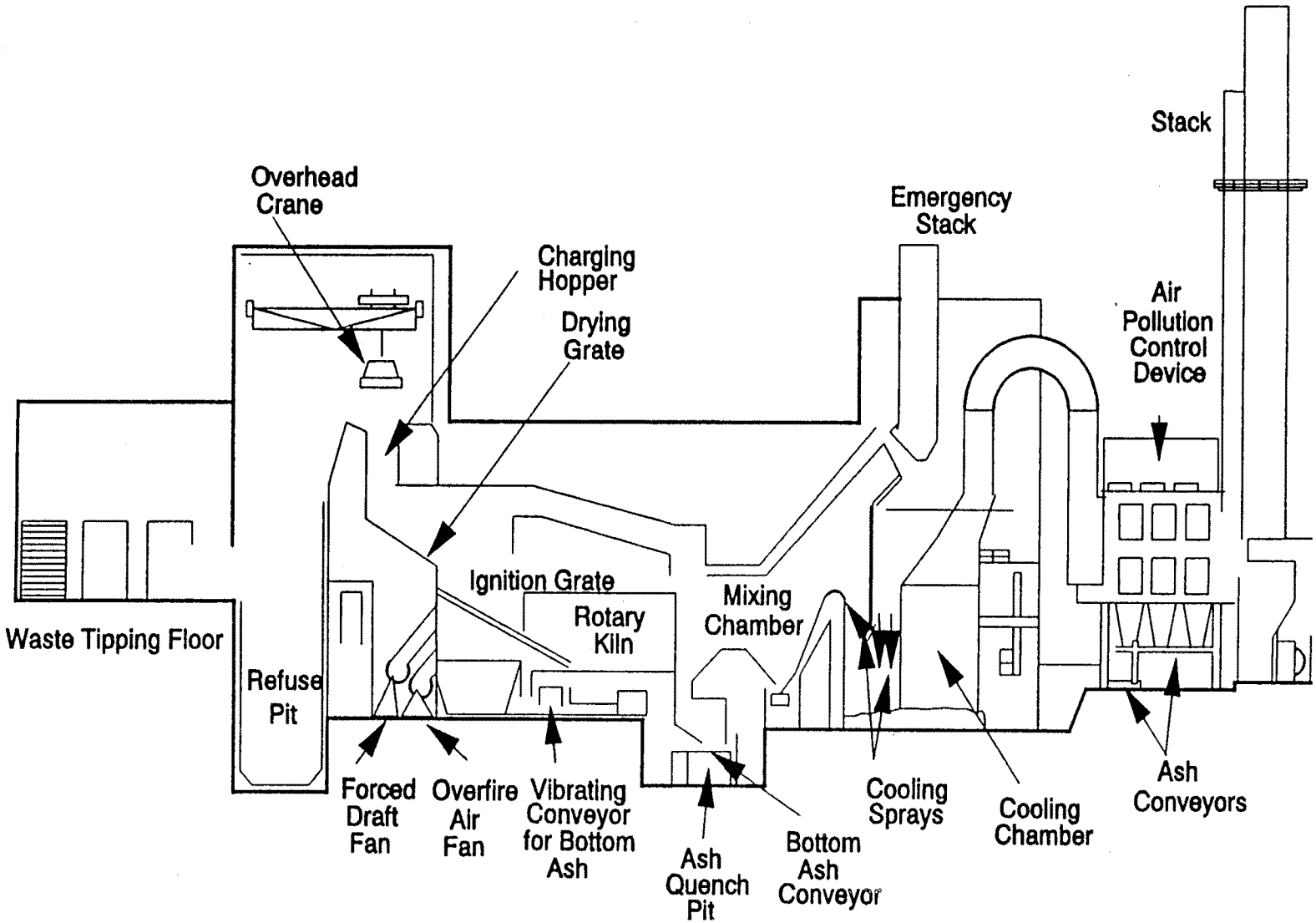

Figure 4-11. Mass Burn Refractory-Wall Combustor with Grate/Rotary Kiln

Source: Reference 46.

RDF-Fired Combustors

RDF-fired combustors burn processed waste that varies from shredded waste to finely divided fuel suitable for co-firing with pulverized coal. Combustor sizes range from 320 to 1,400 tons/day. There are three major types of RDF-fired combustors: dedicated RDF combustors, which are designed to burn RDF as a primary fuel; coal/RDF co-fired combustors; and fluidized-bed combustors (FBCs) where waste is combusted on a turbulent bed of limestone, sand, silica or aluminum.

A typical RDF-fired combustor is shown in Figure 4-12.[46] Waste processing usually consists of removing noncombustibles and shredding, which generally raises the heating value and provides a more uniform fuel. The type of RDF used depends on the boiler design. Most boilers designed to burn RDF use spreader stokers and fire fluff RDF in a semi-suspension mode

Modular Combustors

Modular combustors are similar to mass burn combustors in that they burn waste that has not been pre-processed, but they are typically shop-fabricated and generally range in size from 5 to 140 tons/day of MSW throughput. One of the most common types of modular combustors is the starved-air or controlled-air type, which incorporates two combustion chambers. A process diagram of a typical modular starved-air (MOD/SA) combustor is presented in Figure 4-13.[46] Air is supplied to the primary chamber at sub-stoichiometric levels. The incomplete combustion products (CO and organic compounds) pass into the secondary combustion chamber, where additional air is added and combustion is completed. Another design is the modular excess air (MOD/EA) combustor, which consists of two chambers, similar to MOD/SA units, but is functionally like the mass burn unit in that it uses excess air in the primary chamber.

Emission Control Techniques

Arsenic is present in a variety of MSW streams, including paper, inks, batteries, and metal cans. Because of the wide variability in MSW composition, arsenic concentrations are

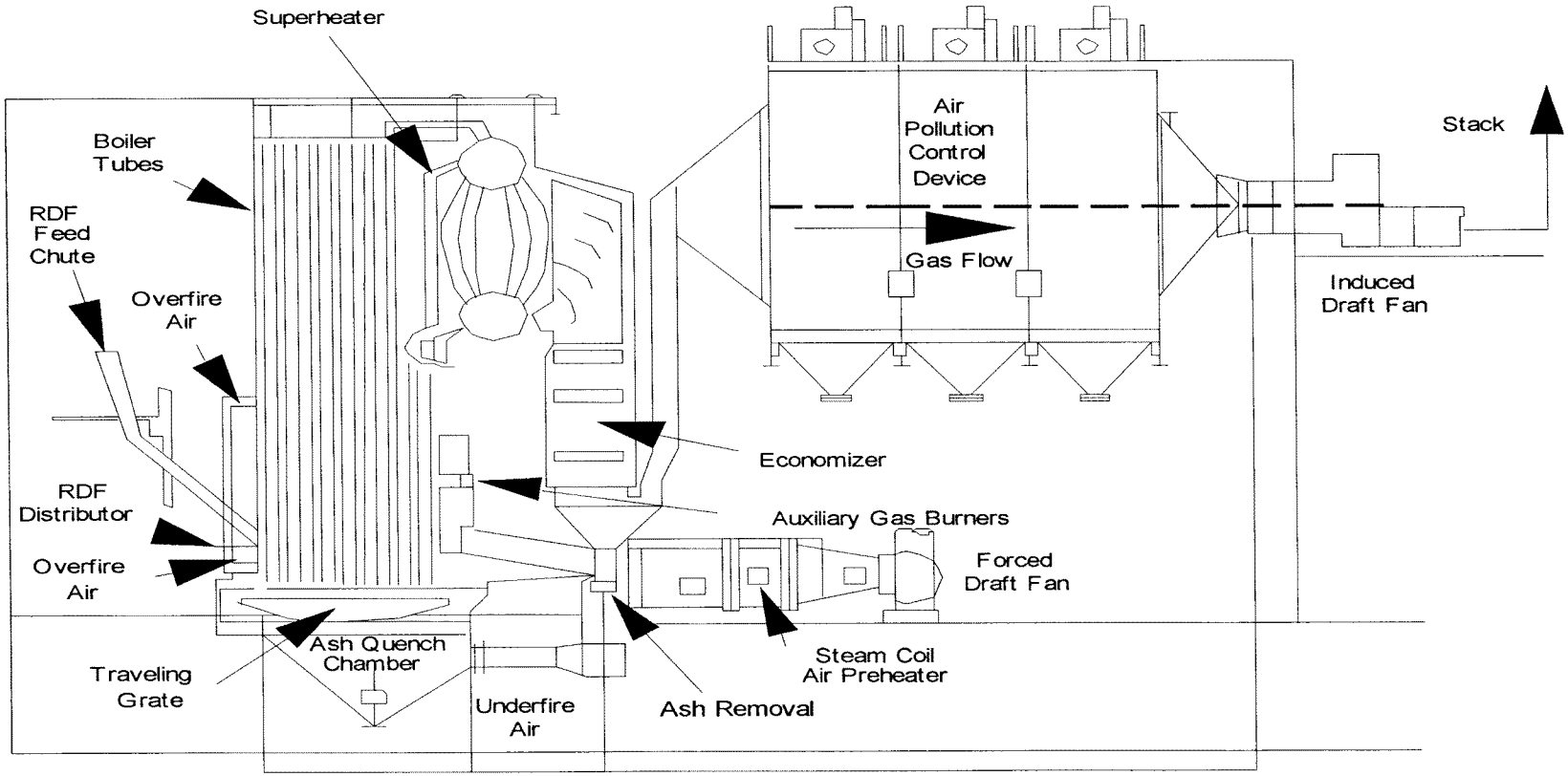

Figure 4-12. Typical RDF-Fired Spreader Stoker Boiler

Source: Reference 46.

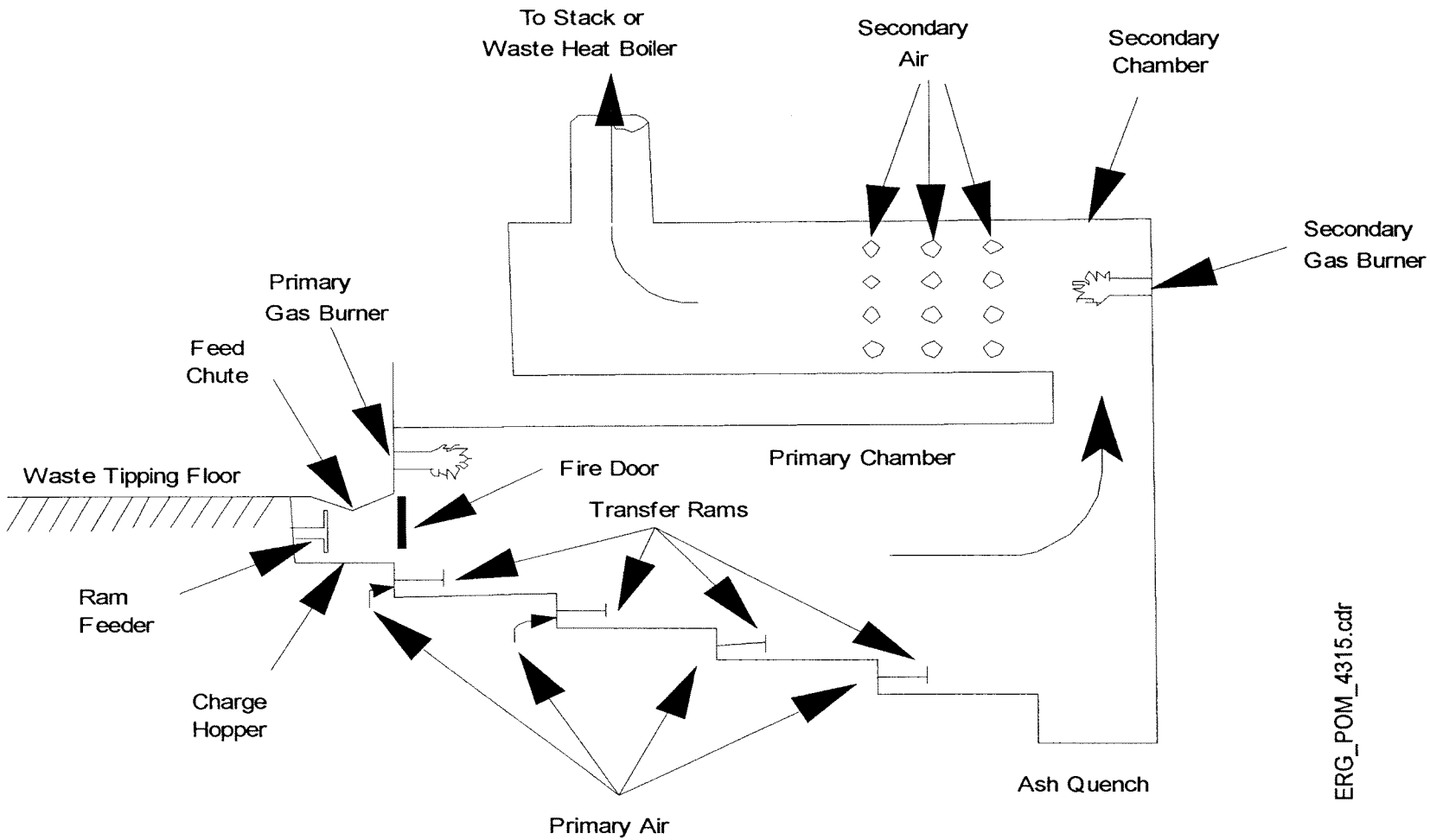

Figure 4-13. Typical Modular Starved-Air Combustor with Transfer Rams

Source: Reference 46.

highly variable and are independent of combustor type. Because the vapor pressure of arsenic is such that condensation occurs onto particulates in the flue gas, arsenic can be effectively removed by a PM control device.[46]

Because arsenic is usually emitted from MWCs in particulate form, the control of arsenic is most frequently accomplished through the use of an ESP or fabric filter (FF), which are common PM control techniques. Although other PM control technologies (e.g., cyclones, electrified gravel beds, and venturi scrubbers) are available, they are not as effective as the ESP or FF at removing PM and so are seldom used on existing systems.[46] Well-designed ESPs and FFs operated at 450(F or less remove over 97 percent of arsenic and other metals.[47]

The most common types of ESPs are plate-and-wire units, in which the discharge electrode is a bottom-weighted or rigid wire, and flat plate units, which use flat plates rather than wires as the discharge electrode. As a general rule, the greater the amount of collection plate area, the greater the PM collection efficiency. After the charged particles are collected on the grounded plates, the resulting dust layer is removed from the plates by rapping or washing, and collected in a hopper. As the dust layer is removed, some of the collected PM becomes re-entrained in the flue gas. To ensure good PM collection efficiency during plate cleaning and electrical upsets, ESPs have several fields located in series along the direction of flue gas flow that can be energized and cleaned independently. Particles re-entrained when the dust layer is removed from one field can be recollected in a downstream field. Because of this phenomenon, increasing the number of fields generally improves PM removal efficiency.[46]

4.3.2 Emission Factors

Available arsenic emission factor data for several types of MWCs are provided in Table 4-14.[46] The column labeled "Emission Source" identifies the main characteristics of each incinerator type. For some types of incinerators, a range of factors is provided that represents different sample test runs of the same source. Generally, there is a wide range in the emission factors associated with MWCs. This range is attributable to the variability of waste compositions and to the operating practices and effectiveness of control devices.[48] Waste composition can

6#$.'ffi┬☼!!┬┤ffiffi#45'0+%ffi'/+55+10ffi(#%6145ffi(14ffi/70+%+2#.ffi9#56'ffi%1/$756+10ffi5174%'5

5%%0WODGT	'OKUUKQPQWTEG	%QPVTQNGXKEG	#XGTCIG'OKUUKQPEVQT KPND◄VQP	'OKUUKQPEVQT4CPIG KPND◄VQP	'OKUUKQPEVQT 4CVKPI
┤☼!!☼!!☼!!	5VCTXGF☼#KT7WNVKRNG☼ %JCODGT	0QPG	↑┤↑←Z!!↕ ☼┬	☼☼☼	%
		'52	!!┤↕┤Z!!↕ ☼┬	☼☼☼	&
┤☼!!☼!!☼┴	4GHWUG☼&GTKXGF(XGFN	0QPG	┤┤←┬Z!!↕ ☼┼	☼☼☼	$
		'52	!!┤┴┬Z!!↕ ☼┬	☼☼☼	&
		5RTC[&T[GT◄((	┤┤!!Z!!↕ ☼↑	☼☼☼	#
		5RTC[&T[GT◄'52	!!┤↕→Z!!↕ ☼┤	☼☼☼	&
┤☼!!☼!!☼┬	/CUU$WTP4GHTCEVQT9CNN %QODWUVQT	0QPG	┬┴┤Z!!↕ ☼┴	☼☼☼	#
		5RTC[&T[GT◄((	┬┤¶┴Z!!↕ ☼↑	☼☼☼	#
		5RTC[&T[GT◄'52	!!┤┴┤Z!!↕ ☼┤	☼☼☼	#
		&T[5QTDGPV +PLGEVKQP◄((	!!┤↕┴Z!!↕ ☼┤	☼☼☼	%
		'52	¶┤!!Z!!↕ ☼┤	☼☼☼	#
┤☼!!☼!!☼┤	/CUU$WTP9CVGTYCNN %QODWUVQT	0QPG	┬┴┤Z!!↕ ☼┴	☼☼☼	#
		5RTC[&T[GT◄((	┬┤¶┴Z!!↕ ☼↑	☼☼☼	#
		5RTC[&T[GT◄'52	!!┤┴┤Z!!↕ ☼┤	☼☼☼	#
		&T[5QTDGPV +PLGEVKQP◄((	!!┤↕┴Z!!↕ ☼┤	☼☼☼	%
		'52	¶┤!!Z!!↕ ☼┤	☼☼☼	#
┤☼!!☼!!☼↑	/CUU$WTP4QVCT9CVGTYCNN %QODWUVQT	0QPG	┬┴┤Z!!↕ ☼┴	☼☼☼	#
		5RTC[&T[GT◄((	┬┤¶┴Z!!↕ ☼↑	☼☼☼	#
		5RTC[&T[GT◄'52	!!┤┴┤Z!!↕ ☼┤	☼☼☼	#

6#$.'ffi┬☼!┬┤ffiffi%106+07'&

5%%0WODGT	'OKUUKQPQWTEG	%QPVTQNGXKEG	#XGTCIGOKUUKQPEVQT KPND◄VQP	'OKUUKQPEVQT4CPIG KPND◄VQP	'OKUUKQPEVQT 4CVKPI
┤☼!!☼↕!!☼↑ EQPVKPWGF♂	/CUU$WTP4QVCT9CVGTYCNN %QODWUVQT	&T[5QTDGPV +PLGEVKQP◄((	!!┤↕┴Z!!↕ ☼	☼☼☼	%
		'52	¶┤!!┤Z!!↕ ☼	☼☼☼	#
┤☼!!☼↕!!☼┤	/QFWNCT7EGU#KT %QODWUVQT	0QPG	┬┴┤Z!!↕ ☼┴	☼☼☼	#
		5RTC[&T[GT◄((	┬┤¶┴Z!!↕ ☼↑	☼☼☼	#
		5RTC[&T[GT◄52	!!┤┴┤Z!!↕ ☼	☼☼☼	#
		&T[5QTDGPV +PLGEVKQP◄((	!!┤↕┴Z!!↕ ☼	☼☼☼	%
		'52	¶┤!!┤Z!!↕ ☼	☼☼☼	#
┤☼┴☼↕!!☼!!!	/CUU$WTP4GHTCEVQT9CNN %QODWUVQT	0QPG	┬┴┤Z!!↕ ☼┴	☼☼☼	#
		5RTC[&T[GT◄((	┬┤¶┴Z!!↕ ☼↑	☼☼☼	#
		5RTC[&T[GT◄52	!!┤┴┤Z!!↕ ☼	☼☼☼	#
		&T[5QTDGPV +PLGEVKQP◄((	!!┤↕┴Z!!↕ ☼	☼☼☼	%
		'52	¶┤!!┤Z!!↕ ☼	☼☼☼	#
┤☼┴☼↕!!☼!!¶	/CUU$WTP9CVGTYCNN %QODWUVQT	0QPG	┬┴┤Z!!↕ ☼┴	☼☼☼	#
		5RTC[&T[GT◄((	┬┤¶┴Z!!↕ ☼↑	☼☼☼	#
		5RTC[&T[GT◄52	!!┤┴┤Z!!↕ ☼	☼☼☼	#
		&T[5QTDGPV +PLGEVKQP◄((	!!┤↕┴Z!!↕ ☼	☼☼☼	%
		'52	¶┤!!┤Z!!↕ ☼	☼☼☼	#

6#$. ' ffi┬⌂!┬┼ffiffi%1 0 6+0 7 ' &

5%%0WODGT	’OKUUKOGRQWTEG	%QPVTQNXKEG	#XGTCIGOKUUKOPEVQT KPNDGVQP	’OKUUKOPEVQT4CPIG KPNDGVQP	’OKUUKOPEVQT 4CVKPI
┼⌂┼⌂┼!⌂!┼	/CUU$WTP4QVCT9CVGTYCNN %QODWUVQT	0QPG	┬┼┼Z!↕ ⌂	⌂⌂⌂	#
		5RTC[&T[GT◀(	┬┼¶Z!↕ ⌂	⌂⌂⌂	#
		5RTC[&T[GT◀52	!┼┼┼Z!↕ ⌂	⌂⌂⌂	#
		&T[5QTDGPV +PLGEVKQP◀(	!┼↕┼Z!↕ ⌂	⌂⌂⌂	%
		’52	¶┼!┼Z!↕ ⌂	⌂⌂⌂	#
┼⌂┼⌂┼!⌂!┼	/QFWNCT5VCTXGF⌂#KT	0QPG	↑┼↑←Z!↕	⌂⌂⌂	%
		’52	!┼↕┼Z!↕ ⌂	⌂⌂⌂	&
┼⌂┼⌂┼!⌂!┼	/QFWNCT7EGUU#KT %QODWUVQT	0QPG	┬┼┼Z!↕ ⌂	⌂⌂⌂	#
		5RTC[&T[GT◀(	┬┼¶Z!↕ ⌂	⌂⌂⌂	#
		5RTC[&T[GT◀52	!┼┼┼Z!↕ ⌂	⌂⌂⌂	#
		&T[5QTDGPV +PLGEVKQP◀(	!┼↕┼Z!↕ ⌂	⌂⌂⌂	%
		’52	¶┼!┼Z!↕ ⌂	⌂⌂⌂	#

5QWTEG4GHGTGPEG

C ’OKUUKOPEVQT TJTGGZRTGUUKPNDQHRQNNWVCPVKVVGRGTVQPQHYCUVKPEKPGTCVGFEQPXGTVQMI RGTOGVTKEQP MI◀VQPPGCTWNVKPNDN[↕┼┼

K⌂⌂L OGCPFCVGPQVCXCKNCDNG┼

’52 ’NGEVTQUVCVKGEKRKVCVQT┼
(((CDTKEKNVGT┼

differ from one MWC unit to another, especially where the permit specifications for the accepted waste are different. Because of this variability, the factors shown in Table 4-14 must be used cautiously and may not be representative of other MWCs. Also, emission factor data may be available in databases developed by trade associations or other industry groups.[45]

4.3.3 Source Location

In 1997, there were 120 MWC plants operating in the United States with a total capacity of approximately 111,000 tons/day of MSW. Table 4-15 lists the geographical distribution of MWC units and statewide capacities.[49]

4.4 Sewage Sludge Incinerators

4.4.1 Process Description

The first step in the process of sewage sludge incineration is dewatering the sludge. Sludge is generally dewatered until it is about 15 to 30 percent solids, at which point it will burn without supplemental fuel. After dewatering, the sludge is sent to the incinerator for combustion. The two main types of sewage sludge incinerators (SSIs) currently in use are the multiple-hearth furnace (MHF) and the fluidized-bed combustor (FBC). Over 80 percent of the identified operating SSIs are MHFs and about 15 percent are FBCs. The remaining SSIs co-fire MSW with sludge.[50]

Multiple-Hearth Furnaces

A cross-sectional diagram of a typical MHF is shown in Figure 4-14.[50] The basic MHF is a vertically oriented cylinder. The outer shell is constructed of steel and lined with refractory material and surrounds a series of horizontal refractory hearths. A hollow cast iron rotating shaft runs through the center of the hearths. Cooling air is introduced into the shaft, which extends above the hearths. Attached to the central shaft are the rabble arms, which extend above the

TABLE 4-15. SUMMARY OF GEOGRAPHICAL DISTRIBUTION OF MWC FACILITIES (1997)

5VCVG	0VVODGTffiQH / 9%ffi(CEKSKKVGU	5VCVGffi / 9%ffi%CRCEKV[KPffiVQPUKFC[	2GTEGPVCIGffiQHffi6QVCN 7┤5┤ffi / 9%ffi%CRCEKV[
#NCDCOC	‼	↑←↕	‼
#NCUMC	¶	←↕	‼
#TMCPUCU	‼	┬↕	‼
%CNKHQTPKC	┴	¶♬┤┬↕	¶
%QPPGEVKEVW	↑	↑♬┤┴┤	↑
(NQTKFC	‼┴	‼→♬‼¶↑	‼↑
)GQTIKC	‼	┤↕↕	‼
*CYCKK	‼	‼♬→┤↕	¶
+NKKPQKU	‼	‼♬¶↕↕	‼
+PFKCPC	‼	¶♬┴↑‼	¶
+QYC	┴	¶→¶	‼
/CKPG	┬	¶♬┬↕↕	¶
/CT[NCPF	┴	┬♬┬‼↕	┬
/CUUCEJWUGWU	→	‼¶♬┤¶┴	‼‼
/KEJKICP	┬	¶♬┤¶┤	┤
/KPPGUQVC	‼┤	├♬┴↕	├
/KUUKUUKRRK	‼	‼┤↕	‼
0GYffi*CORUUKTG	¶	├↕↕	‼
0GYffi,GTUG[	↑	↑♬↕←←	↑
0GYffi;QTM	‼↕	‼‼♬‼├┴	‼↕
0QTVJffi%CTQNKPC	‼	→┤↕	‼
1MNCJQOC	‼	‼♬‼¶┤	‼
1TGIQP	‼	┤┤↕	‼
2GPPU[NXCPKC	←	←♬┬←¶	←
6GPPGUUGG	¶	¶♬┤‼↕	¶
6GZCU	┤	¶↑←	‼

TABLE 4-15. CONTINUED

5VCVG	0WVODGTffiQH / 9%ffi(CEKNKVKGU	5VCVGffi / 9%ffi%CRCEKV[KPffiVQPUKFC[	2GTEGPVCIGffiQHffi6QVCN 7┤5┤ffi / 9%ffi%CRCEKV[
7VCJ	‼	┬¶↕	‼
8KTIKPKC	↑	→♬!┴┤	→
9CUJKPIVQP	┤	‼♬↑¶↕	‼
9KUEQPUKP	┴	┤¶↕	‼
616#.	‼¶↕	‼‼↕♬→┤┤	‼↕↕

5QWTEG4GHGTGPEG

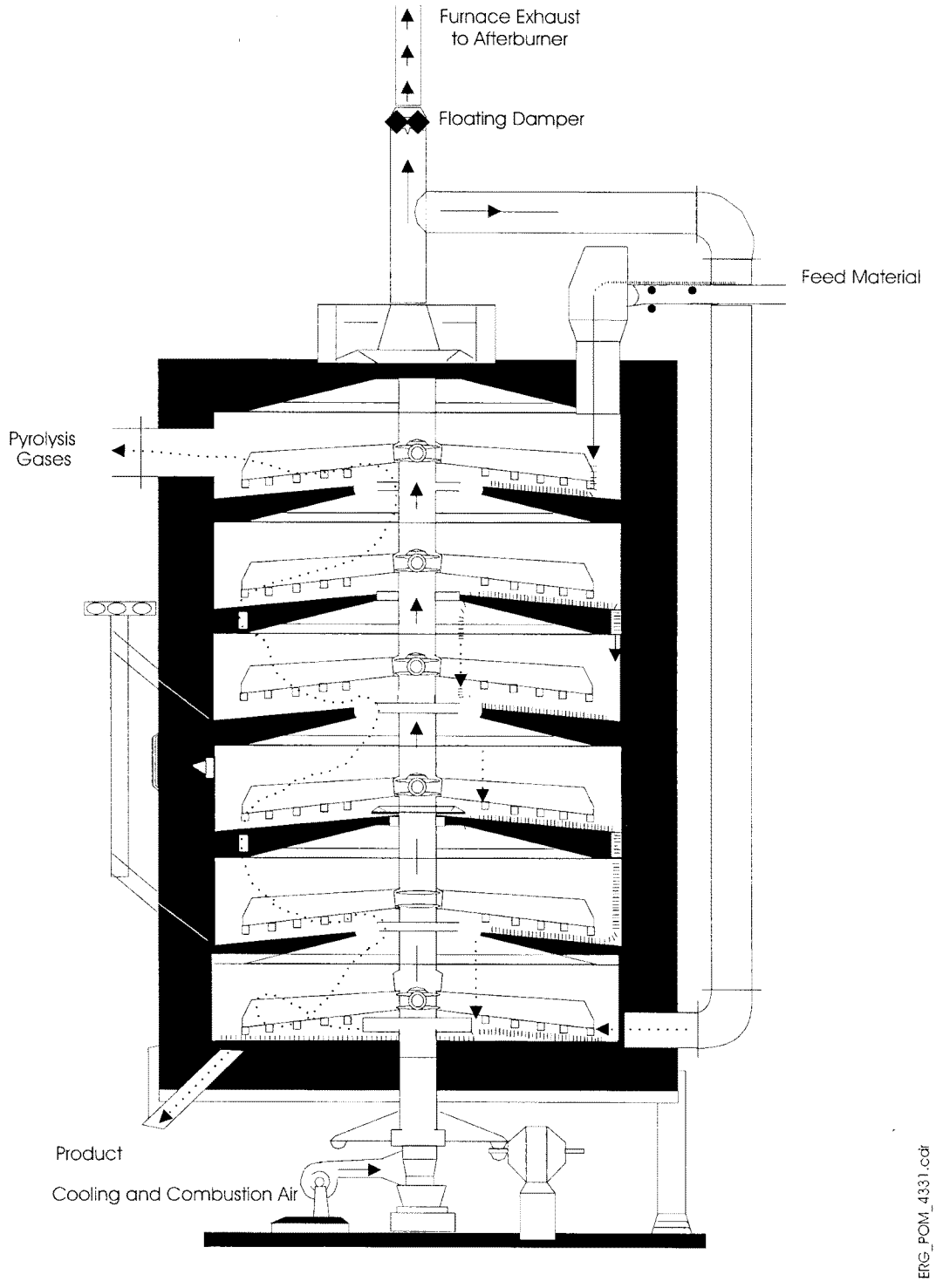

Figure 4-14. Typical Multiple-Hearth Furnace

5QWTEG4GHGTGPEG

hearths. Each rabble arm is equipped with a number of teeth approximately 6 inches in length and spaced about 10 inches apart. The teeth are shaped to rake the sludge in a spiral motion, alternating in direction from the outside in to the inside out between hearths. Burners, which provide auxiliary heat, are located in the sidewalls of the hearths.

In most MHFs, partially dewatered sludge is fed onto the perimeter of the top hearth. The rabble arms move the sludge through the incinerator by raking the sludge toward the center shaft, where it drops through holes located at the center of the hearth. In the next hearth, the sludge is raked in the opposite direction. This process is repeated in all of the subsequent hearths. The effect of the rabble motion is to break up solid material to allow better surface contact with heat and oxygen. A sludge depth of about 1 inch is maintained in each hearth at the design sludge flow rate.

Under normal operating conditions, 50 to 100 percent excess air must be added to an MHF to ensure complete combustion of the sludge. Besides enhancing contact between the fuel and the oxygen in the furnace, these relatively high rates of excess air are necessary to compensate for normal variations in both the organic characteristics of the sludge feed and the rate at which it enters the incinerator. When an inadequate amount of excess air is available, only partial oxidation of the carbon will occur, with a resultant increase in emissions of CO, soot, and hydrocarbons. Too much excess air, on the other hand, can cause increased entrainment of particulate and unnecessarily high auxiliary fuel consumption.[50]

Fluidized-Bed Combustors

Figure 4-15 shows the cross-section diagram of an FBC.[50] FBCs consist of a vertically oriented outer shell constructed of steel and lined with refractory material. Tuyeres (nozzles designed to deliver blasts of air) are located at the base of the furnace within a refractory-lined grid. A bed of sand approximately 2.5 feet thick rests upon the grid. Two general configurations can be distinguished based on how the fluidizing air is injected into the furnace. In the hot

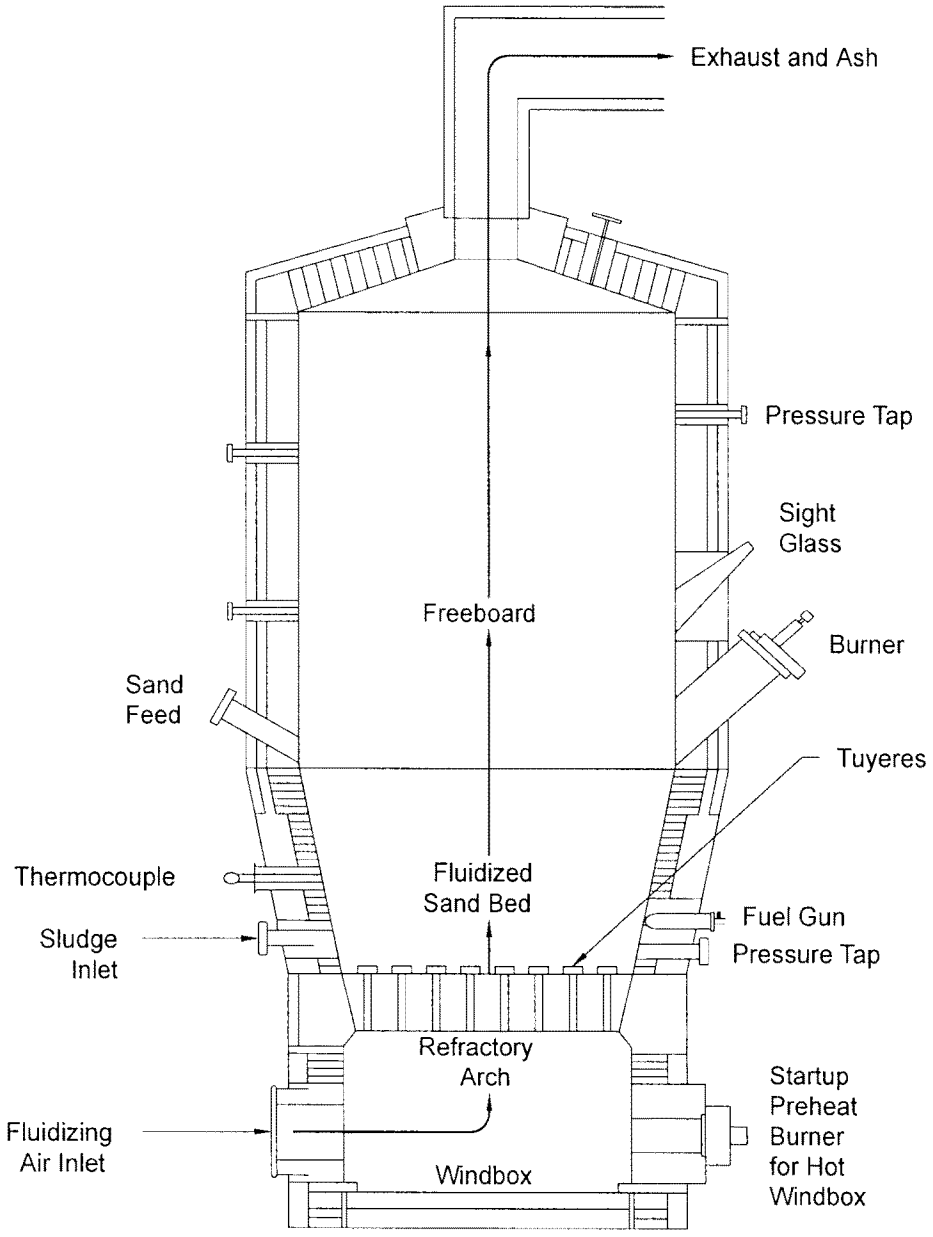

(KMTGffi┬☼!!┤┤ffiffi (NWKFK\GF☼$GFffi%QODWLQT

5QWTEG4GHGTGPEG

┬☼!!

windbox design, the combustion air is first preheated by passing it through a heat exchanger, where heat is recovered from the hot flue gases. Alternatively, ambient air can be injected directly into the furnace from a cold windbox.

Partially dewatered sludge is fed into the lower portion of the furnace. Air injected through the tuyeres at a pressure of 3 to 5 pounds per square inch gauge simultaneously fluidizes the bed of hot sand and the incoming sludge. Temperatures of 1,400 to 1,700(F are maintained in the bed. As the sludge burns, fine ash particles are carried out of the top of the furnace. Some sand is also removed in the air stream and must be replaced at regular intervals.

Combustion of the sludge occurs in two zones. Within the sand bed itself (the first zone), evaporation of the water and pyrolysis of the organic materials occur nearly simultaneously as the temperature of the sludge is rapidly raised. In the freeboard area (the second zone), the remaining free carbon and combustible gases are burned. The second zone functions essentially as an afterburner.

Fluidization achieves nearly ideal mixing between the sludge and the combustion air; the turbulence facilitates the transfer of heat from the hot sand to the sludge. An FBC improves the burning atmosphere, such that a limited amount of excess air is required for complete combustion of the sludge. Typically, FBCs can achieve complete combustion with 20 to 50 percent excess air, about half the excess air required by MHFs. As a consequence, FBCs generally have lower fuel requirements compared to MHFs.[50]

Emission Control Techniques

Certain conditions that affect the emission rates of arsenic in SSIs include:

& Sludge metal content;

& Operating bed temperature;

& Flow patterns leading to solids drop-out ahead of APCD; and

& APCD control efficiency as a function of particle size.

Clearly, the quantity of arsenic in the feed sludge is the basic scalar of emissions. Arsenic in sludge arises from several sources, including industrial discharges (especially plating wastes), corrosion of outtake plumbing materials, street runoff, and numerous lesser domestic and industrial activities. The arsenic content varies from day to day, reflecting a diversity of waste types.

The temperature of the combustion environment influences the behavior of arsenic emissions because of the following sequence of events during incineration:

1. At elevated temperatures, many heavy metal compounds (including arsenic) vaporize. The higher the temperature, the larger the fraction of metals that is vaporized.

2. As temperatures drop, a fraction of the metals condenses. Condensation takes place in proportion to available surface area.

3. Collection of the metals condensed on the PM occurs while passing through the APCD system.[43]

Arsenic emissions may be reduced by using PM control devices and reducing incinerator and APCD temperatures. The types of existing SSI PM controls include low-pressure-drop spray towers, wet cyclones, high-pressure-drop venturi scrubbers, and venturi/impingement tray scrubber combinations. A few ESPs and baghouses are employed, primarily where sludge is co-fired with MSW. The most widely used PM control device applied to an MHF is the impingement tray scrubber. Older units use the tray scrubber alone; combination venturi/impingement tray scrubbers are widely applied to newer MHFs and some FBCs.[50]

4.4.2 Emission Factors

Table 4-16 presents arsenic emission factors for SSIs.[50,51, 52] The factors presented cover the two main incinerator types: MHFs and FBCs. Again, as the emission factor tables for the other types of incinerators (previously discussed) show, PM type control technologies offer the

6#$.'ffi┬☼!↑┼ffiffi#45'0+%ffi'/+55+10ffi(#%6145ffi(14ffi5'9#)'ffi5.7&)'ffi+0%+0'4#614ffi5174%'5

5%%WODGT	’OKUUKQP 5RWTEG	%QPVTQNXKEG	#XGTCIG (CEVQT	’OKUUKQP 4CPIG	’OKUUKQP (CEVQT	4GHGTGPEG
┼☼!☼┼☼↑	5NWFIGPEKPGTCVQT	0QPG	↑┼¶Z!↕	┼¶Z!↕ ☼ ☼ ┼┼↑Z!↕	7	┼!!
┼☼!☼┼☼┼	/WNVKRNG☼*GCTVJ (WTPCEG	0QPG	←┼┼Z!↕	☼☼☼	$	┼↕
		5KPINC%[ENQPG◄8GPVWTK 5ETWDDGT	¶┼↕Z!↕	☼☼☼	’	┼↕
		((	↑┼↕Z!↕	☼☼☼	’	┼↕
		8GPVWTK5ETWDDGT◄+ORKPIGOGPV V[RC9G\5ETWDDGT◄#HVGTDWTPGT	☼┼↕Z!↕	☼☼☼	’	┼↕
		’52	¶┼↕Z!↕	☼☼☼	’	┼↕
		8GPVWTK5ETWDDGT	!┼↕Z!↕	☼☼☼	’	┼↕
		8GPVWTK5ETWDDGT◄9G\2	!┼¶Z!↕	☼☼☼	’	┼↕
		8GPVWTK5ETWDDGT◄+ORKPIGOGPV☼ V[RC9G\5ETWDDGT	!┼¶Z!↕	☼☼☼	$	┼↕
		5KPINC%[ENQPG◄8GPVWTK 5ETWDDGT◄+ORKPIGOGPV5ETWDDGT	!┼↕Z!↕	☼☼☼	’	┼↕
		5KPINC%[ENQPG◄+ORKPIGOGPV 2NCVG5ETWDDGT	┼!↕Z!↕	¶┼↕Z!↕ ☼ ☼ ¶┼↕Z!↕	7	┼!!
		5ETWDDGT	┼↕Z!↕	☼☼☼	7	┼¶

6#$. ' ffi┬☼!!↑┤ffiffi%1 0 6+0 7 ' &

5%%0WODGT	'OKUUKQP5RWTEG	%QPVTQNXKEG	#XGTCIG OKUUKQP (CEVQT KPND◄VQP C	'OKUUKQP4CPIG KPND◄VQP C	'OKUUKQP (CEVQT4CVKPI	4GHGTGPEG
┤☼↑!!☼↑↓┤☼!!↑	(NWKFK\GF$FGF	0QPG	┬┤┬↑Z!!↑	☼☼☼	'	┤↑
		5KPING%[ENQPG◄+ORKPIGOGPV 6TC[5ETWDDGT	!!┤↑↑Z!!↑ ☼	┤┤↑↑Z!!↑ ☼ ☼ ¶┤┬↑Z!!↑ ☼	7	┤ !!
		.QY'PGTI[%[ENQPG◄+ORKPIGOGPV 6TC[V 5ETWDDGT	↑┤→↑Z!!↑ ☼	☼☼☼		┤!!
		8GPVWT5KETWDDGT◄+ORKPIGOGPV 2NCV6ETWDDGT	┤¶┤↑Z!!↑ ☼	☼☼☼	7	┤¶
		8GPVWT5KETWDDGT◄+ORKPIGOGPV V[RG9GV5ETWDDGT	┤☼↑↑Z!!↑ ☼	☼☼☼	'	┤↑
		8GPVWT5KETWDDGT◄ +ORKPIGOGPV☼VQPG 5ETWDDGT◄'52	!!┤↑↑Z!!↑ ☼	☼☼☼	'	┤↑

C 'OKUUKQP HCEVQTUTGGZRTGUUKPNDQHRQNNWVGPVKVVGRGTVQPQHYCUVKGPEKPGTCVGFGEQPXGTVQMI RGTOGVTKVEQP MI◄VQPPG☼OWNVKRN[↑┤┤

K☼☼L OGCPFUCVCPQVCXCKNCDNG┤

'52 'NGEVTQUVC2TKGEKRKVCVQT┤
(((CDTKE[KNVGT┤

greatest efficiency for reducing arsenic emissions. Specifically, the FF and the venturi scrubber with impingement-type wet scrubber are the most effective control devices according to this set of data. Collection efficiencies for the control devices shown in Table 4-16 range from 80 to greater than 99 percent.

4.4.3 Source Location

There are approximately 200 sewage sludge incineration plants operating in the United States.[53] Most SSIs are located in the eastern United States, although there are a significant number on the West Coast. New York has the largest number of facilities with 33; Pennsylvania and Michigan have the next largest number with 21 and 19 sites, respectively.[54]

4.5 Medical Waste Incineration

Medical waste incinerators (MWIs) burn both infectious ("red bag" and pathological) medical wastes and non-infectious general hospital wastes. The primary purposes of MWIs are to (1) render the waste innocuous, (2) reduce the volume and mass of the waste, and (3) provide waste-to-energy conversion.

4.5.1 Process Description

Three main types of incinerators are used as MWIs: controlled-air or starved-air, excess-air, and rotary kiln. The majority (>95 percent) of incinerators are controlled-air units. A small percentage (<2 percent) are excess-air, and less than 1 percent were identified as rotary kiln. The rotary kiln units tend to be larger and typically are equipped with air pollution control devices.[55] Based on EPA's 1995 inventory, twenty-six percent of all MWI's are equipped with air pollution control devices.[56]

Controlled-Air Incinerators

Controlled-air incineration is the most widely used MWI technology, and now dominates the market for new systems at hospitals and similar medical facilities. This technology is also known as two-stage incineration or modular combustion. Figure 4-16 presents a schematic diagram of a typical controlled-air unit.[55]

Combustion of waste in controlled-air incinerators occurs in two stages. In the first stage, waste is fed into the primary, or lower, combustion chamber, which is operated with less than the stoichiometric amount of air required for combustion. Combustion air enters the primary chamber from beneath the incinerator hearth (below the burning bed of waste). This air is called primary or underfire air. In the primary (starved-air) chamber, the low air-to-fuel ratio dries and facilitates volatilization of the waste and most of the residual carbon in the ash burns. At these conditions, combustion gas temperatures are relatively low (1,400 to 1,800(F).[55]

In the second stage, excess air is added to the volatile gases formed in the primary chamber to complete combustion. Secondary chamber temperatures are higher than primary chamber temperatures--typically 1,800 to 2,000(F. Depending upon the heating value and moisture content of the waste, additional heat may be needed. Additional heat can be provided by auxiliary burners located at the entrance to the secondary (upper) chamber to maintain desired temperatures.[55]

Waste feed capacities for controlled-air incinerators range from about 75 to 6,500 lb/hr (at an assumed fuel heating value of 8,500 Btu/lb). Waste feed and ash removal can be manual or automatic, depending on the unit size and options purchased. Throughput capacities for lower-heating-value wastes may be higher because feed capacities are limited by primary chamber heat release rates. Heat release rates for controlled-air incinerators typically range from about 15,000 to 25,000 Btu/hr-ft^3.[55]

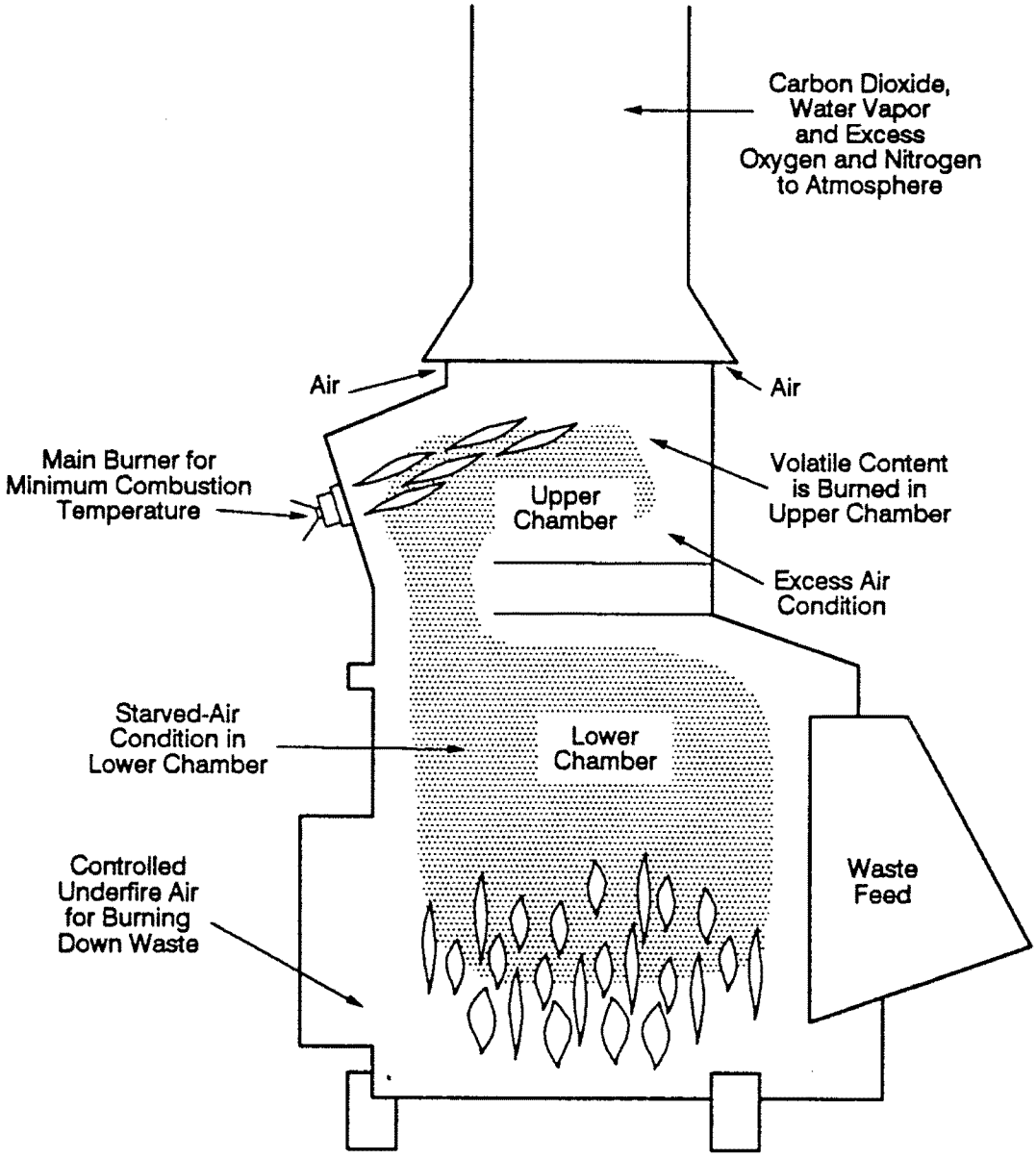

(KMVTGffi┬☼!↑┤ffiffi%QPVTQNGF☼#KTffi+PEKPGTCVQT

5QWTEG4GHGTGPEG

┬☼↑→

Excess-Air Incinerators

Excess-air incinerators are typically small, modular units. They are also referred to as batch incinerators, multiple-chamber incinerators, or "retort" incinerators. Excess-air incinerators are typically a compact cube with a series of internal chambers and baffles. Although they can be operated continuously, they are usually operated in batch mode.[55]

Figure 4-17 presents a schematic for an excess-air unit.[55] Typically, waste is manually fed into the combustion chamber. The charging door is then closed, and an afterburner is ignited to bring the secondary chamber to a target temperature (typically 1,600 to 1,800(F). When the target temperature is reached, the primary chamber burner ignites. The waste is dried, ignited, and combusted by heat provided by the primary chamber burner, as well as by radiant heat from the chamber walls. Moisture and volatile components in the waste are vaporized and pass (along with combustion gases) out of the primary chamber and through a flame port that connects the primary chamber to the secondary or mixing chamber. Secondary air is added through the flame port and is mixed with the volatile components in the secondary chamber. Burners are also installed in the secondary chamber to maintain adequate temperatures for combustion of volatile gases. Gases exiting the secondary chamber are directed to the incinerator stack or to an air pollution control device. After the chamber cools, ash is manually removed from the primary chamber floor and a new charge of waste can be added.[55]

Incinerators designed to burn general hospital waste operate at excess air levels of up to 300 percent. If only pathological wastes are combusted, excess air levels near 100 percent are more common. The lower excess air helps maintain higher chamber temperature when burning high-moisture waste. Waste feed capacities for excess-air incinerators are usually 500 lb/hr or less.[55]

Rotary Kiln Incinerators

Rotary kiln incinerators are also designed with a primary chamber, where the waste is heated and volatilized, and a secondary chamber, where combustion of the volatile fraction is

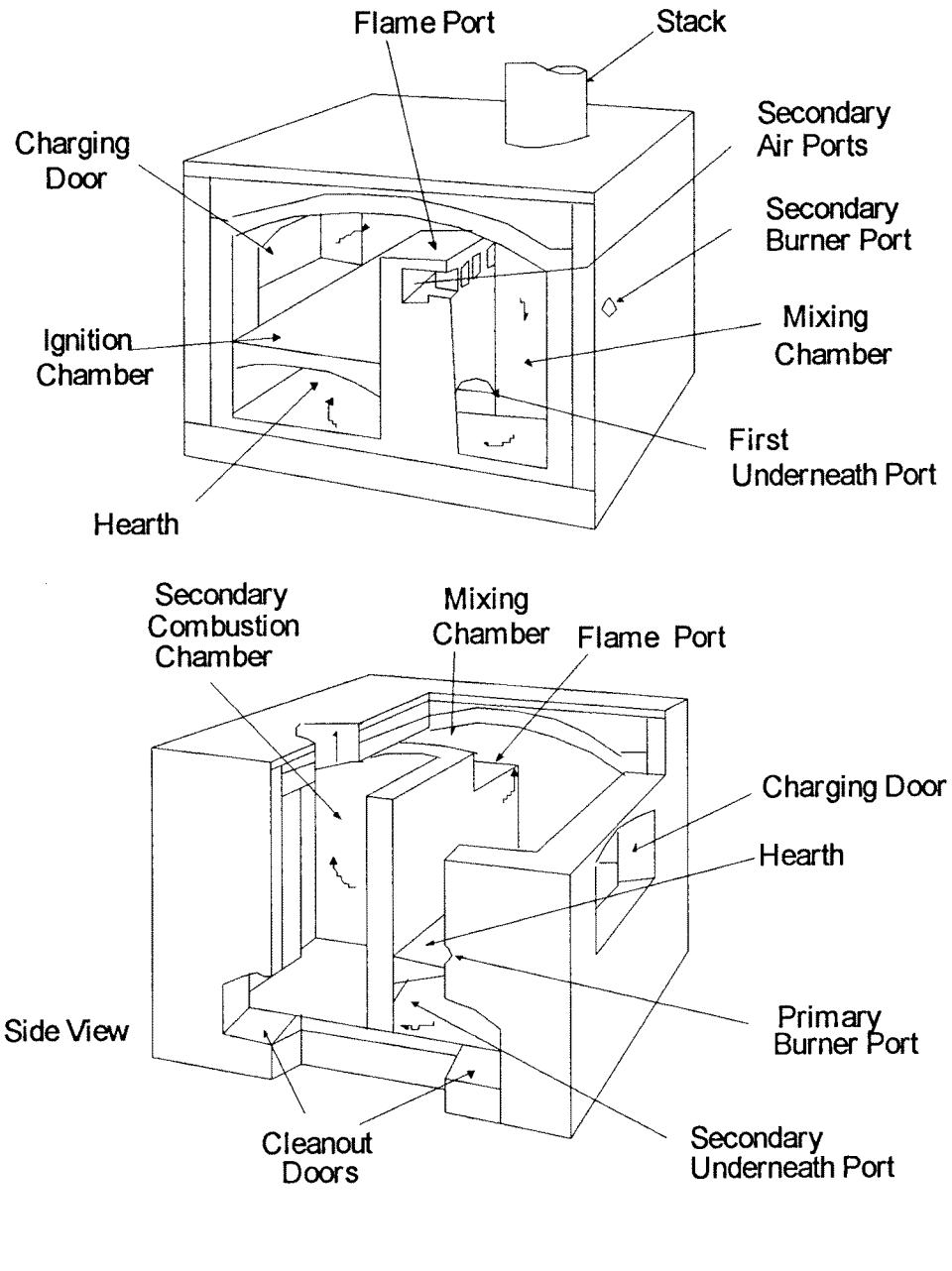

Figure 4-17. Excess-Air Incinerator

5QWTEG4GHGTGPEG

completed. The primary chamber consists of a slightly inclined, rotating kiln in which waste materials migrate from the feed end to the ash discharge end. The waste throughput rate is controlled by adjusting the rate of kiln rotation and the angle of inclination. Combustion air enters the primary chamber through a port. An auxiliary burner generally is used to start combustion and maintain desired combustion temperatures.

Figure 4-18 presents a schematic diagram of a typical rotary kiln incinerator. Volatiles and combustion gases pass from the primary chamber to the secondary chamber. The secondary chamber operates at excess air. Combustion of the volatiles is completed in the secondary chamber. Because of the turbulent motion of the waste in the primary chamber, solids burnout rates and particulate entrainment in the flue gas are higher for rotary kiln incinerators than for other incinerator designs. As a result, rotary kiln incinerators generally have add-on gas-cleaning devices.[55]

Emission Control Techniques

A majority of arsenic and other metal emissions are in the form of PM, and a minority is in vapor form. Particulate emissions of arsenic from the incineration of medical wastes are determined by three major factors:

1. Suspension of noncombustible inorganic materials containing arsenic;
2. Incomplete combustion of combustible arsenic materials; and
3. Condensation of arsenic-based vaporous materials (these materials are mostly inorganic matter).

Emissions of noncombustible materials result from the suspension or entrainment of ash by the combustion air added to the primary chamber of an incinerator. The more air that is added, the more likely that noncombustibles become entrained. Particulate emissions from incomplete combustion of combustible materials result from improper combustion control of the incinerator. Condensation of vaporous materials results from noncombustible substances that

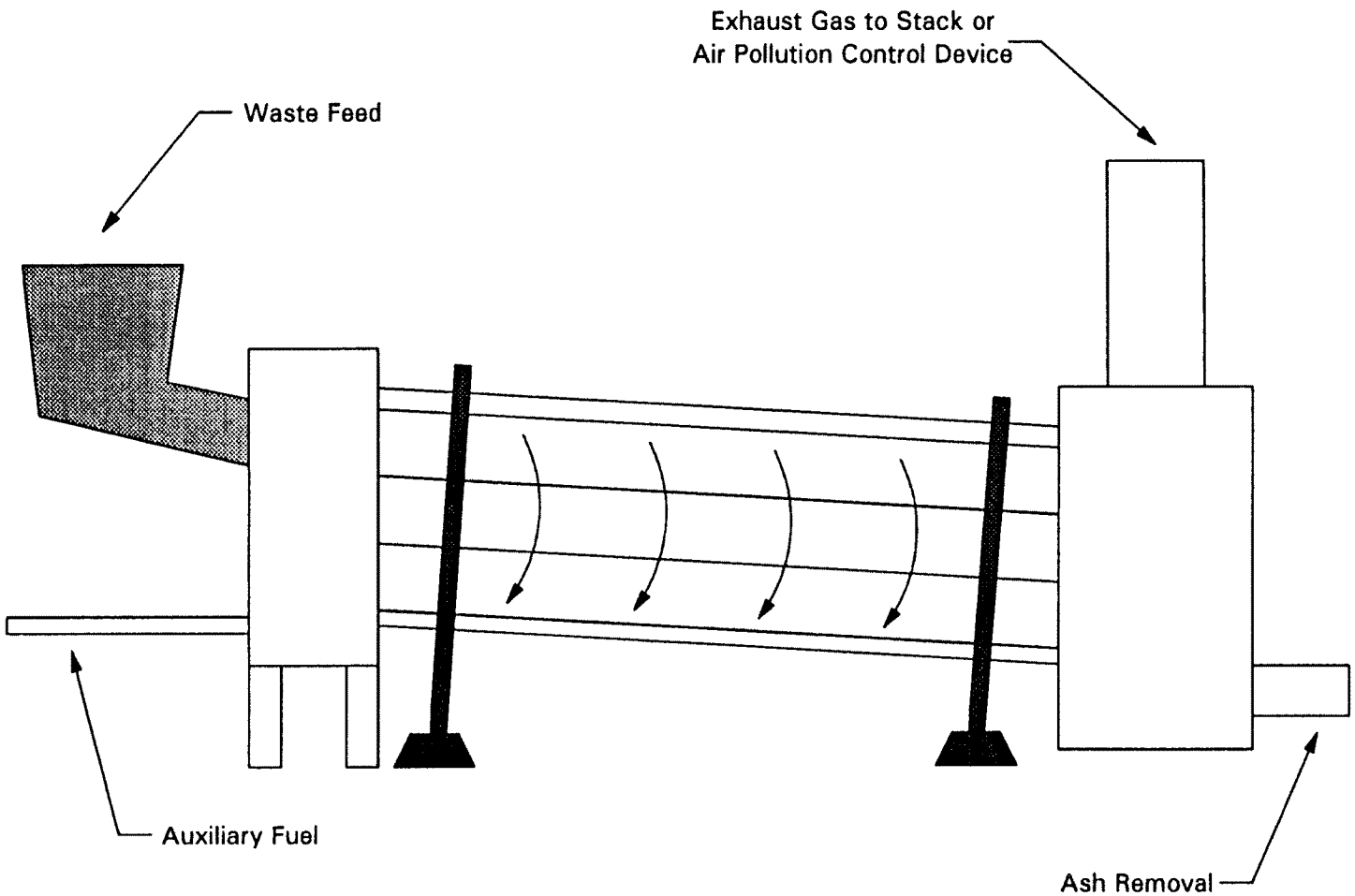

Figure 4-18. Rotary Kiln Incinerator

volatilize at primary combustion chamber temperatures with subsequent cooling in the flue gas. These materials usually condense on the surface of other fine particles.[57]

Typically, two strategies are used to minimize metals emissions: (1) combustion control in the primary chamber so as to reduce vaporization or entrainment of metals, and (2) capture of metals by use of an APCD. Both of these strategies are discussed below. The key APCD parameters used are specific to the device that is used.

Combustion Control--Most MWIs are simple single-chamber units with an afterburner located in the stack. The ability of batch incinerators to control arsenic emissions is limited because only the temperature in the stack is usually monitored.

Most new incinerators are starved-air units. The primary chamber is designed to operate at low temperatures and low gas flow rates. This minimizes the amount of materials entrained or vaporized.

To ensure that arsenic emissions are minimized, operators must maintain the primary chamber at the temperatures and gas flow rates for which it was designed. Usually the only parameter that system operators can directly control is feed rate. High feed rates can lead to high temperatures and high gas velocities. Thus, many operators carefully control the feed rate. The feed rate is reduced when primary temperatures increase. Keeping the temperature low enables the arsenic to condense on different sizes of particles, which are then easily trapped by PM control devices.

APCD Control--When arsenic reaches the APCD, it is present in one of three forms. Non-volatile arsenic is present on large entrained particles. Arsenic that has vaporized and recondensed is usually enriched on fly-ash particles with diameters less than 1 micron. Other arsenic may be present as vapor.[57] The majority of arsenic emissions are in the first two forms and are controlled by PM control devices. Generally, particulate control is a surrogate for arsenic control in an incinerator/air pollution control system.[4]

4.5.2 Emission Factors

The available arsenic emission factors for MWIs are presented in Table 4-17.[55,58,59] Also, emission factor data may be available in databases developed by trade associations or other industry groups.[45] As with the other types of incinerators, waste composition is a critical factor in the amount of arsenic emitted.

The arsenic emission factors were developed from tests at facilities burning red bag waste, pathological waste, and/or general hospital waste. Red bag waste is defined as any waste generated in the diagnosis or immunization of human beings or animals; pathological waste is defined as any human and animal remains, tissues, and cultures; and general hospital waste was defined as a mixture of red bag waste and municipal waste generated by the hospital.

As with other combustion sources, the presented emission factors are highly dependent upon the composition of the waste. For example, the difference in the emission factors presented in Table 4-17 for both a high efficiency and medium efficiency wet scrubber with a fabric filter applied to an MWI is expected to be more a function of the arsenic content of the waste burned rather than scrubber efficiency.

4.5.3 Source Location

There are an estimated 2,400 MWIs in the United States, located at such facilities as hospitals, health care facilities, and commercial waste disposal companies to dispose of hospital waste and medical/infectious waste. Most MWIs are located at hospitals.[4] Of the approximately 7,000 hospitals in the United States, fewer than half have MWIs.[60]

6#$.'ffi┬☼!├ffiffi#45'0+%ffi'/+55+10ffi(#%6145ffi(14ffi/'&+%#.ffi9#56'ffi+0%+0'4#6+10ffi5174%'5

5%% 0WODGT	'OKUUKQP 5RWTEG	%QPVTQN &NXKEG	#XGTCIG (CEVQT	OKUUKQP KPND◄VQP	'OKUUKQP (CEVQT KPND◄VQP	4CPIG	'OKUUKQP (CEVQT 4CVKPI	4GHGTGPEG
┤☼!!☼!┤☼┤	2CVJQNQIKECN◄4QVCT[-KNP	0QPG	┤┤¶Z!!↕	☼☼☼		'	┤┤	
┤☼!!☼!┤☼┤	2CVJQNQIKECN◄ %QPVTQN#KGT	0QPG	¶┤┤¶Z!!↕	☼☼☼		$	┤┤	
┤☼!!☼!┤☼┤	2CVJQNQIKECN	9GV5ETWDDGT KIJ 'HHKEKGPE[	┤┤¶Z!!↕	☼☼☼		'	┤┤	
		9GV5ETWDDGT GFKWO 'HHKEKGPE[◄((	┤┤¶Z!!↕	☼☼☼		'	┤┤	
		((	┤←Z!!↕	☼☼☼		'	┤┤	
		9GV5ETWDDGT QY 'HHKEKGPE[	!!┤┤¶Z!!↕	☼☼☼		'	┤┤	
		&T[5QTDGPV PLGEVKQP◄52	┤┤!!Z!!↕	☼☼☼		'	┤┤	
		&T[5QTDGPV PLGEVKQP◄((	!!┤!←Z!!↕	☼☼☼		'	┤┤	
		&T[5QTDGPV PLGEVKQP◄ %CTDGP PLGEVKQP◄((	!!┤┤Z!!↕	☼☼☼		'	┤┤	
┤☼¶☼!┤☼┤	%QOOGTEKCN +PEKPGTCVK QP 2CVJQNQIKECN◄4QVCT[-KNP	0QPG	┤┤¶Z!!↕	☼☼☼		'	┤┤	
┤☼¶☼!┤☼┤	%QOOGTEKCN +PEKPGTCVK QP 2CVJQNQIKECN◄ %QPVTQN#KGT	0QPG	¶┤┤¶Z!!↕	☼☼☼		$	┤┤	

6#$. ' ffi┬☼! ├ffiffi%1 0 6+0 7 ' &

5%% 0WODGT	’OKUUKOP 5PQWTEG	%QPVTQNXKEG	#XGTCIG (CEVQT	’OKUUKOP KPNDGXQP	’OKUUKOP KPNDGXQP	’OKUUKOP (CEVQT	4GHGTGPEG
┤☼¶☼1┤☼┤	%QOOGTEKCN +PEKPGTCVKQP 2CVJQNQIKECN	0QPG	!!┤↑¶Z!!↕ ☼	├┬¶Z!!↕ ☼ ☼ ¶╟!!↑Z!!↕ ☼	7	┤→♫ ┤←
		((	┴┤←Z!!↕ ☼	☼☼☼	’	┤┤
		9GV5ETWDDGT KIJ ’HHKEKGPE[	┴┤¶Z!!↕ ☼	☼☼☼	’	┤┤
		9GV5ETWDDGT GFKWO ’HHKEKGPE[◀((	┴┤¶Z!!↕ ☼	☼☼☼	’	┤┤
		9GV5ETWDDGT QY ’HHKEKGPE[	!!┤┬¶Z!!↕ ☼	☼☼☼	’	┤┤
		&T[5QTDGPV PLGEVKQP◀52	┤┤↕!!Z!!↕ ☼	☼☼☼	’	┤┤
		&T[5QTDGPV +PLGEVKQP◀%CTDQP +PLGEVKQP◀((	!!┤┬↑Z!!↕ ☼	☼☼☼	’	┤┤
		&T[5QTDGPV PLGEVKQP◀((	!!┤┤←Z!!↕ ☼	☼☼☼	’	┤┤

C ’OKUUKOP PCEVQT TJTGZRTGUUKPNDQHRQNNWVCRVKVVGRGTVQPQHYCUVKGPEKPGTCVGFEQPXGTVQMI RGTOGVTKEEQP MI◀VQPPG☼WNVKRDN[↕┤┤

K☼☼L OGCPFCVGPQVCXCKNCDNG┤

(((CDTKEKNVGT┤
’52 ’NGEVTQUVCVKGEKRKVCVQT┤

4.6 Crematories

4.6.1 Process Description

Crematory incinerators used for human cremation at funeral homes, mortuaries, cemetaries, and crematories are normally of an excess air design. They utilize secondary chamber (afterburner) and primary chamber (ignition) burners fueled by liquified petroleum (LP) gas or natural gas. Burner capacities are generally between 750,000 and 1,500,000 BTUs per hour per burner. Late model units have burner modulation capability to regulate chamber temperatures and conserve fuel. Incineration rates range from 100 to 250 pounds of remains per hour.

Preheating and a minimum secondary chamber temperature, typically ranging from 1,400(F to 1,800(F, may be requirements. Although not suitable for this batch load type of incinerator, the same requirements are occasionally applied to the primary chamber.

The human remains and cremation container, generally made of cardboard or wood, are loaded onto the primary chamber hearth and the primary burner is ignited to begin the cremation process. The remains may be raked at the midpoint of the cremation to uncover unburned material and speed the process. The average cremation takes from 1-1/2 to 3 hours, after which the incinerator is allowed to cool for at least 30 minutes so that the remains can be swept from the hearth.[61]

4.6.2 Emission Factors

Evaluation tests on two propane-fired crematories at a cemetery in California were conducted through a cooperative effort with the Sacramento Metropolitan Air Quality Management District to determine HAP emissions from a crematory.[62] The units were calibrated to operate at a maximum of 1.45 million Btu per hour. Emissions testing was performed over a

two-week period. Thirty-six bodies were cremated during the test period. The body, cardboard, and wood process rates for each test per crematory were reported.

Sampling, recovery, and analysis for arsenic were performed in accordance with CARB Method 436. An emission factor developed from these data is presented in Table 4-18.[62]

4.6.3 Source Locations

In 1991, there were about 400,000 cremations in more than 1,000 crematories located throughout the United States. Table 4-19 lists the number of crematories located in each State and the estimated number of cremations performed in each State.[63]

4.7 Stationary Internal Combustion Sources

4.7.1 Emissions

Air emissions from the flue gas stack are the only emissions from electricity generation, industrial turbines, and reciprocating engines. Internal combustion engines or turbines firing distillate or residual oil may emit trace metals carried over from the metals content of the fuel.

If the fuel analysis is known, the metals content of the fuel should be used for flue gas emission factors, assuming all metals pass through the turbine.[64] The average fuel analysis result can be used to calculate emissions based on fuel usage or stack exhaust flow measurements. Potential emissions based on the trace element content of distillate oils have been calculated and compared with measured stack emissions.[65] In almost all cases, the potential emissions were higher than the measured emissions. An emission factor for distillate oil-fired turbines is presented in Table 4-20.[64]

TABLE 4-18. ARSENIC EMISSION FACTOR FOR CREMATORIES

5%%0WODGT	’OKUUKQP5RWTEG	%QPVTQNXKEG	#XGTCIG OKUUKQPEVQT KPND◀DQF[	’OKUUKQPEVQT4CPIG KPND◀DQF[	’OKUUKQPEVQT4CVKPI
[illegible]	%TGOCVGT5V[CEM	0QPG	[illegible]Z[illegible]	[illegible]Z[illegible] [illegible]Z[illegible]	7

5QWTEG4GHGTGPEG

0QVG #XGTCIGYGKIJVRGTDQF[KPEKPGTCVGDQF[[illegible] ND YTCRRKPINVGTNCQECTFDQCCIPF ND QHYQQF

C ’OKUUKQPHCEVQTCTGKPNDRGTDQF[KPEKPGTCVGDQEQPXGTVQMI RGTDQF[,OWNVKRDN[[

TABLE 4-19. 1991 U.S. CREMATORY LOCATIONS BY STATE

5VCVG	0Q┤QH %TGOCVQT	0Q┤QH %TGOCVKQPU	5VCVG	0Q┤QH %TGOCVQT	0Q┤ffiQHffi %TGOCVKQPU
#NCDCOC	↑	‼♬╩╨	/QPVCPC	‼╢	┴♬╢┴┬
#NCUMC	↑	→↑↕	0GDTCUMC	├	‼♬├‼↕
#TK\QPC	┴‼	‼╩♬¶¶	0GXCFC	‼¶	↑♬╢┬┴
#TMCPUCU	‼╨	¶♬┬┤	0GY*CORUJKTG	↑	¶♬╢┬→
%CNKHQTPKC	‼┬¶	→♬╩┴	0GY,GTUG[	‼↑	‼↑♬╢┤├
%QNQTCFQ	¶╟	←♬╢┴├	0GY/GZKEQ	‼↕	┴♬!┬↕
%QPPGEVKEWV	‼↕	┤♬╢¶→	0GY;QTM	┴→	¶┬♬↑¶╢
&GNCYCTG	┬	‼♬↑¶	0QTV3%CTQNKPC	¶╟	↑♬→→┬
&KUVTKEQH%QNWOD	↕	☼	0QTV&CMQVC	‼	ffiffi☼ffiffi
(NQTKFC	←┼	┤←♬╩╨	1JKQ	┬¶	‼↑♬!↕←
)GQTIKC	‼╢	┬♬╢→↑	1MNCJQOC	‼↕	¶♬!¶↕
*CYCKK	→	┴♬→┴┤	1TGIQP	┴↑	‼‼♬╩╢├¶
+FCJQ	‼╨	¶♬↑┴┤	2GPPU[NXCPKC	┬↑	‼↑♬→↑├
+NNKPQKU	┬┤	‼╢♬╢┤├	4JQFG-UNCPF	┤	¶♬┬┬↑
+PFKCPC	¶╢	┬♬╢┬┴	5QWV%CTQNKPC	‼¶	¶♬┬¶¶
+QYC	‼┬	┴♬↑┬¶	5QWV&CMQVC	┴	ffiffi☼ffiffi
-CPUCU	‼↕	¶♬↑¶┤	6GPPGUUGG	←	¶♬┤‼
-GPVWEM[	↑	‼♬╢┬→	6GZCU	┴←	‼┴♬╢←┤
.QWKUKCPC	┤	¶♬╢↑↑	7VCJ	↑	‼♬╩╢‼↕
/CKPG	┬	┴♬╢↑←	8GTOQPV	┤	‼♬┴↕¶
/CT[NCPF	‼→	↑♬┴↕↕	8KTIKPKC	¶╥	├♬╢┴→
/CUUCEJWUGVVU	‼╨	‼↕♬╥‼‼	9CUJKPIVQP	┬←	‼→♬┬↑↑
/KEJKICP	┬↕	‼├♬╢↑↕	9GUV8KTIKPKC	↑	├↑¶
/KPPGUQVC	¶↕	├♬╩↑	9KUEQPUKP	¶→	├♬╩←┴
/KUUKUUKRRK	┬	↑←┴	9[QOKPI	┴	ffiffi☼ffiffi
/KUUQWTK	¶╟	↑♬!↕┤			

5QWTEG4GHGTGPEG

6#$.'ffi┬☼¶↕┼ffiffi#45'0+%ffi'/+55+10ffi(#%6145ffi(14ffi+06'40#.ffi%1/$756+10ffi'0)+0'5

5%%0WODGT	'OKUUKQP5QWTEG	%QPVTQNXKEG	#XGTCIG ND◄OKUUKQP$CPW	'OKUUKQP ND◄OKUUKQP$CPW	'OKUUKQP (CEVQT4CPIG CEVQT4CVKPI
¶☼!!☼↕!!☼↕!!	&KUVKNNCNKN HKTGF6WTDKPG	0QPG	┼┼↕Z!!↕	☼☼☼	'

5QWTEG4GHGTGPEG

C 'OKUUKQP CEVQT4CTGZRTGUUKPNDQHRQNNWVCPVKVVGRGTOKNNKQPWQHHWGEQODWUVGEQPXGTWQTCOURGTGIC,QWNG◄/,♂♂ ┼OWNVKRD[[↕┼┼

K☼☼L OGCPFUCVCPQVCXCKNCDNG┼

4.7.2 Source Description

Internal combustion sources for electricity generation and industrial application are grouped into two types: gas turbines and reciprocating engines.

Stationary gas turbines are applied in electric power generators, in gas pipeline pump and compressor drives, and various process industries. Gas turbines greater than 3 MW are used in electric generation for continuous, peaking, or standby power. The primary fuels used are natural gas and distillate (No. 2) fuel oil.[64]

Reciprocating internal combustion engines may be classified as spark ignition and compression ignition. Spark ignition engines are fueled by volatile liquids such as gasoline, whereas compression ignition engines use liquid fuels of low volatility, such as kerosene and distillate oil (diesel fuel).[65]

In compression ignition engines, combustion air is compression-heated in the cylinder and diesel fuel oil is then injected into this hot air. Ignition is spontaneous because the air is above the autoignition temperature of the fuel. Spark ignition engines initiate combustion with an electrical discharge. Usually, fuel is mixed with air in a carburetor (for gasoline) or at the intake valve (for natural gas), but fuel can also be injected directly into the cylinder.[66]

The rated power of gasoline and diesel internal combustion engines covers a substantial range: up to 250 hp for gasoline engines and up to and greater than 600 hp for diesel engines. The primary domestic use of large stationary diesel engines (greater than 600 hp) is in oil and gas exploration and production. These engines supply mechanical power to operate drilling (rotary table), mud pumping, and hoisting equipment and may also operate pumps or auxiliary power generators.[67] Stationary natural gas-fired spark ignition engines of over 5,000 hp and natural gas-fired turbines of over 10,000 hp exist.

References for Section 4.0

1. National Research Council. *Particulate Polycyclic Organic Matter*. Washington, D.C.: Committee on Biologic Effects of Atmospheric Pollutants, Division of Medical Sciences, National Academy of Sciences, 1972.

2. National Research Council. *Polycyclic Aromatic Hydrocarbons: Evaluation of Sources and Effects*. Washington, D.C.: Committee on Pyrene and Selected Analogues, Board on Toxicology and Environmental Health Hazards, Commission on Life Sciences, National Academy Press, 1983.

3. Khan, R.M. *Clean Energy from Waste and Coal*. Developed from a symposium sponsored by the Division of Fuel Chemistry of the 202nd National Meeting of the American Chemical Society. New York, New York: August 29-30, 1991.

4. U.S. EPA. *Locating and Estimating Air Toxic Emissions from Medical Waste Incinerators*. EPA-454/R-93-053. Research Triangle Park, North Carolina:

5. U.S. EPA. *Correlation of Coal Properties with Environmental Control Technology Needs for Sulfur and Trace Elements*. Contract No. 68-02-3171. Research Triangle Park, North Carolina: U.S. Environmental Protection Agency, Industrial Environmental Research Laboratory, 1983.

6. U.S. EPA. *Alternative Control Techniques Document - NO_x Emissions from Utility Boilers*. EPA-453/R-94-023. Research Triangle Park, North Carolina: U.S. Environmental Protection Agency, Office of Air Quality Planning and Standards, March 1994.

7. Shih, C.C. et al. *Emissions Assessment of Conventional Stationary Combustion Systems*, Volume III: External Combustion Sources for Electricity Generati on. EPA-600/7-81-003a. Washington, D.C.: U.S. Environmental Protection Agency, Office of Research and Development, November 1980. pp. 455.

8. U.S. EPA. *Compilation of Air Pollutant Emission Factors*, 5th ed. (AP-42), Vol. I: Stationary Point and Area Sources, Section 1.1: Bituminous and Subbituminous Coal Combustion. Research Triangle Park, North Carolina: U.S. Environmental Protection Agency, Office of Air Quality Planning and Standards, 1995.

9. Kelly, M.E. *Sources and Emissions of Polycyclic Organic Matter*. EPA 450/5-83-010b. Research Triangle Park, North Carolina: U.S. Environmental Protection Agency, 1983. pp. 5-9 to 5-44.

10. Mead, R.C., G.W. Brooks, and B.K. Post. *Summary of Trace Emissions from and Recommendations of Risk Assessment Methodologies for Coal and Oil Combustion Sources*. EPA Contract No. 68-02-3889, Work Assignment 41. Research Triangle Park,

North Carolina: U.S. Environmental Protection Agency, Pollutant Assessment Branch, July 1986.

11. U.S. EPA. *Fossil Fuel Fired Industrial Boilers - Background Information*, Volume 1, Chapters 1 to 9. EPA-450/3-82-006a. Research Triangle Park, North Carolina: U.S. Environmental Protection Agency, March 1982.

12. AP-42, 5th ed., *op. cit.*, note 8. Section 1.6: Wood Waste Combustion in Boilers, 1995.

13. U.S. EPA. *Population and Characteristics of Industrial/Commercial Boilers in the United States*. EPA-600/7-79-178a. Research Triangle Park, North Carolina: U.S. Environmental Protection Agency, Industrial Environmental Research Laboratory, August 1979. pp. 6-37.

14. Buonicore, A.J. and W.T. Davis, eds. *Air Pollution Engineering Manual*. New York: Air and Waste Management Association, 1992. pp. 257-260.

15. AP-42, 5th ed., *op. cit.*, note 8. Section 1.11: Waste Oil Combustion, 1995.

16. NRDC. *Burning Used Oil - America's Undiscovered Lead Threat.* National Resources Defense Council, 1991.

17. U.S. Code of Federal Regulations. Title 40, Protection of the Environment, Part 261--Identification and Listing of Hazardous Waste, Subpart A--General, Section 261.6--Requirements for Recylcable Materials. Washington, D.C.: U.S. Government Printing Office, July 1994. p. 43.

18. U.S. Code of Federal Regulations. Title 40, Protection of the Environment, Part 279--Standards for the Management of Used Oil, Subpart A--Applicability, Section 279.11--Used Oil Specifications. Washington, D.C.: U.S. Government Printing Office, July 1994. p. 861.

19. U.S. Code of Federal Regulations. Title 40, Protection of the Environment, Part 279--Standards for the Management of Used Oil, Subpart C--Standards for Used Oil Generators, Section 279.23--On-Site Burning in Space Heaters. Washington, D.C.: U.S. Government Printing Office, July 1994. p. 863.

20. U.S. Code of Federal Regulations. Title 40, Protection of the Environment, Part 279--Standards for the Management of Used Oil, Subpart G--Standards for Used Oil Burners who Burn Off-Specification Used Oil for Energy Recovery. Washington, D.C.: U.S. Government Printing Office, July 1994. pp. 877 to 880.

21. California Air Resources Board. *Results of Source Testing at a Power Production Facility*. Confidential Report No. ERC-83. November 8, 1991.

22. Factor Information Retrieval System Version 3.0 (FIRE 3.0), Record Number 711. Research Triangle Park, North Carolina: U.S. Environmental Protection Agency, September 1994.

23. Factor Information Retrieval System Version 3.0 (FIRE 3.0), Record Number 709. Research Triangle Park, North Carolina: U.S. Environmental Protection Agency, September 1994.

24. Factor Information Retrieval System Version 3.0 (FIRE 3.0), Record Number 1054. Research Triangle Park, North Carolina: U.S. Environmental Protection Agency, September 1994.

25. Factor Information Retrieval System Version 3.0 (FIRE 3.0), Record Number 706. Research Triangle Park, North Carolina: U.S. Environmental Protection Agency, September 1994.

26. Factor Information Retrieval System Version 3.0 (FIRE 3.0), Record Number 714. Research Triangle Park, North Carolina: U.S. Environmental Protection Agency, September 1994.

27. California Air Resources Board. *Determination of AB 2588 emissions from wood-fired boiler exhaust*. Confidential Report No. ERC-63. February 10 - 13, 1992.

28. AP-42, 5th ed., *op. cit.*, note 8. Section 1.2: Anthracite Coal Combustion, 1995.

29. AP-42, 5th ed., *op. cit.*, note 8. Section 1.7: Lignite Combustion, 1995.

30. Factor Information Retrieval System Version 3.0 (FIRE 3.0), Record Number 189. Research Triangle Park, North Carolina: U.S. Environmental Protection Agency, September 1994.

31. Factor Information Retrieval System Version 3.0 (FIRE 3.0), Record Number 215. Research Triangle Park, North Carolina: U.S. Environmental Protection Agency, September 1994.

32. Factor Information Retrieval System Version 3.0 (FIRE 3.0), Record Number 220. Research Triangle Park, North Carolina: U.S. Environmental Protection Agency, September 1994.

33. AP-42, 5th ed., *op. cit.*, note 8. Section 1.3: Fuel Oil Combustion, 1995.

34. Factor Information Retrieval System Version 3.0 (FIRE 3.0), Record Number 705. Research Triangle Park, North Carolina: U.S. Environmental Protection Agency, September 1994.

35. Factor Information Retrieval System Version 3.0 (FIRE 3.0), Record Number 243. Research Triangle Park, North Carolina: U.S. Environmental Protection Agency, September 1994.

36. California Air Resources Board. *Results of Source Testing at a Waste Converter Facility*. Confidential Report No. ERC-118. September 26-28, 1990.

37. U.S. EPA. *Locating and Estimating Air Emissions from Sources of Polycyclic Organic Matter (POM)*. EPA-450/4-84-007p. Research Triangle Park, North Carolina: U.S. Environmental Protection Agency, September 1987.

38. Air & Waste Management Association. *Air Pollution Engineering Manual*, A.J. Buonicore and W. Davis, eds. New York, New York: Van Nostrand Reinhold, 1992.

39. Oppelt, E.T. Incineration of Hazardous Waste - A Critical Review. *Journal of Air Pollution Control Association*. 37(5):558-586, May 1987.

40. Vogel, G., et al (Mitre Corp). *Composition of Hazardous Waste Streams Currently Incinerated*. U.S. Environmental Protection Agency, April 1983.

41. U.S. EPA. *Permit Writer's Guide to Test Burn Data - Hazardous Waste Incineration*. EPA-625/6-86-012. Washington, D.C.: U.S. Environmental Protection Agency, Office of Research and Development, 1986.

42. Whitworth, W.E. and L.E. Waterland. *Pilot-Scale Incineration of PCB-Contaminated Sediments from the Hot Spot of the New Bedford Harbor Superfund Site*. Jefferson, Arkansas: Acurex Corporation, January 1992.

43. Niessen, W.R. and R.C. Porter. Methods for Estimating Trace Metal Emissions from Fluidized Bed Incinerators using Advanced Air Pollution Control Equipment. *Air and Waste*. 8:2-3, 1991.

44. California Air Resources Board. *Results of Source Testing at a Chemical Waste Management Facility*. Confidential Report No. ERC-108. May 25, 1990.

45. Rigo, H.G. Rigo & Associates, Inc. Berea, Ohio. Teleconference with Phil Marsosudiro. Eastern Research Group, Morrisville, North Carolina. March 30, 1998.

46. AP-42, 5th ed., *op. cit.*, note 8. Section 2.1: Refuse Combustion, 1995.

47. Standards of Performance for New Stationary Sources, Municipal Waste Combustors, 54 FR 243 IV(f), December 20, 1989.

48. World Health Organization. *Emissions of Heavy Metal and PAH Compounds from Municipal Solid Waste Incinerators*. Control Technology and Health Effects. Copenhagen, Denmark: World Health Organization, Regional Office for Europe, 1988.

49. Integrated Waste Services Association. *Municipal Waste Combustor Directory 1997-1998*, Washington, D.C. October, 1997.

50. AP-42, 5th ed., *op. cit.*, note 8. Section 2.2: Sewage Sludge Incineration, 1995.

51. Factor Information Retrieval System Version 3.0 (FIRE 3.0), Record Number 234. Research Triangle Park, North Carolina: U.S. Environmental Protection Agency, September 1994.

52. Factor Information Retrieval System Version 3.0 (FIRE 3.0), Record Number 101. Research Triangle Park, North Carolina: U.S. Environmental Protection Agency, September 1994.

53. Factor Information Retrieval System Version 3.0 (FIRE 3.0), Record Number 101. Research Triangle Park, North Carolina: U.S. Environmental Protection Agency, September 1994.

54. U.S. EPA. *Locating and Estimating Air Toxics Emissions from Sewage Sludge Incinerators*. EPA-450/2-90-009. Research Triangle Park, North Carolina: U.S. Environmental Protection Agency, 1990.

55. AP-42, 5th ed., *op. cit.*, note 8. Section 2.3: Medical Waste Incineration, 1995.

56. EPA-450/R-97-007. *Hospital/Medical/Infectious Waste Incineration Emission Guidelines: Summary of the requirements for Section 111(d)/129 State Plans.* U.S. Environmental Protection Agency, Office of Air Quality Planning and Standards, Research Triangle Park, North Carolina. November, 1997.

57. Huffman, G.L. and C.C. Lee. Metal Behavior During Medical Waste Incineration. *ACS Symposium Series Clean Energy from Waste and Coal*, Chapter 15. August 1991. pp. 189-194.

58. Factor Information Retrieval System Version 3.0 (FIRE 3.0), Record Number 167. Research Triangle Park, North Carolina: U.S. Environmental Protection Agency, September 1994.

59. California Air Resources Board. *Results of Source Testing at a Medical Waste Incinerator*. Confidential Report No. ERC-114. August 1991.

60. U.S. Environmental Protection Agency. *Fact Sheet—Air Emission Standards and Guidelines for Hosptal/Medical/Infectious Waste Incinerators*. August 15, 1997.

61. Springer, J.M. (Executive Director, Cremation Association of North America). Personal correspondence to Dennis Beauregard (Emission Factor Inventory Group, U.S. Environmental Protection Agency). January 31, 1996.

62. California Air Resources Board. *Results of Source Testing of a Propane-fired Incinerator at a Crematorium*. Confidential Report No. ERC-39. October 29, 1992.

63. Cremation Association of North America. Cremation Statistics. *Cremationist*. Chicago, Illinois: Cremation Association of North America, 1994.

64. AP-42, 5th ed., *op cit.*, note 8. Section 3.1, Stationary Gas Turbines for Electricity Generation, 1995.

65. U.S. EPA. *Emissions Assessment of Conventional Stationary Combustion Systems*, Vol. II: Internal Combustion Sources. EPA-600/7-79-029c. Research Triangle Park, North Carolina: Industrial Environmental Research Laboratory, U.S. Environmental Protection Agency, February 1979.

66. AP-42, 5th ed., *op cit.*, note 8. Section 3.3, Gasoline and Diesel Industrial Engines, 1995.

67. AP-42, 5th ed., *op cit.*, note 8. Section 3.4, Large Stationary Diesel and All Stationary Dual Fuel Engines, 1995.

SECTION 5.0

EMISSIONS OF ARSENIC AND ARSENIC COMPOUNDS FROM THE METALLURGICAL INDUSTRY

5.1 Primary Lead Smelting

Lead is recovered from a sulfide ore, primarily galena (lead sulfide [PbS]), which also contains small amounts of copper, iron, zinc, and other trace elements. Arsenic typically appears in the form of arsenopyrite (FeAsS) or arsenic sulfide (AS_2S_3) in lead-bearing ore. A description of the process used to manufacture lead and a discussion of the emissions resulting from the various operations are presented below.

A list of primary lead smelters currently in operation within the United States is given in Table 5-1. Primary lead smelters produced 449,800 tons of refined lead in 1990.[1]

5.1.1 Process Description

Figure 5-1 presents a typical process flow diagram for primary lead smelting. The recovery of lead from the lead ore consists of three main steps: sintering, reduction, and refining.[2]

Sintering is carried out in a sintering machine, which is a continuous steel pallet conveyor belt. Each pallet consists of perforated grates, and beneath the grates are wind boxes, which are connected to fans to provide a draft through the moving sinter charge. Depending on the direction of the draft, the sinter machine is characterized as either an updraft or downdraft

TABLE 5-1. DOMESTIC PRIMARY LEAD SMELTERS AND REFINERIES

Smelter	Refinery	1990 Production tons
ASARCO, East Helena, MT	ASARCO, Omaha, NE[a]	72,500
ASARCO, Glover, MO	Same site	123,200
Doe Run (formerly St. Joe), Herculaneum, MO	Same site	254,100

Source: Reference 1.
[a] Scheduled to be closed.

machine. Except for the draft direction, all machines are similar in design, construction, and operation. Capacities range from 1,000 to 2,500 tons per day. Lead concentrates account for 30 to 35 percent of the input material for the sintering process. The balance of the charge consists of fluxes such as limestone and large amounts of recycled sinter or smelter residues.[3]

The blast furnace reduces the lead oxide produced in the sintering machine to elemental lead and removes undesirable impurities as a slag. Reduction reactions to elemental lead occur around 2,900(F. The resulting metal, called bullion, assays 94 to 98 percent lead. The furnace is a rectangular, water-cooled steel shell or shaft atop a refractory lined crucible or hearth. Both sides are equipped with tuyeres through which pressurized combustion or blast air is introduced. Furnace capacities range from 500 to 1,000 tons per day. The charge to the furnace includes sinter, coke, slags from drossing and refining processes, silica, limestone, and baghouse dust. About 80 percent of the charge consists of sinter that may contain from 28 to 50 percent lead. Blast air is introduced through the side-mounted tuyeres resulting in partial combustion of coke and formation of carbon monoxide and providing the heat required to reduce lead oxide to lead bullion. Most of the impurities react with the silica and limestone and form a slag. The slag is skimmed continuously from the furnace and is treated either at the smelter or is shipped elsewhere to recover the metal content. Slags that are high in zinc are generally treated at the smelter in a zinc forming furnace to recover zinc oxide.[3]

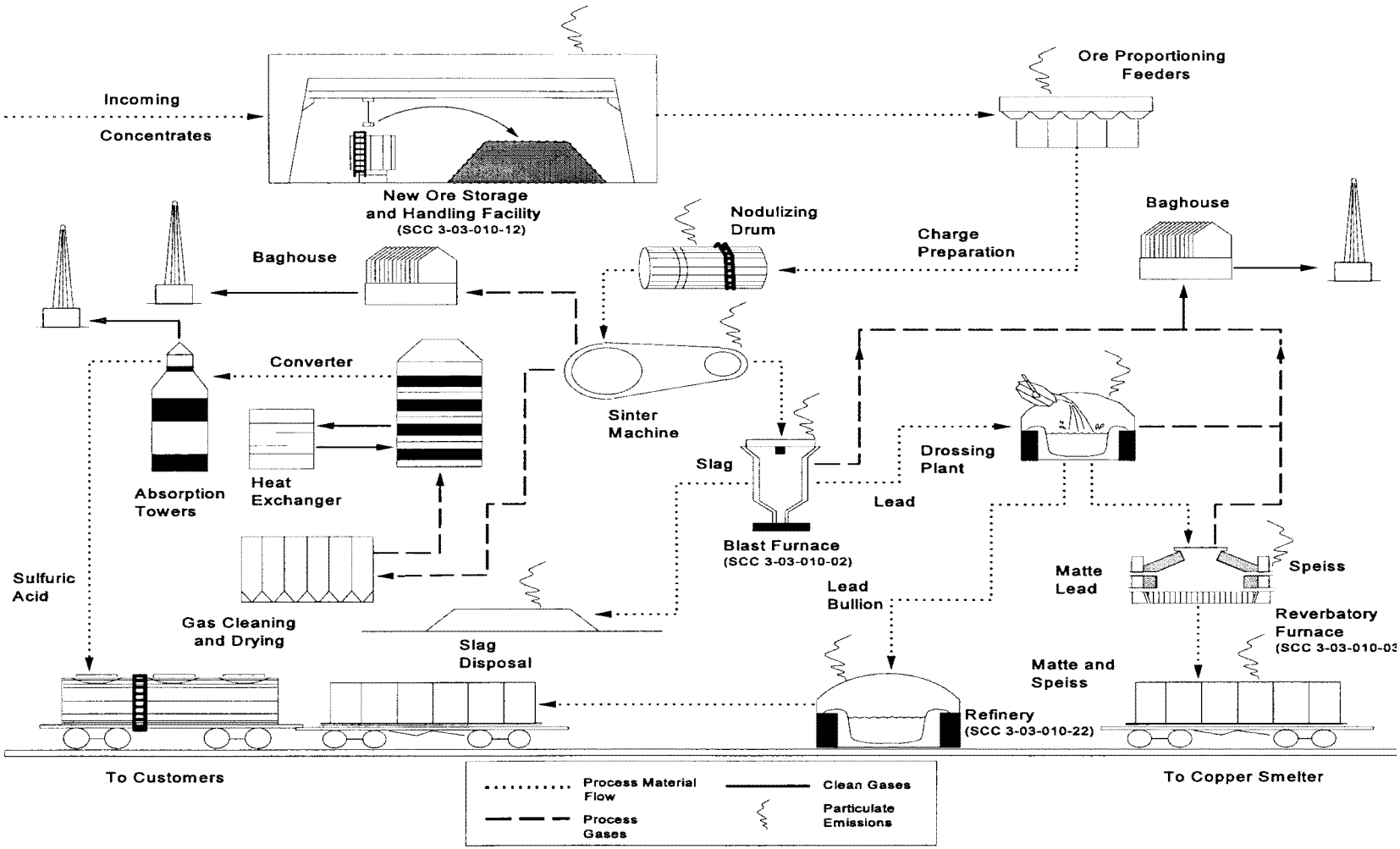

Figure 5-1. Typical Primary Lead-Processing Scheme

Source: Reference 2.

The lead bullion is tapped from the furnace periodically, and is usually treated in a drossing kettle before undergoing final refining. In the kettle, the bullion is cooled and the higher melting impurities, primarily copper, float to the surface and form a dross which is skimmed off and subsequently treated in a reverberatory furnace. The bullion undergoes a final refining in a series of cast iron kettles. The final lead product, typically 99.99 percent or more pure, is then cast into pigs or ingots for shipping.[3]

The function of the dross reverberatory furnace is to separate lead bullion carried over in the dross from other metals of economic value or contaminants in the dross. The dross lead content may be as high as 90 percent. Although much smaller, the reverberatory furnace used is similar in construction to the reverberatory furnace used in copper smelting. Where applied, end-products usually include lead bullion, which is recycled, matte, which is rich in copper and usually sent to a copper smelter for copper recovery, and speiss, which is high in arsenic and antimony.[3]

5.1.2 Emission Control Techniques

Emission controls on primary lead smelter operations are used for controlling particulate matter (PM) and sulfur dioxide (SO_2) emissions resulting from the blast furnace and sintering machines. Centrifugal collectors (cyclones) may be used in conjunction with fabric filters or electrostatic precipitators (ESPs) for PM control. In addition, fugitive emissions from the drossing kettles are typically controlled by building enclosure or kettle hooding systems.[3] There were no arsenic removal efficiency tests available to determine the exact removal efficiencies of the typical control devices used at primary lead smelting facilities. However, it has been estimated by analogy to copper smelting data, that arsenic removal efficiencies greater than 90 percent can be achieved by fabric filter systems and that the "best available" ventilation capture systems used to control fugitive emissions are capable of approximately 90 percent fugitive emission control.[3]

ED_000719_00032208-00136

5.1.3 Emissions

Most of the arsenic entering with the plant feed (>80 percent) can be accounted for in the solid products leaving a facility.[4] Arsenic can potentially be emitted from each unit operation within a primary lead smelting facility. Arsenic removal from the lead-bearing portion of the charge material includes volatilization, slagging, and an association with the matte and speiss phases (mixture of impure metallic arsenides) that are ultimately shipped to copper smelters. Typically, arsenic will be emitted as PM. If any particle size partitioning occurs, it is generally found that arsenic is most likely to be associated with the finer particles.[4]

In addition, for processes where the operating temperature is near the boiling point of arsenic, arsenic fumes may be emitted. For example, arsenic can be volatilized as arsenic trioxide from sinter plants, blast furnaces, dross reverberatory furnaces, zinc fuming furnaces, and reverberatory softening furnaces (lead refining).[4] One study from a Missouri lead smelter determined that approximately 12.9 percent of the arsenic entering a smelter was unaccounted for in the solid waste and product streams. The study concluded that this figure represented the approximate amount that was emitted to the atmosphere.[4] Table 5-2 presents an arsenic emission factor that may be used for estimating arsenic emissions from an entire primary lead smelting operation.[4] The reader is cautioned that this emission factor represents a rough estimate only and the quality of the factor is uncertain.

5.2 Secondary Lead Smelting

5.2.1 Process Description

The secondary lead smelting industry produces elemental lead and lead alloys by reclaiming lead, mainly from scrap automobile batteries. Blast, reverberatory, rotary, and electric furnaces are used for smelting scrap lead and producing secondary lead. Smelting is the

TABLE 5-2. ARSENIC EMISSION FACTOR FOR PRIMARY LEAD SMELTING FACILITIES

SCC	Emission Source	Control Device	Average Emission Factor in lb/ton[a]	Emission Factor Range in lb/ton[a]	Emission Factor Rating
3-03-010	Entire process	Fabric Filter	1.94×10^{-1}	2.80×10^{-2} - 5.80×10^{-1}	U

Source: Reference 4.

[a] Emission factor is expressed in lb of pollutant emitted per ton of lead produced. To convert to kg per metric ton (kg/tonne), multiply by 0.5.

reduction of lead compounds to elemental lead in a high-temperature furnace, which requires higher temperatures (2,200 to 2,300(F) than those required for melting elemental lead (621(F). Secondary lead may be refined to produce soft lead (which is nearly pure lead) or alloyed to produce hard lead. Most of the lead produced by secondary lead smelters is used in the production of lead-acid batteries.[5]

Lead-acid batteries represent about 90 percent of the raw materials at a typical secondary lead smelter, although this percentage may vary from one plant to the next. These batteries contain approximately 18 lb of lead per battery consisting of 40 percent lead alloys and 60 percent lead oxide. Other types of lead-bearing raw materials recycled by secondary lead smelters include drosses (lead-containing byproducts of lead refining), which may be purchased from companies that perform lead alloying or refining but not smelting; battery plant scrap, such as defective grids or paste; and scrap lead, such as old pipes or roof flashing. Other scrap lead sources include cable sheathing, solder, and babbitt-metal.[5]

As illustrated in Figure 5-2, the normal sequence of operations in a secondary lead smelter is scrap receiving, charge preparation, furnace smelting, and lead refining, alloying, and casting.[5] In the majority of plants, scrap batteries are first sawed or broken open to remove the lead alloy plates and lead oxide paste material. The removal of battery covers is typically accomplished using an automatic battery feed conveyor system and a slow-speed saw. Hammer mills or other crushing/shredding devices are then used to break open the battery cases. Float/sink separation systems are typically used to separate plastic battery parts, lead terminals, lead oxide paste, and rubber parts. The majority of lead smelters recover the crushed plastic materials for recycling. Rubber casings are usually landfilled or incinerated in the smelting furnace for their fuel value, and in many cases, lead is reclaimed from the castings.

Paste desulfurization, an optional lead recovery step used by some secondary lead smelters, requires the separation of lead sulfate and lead oxide paste from the lead grid metal, polypropylene plastic cases, separators, and hard rubber battery cases. Paste desulfurization

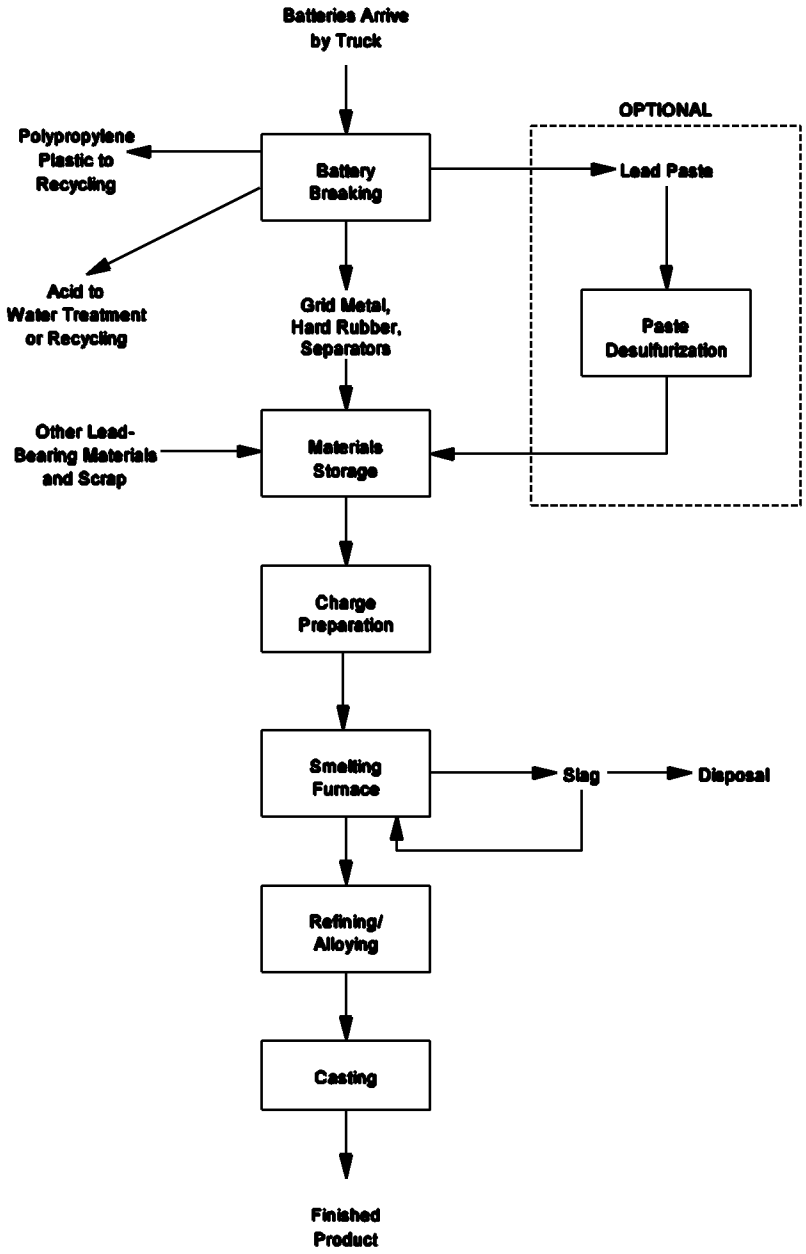

Figure 5-2. Simplified Process Flow Diagram for Secondary Lead Smelting

Source: Reference 5.

involves the chemical removal of sulfur from the lead battery paste. The process improves furnace efficiency by reducing the need for fluxing agents to reduce lead-sulfur compounds to lead metal. The process also reduces SO_2 furnace emissions. However, SO_2 emissions reduction is usually a less important consideration because many plants that perform paste desulfurization are also equipped with SO_2 scrubbers. About one-half of smelters perform paste desulfurization.[5]

After removing the lead components from the batteries, the lead scrap is combined with other charge materials such as refining drosses and flue dust which are charged to a reverberating furnace. Reverberating furnace slag, coke, limestone, sand, and scrap iron are fed to a blast, rotary or electric smelting furnace. Smelting furnaces are used to produce crude lead bullion, which is refined and/or alloyed into final lead products. In 1994 there were approximately 14 reverberatory furnaces, 24 blast furnaces, 5 rotary furnaces, and 1 electric furnace operating in the secondary lead industry in the United States.[5] Blast and reverberatory furnaces are currently the most common types of smelting furnaces used in the industry, although some new plants are using rotary furnaces.

Reverberatory Furnaces

A reverberatory furnace (Figure 5-3) is a rectangular refractory-lined furnace operated on a continuous basis.[5] Natural gas- or fuel oil-fired jets located at one end or at the sides of the furnace are used to heat the furnace and charge material to an operating temperature of about 2,200 to 2,300(F.[5] Oxygen enrichment may be used to decrease the combustion air requirements. Reverberatory furnaces are maintained at negative pressure by an induced draft fan.

Reverberatory furnace charge materials include battery grids and paste, battery plant scrap, rerun reverberatory furnace slag, flue dust, drosses, iron, silica, and coke. A typical charge over one hour may include 9.3 tons of grids and paste to produce 6.2 tons of lead.[5]

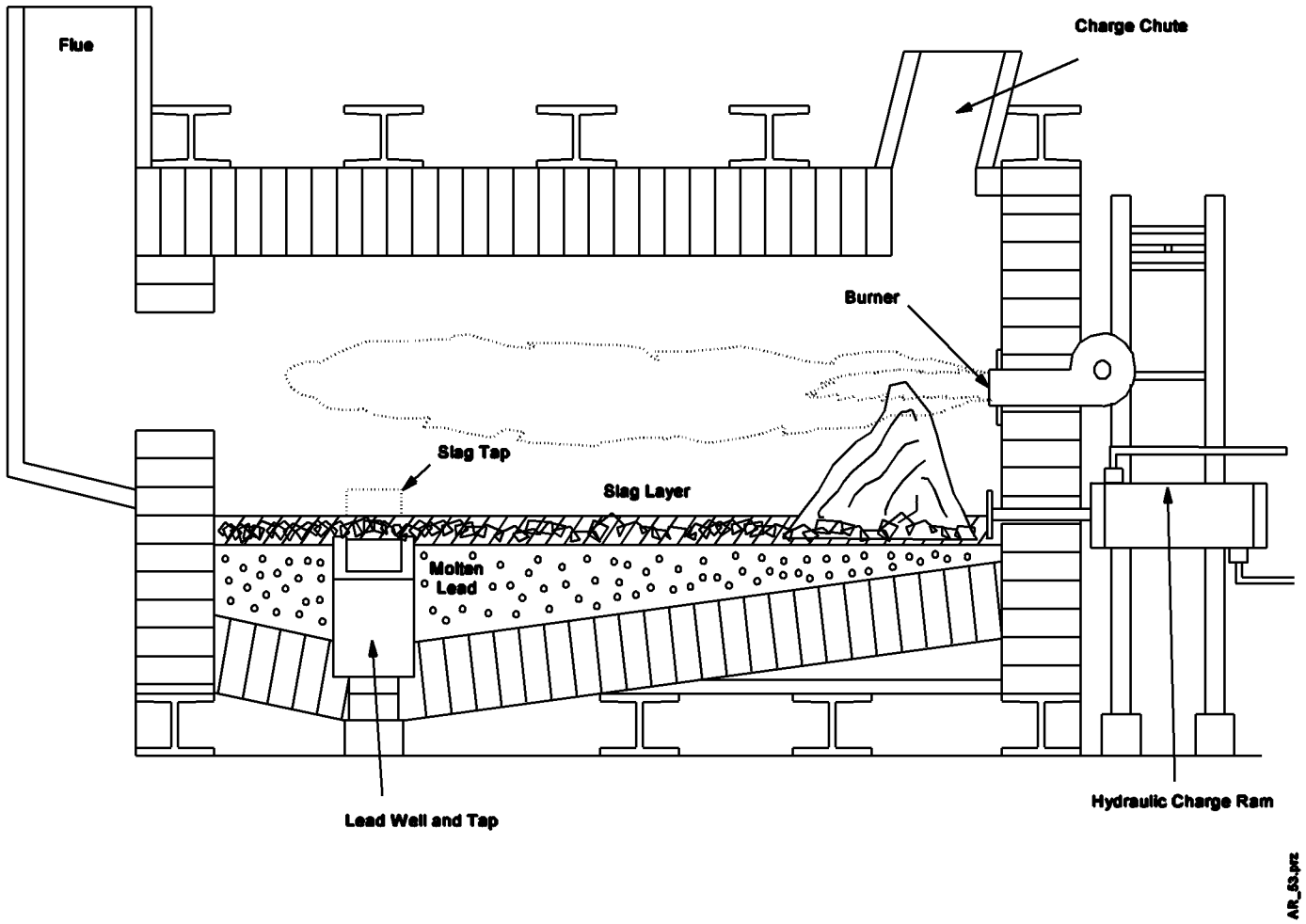

Figure 5-3. Cross-Sectional View of a Typical Stationary Reverberatory Furnace

Source: Reference 5.

Charge materials are often fed to a natural gas- or oil-fired rotary drying kiln, which dries the material before it reaches the furnace. The temperature of the drying kiln is about 400(F, and the drying kiln exhaust is drawn directly into the reverberatory furnace or ventilated to a control device. From the rotary drying kiln, the feed is either dropped into the top of the furnace through a charging chute, or fed into the furnace at fixed intervals with a hydraulic ram. In furnaces that use a feed chute, a hydraulic ram is often used as a stoker to move the material down the furnace.

Reverberatory furnaces are used to produce a soft, nearly pure lead product and a lead-bearing slag. This is done by controlling the reducing conditions in the furnace so that lead components are reduced to metallic lead bullion while the alloying elements (antimony, tin, arsenic) in the battery grids, posts, straps, and connectors are oxidized and removed in the slag. The reduction of $PbSO_4$ and PbO is promoted by the carbon-containing coke added to the charge material:

$$PbSO_4 \square C \vdash Pb \square CO_2 \square SO_2$$

The $PbSO_4$ and PbO also react with the alloying elements to form lead bullion and oxides of the alloying elements, which are removed in the slag.

The molten lead collects in a pool at the lowest part of the hearth. Slag collects in a layer on top of this pool and retards further oxidation of the lead. The slag is made up of molten fluxing agents such as iron, silica, and lime, and typically has significant quantities of lead. Slag is usually tapped continuously and lead is tapped intermittently. The slag is tapped into a mold. The slag tap and mold are hooded and vented to a control device. Reverberatory furnace slag usually has a high lead content (as much as 70 percent by weight) and is used as feed material in a blast or electric furnace to recover the lead. Reverberatory furnace slag may also be rerun through the reverberatory furnace during special slag campaigns before being sent to a blast or electric furnace. Lead may be tapped into a mold or directly into a holding kettle. The lead tap is usually hooded and vented to a control device.[5]

Blast Furnaces

A blast furnace (Figure 5-4) is a vertical furnace that consists of a crucible with a vertical cylinder affixed to the top.[5] The crucible is refractory-lined and the vertical cylinder consists of a steel water-jacket. Oxygen-enriched combustion air is introduced into the furnace through tuyeres located around the base of the cylinder.

Charge materials are pre-weighed to ensure the proper mixture and then are introduced into the top of the cylinder using a skip hoist, a conveyor, or a front-end loader. The charge fills nearly the entire cylinder. Charge material is added periodically to keep the level of the charge at a consistent working height while lead and slag are tapped from the crucible. Coke is added to the charge as the primary fuel, although natural gas jets may be used to start the combustion process. Combustion is self-sustaining as long as there is sufficient coke in the charge material. Combustion occurs in the layer of the charge nearest the tuyeres.

At plants that operate only blast furnaces, the lead-bearing charge materials may include broken battery components, drosses from the refining kettles, agglomerated flue dust, and lead-bearing slag. A typical charge over one hour may include 4.8 tons of grids and paste, 0.3 tons of coke, 0.1 tons of calcium carbonate, 0.07 tons of silica, 0.5 tons of cast iron, and 0.2 tons of rerun blast furnace slag, to produce 3.7 tons of lead. At plants that also have a reverberatory furnace, the charge materials will also include lead-bearing reverberatory furnace slag.[5]

Blast furnaces are designed and operated to produce a hard (high alloy content) lead product by achieving greater furnace reduction conditions than those typically found in a reverberatory furnace. Fluxing agents include iron, soda ash, limestone, and silica (sand). The oxidation of the iron, limestone, and silica promotes the reduction of lead compounds and prevents oxidation of the lead and other metals. The soda ash enhances the reaction of $PbSO_4$ and PbO with carbon from the coke to reduce these compounds to lead metal.

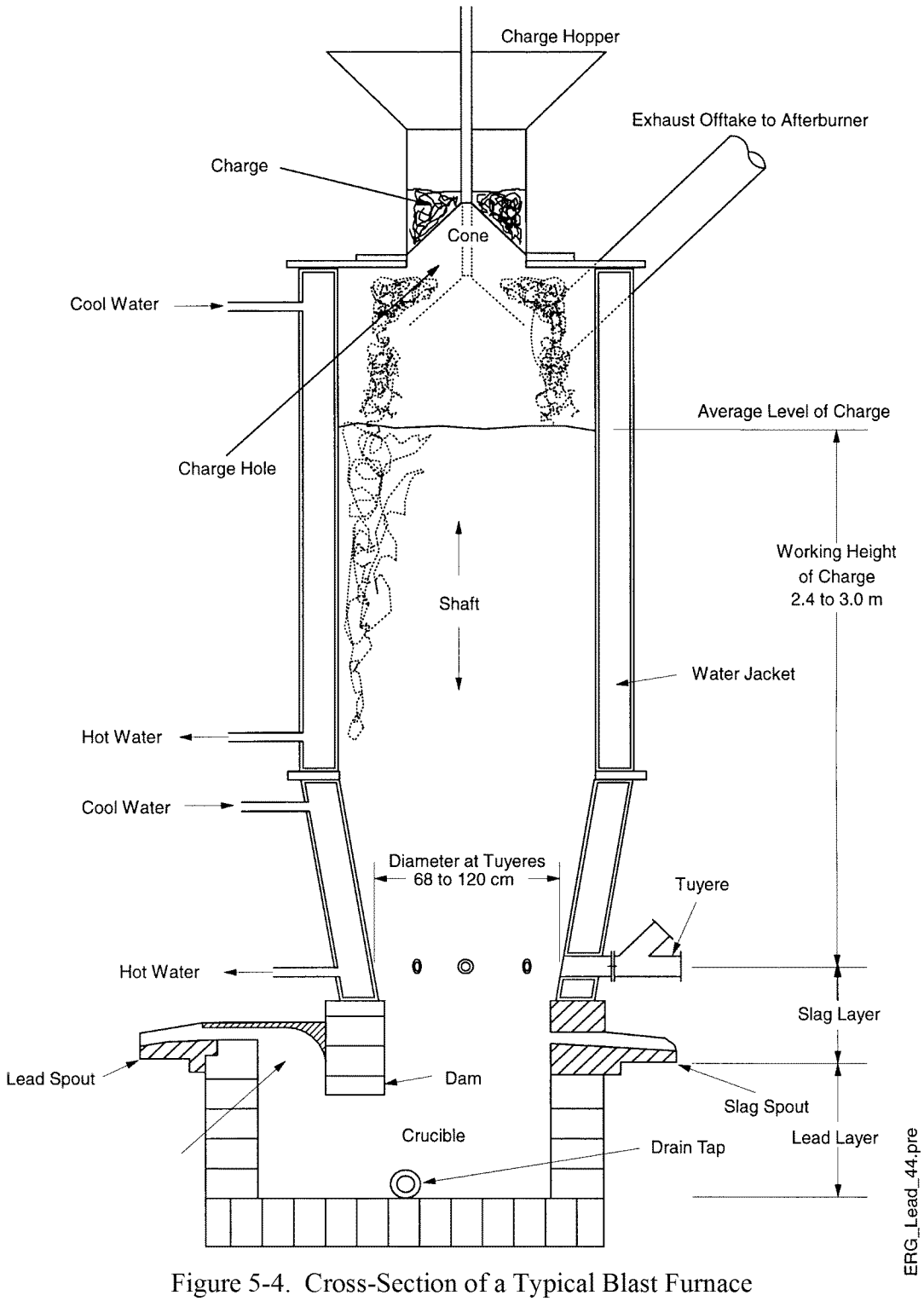

Figure 5-4. Cross-Section of a Typical Blast Furnace

Source: Reference 5.

Lead tapped from a blast furnace has a higher content of alloying metals (up to 25 percent) than lead produced by a reverberatory furnace. In addition, much less of the lead and alloying metals are oxidized and removed in the slag, so the slag has a low metal content (e.g., 1 to 3 percent) and may qualify as a nonhazardous solid waste.

Because air is introduced into the blast furnace at the tuyeres, blast furnaces are operated at positive pressure. The operating temperature at the combustion layer of the charge is between 2,200 and 2,600(F, but the temperature of the gases exiting the top of the charge material is only between 750 and 950(F.

Molten lead collects in the crucible beneath a layer of molten slag. As in a reverberatory furnace, the slag inhibits the further oxidation of the molten metal. Lead is tapped continuously and slag is tapped intermittently, slightly before it reaches the level of the tuyeres. If the tuyeres become blocked with slag, they are manually or automatically "punched" to clear the slag. A sight glass on the tuyeres allows the furnace operator to monitor the slag level and ensure that the tuyeres are clear of slag. At most facilities, the slag tap is temporarily sealed with a clay plug, which is driven out to begin the flow of slag from the tap into a crucible. The slag tap and crucible are enclosed in a hood, which is vented to a control device.

A weir dam and siphon in the furnace are sometimes used to remove the lead from beneath the slag layer. Lead is tapped from a blast furnace into either a crucible or directly to a refining kettle designated as a holding kettle. The lead in the holding kettle is kept molten before being pumped to a refining kettle for refining and alloying. The lead tap on a blast furnace is hooded and vented to a control device.

Rotary Furnaces

As noted above, rotary furnaces (sometimes referred to as rotary reverberatory furnaces) (Figure 5-5) are used at only a few recently constructed secondary lead smelters in the

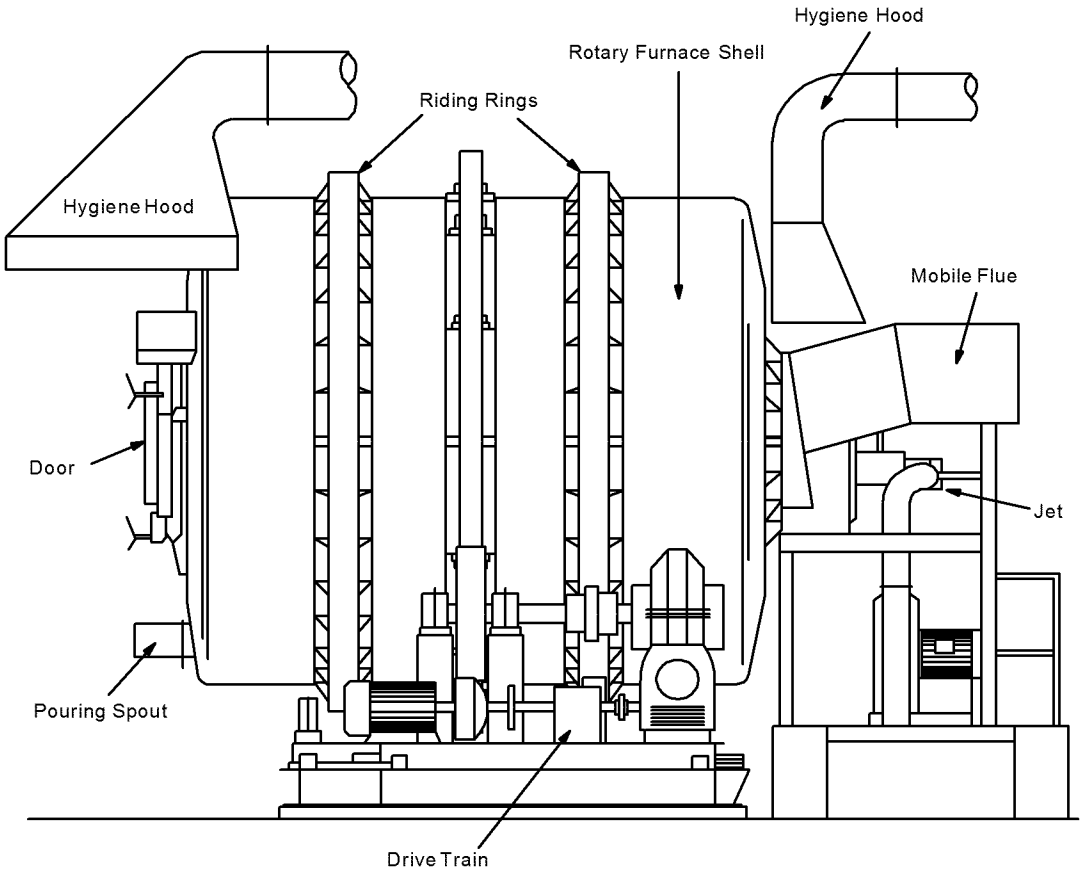

ERG_LEAD_45.pre

Figure 5-5. Side View of a Typical Rotary Reverberatory Furnace

Source: Reference 5.

United States.[5] Rotary furnaces have two advantages over other furnace types: the ease of adjusting the relative amount of fluxing agents (because the furnaces are operated on a batch rather than a continuous basis), and better mixing of the charge materials.

A rotary furnace consists of a refractory-lined steel drum mounted on rollers with a variable-speed motor to rotate the drum. An oxygen-enriched natural gas or fuel oil jet at one end of the furnace heats the charge material and the refractory lining of the drum. The connection to the flue is located at the same end as the jet. A sliding door at the end of the furnace opposite the jet allows charging of material to the furnace. Charge materials are typically placed in the furnace using a retractable conveyor or charge bucket, although other methods are possible.

Lead-bearing raw materials charged to rotary furnaces include broken battery components, flue dust, and drosses. Rotary furnaces can use the same lead-bearing raw materials as blast furnaces. They usually produce slag that is relatively free of lead, less than 2 percent. A rotary furnace can be used instead of a blast furnace.

Fluxing agents for rotary furnaces may include iron, silica, soda ash, limestone, and coke. The fluxing agents are added to promote the conversion of lead compounds to lead metal. Coke is used as a reducing agent rather than as a primary fuel. A typical charge may consist of 12 tons of wet battery scrap, 0.8 tons of soda ash, 0.6 tons of coke, and 0.6 tons of iron, and will yield approximately 9 tons of lead product.[5]

The lead produced by rotary furnaces is a semi-soft lead with an antimony content somewhere between that of lead from reverberatory and blast furnaces. Lead and slag are tapped from the furnace at the conclusion of the smelting cycle. Each batch takes 5 to 12 hours to process, depending on the size of the furnace. Like reverberatory furnaces, rotary furnaces are operated at a slight negative pressure.

Electric Furnaces

An electric furnace consists of a large, steel, kettle-shaped container that is refractory-lined (Figure 5-6).[5] A cathode extends downward into the container and an anode is located in the bottom of the container. Second-run reverberatory furnace slag is charged into the top of the furnace. Lead and slag are tapped from the bottom and side of the furnace, respectively. A fume hood covering the top of the furnace is vented to a control device. In an electric furnace, electric current flows from the cathode to the anode through the scrap charge. The electrical resistance of the charge causes the charge to heat up and become molten. There is no combustion process involved in an electric furnace.

There is only one known electric furnace in operation in the U.S. for the secondary lead industry. It is used to process second-run reverberatory furnace slag, and it fulfills the same role as a blast furnace used in conjunction with a reverberatory furnace. However, the electric furnace has two advantages over a blast furnace. First, because there are no combustion gases, ventilation requirements are much lower than for blast or reverberatory furnaces. Second, the electric furnace is extremely reducing, and produces a glass-like, nearly lead-free slag that is nonhazardous.[5]

Refining, the final step in secondary lead production, consists of removing impurities and adding alloying metals to the molten lead obtained from the smelting furnaces to meet a customer's specifications. Refining kettles are used to purify and alloy molten lead.

5.2.2 Emission Control Techniques

Control devices at secondary smelters are primarily aimed at controlling SO_2 and PM emissions. Control devices used to control furnace operation emissions include baghouses and scrubbers. Typically, baghouses are preceded by an afterburner and cooler when applied on a blast furnace and a cooler alone when used on a reverberatory furnace. Scrubbers installed after

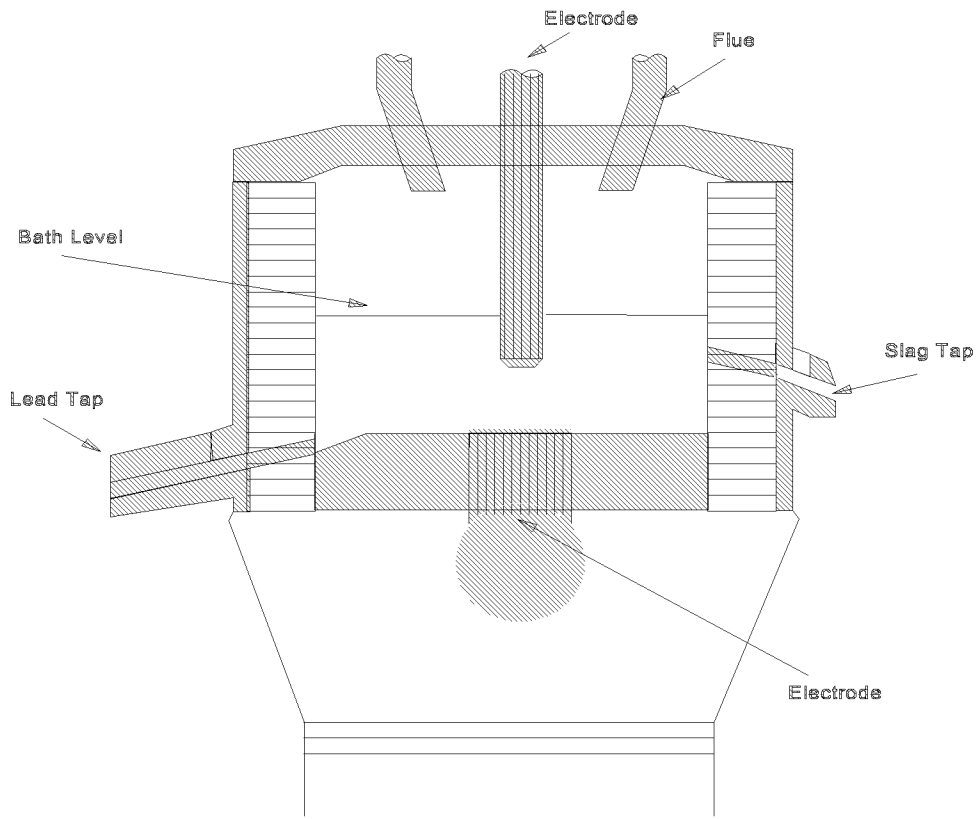

Figure 5-6. Cross-Sectional View of an Electric Furnace for Processing Slag

Source: Reference 5.

ERG_Lead_48.pre

baghouses are primarily aimed at controlling SO_2 emissions. Hooding and ventilation to baghouses are commonly used to control process fugitive emissions. Nonprocess fugitive emissions can be controlled by implementing wetting techniques, as well as enclosure of storage piles.

Certain work practices and personal protection strategies can be implemented to reduce worker arsenic exposure. These include housekeeping, administrative controls, and the use of respirators, gloves, goggles, and aprons.[6]

5.2.3 Emissions

In secondary lead smelting operations, arsenic can be emitted in some degree from each process unit. In addition, there can be fugitive arsenic emissions from both process and nonprocess sources. In general, arsenic emissions vary with the amount of arsenic in the feed material, the operating conditions of the furnace, the amount of chlorides in the feed material, and the slag composition. Arsenic emission factors for secondary lead smelting are presented in Table 5-3.[4,7,8,9]

The primary sources of process emissions are the smelting furnace and the refining kettle. Arsenic is present in several of the furnace feed materials and in all of the furnace products.[4] The amount of arsenic in the feed material may vary greatly. In smelting operations, arsenic-containing materials are subjected to high furnace temperatures and either oxidizing or reducing temperatures. In certain oxidizing environments (e.g., reverberatory furnaces), arsenic trioxide can be formed and subsequently vaporize and leave with the offgases. In addition, arsenic can become complexed in the slag and exit the furnace with this stream.

The three main sources of process fugitive arsenic emissions are the charging operation, the slag tapping operation, and the metal pouring operation. As expected, the magnitude of arsenic emissions would vary with the arsenic content of the charge material. Emissions from

6#$.'ffi┤☼┴┤ffiffi#45'0+%ffi'/+55+10ffi(#%61 45ffi(14ffi5'%10&#4;ffi.'#&ffi5/'.6+0)ffi(#%+.+6+'5

5%%	'OKUUKOPCEVQT 5PQWTEG	%QPVTQNXKEG	#XGTCIGOKUUKQP (CEVQTKPNDVQP	'OKUUKQPCEVQT 4CPIGKPNDVQP	'OKUUKQPCEVQT 4CVKPI	4GHGTGPEG
┤☼┬☼┤┤	5OGNVKPWTPCEG	(CDTKEKNVGT	↑┤☼Z!!↕	☼	7	├
┤☼┬☼┤┬	$NCUUWTPCEG #HVGTDWTPGTGTVNGV♂	#HVGTDWTPGT	!┤Z!!↕ ☼	!┤!Z!!↕ ☼ ☼ !┤-Z!!↕☼	7	→
┤☼┬☼┤┬	#TGCOKUUKOPVGTKCN 5VQTCIGPF*CPFNKPI	7PEQPVTQNNGF	!┤¶Z!!↕☼	☼	7	┬
┤☼┬☼┤┬	(WIKVKXGUWTPCEG %JCTIKPCPF6CRRKP♂	(CDTKEKNVGT	┤┤↑Z☼	☼	7	┬
┤☼┬☼┤┬	$NCUUCPF4GXGTDGTCVOQTDTKEKNVGT◀9GV (WTPCEGU 5ETWDDGT	(CDTKEKNVGT	¶┤-Z!!↕ ☼	☼	7	├
┤☼┬☼┤┬☼┴	$NCUUWTPCEG	#HVGTDWTPGT◀%[ENKGPGU (CDTKEKNVGT	☼ ND◀VQP	☼	7	←
┤☼┬☼┤┬☼┴┬	$NCUUWTPCEGCPF-GVVNG #HVGTDWTPGT◀(CDTKE!Z!!↕ ☼ 4GHKPKPI (KNVGT◀8GPVWTK 5ETWDDGT◀&GOKUVGT		ND◀VQP	☼	7	←

C 'OKUUKOPCEVQTLTGGZRTGUUKPNDQHRQNNWVCPOKVVGRTVQPHNGCRTQFWEGFQEQPXGTVQMI RGTDGVTKEQP MI◀VQPPGCPWNVKRDN[↕┤┤

┤☼┴┤

the charging operation include fine particulates and fumes, originating from recycled flue dusts which can contain significant amounts of arsenic. The slag and metal tapping operations incorporate high temperatures and therefore generate a considerable amount of fumes. Those fumes that are not captured and controlled represent process fugitive emissions.

Fugitive nonprocess arsenic emissions will be affected by the arsenic content of the various fine materials being stored at the smelter including the non-agglomerated flue dusts and the dried battery mud. The flue dust storage pile in the charge preparation area is the primary source of nonprocess fugitive arsenic emissions at a secondary lead smelting facility.[4] In addition, battery breaking yards, battery storage areas, slag storage areas, and smelter access roads have all been identified as potential sources of nonprocess fugitive arsenic emissions. Meteorological factors (in particular the amount of wind and rain) and the amount of activity around the plant site can influence the total amount of arsenic from this source.[4]

5.2.4 Source Locations

In 1990, primary and secondary smelters in the United States produced 1,380,000 tons of lead. Secondary lead smelters produced 946,000 tons or about 69 percent of the total refined lead produced in 1990.[5] Table 5-4 lists U.S. secondary lead smelters according to their annual lead production capacity.[5]

5.3 Primary Copper Production

5.3.1 Source Description

Seven primary copper smelters were operating in the United States in 1995 and one more was closed for modifications. The combined production capacity in 1995 for the seven plants in operation was 1,728,043 tons.[10]

TABLE 5-4. U.S. SECONDARY LEAD SMELTERS GROUPED ACCORDING TO ANNUAL LEAD PRODUCTION CAPACITY

Smelter	Location
Small-Capacity Group:[a]	
Delatte Metals[b]	Ponchatoula, LA
General Smelting and Refining Company	College Grove, TN
Master Metals, Inc.[b]	Cleveland, OH
Metals Control of Kansas[b]	Hillsboro, KS
Metals Control of Oklahoma[b]	Muskogee, OK
Medium-Capacity Group:[c]	
Doe Run Company	Boss, MO
East Penn Manufacturing Company	Lyon Station, PA
Exide Corporation	Muncie, IN Reading, PA
GNB, Inc.	Columbus, GA Frisco, TX
Gulf Coast Recycling, Inc.	Tampa, FL
Refined Metals Corporation[b]	Beech Grove, IN Memphis, TN
RSR Corporation	City of Industry, CA Middletown, NY
Schuylkill Metals Corporation	Forest City, MO
Texas Resources, Inc.[b]	Terrell, TX
Large-Capacity Group:[d]	
Gopher Smelting and Refining, Inc.	Eagan, MN
GNB, Inc.	Vernon, CA
RSR Corporation	Indianapolis, IN
Sanders Lead Company	Troy, AL
Schuylkill Metals Corporation	Baton Rouge, LA

Source: Reference 5.

[a] Less than 22,000 tons.
[b] These facilities were not operating as of January 1995.
[c] 22,000 to 82,000 tons.
[d] Greater than 82,000 tons.

5.3.2 Process Description

The pyrometallurgical process used to extract copper from sulfide ore concentrates ("concentrates") is based upon copper's strong affinity for sulfur and its weak affinity for oxygen as compared to that of iron and other base metals in the ore. The purpose of smelting is to separate the copper from the iron, sulfur, and commercially worthless mineral materials generally referred to as "gangue." All of the primary copper smelters currently produce anode copper from sulfur-bearing ores with the same basic processes:[10]

- matte smelting (i.e., smelting of concentrates to produce matte);
- matte converting (to produce blister copper); and
- refining of blister copper in an anode furnace (to produce anodes).

Copper concentrates are received by the smelter that typically contain 24 to 30 percent copper, 30 percent sulfur, 25 percent iron, and 10 to 20 percent oxides of silicon, calcium, aluminum, magnesium, and zinc (usually present as sulfide). (Copper-bearing ores typically contain 0.5 to 1 percent copper by weight. A froth-flotation process is utilized to produce the "concentrate." This froth-flotation process may or may not be performed at the smelter site.) Concentrates also contain impurities, such as lead, arsenic, antimony, cadmium, chromium, cobalt, manganese, mercury, nickel, and selenium. These impurities are typically found in combined concentrations of less than one percent. The smelter may also receive copper scrap (for direct input into the converters), or may receive other non-concentrate inputs, such as precipitates, or copper "speiss."

Incoming concentrates are typically dried before charging into a smelting furnace or reactor. Several types of smelting furnaces/reactors are currently utilized in the United States, including flash furnaces, CONTOP reactors, and IsaSmelt reactors. Figure 5-7 illustrates basic smelting operations.[10]

ED_000719_00032208-00155

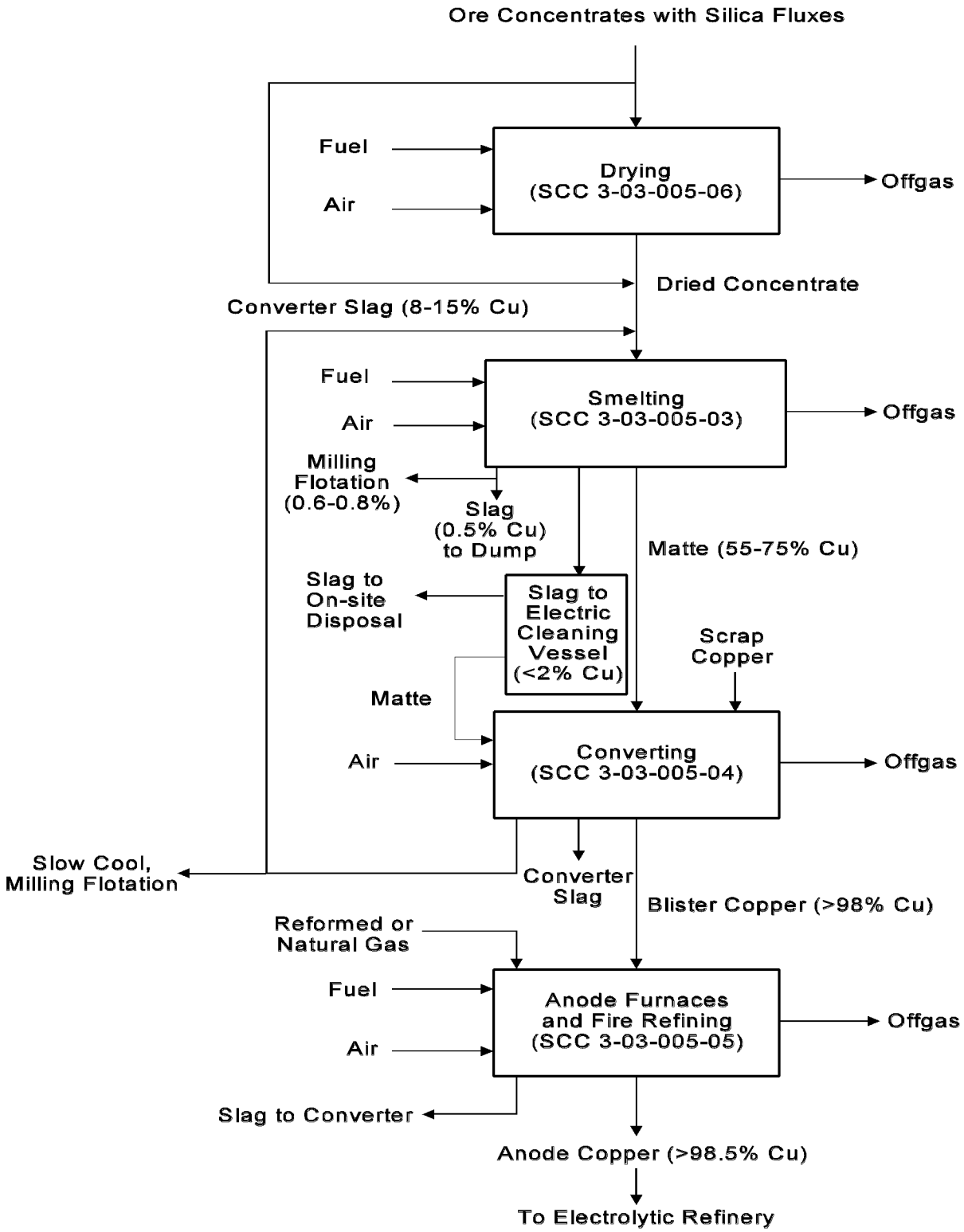

Figure 5-7. Typical Primary Copper Smelter Flow Sheet

Source: References 10 and 11.

The smelting furnace/reactor produces molten copper matte, typically containing 55-75 percent copper, which is tapped from the furnace, and transferred by ladles to converters. The smelting furnace/reactors also produces slag, containing relatively low amounts of copper (typically less than two percent). This slag may be discarded directly, if less than 1 percent copper, or may be transferred to an electric slag cleaning vessel (for further copper removal), or may be cooled and reconcentrated (again, in an attempt for further copper removal).

In the converters, further sulfur is removed from the matte, and in addition, iron is oxidized and separated by skimming. The output from the converters is "blister" copper, generally containing greater than 98 percent copper. Figure 5-8 illustrates a typical converter.[12]

Molten blister copper is poured from the converter, and transferred by ladles to anode furnaces, where further refining by removal of oxygen and other impurities takes place. The resulting "anode" copper is generally greater than 98.5 percent pure. It is cast into anodes for use in the final electrolytic refining step.

Further refining of "anode" copper into "cathode" copper (greater than 99.9 percent purity) is performed by electrolytic means in a "tank house." Production of cathode copper may or may not take place at the smelter site.

5.3.3 Emissions

PM and SO_2 are the principal air contaminants emitted from primary copper smelters. Actual emissions from a particular smelter will depend upon the smelting configuration (type and mix of equipment used), control devices applied, and the operating and maintenance practices employed. Typically, arsenic will be emitted as PM. In addition, actual arsenic emissions will vary depending on the quantity of arsenic introduced to the smelter as copper-bearing feed materials. Table 5-5 presents arsenic emission factors available from one EPA report.[13] In

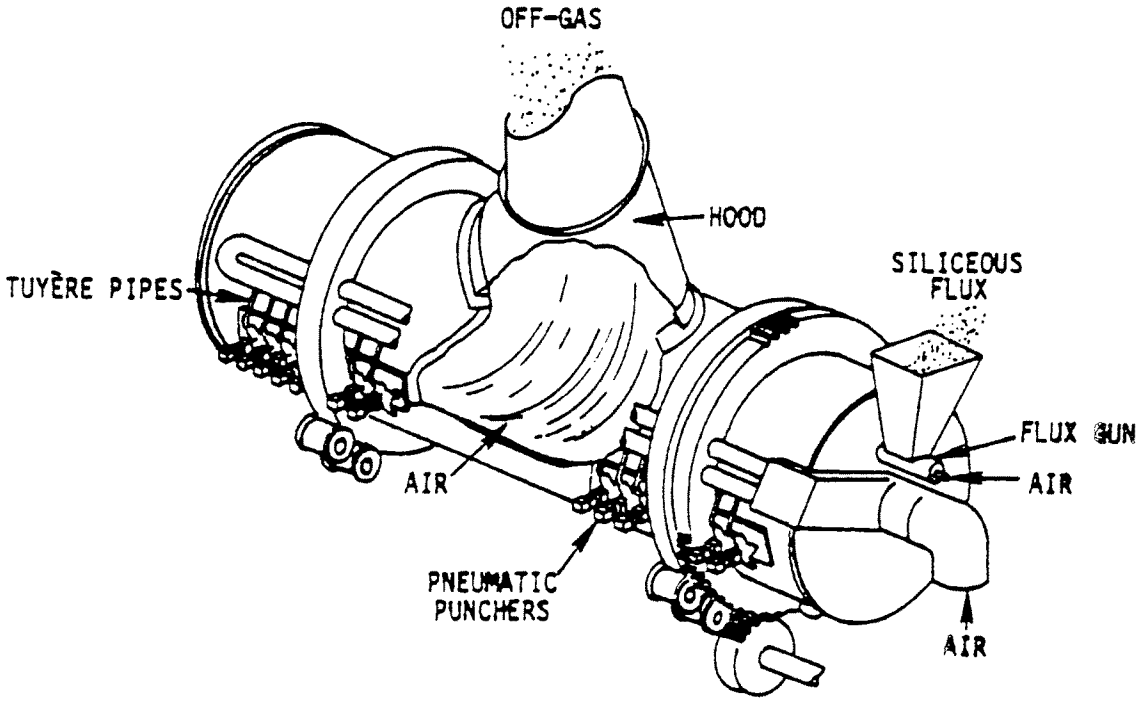

Figure 5-8. Copper Converter

Source: Reference 12.

6#$.'ffi┤☼├ffiffi#45'0+%ffi'/+55+10ffi(#%61 45ffi(14ffi24+/#4;ffi%122'4ffi5/'.6+0)ffi(#%+.+6+'5

5%%	’OKUUKOPU	%QPVTQNXKEG	#XGTCIGKPNDÀVQP	’OKUUKOPU KPNDÀVQP	4CPIGOKUUKOPU 4CVKPI
☼☼☼☼☼☼	#HVGTWNVKRNGCTV4QCUVGT♫ 4GXGTDGTCVQWTPCEGNWKFK\GF $GF4QCUVGTNGEVTKEVTPCEG	0QPG	☼☼☼	┼┼┤ ☼ ↑┤→	7
☼☼☼☼☼☼	%QPXGTVGTÀWIKVKXGOKUUKOPU	0QPG	☼☼☼	┴┤¶Z!↕ ☼ !┤┴Z!↕	7
☼☼☼☼☼☼	4GXGTDGTCVQWTPCEGWIKVKXG ’OKUUKOPU	0QPG	☼☼☼	├¶↕Z!↕ ☼ !┤¶↕Z!↕	7
☼☼☼☼☼←	(NWKFK\GF4QCUVGT	0QPG	☼☼☼	!┤←↕Z!↕ ☼ ┴!↕Z!↕	7
☼☼☼☼☼¶	/WNVKRNGCTV4QCUVGT	0QPG	☼☼☼	¶┤←↕Z!↕ ☼ ┼↕Z!↕	7
☼☼☼☼☼┴	4GXGTDGTCVQWTPCEGNVGTCHVG 4QCUVGT♂	0QPG	☼☼☼	!┤→↕ ☼ ←┼┤	7
☼☼☼☼☼┬	%QPXGTVGTNNEQPHKIWTCVKQPU♂	0QPG	☼☼☼	¶┤↕Z!↕ ☼!┤↕Z!↕	7
☼☼☼☼☼┴	4GXGTDGTCVQWTPCEGNVGTCHVG TQCUVGT♂	’52	☼☼☼	→↕Z!↕ ☼ ¶┤↕Z!↕	7
☼☼☼☼☼┬	%QPXGTVGTNNEQPHKIWTCVKQPU♂	’52	☼☼☼	¶┤↕Z!↕ ☼┤↕Z!↕	7
		$CIJQWUG	☼☼☼	├↕Z!↕ ☼ !┤↕Z!↕	7
☼☼☼☼☼←	(NWKFK\GF4QCUVGT	8GPVWTKETWDDGT	☼☼☼	┴↕Z!↕ ☼ ┴↕Z!↕	7
☼☼☼☼☼┴	4QCUVKPI(WIKVKXGOKUUKOPU	5RTC[%JCODGT◀%QPF	☼☼☼	┼┤↕Z!↕ ☼ !┤↕Z!↕	7
☼☼☼☼☼┴	4GXGTDGTCVQWTPCEGWIKVKXG ’OKUUKOPU	$CIJQWUG	☼☼☼	├┤↕Z!↕ ☼ →┤↕Z!↕	7
☼☼☼☼☼¶	#HVGTWNVKRNGCTV4QCUVGT♫ 4GXGTDGTCVQWTPCEGNWKFK\GF $GF4QCUVGTNGEVTKEVTPCEG	5RTC[%JCODGT◀$CIJQWUG	☼☼☼	┴!↕Z!↕ ☼ →!↕Z!↕	7

5QWTEG4GHGTGPEG

C ’OKUUKOPUPCEVQTUJTGZRTGUUKPNDQHRQNNWVGRVKVVGRTVQPHEQPEGPVTCVGRTQEGUUGEQPXGTVQMIRGTOGVTKEQPMI◀VQPPG♫ OWNVKRNGTCV[

addition to process emissions, significant quantities of fugitive emissions are also generated during material handling operations and furnace charging and tapping.[13]

As a general observation, particulate emissions from primary smelting operations are predominantly metallic fumes in the submicrometer range. A variety of particulate contaminants are typically emitted during the roasting process. They vary in composition depending on the particular ore being roasted. Copper and iron oxides are the primary constituents, but other oxides such as those of arsenic, antimony, mercury, lead, cadmium, and zinc may also be present with metallic sulfates and sulfuric acid. Combustion products from fuel burning also contribute to the emissions from roasters and reverberatory smelting furnaces.

Fugitive particulates emitted from primary copper smelting consist primarily of metallic oxides and dust. Major sources of fugitive emissions are shown in Figure 5-9.[10] Principal sources include ore concentrate unloading and handling, roaster calcine transfer operations, furnace tapping operations, and converter charging and skimming operations.

5.3.4 Emission Control Techniques

Control devices for particulate emissions from roasting, smelting, and converting operations include mechanical collectors (cyclones and settling flues), hot and cold ESPs, baghouses, and scrubbers. ESPs, usually preceded by mechanical collectors and operated at elevated temperatures, are by far the most common control devices.

The control techniques applied vary depending on smelter configuration, process equipment mix, emissions characteristics, and feasibility for SO_2 control. Off-gases from smelting equipment that produce relatively high concentrations of SO_2 (greater than 4 percent; includes fluidized bed roasters, non-reverberatory smelting furnaces, and converters) are generally treated in single- or double-contact sulfuric acid plants for SO_2 removal.

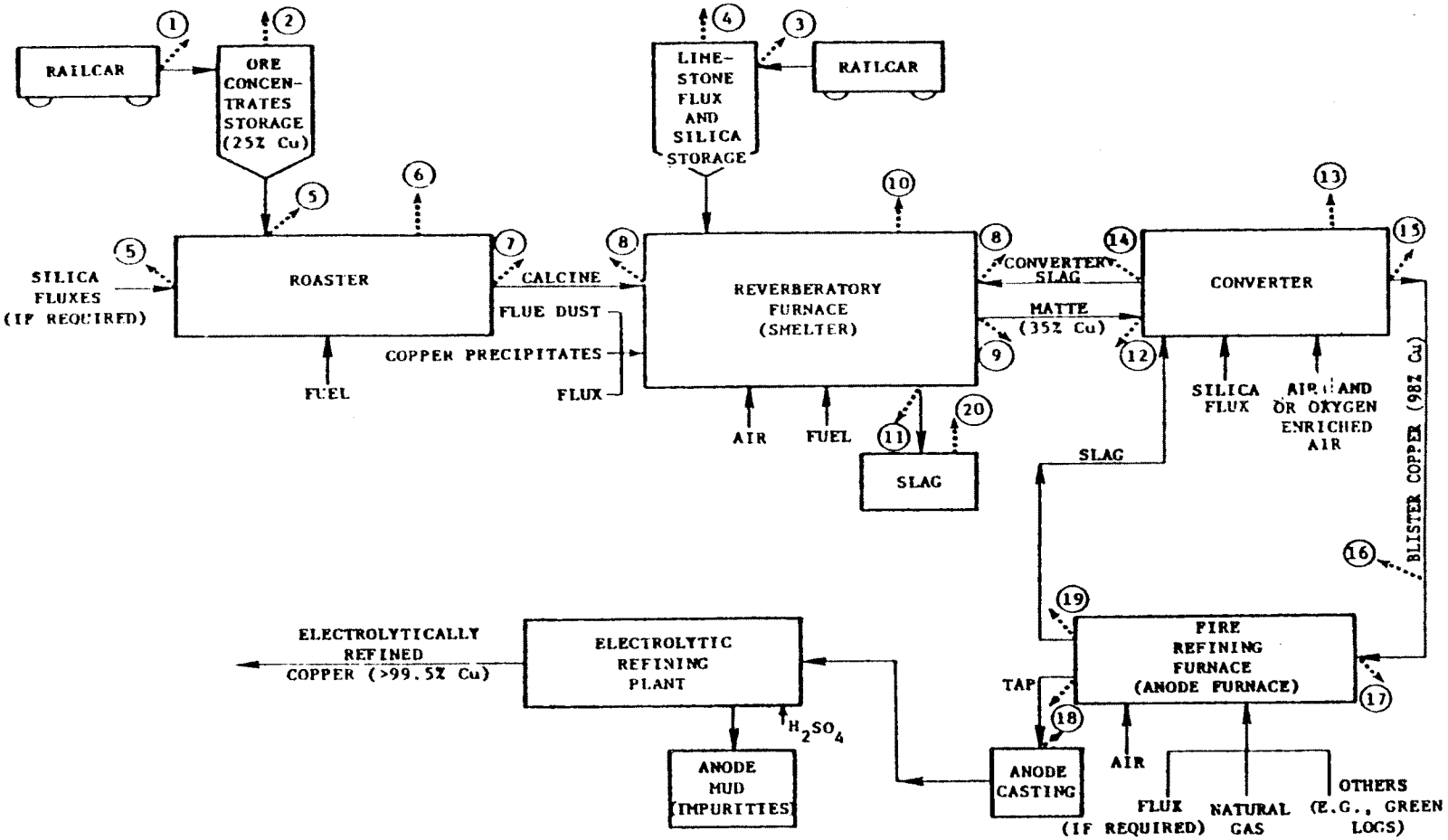

Figure 5-9. Fugitive Emission Sources at Primary Copper Smelters

Source: Reference 10.

Fugitive emissions produced by the majority of smelter fugitive sources, including concentrate handling, dried concentrate transfer, and furnace tapping (matte and slag), are controlled by enclosing the fugitive emission points in a hood and exhausting the captured emissions to a control device for collection. Fugitive emissions associated with converter operations are much more difficult to control. These emissions are substantial and occur during charging, skimming, or pouring operations when the converter mouth is rotated out from under the primary hood. They also result from primary hood leakage. Control techniques for converter fugitive emissions include secondary hoods of various designs and ventilating the converter building to a control device.[3]

5.3.5 Source Location

There are seven primary copper smelters in the United States. The names and locations of these seven smelters are listed in Table 5-6.[10] Three facilities are located in Arizona, two in New Mexico, and one each in Texas and Utah.

TABLE 5-6. PRIMARY COPPER SMELTERS IN THE UNITED STATES

Owner/Operator	Location
ASARCO, Incorporated	El Paso, Texas
ASARCO, Incorporated	Hayden, Arizona
Cyprus Miami Mining Corporation	Claypool, Arizona
Kennecott Utah Copper Corporation	Magna, Utah
Broken Hill Propriety	San Manuel, Arizona
Phelps Dodge-Chino Mines Company	Hurley, New Mexico
Phelps Dodge Mining Company	Playas, New Mexico (Hidalgo County)[a]

Source: References 10 and 11.

[a] Although the mailing address of the Phelps Dodge-Hidalgo smelter is Playas, New Mexico, the smelter is actually located in Hidalgo County, New Mexico.

5.4 Secondary Aluminum Operations

5.4.1 Source Description

Secondary aluminum operations involve the cleaning, melting, refining, alloying, and pouring of aluminum recovered from scrap, foundry returns, and dross. The processes used to convert scrap aluminum to secondary aluminum products such as lightweight metal alloy for industrial castings and ingots are presented in Figures 5-10 and 5-11.[14] Production involves two general classes of operations: scrap treatment and smelting/refining.

5.4.2 Process Description

Scrap treatment involves receiving, sorting, and processing scrap to remove contaminants and prepare the material for smelting. Processes based on mechanical, pyrometallurgical, and hydrometallurgical techniques are used, and those employed are selected to suit the type of scrap processed.

The smelting/refining operation generally involves the following steps: (1) charging, (2) melting, (3) fluxing, (4) alloying, (5) mixing, (6) demagging, (7) degassing, (8) skimming, and (9) pouring. All of these steps may occur at each facility, with process distinctions being in the furnace type used and emissions characteristics. However, as with scrap treatment, not all of these steps are incorporated into the operations at a particular plant. Some steps may be combined or reordered, depending on furnace design, scrap quality, process inputs, and product specifications.[14]

Purchased aluminum scrap undergoes inspection upon delivery and is sorted into the categories shown in Figure 5-10. Clean scrap requiring no treatment is transported to storage or is charged directly into the smelting furnace. The bulk of the scrap, however, must be manually sorted as it passes along a steel belt conveyor. Free iron, stainless steel, zinc, brass, and oversize

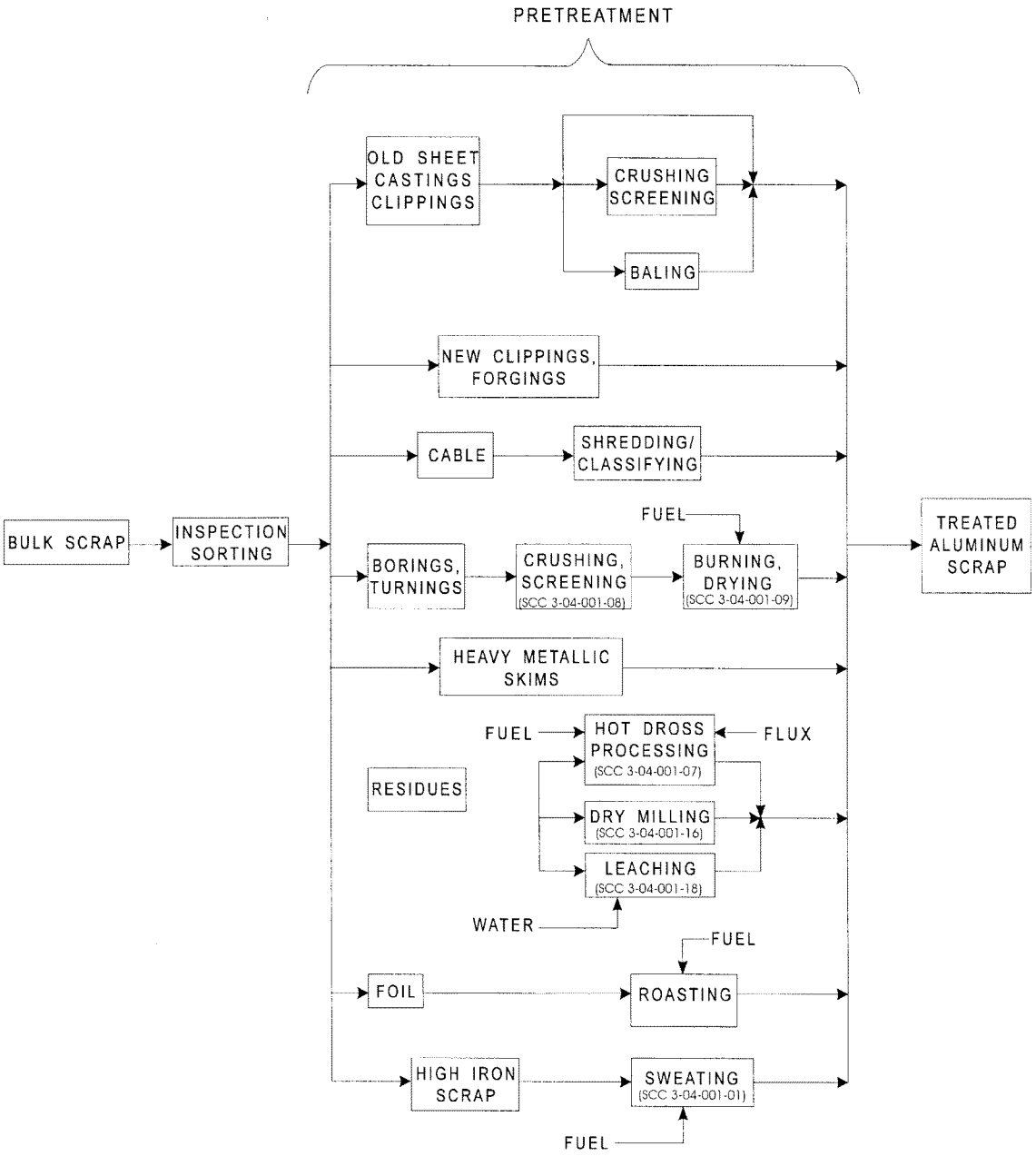

Figure 5-10. Typical Process Diagram for Pretreatment in the Secondary Aluminum Processing Industry

Source: Reference 14.

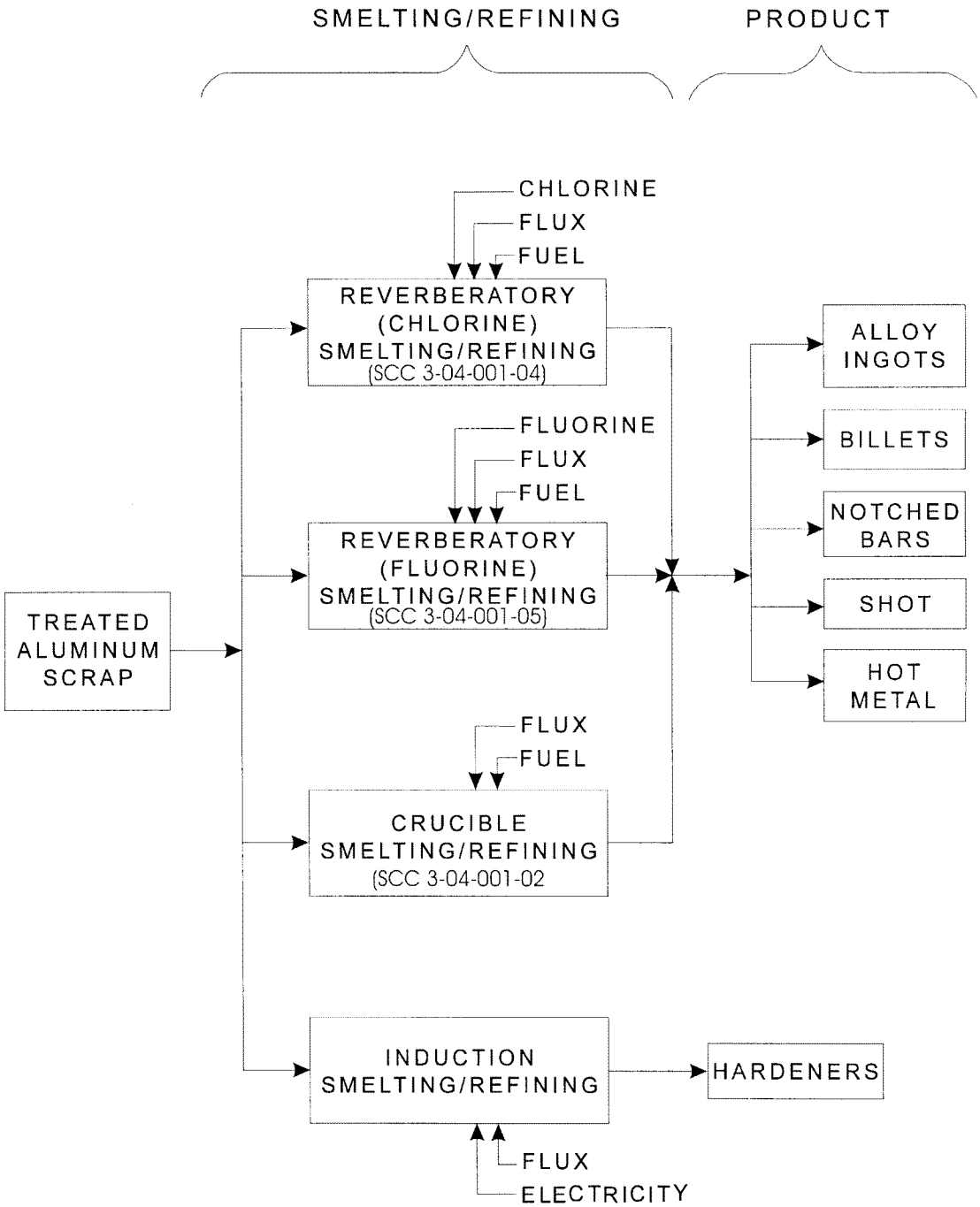

Figure 5-11. Typical Process Flow Diagram for the Secondary Aluminum Processing Industry

Source: Reference 14.

materials are removed. The sorted scrap then goes to appropriate scrap treating processes, if necessary, or is charged directly to the smelting furnace. The more common scrap treatment processes are discussed in the following paragraphs.

Sorted scrap is conveyed to a ring crusher or hammer mill where the material is shredded and crushed, and the iron is torn away from the aluminum. The crushed material passes over vibrating screens to remove dirt and fines, and tramp iron is removed by magnetic drums and/or belt separators. Baling equipment compacts bulky aluminum scrap into bales.

Pure aluminum cable with steel reinforcement or plastic insulation is cut by alligator-type shears and granulated or further reduced in hammer mills to separate the iron core and the plastic coating from the aluminum. Magnetic processing removes the iron and air classification separates the insulation. Borings and turnings, in most cases, are treated to remove cutting oils, greases, moisture, and free iron. The processing steps involved are (1) crushing, (2) drying to remove oil and moisture, (3) screening to remove aluminum fines, (4) removing iron magnetically, and (5) storing the clean dried borings in tote boxes.[14]

Several types of residue from primary and secondary aluminum plants contain recoverable amounts of aluminum. Aluminum is recovered from hot and cold drosses by batch fluxing in rotary furnaces. In the dry milling process, cold aluminum dross and other residues are processed by milling, screening, and concentrating to reduce oxides and non-metallic materials to fine powders, yielding a product which is 60 to 70 percent aluminum.

Drosses, skimmings, and slags are treated by leaching to remove fluxing salts and other nonrecoverable materials. First, the raw material is fed into a long, rotating drum or an attrition or ball mill, from which soluble contaminants are leached. The washed material is then screened to remove fines and dissolved salts and is dried and passed through a magnetic separator to remove ferrous materials. The non-magnetic materials are then stored or charged directly to the smelting furnace.

Aluminum foil is treated by roasting to separate carbonaceous materials associated with the aluminum.

Sweating is a pyrometallurgical process using open-flame reverberatory furnaces to recover aluminum from scrap with high iron content. The aluminum and other constituents with low-melting temperatures melt, trickle down the hearth, through a grate, and into molds or collecting pots. The materials with higher-melting temperatures, including iron, brass, and oxidation products formed during the sweating process, remain in the furnace until they are removed. Treated aluminum scrap is transferred to the smelting/refining operations for refinement into finished products.

In smelting/refining operations, reverberatory furnaces are commonly used to convert clean, sorted scrap, sweated pigs, or untreated scrap to ingots, shot, or hot metal. The scrap is first mechanically charged to the furnace, often through charging wells designed to introduce chips and light scrap below the surface of a previously melted charge ("heel"). Batch processing is generally practiced for alloy ingot production, and continuous feeding and pouring are generally used for products having less strict specifications.

Cover fluxes are used to prevent oxidation of the melt caused by air contact. Solvent fluxes react with non-metallic materials, such as burned coating residues and dirt, to form insoluble materials that float to the surface as part of the slag. Alloying agents are charged to the furnace in amounts determined by product specifications. Nitrogen or other inert gases can be injected into the molten metal to help raise dissolved gases (typically hydrogen) and intermixed solids to the surface.

Demagging reduces the magnesium content of the molten charge from approximately 0.3 to 0.5 percent (typical scrap value) to about 0.1 percent (typical product line alloy specification). When demagging with chlorine gas, chlorine is injected under pressure through carbon lances to react with magnesium and aluminum as it bubbles to the surface. Other

chlorinating agents or fluxes, such as anhydrous aluminum chloride or chlorinated organic compounds, are sometimes used.

In the skimming step, contaminated semi-solid fluxes (dross, slag, or skimmings) are ladled from the surface of the melt and removed through the forewell. The melt is then cooled before pouring.

The reverberatory (fluorine) process is similar to the reverberatory (chlorine) smelting/refining process, except that aluminum fluoride (AlF_3) is employed in the demagging step instead of chlorine. The AlF_3 reacts with magnesium to produce molten metallic aluminum and solid magnesium fluoride salt, which floats to the surface of the molten aluminum and is skimmed off.

The crucible smelting/refining process is designed to produce harder aluminum alloys by blending pure aluminum and hardening agents in an electric induction furnace. The process steps include charging scrap to the furnace, melting, adding and blending the hardening agent, skimming, pouring, and casting into notched bars.[14]

5.4.3 Emissions and Control

Each processing step in the secondary aluminum industry is a potential source of arsenic emissions, which are generally emitted as PM. Arsenic emissions will be a small fraction of total particulate emissions and will vary with the arsenic content of the scrap. Table 5-7 presents arsenic emission factors for specific processing units.[15,16]

Data for arsenic emissions from secondary aluminum processing facilities were scarce. Currently, emissions data from secondary aluminum facilities are being collected for inclusion in the secondary aluminum MACT, which may augment the information provided here.

6#$.'ffi┤☼├ffiffi#45'0+%ffi'/+55+10ffi(#%6145ffi(14ffi5'%10&#4;ffi#.7/+07/ffi241&7%6+10

5%%0WODGT	'OKUUKQP5RWTEG	%QPVTQNXKEG	'OKUUKQP(CEVQT KPND◄VQP[C]	'OKUUKQP(CEVQT4CPIG KPND◄VQP[C]	'OKUUKQP (CEVQT4CVKPI	4GHGTGPEG
┤☼┤┤☼┤↕!!☼┤←	$WTPKPI◄&T[KPI	8GPVWTKETWDDGT	┤┤┤Z!!↕	┤┤┤Z!!↕ ☼ ┤┤┤Z!!↕ ☼	7	!!┤
		$CIJQWUG	!!┤┤Z!!↕ ☼	!!┤┤Z!!↕ ☼ !!┤┤Z!!↕ ☼	7	!!┤
		/WNVKRNKGENQPGU	¶┤!!Z!!↕	!!┤↑Z!!↕ ☼ ¶┤┤Z!!↕ ☼	7	!!↑

[C] 'OKUUKQP HCEVQTUTGGZRTGUUKPNDQHRQNNWVCPVKVVGRGTVQPQHCNWOKPEVPURTQEGUUGFQEQPXGTVQMIRGTOGVTKEQPMI◄VQPPG♂♫
OWNVKRD[[↕┤┤┤
[D] &GVGEVKNKOKWUGKPGOKUUKQPEVQHCNEWNCVKQP┤

┤☼┤

There is potential for particulate emissions from several processing steps, including crushing/screening, shredding/classifying, baling, burning/drying, dross processing, roasting, smelting/refining, and demagging. Particulate emissions may also be released by leaching operations during drying. Fumes may be emitted from fluxing reactions. Arsenic emission levels from each of these processes depends on the arsenic content of the feed introduced to each unit step.[14]

Typical control devices at secondary aluminum operations include baghouses, multicyclones, scrubbers, and local ventilation. These have been designed primarily for PM control; but in controlling PM, gaseous arsenic emissions are controlled.

5.5 Ferroalloy Production

5.5.1 Source Description

The term "ferroalloy" refers to an alloy of iron with some element other than carbon. Ferroalloys are typically used to impart distinctive qualities to steel and iron. Production of calcium carbide and silicon metal are also included in the ferrolloy source category (though they are not ferralloys) because they are manufactured using essentially the same equipment and processes.

The ferroalloy industry is closely related to the iron and steel industries, its largest consumers. Ferroalloys provide unique qualities to steel and cast iron and serve important functions during iron and steel production cycles. The primary ferroalloys are those of chromium, manganese, and silicon. In addition, boron, cobalt, columbium, copper, molybdenum, nickel, phosphorus, titanium, tungsten, vanadium, zirconium, and the rare earths provide special characteristics and are often added as ferroalloys.

In 1989, the United States ferroalloy production was approximately 985,000 tons, significantly less than shipments in 1975 of approximately 1,770,000 tons. There were 28 companies that produced ferroalloys in 1989.[17]

5.5.2 Process Description

Ferroalloys are typically produced with submerged electric arc furnaces; however, exothermic (metallothermic) reaction furnaces and electrolytic cells can also be used to produce ferroalloys. Table 5-8 presents furnace descriptions along with their ferroalloy products. A typical ferroalloy plant is illustrated in Figure 5-12.[17]

Submerged electric arc furnaces usually produce a desired product directly, however, they may also produce an intermediate product that is subsequently used in additional processing methods. The submerged arc process is a reduction process. The reactants are made up of metallic ores (ferrous oxides, silicon oxides, manganese oxides, chrome oxides, etc.) and a carbon-source reducing agent, typically in the form of coke, charcoal, high- and low-volatility coal, or wood chips. Sometimes limestone is added as a flux material. Before being conveyed to a mix house for blending and weighing, raw materials are crushed, sized, and in some instances, dried. The processed material is then transported by conveyers, buckets, skip hoists, or cars to hoppers above the furnace. The mix is then gravity-fed through a feed chute as needed (i.e., continuously or intermittently). At high temperatures in the reaction zone, the carbon source reacts with metal oxides to form carbon monoxide and to reduce the ores to base metal. A typical reaction yielding ferrosilicon is presented below:

$$Fe_2O_3 + 2SiO_2 + 7C - 2FeSi + 7\ CO$$

Smelting in an electric arc furnace is established by converting electrical energy to heat. As an alternating current is applied to the electrodes, current is forced to flow through the charge between the electrode tips. This produces a reaction zone at temperatures up to 3,632(F. The tip

TABLE 5-8. FERROALLOY PROCESSES AND RESPECTIVE PRODUCT GROUPS

Process	Product
Submerged arc furnace[a]	Silvery iron (15-22% Si) Ferrosilicon (50% Si) Ferrosilicon (65-75% Si) Silicon metal Silicon/manganese/zirconium (SMZ) High carbon (HC) ferromanganese Siliconmanganese HC ferrochrome Ferrochrome/silicon FeSi (90% Si)
Exothermic[b]	
Silicon reduction	Low carbon (LC) ferrochrome LC ferromanganese Medium carbon (MC) ferromanganese
Aluminum reduction	Chromium metal Ferrotitanium Ferrocolumbium Ferovanadium
Mixed aluminothermal/silicothermal	Ferromolybdenum Ferrotungsten
Electrolytic[c]	Chromium metal Manganese metal
Vacuum furnace[d]	LC ferrochrome
Induction furnace[e]	Ferrotitanium

5QWTEG4GHGTGPEG

C 2TQEGUUGU YJKEJ OGVCNNWTIKECNNCDQTCVQT[NKEJ CTG WUGNNCDNG UWDOGTIGFGTCNNCDNG JKVG GNGEVTQFGU┼

D 2TQEGUUGU YJKEJ OQNVGP CTG OCVGTKCNUTGFWEGF FP GZQVJGTOKE CEVKQP [CFFKVKQPCN UKNKEQP PWOKPWO QTCEQODKPCVKQP PJGVYQ┼

E 2TQEGUUGU YJKEJ UKORNKEKVCNNCDNG EN[TQOKWOCOCPICPGUG CPGNGEVTQN[VGTRNCVGP ECVJQFGU FKTGEVNQY XQNVCEG VTTGPV┼

F 2TQEGUUGU YJKEJ ECTDQPCTUTGOQXGF HTQO NQNKF UVCNKGU ECTDQPCTGTTQEJTQOGVJKPXCEWWO TPCEGU OCKPVCKPGF VGORGTCVWTGU DGNVKPPQKPQH CNNQ[┼

G 2TQEGUUGU C\EQPXGTVGN NGEVTKEGP GTI[KPVQ QGCV KVJQWV NGEVTQFGU QO GNV VGVCEUCTIGUKPCEWRQTFTWO UJCRGXFGUUGN

┼☼┼↕

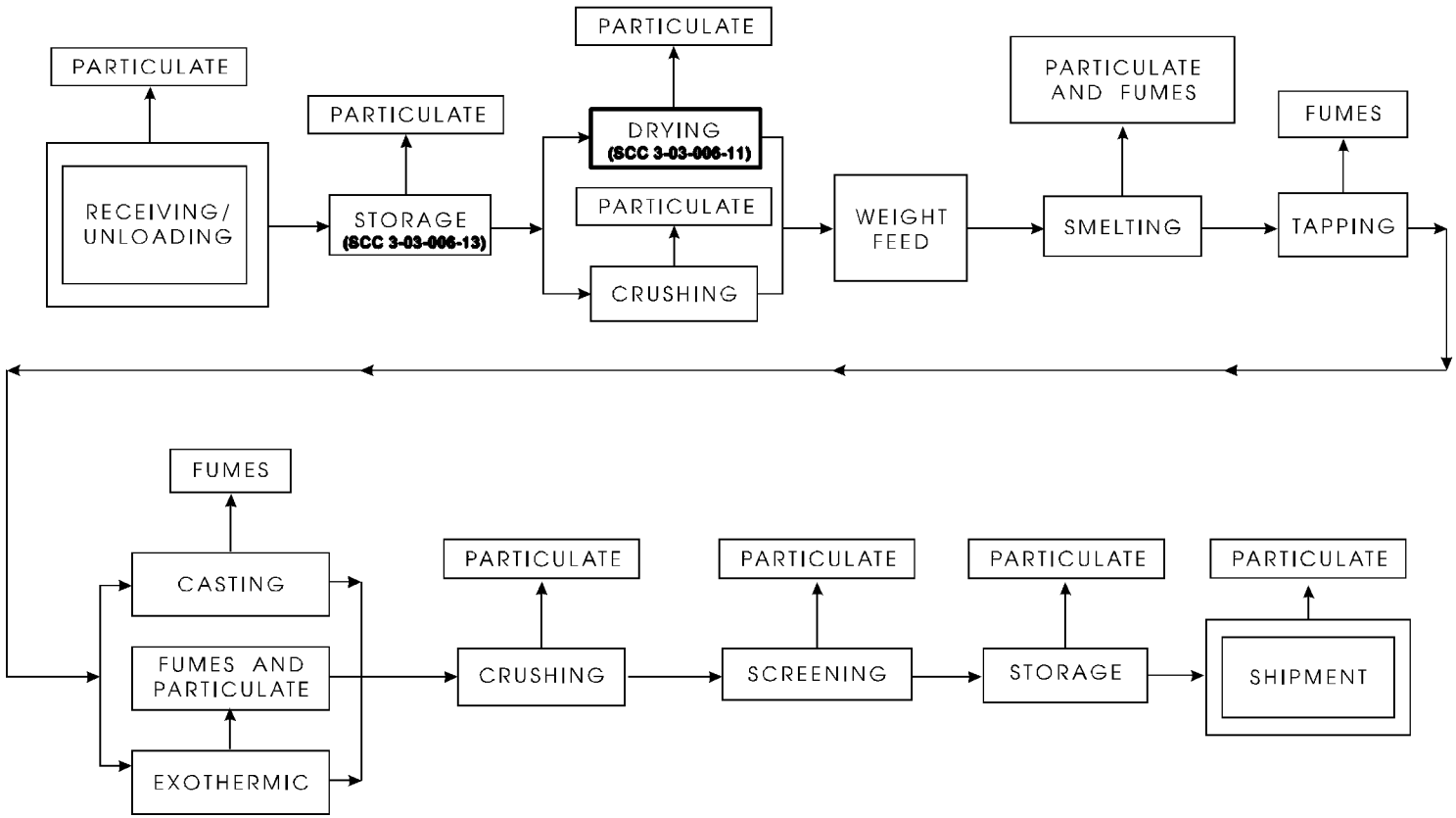

Figure 5-12. Typical Ferroalloy Production Process

Source: Reference 17.

of each electrode switches polarity continuously as the alternating current flows between the tips. A uniform electric load is maintained by continuously varying electrode depth by mechanical or hydraulic means.

Figure 5-13 depicts the design of a typical covered submerged electric arc furnace.[17] The lower portion of the furnace is comprised of a cylindrical steel shell with a flat bottom or hearth. The shell is sometimes water-cooled to protect it from the heat of the process. For covered or semi-covered furnaces (but not for open-design furnaces), a water-cooled cover and fume collection hood are installed over the furnace shell. Typically, three carbon electrodes extend through the cover and into the furnace shell opening. Raw materials can be charged to the furnace through feed chutes from above the furnace. The surface of the furnace charge, which contains both molten material and unconverted charge during operation, is normally kept near the top of the furnace shell. The lower portions of the electrodes are placed at about 3 to 5 feet under the charge surface. Three-phase electric current arcs from electrode to electrode traveling through the charge material. As the electric energy is converted to heat, the charge material melts and reacts to form the desired product. The carbonaceous material in the furnace charge reacts with oxygen in the metal oxides of the charge and reduces them to base metals. This reaction generates large quantities of carbon monoxide that exits upwards through the furnace charge. The molten metal and slag are tapped through one or more tap holes protruding through the furnace shell at the hearth level. While power is applied continuously, feed material may be charged intermittently or continuously. Tapping, whether intermittent or continuous, is based on production rate of the furnace.[17]

There are two basic types of submerged electric arc furnaces, open and covered. The majority of the submerged electric arc furnaces in the U.S. are open furnaces. The open type furnaces have a fume collection hood at least 3.3 feet above the top of the furnace shell. In some situations, adjustable panels or screens are used to reduce the open space between the furnace and hood. This is also done to improve emissions capture efficiency. Fabric filters and ESPs are often used to control emissions from open furnaces.

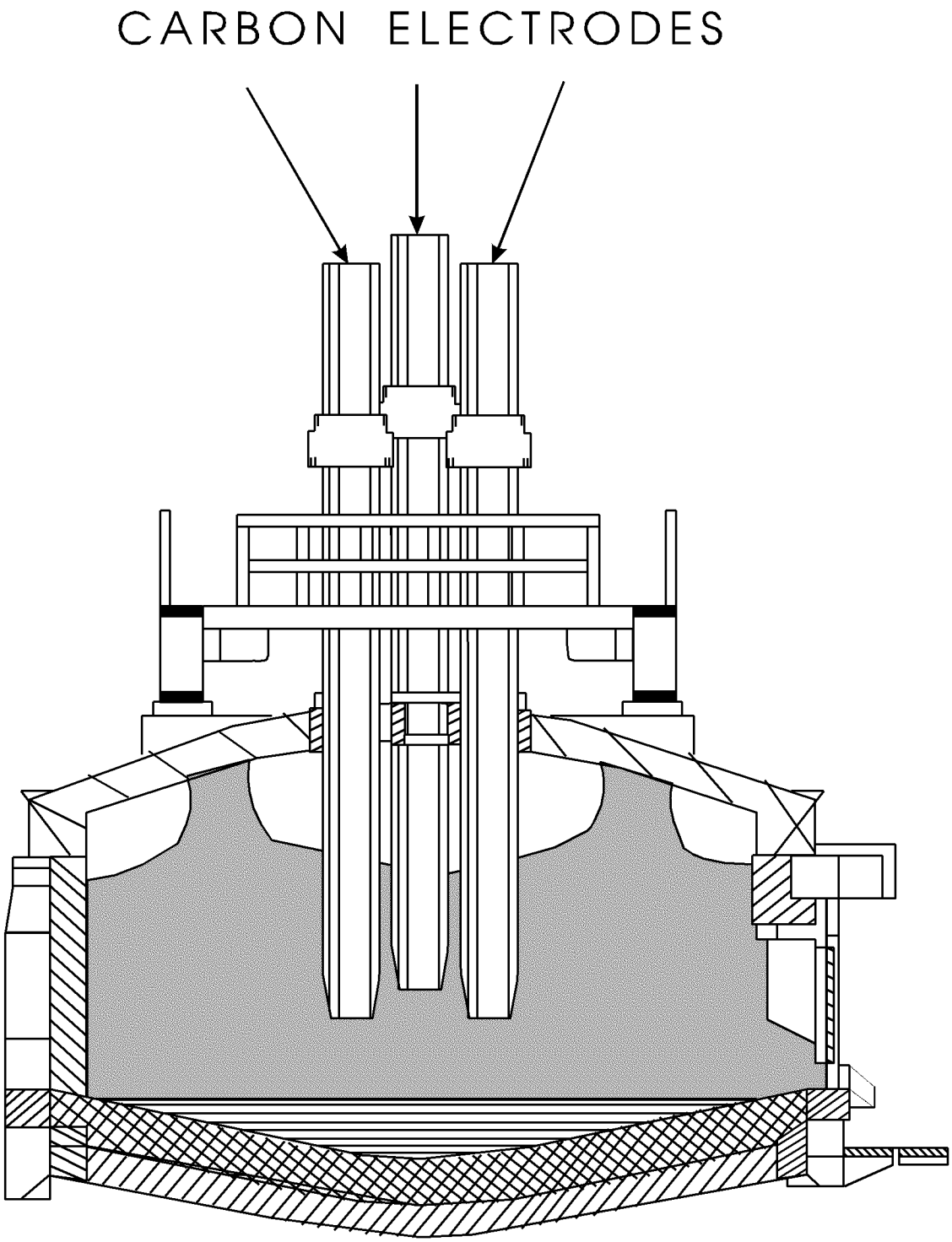

Figure 5-13. Typical Submerged Arc Furnace Design

Source: Reference 17.

Some covered furnaces have a water-cooled steel cover that fits closely to the furnace shell. The goal of covered furnaces is to limit air filtration into the furnace gases, thereby reducing combustion of the gas. In doing so, the volume of gas requiring collection and treatment is reduced. Holes in the cover allow for the charge and electrodes to pass through. Covered furnaces that partially close these hood openings with charge material are referred to as "mix sealed" or "semi-closed furnaces." While these covered furnaces significantly reduce air infiltration, some combustion still occurs under the furnace cover. Covered furnaces equipped with mechanical seals around the electrodes and sealing compounds are referred to as "sealed" or "totally closed." These types of furnaces have minimal, if any, air infiltration and undercover combustion.

Removal of the molten alloy and slag that accumulate on the furnace hearth is done through a tap hole. Typically this process takes 20 to 30 minutes. The molten metal and slag pour from the tap hole into a carbon-lined trough, then into a carbon-lined runner that directs the metal and slag into a reaction ladle, ingot molds, or chills.

After the large ferroalloy castings are allowed to cool and solidify, they may be broken with drop weights or hammers. Broken pieces are then crushed, screened (sized), and stored in bins until shipment.

The exothermic (metallothermic) process uses an intermediate molten alloy which may come directly from a submerged electric arc furnace or from another type of heating apparatus. The process is typically used to produce high-grade alloys with low-carbon content. As silicon and aluminum react with oxygen in the molten-alloy, low- and medium-carbon content ferrochromium and ferromanganese are produced. Aluminum reduction is used to produce chromium, ferrotitanium, ferrovanadium, and ferrocolumbium. A mixed alumino/silico thermal process is used to produce ferromolybdenum and ferrotungsten. Typically, exothermic processes are performed in open vessels and may have similar emissions to the submerged arc process for short periods during reduction.

Electrolytic processes are used to manufacture high-purity manganese and chromium. Electrolysis of an electrolyte taken from manganese ore or manganese-bearing ferroalloy slag is used to produce manganese. The following steps complete the process: (1) roasting the ore to convert it to manganese oxide, (2) leaching the roasted ore with sulfuric acid to solubilize manganese, (3) neutralization and filtration to extract iron and aluminum hydroxides,(4) purifying the leach liquor by treatment with sulfide and filtration to remove metals, and (5) electrolysis.

Electrolytic chromium is typically produced from high-carbon ferrochromium. Hydrogen gas is produced by dissolving the alloy in sulfuric acid. The leachate is treated with ammonium sulfate and conditioned to remove ferrous ammonium sulfate and produce a chrome-alum for feed to the electrolysis cells.[17]

5.5.3 Emissions and Controls

Particulate is generated from several operations during ferroalloy production. These operations include raw material handling, smelting, tapping, and product handling. Organic emissions are emitted almost entirely from smelting operations. The furnaces where smelting is completed are the primary (almost exclusive) sources of potential particulate and organic emissions. The reader is referred to Section 12.5 of AP-42 for particulate and size specific particulate emissions factors for submerged arc electric furnaces.[17] Table 5-9 presents arsenic emission factors for semi-covered electric arc furnaces.[18]

Particulate emissions in the form of fumes from electric arc furnaces make up the vast majority (94 percent) of the total particulate emissions from the ferroalloy industry. In addition, substantial quantities of carbon monoxide and organic materials are emitted from electric arc furnaces. Organic emissions are much higher from covered furnaces than from open furnaces. In addition, dust is generated from a variety of activities including raw material storage and handling, heavy vehicle traffic, crushing, sizing and drying. Rotary and other types of dryers are

6#$.'ffi┤☼┤ffiffi#45'0+%ffi'/+55+10ffi(#%6145ffi(14ffi'.'%64+%ffi#4%ffi(740#%'5

5%%	'OKUUKQP 5QWTEG	%QPVTQN 8GXKEG	#XGTCIG OKUUKQP KPND◄/9J[C]	'OKUUKQP KPND◄/9J[C]	'OKUUKQP 4CVKPI
┤☼┤☼┤↕┤☼┤!!	'NGEVTKE 4TE(WTPCEG	0QPG	¶┤↑┬Z!!↕	0#	7
┤☼┤☼┤↕┤☼┤¶	'NGEVTKE 4TE(WTPCEG[D]	0QPG	!!┤←↕Z!!↕ ☼┴	0#	7
┤☼┤☼┤↕┤☼┤¶	'NGEVTKE 4TE(WTPCEG[E]	8GPVWTK 5KTWDDGT	!!┤┤↕Z!!↕☼┬	0#	7

5QWTEG 4GHGTGPE┤G

[C] 'OKUUKQP 1PCEVQT KUGZRTGUUKP KPND QH RQNNWVCPV CPVKVVGF 7 9J QH GPGTI[EQPUWOQ[F HWTPCEG 6QEQPXGTVQ MI◄/9J,♫ OWNVKRN[[↕┤┤┤┤
[D] 5GOK☼UGCNGHG♫TTQUKNKEQQF WEVKQP┤
[E] 5GCNGF♫UKNKEQOCPICPRTQQF WEVKQP┤

┤☼┤

often used to dry raw materials. These dryers can generate substantial quantities of particulate emissions.

The majority of open electric arc furnaces are controlled with fabric filters, although to a much lesser extent, scrubbers and electrostatic precipitators are also used.

For covered furnaces, two emission capture systems are necessary. While a primary capture system is used to withdraw gases from under the furnace cover, a secondary system captures fumes released around the electrode seals during tapping. Scrubbers are the most common control device used to control exhaust gases from sealed furnaces. Afterburners are always used to burn off CO after control devices for covered furnaces.

Tapping operations also generate fumes. Some plants capture these emissions with a main canopy hood, while others use separate tapping hoods ducted to either the furnace emissions control device or a separate control device.

Dust from pretreatment activities may be controlled by dust collection equipment such as scrubbers, cyclones, or fabric filters.

5.6 Iron and Steel Foundries

5.6.1 Process Description

Iron and steel foundries produce gray, white, ductile, or malleable iron and steel castings. Both cast irons and steels are solid solutions of iron, carbon, and various alloying materials. Although there are many types of iron and steel, groups can be distinguished by their carbon composition. Cast iron typically contains 1 percent carbon or greater; cast steel usually contains less than 1 percent carbon.[18, 19]

ED_000719_00032208-00179

Iron castings are used in many types of equipment, including motor vehicles, farm machinery, construction machinery, petroleum industry equipment, electrical motors, and iron and steel industry equipment.

Steel castings are used in railroad equipment, construction machinery, motor vehicles, aircraft, agricultural equipment, ore refining machinery, and chemical manufacturing equipment.[18] Steel castings are classified on the basis of their composition and heat treatment, which is determined by their end use. Classifications include carbon, low-alloy, heat-resistant, corrosion-resistant, and wear-resistant.

The following four basic operations are performed in all iron and steel foundries:

& Storage and handling of raw materials;

& Preparation of the molds to shape the molten metal;

& Melting of the raw materials; and

& Pouring of hot molten metal into molds.

Other processes present in most foundries include:

& Sand preparation and handling;

& Mold cooling and shakeout;

& Casting cleaning, heat treating, and finishing;

& Coremaking;

& Pattern making; and

& Sand reclamation.

A generic process flow diagram for iron and steel foundries is shown in Figure 5-14.[18] Figure 5-15 depicts the emission points in a typical iron foundry.[17]

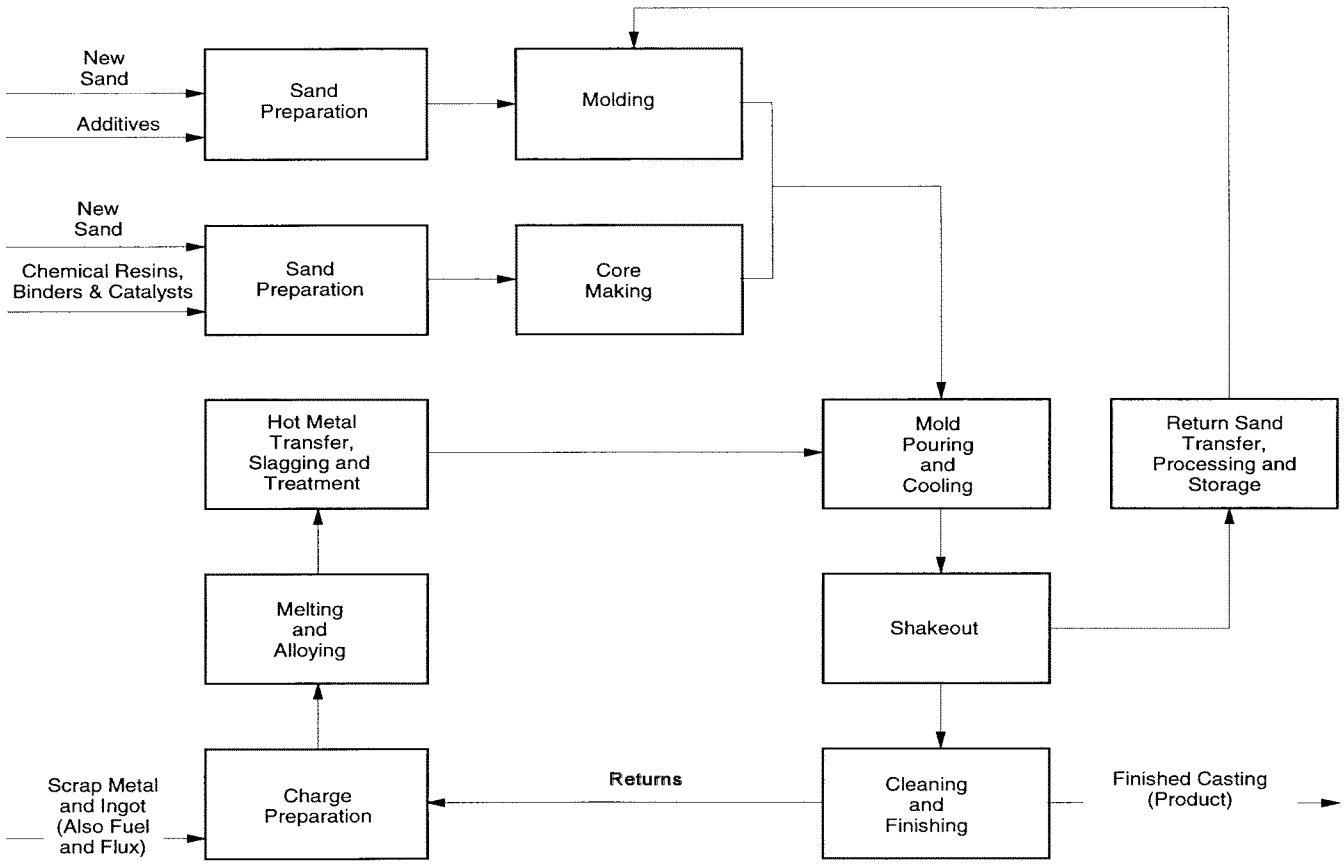

Figure 5-14. Process Flow Diagram for a Typical Sand-Cast Iron and Steel Foundry

Source: References 18 and 20.

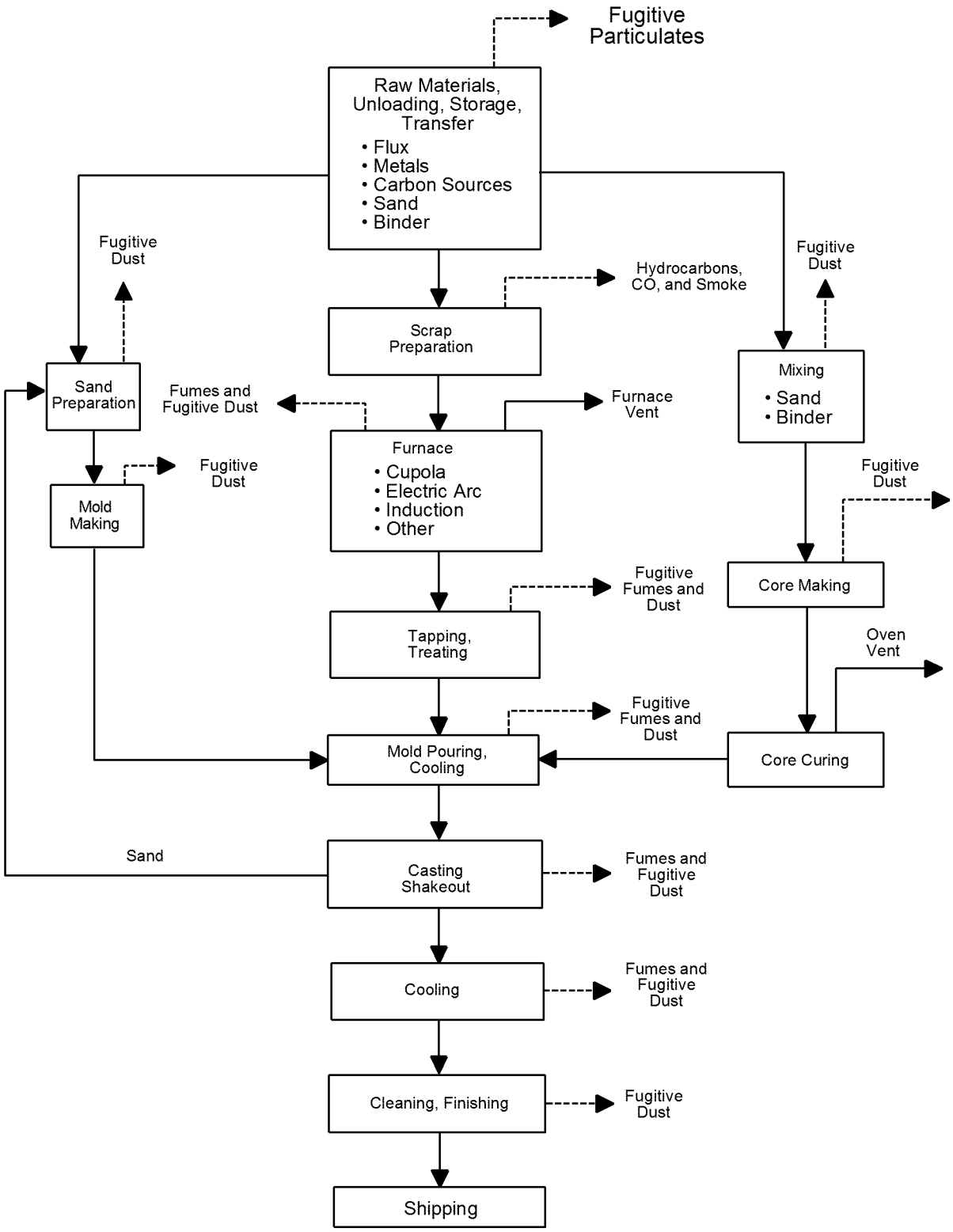

Figure 5-15. Emission Points in a Typical Iron and Steel Foundry

Source: References 17 and 20.

Metal Melting Process

In a typical foundry operation, charges to the melting unit are sorted by size and density and cleaned (as required) prior to being put into the melter. Charges consist of scrap metal, ingot, carbon (coke), and flux. Prepared charge materials are weighed and transferred into the melting furnace by crane buckets, skip hoists, or belt feeders. The charge in an electric furnace or cupola is heated until it reaches a certain temperature and the desired product chemistry of the melt has been attained. After the desired product is obtained, the molten metal is either poured out of the furnace into various-size transfer ladles and then into the molds or it is transferred to holding furnaces for later use.

The metal melting process in iron and steel foundries is accomplished in cupolas and in electric arc furnaces (EAFs) and electric induction furnaces (EIFs). Cupolas are used to melt iron for casting and are charged with alternate layers of coke, metallics, and fluxes. Combustion air is introduced into the cupola through tuyeres located at the base. The heat produced by the burning coke melts the iron, which flows down and is tapped from the bottom of the cupola. Fluxes combine with impurities in the charge and form slag, which is removed through tap holes located above the level of the metal tap hole. Cupola capacities range primarily from 1 to 30 tons per hour, with a few large units capable of producing close to 100 tons per hour. Larger furnaces are operated continuously for several days with inspections and cleanings between operating cycles.[21]

Iron and steel castings are produced in a foundry by pouring molten metal into molds made of sand, metal, or ceramic material. Steel foundries rely on EAFs or induction furnaces for melting purposes. In all types of foundries, when the metal has solidified, the molds are destroyed and the castings are removed on a shakeout unit. Abrasive (shotblasting) cleaning, grinding, and heat treating are performed as necessary. The castings are then inspected and shipped to plants of other industries for machining and assembly into a final product.[18]

Mold and Core Production

In addition to melting, the casting or mold pouring and cooling operations in iron and steel foundries are suspected to be a source of arsenic emissions. Also, mold preparation and casting shakeout (removal from the mold) activities are also suspect as arsenic emission sources, although test data are not available to quantify actual arsenic emissions.

5.6.2 Emission Control Techniques

Control technologies commonly used to control arsenic emissions from iron and steel foundry metal melting operations include baghouses and wet scrubbers. Fugitive emissions from molding, casting, and shakeout are generally controlled with local hooding or building ventilation systems that are ducted to a control device (predominantly baghouses).[21]

5.6.3 Emission Factors

Arsenic emission factors were available for an arc furnace in a steel mill and cupola within an iron foundry. These emission factors are presented in Table 5-10.[22,23]

5.6.4 Source Locations

There were 756 iron and steel foundries in the United States in 1992 based on a survey conducted by the EPA in support of the iron and steel foundry Maximum Achievable Control Technology (MACT) standard development.[24] In general, foundries are located in areas of heavy industry and manufacturing, especially areas where iron and steel are produced (e.g., the Great Lakes States).

6#$.'ffi┤☼!!↕┤ffiffi#45'0+%ffi'/+55+10ffi(#%6145ffi(14ffi+410ffi#0&ffi56''.ffi(170&4+'5

5%%0WODGT	OKUUKOPQWTEG	%QPVTQNXKEG	'OKUUKQPEVQT KPND◄VQP	'OKUUKQPEVQT KPND◄VQP	'OKUUKQPEVQT 4CVKPI	4GHGTGPEG
┴☼↔☼↕!!☼→	(CDTKECVGGVCN 2TQFWEVUTE (WTPCEG	$CIJQWUG	┤┤↑¶Z!!↕ ☼↑ UVGGNRTQFWEGF♂	┬┴┤Z!!↕ ☼↑ ☼ ┤┬←Z!!↕ ☼↑	7	¶¶
┴☼┬☼↕┴☼!!	+TQPQWPFT[%WRQNC	0QPG	┴┤¶Z!!↕ ☼	☼☼☼	7	¶┴
		$CIJQWUG	←┼←Z!!↕ ☼↑	↑┤!!Z!!↕ ☼↑ ☼ !!┤┤!!Z!!↕ ☼	7	¶┴

C 'OKUUKOPCEVQTUTGGZRTGUUKPNDQHRQNNWVCPOKVVGRGTVQPQHECUVRKRGRTQFWEGFQEQPXGTVQMIRGTOGVTKEQPMI◄VQPPG♂DWNVKRN[
D[↕┤┤┤
D 2TQEGUPUTQXKFGUQNVGKPQPHQTRTQFWEVKQPEGPVTKHWICNN[☼ECTQPRKRG┤4CYOCVGTKCKPLENWRGKIKTQPJUETCRTQPJUVGGNUETCREQMGCP
NKOGUVQPG┤

K☼☼L OGCPFUCVCPQVCXCKNCDNG┤

┴☼┤

References For Section 5.0

1. Woodbury, W.D. *Annual Report 1990, Lead*. Washington, D.C.: Bureau of Mines, U.S. Department of the Interior, U.S. Government Printing Office, April 1992.

2. U.S. EPA. *Compilation of Air Pollutant Emission Factors*, 5th ed. (AP-42), Vol. I: Stationary Point and Area Sources, Section 12.6: Primary Lead Smelting. Research Triangle Park, North Carolina: U.S. Environmental Protection Agency, Office of Air Quality Planning and Standards, 1995.

3. U.S. EPA. *Control Techniques for Lead Air Emissions*, Unpublished Draft. Research Triangle Park, North Carolina: U.S. Environmental Protection Agency, Office of Air Quality Planning and Standards, Emission Standards Division, 1990.

4. U.S. EPA. *Preliminary Study of Sources of Inorganic Arsenic*. EPA-450/5-82-005. Research Triangle Park, North Carolina: U.S. Environmental Protection Agency, Office of Air Quality Planning and Standards, August 1982.

5. U.S. EPA. *Secondary Lead Smelting Background Information Document for Proposed Standards*, Volume 1. EPA-450/R-94-024a. Research Triangle Park, North Carolina: U.S. Environmental Protection Agency, Office of Air Quality Planning and Standards, June 1994. pp. 2-1 to 2-36.

6. Hall, R.M. and J.L. Gittleman. *Control Technology for Metal Reclamation Industries at Sanders Lead Company Inc.* CT-202-11a. Cincinnati, Ohio: U.S. Department of Health and Human Services, Engineering Control Technology Branch, Division of Physical Sciences and Engineering, NIOSH, July 1993. pp. 1-8.

7. Rives, G.D. and A.J. Miles, Radian Corporation. "Control of Arsenic Emissions from the Secondary Lead Smelting Industry - Technical Document." Prepared for U.S. Environmental Protection Agency, Research Triangle Park, North Carolina, 1985.

8. Pacific Environmental Services, Inc. *Draft Final Test Report, East Penn Manufacturing Company, Secondary Lead Smelter*, Volume I, Report and Appendices A and B. Research Triangle Park, North Carolina: Pacific Environmental Services, Inc, March 15, 1994.

9. U.S. EPA. *Assessment of the Controllability of Condensible Emissions*. EPA-600/8-90-075. Research Triangle Park, North Carolina: U.S. Environmental Protection Agency, Air and Energy Engineering Research Laboratory, October 1990.

10. U.S. EPA. Primary Copper Smelters. *National Emission Standards for Hazardous Air Pollutants (NESHAP)*, Final Summary Report. ESD Project No. 91/61. Research

Triangle Park, North Carolina: U.S. Environmental Protection Agency, Office of Air Quality Planning and Standards, Emission Standards Division, July 1995.

11. Parameswaran, K. AsarcoInc. New York, NY. Fax to Phil Marsosudiro. Eastern Research Group. November 26, 1997

12. U.S. EPA. *Control Techniques for Lead Air Emissions*, Vol. II, Chapter 4 to Appendix B. EPA-450/2-77-012. Research Triangle Park, North Carolina: U.S. Environmental Protection Agency, Office of Air Quality Planning and Standards, Emission Standards Division, 1977.

13. U.S. EPA. *Inorganic Arsenic Emissions from High-Arsenic Primary Copper Smelters - Background Information for Proposed Standards*. EPA-450/3-83-009a. Research Triangle Park, North Carolina: U.S. Environmental Protection Agency, April 1983.

14. AP-42, 5th ed., *op. cit.*, note 2. Section 12.8: Secondary Aluminum Operations, 1995. pp. 12.8-1 to 12.8-7.

15. California Air Resources Board. *Source Emissions Testing of an Aluminum Shredding and Delacquering System*, March and April 1992. Confidential Report No. ERC-8.

16. California Air Resources Board. *Emissions Measurements of a Delacquering Unit for AB2588 Toxics*, September 7, 1991. Confidential Report No. ERC-32.

17. AP-42, 5th ed., *op. cit.*, note 2. Section 12.5: Iron and Steel Production, 1995.

18. AP-42, 5th ed., *op. cit.*, note 2. Section 12.5: Iron and Steel Production, 1995.

19. Monroe, R. W. Steel Founders' Society of America. Des Plaines, Ilinois. Letter to Dennis Beauregard. U.S. EPA, Research Triangle Park, North Carolina. September 30, 1997.

20. Maysilles, J. U.S. Environmental Protection Agency. Memorandum to Dennis Beauregard. U.S. EPA, Research Triangle Park, North Carolina. September 1996

21. U.S. EPA. *Emission Factors for Iron Foundries - Criteria and Toxic Pollutants*. EPA-600/2-90-044. Cincinnati, Ohio: Control Technology Center, Office of Research and Development, 1990.

22. California Air Resources Board. *Source Emissions Testing from an ARC Furnace Baghouse*. Confidential Report No. ERC-60. June 25, 1990.

23. California Air Resources Board. *Source Emissions Testing of a Baghouse to Quantify Foundry Emissions*. Confidential Report No. ERC-59. December 1990.

24. California Air Resources Board. *Source Emissions Testing of a Baghouse to Quantify Foundry Emissions*. Confidential Report No. ERC-59. December 1990.

SECTION 6.0

EMISSIONS OF ARSENIC AND ARSENIC COMPOUNDS FROM THE PULP AND PAPER INDUSTRY

Chemical wood pulping involves the extraction of cellulose from wood by dissolving the lignin that binds the cellulose fibers. Kraft pulping is the major form of chemical wood pulping in the United States, accounting for approximately 85 percent of pulp production,[1] and is expected to continue as the dominant pulping process.[2,3] Semi-chemical and acid sulfite pulping constitute 6 and 4 percent of domestic pulp production, respectively.[1]

Four processes associated with the pulp and paper industry have been identified as potential sources of arsenic emissions: chemical recovery furnaces, smelt dissolving tanks, lime kilns, and power boilers. The following sections focus on the pulp mill thermal chemical recovery processes associated with potential arsenic emissions. Arsenic emissions from wood waste and fossil fuel-fired industrial power boilers are not specific to the pulp and paper industry and are discussed in Sections 4.1.1 and 4.1.2.

6.1 Kraft Recovery Furnaces And Smelt-Dissolving Tanks

6.1.1 Process Description

The kraft pulping process involves the cooking or digesting of wood chips at an elevated temperature (340 to 360(F) and pressure (100 to 135 psig) in white liquor, which is a water solution of sodium sulfide (Na_2S) and sodium hydroxide (NaOH). The lignin that binds the cellulose fibers is chemically dissolved by the white liquor in a tall, vertical digester. This process breaks the wood into soluble lignin and alkali-soluble hemicellulose and insoluble cellulose or pulp. A typical kraft pulping and recovery process is shown in Figure 6-1.[4]

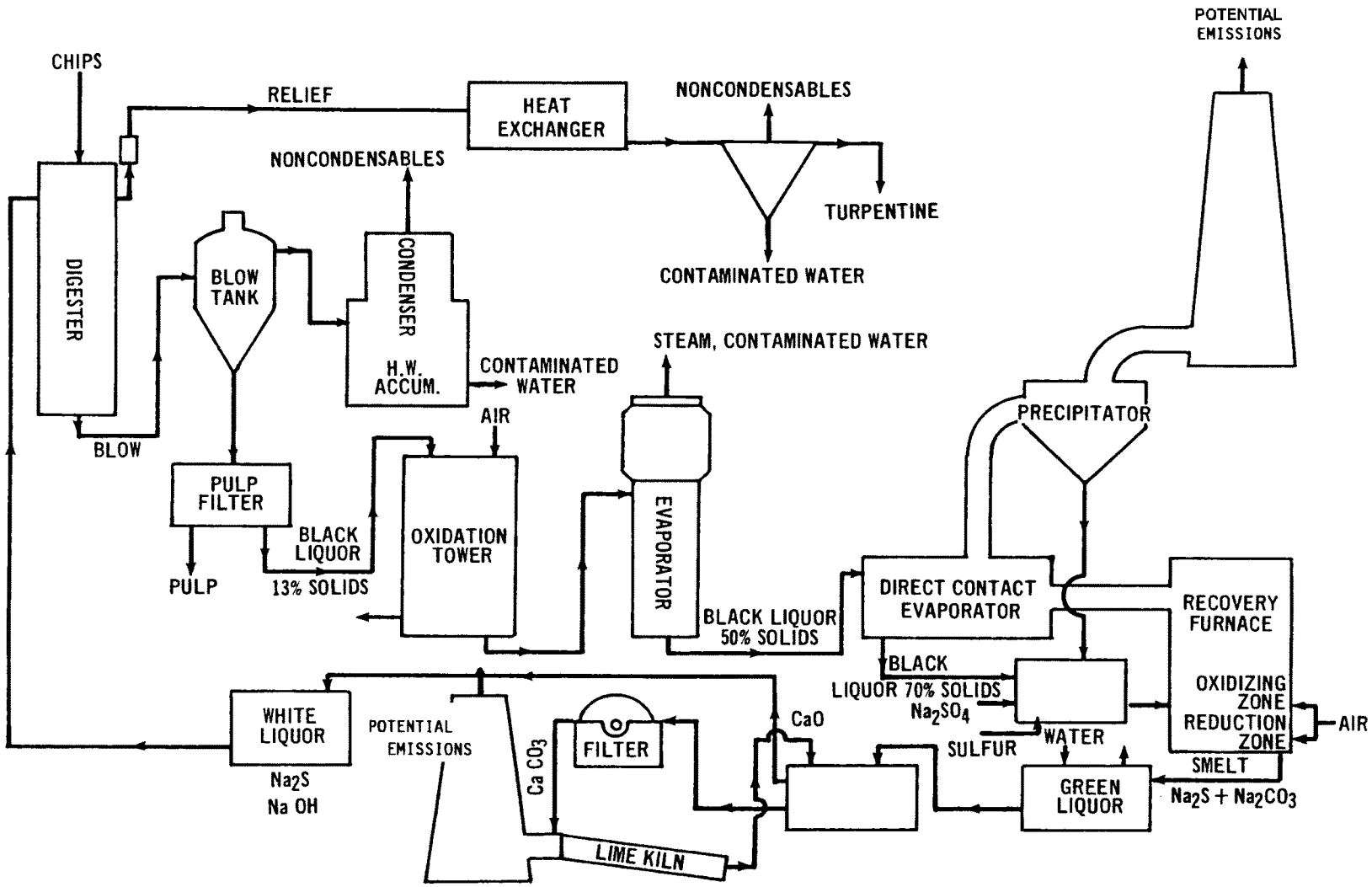

Figure 6-1. Typical Kraft Pulping and Recovery Process

Source: Reference 4.

POM_9411.ds4

Two types of digester systems are used in chemical pulping: batch and continuous. In a batch digester, the contents of the digester are transferred to an atmospheric tank (usually referred to as a blow tank) after cooking is completed (2 to 6 hours). In a continuous digester, wood chips and white liquor continuously enter the system from the top while pulp is continuously withdrawn from the bottom into a blow tank. In both types of digesters, the entire contents of the blow tank are diluted and pumped to a series of brownstock washers, where the spent cooking liquor is separated from the pulp. The pulp, which may then be bleached, is pressed and dried into the finished product.

The balance of the kraft process is designed to recover the cooking chemicals and heat. The diluted spent cooking liquor, or weak black liquor, which is 12 to 18 percent dissolved solids, is extracted from the brownstock washers and concentrated in a multiple-effect evaporator system to about 55-percent solids. The liquor is then further concentrated to 65-percent solids (strong black liquor) in a direct contact evaporator (DCE) or a nondirect contact evaporator (NDCE), depending on the configuration of the recovery furnace in which the liquor is combusted. DCE and NDCE recovery furnace schematics are shown in Figures 6-2 and 6-3, respectively.[5]

In older recovery furnaces, the furnace's hot combustion gases concentrate the black liquor in a DCE prior to combustion. NDCEs include most furnaces built since the early 1970s and modified older furnaces that have incorporated recovery systems that eliminate conventional DCEs. These NDCEs use a concentrator rather than a DCE to concentrate the black liquor prior to combustion. In another type of NDCE system, the multiple-effect evaporator system is extended to replace the direct contact system.

The strong black liquor is sprayed into a recovery furnace with air control to create both reducing and oxidizing zones within the furnace chamber. The combustion of the organics dissolved in the black liquor provides heat for generating process steam and, more importantly, for reducing sodium sulfate (Na_2SO_4) to Na_2S to be reused in the cooking process. Na_2SO_4, which constitutes the bulk of the particulates in the furnace flue gas, is recovered and recycled by an ESP. After combustion, most of the inorganic chemicals present in the black liquor collect as

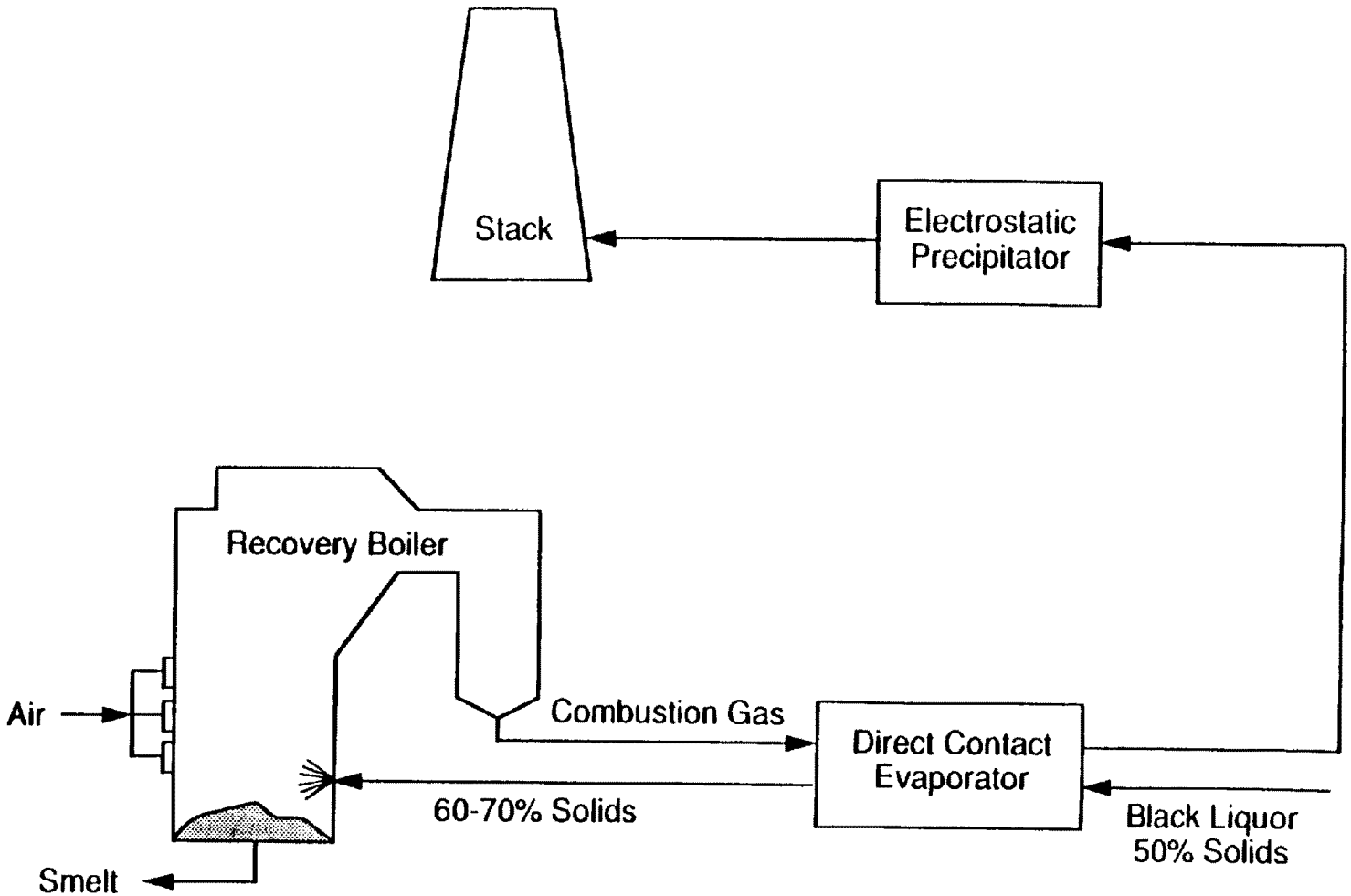

Figure 6-2. Direct Contact Evaporator Recovery Boiler

Source: Reference 5.

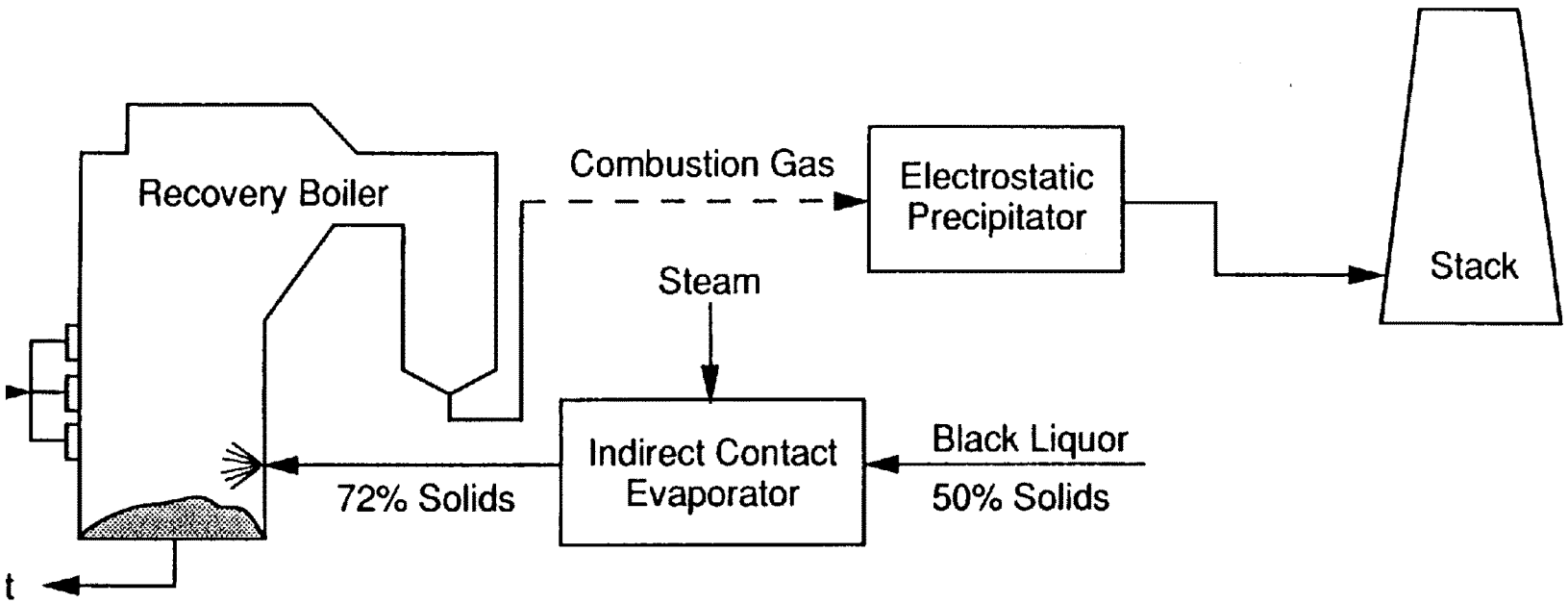

Figure 6-3. Nondirect Contact Evaporator Recovery Boiler

Source: Reference 5.

a molten smelt (containing sodium carbonate [Na_2CO_3] and Na_2S) at the bottom of the furnace, where they are continuously withdrawn into a smelt-dissolving tank. Molten smelt in the smelt-dissolving tank is contacted with mill water or weak wash (the filtrate from lime mud washing) to form green liquor.

In addition to straight kraft process liquor, semi-chemical pulping process spent liquor, known as brown liquor, may also be recovered in kraft recovery furnaces. The semi-chemical pulping process is a combination of chemical and mechanical pulping processes that was developed to produce high-yield chemical pulps. In the semi-chemical process, wood chips are partially digested with cooking chemicals to weaken the bonds between the lignin and the wood. Oversize particles are removed from the softened wood chips and the chips are mechanically reduced to pulp by grinding them in a refiner. The most common type of semi-chemical pulping is referred to as neutral sulfite semi-chemical (NSSC). A major difference between the semi-chemical process and the kraft/sulfite pulping process is that the semi-chemical digestion process is shorter and wood chips are only partially delignified. Some semi-chemical pulp mills are, as of 1997, using chemical recovery.[6] Also, as mentioned above, some mills combine spent liquor from on-site semi-chemical process with spent liquor from adjacent kraft process for chemical recovery.[1]

Particulate emissions from the kraft recovery furnaces consist primarily of Na_2SO_4 and Na_2CO_3, with some sodium chloride. Particulate emissions also contain arsenic, but only in minute quantities because arsenic is found as a contaminant in process chemicals and in trace amounts in wood. Particulate control and, therefore, arsenic control on recovery furnaces is achieved with ESPs, including both wet- and dry-bottom and, to a lesser extent, with scrubbers. Further particulate control is necessary for DCEs equipped with either a cyclonic scrubber or a cascade evaporator because these devices are generally only 20- to 50-percent efficient for particulates.[4] Most often in these cases, an ESP is employed after the DCE for an overall particulate control efficiency range of 85 percent to more than 99 percent. At existing mills, auxiliary scrubbers may be added to supplement older and less efficient primary particulate control devices. No specific data were available in the literature documenting lead control efficiencies for ESPs and scrubbers on kraft black liquor recovery furnaces.

6.1.2 Emission Factors

Emission factors for arsenic from kraft recovery furnaces were developed from data provided by the National Council for Air and Stream Improvement (NCASI), an industry environmental research organization.[7,8] Kraft furnace/control configurations represented included a DCE recovery furnace equipped with an ESP and scrubber in series, a DCE recovery furnace equipped with only an ESP, an NDCE recovery furnace equipped with an ESP and scrubber in series, and an NDCE recovery furnace equipped with only an ESP. Emissions data were also provided for smelt-dissolving tanks (3). Arsenic emission factors for kraft black liquor recovery furnaces and smelt-dissolving tanks are presented in Table 6-1.

6.1.3 Source Locations

The distribution of kraft pulp mills in the United States in 1997 is shown in Table 6-2.[6] Kraft pulp mills are located primarily in the southeast, whose forests provide over 60 percent of U.S. pulpwood.[1]

6.2 Lime Kilns

6.2.1 Process Description

In the kraft process, green liquor from the smelt-dissolving tanks is clarified and reacted with burnt lime (CaO) in a lime slaker. Following a series of causticizing vessels, the resultant white liquor is clarified to yield Na_2S + NaOH (aqueous white liquor) and lime mud or calcium carbonate ($CaCO_3$). The white liquor is recycled to the digestion process and the lime mud is calcined in a lime kiln to regenerate CaO.[5]

A lime kiln is a countercurrent, inclined tube process heater designed to convert lime mud ($CaCO_3$) to CaO for reuse in the causticizing of kraft liquor. A process flow diagram for a lime kiln is shown in Figure 6-4. The rotary kiln is the most common lime kiln design used in the kraft pulp and paper industry. Rotary lime kilns range from 8 to 13 feet in diameter, and from

6#$.'ffi↑☼!┤ffiffi#45'0+%ffi'/+55+10ffi(#%6145ffi(14ffi-4#(6ffi241%'55ffi4'%18'4;ffi(740#%'5ffi#0&ffi
5/'.6ffi&+551.8+0)ffi6#0-5

5%%0WODGT	'OKUUKOP5RWTEG	%QPVTQNXKEG	#XGTCIGOKUUKOPEVQT KPND◄/VQP$.5 C	'OKUUKOPEVQT 4CVKPI
┤☼↕☼↕!!☼┤	&KTGE%QPVCEXCRQTCVQTCHV4GEQXGT[(WTPCEG	'52	┤	&
┤☼↕☼↕!!☼!!↕	0QPFKTGEXQPVCEXCRQTCVQTCHV 4GEQXGT[WTPCEG	'52♫'52 CPF9GV5ETWDDGT	!!┤┤	&
┤☼↕☼↕!!☼┤	5OGN&KUUQNXKPCPM	&GOKUVGT	┤┤Z!!↕	&

5QWTEG4GHGTGPEGCLPF┤

C 'OKUUKOHPCEVQTCTGKPNDQHRQNNWVCPOKVVGRGTOKNNKOPQHDNCEMKSWQTQNKFU$.5♂ DWTPGF6QEQPXGTVQMIRGTOKNNKOPGVGKEQPUMI◄/VQPP OWNVKRN[[↕┤┤↕┤

☼ '52 'NGEVTQUVC2TGEKRKVCVQT┤

6#$.'ffi↑☼¶╫ffiffi&+564+$76+10ffi1(ffi-4#(6ffi27.2ffi/+..5ffi+0ffi6*'ffi70+6'&ffi56#6'5ffi‼←←├♂

5VCVG	0WODGQT/KNNU
#NCDCOC	‼╥
#TK\QPC	‼
#TMCPUCU	├
%CNKHQTPKC	¶
(NQTKFC	├
)GQTIKC	‼¶
+FCJQ	‼
-GPVWEM[	¶
.QWKUKCPC	‼↕
/CKPG	├
/CT[NCPF	‼
/KEJKICP	⊥
/KPPGUQVC	¶
/KUUKUUKRRK	↑
/QPVCPC	‼
0GY*CORUJKTG	‼
0GY;QTM	‼
0QTVJ%CTQNKPC	↑
1JKQ	‼
1MNCJQOC	‼
1TGIQP	├
2GPPU[NXCPKC	⊥
5QWV%CTQNKPC	↑
6GPPGUUGG	¶
6GZCU	↑
8KTIKPKC	┬
9CUJKPIVQP	↑
9KUEQPUKP	┬
6QVCN	‼¶╥

Source: Reference 6.

↑☼←

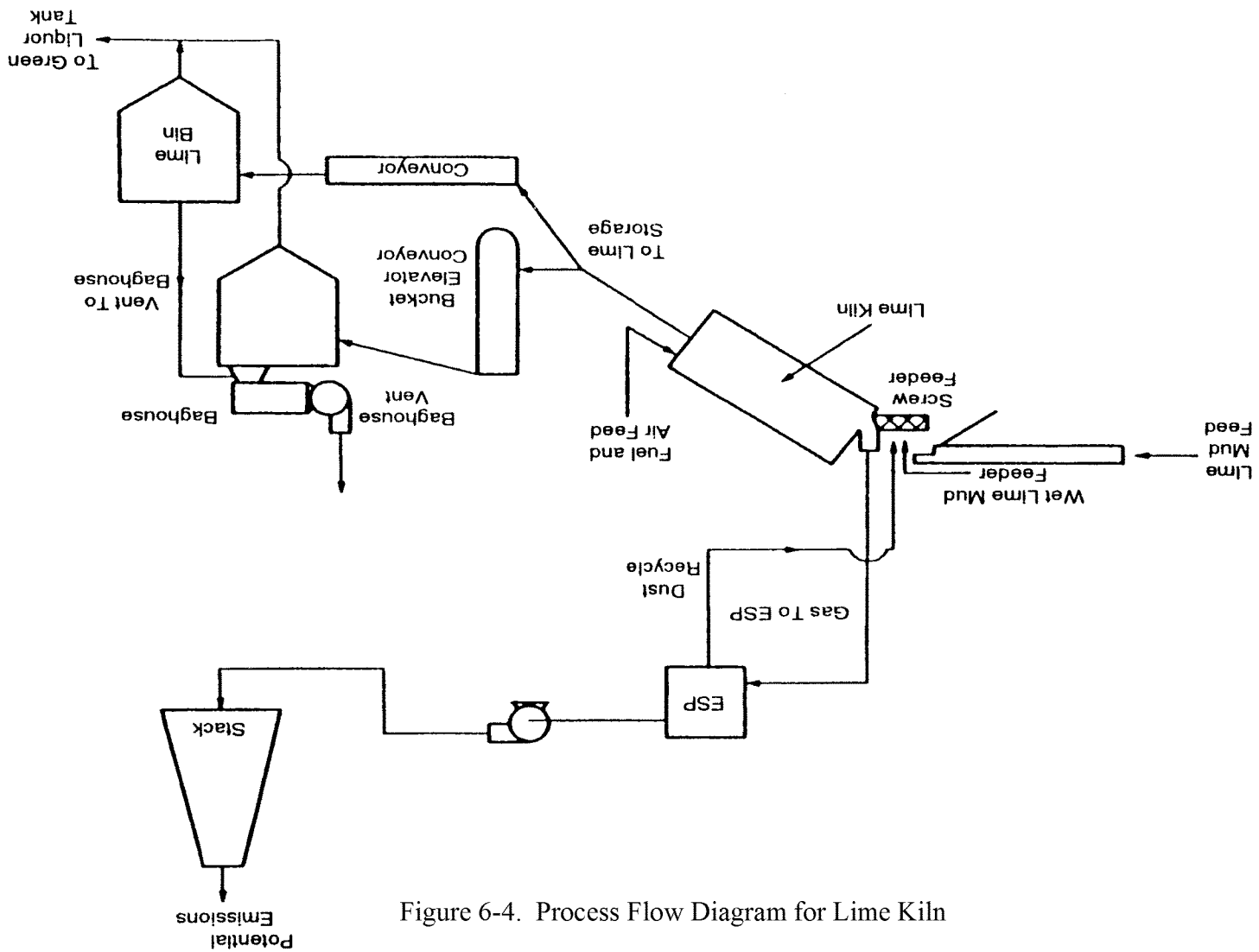

Figure 6-4. Process Flow Diagram for Lime Kiln

Source: Reference 5.

100 to 400 feet in length. Lime kilns predominantly fire natural gas, with some units firing distillate and/or residual fuel oil. Many facilities incinerate non-condensible gases (NCG) from pulping source vents in lime kilns to control total reduced sulfur (TRS) emissions. Temperatures in the kiln can range from 300 to 500(F at the upper or wet end to 2,200 to 2,400(F at the hottest part of the calcination zone near the lower or dry end.[5,9]

Emissions of concern from lime kilns include PM, largely in the form of calcium salts. Some of the PM also contains arsenic. Emissions of arsenic from lime kilns are likely due to the arsenic content of the lime mud with some contribution from the combustion of fossil fuel (natural gas or fuel oil). The most common PM control technologies used on lime kilns are scrubbers (some ESPs are also used). Scrubbers on lime kilns use either fresh water or clean condensates from pulping sources as a scrubbing medium. Small amounts of caustic solution may be added to the scrubbing solution to scrub TRS & SO_2. Lime kiln scrubber designs include impingement, venturi, and cyclonic scrubbers.[10]

6.2.2 Emission Factors

Arsenic emission factors for uncontrolled and scrubber-controlled lime kilns are presented in Table 6-3.[6,7,11]

6.2.3 Source Locations

Lime kilns are primarily located at kraft process pulp mills. See Table 6-2 in Section 6.1 for kraft pulp mill source locations reported in 1997.

6.3 Sulfite Recovery Furnaces

6.3.1 Process Description

Although not as commonplace, the acid sulfite pulp production process is similar to the kraft process except that different chemicals are used for cooking. Sulfurous acid is used in place

5%% 0WODGT	'OKUUKOP 5RQWTEG	%QPVTQN &GXKEG	#XGTCIG OKUUKOP KPND◄/VQP$.5[C]	'OKUUKOP (CEVQT CVKPI	4GHGTGPEG
┼☼│☼↕!!☼↑	.KOG-KNP	0QPG	┼┼↑→Z!!↕☼┼ [D]	7	!!!!
		5ETWDDGT	!!┼┼	&	♭♫→

[C] 'OKUUKOP HCEVQT UPNDRGT OKNNKOP RQHDNCEN KSWOT NKHG PGTCVGT VJGOKNN 6QEQPXGT TQMI RGT OKNNKO OGVTKZ EQPUMI◄/VQPPG ♂ OWNVKRD [↕┼┼

[D] 'OKUUKOP HCEVQT UPNDRGT CKTFT[VQPQHRWNR TQFWEGF┼

of a caustic solution to dissolve wood lignin. To buffer the cooking solution, a bisulfite of sodium, magnesium, calcium, or ammonium is used. Digestion occurs under high temperature and pressure, as in the kraft process, in either batch mode or continuous digesters. Following digestion and discharge of the pulp into an atmospheric blow pit or dump tank, the spent sulfite liquor, known as red liquor, may be treated and discarded, incinerated, or sent through a recovery process for recovery of heat and chemicals. Additionally, chemicals can be recovered from gaseous streams such as those from red stock washers. The cost of the soluble bases, with the exception of calcium, makes chemical recovery economically feasible.[1,5] A simplified process schematic of magnesium-based sulfite pulping and chemical recovery is shown in Figure 6-5.

Chemical recovery in the sulfite process involves the concentration of weak red liquor in multiple effect evaporators and DCEs to strong red liquor (55 to 60 percent solids). This liquor is sprayed into a furnace and burned, producing steam for mill processes. When magnesium-based liquor is burned, magnesium oxide is recovered from the flue gas in a multicyclone. The collected magnesium oxide is then water-slaked and used as circulation liquor in a series of venturi scrubbers designed to absorb SO_2 from the flue gas to form bisulfite solution for use in the cook cycle.

Several processes for chemical recovery from sodium-base liquor are based upon the combustion of concentrated liquor in a kraft-type recovery furnace. The resultant smelt is similar in composition to that produced by combustion of kraft liquor. The commercial approaches to convert sodium-base smelt chemicals into regenerated cooking liquor include Sivola-Lurgi,

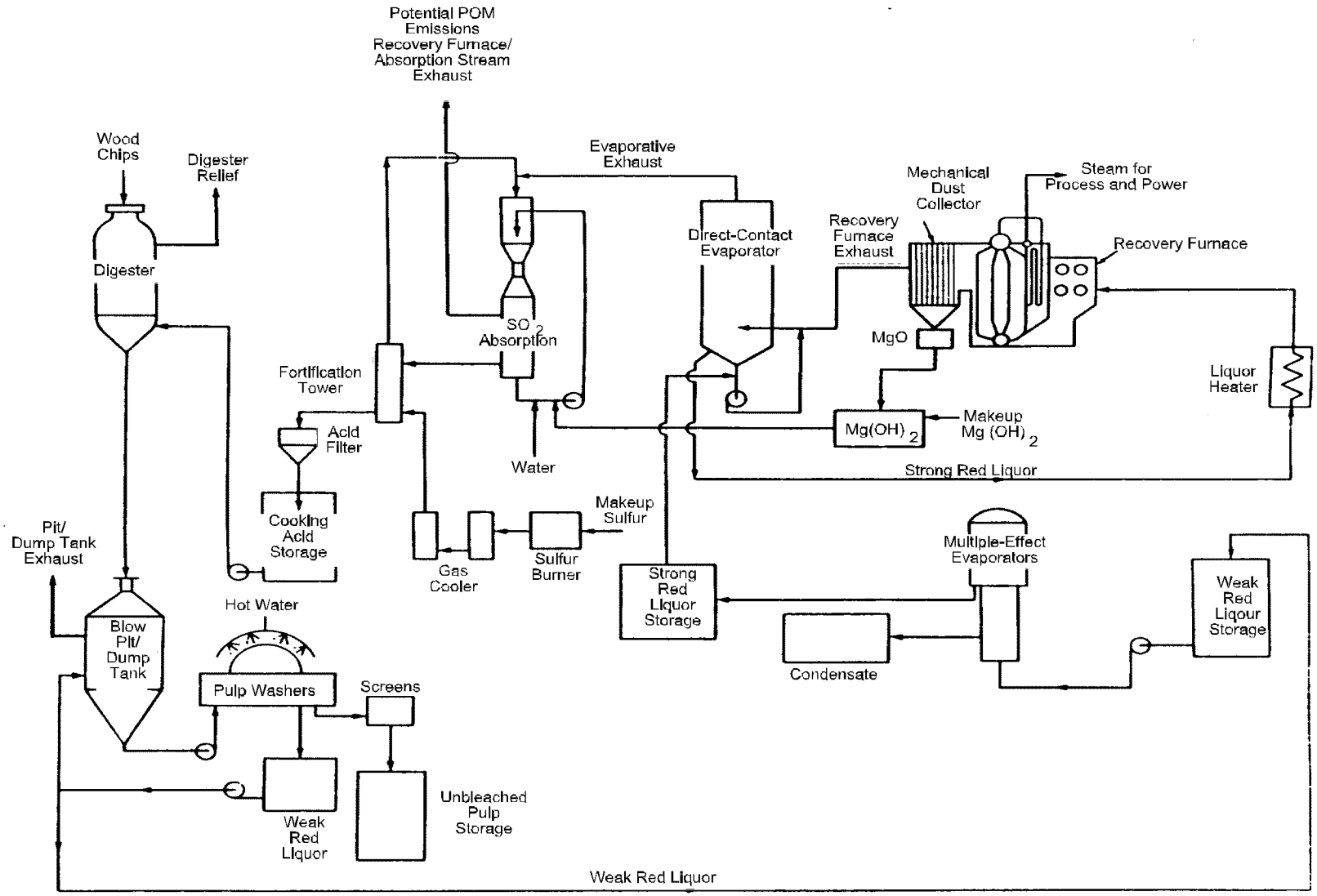

Figure 6-5. Process Diagram for Magnesium-Based Sulfite Pulping and Chemical Recovery

Source: Reference 4.

Tampella, Storm, Mead, and Rayonier.[12] Sulfite mills that do not practice chemical recovery require an acid plant to fulfill total sulfite demand. This is accomplished by rotary or spray sulfur burners equipped with heat exchangers and SO_2-absorbing scrubbers.

6.3.2 Emission Factors

As with the kraft process, arsenic exists only as a contaminant in process chemicals and in trace amounts in wood, and is, therefore, released in minute quantities. Only one emission factor was available in the literature for arsenic from an uncontrolled sulfite recovery furnace. The arsenic emission factor is presented in Table 6-4.[7,8]

6.3.3 Source Locations

Sulfite recovery furnaces are located at sulfite process pulp mills. Table 6-5 shows the distribution of sulfite pulp mills in the United States in 1997.[1]

6#$.'ffi↑☼┤ffiffi#45'0+%ffi'/+55+10ffi(#%6145ffi(14ffi57.(+6'ffi241%'55
4'%18'4;ffi(740#%'5

SCC Number	Emission Source	Control Device	Average Emission Factor in lb/MMton RLS[a]	Emission Factor Rating
3-07-002-22	Sulfite Recovery Furnace	None	3.4	D

Source: References 7 and 8.

[a] Emission factors in lb pollutant per million ton of red liquor solid burned. To convert to kg per million metric tons (kg/MMtonne) multiply by 0.5.

6#$.'ffi↑☼┤ffiffi&+564+$76+10ffi1(ffi57.(+6'ffi27.2ffi/+..5ffi+0ffi6*'ffi70+6'&
ffi56#6'5ffi‼←←├♂

5VCVG	0WVODGTffiQHffi/KNNU
#NCUMC	‼
(NQTKFC	‼
/CKPG	‼
0GYffi;QTM	‼
2GPPU[NXCPKC	‼
9CUUKPIVQP	┤
9KUEQPUKP	┬
6QVCN	‼┬

5QWTEG4GHGTGPEG

↑☼‼┤

References for Section 6.0

1. U.S. EPA. *Pulp, Paper, and Paperboard Industry--Background Information for Proposed Air Emission Standards: Manufacturing Processes at Kraft, Sulfite, Soda, and Semi-Chemical Mills*. EPA-453/R-93-050a. Research Triangle Park, North Carolina: U.S. Environmental Protection Agency, Office of Air Quality Planning and Standards, Emission Standards Division, October 1993. pp. 2-1 to 2-22.

2. Air and Waste Management Association. *Air Pollution Engineering Manual*. Chapter 18: Wood Processing Industry. New York, New York: Van Nostrand Reinhold, 1992.

3. Dyer, H., S. Gajita, and M. Fennessey. *1992 Lockwood-Post's Directory of the Pulp, Paper and Allied Trades*. San Francisco, California: Miller Freeman Publications, 1991.

4. U.S. EPA. *Compilation of Air Pollutant Emission Factors*, 5th ed. (AP-42), Vol. I: Stationary Point and Area Sources, Section 10.2: Chemical Wood Pulping. Research Triangle Park, North Carolina: U.S. Environmental Protection Agency, Office of Air Quality Planning and Standards, 1995.

5. Radian Corporation. Pulp and Paper Industry Training Session Notes. Research Triangle Park, North Carolina: Radian Corporation, 1993.

6. Dyer, H., S. Gajita, and M. Fennessey. *1997 Lockwood-Post's Directory of the Pulp, Paper and Allied Trades*. San Francisco, California: Miller Freeman Publications, 1997.

7. Someshwar, A. (NCASI, Gainesville, Florida). Memorandum to Dennis Beauregard (U.S. Environmental Protection Agency, Research Triangle Park, North Carolina) concerning air toxics emissions data for sources at chemical wood pulp mills. March 15, 1996.

8. Someshwar, A. (NCASI, Gainesville, Florida). Memorandum to Jack Johnson (Radian International, LLC, Research Triangle Park, North Carolina) concerning emissions data for sources at chemical wood pulp mills. May 15, 1996.

9. U.S. EPA. *Environmental Pollution Control-Pulp and Paper Industry*, Part 1: Air. EPA-625/7-76-001. Research Triangle Park, North Carolina: U.S. Environmental Protection Agency, Emission Standards Division, October 1976. pp. 11-1 to 11.11.

10. NCASI. *Compilation of Air Toxic Emission Data for Boilers, Pulp Mills, and Bleach Plants*, Technical Bulletin No. 650. New York, New York: National Council of the Paper Industry for Air and Stream Improvement, June 1993.

11. ECOSERVE. *Pooled Air Toxics Source Test Program for Kraft Pulp Mills*, Report No. 2, Simpson Paper Company, Anderson, California. Report No. 1249A. ECOSERVE, Inc., Environmental Services, November 27, 1990.

12. Smook, G.A. *Handbook for Pulp and Paper Technologists*. Atlanta, Georgia: TAPPI, 1989. pp. 148-150.

SECTION 7.0
EMISSIONS OF ARSENIC AND ARSENIC COMPOUNDS FROM OTHER SOURCES

This section provides an overview of the miscellaneous sources of arsenic emissions. These sources can be divided into the following categories: Glass Manufacturing; Municipal Solid Waste Landfills; Asphalt Concrete Production; Abrasive Grain Processing; Prepared Feeds Manufacturing; Portland Cement Production; Open Burning of Scrap Tires; Grain Milling; Process Heaters; and Cotton Production and Ginning. Section 7.0 accounts for the smaller producers of arsenic emissions. Processes and associated emissions are provided, where known. Often, these sources are incomplete, therefore the reader should contact sources of interest to verify the process and control techniques employed prior to applying any emission factor presented in this section.

The reader should also note that TRI data indicate that arsenic is potentially emitted from facilities within the categories listed in Table 7-1;[1] however, specific emissions data are lacking and current literature does not indicate the origins of these emissions. Therefore, further discussion of these sources is not included in this section.

7.1 Glass Manufacturing

Commercially produced glass is classified as soda-lime, lead, fused silica, borosilicate, or 96 percent silica. Four basic operations are performed in all glass manufacturing facilities: (1) preparation of raw material, (2) melting in a furnace, (3) forming, and (4) finishing.[2]

The products of the industry are flat glass (SIC 3211), container glass (SIC 3221), pressed and blown glass (SIC 3229) and wool fiberglass (SIC 3296). The operations for glass

TABLE 7-1. OTHER SOURCES OF ARSENIC EMISSIONS

Source Category	Number of Sources Reported in TRI
Pharmaceutical preparations manufacturing	2
Electrometallurgical products manufacturing	1
Storage batteries manufacturing	2
Sawmills and planing mills, general	2
Petroleum refining	2
Small arms munitions manufacturing	2
Plating and polishing	1
Nonferrous rolling and drawing	1
Medicinals and botanicals manufacturing	1
Copper rolling and drawing	1
Other biological incineration	1,700

5QWTEG4GHGTGPEG

manufacturing are generally the same for all products except for forming, finishing and post processing.[3]

7.1.1 Process Description

Raw materials including silica sand, limestone, soda ash and minor ingredients are received and stored at a production facility called a batch plant. The raw materials are then transferred to a weigher and mixed for a set period of time. Cullet (recycled glass) is added to assist in the melting process. The mixture (batch) is conveyed to a batch storage bin where it is held until fed into the melting furnace on a demand basis.[3]

Next, these raw materials are melted in a glass melting furnace to form a homogenous liquid at approximately 2,800(F. The continuous furnaces are charged continuously or intermittently by means of automatic or manual feeders. The glass furnaces are generally of the regenerative or recuperative type fired by gas or oil with electric boosting for additional heating

and control. Production of certain low viscosity glasses such as crystal which require special production techniques may be carried out in day tanks. The melted glass is held at the molten state until it reaches a desired red state of homogeneity and is then cooled to about 2,200(F or less for delivery to the forming stage of the process.[3]

Finally, the molten material is drawn from the furnace and worked on forming machines by a variety of methods, including pressing, blowing, drawing, or rolling to produce the desired product.

The end product undergoes finishing (decorating or coating) and annealing (removing unwanted stress areas in the glass). Any damaged or undesirable glass is transferred back to the batch plant to be used as cullet.

7.1.2 Emission Control Techniques

Baghouses, venturi scrubbers, and ESPs are currently used in the various processes associated with the glass manufacturing industry. Therefore, an overall control efficiency of at least 90 percent is expected and should be applied to emissions estimated using the factor in Table 7-2.[4]

7.1.3 Emissions

Air emissions from glass manufacturing occur in three areas: raw material blending and transport, melting, and forming and finishing. Fugitive dust is produced by the blending and transport process. In most cases, fabric filters are used on silos and the transport system to confine the particulate emissions. Arsenic emissions from the raw material preparation and forming and finishing operations are generally considered to be negligible.

The glass melting furnace is the principal source of arsenic emissions from a glass plant. The composition and rate of emissions from glass melting furnaces vary considerably, depending

TABLE 7-2. ARSENIC EMISSION FACTOR FOR GLASS MANUFACTURING

SCC Number	Emission Source	Control Device	Average Emission Factor in lb/ton[a]	Emission Factor Rating
3-05-014	Regenerative-type Furnaces	None	5.00×10^{-1}	U

5QWTEG4GHGTGPEG
C6QEQPXGTWQMI RGTOGVTKVEQP MI◀VQPPGOWNVKRDN[[

upon the composition of glass being produced and, to a lesser extent, upon the design and operating characteristics of the furnace. Emissions consist primarily of products of combustion and entrained PM. One emission factor for uncontrolled arsenic emission from glass manufacturing was found and is presented in Table 7-2. Additional sources of information include Glass Manufacturing Plants - Background information for Proposed Standards (EPA-450/3-79-005a), Summary Report on Emissions from the Glass Manufacturing Industry (EPA-600/2-79-101), and The Handbook of Glass Manufacture, 3rd Edition Volume II.

7.2 Municipal Solid Waste Landfills

A municipal solid waste (MSW) landfill unit is a discrete area of land or an excavation that receives household waste, but is not a land application unit (i.e., for receiving sewage sludge). An MSW landfill unit may also receive other types of wastes, such as commercial solid waste, nonhazardous sludge, and industrial solid waste. Arsenic emissions from MSW landfills are expected to originate from the non-household sources of MSW.

7.2.1 Process Description

There are three major designs for municipal landfills: the area method, the trench method, and the ramp method.[5] They all utilize a three-step process, which includes spreading the waste, compacting the waste, and covering the waste with soil. The area fill method involves placing waste on the ground surface or landfill liner, spreading it in layers, and compacting it with heavy equipment. A daily soil cover is spread over the compacted waste. The trench method entails excavating trenches designed to receive a day's worth of waste. The soil from the

excavation is often used for cover material and wind breaks. The ramp method is typically employed on sloping land, where waste is spread and compacted in a manner similar to the area method; however, the cover material obtained is generally from the front of the working face of the filling operation. The trench and ramp methods are not commonly used, and are not the preferred methods when liners and leachate collection systems are utilized or required by law.

Modern landfill design often incorporates liners constructed of soil (e.g., recompacted clay) or synthetics (e.g., high density polyethylene) or both to provide an impermeable barrier to leachate (i.e., water that has passed through the landfill) and gas migration from the landfill.

7.2.2 Emission Control Techniques

Landfill gas collection systems are either active or passive systems. Active collection systems provide a pressure gradient in order to extract landfill gas by use of mechanical blowers or compressors. Passive systems allow the natural pressure gradient created by the increase in landfill pressure from landfill gas generation to mobilize the gas for collection.

Landfill gas control and treatment options include (1) combustion of the landfill gas, and (2) purification of the landfill gas. Combustion techniques include techniques that do not recover energy (e.g., flares and thermal incinerators) and techniques that recover energy and generate electricity from the combustion of the landfill gas (e.g., gas turbines and internal combustion engines). Boilers can also be employed to recover energy from landfill gas in the form of steam. Flares involve an open combustion process that requires oxygen for combustion; the flares can be open or enclosed. Thermal incinerators heat an organic chemical to a high enough temperature in the presence of sufficient oxygen to oxidize the chemical to CO_2 and water. Purification techniques can also be used to process raw landfill gas to pipeline quality natural gas by using adsorption, absorption, and membranes.[5]

7.2.3 Emission Factors

During the development of this document, only one test report was acquired that summarized arsenic emissions from a landfill equipped with waste gas flares. An emission factor developed from these data is presented in Table 7-3.[6]

7.2.4 Source Locations

MSW management in the United States is dominated by disposal in landfills. Approximately 67 percent of solid waste is landfilled, 16 percent is incinerated, and 17 percent is recycled or composted. There were an estimated 5,345 active MSW landfills in the United States in 1992. In 1990, active landfills were receiving an estimated 130 million tons of waste annually, with 55 to 60 percent reported as household waste and 35 to 45 percent reported as commercial waste.[5]

7.3 Asphalt Concrete

7.3.1 Process Description

To produce hot-mix asphalt (also referred to as asphalt concrete), aggregate, which is composed of gravel, sand, and mineral filler, is heated to eliminate moisture and then mixed with hot asphalt cement. The resulting hot mixture is pliable and can be compacted and smoothed. When it cools and hardens, hot-mix asphalt provides a waterproof and durable pavement for roads, driveways, parking lots, and runways.

There are three types of hot-mix asphalt plants operating in the United States: batch-mix, continuous-mix, and drum-mix. Batch-mix and continuous-mix plants separate the aggregate drying process from the mixing of aggregate with asphalt cement. Drum-mix plants combine these two processes. Production capacities for all three types of plants range from 40 to 600 tons

6#$.'ffi ffiffi#45'0+%ffi'/+55+10ffi(#%614ffi(14ffi.#0&(+..ffi241%'55ffi)#5

5%%0WODGT	'OKUUKOPQWTEG	%QPVTQNXKEG	#XGTCIGOKUUKQPEVQT KPND◀/$VW	'OKUUKQPEVQTCPIG KPND◀/$VW	'OKUUKQPEVQT 4CVKPI
⁞⁞⁞⁞⁞⁞←	2TQEGUUU .CPFHKNNU	0QPG	┼┼Z⁞⁞	┼⁞⁞Z⁞⁞ ☼ ┼┼Z⁞⁞	7

5QWTEG4GHGTGPEG

C 'OKUUKQPCEVQTUGZRTGUUKPNDQHRQNNWVCPVKVVGRGT/$VWQHJGCVKPRWV6QEQPXGTVQMI RGTGIC ,QWNGMI◀,♂♂ OWNVKRD[[┼┼

of hot mix per hour. Almost all plants in operation are of either the batch-mix or drum-mix type. Less than 0.5 percent of operating hot-mix plants are of the continuous-mix design.[7]

Aggregate, the basic raw material of hot-mix asphalt, consists of any hard, inert mineral material. Aggregate typically comprises between 90 and 95 percent by weight of the asphalt mixture. Because aggregate provides most of the load-bearing properties of a pavement, the performance of the pavement depends on selection of the proper aggregate.

Asphalt cement is used as the binding agent for aggregate. It prevents moisture from penetrating the aggregate and acts as a cushioning agent. Typically, asphalt cement constitutes 4 to 6 percent by weight of a hot-mix asphalt mixture.[8] Asphalt cement is obtained from the distillation of crude oil. It is classified into grades under one of three systems. The most commonly used system classifies asphalt cement based on its viscosity at 140(F (60(C). The more viscous the asphalt cement, the higher its numerical rating.

The asphalt cement grade selected for different hot-mix asphalts depends on the type of pavement, climate, and type and amount of traffic expected. Generally, asphalt pavement bearing heavy traffic in warm climates requires a harder asphalt cement than pavement subject to either light traffic or cold climate conditions.

Another material used to a greater extent in the production of new or virgin hot-mix asphalt is recycled asphalt pavement (RAP), which is pavement material that has been removed from existing roadways. RAP is now used by virtually all companies in their hot-mix asphalt mixtures. The Surface Transportation Assistance Act of 1982 encourages recycling by providing a 5-percent increase in Federal funds to State agencies that recycle asphalt pavement. Rarely does the RAP comprise more than 60 percent by weight of the new asphalt mixture. Twenty-five percent RAP is typical in batch plants, and 40 to 50 percent RAP mixtures are typical in drum-mix plants.[8]

The primary processes of a typical batch-mix hot-mix asphalt facility are illustrated in Figure 7-1.[7] The moisture content of the stockpiled aggregate at the plant usually ranges from

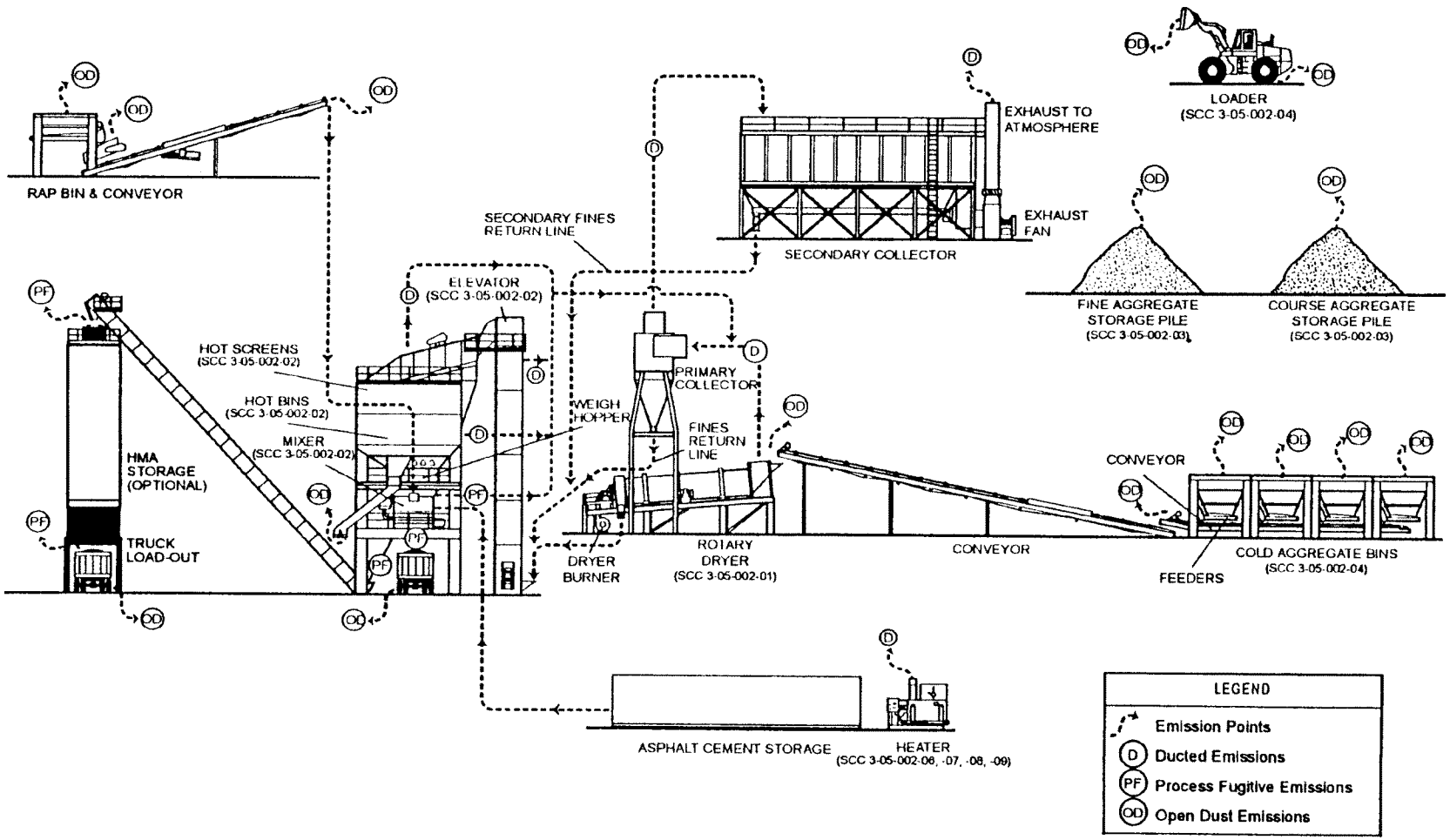

Figure 7-1. General Process Flow Diagram for Batch-Mix Asphalt Paving Plants

Source: Reference 7.

3 to 5 percent. The moisture content of recycled hot-mix asphalt typically ranges from 2 to 3 percent. The different sizes of aggregate are typically transported by front-end loader to separate cold-feed bins and metered onto a feeder conveyor belt through gates at the bottom of the bins. The aggregate is screened before it is fed to the dryer to keep oversize material out of the mix.

The screened aggregate is then fed to a rotating dryer with a burner at its lower (discharge) end that is fired with fuel oil, natural gas, or propane. In the production of hot-mix asphalt, the majority of arsenic emissions can be expected from the rotating dryer. The dryer removes moisture from the aggregate and heats the aggregate to the proper mix temperature. Arsenic emissions occur primarily from fuel combustion. Aggregate temperature at the discharge end of the dryer is about 300(F. The amount of aggregate that a dryer can heat depends on the size of the drum, the size of the burner, and the moisture content of the aggregate. As the amount of moisture to be removed from the aggregate increases, the effective production capacity of the dryer decreases.

Vibrating screens segregate the heated aggregate into bins according to size. A weigh hopper meters the desired amount of the various sizes of aggregate into a pugmill mixer. The pugmill typically mixes the aggregate for 15 seconds before hot asphalt cement from a heated tank is sprayed into the pugmill. The pugmill thoroughly mixes the aggregate and hot asphalt cement for 25 to 60 seconds. The finished hot-mix asphalt is either loaded directly into trucks or held in insulated and/or heated storage silos. Depending on the production specifications, the temperature of the hot-mix asphalt product mix can range from 225 to 350(F at the end of the production process.

Continuous-mix plants are very similar in configuration to batch plants. Asphalt cement is continuously added to the aggregate at the inlet of the mixer. The aggregate and asphalt cement are mixed by the action of rotating paddles while being conveyed through the mixer. An adjustable dam at the outlet end of the mixer regulates the mixing time and also provides some surge capacity. The finished mix is transported by a conveyor belt to either a storage silo or surge bin.[8]

Drum-mix plants dry the aggregate and mix it with the asphalt cement in the same drum, eliminating the need for the extra conveyor belt, hot bins and screens, weigh hopper, and pugmill of batch-mix plants. The drum of a drum-mix plant is much like the dryer of a batch plant, but it typically has more flights than do batch dryers to increase veiling of the aggregate and to improve overall heat transfer. The burner in a drum-mix plant emits a much bushier flame than does the burner in a batch plant. The bushier flame is designed to provide earlier and greater exposure of the virgin aggregate to the heat of the flame. This design also protects the asphalt cement, which is injected away from the direct heat of the flame.[8]

Initially, drum-mix plants were designed to be parallel-flow, as depicted in Figure 7-2. Recently, the counterflow drum-mix plant design shown in Figure 7-3 has become popular.[7] The parallel flow drum-mix process is a continuous mixing type process using proportioning cold feed controls for the process materials. Aggregate, which has been proportioned by gradations, is introduced to the drum at the burner end. As the drum rotates, the aggregates and the combustion products move toward the other end of the drum in parallel. Liquid asphalt cement flow is controlled by a variable flow pump that is electronically linked to the virgin aggregate and RAP weigh scales. The asphalt cement is introduced in the mixing zone midway down the drum in a lower temperature zone along with any RAP and PM from collectors. The mixture is discharged at the end of the drum and conveyed to a surge bin or storage silos. The exhaust gases also exit the end of the drum and pass on to the collection system.[7]

In a counterflow drum-mix plant, the material flow in the drum is opposite or counterflow to the direction of the exhaust gases. In addition, the liquid asphalt cement mixing zone is located behind the burner flame zone so as to remove the materials from direct contact with hot exhaust gases. Liquid asphalt cement flow is still controlled by a variable flow pump and is injected into the mixing zone along with any RAP and PM from primary and secondary collectors.[7]

Of the 3,600 active hot-mix asphalt plants in the United States, approximately 2,300 are batch-mix plants, 1,000 are parallel-flow drum-mix plants, and 300 are counterflow drum-mix plants. About 85 percent of plants being constructed today are of the counterflow drum-mix

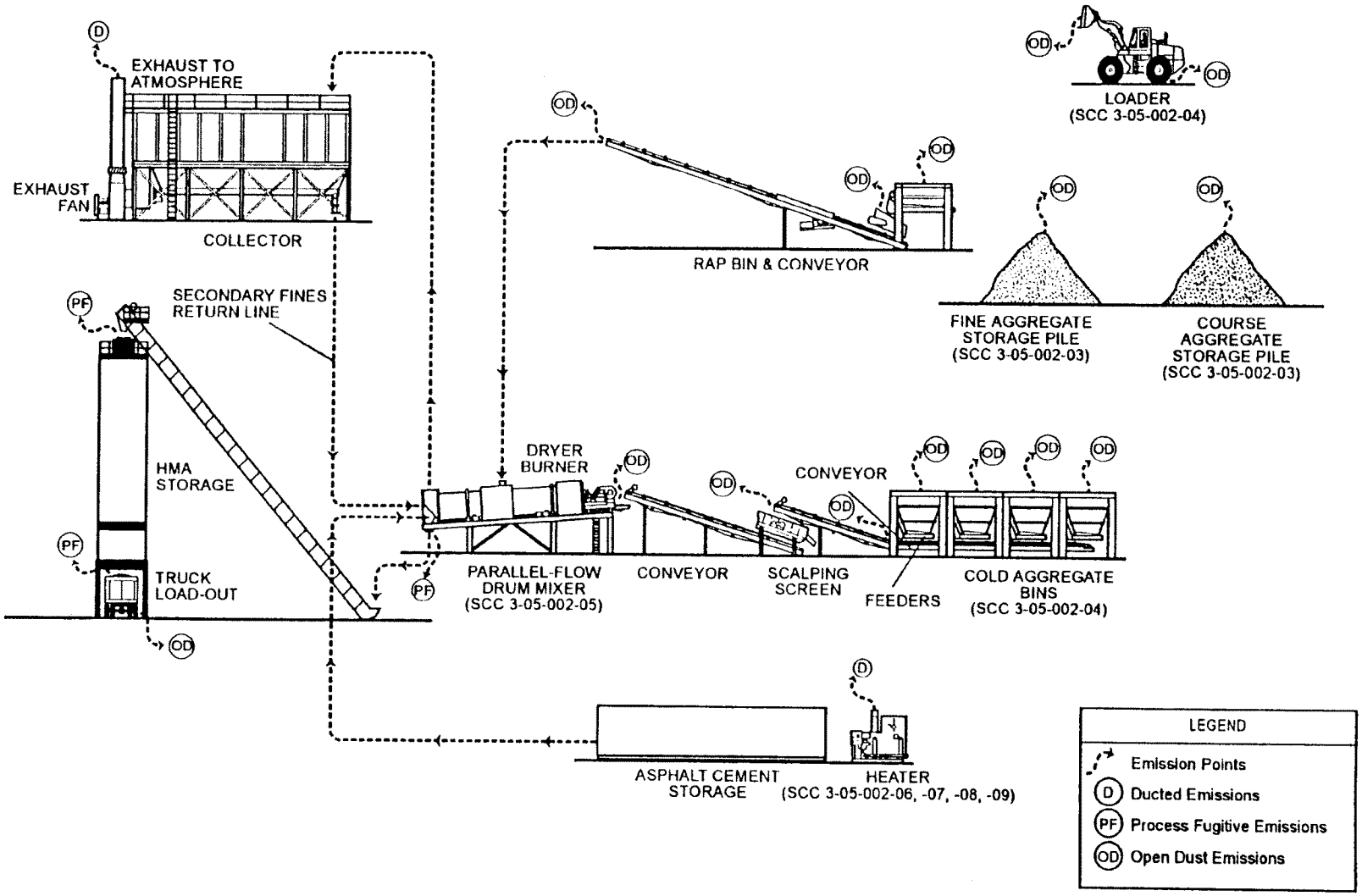

Figure 7-2. General Process Flow Diagram for Drum-Mix Asphalt Paving Plants

Source: Reference 7.

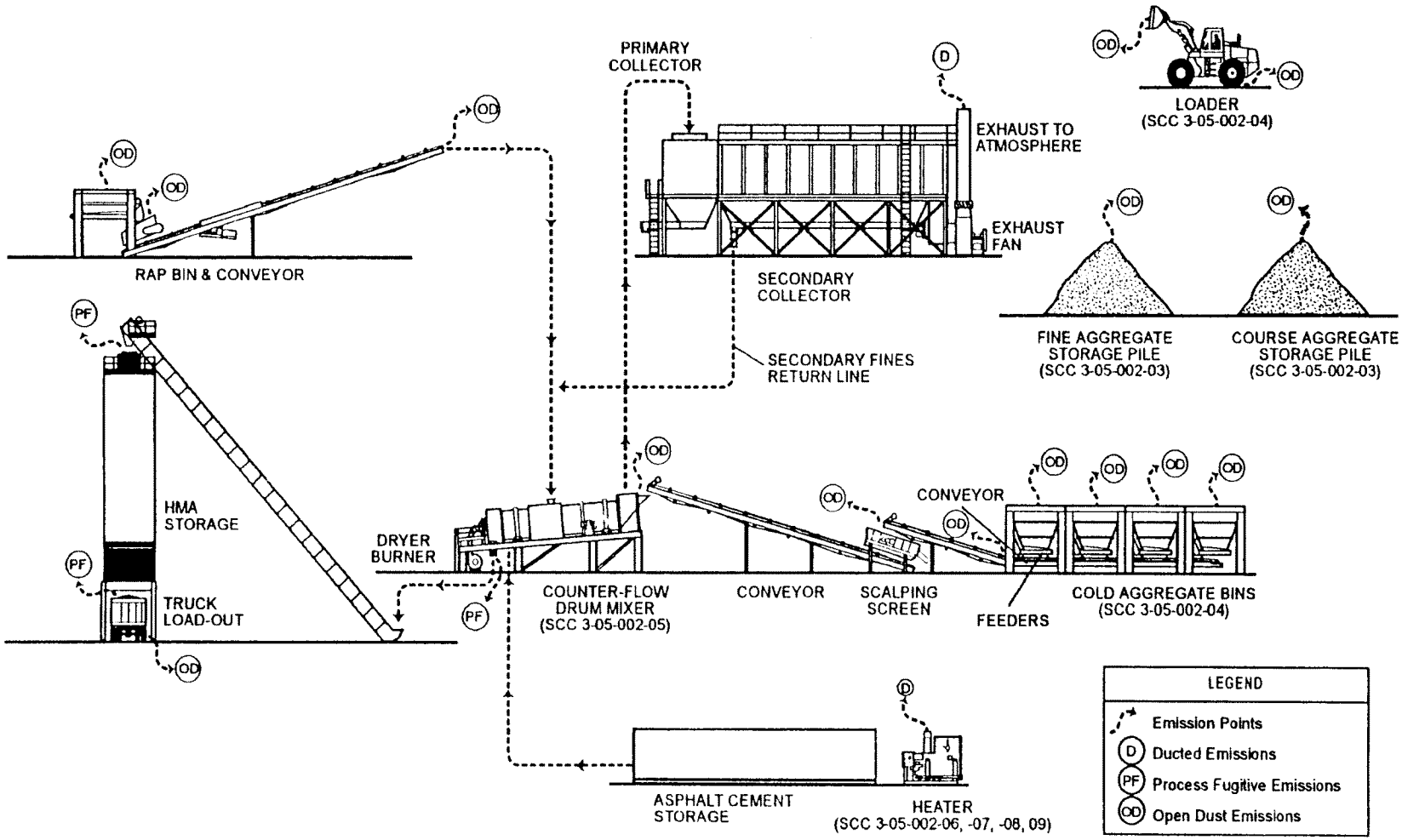

Figure 7-3. General Process Flow Diagram for Counterflow Drum-Mix Asphalt Paving Plants

Source: Reference 7.

design; batch-mix plants and parallel-flow drum-mix plants account for 10 percent and 5 percent respectively.[7]

7.3.2 Emission Control Techniques

Emissions of arsenic from hot-mix asphalt plants most likely occur because of fuel combustion in the aggregate rotary dryers, but some emissions from the aggregate during the drying process are possible. These emissions are most often controlled by wet scrubbers or baghouses.[7]

7.3.3 Emission Factors

Emissions from hot-mix asphalt plants were reexamined recently for the purpose of updating AP-42. Representative batch-mix and drum-mix plants (both parallel and counterflow) were selected for testing. Emissions from hot-oil heaters used to warm stored asphalt concrete were also evaluated. Arsenic emissions from hot-mix plants can result from fuel combustion, aggregate mixing and drying, and asphalt heating. The only arsenic emissions found from these tests were from the drying process. These arsenic emission factors and two from other source testing are provided in Table 7-4.[7,9,10]

7.3.4 Source Locations

In 1983, there were approximately 2,150 companies operating an estimated 4,500 hot-mix asphalt plants in the United States.[8] More recently, the number has fallen to about 3,600 plants.[7] Approximately 40 percent of these companies operate only a single plant. Plants are usually located near the job site, so they are concentrated in areas with an extensive highway and road network.[8] Additional information on the location of individual hot-mix asphalt facilities can be obtained by contacting the National Asphalt Pavement Association in College Park, Maryland.

6#$.'ffi├☼┤ffiffi#45'0+%ffi'/+55+10ffi(#%6145ffi(41/ffi#52*#.6ffi%10%4'6'ffi241&7%6+10

5%%0WODGT	'OKUUKGPQWTEG	%QPVTQNXKEG	#XGTCIGOKUUKQPEVQT KPND◄VQP C	'OKUUKQPEVQT 4CVKPI	4GHGTGPEG
┴☼┤☼↕¶☼‼	4QVCT&T[GT %QPXGPVKQPNCPV 2NCPV	((	↑┤↑↕Z‼↕	'	├
		/WNVKRNG[%GENQPYGKVJQWV (N[#UJ4GKPLGEVKQP)	┴┤┴Z‼↕ ☼	7	←
┴☼┤☼↕¶☼┤	&TW&T[GT *QV#URJCN2NCPVU	0QPG	¶┤↕Z‼↕	7	‼↕
		((	‼┤‼↕Z‼↕ ☼ D	&	├

C 'OKUUKQPCEVQTKPNDQHRQNNWVCPVKVVGTVQPQHCURJCNEQPETGVGQFWEG6QEQPXGTVQMKNQITCRGTOGVTKEQP MI◄VQPPGOWNVKRN[┤┤┤
D (GGFOCVGTKCRENWFG#2┤

7.4 Abrasive Grain Processing

Abrasive grain manufacturers produce materials for use by bonded and coated abrasive product manufacturers to make abrasive products.

7.4.1 Process Description

The most commonly used abrasive materials for abrasive grain manufacturing are silicon carbide and aluminum oxides. These synthetic materials account for as much as 80 to 90 percent of the abrasive grains produced domestically. Other materials used for abrasive grains are cubic boron nitride (CBN), synthetic diamonds, and several naturally occurring minerals such as garnet and emery. The use of garnet as an abrasive grain is decreasing. CBN is used for machining the hardest steels to precise forms and finishes. The largest application of synthetic diamonds has been in wheels for grinding carbides and ceramics. Natural diamonds are used primarily in diamond-tipped drill bits and saw blades for cutting or shaping rock, concrete, grinding wheels, glass, quartz, gems, and high-speed tool steels. Other naturally occurring abrasive materials (including garnet, emery, silica sand, and quartz) are used in finishing wood, leather, rubber, plastics, glass, and softer metals.[11]

Silicon carbide is manufactured in a resistance arc furnace charged with a mixture of approximately 60 percent silica sand and 40 percent finely ground petroleum coke. A small amount of sawdust is added to the mix to increase its porosity so that the CO formed during the process can escape freely. Common salt is added to the mix to promote the carbon-silicon reaction and remove impurities in the sand and coke. During the heating period, the furnace core reaches approximately 4,000(F, at which point a large portion of the load crystallizes. At the end of the run, the furnace contains a core of loosely knit silicon carbide crystals surrounded by unreacted or partially reacted raw materials. The silicon carbide crystals are removed to begin processing into abrasive grains.

Fused aluminum oxide is produced in pot-type electric arc furnaces with capacities of several tons. Before processing, bauxite, the crude raw material, is calcined at about 1,740(F to

remove both free and combined water. The bauxite is then mixed with ground coke (about 3 percent) and iron borings (about 2 percent). An electric current is applied and the intense heat, on the order of 3,700(F, melts the bauxite and reduces the impurities that settle to the bottom of the furnace. As the fusion process continues, more bauxite mixture is added until the furnace is full. The furnace is then emptied and the outer impure layer is stripped off. The core of aluminum oxide is then removed to be processed into abrasive grains.

CBN is synthesized in crystal form from hexagonal boron nitride, which is composed of atoms of boron and nitrogen. The hexagonal boron nitride is combined with a catalyst such as metallic lithium at temperatures in the range of 3,000(F and pressures of up to 1,000,000 pounds per square inch (psi).

Synthetic diamond is manufactured by subjecting graphite in the presence of a metal catalyst to pressures in the range of 808,000 to 1,900,000 psi at temperatures in the range of 2,500 to 4,500(F.

Figure 7-4 presents a process flow diagram for abrasive grain processing.[11] Abrasive grains for both bonded and coated abrasive products are made by graded crushing and close sizing of either natural or synthetic abrasives. Raw abrasive materials first are crushed by primary crushers and then reduced by jaw crushers to manageable size, approximately 0.75 inches. Final crushing is usually accomplished with roll crushers that break up the small pieces into a usable range of sizes. The crushed abrasive grains are then separated into specific grade sizes by passing them over a series of screens. If necessary, the grains are washed in classifiers to remove slimes, dried, and passed through magnetic separators to remove iron-bearing material before they are again closely sized on screens. This careful sizing is necessary to prevent contamination of grades by coarser grains. Sizes finer than 250 grit are separated by hydraulic flotation and sedimentation or by air classification.

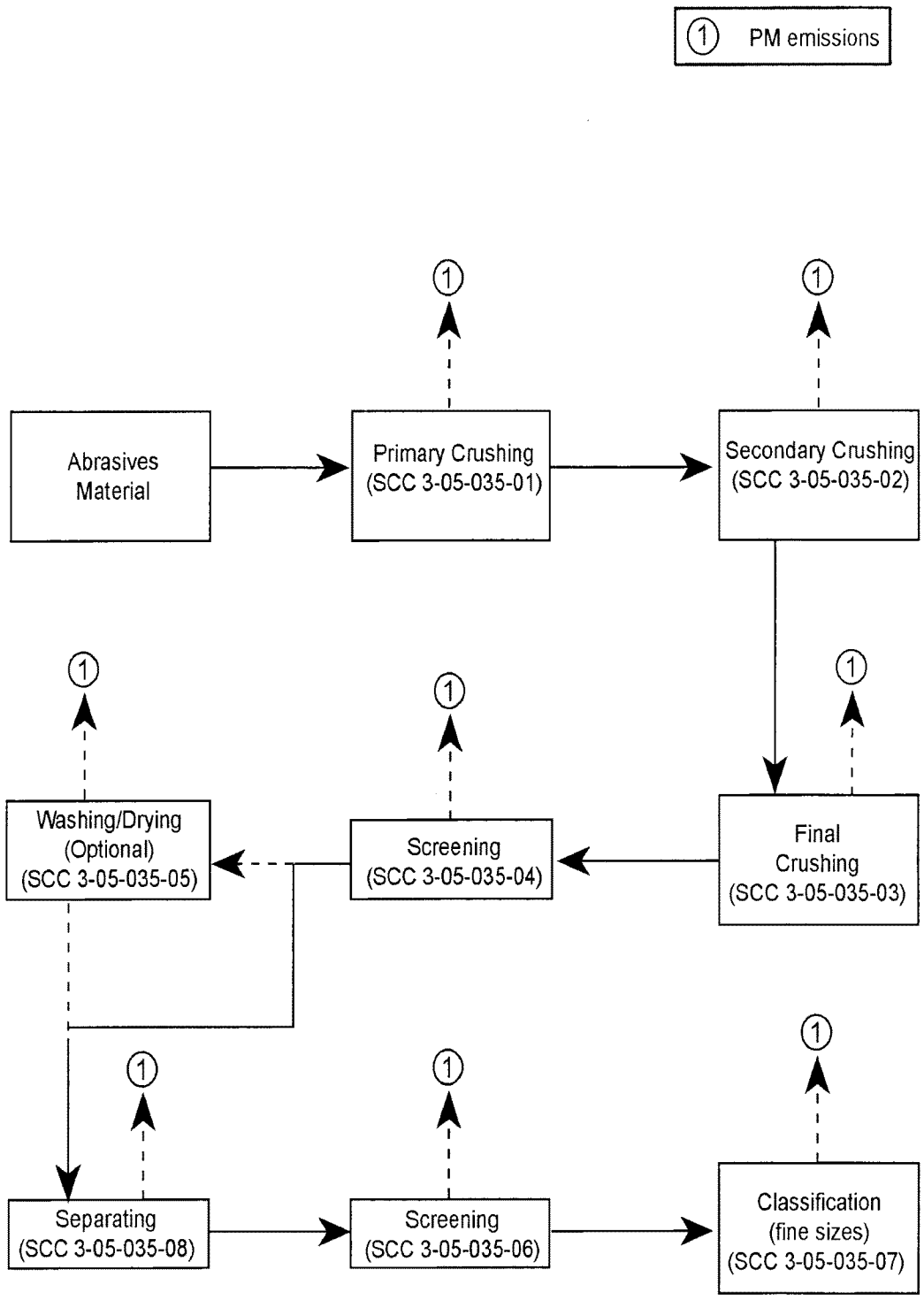

Figure 7-4. Flow Diagram for Abrasive Grain Processes

Source: Reference 11.

7.4.2 Emission Control Techniques

Fabric filters preceded by cyclones are used at some facilities to control PM emissions from abrasive grain production. This configuration of control devices can attain controlled emission concentrations of 37 micrograms per dry standard cubic meter (0.02 grains per dry standard cubic foot) and control efficiencies in excess of 99.9 percent. Little other information is available on the types of controls used by the abrasives industry to control PM emissions. However, it is assumed that other conventional devices such as scrubbers and electrostatic precipitators can be used to control PM emissions from abrasives grain and products manufacturing.[11]

7.4.3 Emission Factors

Little information is available on emissions from the manufacture of abrasive grains and products.

Emissions from the production of synthetic abrasive grains, such as aluminum oxide and silicon carbide, are likely to consist primarily of PM, PM_{10}, and CO from the furnaces. Aluminum oxide processing takes place in an electric arc furnace and involves temperatures up to 4,710(F with raw materials of bauxite ore, silica, coke, iron borings, and a variety of minerals that include chromium oxide, cryolite, pyrite, and silane. This processing is likely to emit fluorides, sulfides, and metal constituents of the feed material.

The primary emissions from abrasive grain processing consist of PM and PM_{10} from the crushing, screening, classifying, and drying operations. PM is also emitted from materials handling and transfer operations. Table 7-5 presents an arsenic emission factor developed from the results of a metals analysis conducted on a rotary dryer controlled by a wet scrubber in an abrasive grain processing facility.[11]

TABLE 7-5. ARSENIC EMISSION FACTOR FOR ABRASIVE GRAIN PROCESSING

SCC Number	Emission Source	Control Device	Average Emission Factor in lb/ton[a]	Emission Factor Rating
3-05-035-05	Rotary Dryer: Sand Blasting Grit	Wet Scrubber	2.40×10^{-4}	E

Source: Reference 11.

[a]Emission factor is expressed in lb of pollutant emitted per ton of grit fed into dryer. To convert to kg per metric ton (kg/tonne), multiply by 0.5.

7.4.4 Source Locations

The abrasives industry is composed of approximately 400 companies throughout the United States engaged in abrasive grain manufacturing, bonded abrasive product manufacturing, and coated abrasive product manufacturing.[11] However, the majority of the arsenic emissions from abrasive grain manufacturing come from the primary silicon carbide and aluminum oxide production facilities, and less than ten of these facilities are currently in operation in the United States.[12,13] The locations of these facilities are shown in Table 7-6.

7.5 Portland Cement Production

Most of the hydraulic cement produced in the United States is Portland cement--a mixture primarily composed of calcium silicates, aluminates, and aluminoferrites. There are four primary components in Portland cement manufacturing: raw materials handling, kiln feed preparation, pyroprocessing, and finished cement grinding. Pyroprocessing, the fuel intensive process accomplished in cement kilns, has been identified as a potential source of arsenic emissions and constitutes the primary focus of this chapter.[14]

TABLE 7-6. 1995 U.S. PRIMARY ABRASIVE GRAIN MANUFACTURER LOCATIONS BY STATE

State	No. of Facilities
Illinois	1
Massachusetts	2
New York	3

Source: References 12,13.

7.5.1 Process Description

Figure 7-5 presents a basic flow diagram of the Portland cement manufacturing process. The process can be divided into four major steps: raw material acquisition and handling, kiln feed preparation, pyroprocessing, and finished cement grinding.[14]

The initial step in the production of Portland cement manufacturing is raw materials acquisition. Calcium, which is the element of highest concentration in Portland cement, is obtained from a variety of calcareous raw materials, including limestone, chalk, marl, sea shells, aragonite, and an impure limestone known as "natural cement rock." The other raw materials--silicon, aluminum, and iron--are obtained from ores and minerals such as sand, shale, clay, and iron ore. Arsenic is expected to be present in the ores and minerals extracted from the earth. The only potential source of arsenic emissions from raw material acquisition would be due to wind-blown particulate-containing arsenic from the quarry operations. Arsenic emissions are expected to be negligible from these initial steps in Portland cement production.[14]

The second step involves preparation of the raw materials for pyroprocessing (thermal treatment). Raw material preparation includes a variety of blending and sizing operations designed to provide a feed with appropriate chemical and physical properties. The raw material processing differs for wet processes and dry processes. At facilities where the dry process is used, the moisture content in the raw material, which can range from less than 1 percent to

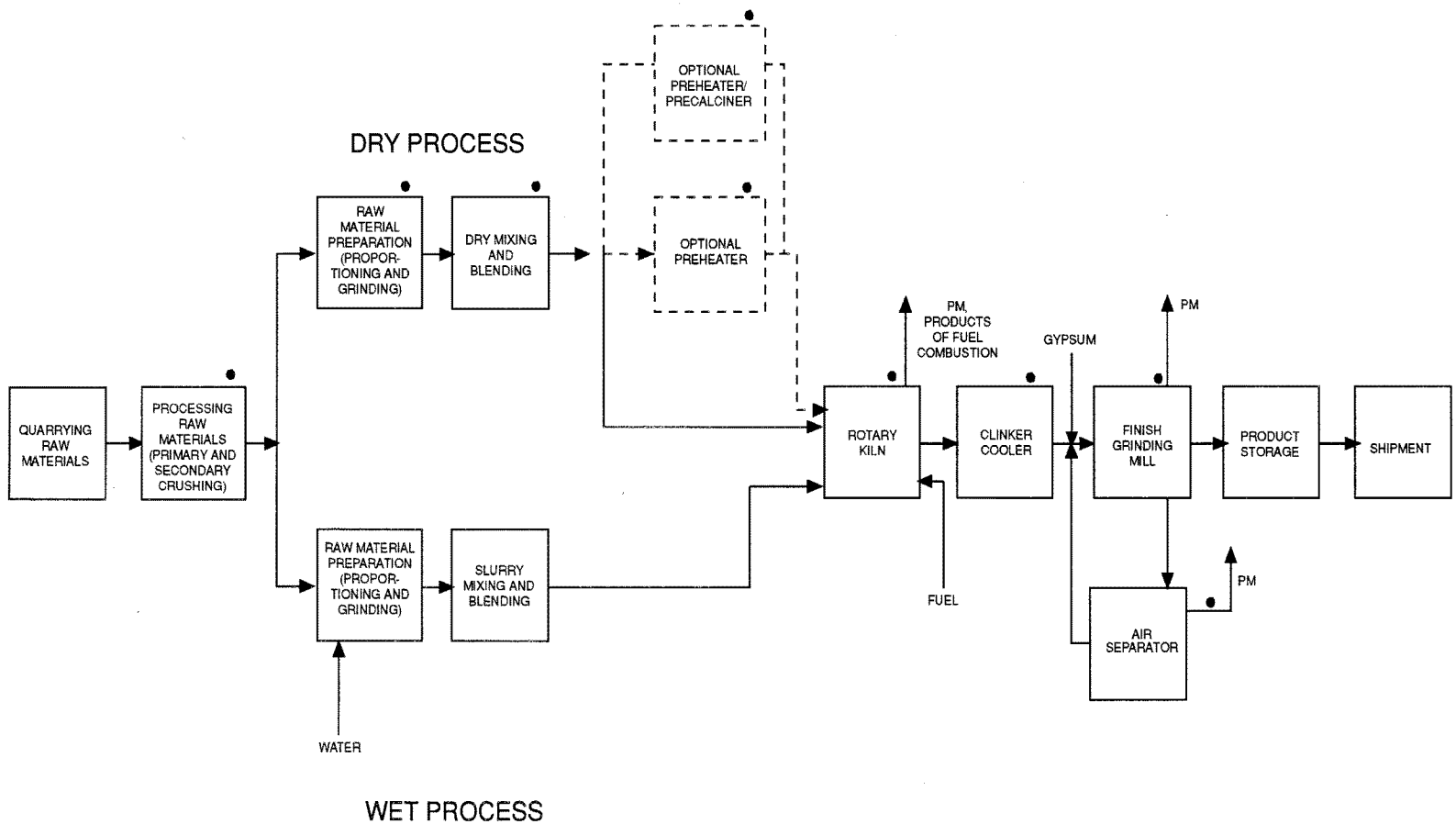

Figure 7-5. Process Flow Diagram Of Portland Cement Manufacturing Process

Source: Reference 15.

greater than 50 percent, is reduced to less than 1 percent. Arsenic emissions can occur during this drying process, but are anticipated to be very low because the drying temperature is much below the boiling point of arsenic. At some facilities, heat for drying is provided by the exhaust gases from the pyroprocessor. At facilities where the wet process is used, water is added to the raw material during the grinding step, thereby producing a pumpable slurry containing approximately 65 percent solids.[14]

Pyroprocessing of the raw material is carried out in the kiln, which is the heart of the Portland cement manufacturing process. During pyroprocessing, the raw material is transformed into clinkers, which are gray, glass-hard, spherically shaped nodules that range from 0.125 to 2.0 in. in diameter. The chemical reactions and physical processes that take place during pyroprocessing include the following:

1. Evaporation of uncombined water from raw materials as material temperature increases to 212(F.

2. Dehydration as the material temperature increases from 212(F to approximately 800(F to form the oxides of silicon, aluminum, and iron.

3. Calcination, during which carbon dioxide (CO_2) is evolved between 1,650(F and 1,800(F to form calcium oxide.

4. Reaction of the oxides in the burning zone of the rotary kiln to form cement clinker at temperatures of about 2,750(F.[14]

The rotary kiln is a long, cylindrical, slightly inclined, refractory-lined furnace. The raw material mix is introduced into the kiln at the elevated end, and the combustion fuels are usually introduced into the kiln at the lower end in a countercurrent manner. The rotary motion of the kiln transports the raw material from the elevated end to the lower end. A combination of fuels such as coal, petroleum coke, or natural gas is used to provide energy for calcination. Occasionally, oil, waste plastics, waste solvents, or used oil are used although the use of waste solvents is becoming less common. Trace amounts of arsenic are naturally present in coal and oil. The use of other materials such as scrap tires is becoming more common.[16]

Combustion of fuel during the pyroprocessing step contributes to potential arsenic emissions. Arsenic may also be present in the waste-derived fuel mentioned above. Most of the arsenic that is volatilized in the hot end of the kiln is expected to condense onto PM upon cooling and is either removed in the downstream equipment, such as the APCD, or removed in the bypass gases or the preheater.[14]

Pyroprocessing can be carried out using one of five different processes: wet, semi-dry, dry, dry with a preheater, and dry with a preheater/precalciner. These processes essentially accomplish the same physical and chemical steps described above. The last step in the pyroprocessing is the cooling of the clinker. This step recoups up to 30 percent of the heat input to the kiln system, locks in desirable product qualities by freezing mineralogy, and makes it possible to handle the cooled clinker with conventional conveying equipment. Finally, after the cement clinker is cooled, a sequence of blending and grinding operations is carried out to transform the clinker into finished Portland cement.[14]

7.5.2 Emission Control Techniques

With the exception of the pyroprocessing operations, the emission sources in the Portland cement industry can be classified as either process emissions or fugitive emissions. The primary pollutant resulting from the fugitive sources is PM, which contains a fraction of arsenic. The control measures used for these fugitive dust sources are comparable to those used throughout the mineral products industries.

Process fugitive emission sources include materials handling and transfer, raw milling operations in dry process facilities, and finish milling operations. Typically, particulate emissions from these processes are captured by a ventilation system vented to fabric filters. Because the dust from these units is returned to the process, they are considered to be process units as well as air pollution control devices. The industry uses shaker, reverse air, and pulse jet filters, as well as some cartridge units, but most newer facilities use pulse jet filters. For process fugitive operations, the different systems are reported to achieve typical outlet PM loadings of 0.02 grains per actual cubic foot (gr/acf).[17] Because the arsenic is in particle form, it is expected

that these control devices will have a positive effect on reducing arsenic emissions; however, these reductions may not be equivalent to those achieved for overall particulate reduction, since arsenic is likely to occur in the smaller size range of particle size distribution.

In the pyroprocessing units, PM emissions are controlled by fabric filters (reverse air, pulse jet, or pulse plenum) and ESPs. The reverse air fabric filters and ESPs typically used to control kiln exhausts are reported to achieve outlet PM loadings of 0.02 gr/acf. Clinker cooler systems are controlled most frequently with pulse jet or pulse plenum fabric filters. A few gravel bed filters have been used on clinker coolers.[14]

7.5.3 Emission Factors

The principal source of arsenic emissions is expected to be from the kiln. The majority of the arsenic input from the raw materials and fuels is incorporated into the clinker. Arsenic volatilized from the kiln is either removed in the bypass gases, the preheater, or the APCD. Small quantities of emissions would be expected during raw materials processing and mixing in the form of fugitive dust containing naturally occurring quantities of arsenic compounds in raw materials.

Processing steps that occur after the calcining process in the kiln would be expected to be a much smaller source of emissions than the kiln. Emissions resulting from all processing steps include particulate matter. Additionally, emissions from the pyroprocessing step include other products of fuel combustion such as sulfur dioxide (SO_2), nitrogen oxides (NO_x), carbon dioxide (CO_2), and carbon monoxide (CO). Carbon dioxide from the calcination of limestone will also be present in the flue gas.

Arsenic emissions data for Portland cement kilns with various process, fuel, and control configurations were compiled by the U.S. EPA's Office of Solid Waste in 1994.[15a] Testing was conducted at 35 Portland cement kilns to certify compliance with the BIF Rule. Emission factors developed from the study for dry process kilns and differentiated by fuel and waste type are presented in Table 7-7.[18] Table 7-8 presents emission factors for various kiln types.[18]

6#$.'ffi├☼├ffiffi#45'0+%ffi'/+55+10ffi(#%6145ffi(14ffi&4;ffi241%'55ffi2146.#0&
%'/'06ffi-+.05ffi$;ffi(7'.ffi#0&ffi9#56'ffi6;2'

5%% 0WODGT	(WGN 6[RG	9CUVG6[RG	%QPVTQNXKEG	#XGTCIG 'OKUUKQP KPND◄VQP	'OKUUKQP (CEVQT 4CVKPI
┴☼┼☼↕↕☼↑	%QCN	5QNKF◄KSWKF C\CTFQWU 9CUVG	'52	!┼¶┼Z!↕	&
		0QPG	3WGPE/QNWOP◄((	!┼¶┼Z!↕ ☼	&
		5QNKF◄KSWKF C\CTFQWU 9CUVG	3WGPE/QNWOP◄((	!┼¶┼Z!↕	&
		5QNKF◄KSWKF C\CTFQWU 9CUVG	((	!┼→┼Z!↕	&
┴☼┼☼↕↕☼↑	%QMG	.KSWKF C\CTFQWU 9CUVG	/WNVKRNG ENQPG◄((	!┼→┼Z!↕	&

5QWTEG4GHGTGPEG

C 'OKUUKQP HCEVQT KUGZRTGUUKGFND QHRQNNWVCPV KVVGRGT VQP QHENKPMGRTQFWEG6QEQPXGTVQMI RGTOGVTKE
VQP MI◄VQPPG ☼DWNVKRD[[↕┼┼

'52 'NGEVTQUVC2TKGEKRKVCVQT┼
(((CDTKE(KNVGT┼

Additional emission factor data may be available from databases developed by trade associations or industry groups.[19]

7.5.4 Source Locations

The Portland cement manufacturing industry is dispersed geographically throughout the United States. Thirty-six states have at least one facility. As of 1996, there were 109 operating Portland cement plants in the United States, operating 202 kilns with a total annual clinker capacity of approximately 80 million tons. Table 7-9 presents the name of each Portland cement plant and their kiln types and capacities as reported in 1996.[20]

TABLE 7-8. ARSENIC EMISSION FACTORS FOR PORTLAND CEMENT MANUFACTURING FACILITIES

5%%0WODGT	'OKUUKGP5QWTEG	%QPVTQNGXKEG	#XGTCIGOKUUKQPEVQT KPND◀VQPENKPMGT	'OKUUKQPEVQT4CVKP
[illegible]	&T[2TQEGUKNPU	(('52	[illegible]	& '
[illegible]	&T[2TQEGU2TGJGCVGKNPU	(('52	[illegible]	& '
[illegible]	&T[2TQEGU2TGJGCVGT◀ 2TGECNEKPGNP	(('52	[illegible]	& '
[illegible]	9GV2TQEGUKNPU	(('52	[illegible]	& '

[illegible]

5QWTEG4GHGTGPEG

C6QEQPXGTVQMI RGTOGVTKEQP MI◀VQPPG◇DWNVKRD[[[illegible]

'52 'NGEVTQUVC2TGEKRKVCVQT

(((CDTKEKNVGT

6#$. ' ffi ☼ ffiffi2146 . #0&ffi%' / ' 06ffi241&7%6+10ffi(#%+.+6+'5ffi‼←♂

Company	Location	No./type of kiln	Clinker Capacity (tons/yr)
Alabama			
Blue Circle, Inc.	Calera, AL	2-dry	594
Holnam, Inc.	Theodore, AL	1-dry	1,438
Lehigh Portland Cement	Leeds, AL	1-dry	700
Medusa Cement Co.	Demopolis, AL	1-dry	809
National Cement Co. of Alabama	Ragland, AL	1-dry	944
Arizona			
Ash Grove Cement Co.	Foreman, AZ	3-wet	883
California Portland Cement	Rillito, AZ	4-dry	1,150
Phoenix Cement Co.	Clarkdale, AZ	3-dry	630
California			
Calaveras Cement Co.	Redding, CA	1-dry	649
Calaveras Cement Co.	Tehachapi, CA	1-dry	900
California Portland Cement	Colton, CA	2-dry	748
California Portland Cement	Mojave, CA	1-dry	1,239
Kaiser Cement Corp.	Cupertino, CA	1-dry	1,603
Mitsubishi Cement Corp.	Lucerne Valley, CA	1-dry	1,702
National Cement Co. of California	Lebec, CA	1-dry	647
Riverside Cement Co.	Oro Grande, CA	7-dry	1,177
Riverside Cement Co.	Riverside, CA	2-dry	110
RMC Lonestar	Davenport, CA	1-dry	799
Southdown, Inc.	Victorville, CA	2-dry	1,530
Colorado			
Holnam, Inc.	Florence, CO	3-wet	837
Holnam, Inc.	Fort Collins, CO	1-dry	496
Southdown, Inc.	Lyons, CO	1-dry	430
Florida			
Florida Crushed Stone	Brooksville, FL	1-dry	602
Pennsuco Cement Co.	Medley, FL	2-wet	953
Rinker Portland Cement Corp.	Miami, FL	2-wet	543
Southdown, Inc.	Brocksville, FL	2-dry	1,212
Georgia			
Blue Circle, Inc.	Atlanta, GA	2-dry	614
Medusa Cement Co.	Clinchfield, GA	1-wet, 1-dry	795

ED_000719_00032208-00233

6#$. ' ffi ├☼┤ffiffi2146 . #0&ffi%' / ' 06ffi241&7%6+10ffi(#%+.+6+'5ffi‼←┤♂%106+07'&♂

Company	Location	No./type of kiln	Clinker Capacity (tons/yr)
Iowa			
Holnam, Inc.	Mason City, IA	2-dry	919
Lafarge Corp.	Bufalo, IA	1-dry	927
Lehigh Portland Cement	Mason City, IA	1-dry	804
Idaho			
Ash Grove Cement Co.	Inkom, ID	2-wet	259
Illinois			
Centex	La Salle, IL	1-dry	576
Dixon-Marquette	Dixon, IL	4-dry	521
Lafarge Corp.	Grand Chain, IL	2-dry	1,159
Lone Star Industries	Oglesby, IL	1-dry	574
Indiana			
Essroc Materials	Logansport, IN	2-wet	453
Essroc Materials	Speed, IN	2-dry	1,013
Lehigh Portland Cement	Mitchell, IN	3-dry	729
Lone Star Industries	Greencastle, IN	1-wet	723
Kansas			
Ash Grove Cement Co.	Chanute, KS	2-wet	484
Lafarge Corp.	Fredonia, KS	2-wet	384
Monarch Cement Co.	Humboldt, KS	3-dry	672
RC Cement Co., Inc.	Independence, KS	4-dry	299
Kentucky			
Kosmos Cement Co.	Kosmosdale, KY	1-dry	778
Maryland			
Essroc Materials	Frederick, MD	2-wet	372
Independent Cement Corp.	Hagerston, MD	1-dry	519
Lehigh Portland Cement	Union Bridge, MD	4-dry	990
Maine			
Dragon Products Co.	Thomaston, ME	1-wet	431
Michigan			
Holnam, Inc.	Dundee, MI	2-wet	1,054
Lafarge Corp.	Alpena, MI	5-dry	2,267
Medusa Cement Co.	Charlevoix, MI	1-dry	1,273
St. Marys Cement Corp.	Detroit, MI	1-wet	649

6#$. ' ffi ☼ ffiffi2146 . #0&ffi%' / ' 06ffi241&7%6+10ffi(#%+.+6+'5ffi‼←♂%106+07'&♂

Company	Location	No./type of kiln	Clinker Capacity (tons/yr)
Missouri			
Continental Cement Co., Inc.	Hannibal, MO	1-wet	597
Holnam, Inc.	Clarksville, MO	1-wet	1,297
Lafarge Corp.	Sugar Creek, MO	2-dry	505
Lone Star Industries	Cape Giradeau, MO	1-dry	1,188
RC Cement Co., Inc.	Festus, MO	2-dry	1,269
Mississippi			
Holnam, Inc.	Artesia, MS	1-wet	476
Montana			
Ash Grove Cement Co.	Montana City, MT	1-wet	301
Holnam, Inc.	Three Forks, MT	1-wet	350
Nevada			
Ash Grove Cement Co.	Louisville, NE	2-dry	927
New Mexico			
Rio Grande Cement Corp.	Tijeras, NM	2-dry	475
New York			
Blue Circle, Inc.	Ravena, NY	2-wet	1,692
Glens Falls Cement Co., Inc.	Glens Falls, NY	1-dry	509
Independent Cement Corp.	Catskill, NY	1-wet	658
Ohio			
Lafarge Corp.	Paulding, OH	2-wet	501
Southdown, Inc.	Fairborn, OH	1-dry	598
Oklahoma			
Blue Circle, Inc.	Tulsa, OK	2-dry	649
Holnam, Inc.	Ada, OK	2-wet	598
Lone Star Industries	Pryor, OK	3-dry	684
Oregon			
Ash Grove Cement Co.	Durkee, OR	1-dry	524
Pennsylvania			
Allentown Cement Co., Inc.	Blandon, PA	2-dry	948
Armstrong Cement & Sup. Corp.	Cabot, PA	2-wet	323
Essroc Materials	Nazareth, PA	1-dry	1,174
Essroc Materials	Nazareth, PA	4-dry	583
Essroc Materials	Bessemer, PA	2-wet	575

6#$. 'ffi├☼┤ffiffi2146 . #0&ffi%' / '06ffi241&7%6+10ffi(#%+.+6+'5ffi‼←┤♂%106+07'&♂

Company	Location	No./type of kiln	Clinker Capacity (tons/yr)
Pennsylvania (continued)			
Giant Cemenet Holding, Inc.	Bath, PA	2-wet	601
Kosmos Cement Co.	Pittsburgh, PA	1-wet	384
Lafarge Corp.	Whitehall, PA	3-dry	870
Lehigh Portland Cement	York, PA	1-wet	99
Medusa Cement Co.	Wampum, PA	3-dry	673
RC Cement Co., Inc.	Stockertown, PA	2-dry	911
South Carolina			
Blue Circle, Inc.	Harleyville, SC	1-dry	745
Giant Cement Holding, Inc.	Harleyville, SC	4-wet	867
Holnam, Inc.	Holly Hill, SC	2-wet	1,064
South Dakota			
Dacotah Cement	Rapid City, SD	2-wet, 1-dry	893
Tennessee			
RC Cement Co., Inc.	Chattanooga, TN	2-wet	438
Southdown, Inc.	Knoxville, TN	1-dry	638
Texas			
Alamo Cement Co.	San Antonio, TX	1-dry	846
Capitol Aggregates, Inc.	San Antonio, TX	1-wet, 1-dry	839
Holnam, Inc.	Midlothian, TX	1-dry	1,117
Lehigh Portland Cement	Waco, TX	1-wet	85
Lone Star Industries	Sweetwater, TX	3-dry	485
North Texas Cement	Midlothian, TX	3-wet	851
Southdown, Inc.	Odessa, TX	2-dry	526
Sunbelt Cmenet Corp.	New Braunfels, TX	1-dry	980
Texas Industries	Midlothian, TX	4-wet	1,258
Texas Industries	New Braunfels, TX	1-dry	847
Texas-Lehigh Cement Co.	Buda, TX	1-dry	1,103
Utah			
Ash Grove Cement Co.	Nephi, UT	1-dry	789
Holnam, Inc.	Morgan, UT	2-wet	317
Virginia			
Roanoke Cement Co.	Cloverdale, VA	1-dry	946

6#$.'ffi├☼┤ffiffi2146.#0&ffi%'/'06ffi241&7%6+10ffi(#%+.+6+'5ffi‼←┤♂%106+07'&♂

Company	Location	No./type of kiln	Clinker Capacity (tons/yr)
Washington			
Ash Grove Cement Co.	Seattle, WA	1-dry	747
Holnam, Inc.	Seattle, WA	1-wet	446
West Virginia			
Capitol Cement Corporation	Martinsburg, WV	3-wet	955
Centex	Fernley, WV	2-dry	480
Royal Cement Co., Inc.	Logandale, WV	1-dry	195
Wyoming			
Centex	Laramie, WY	2-dry	644

5QWTEG4GHGTGP¶┤G

7.6 Open Burning Of Scrap Tires

7.6.1 Process Description

Approximately 240 million vehicle tires are discarded annually.[21] Although viable methods for recycling exist, less than 25 percent of discarded tires are recycled; the remaining 175 million are discarded in landfills, stockpiles, or illegal dumps.[22] Although it is illegal in many States to dispose of tires by open burning, fires often occur at tire stockpiles and through illegal burning activities. These fires generate a huge amount of heat and are difficult to extinguish (some tire fires continue for months). Arsenic is a component of tires and is emitted from the combustion of these tires.

7.6.2 Emission Factors

Table 7-10 contains emission factors for the open burning of tires.[22] The average emission factor presented represents the average of tests performed on the simulated open burning of chunk (defined as one-quarter or one-sixth of an entire tire) and shredded tires. When estimating emissions from an accidental tire fire, note that emissions from burning tires are generally dependent on the burn rate of the tire. A greater potential for emissions exists at lower burn rates, such as when a tire is smoldering rather than burning out of control.[22]

Besides accidental or illegal open burning of tires, waste tires are incinerated for energy recovery and disposal purposes. Tires are combusted at tire-to-energy facilities, cement kilns, tire manufacturing facilities, and as supplemental fuel in boilers. No emission factors for arsenic from tire incineration have been located.

7.6.3 Source Location

Open burning of scrap tires can occur at permitted landfills that stockpile scrap tires, at closed landfills that already contain scrap tires, and at illegal dumpsites where tires are discarded.

6#$.'ffi├☼!!↕┤ffiffi#45'0+%ffi'/+55+10ffi(#%6145ffi(14ffi12'0ffi$740+0)ffi1(ffi5%4#2ffi6+4'5

5%% 0WODGT	'OKUUKQPffi5QWTEG	%QPVTQN &GXKEG	#XGTCIGffi'OKUUKQP (CEVQTffKP ND◀!↕↕↕ffMQP[a]	'OKUUKQP (CEVQT 4CVKPI
┤☼┴☼↕¶☼┴	5KOWNCVGFffi1RGPffi$WTPKPIffiQH %JWPMffi#WVQOQDKNGffi6KTGU	0QPG	!!┤↕Z!!↕[illegible]	%
	5KOWNCVGFffi1RGPffi$WTPKPIffiQH 5JTGFFGFffi#WVQOQDKNGffi6KTGU	0QPG	┬┤↕Z!!↕[illegible]	%

Source: Reference 23.

[a] Emission factors are expressed in lb of pollutant emitted per 1000 ton of waste incinerated. To convert to kg per 1000 metric tons (kg/1000 tonnes), multiply by 0.907.

The fires can start by accident or are intentionally set by arsonists, and thus are unpredictable as to where and when they will occur.

7.7 Grain Milling

Milling is the process of converting grain into flour by mechanical means. The grain is cleaned and a small amount of water is added to prevent the outer part of the kernel from pulverizing. The moistened grain is mechanically crushed slightly and sheared into chunks. The product is sifted to remove the germ and the bran, and the chunks are size separated. The larger chunks are recrushed and the intermediate-sized chunks are ground between smooth rolls.[23] Finally, screens are used to remove undersized and oversized materials, and the final product is transferred to the bagging area, to storage, or to bulk load-out.

The modern milling industry applies many innovations in their process operations. One example is the production of free-flowing flour made by agglomerating the flour particles into clusters by the addition of moisture and spray-drying. This allows for the separation of high protein and high-starch fractions and permits a wide range of custom blending.[24]

Limited arsenic emissions data are available for this category. One report from tests conducted at a rice milling plant was available for review and emission factors developed from that report are presented in Table 7-11. Another test conducted at a feed mill under the California AB 2588 ("Hot Spots") program reported that arsenic was not detected from the baghouse discharge or milling operations.[24]

7.8 Process Heaters

A process heater is similar to an industrial boiler in that heat liberated by the combustion of fuels is transferred by radiation and convection to fluids contained in tubular coils. Process heaters are used in many chemical manufacturing operations to provide steam and heat input essential to chemical processing. They are also used as feed preheaters and as reboilers for some distillation operations. The fuels used in process heaters include natural gas, refinery offgases, and various grades of fuel oil. Gaseous fuels account for about 90 percent of the energy consumed by process heaters.

There are many variations in the design of process heaters depending on their application. In general, the radiant section consists of the burner(s), the firebox, and tubular coils containing the process fluid. Most heaters also contain a convective section in which heat is recovered from hot combustion gases by convective heat transfer to the process fluid.

Process heaters (and boilers) are most applicable where the potential exists for heat recovery from the combustion of the vent stream. For example, vent streams with a high VOC concentration and high flow rate can provide enough equivalent heat value to act as a substitute for fuel that would otherwise be needed.

Emissions data for this category are limited. Emission factors developed from three available test reports are presented in Table 7-12.[25,26,27]

6#$.'ffi⊢☼!!⊢ffiffi#45'0+%ffi'/+55+10ffi(#%6145ffi(14ffi)4#+0ffi/+..+0)

5%% 0WODGT	'OKUUKQP 5QWTEG	%QPVTQNGXKEG	#XGTCIG OKUUKQP KPND◄VQP	'OKUUKQP 4CPIGKP ND◄VQP	'OKUUKQP 4CVKPI
⊢☼¶☼↕☼⊢	)TCKP/KNNKPI/4KEG&T[KPI	0QPG	!⊢↕Z!↕	!⊢!↕Z!↕ ☼ !⊢↕Z!↕ ☼	7
⊢☼¶☼↕☼⊢	)TCKP/KNNKPI/4KEG %NGCPKPI◄/KNNJQWUG	0QPG	!⊢¶Z!↕ ☼	←⊢Z!↕ ☼ !⊢¶Z!↕ ☼	7

5QWTEG4GHGTGPEG

C 'OKUUKQP HCEVQTUTGGZRTGUUKPNDQHRQNNWVCPVKVVGRGTVQPQHTCKPRTQEGUUGFQEQPXGTVQMIRGTOGVTKEQPMI◄VQPPGOWNVKRDN[[↕⊢⊢

⊢☼↑

6#$.'ffi├☼!¶├ffiffi#45'0+%ffi'/+55+10ffi(#%6145ffi(14ffi241%'55ffi*'#6'45

5%% 0WODGT	'OKUUKQP 5RWTEG	%QPVTQN &GXKEG	#XGTCIG OKUUKQP (CEVQT KPND◄/$VW[C]	'OKUUKQP (CEVQT 4CPIG KPND◄/$VW[C]	'OKUUKQP (CEVQT 4CVKPI	4GHGTGPEG
┴☼!!↕☼↕┴☼!!┴	1KNCPF)CU2TQFWEVKQPQ 2PQEGUU 0QPG *GCVGTU/5TWF1KN/5VGCO)GPGTCVQT		←┼←Z!!↕ ☼↑	┼!!┼Z!!↕ ☼↑ ☼ !!┼¶├Z!!↕ ☼↑	7	¶↑
┴☼↕↕☼↕↕!!☼↕!!	2GVTQNGWPO WUVT2KRGNKPGUKN 0QPG (KTGF2TQEGUTGCVGTU		┼↕↕Z!!↕ ☼↑	┼→↕Z!!↕ ☼↑ ☼ ┼┴↕Z!!↕ ☼↑	7	¶├
┴☼!!↕☼↕┴☼↕¶	1KNCPF)CU2TQFWEVKQPQ 4PUKFWCN 0QPG 1KN☼(KTGF2TQEGUTGCVGT		¶├┼↕Z!!↕ ☼↑	←┼┼↕Z!!↕ ☼↑ ☼ ┼┼!!↑Z!!↕ ☼↑	7	¶→

[C] 'OKUUKQP CEVQT GZRTGUUKPND QHRQNNWVGPV KVVGRGT OKNNKQPWQHUGCVKPRWV6QEQPXGTVQTCOURGTGIC,QWNG◄/,♂♂ OWNVKRN[D[↕┼┼

┼☼┼

7.9 Cotton Production and Ginning

Until 1993, arsenic acid (H_3AsO_4) was used as a cotton desiccant in some areas of the U.S. Its use has contributed to arsenic emissions to the atmosphere both from the field where the cotton was grown and from cotton gins.

Prior to mechanical stripping (harvesting) of cotton, the green leaves must be dried to prevent fiber staining and to prevent unacceptable moisture levels in the fiber. Such conditions lower the quality of the cotton. In many cotton producing areas a killer frost occurs before harvest, thus desiccating the leaves. However, in areas without such a frost, a chemical desiccant is needed. Texas and Oklahoma are the primary areas where chemical desiccation has been practiced.

The use of arsenic acid as a cotton desiccant began in 1956 and continued through 1993 when it was banned from use by the EPA.[28] In practice, about 3 pints of arsenic acid per acre was applied by ground or aerial spraying. It has been estimated that only about 5 percent of the arsenic acid reached the intended crop. The remaining overspray either drifted from the field or was deposited in field soil.

Sources of potential arsenic emissions to the atmosphere have included application overspray; arsenic-containing dust and plant matter emitted during harvesting; arsenic-containing dust, plant matter, and lint emitted during ginning; and wind blown soil from fields where spraying has been conducted.[29]

Since the use of arsenic acid as a cotton desiccant has been banned, the emissions potential has been largely eliminated. In some areas where spraying has occurred over many years, it is possible that arsenic accumulated in the soils could still be emitted as windblown dust. However, that potential will continue to diminish over time.

Limited arsenic emissions data for cotton ginning were available in the literature; however, these data are eighteen to twenty years old, and were generated from tests at a cotton

gin which received cotton treated with arsenic acid. The ginning process has changed since that time, and the data are deemed no longer applicable and are therefore not included in this document.

References for Section 7.0

1. Eastern Research Group, Inc. *Clean Air Act, Section 112(k) Candidate Pollutants*, draft report. Research Triangle Park, North Carolina: U.S. Environmental Protection Agency, Office of Air Quality Planning and Standards, Visibility and Ecosystem Protection Group, 1996.

2. U.S. EPA. *Compilation of Air Pollutant Emission Factors*, 5th ed. (AP-42), Vol. I: Stationary Point and Area Sources, Section 11.15: Glass Manufacturing. Research Triangle Park, North Carolina: U.S. Environmental Protection Agency, Office of Air Quality Planning and Standards, 1995.

3. Drake, R A. Glass Technical Institute. San Diego, CA. Letter to Dennis Beauregard. U.S. U.S. Environmental Protection Agency. Research Triangle Park, North Carolina, October 1997.

4. Factor Information Retrieval System Version 4.0 (FIRE 4.0). Research Triangle Park, North Carolina: U.S. Environmental Protection Agency, September 1995.

5. AP-42, 5th ed., *op. cit.*, note 2. Section 2.4, Landfills, 1995.

6. California Air Resources Board. *Source Emissions Testing of Landfills Boiler and Flare System*. Confidential Report No. ERC-3.

7. AP-42, 5th ed., *op. cit.*, note 2. Section 11.1, Mineral Products Industry, 1995.

8. U.S. EPA. *Second Review of New Source Performance Standards for Asphalt Concrete Plants*. EPA-450/3-85-024. Research Triangle Park, North Carolina: U.S. Environmental Protection Agency, Office of Air Quality Planning and Standards, October 1985.

9. Factor Information Retrieval System Version 3.0 (FIRE 3.0), Record Number 724. Research Triangle Park, North Carolina: U.S. Environmental Protection Agency, September 1994.

10. Factor Information Retrieval System Version 3.0 (FIRE 3.0), Record Number 247. Research Triangle Park, North Carolina: U.S. Environmental Protection Agency, September 1994.

11. AP-42, 5th ed., *op cit.*, note 2. Section 11.31, Bonded Abrasive Products, 1995.

12. Holston, R. (Radian International, LLC) and G. Pressbury (U.S. Department of Commerce). Telecon. March 22, 1996.

13. Holston, R. (Radian International, LLC) and A. Wherry (Abrasive Grain Association). Telecon. March 22, 1996.

14. AP-42, 5th ed., *op. cit.*, note 2. Section 11.6, Portland Cement Manufacturing, 1995.

15. U.S. Environmental Protection Agency. Emission Factor Documentation for AP-42, Section 11.6, Portland Cement Manufacturing. Research Triangle Park, North Carolina. 1995.

16. Hawkins, G. Potland Cement Association. Skokie, Ilinois. Letter to Dennis Beauregard. U.S. Environmental Protection Agency. Research Triangle Park, North Carolina. October 31, 1997

17. U.S. EPA. *Locating and Estimating Air Emissions from Sources of Lead and Lead Compounds*, Draft. Research Triangle Park, North Carolina: U.S. Environmental Protection Agency, June 1995.

18. U.S. EPA. *Technical Support for Revision of the Hazardous Waste Combustion Regulations for Cement Kilns and Other Thermal Treatment Devices*, Second Draft. Prepared by Energy and Environmental Research Corporation, Irvine, California, Washington, D.C.: U.S. Environmental Protection Agency, Office of Solid Waste, May 17, 1994.

19. Rigo, H.G. Rigo & Rigo Associates, Inc., Berea, OH. Teleconference with P. Marsosudiro, Eastern Research Group, Morrisville, North Carolina. April 6, 1998.

20. Portland Cement Association. *U.S. and Canadian Portland Cement Industry: Plant Information Summary*. Skokie, IL: Portland Cement Association, 1996.

21. Lemieux, P.M. and J.V. Ryan. Characterization of Air Pollutants Emitted from a Simulated Scrap Tire Fire. *Journal of the Air and Waste Management Association*, 43(#)pp. 1106-1115, August 1993.

22. AP-42, 5th ed., *op. cit.*, note 2. Section 2.5, Open Burning, 1995.

23. Austin, G.T. *Shreve's Chemical Process Industries*, 5th edition, Chapter 25: Food and Food By-Product Processing Industries. 1984. pp. 446-447.

24. Hargrove, K.L., Farmer's Rice Cooperative, to R. A. Isom, Fresno County. Transmittal of AB-2588 Air Toxics Emission Report. Rice Drying. September 11, 1990.

25. Radian 1993. TOX_D_EF, Record 324, Composite of 24 tests on 8 units; CARB 2588 data. June 11, 1995.

26. Pope & Steiner Environmental Services for Texaco Trading and Transportation, Inc. *AB-2588 Testing at Texaco Trading and Transportation, Inc.* Panoche Station, Volumes I, II, and III. Report PS-90-2187. (WSPA) September 1990.

27. Southern California Edison Company. *Emissions Inventory Testing at Huntington Beach Generating Station, Fuel Oil Heater No. 2.* CARNOT. Rosemead, California. May 1990.

28. Federal Register, Volume 58, No. 139. Thursday, July 22, 1993. p. 39205. *Arsenic Acid; Receipt of Request to Cancel; Cancellation Order.* U.S. Environmental Protection Agency. 58 FR 39205.

29. U.S. EPA. *Preliminary Study of Sources of Inorganic Arsenic.* EPA-450/5-82-005. Research Triangle Park, North Carolina: U.S. Environmental Protection Agency, Office of Air Quality Planning and Standards, August 1982.

SECTION 8.0
SOURCE TEST PROCEDURES

Arsenic emissions can be measured by a number of methods. The following methods are applicable for measuring emissions of arsenic in ambient air and arsenic contained in stack gas emissions: (1) National Institute of Occupational Safety and Health (NIOSH) Method 7300,[1] (2) NIOSH Method 7900,[2] (3) NIOSH Method 7901,[1] (4) NIOSH Method 5022,[3] (5) EPA's Methodology for the Determination of Suspended Particulate Matter in the Atmosphere (High-Volume Method), Appendix B, and Appendix G modified Methodology for the Determination of Lead in Suspended Particulate Matter Collected From Ambient Air (40 CFR 50),[4] (6) EPA Method 29,[5] (7) EPA Method 108,[6] (8) EPA BIF Method, Section 3.0,[7] (9) California Air Resources Board (CARB) Method 423,[8] and (10) CARB Draft Method 436m.[9]

All of the NIOSH methods and EPA 40 CFR 50 Appendixes apply to the collection and analysis of arsenic from ambient air. EPA Method 29 and BIF, Section 3.0, are part of the Boiler and Industrial Furnace (BIF) Regulations and are used to sample for total inorganic and organic arsenic, and other metals, in stack gases. EPA Method 108 and CARB Method 423 are used to sample specifically for inorganic and organic arsenic in stack gases. CARB Draft Method 436 is used to sample for total inorganic and organic arsenic, and other metals, in stack gases.

Sections 8.1 and 8.2 of this report summarize the field sampling procedures for measuring arsenic in ambient air and stack gases, respectively. Section 8.3 describes the different analytical techniques used to analyze and measure the amount of arsenic collected in ambient air and stack gas samples.

8.1 Ambient Air Sampling Methods

Ambient air concentrations of arsenic can be measured using Methodology for the Determination of Suspended Particulate Matter in the Atmosphere (High-Volume Method) and modified Methodology for the Determination of Lead in Suspended Particulate Matter Collected From Ambient Air; and NIOSH Methods 7300, 7900, 7901 and 5022. The following methods are described in detail below.

8.1.1 Methodology for the Determination of Suspended Particulate Matter in the Atmosphere (High-Volume Method) and Modified Methodology for the Determination of Lead in Suspended Particulate Matter Collected from Ambient Air

A high volume sampler is used to collect total suspended particulate (TSP) matter. Figure 8-1 shows a simplified diagram of the components of the high-volume ambient air sampling equipment.[10] The equipment is mounted in an enclosed shelter equipped with a roof. Ambient air is drawn under the roof of the shelter through a pre-weighed glass-fiber filter. The high-volume sampler should be operated for 24 hours at an average flow rate of 1.7 cubic meters per minute (m^3/min). The approximate concentration range of the method is 2 to 750 $\mu g/m^3$. However, the lower limit is determined by the sensitivity of the balance used in the analysis by the laboratory, and the upper limit is affected by various factors, such as variability of filters used in the sampler, and particle size distribution of the sample.

After sampling, the filter is removed and sent to a laboratory for analysis. The method is then modified to prepare and analyze the high-volume filter sample for arsenic instead of lead. The filter is weighed several times until a constant weight is obtained and then the filter is digested in an acid solution and analyzed for total arsenic content either by atomic absorption spectrophotometry (AAS) or inductively coupled plasma (ICP) emission spectroscopy.

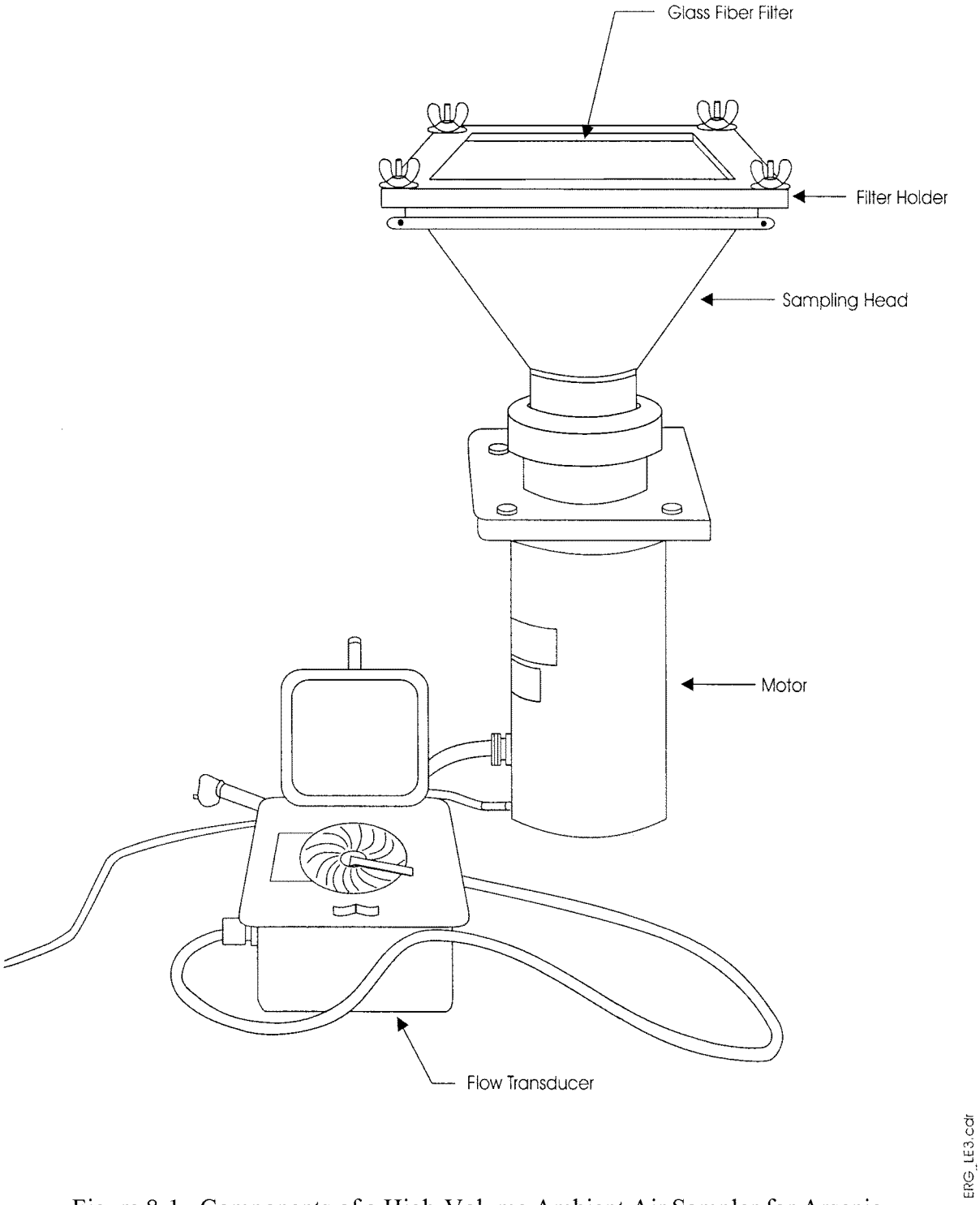

Figure 8-1. Components of a High-Volume Ambient Air Sampler for Arsenic

Source: Reference 10.

One advantage of the High-Volume Method (Appendix B) and the Appendix G Modified Lead Method is that the ambient air sample is collected over a 24-hour period, which can encompass all types of weather conditions, particularly temperature changes, and the range of emission source activities that occur throughout a 24-hour period.

One disadvantage of the high-volume sampling method is that it was designed for sampling only total inorganic arsenic compounds in suspended particulate matter (PM). Inorganic arsenic cannot be speciated and most organic arsenic compounds cannot be detected. A second disadvantage is that the high-volume method is very dependent on meteorological conditions. Any change in wind speed or direction and any amount of precipitation can influence the sample results. To interpret the effects of weather conditions on the sample results, meteorological data must be recorded during the sampling period.

8.1.2 NIOSH Method 7300 - Methodology for the Determination of Elements by Inductively Coupled Plasma (ICP)

Method 7300 can be used to sample for elemental arsenic and various metals in ambient air. This method collects particulate metals only. Samples are collected on a mixed cellulose ester membrane filter (MCEF), 0.8 µm pore size, 37 mm diameter, with a backup pad, placed into a cassette filter holder. A calibrated personal sampling pump is used to pull air through the cassette holder at a flow rate between 1 and 4 L/min for a total sample size of 200 to 2,000 L.

The filters and backup pads, housed inside the cassette, are sent to the laboratory for analysis. At the laboratory, the filters are ashed using a nitric acid/perchloric acid solution and diluted to a known final volume. After the initial sample preparation step, samples are analyzed by ICP or AAS at the specific wavelength for arsenic analysis.

Samples collected using NIOSH 7300 are relatively stable, but it is important not to exceed a filter loading of approximately 2 mg of total dust.

8.1.3 NIOSH Method 7900 - Methodology for the Determination of Arsenic and Compounds, as Arsenic, using Direct-Aspiration (Flame) Atomic Absorption Spectroscopy (AAS)

Method 7900 can be used to sample for arsenic in ambient air. This method collects only particulate arsenic and is an elemental analysis, not compound specific. Samples are collected on a MCEF, 0.8 µm pore size, 37 mm diameter, with a backup pad, placed into a cassette filter holder. A calibrated personal sampling pump is used to pull air through the cassette holder at a flow rate of between 1 and 3 L/min for a total sample size of 30 to 1,000 L.

The filters and backup pads, housed inside the cassette, are sent to the laboratory for analysis. At the laboratory, the filters are ashed using a nitric acid/perchloric acid solution and diluted to a known final volume. After the initial sample preparation step, samples are analyzed for arsenic by direct-aspiration (flame) AAS.

Samples collected using NIOSH 7900 are relatively stable if refrigerated, but it is important not to exceed a filter loading of approximately 2 mg total dust. Again, this method collects particulate arsenic only and not volatile organic arsenic compounds, such as arsenic trioxide.

8.1.4 NIOSH Method 7901 - Methodology for the Determination of Arsenic Trioxide, as Arsenic, by Graphite Furnace Atomic Absorption (GFAA)

Method 7901 can be used to sample for particulate arsenic compounds as well as arsenic trioxide vapor. Samples are collected on treated MCEFs, 0.8 µm pore size, 37 mm diameter, and a cellulose backup pad, placed into a cassette filter holder. The filter and backup pad is previously treated with a sodium carbonate/glycerol solution. A calibrated personal sampling pump is used to pull air through the cassette holder at a flow rate of between 1 and 3 L/min for a total sample size of 30 to 1,000 L.

The filters and backup pads, housed inside the cassette, are sent to the laboratory for analysis. At the laboratory, the filters and backup pads are digested on a hot plate using

concentrated nitric acid and 30 percent hydrogen peroxide. The samples are then diluted to a known final volume. After the initial sample preparation step, samples are analyzed for arsenic by GFAA.

Samples collected using NIOSH 7901 are relatively stable, but it is important not to exceed a filter loading of approximately 2 mg total dust.

8.1.5 NIOSH Method 5022 - Methodology for the Determination of Organo-Arsenic Compounds by Ion Chromatography (IC)/Graphite Furnace Atomic Absorption (GFAA)

Method 5022 can be used to sample for particulate organo-arsenic compounds. Samples are collected on a polytetrafluoroethylene (PTFE) backed membrane filter, 1 μm pore size, 37 mm diameter, with a backup pad, placed into a cassette filter holder. A calibrated personal sampling pump is used to pull air through the cassette holder at a flow rate between 1 and 3 L/min for a total sample volume of 50 to 1,000 L.

The filters and backup pads, housed inside the cassette, are sent to the laboratory for analysis. At the laboratory, the filter is sonicated and extracted in a sodium carbonate/sodium bicarbonate/sodium borohydride solution. The samples are then analyzed for organo-arsenic compounds by IC/GFAA.

8.2 Stationary Source Sampling Methods

Various methods are available for sampling stack gas concentrations of arsenic: EPA Method 29, EPA Method 108, EPA BIF Method, and CARB Methods 423 and Draft 436. These methods are described in this section.

8.2.1 EPA Method 29 - Determination of Metals Emissions from Stationary Sources

EPA Method 29 can be used to sample PM and total inorganic and organic arsenic compounds isokinetically from stack gases. The sampling train for Method 29 is a modification of the EPA Method 5[11] sampling train, and is shown in Figure 8-2.[12]

Particulate arsenic with a particle size diameter greater than or equal to 0.3 μm is collected through a glass nozzle and probe onto a pre-weighed glass fiber filter. Particulate arsenic with a particle size diameter less than 0.3 μm and arsenic compounds in the vapor phase pass through the filter and are collected in a dilute nitric acid/hydrogen peroxide solution contained in the train impingers. The nozzle/probe and both halves of the filter holder are washed with dilute nitric acid. The nozzle/probe wash, two separate filter holder washes, filter, and impinger solution are sent to a laboratory, where they are digested in an acid solution and analyzed for arsenic content either by AAS or ICP. The samples collected on the filter and in the impinger solution can be analyzed separately to differentiate between the amount of particulate arsenic and arsenic in the gaseous phase.

The exact run time and volume sampled varies from source to source depending on the required detection limit. Typically, the Method 29 train is run for 2 hours and collects approximately 2.55 m^3 of stack gas. According to the method, the ICP analytical detection limit is 53 ng/ml of total arsenic, and the GFAA analytical detection limit is 1 ng/ml. The upper range can be extended considerably by diluting the sample prior to analysis. However, actual sample analytical detection limits are sample dependent and may vary due to the sample matrix. Also, laboratory instrumentation may affect the detection limit.

Although it is the preferred method for sampling stack gas streams and can measure several metals at one time, the method cannot be used to speciate inorganic or organic arsenic compounds.

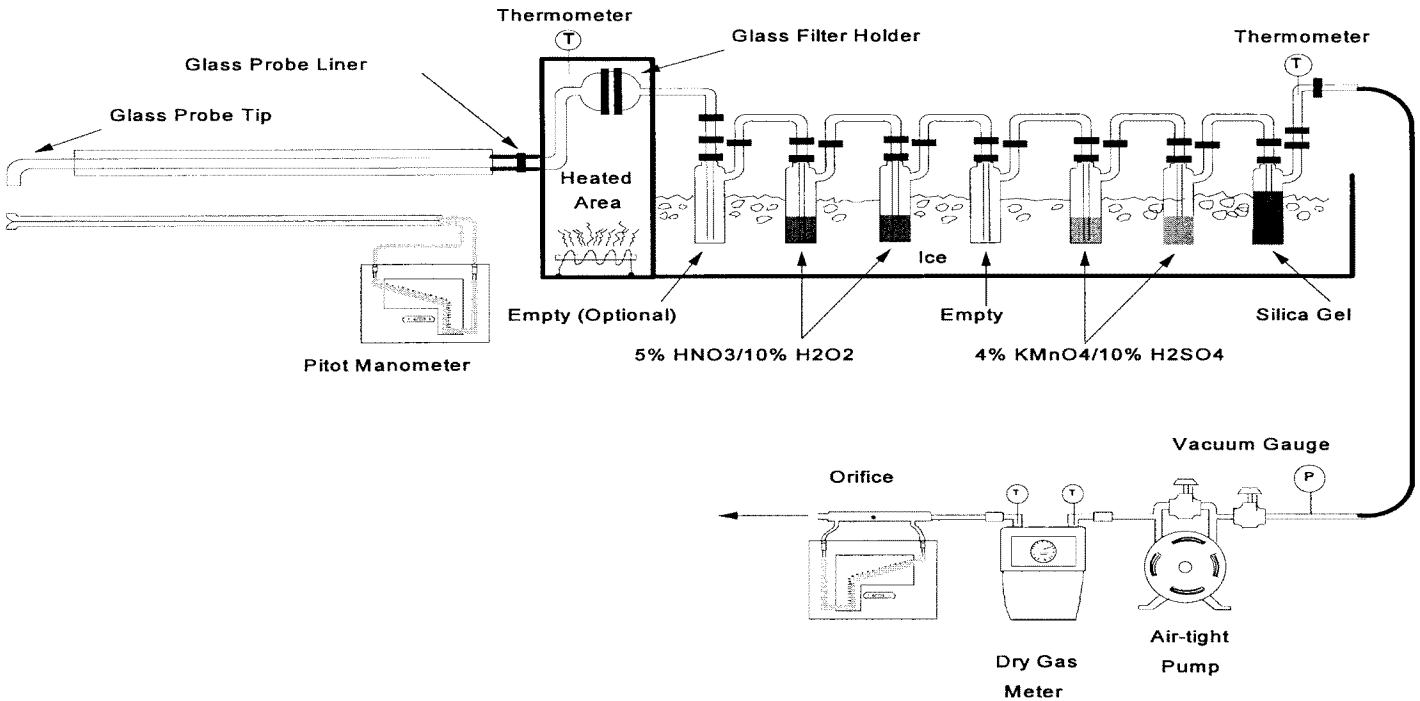

Figure 8-2. EPA Method 29, BIF Method, and CARB Draft Method 436 Sampling Train

Source: Reference 12.

8.2.2 EPA Method 108 - Methodology for the Determination of Particulate and Gaseous Arsenic Emissions

EPA Method 108 can be used to sample PM and total inorganic and organic arsenic compounds isokinetically from stack gases. The Method 108 sampling train is a modified EPA Method 5 sampling train and is shown in Figure 8-3.[8]

Particulate arsenic with a particle size diameter greater than or equal to 0.3 μm is collected through a glass nozzle and probe onto a pre-weighed glass fiber filter. Particulate arsenic with a particle size diameter less than 0.3 μm and arsenic compounds in the vapor phase pass through the filter and are collected in deionized water contained in the train impingers. The nozzle/probe, front half of the filter housing, and glassware containing the impinger solution are washed with a sodium hydroxide solution. The washes, filter, and impinger solution are sent to a laboratory, where they are digested in an acid solution and analyzed for arsenic content either by AAS or ICP. The samples collected on the filter and in the impinger solution can be analyzed separately to differentiate between the amount of particulate arsenic and gaseous arsenic.

The exact run time and volume sampled varies from source to source depending on the required detection limit. Actual sample analytical detection limits are sample dependent and may vary due to the sample matrix. Also, laboratory instrumentation may affect the detection limit.

8.2.3 EPA BIF Method Section 3.0 - Methodology for the Determination of Metals Emissions in Exhaust Gases from Hazardous Waste Incineration and Similar Combustion Processes

The EPA BIF method can be used to sample PM and total inorganic and organic arsenic compounds isokinetically from stack gases. The BIF method sampling train is a modified EPA Method 5 sampling train, and is identical to the Method 29 sampling train, and is shown is Figure 8-2.

The EPA BIF Method sampling, analytical procedures, and analytical detection limits are identical to Method 29; refer to Section 8.2.1 for the discussion.

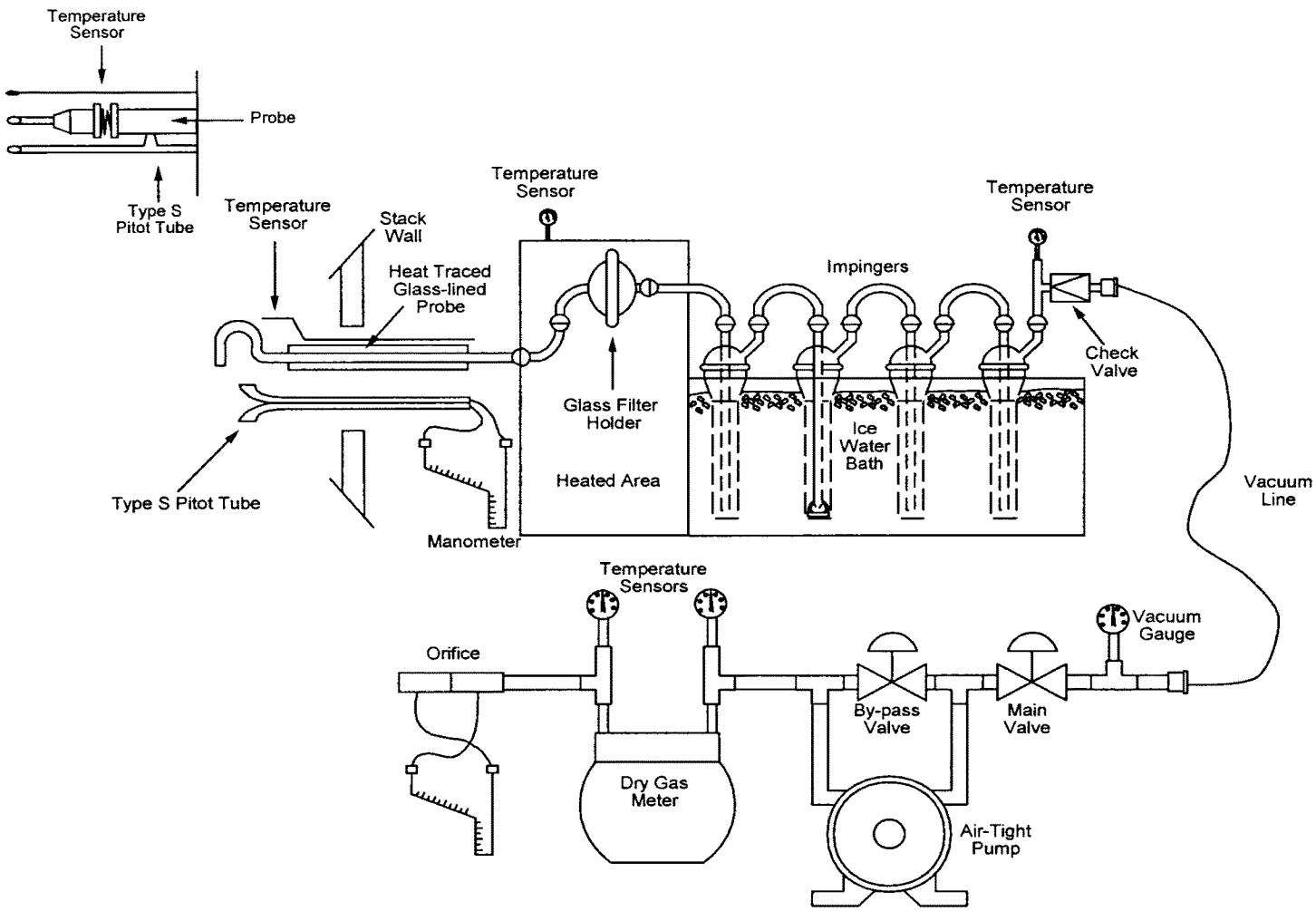

Figure 8-3. EPA Method 108 and CARB Method 423 Sampling Train

Source: Reference 8.

8.2.4 CARB Method 423 - Methodology for the Determination of Particulate and Gaseous Inorganic Arsenic Emissions from Stationary Sources

CARB Method 423 can be used to sample PM and total inorganic and organic arsenic compounds isokinetically from stack gases. The Method 423 sampling train is similar to EPA Method 5 sampling train, and is identical to the Method 108 sampling train, see Figure 8-3.

CARB Method 243 sampling and analytical procedures are identical to Method 108; refer to Section 8.2.2 for the discussion.

8.2.5 CARB Draft Method 436 - Determination of Multiple Metals Emissions from Stationary Sources

Draft Method 436 can be used to sample PM and total inorganic and organic arsenic compounds isokinetically from stack gases. The sampling train for Draft Method 436 is a modification of the EPA Method 5 sampling train, and is identical to EPA Method 29 (see Figure 8-2).

Draft Method 436 sampling, analytical procedures, and analytical detection limits are identical to EPA Method 29; refer to Section 8.2.1 for the discussion.

8.3 Analytical Techniques For The Measurement Of Arsenic

The most common technique for measuring total arsenic in samples is spectroscopy. The two spectroscopic techniques used most by environmental laboratories are AAS and ICP. AAS is the most common method used to measure total arsenic. The advantages to AAS are that the method is simple, rapid, and applicable to a large number of metals. Samples other than drinking water must be acid-digested prior to analysis. Three types of AAS methods for measuring total arsenic are direct aspiration (flame), graphite furnace, and hydride-generation.

The second most common technique for measuring total arsenic in samples is ICP, which allows simultaneous, or sequential, determination of several metals in a sample during a single analytical measurement. Samples must be acid-digested prior to analysis.

Although not as common, another technique for measuring arsenic in samples is ion chromatography (IC) connected to GFAA.

8.3.1 Direct Aspiration (Flame) Atomic Absorption Spectroscopy (AAS)

Method 7000[13] specifies the procedure for analyzing samples using direct-aspiration (flame) AAS. In direct-aspiration (flame) AAS, a sample is aspirated and atomized in an air/acetylene flame. A light beam from a hollow cathode lamp, whose cathode is made of the element being measured, is directed through the flame into a monochromator, and onto a detector that measures the amount of light absorbed. Absorption depends upon the presence of free, unexcited ground-state atoms in the flame. Because the wavelength of the light beam is characteristic of only the element being measured, the light energy absorbed by the flame is a measure of the concentration of that element in the sample. With flame AAS, if the proper flame and analytical conditions are not used, chemical and ionization interferences can occur. Flame AAS in normally performed as a single element analysis. If direct-aspiration (flame) AAS techniques do not provide adequate sensitivity, graphite furnace techniques can be used.

8.3.2 Graphite Furnace Atomic Absorption (GFAA) Spectroscopy

Method 7060[13] specifies the procedure for analyzing samples for total arsenic using graphite furnace AAS. The principal of graphite furnace AAS is essentially the same as for direct-aspiration (flame) AAS, except a furnace rather than a flame is used to atomize the sample. In graphite furnace AAS, a representative aliquot of a sample is placed in a graphite tube in the furnace, evaporated to dryness, charred, and atomized. The radiation from a given excited element is passed through the vapor containing ground-state atoms of that element. The intensity of the transmitted radiation decreases in proportion to the amount of the ground-state element in the vapor. The metal's atoms to be measured are placed in the beam of radiation by increasing

the temperature of the furnace, thereby causing the injected sample to be volatilized. A monochromator isolates the characteristic radiation from the hollow cathode lamp or electrodeless discharge lamp, and a photosensitive device measures the attenuated transmitted radiation.

The major advantage of GFAA is that it affords extremely low detection limits. It is the easiest technique to perform on relatively clean samples. Because this technique is so sensitive, however, interferences can be a problem; finding the optimum combination of digestion, heating times, and temperatures, and matrix modifiers can be difficult for complex matrices.

8.3.3 Inductively Coupled Plasma (ICP) Atomic Emission Spectroscopy

Method 6010[13] specifies the procedures for analyzing samples using ICP. The ICP method measures element-emitted light by optical spectrometry. The sample is nebulized and the resulting aerosol is transported to the plasma torch, where excitation occurs. Characteristic atomic-line emission spectra are produced by radio-frequency inductively coupled plasma. The spectra are dispersed by a grating spectrometer, and the intensities of the lines are monitored by photomultiplier tubes. The photocurrents from the photomultiplier tubes are processed and controlled by a computer.

The primary advantage of ICP is that it allows simultaneous or rapid sequential determination of many elements in a short time. The primary disadvantage is background radiation from other elements and the plasma gases. Although all ICP instruments utilize high-resolution optics and background correction to minimize these interferences, analysis for traces of metals in the presence of a large excess of a single metal is difficult.

8.3.4 Hydride Generation Atomic Absorption (HGAA) Spectroscopy

Method 7061[13] specifies the procedure for analyzing samples for total arsenic using HGAA. HGAA utilizes a chemical reduction to reduce and separate arsenic selectively from a digested sample along with standard AAS techniques.

The primary advantage of this technique is that arsenic can be isolated and quantitated from complex samples.

A disadvantage of HGAA is that significant interferences will occur when easily reduced metals are present, and/or when high concentrations of transition metals are present. Also, oxidizing agents, such as oxides of nitrogen, may remain after the sample has been digested.

8.3.5 Ion Chromatography (IC)/GFAA

NIOSH Method 5022 specifies the procedure for analyzing air samples for total arsenic using an IC connected to GFAA. Ion chromatography is a separation technique used for the analysis of ionic species. Separation of components in a sample can be achieved with the use of a mobile phase (eluent), and a stationary phase (a specific type of polymeric resin bed inside of a column). A sample analyte is introduced into the flowstream of the mobile phase (eluent) and is carried onto the stationary phase (column). The analyte then undergoes a separation process based on its affinity for either of the mobile or stationary phases.

With NIOSH Method 5022, the IC detector is bypassed, and the sample flows into an arsine generator where gaseous arsines are formed. A gas-liquid separator is then used to flow the sample into the GFAA where the sample is quantitated.

References for Section 8.0

1. National Institute for Occupational Safety and Health. NIOSH Method 7300. *NIOSH Manual of Analytical Methods*, 3rd edition. Cincinnati, Ohio: U.S. Department of Health, Education, and Welfare, February 15, 1984.

2. National Institute for Occupational Safety and Health. NIOSH Method 7900. *NIOSH Manual of Analytical Methods*, 3rd edition. Cincinnati, Ohio: U.S. Department of Health, Education, and Welfare, August 15, 1987.

3. National Institute for Occupational Safety and Health. NIOSH Method 5022. *NIOSH Manual of Analytical Methods*, 3rd edition. Cincinnati, Ohio: U.S. Department of Health, Education, and Welfare, May 15, 1985.

4. U.S. Code of Federal Regulations. Title 40, Protection of the Environment, Part 50, Appendix B--Reference Method for the Determination of Suspended Particulate Matter in the Atmosphere (High-volume Method). Washington, D.C.: U.S. Government Printing Office, 1994.

5. U.S. EPA. *Methodology for the Determination of Metals Emissions in Exhaust Gases from Hazardous Waste Incineration and Similar Combustion Sources*, 3rd ed., Test Methods for Evaluating Solid Waste: Physical/Chemical Methods, Method 12. SW-846. Washington, D.C.: U.S. Environmental Protection Agency, Office of Solid Waste and Emergency Response, September 1988.

6. U.S. Code of Federal Regulations. Title 40, Protection of the Environment, Part 61, Appendix B--Method 108, Determination of Particulate and Gaseous Arsenic Emissions. Washington, D.C.: U.S. Government Printing Office, 1991.

7. U.S. EPA. *Test Methods for Evaluating Solid Waste.* Report No. SW-846. EPA Draft Method 0012 - Multi-Metal Train. EPA/530-SW-91-010. U.S. Environmental Protection Agency, Office of Solid Waste, December 1990.

8. California Air Resources Board. *Stationary Source Test Methods, Volume III: Methods for Determining Emissions of Toxic Air Contaminants from Stationary Sources*. Method 423. Sacramento, CA: California Air Resources Board, September 12, 1987.

9. California Air Resources Board. *Stationary Source Test Methods, Volume III: Methods for Determining Emissions of Toxic Air Contaminants from Stationary Sources*. Method 436. Sacramento, CA: California Air Resources Board, March 24, 1992.

10. U.S. EPA. *APTI Course 435 Atmospheric Sampling,* Student Manual. EPA 450/2-80-004. Research Triangle Park, North Carolina: U.S. Environmental Protection Agency, September 1980. pp. 4-38 and 4-51.

11. U.S. Code of Federal Regulations. Title 40, Protection of the Environment, Part 60, Appendix B--Method 29, Determination of Metals Emissions from Stationary Sources. Washington, D.C.: U.S. Government Printing Office, 1994.

12. U.S. Code of Federal Regulations. Title 40, Protection of the Environment, Part 60, Appendix A: Methodology for the Determination of Metals Emissions in Exhaust Gases from Incineration and Similar Combustion Sources (Draft), Method 29. Washington, D.C.: U.S. Government Printing Office, 1992.

13. U.S. EPA. *Test Methods for Evaluating Solid Waste*, Volume IA: Lab Manual of Physical/Chemical Methods. Report No. SW-846. U.S. Environmental Protection Agency, September 1986.

#22 ' 0 &+ : ffi#

' / +55+1 0 ffi (#%6 1 4 ffi57 / / # 4 ; ffi6 # $. '

6#$. ' ffi#⌧!┤ffiffi57 / / #4 ; ffi1 (ffi ' / +55+1 0 ffi (#%6 1 4 5 ffi$; ffi5 1 7 4% ' ffi% . #55+(+%#6+1 0 ffi%1 & ' 5

5%% 0WODGT	’OKUUKQP 5PQWTEG	%QPVTQNNXKEG	#XGTCIG ’OKUUKQP (CEVQT	7PKVU	’OKUUKQP (CEVQT	’OKUUKQP (CEVQT 4CPIG 4CVKPI
⌧!⌧!↕⌧!!	9QQF 9CUVG ⌧(KTGF $FQKNGT $CTM (KTGF♂	0QPG	→┼↕Z!!	ND◀VQP	!!┼↕Z!! ⌧ ¶┼↕Z!!	%
⌧!⌧!↕⌧¶	9QQF 9CUVG ⌧(KTGF $FQKNGT 9QQF◀$CTM (KTGF♂	0QPG	→┼↕Z!!	ND◀VQP	!!┼↕Z!! ⌧ ¶┼↕Z!!	%
⌧!⌧!↕⌧┴	9QQF 9CUVG ⌧(KTGF $FQKNGT 9QQF (KTGF♂	0QPG	→┼↕Z!!	ND◀VQP	!!┼↕Z!! ⌧ ¶┼↕Z!!	%
⌧!⌧!↕⌧┴	9QQF 9CUVG ⌧(KTGF $FQKNGT 9QQF (KTGF♂	.KOGUVQPPGGLGEVKQP◀6JGTGGCN1Z YKVJ#OOQPKCPLGEVKQP◀9CVGT 6TGCVOGPV◀WNVKE[ENQPG◀((	├→Z!!	ND◀/$VW	→┼Z!! ⌧ !!┼Z!!	7
⌧¶⌧!↕⌧!!	9QQF 9CUVG ⌧(KTGF $FQKNGT $CTM (KTGF♫ ┤↕♫↕↕ ND UVGCO♂	0QPG	→┼↕Z!!	ND◀VQP	!!┼↕Z!! ⌧ ¶┼↕Z!!	%
⌧¶⌧!↕⌧¶	9QQF 9CUVG ⌧(KTGF $FQKNGT 9QQF◀$CTM (KTGF♫ ┤↕♫↕↕ ND UVGCO♂	0QPG	→┼↕Z!!	ND◀VQP	!!┼↕Z!! ⌧ ¶┼↕Z!!	%
⌧¶⌧!↕⌧┴	9QQF 9CUVG ⌧(KTGF $FQKNGT 9QQF (KTGF♫ ┤↕♫↕↕ ND UVGCO♂	9G\5ETWDDGTTGFKWOHHKEKGPE[	¶┼↕Z!!	ND◀/$VW	├¶↕Z!! ⌧ ┴┼↕Z!!	7
⌧¶⌧!↕⌧┴	9QQF 9CUVG ⌧(KTGF $FQKNGT 9QQF (KTGF♫ ┤↕♫↕↕ ND UVGCO♂	/WNVKRNG[ENQPG◀KVJQWV[#UU 4GKPLGEVKQP◀5ETWDDGTTGFKWO ’HHKEKGPE[	├¶↕Z!!	ND◀/$VW	↑┼↕Z!! ⌧ ←┼↕Z!!	7
⌧¶⌧!↕⌧┴	9QQF 9CUVG ⌧(KTGF $FQKNGT 9QQF (KTGF♫ ┤↕♫↕↕ ND UVGCO♂	/WNVKRNG[ENQPG◀KVJQWV[#UU 4GKPLGEVKQP	├┼↕Z!!	ND◀/$VW	→┼↕Z!! ⌧ ¶┼↕Z!!	7
⌧¶⌧!↕⌧┴	9QQF 9CUVG ⌧(KTGF $FQKNGT 9QQF (KTGF♫ ┤↕♫↕↕ ND UVGCO♂	/WNVKRNG[ENQPG◀KVJQWV[#UU 4GKPLGEVKQP◀5ETWDDGTTGFKWOHHKEKGPE[	┼¶↕Z!!	ND◀/$VW	┼¶↕Z!! ⌧ ↑┼↕Z!!	7
⌧¶⌧!↕⌧┴	9QQF 9CUVG ⌧(KTGF $FQKNGT 9QQF (KTGF♫ ┤↕♫↕↕ ND UVGCO♂	0QPG	→┼↕Z!!	ND◀VQP	!!┼↕Z!! ⌧ ¶┼↕Z!!	%
⌧¶⌧!↕⌧┬	9QQF 9CUVG ⌧(KTGF $FQKNGT $CTM (KTGF♫ ┤↕♫↕↕ ND UVGCO♂	0QPG	→┼↕Z!!	ND◀VQP	!!┼↕Z!! ⌧ ¶┼↕Z!!	%

6#$. ' ffi#⌧!┼ffiffi%1 06+07 ' &

5%% 0WODGT	'OKUUKQP 5PQWTEG	%QPVTQNGXKEG	#XGTCIG 'OKUUKQP (CEVQT	7PKVU	'OKUUKQP (CEVQT	'OKUUKQP (CEVQT 4CPIG 4CVKPI
⌧⌧⌧⌧→⌧┤	9QQF 9CUVG⌧(KTGF $FQKNGT 9QQF◀$CTM⌧(KTGF♬ ┤♬⌧ ND UVGCO♂	0QPG	→┼↕Z!⌧	ND◀VQP	!⌧┼↕Z!⌧ ⌧ ¶⌧┼↕Z!⌧	%
⌧⌧⌧⌧→⌧↑	9QQF 9CUVG⌧(KTGF $FQKNGT 9QQF (KTGF♬ ┤♬⌧ ND UVGCO♂	/WNVKRNG ENQPG KVJQW[#UU 4GKPLGEVKQP	!⌧!↕Z!⌧	ND◀/$VW	┼↕↕Z!⌧ ⌧ !⌧↑↕Z!⌧	7
⌧⌧⌧⌧→⌧↑	9QQF 9CUVG⌧(KTGF $FQKNGT 9QQF (KTGF♬ ┤♬⌧ ND UVGCO♂	0QPG	→┼↕Z!⌧	ND◀VQP	!⌧┼↕Z!⌧ ⌧ ¶⌧┼↕Z!⌧	%
⌧⌧⌧⌧→⌧↑	9QQF 9CUVG⌧(KTGF $FQKNGT 9QQF (KTGF♬ ┤♬⌧ ND UVGCO♂	5ETWDDGT	┼┼┼Z!⌧	ND◀/$VW	¶⌧┼↕Z!⌧ ⌧ ⌧ !⌧↑↕Z!⌧ ⌧	7
⌧⌧⌧⌧→⌧├	9QQF 9CUVG⌧(KTGF $FQKNGT 9QQF %QIGPGTCVKQP♂	0QPG	→┼↕Z!⌧	ND◀VQP	!⌧┼↕Z!⌧ ⌧ ¶⌧┼↕Z!⌧	%
⌧⌧┴⌧⌧→⌧!!	9QQF◀$CTM⌧(KTGF $FQKNGT $CTM⌧(KTGF♂	0QPG	→┼↕Z!⌧	ND◀VQP	!⌧┼↕Z!⌧ ⌧ ¶⌧┼↕Z!⌧	%
⌧⌧┴⌧⌧→⌧¶	9QQF◀$CTM⌧(KTGF $FQKNGT 9QQF◀$CTM⌧(KTGF♂	0QPG	→┼↕Z!⌧	ND◀VQP	!⌧┼↕Z!⌧ ⌧ ¶⌧┼↕Z!⌧	%
⌧⌧┴⌧⌧→⌧┴	9QQF◀$CTM⌧(KTGF $FQKNGT 9QQF⌧(KTGF♂	0QPG	→┼↕Z!⌧	ND◀VQP	!⌧┼↕Z!⌧ ⌧ ¶⌧┼↕Z!⌧	%
⌧⌧!⌧⌧!⌧¶	#PVJTCEK\%QCN TCXGNKPI PTCVG 1XGTHGGF 5VQMGT	0QPG	!⌧←↕Z!⌧	ND◀/QP	0&⌧ ¶⌧┼↕Z!⌧	
⌧⌧!⌧⌧¶⌧!!	$KVWOKPO\%QCN WNXGTK\%FQCN 9G\$QVVQO	0QPG	┼┼→Z!⌧	ND◀/$VW	⌧⌧⌧	'
⌧⌧!⌧⌧¶⌧¶	$KVWOKPO\%QCN WNXGTK\%FQCN &T[$QVVQO	0QPG	↑┼→Z!⌧	ND◀/$VW	⌧⌧⌧	'
⌧⌧!⌧⌧¶⌧┴	$KVWOKPO\%QCN [ENQPQ/[VTPCEG	0QPG	!⌧┼↕Z!⌧	ND◀/$VW	⌧⌧⌧	'
⌧⌧!⌧⌧¶⌧┬	$KVWOKPO\%QCN RTGCFGT 5VQMGT	0QPG	⌧⌧⌧	ND◀/$VW	¶⌧┼↕Z!⌧ ⌧ ┼┼↕Z!⌧	'
⌧⌧!⌧⌧¶⌧┤	$KVWOKPO\%QCN TCXGNKPI PTCVG 1XGTHGGF 5VQMGT	0QPG	⌧⌧⌧	ND◀/$VW	┼┼↕Z!⌧ ⌧ !⌧↕Z!⌧	'

⌧⌧ #

6#$. ' ffi#⌧!⌧ffiffi%1 06+07 ' &

5%% 0WODGT	'OKUUKQP 5RQWTEG	%QPVTQNXKEG	#XGTCIG 'OKUUKQP (CEVQT	7PKVU	'OKUUKQP (CEVQT	'OKUUKQP (CEVQT 4CPIG 4CVKPI
⌧⌧⌧⌧⌧	5WDDKVWOKPQ%QCN9G\$QVVQO	0QPG	⌧⌧⌧	ND◀/$VW	⌧⌧⌧	'
⌧⌧⌧⌧⌧	5WDDKVWOKPQ%QCN&T[$QVVQO	0QPG	⌧⌧⌧	ND◀/$VW	⌧⌧⌧	'
⌧⌧⌧⌧⌧	5WDDKVWOKPQ%QCN%[ENQPG(WTPCEG	0QPG	⌧⌧⌧	ND◀/$VW	⌧⌧⌧	'
⌧⌧⌧⌧⌧	5WDDKVWOKPQ%QCN5RTGCFGT5VQMGT	0QPG	⌧⌧⌧	ND◀/$VW	⌧⌧⌧ ⌧⌧⌧	'
⌧⌧⌧⌧⌧	5WDDKVWOKPQ%QCN6TCXGNKPI)TCVG1XGTHGGF5VQMGT	0QPG	⌧⌧⌧	ND◀/$VW	⌧⌧⌧ ⌧⌧⌧	'
⌧⌧⌧⌧	.KIPKVG%QCN2WNXGTK\%QCN9GV$QVVQO	0QPG	⌧⌧⌧	ND◀/$VW	⌧⌧⌧	'
⌧⌧⌧⌧	.KIPKVG%QCN2WNXGTK\%QCN&T[$QVVQO	0QPG	⌧⌧⌧	ND◀/$VW	⌧⌧⌧	'
⌧⌧⌧⌧⌧	.KIPKVG%QCN%[ENQPG(WTPCEG	0QPG	⌧⌧⌧	ND◀/$VW	⌧⌧⌧ ⌧⌧⌧	'
⌧⌧⌧⌧⌧	.KIPKVG%QCN6TCXGNKPI)TCVG1XGTHGGF5VQMGT	0QPG	⌧⌧⌧	ND◀/$VW	⌧⌧⌧ ⌧⌧⌧	'
⌧⌧⌧⌧⌧	.KIPKVG%QCN5RTGCFGT5VQMGT	0QPG	⌧⌧⌧	ND◀/$VW	⌧⌧⌧ ⌧⌧⌧	'
⌧⌧⌧⌧⌧	#PVJTCEKVG%QCN6TCXGNKPI)TCVG1XGTHGGF5VQMGT	0QPG	⌧⌧⌧	ND◀/QP	0&⌧ ⌧⌧⌧	
⌧⌧⌧⌧⌧	$KVWOKPQ%QCN2WNXGTK\%QCN9G\$QVVQO	0QPG	⌧⌧⌧	ND◀/$VW	⌧⌧⌧	'
⌧⌧⌧⌧⌧	$KVWOKPQ%QCN2WNXGTK\%QCN&T[$QVVQO	0QPG	⌧⌧⌧	ND◀/$VW	⌧⌧⌧	'
⌧⌧⌧⌧⌧	$KVWOKPQ%QCN%[ENQPG(WTPCEG	0QPG	⌧⌧⌧	ND◀/$VW	⌧⌧⌧	'
⌧⌧⌧⌧⌧	$KVWOKPQ%QCN5RTGCFGT5VQMGT	0QPG	⌧⌧⌧	ND◀/$VW	⌧⌧⌧ ⌧⌧⌧	'

6#$.'ffi#¤‼┤ffiffi%106+07'&

5%% 0WODGT	'OKUUKQP 5QWTEG	%QPVTCEVQT	#XGTCIG 'OKUUKQP (CEVQT	7PKVU	'OKUUKQP (CEVQT 4CPIG	'OKUUKQP (CEVQT 4CPIG
‼¤¶¤↕¶¤┤	$KVWOKPQWU%QCN6CPIGPVKCN)TCVG 1XGTHGGF5VQMGT	0QPG	¤¤¤	ND◄/$VW	┼┼¶Z‼↕ ¤ ‼┼↕Z‼↕	'
‼¤¶¤↕¶¤↑	$KVWOKPQWU%QCN7PFGTHGGF5VQMGT	0QPG	├←↕Z‼↕	ND◄/$VW	¤¤¤	7
‼¤¶¤↕¶¤┴	5WDDKVWOKPQWU%QCN5RTGCFGT 5VQMGT	0QPG	├┬Z‼↕	ND◄/$VW	¤¤¤	7
‼¤¶¤↕¶¤¶‼	5WDDKVWOKPQWU%QCN2WNXGTK\GF %QCN9GV$QVVQO	0QPG	┼┴Z‼↕	ND◄/$VW	¤¤¤	'
‼¤¶¤↕¶¤¶¶	5WDDKVWOKPQWU%QCN2WNXGTK\GF %QCN&T[$QVVQO	0QPG	↑←Z‼↕	ND◄/$VW	¤¤¤	'
‼¤¶¤↕¶¤¶┴	5WDDKVWOKPQWU%QCN%[ENQPG (WTPCEG	0QPG	‼┼‼Z‼↕	ND◄/$VW	¤¤¤	'
‼¤¶¤↕¶¤¶┬	5WDDKVWOKPQWU%QCN5RTGCFGT 5VQMGT	0QPG	¤¤¤	ND◄/$VW	¶┼↑┬Z‼↕ ¤ ┼┼¶Z‼↕	'
‼¤¶¤↕¶¤¶┤	5WDDKVWOKPQWU%QCN6CPIGPVKCN)TCVG 1XGTHGGF5VQMGT	0QPG	¤¤¤	ND◄/$VW	┼┼¶Z‼↕ ¤ ‼┼↕Z‼↕	'
‼¤┴¤↕‼¤¶	#PVJTCEKVG%QCN6CPIGPVKCN)TCVG 1XGTHGGF5VQMGT	0QPG	‼←↕Z‼↕	ND◄/QP	0&¤ ¶┼↕Z‼↕	
‼¤┴¤↕¶¤┴	$KVWOKPQWU%QCN%[ENQPG (WTPCEG	0QPG	‼┼‼Z‼↕	ND◄/$VW	¤¤¤	'
‼¤┴¤↕¶¤┤	$KVWOKPQWU%QCN2WNXGTK\GF %QCN 9GV$QVVQO	0QPG	┼┴Z‼↕	ND◄/$VW	¤¤¤	'
‼¤┴¤↕¶¤↑	$KVWOKPQWU%QCN2WNXGTK\GF %QCN &T[$QVVQO	0QPG	↑←Z‼↕	ND◄/$VW	¤¤¤	'
‼¤┴¤↕¶¤├	$KVWOKPQWU%QCN1XGTHGGF5VQMGT	0QPG	¤¤¤	ND◄/$VW	┼┼¶Z‼↕ ¤ ‼┼↕Z‼↕	'
‼¤┴¤↕¶¤→	$KVWOKPQWU%QCN7PFGTHGGF5VQMGT	5KPING%[ENQPG	¶┼Z‼↕	ND◄/$VW	¤¤¤	7
‼¤┴¤↕¶¤←	$KVWOKPQWU%QCN5RTGCFGT5VQMGT	0QPG	¤¤¤	ND◄/$VW	¶┼↑┬Z‼↕ ¤ ┼┼¶Z‼↕	'
‼¤┴¤↕¶¤¶‼	5WDDKVWOKPQWU%QCN2WNXGTK\GF %QCN9GV$QVVQO	0QPG	┼┴Z‼↕	ND◄/$VW	¤¤¤	'

#¤┤

6#$. ' ffi#⌧!⌧ffiffi%1 06+07 ' &

5%% 0WODGT	'OKUUKQP 5RQWTEG	%QPVTCEVQT	#XGTCIG 'OKUUKQP (CEVQT	7PKVU	'OKUUKQP (CEVQT	'OKUUKQP (CEVQT 4CVKPI
⌧⌧⌧⌧⌧⌧	5WDDKVWOKP%QCN&T[$QVVQO	0QPG	↑⌧⌧Z⌧↕	ND◀/$VW	⌧⌧⌧	'
⌧⌧⌧⌧⌧⌧	5WDDKVWOKP%QCN&T[ENQPG (WTPCEG	0QPG	⌧⌧⌧Z⌧↕	ND◀/$VW	⌧⌧⌧	'
⌧⌧⌧⌧⌧⌧	5WDDKVWOKP%QCN&T[RTGCFGT 5VQMGT	0QPG	⌧⌧⌧	ND◀/$VW	⌧⌧⌧Z⌧↕ ⌧⌧⌧Z⌧↕	'
⌧⌧⌧⌧⌧⌧	5WDDKVWOKP%QCN&TCXGNKPI)TCVG 1XGTHGGFVQMGT	0QPG	⌧⌧⌧	ND◀/$VW	⌧⌧⌧Z⌧↕ ⌧⌧⌧Z⌧↕	'
⌧⌧⌧⌧⌧⌧	4GUKFWCN)TCFG 1KN 0QTOCN (KTKPI	0QPG	⌧⌧⌧	ND◀/$VW	⌧⌧⌧Z⌧↕ ⌧⌧⌧Z⌧↕	'
⌧⌧⌧⌧⌧⌧	4GUKFWCN)TCFG 1KN 0QTOCN (KTKPI	(NWO)CU4GEKTEWNCVKQP	⌧⌧⌧Z⌧↕	ND◀/$VW	⌧⌧⌧Z⌧↕ ⌧⌧⌧Z⌧↕	7
⌧⌧⌧⌧⌧⌧	4GUKFWCN)TCFG 1KN 6CPIGPVKCN(KTKPI	0QPG	⌧⌧⌧	ND◀/$VW	⌧⌧⌧Z⌧↕ ⌧⌧⌧Z⌧↕	'
⌧⌧⌧⌧⌧⌧	4GUKFWCN)TCFG 1KN 0QTOCN (KTKPI	0QPG	↑⌧⌧Z⌧↕	ND◀/$VW	⌧⌧⌧	7
⌧⌧⌧⌧⌧⌧	&KUVKNNCNWKN)TCFGU CPF¶ 1KN	0QPG	⌧⌧⌧Z⌧↕	ND◀/$VW	⌧⌧⌧	
⌧⌧⌧⌧⌧⌧	4GUKFWCN)TCFG 1KN	0QPG	⌧⌧⌧	ND◀/$VW	⌧⌧⌧Z⌧↕ ⌧⌧⌧Z⌧↕	'
⌧⌧⌧⌧⌧⌧	&KUVKNNCNWKN)TCFGU CPF¶ 1KN	0QPG	⌧⌧⌧Z⌧↕	ND◀/$VW	⌧⌧⌧	
⌧⌧⌧⌧⌧⌧	9CUVG1KN #KT#VQOK\GFWTPGT	0QPG	↑⌧↕Z⌧↕	ND◀⌧↕↕)CN	⌧⌧⌧	&
⌧⌧⌧⌧⌧⌧	9CUVG1KN 8CRQTK\KFWTPGT	0QPG	⌧⌧↕Z⌧↕	ND◀⌧↕↕)CN	⌧⌧⌧	&
⌧⌧⌧⌧⌧⌧	9CUVG1KN 5OCNNQKNGTU	0QPG	⌧⌧↕Z⌧↕	ND◀⌧↕↕)CN	⌧⌧⌧	&
⌧⌧⌧⌧⌧⌧	9CUVG1KN #KT#VQOK\GFWTPGT	0QPG	↑⌧↕Z⌧↕	ND◀⌧↕↕)CN	⌧⌧⌧	&
⌧⌧⌧⌧⌧⌧	9CUVG1KN 8CRQTK\KFWTPGT	0QPG	⌧⌧↕Z⌧↕	ND◀⌧↕↕)CN	⌧⌧⌧	&
⌧⌧⌧⌧⌧⌧	5QNKF9CUVG	'52	↑⌧⌧Z⌧↕	ND◀VQP	⌧⌧⌧Z⌧↕ ⌧⌧⌧Z⌧↕	7

⌧#

6#$. ' ffi#⅜!⅛ffiffi%1 0 6+0 7 ' &

5%% 0WODGT	'OKUUKQP 5RQWTEG	%QPVTQNXKEG	#XGTCIG 'OKUUKQP (CEVQT	7PKVU	'OKUUKQP (CEVQT	'OKUUKQP (CEVQT 4CVKPI
⅛⅜⅛⅜!!	*C\CTFQWUCUVG	#DUQTDGT◀5EWDDGTU	↑⅛¶Z!!↕	ND◀ND	⅛⅛¶Z!!↕ ⅜ ⅛⅛¶Z!!↕	7
⅛⅜!⅜↕!⅜!!	5VCTXGT#KT /WNVKRNGCODGT	0QPG	↑⅛←Z!!↕	ND◀VQP	⅜⅜⅜	%
⅛⅜!⅜↕!⅜!!	5VCTXGT#KT /WNVKRNGCODGT	'52	!!⅛↓⅛Z!!↕	ND◀VQP	⅜⅜⅜	&
⅛⅜!⅜↕!⅜⅛	4GHWL&GTKXGVWGN	0QPG	⅛←¬Z!!↕	ND◀VQP	⅜⅜⅜	$
⅛⅜!⅜↕!⅜⅛	4GHWL&GTKXGVWGN	'52	!!⅛⅛¬Z!!↕	ND◀VQP	⅜⅜⅜	&
⅛⅜!⅜↕!⅜⅛	4GHWL&GTKXGVWGN	5RTC[&T[GT◀(	⅛⅛!⅛Z!!↕	ND◀VQP	⅜⅜⅜	#
⅛⅜!⅜↕!⅜⅛	4GHWL&GTKXGVWGN	5RTC[&T[GT◀52	!!⅛↓⅛Z!!↕	ND◀VQP	⅜⅜⅜	&
⅛⅜!⅜↕!⅜⅛	/CUU$WTI#GHTCEVQT9CVCNN %QODWUVQT	0QPG	⅛⅛⅛Z!!↕	ND◀VQP	⅜⅜⅜	#
⅛⅜!⅜↕!⅜⅛	/CUU$WTI#GHTCEVQT9CVCNN %QODWUVQT	5RTC[&T[GT◀(	⅛⅛¶Z!!↕	ND◀VQP	⅜⅜⅜	#
⅛⅜!⅜↕!⅜⅛	/CUU$WTI#GHTCEVQT9CVCNN %QODWUVQT	5RTC[&T[GT◀52	!!⅛⅛⅛Z!!↕	ND◀VQP	⅜⅜⅜	#
⅛⅜!⅜↕!⅜⅛	/CUU$WTI#GHTCEVQT9CVCNN %QODWUVQT	&T[5QTDGP◀VPLGEVKQP◀(	!!⅛↓⅛Z!!↕	ND◀VQP	⅜⅜⅜	%
⅛⅜!⅜↕!⅜⅛	/CUU$WTI#GHTCEVQT9CVCNN %QODWUVQT	'52	¶!!⅛Z!!↕	ND◀VQP	⅜⅜⅜	#
⅛⅜!⅜↕!⅜⅛	/CUU$WTI9CVGTYCNN%QODWUVQT	0QPG	⅛⅛⅛Z!!↕	ND◀VQP	⅜⅜⅜	#
⅛⅜!⅜↕!⅜⅛	/CUU$WTI9CVGTYCNN%QODWUVQT	5RTC[&T[GT◀(	⅛⅛¶Z!!↕	ND◀VQP	⅜⅜⅜	#
⅛⅜!⅜↕!⅜⅛	/CUU$WTI9CVGTYCNN%QODWUVQT	5RTC[&T[GT◀52	!!⅛⅛⅛Z!!↕	ND◀VQP	⅜⅜⅜	#
⅛⅜!⅜↕!⅜⅛	/CUU$WTI9CVGTYCNN%QODWUVQT	&T[5QTDGP◀VPLGEVKQP◀(	!!⅛↓⅛Z!!↕	ND◀VQP	⅜⅜⅜	%
⅛⅜!⅜↕!⅜⅛	/CUU$WTI9CVGTYCNN%QODWUVQT	'52	¶!!⅛Z!!↕	ND◀VQP	⅜⅜⅜	#
⅛⅜!⅜↕!⅜↑	/CUU$WTI#QVCT9CVGTYCNN %QODWUVQT	0QPG	⅛⅛⅛Z!!↕	ND◀VQP	⅜⅜⅜	#
⅛⅜!⅜↕!⅜↑	/CUU$WTI#QVCT9CVGTYCNN %QODWUVQT	5RTC[&T[GT◀(	⅛⅛¶Z!!↕	ND◀VQP	⅜⅜⅜	#
⅛⅜!⅜↕!⅜↑	/CUU$WTI#QVCT9CVGTYCNN %QODWUVQT	5RTC[&T[GT◀52	!!⅛⅛⅛Z!!↕	ND◀VQP	⅜⅜⅜	#

6#$.'ffi#☼!┤ffiffi%106+07'&

5%% 0WODGT	'OKUUKQP 5QWTEG	%QPVTQN XGXKEG	#XGTCIG 'OKUUKQP (CEVQT	7PKVU	'OKUUKQP (CEVQT	4CPIG	'OKUUKQP (CEVQT 4CVKPI
┤☼!!☼↕!!☼↑	/CUU$WTP 4QVCT 9CVGTYCNN %QODWUVQT	&T[5QTDGP-V PLGEVKQP◄((	!┤↕Z!↕	ND◄VQP	☼☼☼		%
┤☼!!☼↕!!☼↑	/CUU$WTP 4QVCT 9CVGTYCNN %QODWUVQT	'52	¶┤!Z!↕	ND◄VQP	☼☼☼		#
┤☼!!☼↕!!☼├	/QFWNCT ZEGU# #KT%QODWUVQT	0QPG	┤┴Z!↕	ND◄VQP	☼☼☼		#
┤☼!!☼↕!!☼├	/QFWNCT ZEGU# #KT%QODWUVQT	5RTC[&T[GT◄((	┤¶Z!↕	ND◄VQP	☼☼☼		#
┤☼!!☼↕!!☼├	/QFWNCT ZEGU# #KT%QODWUVQT	5RTC[&T[GT◄'52	!┤┴Z!↕	ND◄VQP	☼☼☼		#
┤☼!!☼↕!!☼├	/QFWNCT ZEGU# #KT%QODWUVQT	&T[5QTDGP-V PLGEVKQP◄((	!┤↕Z!↕	ND◄VQP	☼☼☼		%
┤☼!!☼↕!!☼├	/QFWNCT ZEGU# #KT%QODWUVQT	'52	¶┤!Z!↕	ND◄VQP	☼☼☼		#
┤☼┴☼↕!!☼!!!	/CUU$WTP 4GHTCEVQT 9CNN %QODWUVQT	0QPG	┤┴Z!↕	ND◄VQP	☼☼☼		#
┤☼┴☼↕!!☼!!!	/CUU$WTP 4GHTCEVQT 9CNN %QODWUVQT	5RTC[&T[GT◄((	┤¶Z!↕	ND◄VQP	☼☼☼		#
┤☼┴☼↕!!☼!!!	/CUU$WTP 4GHTCEVQT 9CNN %QODWUVQT	5RTC[&T[GT◄'52	!┤┴Z!↕	ND◄VQP	☼☼☼		#
┤☼┴☼↕!!☼!!!	/CUU$WTP 4GHTCEVQT 9CNN %QODWUVQT	&T[5QTDGP-V PLGEVKQP◄((	!┤↕Z!↕	ND◄VQP	☼☼☼		%
┤☼┴☼↕!!☼!!!	/CUU$WTP 4GHTCEVQT 9CNN %QODWUVQT	'52	¶┤!Z!↕	ND◄VQP	☼☼☼		#
┤☼┴☼↕!!☼!¶	/CUU$WTP 9CVGTYCNN %QODWUVQT	0QPG	┤┴Z!↕	ND◄VQP	☼☼☼		#
┤☼┴☼↕!!☼!¶	/CUU$WTP 9CVGTYCNN %QODWUVQT	5RTC[&T[GT◄((	┤¶Z!↕	ND◄VQP	☼☼☼		#
┤☼┴☼↕!!☼!¶	/CUU$WTP 9CVGTYCNN %QODWUVQT	5RTC[&T[GT◄'52	!┤┴Z!↕	ND◄VQP	☼☼☼		#
┤☼┴☼↕!!☼!¶	/CUU$WTP 9CVGTYCNN %QODWUVQT	&T[5QTDGP-V PLGEVKQP◄((	!┤↕Z!↕	ND◄VQP	☼☼☼		%
┤☼┴☼↕!!☼!¶	/CUU$WTP 9CVGTYCNN %QODWUVQT	'52	¶┤!Z!↕	ND◄VQP	☼☼☼		#

#☼┤

6#$. ' ffi#⌧!┼ffiffi%1 0 6+0 7 ' &

5%% 0WODGT	'OKUUKQP 5RQWTEG	%QPVTQNGXKEG	#XGTCIG 'OKUUKQP (CEVQT	7PKVU	'OKUUKQP (CEVQT	4CPIG	'OKUUKQP (CEVQT 4CVKPI
┼⌧┼⌧┼!⌧!┼	/CUU$WTH4QVCT9CVGTYCNN %QODWUVQT	0QPG	┼┼┼Z!⌧	ND◀VQP	⌧⌧		#
┼⌧┼⌧┼!⌧!┼	/CUU$WTH4QVCT9CVGTYCNN %QODWUVQT	5RTC[&T[GT◀((	┼┼┼Z!⌧	ND◀VQP	⌧⌧		#
┼⌧┼⌧┼!⌧!┼	/CUU$WTH4QVCT9CVGTYCNN %QODWUVQT	5RTC[&T[GT◀52	!┼┼┼Z!⌧	ND◀VQP	⌧⌧		#
┼⌧┼⌧┼!⌧!┼	/CUU$WTH4QVCT9CVGTYCNN %QODWUVQT	&T[5QTDGP◀VPLGEVKQP◀((	!┼┼⌧Z!⌧	ND◀VQP	⌧⌧		%
┼⌧┼⌧┼!⌧!┼	/CUU$WTH4QVCT9CVGTYCNN %QODWUVQT	'52	¶┼!┼Z!⌧	ND◀VQP	⌧⌧		#
┼⌧┼⌧┼!⌧!┼	/QFWNC5VVCTXGF⌧CKT%QODWUVQT	0QPG	↑┼┼Z!⌧	ND◀VQP	⌧⌧		%
┼⌧┼⌧┼!⌧!┼	/QFWNC5VVCTXGF⌧CKT%QODWUVQT	'52	!┼┼Z!⌧	ND◀VQP	⌧⌧		&
┼⌧┼⌧┼!⌧!┼	/QFWNCZEGUU⌧CKT%QODWUVQT	0QPG	┼┼┼Z!⌧	ND◀VQP	⌧⌧		#
┼⌧┼⌧┼!⌧!┼	/QFWNCZEGUU⌧CKT%QODWUVQT	5RTC[&T[GT◀((	┼┼┼Z!⌧	ND◀VQP	⌧⌧		#
┼⌧┼⌧┼!⌧!┼	/QFWNCZEGUU⌧CKT%QODWUVQT	5RTC[&T[GT◀52	!┼┼┼Z!⌧	ND◀VQP	⌧⌧		#
┼⌧┼⌧┼!⌧!┼	/QFWNCZEGUU⌧CKT%QODWUVQT	&T[5QTDGP◀VPLGEVKQP◀((	!┼┼⌧Z!⌧	ND◀VQP	⌧⌧		%
┼⌧┼⌧┼!⌧!┼	/QFWNCZEGUU⌧CKT%QODWUVQT	'52	¶┼!┼Z!⌧	ND◀VQP	⌧⌧		#
┼⌧!⌧┼┼⌧↑	5NWFIG5PEKPGTCVQT	0QPG	↑┼⌧Z!⌧	ND◀VQP	┼⌧Z!⌧	⌧ ┼⌧Z!⌧	7
┼⌧!⌧┼┼⌧!┼	/WNVKRN%GCTV4WTPCEG	0QPG	←┼┼Z!⌧	ND◀VQP	⌧⌧		$
┼⌧!⌧┼┼⌧!┼	/WNVKRN%GCTV4WTPCEG	5KPINC%[ENQPG◀8GPVWTKWDDGT	¶┼┼Z!⌧	ND◀VQP	⌧⌧		'
┼⌧!⌧┼┼⌧!┼	/WNVKRN%GCTV4WTPCEG	((	↑┼┼Z!⌧	ND◀VQP	⌧⌧		'
┼⌧!⌧┼┼⌧!┼	/WNVKRN%GCTV4WTPCEG	8GPVWTKWDDGT◀+ORKPIGQRGV 9GV5ETWDDGT◀#HVGTDWTPGT	→┼⌧Z!⌧	ND◀VQP	⌧⌧		'
┼⌧!⌧┼┼⌧!┼	/WNVKRN%GCTV4WTPCEG	'52	¶┼┼Z!⌧	ND◀VQP	⌧⌧		'
┼⌧!⌧┼┼⌧!┼	/WNVKRN%GCTV4WTPCEG	8GPVWTKWDDGT	!┼⌧Z!⌧	ND◀VQP	⌧⌧		'

6#$. ' ffi#⅞!⅛ffiffi%1 0 6+0 7 ' &

5%% 0WODGT	'OKUUKQP 5RQWTEG	%QPVTQNGXKEG	#XGTCIG 'OKUUKQP (CEVQT	7PKVU	'OKUUKQP (CEVQT	'OKUUKQP (CEVQT 4CVKPI
⅛⅞!⅝⅛⅞⅛	/WNVKRNG CTVJ WTPCEG	8GPVWTK ETWDDGT 9G\5ETWDDGT	!⅛⅞Z!⅛	ND VQP	⅞⅞	'
⅛⅞!⅝⅛⅞⅛	/WNVKRNG CTVJ WTPCEG	8GPVWTK ETWDDGT ORKPIGOGPV 9G\5ETWDDGT	!⅛⅞Z!⅛	ND VQP	⅞⅞	$
⅛⅞!⅝⅛⅞⅛	/WNVKRNG CTVJ WTPCEG	5KPINC %[ENQPG 8GPVWTK 5ETWDDGT ORKPIGOGPV 5ETWDDGT	!⅛⅞Z!⅛	ND VQP	⅞⅞	'
⅛⅞!⅝⅛⅞⅛	/WNVKRNG CTVJ WTPCEG	5KPINC %[ENQPG ORKPIGOGPV 5ETWDDGT	!⅛⅞Z!⅛	ND VQP	⅞⅞!⅛Z!⅛ ⅞⅞!⅛Z!⅛	7
⅛⅞!⅝⅛⅞⅛	/WNVKRNG CTVJ WTPCEG	5ETWDDGT	!⅛⅞Z!⅛	ND VQP	⅞⅞	7
⅛⅞!⅝⅛⅞!⅛	1VJGT PEKPGTCVKQP 5NWFIG (NWKFK\GFGF	8GPVWTK ETWDDGT ORKPIGOGPV 5ETWDDGT	!⅛⅞Z!⅛	ND VQP	⅞⅞	7
⅛⅞!⅝⅛⅞!⅛	1VJGT PEKPGTCVKQP 5NWFIG (NWKFK\GFGF	0QPG	!⅛⅞Z!⅛	ND VQP	⅞⅞	'
⅛⅞!⅝⅛⅞!⅛	1VJGT PEKPGTCVKQP 5NWFIG (NWKFK\GFGF	5KPINC %[ENQPG ORKPIGOGPV 6TC[5ETWDDGT	!⅛⅞Z!⅛	ND VQP	⅞⅞!⅛Z!⅛ ⅞⅞!⅛Z!⅛	7
⅛⅞!⅝⅛⅞!⅛	1VJGT PEKPGTCVKQP 5NWFIG (NWKFK\GFGF	.QY'PGTI[%[ENQPG ORKPIGOGPV 6TC[5ETWDDGT	!⅛⅞Z!⅛	ND VQP	⅞⅞	7
⅛⅞!⅝⅛⅞!⅛	1VJGT PEKPGTCVKQP 5NWFIG (NWKFK\GFGF	8GPVWTK ETWDDGT ORKPIGOGPV 9G\5ETWDDGT	!⅛⅞Z!⅛	ND VQP	⅞⅞	'
⅛⅞!⅝⅛⅞!⅛	1VJGT PEKPGTCVKQP 5NWFIG (NWKFK\GFGF	8GPVWTK ETWDDGT ORKPIGOGPV 9G\5ETWDDGT 52	!⅛⅞Z!⅛	ND VQP	⅞⅞	'
⅛⅞!⅝⅛⅞⅛	2CVJQNQIKECN 4QVKNTP	0QPG	!⅛⅞Z!⅛	ND VQP	⅞⅞	'
⅛⅞!⅝⅛⅞⅛	2CVJQNQIKECN %QPVTCEGNTNGF	0QPG	!⅛⅞Z!⅛	ND VQP	⅞⅞	$
⅛⅞!⅝⅛⅞⅛	2CVJQNQIKECN	9G\5ETWDDGT KIJ 'HHKEKGPE[	!⅛⅞Z!⅛	ND VQP	⅞⅞	'
⅛⅞!⅝⅛⅞⅛	2CVJQNQIKECN	9G\5ETWDDGT GFKWO HHKEKGPE[(	!⅛⅞Z!⅛	ND VQP	⅞⅞	'
⅛⅞!⅝⅛⅞⅛	2CVJQNQIKECN	(	!⅛⅞Z!⅛	ND VQP	⅞⅞	
⅛⅞!⅝⅛⅞⅛	2CVJQNQIKECN	9G\5ETWDDGT QY'HHKEKGPE[	!⅛⅞Z!⅛	ND VQP	⅞⅞	'
⅛⅞!⅝⅛⅞⅛	2CVJQNQIKECN	&T[5QTDGP VPLGEVKQP 52	!⅛⅞Z!⅛	ND VQP	⅞⅞	'
⅛⅞!⅝⅛⅞⅛	2CVJQNQIKECN	&T[5QTDGP VPLGEVKQP (	!⅛⅞Z!⅛	ND VQP	⅞⅞	'

⅞#

6#$. ' ffi#⌧!⌧ffiffi%1 0 6+0 7 ' &

5%% 0WODGT	'OKUUKQP 5RQWTEG	%QPVTQNXKEG	#XGTCIG 'OKUUKQP (CEVQT	7PKVU	'OKUUKQP (CEVQT	'OKUUKQP (CEVQT 4CPIG	4CVKPI
⌧!⌧⌧	2CVJQNQIKECN	&T[5QTDGPV PLGEVKQP %CTDQP +PLGEVKQP ((	!⌧Z!⌧	ND VQP	⌧⌧		'
⌧⌧⌧⌧	%QOOGTE KPEKPGTCVK QP 2CVJQNQIKECN 4QVKNT	0QPG	⌧Z!⌧	ND VQP	⌧⌧		'
⌧⌧⌧⌧	%QOOGTE KPEKPGTCVK QP 2CVJQNQIKECN %QPVTQNXKNGF	0QPG	⌧Z!⌧	ND VQP	⌧⌧		$
⌧⌧⌧⌧	%QOOGTE KPEKPGTCVK QP 2CVJQNQIKECN	0QPG	⌧Z!⌧	ND VQP	⌧Z!⌧ ⌧Z!⌧		7
⌧⌧⌧⌧	%QOOGTE KPEKPGTCVK QP 2CVJQNQIKECN	((	⌧Z!⌧	ND VQP	⌧⌧		'
⌧⌧⌧⌧	%QOOGTE KPEKPGTCVK QP 2CVJQNQIKECN	9GV5ETWDDGTKIJ 'HHKEKGPE[	⌧Z!⌧	ND VQP	⌧⌧		'
⌧⌧⌧⌧	%QOOGTE KPEKPGTCVK QP 2CVJQNQIKECN	9GV5ETWDDGTGFKWGHHKEKGPE[((	⌧Z!⌧	ND VQP	⌧⌧		'
⌧⌧⌧⌧	%QOOGTE KPEKPGTCVK QP 2CVJQNQIKECN	9GV5ETWDDGTQY'HHKEKGPE[	!⌧Z!⌧	ND VQP	⌧⌧		'
⌧⌧⌧⌧	%QOOGTE KPEKPGTCVK QP 2CVJQNQIKECN	&T[5QTDGPV PLGEVKQP 52	⌧!⌧Z!⌧	ND VQP	⌧⌧		'
⌧⌧⌧⌧	%QOOGTE KPEKPGTCVK QP 2CVJQNQIKECN	&T[5QTDGPV PLGEVKQP %CTDQP +PLGEVKQP ((	!⌧Z!⌧	ND VQP	⌧⌧		'
⌧⌧⌧⌧	%QOOGTE KPEKPGTCVK QP 2CVJQNQIKECN	&T[5QTDGPV PLGEVKQP ((	!⌧Z!⌧	ND VQP	⌧⌧		'
⌧⌧⌧⌧	5KOWNCVGF$WTPKPQ%JWPM #WVQOQDKNGGU	0QPG	!⌧Z!⌧	ND VQP	⌧⌧		%
⌧⌧⌧⌧	5KOWNCVGF$WTPKPQ 5JTGFFGF#WVQOQDKNGGU	0QPG	⌧Z!⌧	ND VQP	⌧⌧		%
⌧⌧⌧⌧	%TGOCVGT[CEM	0QPG	⌧Z!⌧	ND $QF[	⌧Z!⌧ ⌧Z!⌧	7	
⌧⌧⌧⌧	&KUVKNNCVKQP(KTGF6WTDKPG	0QPG	⌧Z!⌧	ND /$VW	⌧⌧		'
⌧⌧⌧⌧	)TCKP/KNNKPI4KEG&T[KPI	0QPG	!⌧Z!⌧	ND VQP	!⌧Z!⌧ ⌧Z!⌧		7

6#$.'ffi#☼!┼ffiffi%106+07'&

5%% 0WODGT	'OKUUKQP 5QWTEG	%QPVTQN 8NXKEG	#XGTCIG 'OKUUKQP (CEVQT	7PKVU	'OKUUKQP (CEVQT	4CPIG	'OKUUKQP (CEVQT 4CVKPI
┼☼¶☼↕☼┼	)TCKP/KNNKPI/4KEG %NGCPKPI◄/KNNJQWUG	0QPG	!┼¶Z!↕	ND◄VQP	←┼Z!↕	☼!┼¶Z!↕	7
┼☼┼☼!↕	'PVKTQ2TQEGUU	((	!┼←Z!↕	ND◄VQP	¶┼→↕Z!↕	☼┼┼→↕Z!↕	7
┼☼┼☼↕┼☼←	5OGNVKPI(WTPCEG	((	↑┼¶Z!↕	ND◄VQP	☼☼☼		7
┼☼┼☼↕┼☼←	$NCUV(WTPCEG#HVGTDWTPGT PGVNGV♂	#HVGTDWTPGT	!┼¶Z!↕	ND◄VQP	☼!┼!Z!↕	☼!┼→↕Z!↕	7
┼☼┼☼↕┼☼←	#TGCOKUUKQP2PVGTKCN5VQTCIG CPF*CPFNKPI	0QPG	!┼¶Z!↕	ND◄VQP	☼☼☼		7
┼☼┼☼↕┼	(WIKVKXGU(WTPCEG%JCTIKPI CPF 6CRRKPI♂	((	┼┼↑↕Z!↕	ND◄VQP	☼☼☼		7
┼☼┼☼↕┼	$NCUV CPF4GXGDGTCVQT(WTPCEGU	((◄9GV 5ETWDDGT7GFKWOHHKEKGPE[	¶┼→↕Z!↕	ND◄VQP	☼☼☼		7
┼☼┼☼↕┼☼┴	$NCUV(WTPCEG	#HVGTDWTPGT◄%[ENQPGU◄((	¶┼→↕Z!↕	ND◄VQP	☼☼☼		7
┼☼┼☼↕┼☼┼	$NCUV(WTPCEG CPF-GVVNG4GHKPKPI	#HVGTDWTPGT◄((◄8GPVWTK 5ETWDDGT◄&GOKUVGT	☼┼┼↕Z!↕	ND◄VQP	☼☼☼		7
┼☼┼☼↕┼☼¶	2TKOCT%QRRGT6OGNVKPI(6 /*44(◄($4'(	0QPG	☼☼☼	ND◄VQP	┼┼┼	☼↑┼¶→	7
┼☼┼☼↕┼☼┼	%QPXGTVGT(WIKVKXG'OKUUKQPU	0QPG	☼☼☼	ND◄VQP	┼┼↕Z!↕	☼!┼┼Z!↕	7
┼☼┼☼↕┼☼┼	4GXGTDGTCVQT(WTPCEG(WIKVKXG 'OKUUKQPU	0QPG	☼☼☼	ND◄VQP	┼┼¶Z!↕	☼!┼¶Z!↕	7
┼☼┼☼↕┼☼←	(NWKFK\GF$GF4QCUVGT	0QPG	☼☼☼	ND◄VQP	!┼┼Z!↕	☼┼┼Z!↕	7
┼☼┼☼↕┼☼¶	/WNVKRNG*GCTV4QCUVGT	0QPG	☼☼☼	ND◄VQP	¶┼┼Z!↕	☼┼┼↕Z!↕	7
┼☼┼☼↕┼☼┴	4GXGTDGTCVQT5OGNVG#HVGT 4QCUVGT♂	0QPG	☼☼☼	ND◄VQP	!┼→↕	☼←┼┼	7
┼☼┼☼↕┼☼┼	%QPXGTVGT#TN%QPHKIWTCVKQPU♂	0QPG	☼☼☼	ND◄VQP	¶┼↕Z!↕	☼!┼┼Z!↕	7
┼☼┼☼↕┼☼┴	4GXGTDGTCVQT5OGNVG#HVGT 4QCUVGT♂	'52	☼☼☼	ND◄VQP	┼┼↕Z!↕	☼¶┼↑Z!↕	7
┼☼┼☼↕┼☼┼	%QPXGTVGT#TN%QPHKIWTCVKQPU♂	'52	☼☼☼	ND◄VQP	¶┼↕Z!↕	☼┼┼↕Z!↕	7

6#$. ' ffi#⅜!⅛ffiffi%1 0 6+0 7 ' &

5%% 0WODGT	'OKUUKQP 5RQWTEG	%QPVTQNGXKEG	#XGTCIG 'OKUUKQP (CEVQT	7PKVU	'OKUUKQP (CEVQT	'OKUUKQP (CEVQT 4CVKPI
⅛⅜⅛⅜⅛	%QPXGTVGTTN %QPHKIWTCVKQPU♂	$CIJQWUG	⅜⅜	ND◀VQP	⅜⅛⅛Z!⅛ ⅜⅛⅛Z!⅛	7
⅛⅜⅛⅜⅛	(NWKFK\GFF 4QCUVGT	8GPVWTKETWDDGT	⅜⅜	ND◀VQP	⅜⅛⅛Z!⅛ ⅜⅛⅛Z!⅛	7
⅛⅜⅛⅜⅛	4QCUVKPI(WIKVKXG 'OKUUKQPU	5RTC[%JCODGT◀%GNNF	⅜⅜	ND◀VQP	⅜⅛⅛Z!⅛ ⅜⅛⅛Z!⅛	7
⅛⅜⅛⅜⅛	4GXGTDGTCVQT[%QTPCEG(WIKVKXG 'OKUUKQPU	$CIJQWUG	⅜⅜	ND◀VQP	⅜⅛⅛Z!⅛ ⅜⅛⅛Z!⅛	7
⅛⅜⅛⅜⅛	2TKOCT[%QRRGT6GTGNVKPI(6 /*44(◀($4'(	5RTC[%JCODGT◀$CIJQWUG	⅜⅜	ND◀VQP	⅛⅛Z!⅛ ⅜⅛⅛Z!⅛	7
⅛⅜⅛⅜⅛	$WTPKPI◀&T[KPI	8GPVWTKETWDDGT	⅛⅛Z!⅛	ND◀VQP	⅛⅛Z!⅛ ⅜⅛⅛Z!⅛	7
⅛⅜⅛⅜⅛	$WTPKPI◀&T[KPI	$CIJQWUG	⅛⅛Z!⅛	ND◀VQP	⅛⅛Z!⅛ ⅜⅛⅛Z!⅛	7
⅛⅜⅛⅜⅛	$WTPKPI◀&T[KPI	/WNVKRNGENQPGU	⅛⅛Z!⅛	ND◀VQP	⅛⅛Z!⅛ ⅜⅛⅛Z!⅛	7
⅛⅜⅛⅜⅛	'NGEVTKE(WTPCEG	0QPG	⅛⅛Z!⅛	ND◀/9J	⅜⅜	7
⅛⅜⅛⅜⅛	'NGEVTKE(WTPCEG	0QPG	⅛⅛Z!⅛	ND◀/9J	⅜⅜	7
⅛⅜⅛⅜⅛	'NGEVTKE(WTPCEG	8GPVWTKETWDDGT	⅛⅛Z!⅛	ND◀/9J	⅜⅜	7
⅛⅜⅛⅜⅛	2TQEGUUU .CPFHKNNU	0QPG	⅛⅛Z!⅛	ND◀/$VW	⅛⅛Z!⅛ ⅜⅛⅛Z!⅛	7
⅛⅜⅛⅜⅛	(CDTKECVGGVCN2TQFWEV(WTPCEG	$CIJQWUG	⅛⅛Z!⅛	ND◀VQP	⅛⅛Z!⅛ ⅜⅛⅛Z!⅛	7
⅛⅜⅛⅜⅛	+TQP(QWPFT[%WRQNC	0QPG	⅛⅛Z!⅛	ND◀VQP	⅜⅜	7
⅛⅜⅛⅜⅛	+TQP(QWPFT[%WRQNC	$CIJQWUG	⅛⅛Z!⅛	ND◀VQP	⅛⅛Z!⅛ ⅜⅛⅛Z!⅛	7
⅛⅜⅛⅜⅛	4QVCT&T[GT %QPXGPVKQPCNCPV	((	⅛⅛Z!⅛	ND◀VQP	⅜⅜	'
⅛⅜⅛⅜⅛	4QVCT&T[GT %QPXGPVKQPCNCPV	/WNVKRNGENQPGU6KVJQWNV[#UJ 4GKPLGEVKQP◀((	⅛⅛Z!⅛	ND◀VQP	⅛⅛Z!⅛ ⅜⅛⅛Z!⅛	7
⅛⅜⅛⅜⅛	&TW&T[GT *QV#URJCNCNCPVU	0QPG	⅛⅛Z!⅛	ND◀VQP	⅛⅛Z!⅛ ⅜⅛⅛Z!⅛	7
⅛⅜⅛⅜⅛	&TW&T[GT *QV#URJCNCNCPVU	((	⅛⅛Z!⅛	ND◀VQP	⅜⅜	&
⅛⅜⅛⅜⅛	4QVCT&T[GT 5CPF5NCUVKPTKV	9GV5ETWDDGT	⅛⅛Z!⅛	ND◀VQP	⅜⅜	'
⅛⅜⅛⅜⅛	&T[2TQEGUUKNP	'52	⅛⅛Z!⅛	ND◀VQP	⅜⅜	&

#⅜!⅛

6#$. ' ffi#⅜⅛ffiffi%1 0 6+0 7 ' &

5%% 0WODGT	'OKUUKQP 5RQWTEG	%QPVTQNXKEG	#XGTCIG 'OKUUKQP (CEVQT	7PKVU	'OKUUKQP (CEVQT	'OKUUKQP (CEVQT 4CVKPI
⅜⅛⅜⅛	&T[2TQEGUUKNP	3WGPEEQYGT◀((	⅛⅜⅛Z⅛⅜	ND◀VQP	⅜⅜	&
⅜⅛⅜⅛	&T[2TQEGUUKNP	3WGPEEQYGT◀((	⅛⅜⅛Z⅛⅜	ND◀VQP	⅜⅜	&
⅜⅛⅜⅛	&T[2TQEGUUKNP	((	⅛⅜⅛Z⅛⅜	ND◀VQP	⅜⅜	&
⅜⅛⅜⅛	&T[2TQEGUUKNP	/WNVKRNG4GENQPGU◀((	⅛⅜⅛Z⅛⅜	ND◀VQP	⅜⅜	&
⅜⅛⅜⅛	&T[2TQEGUUKNP	((	⅛⅜⅛Z⅛⅜	ND◀VQP	⅜⅜	&
⅜⅛⅜⅛	&T[2TQEGUUKNP	'52	⅛⅜⅛Z⅛⅜	ND◀VQP	⅜⅜	'
⅜⅛⅜⅛	&T[2TQEGU2JTGJGCVGKNP	((	⅛⅜⅛Z⅛⅜	ND◀VQP	⅜⅜	&
⅜⅛⅜⅛	&T[2TQEGU2JTGJGCVGKNP	'52	⅛⅜⅛Z⅛⅜	ND◀VQP	⅜⅜	'
⅜⅛⅜⅛	&T[2TQEGU2JTGJGCVGT◀2TGECNEKPGT -KNP	((	⅛⅜⅛Z⅛⅜	ND◀VQP	⅜⅜	&
⅜⅛⅜⅛	&T[2TQEGU2JTGJGCVGT◀2TGECNEKPGT -KNP	'52	⅛⅜⅛Z⅛⅜	ND◀VQP	⅜⅜	'
⅜⅛⅜⅛	9GV2TQEGUUKNPU	((	⅛⅜⅛Z⅛⅜	ND◀VQP	⅜⅜	&
⅜⅛⅜⅛	9GV2TQEGUUKNPU	'52	⅛⅜⅛Z⅛⅜	ND◀VQP	⅜⅜	'
⅜⅛⅜⅛	&KTGEV%QPVCEV&CRQTCVQT4GEQXGT4GVTPCEG	'52	⅛	ND◀/VQP $.5	⅜⅜	&
⅜⅛⅜⅛	0QPFKTGEV&QPVCEV&CRQTCVQT -TCHV4GEQXGT4GVTPCEG	'52⅞ '52 CPF9GV5ETWDDGT	⅛⅜	ND◀/VQP $.5	⅜⅜	&
⅜⅛⅜⅛	5OGN&KUUQNXKPM	&GOKUVGT	⅛⅜Z⅛⅜	ND◀/VQP $.5	⅜⅜	&
⅜⅛⅜⅛	.KOGKNP	0QPG	⅛⅜Z⅛⅜	ND◀#&62	⅜⅜	7
⅜⅛⅜⅛	.KOGKNP	5ETWDDGT	⅛⅜	ND◀/VQP $.5	⅜⅜	&
⅜⅛⅜⅛	5WNHKV4GEQXGT4GVTPCEG	0QPG	⅛⅜	ND◀/VQP 4.5	⅜⅜	&

6#$.'ffi#¤!┤ffiffi%106+07'&

5%% 0WODGT	'OKUUKQP 5RWTEG	%QPVTQN 8NXKEG	#XGTCIG 'OKUUKQP (CEVQT	7PKVU	'OKUUKQP (CEVQT	4CPIG	'OKUUKQP (CEVQT 4CVKPI
┤¤!¤!┬	)NCUUCPWHCEVWTG 4GIGPGTCVKXG V[RG(WTPCEG	0QPG	┤┤¤Z!¤	ND◄VQP	¤¤		7
┤¤!¤¤¤┤¤!┴	1KNCPF)CU2TQFWEVKQPQEGUU *GCVGTU%TWFGKN5VGCO)GPGTCVQT	0QPG	←┤←Z!¤	ND◄/$VW	┤!┤Z!¤	¤ !┤¶Z!¤	7
┤¤!¤¤¤!¤¤!!	2GVTQNGWPFWUVT2KRGNKPGUN (KTGF2TQEGUTGCVGTU	0QPG	┤¤!¤Z!¤	ND◄/$VW	┤¤!¤Z!¤	¤ ┤¤!¤Z!¤	7
┤¤!¤¤¤┤¤¶	1KNCPF)CU2TQFWEVKQPUKFWCN 1KN(KTGF2TQEGUTGCVGT	0QPG	¶┤¤Z!¤	ND◄/$VW	←┤¤Z!¤	¤ ┤┤!¤Z!¤	7

#¤!┬

TECHNICAL REPORT DATA

(PLEASE READ INSTRUCTIONS ON THE REVERSE BEFORE COMPLETING)

1. REPORT NO. EPA-454/R-98-013	2.	3. RECIPIENT'S ACCESSION NO.
4. TITLE AND SUBTITLE LOCATING AND ESTIMATING AIR EMISSION FROM SOURCES OF ARSENIC AND ARSENIC COMPOUNDS		5. REPORT DATE 6/1/98 6. PERFORMING ORGANIZATION CODE
7. AUTHOR(S)		8. PERFORMING ORGANIZATION REPORT NO.
9. PERFORMING ORGANIZATION NAME AND ADDRESS EASTERN RESEARCH GROUP, INC P O BOX 2010 MORRISVILLE, NC 27560		10. PROGRAM ELEMENT NO. 11. CONTRACT/GRANT NO. 68-D7-0068
12. SPONSORING AGENCY NAME AND ADDRESS U. S. ENVIRONMENTAL PROTECTION AGENCY OFFICE OF AIR QUALITY PLANNING AND STANDARDS (MD-14) RESEARCH TRIANGLE PARK, NC 27711		13. TYPE OF REPORT AND PERIOD COVERED FINAL 14. SPONSORING AGENCY CODE

15. SUPPLEMENTARY NOTES

EPA WORK ASSINGMENT MANAGER: DENNIS BEAUREGARD (919) 541-5512

16. ABSTRACT

TO ASSIST GROUPS INTERESTED IN INVENTORYING AIR EMISSIONS OF VARIOUS POTENTIALLY TOXIC SUBSTANCES, THE U.S. ENVIRONMENTAL PROTECTION AGENCY IS PREPARING A SERIES OF DOCUMENTS, SUCH AS THIS, TO COMPILE AVAILABLE INFORMATION ON SOURCES AND EMISSIONS OF THESE SUBSTANCES. THIS DOCUMENT DEALS SPECIFICALLY WITH ARSENIC AND ARSENIC COMPOUNDS. ITS INTENDED AUDIENCE INCLUDES, FEDERAL, STATE, AND LOCAL AIR POLLUTION PERSONNEL AND OTHERS INTERESTED IN LOCATING POTENTIAL EMITTERS OF ARSENIC AND IN MAKING GROSS ESTIMATES OF AIR EMISSIONS THEREFROM.

THIS DOCUMENT PRESENTS INFORMATION ON (1) THE TYPES OF SOURCES THAT MAY EMIT ARSENIC; (2) PROCESS VARIATIONS AND RELEASE POINTS FOR THESE SOURCES; AND (3) AVAILABLE EMISSIONS INFORMATION INDICATING THE POTENTIAL FOR ARSENIC RELEASES INTO THE AIR FROM EACH OPERATION.

17. KEY WORDS AND DOCUMENT ANALYSIS

a. DESCRIPTORS	b. IDENTIFIERS/OPEN ENDED TERMS	c. COSATI FIELD/GROUP
ARSENIC AIR EMISSION SOURCES TOXIC SUBSTANCES EMISSION ESTIMATION		
18. DISTRIBUTION STATEMENT UNLIMITED	UNCLASSIFIED	21. NO. OF PAGES 278
	UNCLASSIFIED	22. PRICE

To: McClintock, Katie[McClintock.Katie@epa.gov]
From: McClintock, Katie
Sent: Thur 3/3/2016 6:54:05 AM
Atmospheric fall-out of metals around Murano flass-making district (venice, italy) - 2008 paper.pdf

Katie McClintock

Air Enforcement Officer

EPA Region 10

1200 Sixth Avenue, Suite 900, OCE-101

Seattle, WA 98101

Phone: 206-553-2143

Fax: 206-553-4743

Mcclintock.katie@epa.gov

To: Wroble, Julie[Wroble.Julie@epa.gov]; Narvaez, Madonna[Narvaez.Madonna@epa.gov]
From: McClintock, Katie
Sent: Thur 3/3/2016 6:11:10 AM
Subject: FW: Your ProQuest Research
ATT00001.gif
809858571_1.jpeg
809858571_2.jpeg
809858571_3.jpeg
809858571_4.jpeg
809858571_5.pdf
809858571_6.jpeg
809858571_7.jpeg
810323288_1.jpeg
810323288_2.jpeg
810323288_3.jpeg
810323288_4.jpeg
810323288_5.jpeg
810323288_6.jpeg
810323288_7.jpeg
810323288_8.jpeg
810323288_9.pdf
810323288_10.jpeg
290149665_1.jpeg
290149665_2.jpeg

The first one looks especially fascinating!

From: noreply@proquest.com [mailto:noreply@proquest.com]
Sent: Wednesday, February 24, 2016 5:41 PM
To: McClintock, Katie <McClintock.Katie@epa.gov>
Subject: Your ProQuest Research

All documents are reproduced with the permission of the copyright owner. Further reproduction or distribution is prohibited without permission.
Please do not reply directly to this email.

Liz Doyle sent you the following:

Email 0 of 1

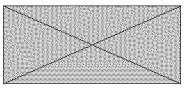

Report Information from ProQuest

February 24 2016 20:41

Table of contents

Search Strategy

-99. Atmospheric fall-out of metals around the Murano glass-making district (Venice, Italy)

-98. Application of life cycle assessment to the production of man-made crystal glass

-97. PM sub(1) sub(0), PM sub(2) sub(.) sub(5) and PM sub(1) sub(.) sub(0)-Emissions from industrial plants-Results from measurement programmes in Germany

-96. Atmospheric Bulk Deposition to the Lagoon of Venice Part II. Source Apportionment Analysis near the Industrial Zone of Porto Marghera, Italy

Search Strategy

Set	Searched for	Databases	Resul
S8	all(glass manufacture* or "glass production") AND all(air) AND all((emissions OR releases)) AND all((cadmium OR heavy metal* OR arsenic))	ProQuest Environmental Science Collection	15°
S7	all("glass manufacture*" or "glass production") AND all(air) AND all((emissions OR releases)) AND all((cadmium OR heavy metal* OR arsenic))	ProQuest Environmental Science Collection	4°
S6	all(glass manufacture* or glass production) AND all(air) AND all((emissions OR releases)) AND all((cadmium OR heavy metal* OR arsenic))	ProQuest Environmental Science Collection	48°
S5	all(glass manufacture*) AND all(air) AND all((emissions OR releases)) AND all((cadmium OR heavy metal* OR arsenic))	ProQuest Environmental Science Collection	13°
S4	all(glass manufacture*) AND all(air) AND all((emissions OR releases)) AND all((cadmium OR arsenic))	ProQuest Environmental Science Collection	4°
S3	all(glass manufacture*) AND all(air) AND all((emissions OR releases))	ProQuest Environmental Science Collection	89°
S2	(glass manufacture*) AND air AND (emissions OR releases)	ProQuest Environmental Science Collection	8417°
S1	(glass manufactur*) AND air AND (emissions OR releases)	ProQuest Environmental Science Collection	10172

Document -99 of 4

Atmospheric fall-out of metals around the Murano glass-making district (Venice, Italy)

Author: Rossini, Paolo1; Matteucci, Gabriele; Guerzoni, Stefano1 Istituto di Ricerca Gruppo CSA, Via Al Torrente 22, I-47900, Rimini, Italy, prossini@csaricerche.com

ProQuest document link

Abstract: Background, aim and scope: Murano's glass-makers have held a monopoly on quality glass-

making for centuries known all over the world. Artistic glass manufacture entails exposure to complex mixtures of pollutants, including metals. A few studies have reported high levels of trace elements in marine waters, sediments and mussels around Murano and shown that emissions from Murano glass-making workshops significantly influence air quality in the Venice area. Nevertheless, to date, there is very little information on atmospheric concentrations and virtually none on atmospheric deposition fluxes of trace elements around the island. This study presents data on the distribution of trace elements in the air and atmospheric depositions around Murano, based on a 2-year sampling period. Materials and methods: Airborne PM10 particulate matter was collected daily in the period December 2001-June 2003 (254 air samples), and atmospheric depositions were collected every 19c6days, in the period August 2001-July 2003 (38 samples) on the roof of the Experimental Glass Laboratory on the island of Murano. All samples were analysed by ICP-MS for As, Cd, Cr, Cu, Fe, Mn, Ni, Pb, Sb, Se and Zn contents. Results: Atmospheric concentrations of As, Cd, Cr, Ni, Pb, Se and Zn were 1-2 orders of magnitude greater on the island of Murano than in the nearest urban areas (Venice and Mestre), with values higher than those reported for European industrial sites. The atmospheric deposition fluxes of all elements were also higher in Murano than those detected by other studies in Venice and Mestre and in the Porto Marghera industrial zone, with As, Cd, Sb and Se 1-2 orders of magnitude higher. Discussion: In order to study the spatial variability of the atmospheric fall-out, data from other sampling stations belonging to Venice atmospheric deposition monitoring networks were used. A decreasing gradient from Murano to the closer leeward stations was observed for As, Cd and Se. Pb and Zn deposition fluxes in Venice were also comparable to those observed in the Porto Marghera industrial zone, thus, indicating a similar or even higher level of contamination. Principal component analysis confirmed significant contamination from the glassworks. Conclusions: As shown by our study, atmospheric loadings of metals around Murano are significant. These observations confirm that emissions from Murano also significantly influence atmospheric deposition in the Venice area. Specifically, the mean daily Cd flux in the most affected area, which includes the whole of the historic city centre of Venice, is ~18kgm super(-2) day super(-1), i.e. more than 65 times higher than the Dutch limit and more than three times higher than that of Germany. Recommendations and perspectives: On the basis of our data, there is a clear-cut need for remedial action in the Lagoon of Venice. Monitoring is indispensable, so that the efficacy of remedial measures can be evaluated and appropriate information about risks for human health and well-being can be made available. The atmospheric compartment must also be considered by Italian and European law which, until now, has not yet established any standard for atmospheric deposition.

Full text: Not available.

Article term :

Geographic term: Italy, Veneto, Venezia, Porto Marghera, Germany, Italy, Venezia, Mestre, MED, Italy, Veneto, Venezia, Veneta Lagoon, Italy

Object term :

Subject term: Deposition, Calculating, Metals, Lagoons, Period, Vertical, Shading, Industrial, Stations, Fall, Annual, Surface Area, Sampling, Copper, Iron, Glass, Workshops, Plots, Space, Factors, Databases, Monthly, Variables, Horizontal, Airborne, Particulate matter, Daily, Anemometry, Precipitation, Minima, Maxima, Variability, Ranges, Historic, Monitoring, Networks, Concentration, Fluxes, Limits, Comparison, Literature, Magnitude, Standards, Rain, Air quality standards, Criteria, Html, ENVIRONMENTAL PROTECTION AGENCY, Distance, Elements, Effects, Corporations, Emissions, Respondents

Geographic term: Italy, Veneto, Venezia, Porto Marghera, Italy, Veneto, Venezia, Porto Marghera, Italy, Veneto, Venezia, Porto Marghera, Italy, Venezia, Mestre, European Union, Netherlands, China, Hainan Province, Hainan Island, Dongzhai Harbour, National, Italy, Veneto, Portugal, Coimbra, Portugal

Statistical term: Mean, time series, Median

Classification: EN: 20 Air Pollution: Monitoring, Control & Remediation; ENA: 01 Air Pollution; P: 0000 AIR POLLUTION; 20: Air Pollution: Monitoring, Control & Remediation (EN)

Correspondence author: Rossini, Paolo

Author e-mail address: prossini@csaricerche.com

Publication title: Environmental Science and Pollution Research International

Volume: 17

Issue: 1

Pages: 40-48

Number of pages: 9

Publication year: 2010

Year: 2010

Publisher: Springer Science+Business Media

Country of publication: Netherlands

Publication subject: Environmental Studies--Pollution

ISSN: 0944-1344

Source type: Scholarly Journals

Peer reviewed: Yes

Summary language: English

Language of publication: English

Document type: Journal Article

Subfile: Environmental Engineering Abstracts; Pollution Abstracts; Environment Abstracts

DOI: http://dx.doi.org/10.1007/s11356-009-0122-8

Update: 2013-05-01

Accession number: 12596965

ProQuest document ID: 809858571

Document URL: http://search.proquest.com/docview/809858571?accountid=171501

Last updated: 2013-09-25

Database: ProQuest Environmental Science Collection

Figures and tables:

Figure 1.

Table 1.

Table 2.

Application of life cycle assessment to the production of man-made crystal glass

Author: Pulselli, Riccardo M; Ridolfi, Roberto; Rugani, Benedetto1; Tiezzi, Enzo1 Department of Chemistry, University of Siena, Via Aldo Moro, 2, 53100, Siena, Italy, rugani2@unisi.it

ProQuest document link

Abstract: Background, aim and scope: This paper presents a life cycle assessment (LCA) of the manufacturing process of crystal glass products in order to evaluate the potential environmental impacts due to a crystalware company located in Colle di Val d'Elsa, Siena (Italy). Since there is not any published research specifically focussed on crystal production to our knowledge, outcomes from this study would represent a first documented evidence gathered from an LCA of crystal glass products. Once a detailed description of the production process was provided, different categories of impacts were assessed and analysed. Outcomes allowed us to identify 'weak points' in the production process and propose possible solutions for decreasing the risk of negative effects on the environment. Materials and methods: According to the LCA methodology, the whole life cycle of crystal glass was structured into four primary phases-raw materials acquisition, crystal glass manufacturing, product utilisation and final disposal-each of which includes a set of sub-processes. Through an accurate life cycle inventory, primary data, relative to the year 2006, were elaborated through the EDIP database. The calculation of impacts was aided by GaBi4 software with reference to a functional unit corresponding to 1kg of crystal glass products. Relative to the CML2001 problem-oriented approach, a set of impact categories was used for the classification and characterisation of the life cycle impact assessment. Potential category indicators were finally accounted for and normalised in accordance with the CML Western Europe method. Results: The following ten impact categories were assessed: (1) depletion of abiotic resources, (2) acidification, (3) eutrophication, (4-6) ecotoxicity (marine and freshwater aquatic as well as terrestrial, respectively), (7) climate change (greenhouse effect), (8) human toxicity, (9) stratospheric ozone depletion and (10) photo-oxidant formation. Results showed that among the main phases, crystal glass manufacturing is the one with the highest environmental impact and emissions to air, mainly due to an intensive use of energy and materials. In particular, some sub-processes within the manufacturing stage, such as melting in furnaces, acid polishing, cutting and forming, were found to hold a high responsibility for most of the environmental

effects. The main effects depend on CO sub(2), NO sub(x) and SO sub(2) emissions, heavy metals emissions and use of non-renewable resources. In particular, the latter is due to the processes of extraction, refining, transport and use of fuels such as natural gas. Discussion: Results were analysed relative to each of the main processes involved in the crystal glass life cycle and critical points were investigated in order to inform the administrators of the crystalware company and address future choices towards a more sustainable production. Some technical solutions were proposed in order to improve environmental performances. Impacts due to the use of lead in the mixture were widely treated in literature and briefly discussed here. Conclusions: An accurate energy and material flow inventory allowed us to assess the potential environmental impacts of the crystal glass production in Colle Val d'Elsa, including the effects of processes occurring within the industrial plant and those due to the import of products and services from outside. Through the case study, we aimed to provide an exhaustive description of the main steps in the process and clear results relative to different impact categories. Outcomes showed that some procedures could be implemented in order to decrease these impacts. The use of lead is an irreplaceable characteristic of crystal products, but also a critical point to deal with. Nevertheless, the high quality of man-made crystal products makes the use of lead acceptable. The LCA of crystal glass products presented in this paper provided an accurate description of processes and procedures that can mirror a traditional production in a broader sense. This paper can therefore represent a valuable reference for future studies on crystal glass production processes. Recommendations and perspectives: The LCA method was performed for identifying critical aspects in the production process from an energetic and environmental viewpoint and was useful for constructing a model of the crystal glass production in Colle di Val d'Elsa. This can be a starting point for processing an environmental product declaration.

Full text: Not available.

Article term :

Geographic term: Italy, Siena, Italy

Object term :

Subject term: Life cycle, Diagrams, Crystals, Glass, Production, Definitions, Systems, Boundaries, Primary, PHASES, Raw Materials, Acquisition, Upstream, Products, Fabrication, Manufacturing, Disposal, Life, Phenomena, Volume, Waste, Indium, Power Supplies, Arsenic, Secondary, Processes, Transport, Total, Points, Relative, Size, Potential, Collisions, Effects, Environmental Impacts, Indicators, Depletion, Adenosine diphosphate, Acidification, Eutrophication, Marine, Aquatic, Freshwater, Environmental Impact Assessments, Endothelin, Values, Index, Data, normalised, Impact, Scores, Phases

Taxonomic term: Ficus

Geographic term: Europe

Statistical term: cycle

Classification: P 0000: AIR POLLUTION; ENA 08: International; M3 1010: Issues in Sustainable Development

Correspondence author: Rugani, Benedetto

Author e-mail address: rugani2@unisi.it

Publication title: International Journal of Life Cycle Assessment

Volume: 14

Issue: 5

Pages: 490-501

Number of pages: 12

Publication year: 2009

Year: 2009

Publisher: Springer Science+Business Media

Country of publication: Netherlands

Publication subject: Environmental Studies

ISSN: 0948-3349

Source type: Scholarly Journals

Peer reviewed: Yes

Summary language: English

Language of publication: English

Document type: Journal Article

Subfile: Environmental Engineering Abstracts; Sustainability Science Abstracts; Pollution Abstracts; Environment Abstracts

DOI: http://dx.doi.org/10.1007/s11367-009-0085-5

Update: 2013-05-01

Accession number: 11765603

ProQuest document ID: 810323288

Document URL: http://search.proquest.com/docview/810323288?accountid=171501

Last updated: 2013-09-26

Database: ProQuest Environmental Science Collection

Figures and tables:

Figure 2.

Figure 3.

Table 1.

Table 2.

Table 3.

Table 4.

Table 5.

Document -97 of 4

PM sub(1) sub(0), PM sub(2) sub(.) sub(5) and PM sub(1) sub(.) sub(0)-Emissions from industrial plants-Results from measurement programmes in Germany

Author: Ehrlich, C1; Noll, G; Kalkoff, W D; Baumbach, G; Dreiseidler, A1 Reideburger Str. 47, D-06116 Halle, Germany, ehrlich@lau.mlu.sachsen-anhalt.de

ProQuest document link

Abstract: Emission measurement programmes were carried out at industrial plants in several regions of Germany to determine the fine dust in the waste gases; the PM sub(1) sub(0), PM sub(2) sub(.) sub(5) and PM sub(1) sub(.) sub(0) fractions were sampled using a cascade impactor technique. The installations tested included plants used for: combustion (brown coal, heavy fuel oil, wood), cement production, glass production, asphalt mixing, and processing plants for natural stones and sand, ceramics, metallurgy, chemical production, spray painting, wood processing /chip drying, poultry farming and waste treatment. In addition waste gas samples were taken from small-scale combustion units, like domestic stoves, firing lignite briquettes or wood. In total 303 individual measurement results were obtained during 106 different measurement campaigns. In the study it was found that in more than 70% of the individual emission measurement results from industrial plants and domestic stoves the PM sub(1) sub(0) portion amounted to more than 90% and the PM sub(2) sub(.) sub(5) portion between 50% and 90% of the total PM (particulate matter) emission. For thermal industrial processes the PM sub(1) sub(.) sub(0) portion constituted between 20% and 60% of the total PM emission. Typical particle size

distributions for different processes were presented as cumulative frequency distributions and as frequency distributions. The particle size distributions determined for the different plant types show interesting similarities and differences depending on whether the processes are thermal, mechanical, chemical or mixed. Consequently, for the groups of plant investigated, a major finding of this study has been that the particle size distribution is a characteristic of the industrial process. Attempts to correlate particle size distributions of different plants to different gas cleaning technologies did not lead to usable results.

Full text: Not available.

Article term :

Subject term: Particle size distribution, Atmospheric pollution, Particulate matter emissions

Geographic term: Germany

Classification: M2 551.510.42: Air Pollution (551.510.42); P 0000: AIR POLLUTION

Correspondence author: Ehrlich, C

Author e-mail address: ehrlich@lau.mlu.sachsen-anhalt.de

Publication title: Atmospheric Environment

Volume: 41

Issue: 29

Pages: 6236-6254

Number of pages: 19

Publication year: 2007

Year: 2007

Publisher: Elsevier BV

Country of publication: Netherlands

Publication subject: Environmental Studies

ISSN: 1352-2310

Source type: Scholarly Journals

Peer reviewed: Yes

Summary language: English

Language of publication: English

Document type: Journal Article

Subfile: Environmental Engineering Abstracts; CSA / ASCE Civil Engineering Abstracts; Aerospace & High Technology Database; Meteorological & Geoastrophysical Abstracts; Pollution Abstracts

DOI: http://dx.doi.org/10.1016/j.atmosenv.2007.03.059

Update: 2013-05-01

Accession number: 7553175

ProQuest document ID: 290149665

Document URL: http://search.proquest.com/docview/290149665?accountid=171501

Last updated: 2013-09-26

Database: ProQuest Environmental Science Collection

Figures and tables:

Table 3.

Document -96 of 4

Atmospheric Bulk Deposition to the Lagoon of Venice Part II. Source Apportionment Analysis near the Industrial Zone of Porto Marghera, Italy

Author: Guerzoni, S; Rampazzo, G; Molinaroli, E; Rossini, P

ProQuest document link

Abstract: Atmospheric bulk deposition data collected over a nine-month period at four stations within the Lagoon of Venice, Italy, were analyzed statistically to explore probable sources. Results indicated that crustal, anthropogenic, and marine components contributed 28, 44, and 11%, respectively, to the bulk total suspended particulate load, with the anthropogenic sources identified as oil refineries, mixed metallurgy and glass production, the chloro-soda industry, and automobile emissions. The maximum allowable discharge limits were found to be exceeded for arsenic, cadmium, mercury, lead, dissolved zinc, PAHs, and PCDD/Fs.

Full text: Not available.

Subject: SOURCE MEASUREMENT; ATMOSPHERIC POLLUTANT DEPOSITION; LAGOONS; ITALY; DATA, AIR

Classification: ENA 07: General

Correspondence author: Guerzoni, S

Publication title: Environment International

Volume: 31

Issue: 7

Pages: 975

Number of pages: 1

Publication year: 2005

Year: 2005

Publisher: Elsevier Science, P.O. Box 800 Kidlington Oxford OX5 1DX

ISSN: 0160-4120

Source type: Scholarly Journals

Peer reviewed: Yes

Summary language: English

Language of publication: English

Document type: Journal Article

Document feature: |n 2 |t graphs

Subfile: Environment Abstracts

Update: 2009-08-01

Accession number: 10688945

ProQuest document ID: 14752775

Document URL: http://search.proquest.com/docview/14752775?accountid=171501

Last updated: 2011-12-15

Database: ProQuest Environmental Science Collection

Contact ProQuest

Copyright © 2016 ProQuest LLC. All rights reserved. - Terms and Conditions

To: Schaufelberger, Daniel[schaufelberger.daniel@epa.gov]; Prentice, Dakota[prentice.dakota@epa.gov]
From: McClintock, Katie
Sent: Thur 3/3/2016 5:34:23 AM
Subject: FW: Please Call Us About Stained Glass
Spectrum Glass Questions left after Inspection.jpeg
Questions left for Uroboros after Inspection.jpeg
Inspection Questions.jpeg
Questions left with Bullseye.jpeg

Hi Dan and Dakota –

I haven't had time to write up more specific advice for inspections (and R4 needed it today). But here are my questions for the bullseye inspection and the written requests I left with each company. We learned a lot at bullseye so I might adjust my questions a bit but I think this is a good list to get you most of what you need. Look forward to talking to you tomorrow.

Katie

From: McClintock, Katie
Sent: Wednesday, March 02, 2016 8:49 AM
To: Dubose, Dick <DuBose.Dick@epa.gov>
Cc: Taylor, Kevin <Taylor.Kevin@epa.gov>
Subject: RE: Please Call Us About Stained Glass

It the interest of getting you something soon rather than nothing too late, I am just scanning in my inspection questions from bullseye (asked similar things at all 3) and the written questions I left for each facility.

I apologize that this will take some processing on your part but fear that I won't have the time to synthesize everything.

Katie

Note – we have a lot of FOIAs. So preserve documents.

From: Dubose, Dick
Sent: Wednesday, March 02, 2016 7:43 AM
To: McClintock, Katie <McClintock.Katie@epa.gov>
Cc: Taylor, Kevin <Taylor.Kevin@epa.gov>
Subject: Please Call Us About Stained Glass

Katie:

Can you call me at 404-562-9168 or Kevin Taylor at 404-562-9134.

Thank you,

Dick DuBose

Uroboros Questions 2/11/16 - Copy to oregon

8 1. Refractory materials for tank & superstructure. Invoices & material information (MSDS) for each furnace, back a few years.

7 2. Temperature readings for each furnace back to 10/1/15 in spreadsheet format

3 3. Products run on each furnace with batch ticket, product, date. Since 10/1/15. ~~&~~ Include furnace #.

4 4. Batch recipes w/ MSDS for all raw materials. Any product made since 10/1/15.

2 ↳ all chromium ~~based~~ containing recipes immediately

5. ~~Glass reten~~ Metals retained in the glass for each product or category & source of information.

1 6. Size and design of each furnace by number with a plant diagram w/ furnace numbers. Size in ~~tons~~ holding capacity & tons/hr, batches per year, tons/yr.

6 7. Schematic of each type of furnace.

5 8. Date of original construction of each furnace.

Copy left on site 2/11

Lance will call Tuesday/Wednesday

Records Request from Bullseye Glass 2/10/16

Send example first

1. Refractory materials for tank & superstructure. Invoices & material information for each furnace in operation 3 yrs.
2. Temperature readings for each furnace back to 10/1/15. In spreadsheet form.
3. Products run w/ furnace, product, date ~~on each day in October~~. since 10/1/15 Batch schedules
4. Batch recipes w/ MSDS for various ~~product~~ raw materials since 10/1/15
5. Size of each furnace by furnace number
6. Schematic of the furnace

→ Some info by Friday. Check in Friday

Copyleft will
Bullseye 2/10/16

Bullseye Glass

✓ Describe furnaces & ages, NG firing rates

✓ 1. What is your refractory made out of for each furnace? Do they have chromium

✓ 2. What temperature are you melting the glass?

3. Describe process

4. Describe emissions

✓ 5. How many furnaces are oxyfuel, ~~how m~~ – when did they convert?

✓ 6. How much glass do you make per month? Per Year

7. How much chromium do you add? Which products? Hex or Tri?
What happened on 10/6 & 10/24?

8. Go through other high days, were they related to a certain product?

9. [redacted] Some emissions were detected every day at reasonably high quantities & some are variable.

✓ 10. What parts of the furnaces have chromium refractory & %! » at or above melt line

— 11. Raw material handling. Silica emissions. Baghouse

— 12. Look at Frit process, emissions, baghouse

✓ 13. Where do furnaces exhaust.

✓ 14. Where do you measure temperature in the furnaces & what is recorded?

✓ 15. How often are the furnaces rebricked?

16. What is the current schedule & what is the condition of the current furnaces.

✓ 17. How long is each melt?

18. What is the process for heating & cooling furnace for each melt & filling & draining.

19. Where does used refractory go?

20. For any compound selenium, cobalt, etc. What is batch recipes? How much is retained in the glass?
↳ Can you analyze.

21. Is there any electric melting.

Records Request for Spectrum Glass

→ Send to Katie McClintock, EPA

Copy Today

- MSDS for refractory for electric #3 above and below glass line. channels,
- charge sheet w/ times, charge, cook, # idle down x2
- Batch baghouse tests for ~~[illegible]~~ waste categorization
- MSDS for metals, arsenic, cadmium, chromium, lead.
- one week of batch tickets.
-

Later

- Batch records, recipes and daily recipes for 2 months
- ~~Furnace Specs~~
- Coatings information - MSDSs
- 2010 waste analysis on all baghouse dust - composition of furnace baghouse dust
- Schematic for each furnace, day tank including burner placement, exhaust. Size.
- Inventory & usage per month for last 3 years.
- ~~Refracting materia~~
- ✓ Formulator plan per month. Final
  ↳ send 2 months.
- Baghouse temperature reading locations and readouts ~~printouts for last two~~ 1 week soon, 3 month electronic
- Baghouse designs and flowrates. → Max temperature of material
- Which products do you divert baghouse flow.
- MSDSs of all refractory in contact with glass or combustion.

To: Tkacz, Borys -FS[btkacz@fs.fed.us]
From: McClintock, Katie
Sent: Thur 3/3/2016 3:02:30 AM
Subject: Re: Air Toxics and Moss Sampling in SE Portland

It looks like you work off hours too. I also work evenings if you prefer. I could talk tonight around 8:30. Up to you. 206-553-2143. Tomorrow 12-12:45 will work.

Katie

Sent from my iPhone

On Mar 2, 2016, at 6:52 PM, Tkacz, Borys -FS <btkacz@fs.fed.us> wrote:

I'm in a meeting tomorrow morning but will try to reach you between 12 and 12:45.

Borys Tkacz
Assistant Director for Research
Forest Service

Pacific Northwest Research Station
p: 503-808-2115
c: 503-867-0570
f: 503-808-2130
btkacz@fs.fed.us
1220 SW Third Ave., Suite 1400
Portland, OR 97204
www.fs.fed.us

Caring for the land and serving people

On Mar 2, 2016, at 6:44 PM, McClintock, Katie <McClintock.Katie@epa.gov> wrote:

Are you free sometime 9-10:30 tomorrow? I can also probably do 12-12:45.

Sent from my iPhone

On Mar 2, 2016, at 3:56 PM, Tkacz, Borys -FS <btkacz@fs.fed.us> wrote:

Hi Katie: Please let me know when would be a good time to talk about this issue.

Best,

Borys

Borys Tkacz
Assistant Director for Research
Forest Service

Pacific Northwest Research Station
p: 503-808-2115
c: 503-867-0570
f: 503-808-2130
btkacz@fs.fed.us
1220 SW Third Ave., Suite 1400
Portland, OR 97204
www.fs.fed.us
<image010.png><image017.png><image018.png>
Caring for the land and serving people

From: Tkacz, Borys -FS
Sent: Wednesday, March 02, 2016 3:53 PM
To: 'Kubo, Teresa' <Kubo.Teresa@epa.gov>
Cc: McClintock, Katie <McClintock.Katie@epa.gov>; Smith, Judy <Smith.Judy@epa.gov>
Subject: RE: Air Toxics and Moss Sampling in SE Portland

Teresa: Thank you for your quick response. I appreciate the contacts you provided and the background on contacts with Geoff Donovan, our lead scientist on this study. As this is a rapidly developing issue, I think it's important for us to

communicate at the various levels in our respective organizations. I will follow up with Katie and will put Judy in touch with our communications specialists.

Best,

Borys

Borys Tkacz
Assistant Director for Research
Forest Service

Pacific Northwest Research Station
p: 503-808-2115
c: 503-867-0570
f: 503-808-2130
btkacz@fs.fed.us
1220 SW Third Ave., Suite 1400
Portland, OR 97204
www.fs.fed.us
<image003.png><image004.png>
Caring for the land and serving people

From: Kubo, Teresa [mailto:Kubo.Teresa@epa.gov]
Sent: Wednesday, March 02, 2016 12:40 PM
To: Tkacz, Borys -FS <btkacz@fs.fed.us>
Cc: McClintock, Katie <McClintock.Katie@epa.gov>; Smith, Judy <Smith.Judy@epa.gov>
Subject: FW: Air Toxics and Moss Sampling in SE Portland

Hi Borys,

Following up on our conversation at SMG this morning about air toxics, a good connection at EPA is Katie McClintock (copied on this message). She is familiar with the issues and all of the players at EPA and is generally serving as our point of contact on issues evolving out of the air toxics research.

I also wanted to note, however, that Geoff Donovan recently made contact with Judy Smith (a communications and outreach specialist in our Oregon Operations Office) and she connected him by email with a few of our researchers. I am including her email below so you can see what coordination has already taken place.

Best regards,

Teresa

Teresa Kubo

Environmental Review and Sediment Management

US EPA Oregon Operations

805 SW Broadway, Ste 500

Portland, Oregon 97205

Tel. 503-326-2859

From: Smith, Judy
Sent: Friday, February 26, 2016 3:57 PM
To: gdonovan@fs.fed.us
Cc: Watkins, Tim; Wayland, Richard; Landers, Dixon
Subject: Air Toxics and Moss Sampling in SE Portland

Hi Geoff –

This e-mail is to follow up on our conversation about your soon to be published moss study and who at our agency would be a potential contact for a discussion about next steps in information gathering, potentially a collaborative effort between EPA and the Forest Service to see if there is a way to calibrate your bio-monitoring with air monitoring data. (Sorry that's not very accurate or eloquent as I multitask).

The following three people were suggested. I've copied them on this e-mail, not knowing if they are aware of recent air toxics developments here in Portland, Oregon.

Tim Watkins	Watkins.tim@epa.gov	919-541-5114
Chet Wayland	wayland.richard@epa.gov	919-541-4603
Dixon Landers	landers.dixon@epa.gov	541-754-4427

Here is the link to the Oregon Department of Environmental Quality Website that provides some background: http://www.deq.state.or.us/nwr/metalsemissions.htm

Judy

~~~~~~~~~~~~~~~~~~~~~~~~~~~~~~~~~~

Judy Smith, EPA

Public Affairs Specialist

503-326-6994 desk

503-545-2540 cell

~~~~~~~~~~~~~~~~~~~~~~~~~~~~~~~~~~

<image011.png> <image012.png> <image013.png> <image015.png><image016.png>

This electronic message contains information generated by the USDA solely for the intended recipients. Any unauthorized interception of this message or the use

or disclosure of the information it contains may violate the law and subject the violator to civil or criminal penalties. If you believe you have received this message in error, please notify the sender and delete the email immediately.

<image009.png>

<image018.png>

<image001.png>

<image002.png>

<image003.png>

<image014.png>

To: Tkacz, Borys -FS[btkacz@fs.fed.us]
From: McClintock, Katie
Sent: Thur 3/3/2016 2:44:19 AM
Subject: Re: Air Toxics and Moss Sampling in SE Portland

Are you free sometime 9-10:30 tomorrow? I can also probably do 12-12:45.

Sent from my iPhone

On Mar 2, 2016, at 3:56 PM, Tkacz, Borys -FS <btkacz@fs.fed.us> wrote:

Hi Katie: Please let me know when would be a good time to talk about this issue.

Best,

Borys

Borys Tkacz
Assistant Director for Research
Forest Service

Pacific Northwest Research Station
p: 503-808-2115
c: 503-867-0570
f: 503-808-2130
btkacz@fs.fed.us
1220 SW Third Ave., Suite 1400
Portland, OR 97204
www.fs.fed.us
<image017.png>
Caring for the land and serving people

From: Tkacz, Borys -FS
Sent: Wednesday, March 02, 2016 3:53 PM
To: 'Kubo, Teresa' <Kubo.Teresa@epa.gov>
Cc: McClintock, Katie <McClintock.Katie@epa.gov>; Smith, Judy <Smith.Judy@epa.gov>
Subject: RE: Air Toxics and Moss Sampling in SE Portland

Teresa: Thank you for your quick response. I appreciate the contacts you provided and the background on contacts with Geoff Donovan, our lead scientist on this study. As this is a rapidly developing issue, I think it's important for us to communicate at the various levels in our respective organizations. I will follow up with Katie and will put Judy in touch with our communications specialists.

Best,

Borys

Borys Tkacz
Assistant Director for Research
Forest Service

Pacific Northwest Research Station
p: 503-808-2115
c: 503-867-0570
f: 503-808-2130
btkacz@fs.fed.us
1220 SW Third Ave., Suite 1400
Portland, OR 97204
www.fs.fed.us

Caring for the land and serving people

From: Kubo, Teresa [mailto:Kubo.Teresa@epa.gov]
Sent: Wednesday, March 02, 2016 12:40 PM
To: Tkacz, Borys -FS <btkacz@fs.fed.us>
Cc: McClintock, Katie <McClintock.Katie@epa.gov>; Smith, Judy <Smith.Judy@epa.gov>
Subject: FW: Air Toxics and Moss Sampling in SE Portland

Hi Borys,

Following up on our conversation at SMG this morning about air toxics, a good connection at EPA is Katie McClintock (copied on this message). She is familiar with the issues and all of the players at EPA and is generally serving as our point of contact on issues evolving out of the air toxics research.

I also wanted to note, however, that Geoff Donovan recently made contact with Judy Smith (a communications and outreach specialist in our Oregon Operations Office) and she connected him by email with a few of our researchers. I am including her email below so you can see what coordination has already taken place.

Best regards,

Teresa

Teresa Kubo

Environmental Review and Sediment Management

US EPA Oregon Operations

805 SW Broadway, Ste 500

Portland, Oregon 97205

Tel. 503-326-2859

From: Smith, Judy
Sent: Friday, February 26, 2016 3:57 PM
To: gdonovan@fs.fed.us
Cc: Watkins, Tim; Wayland, Richard; Landers, Dixon
Subject: Air Toxics and Moss Sampling in SE Portland

Hi Geoff –

This e-mail is to follow up on our conversation about your soon to be published moss study and who at our agency would be a potential contact for a discussion about next steps in information gathering, potentially a collaborative effort between EPA and the Forest Service to see if there is a way to calibrate your bio-monitoring with air monitoring data. (Sorry that's not very accurate or eloquent as I multitask).

The following three people were suggested. I've copied them on this e-mail, not knowing if they are aware of recent air toxics developments here in Portland, Oregon.

Tim Watkins	Watkins.tim@epa.gov	919-541-5114
Chet Wayland	wayland.richard@epa.gov	919-541-4603
Dixon Landers	landers.dixon@epa.gov	541-754-4427

Here is the link to the Oregon Department of Environmental Quality Website that provides some background: http://www.deq.state.or.us/nwr/metalsemissions.htm

Judy

~~~~~~~~~~~~~~~~~~~~~~~~~~~~~~~~~~

Judy Smith, EPA

Public Affairs Specialist

503-326-6994 desk

503-545-2540 cell

~~~~~~~~~~~~~~~~~~~~~~~~~~~~~~~~~~

<image011.png> <image012.png> <image013.png> <image015.png><image016.png>

This electronic message contains information generated by the USDA solely for the intended recipients. Any unauthorized interception of this message or the use or disclosure of the information it contains may violate the law and subject the violator to civil or

criminal penalties. If you believe you have received this message in error, please notify the sender and delete the email immediately.

To: Kubo, Teresa[Kubo.Teresa@epa.gov]
From: McClintock, Katie
Sent: Wed 3/2/2016 8:47:34 PM
Subject: RE: Air Toxics and Moss Sampling in SE Portland

Hi Teresa –

Thanks for getting back to them. I don't think we have spoken before. Are you involved in this effort? Should I be adding you to any of our contact lists or including you on FOIA responses?

From: Kubo, Teresa
Sent: Wednesday, March 02, 2016 12:40 PM
To: Tkacz, Borys -FS <btkacz@fs.fed.us>
Cc: McClintock, Katie <McClintock.Katie@epa.gov>; Smith, Judy <Smith.Judy@epa.gov>
Subject: FW: Air Toxics and Moss Sampling in SE Portland

Hi Borys,

Following up on our conversation at SMG this morning about air toxics, a good connection at EPA is Katie McClintock (copied on this message). She is familiar with the issues and all of the players at EPA and is generally serving as our point of contact on issues evolving out of the air toxics research.

I also wanted to note, however, that Geoff Donovan recently made contact with Judy Smith (a communications and outreach specialist in our Oregon Operations Office) and she connected him by email with a few of our researchers. I am including her email below so you can see what coordination has already taken place.

Best regards,

Teresa

Teresa Kubo

Environmental Review and Sediment Management

US EPA Oregon Operations

805 SW Broadway, Ste 500

Portland, Oregon 97205

Tel. 503-326-2859

From: Smith, Judy
Sent: Friday, February 26, 2016 3:57 PM
To: gdonovan@fs.fed.us
Cc: Watkins, Tim; Wayland, Richard; Landers, Dixon
Subject: Air Toxics and Moss Sampling in SE Portland

Hi Geoff –

This e-mail is to follow up on our conversation about your soon to be published moss study and who at our agency would be a potential contact for a discussion about next steps in information gathering, potentially a collaborative effort between EPA and the Forest Service to see if there is a way to calibrate your bio-monitoring with air monitoring data. (Sorry that's not very accurate or eloquent as I multitask).

The following three people were suggested. I've copied them on this e-mail, not knowing if they are aware of recent air toxics developments here in Portland, Oregon.

Tim Watkins	Watkins.tim@epa.gov	919-541-5114
Chet Wayland	wayland.richard@epa.gov	919-541-4603
Dixon Landers	landers.dixon@epa.gov	541-754-4427

Here is the link to the Oregon Department of Environmental Quality Website that provides some background: http://www.deq.state.or.us/nwr/metalsemissions.htm

Judy

~~~~~~~~~~~~~~~~~~~~~~~~~~~~~~~~~~

Judy Smith, EPA

Public Affairs Specialist

503-326-6994 desk

503-545-2540 cell

~~~~~~~~~~~~~~~~~~~~~~~~~~~~~~~~~~

To: Narvaez, Madonna[Narvaez.Madonna@epa.gov]
From: McClintock, Katie
Sent: Wed 3/2/2016 7:05:46 PM
Subject: RE: Portland glass facilities

No, I have not received it. Let me ask for it.

From: Narvaez, Madonna
Sent: Wednesday, March 02, 2016 11:05 AM
To: McClintock, Katie <McClintock.Katie@epa.gov>
Subject: RE: Portland glass facilities

Is the OR list on the OneDrive?

From: McClintock, Katie
Sent: Wednesday, March 02, 2016 11:04 AM
To: Narvaez, Madonna <Narvaez.Madonna@epa.gov>
Subject: RE: Portland glass facilities

My list is the 3 big ones: Bullseye, Spectrum, Uroboros

The 4 borisillicate: Trautman Art Glass, Northstar Glass, Glass Alchemy and Momka's Glass

Other leads that are probably smaller: Fremont Antique Glass, Glassy Baby

OR has a much more comprehensive list that might show other sources as well.

Katie

From: Narvaez, Madonna

Sent: Wednesday, March 02, 2016 10:29 AM
To: McClintock, Katie <McClintock.Katie@epa.gov>
Subject: FW: Portland glass facilities

Katie, I didn't realize that we're supposed to give input as well. I thought it was just the other regions. Do you have other potential facilities that you haven't mentioned in the daily updates? I'll go through them to pick out the R10 facilities that may not be on the OAQPS list. Thanks!

From: Hastings, Janis
Sent: Friday, February 26, 2016 4:54 PM
To: Dossett, Donald <Dossett.Donald@epa.gov>
Cc: Narvaez, Madonna <Narvaez.Madonna@epa.gov>; Bray, Dave <Bray.Dave@epa.gov>; Edmondson, Lucy <Edmondson.Lucy@epa.gov>
Subject: FW: Portland glass facilities

Don, would Madonna be the appropriate person to coordinate our response for Region 10? Due date: March 9.

Also, could you reach out to Ecology's air permits manager? I already had a discussion with Stu Clark over a week ago about Spectrum, so he is already generally aware of the issue. I left him a voicemail today to let him know that we would be contacting his permitting staff for information.

Attached is EPA's current desk statement, which you are welcome to share with Ecology. Also, the following ODEQ summary may be useful to forward, if your state contacts are unaware of the issue: http://www.deq.state.or.us/nwr/docs/metalsem/FSDEQAdressingAirToxics.pdf. ODEQ is providing regular updates and technical information on the Portland Metals website at http://www.deq.state.or.us/nwr/metalsemissions.htm.

Thanks,

Jan

From: McCabe, Janet
Sent: Thursday, February 25, 2016 4:09 PM
To: Air Division Directors and Deputies <Air_Division_Directors_and_Deputies@epa.gov>
Cc: Koerber, Mike <Koerber.Mike@epa.gov>; Page, Steve <Page.Steve@epa.gov>; Giles-AA, Cynthia <Giles-AA.Cynthia@epa.gov>; McLerran, Dennis <mclerran.dennis@epa.gov>; Hastings, Janis <Hastings.Janis@epa.gov>; Stewart, Lori <Stewart.Lori@epa.gov>; Goffman, Joseph <Goffman.Joseph@epa.gov>; Cyran, Carissa <Cyran.Carissa@epa.gov>; Wortman, Eric <Wortman.Eric@epa.gov>
Subject: Portland glass facilities

Air Division Directors—

Attached is a memo in followup to the special purpose call OAQPS held yesterday about the glass facilities in Portland and beyond. Please contact Mike Koerber if you have any questions.

To: Narvaez, Madonna[Narvaez.Madonna@epa.gov]
From: McClintock, Katie
Sent: Wed 3/2/2016 7:04:05 PM
Subject: RE: Portland glass facilities

My list is the 3 big ones: Bullseye, Spectrum, Uroboros

The 4 borisillicate: Trautman Art Glass, Northstar Glass, Glass Alchemy and Momka's Glass

Other leads that are probably smaller: Fremont Antique Glass, Glassy Baby

OR has a much more comprehensive list that might show other sources as well.

Katie

From: Narvaez, Madonna
Sent: Wednesday, March 02, 2016 10:29 AM
To: McClintock, Katie <McClintock.Katie@epa.gov>
Subject: FW: Portland glass facilities

Katie, I didn't realize that we're supposed to give input as well. I thought it was just the other regions. Do you have other potential facilities that you haven't mentioned in the daily updates? I'll go through them to pick out the R10 facilities that may not be on the OAQPS list. Thanks!

From: Hastings, Janis
Sent: Friday, February 26, 2016 4:54 PM
To: Dossett, Donald <Dossett.Donald@epa.gov>
Cc: Narvaez, Madonna <Narvaez.Madonna@epa.gov>; Bray, Dave <Bray.Dave@epa.gov>; Edmondson, Lucy <Edmondson.Lucy@epa.gov>
Subject: FW: Portland glass facilities

Don, would Madonna be the appropriate person to coordinate our response for Region 10? Due date: March 9.

Also, could you reach out to Ecology's air permits manager? I already had a discussion with Stu Clark over a week ago about Spectrum, so he is already generally aware of the issue. I left him a voicemail today to let him know that we would be contacting his permitting staff for information.

Attached is EPA's current desk statement, which you are welcome to share with Ecology. Also, the following ODEQ summary may be useful to forward, if your state contacts are unaware of the issue: http://www.deq.state.or.us/nwr/docs/metalsem/FSDEQAdressingAirToxics.pdf. ODEQ is providing regular updates and technical information on the Portland Metals website at http://www.deq.state.or.us/nwr/metalsemissions.htm.

Thanks,

Jan

From: McCabe, Janet
Sent: Thursday, February 25, 2016 4:09 PM
To: Air Division Directors and Deputies <Air_Division_Directors_and_Deputies@epa.gov>
Cc: Koerber, Mike <Koerber.Mike@epa.gov>; Page, Steve <Page.Steve@epa.gov>; Giles-AA, Cynthia <Giles-AA.Cynthia@epa.gov>; McLerran, Dennis <mclerran.dennis@epa.gov>; Hastings, Janis <Hastings.Janis@epa.gov>; Stewart, Lori <Stewart.Lori@epa.gov>; Goffman, Joseph <Goffman.Joseph@epa.gov>; Cyran, Carissa <Cyran.Carissa@epa.gov>; Wortman, Eric <Wortman.Eric@epa.gov>
Subject: Portland glass facilities

Air Division Directors—

Attached is a memo in followup to the special purpose call OAQPS held yesterday about the glass facilities in Portland and beyond. Please contact Mike Koerber if you have any questions.

To: Taylor, Kevin[Taylor.Kevin@epa.gov]; Dubose, Dick[DuBose.Dick@epa.gov]
From: McClintock, Katie
Sent: Wed 3/2/2016 5:22:08 PM
Subject: RE: Please Call Us About Stained Glass

No problem. I'm grateful that you guys are responding so quickly. This is what we hoped for. I can't wait to hear from you next week!

From: Taylor, Kevin
Sent: Wednesday, March 02, 2016 9:03 AM
To: McClintock, Katie <McClintock.Katie@epa.gov>; Dubose, Dick <DuBose.Dick@epa.gov>
Subject: RE: Please Call Us About Stained Glass

Katie,

Thank you so much for taking the time to scan and send it. I know that your plate is full right now and I appreciate your time and consideration. I will let you know how it goes tomorrow when you are available next week.

Thanks again.

Sincerely,

Kevin I. Taylor

Environmental Engineer

U.S. EPA Region 4

Air Enforcement Section, 12th Floor

61 Forsyth Street, S.W.

Atlanta, Georgia 30303

(404) 562-9134

(404) 562-9163 (fax)

Email: taylor.kevin@epa.gov

From: McClintock, Katie
Sent: Wednesday, March 02, 2016 11:49 AM
To: Dubose, Dick <DuBose.Dick@epa.gov>
Cc: Taylor, Kevin <Taylor.Kevin@epa.gov>
Subject: RE: Please Call Us About Stained Glass

It the interest of getting you something soon rather than nothing too late, I am just scanning in my inspection questions from bullseye (asked similar things at all 3) and the written questions I left for each facility.

I apologize that this will take some processing on your part but fear that I won't have the time to synthesize everything.

Katie

Note – we have a lot of FOIAs. So preserve documents.

From: Dubose, Dick
Sent: Wednesday, March 02, 2016 7:43 AM
To: McClintock, Katie <McClintock.Katie@epa.gov>
Cc: Taylor, Kevin <Taylor.Kevin@epa.gov>
Subject: Please Call Us About Stained Glass

Katie:

Can you call me at 404-562-9168 or Kevin Taylor at 404-562-9134.

Thank you,

Dick DuBose

To: Dubose, Dick[DuBose.Dick@epa.gov]
Cc: Taylor, Kevin[Taylor.Kevin@epa.gov]
From: McClintock, Katie
Sent: Wed 3/2/2016 4:49:26 PM
Subject: RE: Please Call Us About Stained Glass
Spectrum Glass Questions left after Inspection.jpeg
Questions left for Uroboros after Inspection.jpeg
Inspection Questions.jpeg
Questions left with Bullseye.jpeg

It the interest of getting you something soon rather than nothing too late, I am just scanning in my inspection questions from bullseye (asked similar things at all 3) and the written questions I left for each facility.

I apologize that this will take some processing on your part but fear that I won't have the time to synthesize everything.

Katie

Note – we have a lot of FOIAs. So preserve documents.

From: Dubose, Dick
Sent: Wednesday, March 02, 2016 7:43 AM
To: McClintock, Katie <McClintock.Katie@epa.gov>
Cc: Taylor, Kevin <Taylor.Kevin@epa.gov>
Subject: Please Call Us About Stained Glass

Katie:

Can you call me at 404-562-9168 or Kevin Taylor at 404-562-9134.

Thank you,

Dick DuBose

Records Request from Bullseye Glass 2/10/16

Send example first

1. Refractory materials for tank & superstructure. Invoices & material information for each furnace in operation 3 yrs.
2. Temperature readings for each furnace back to 10/1/15. In spreadsheet form.
3. Products run w/ furnace, product, date ~~on each day in October~~. since 10/1/15 Batch schedules
4. Batch recipes w/ MSDS for various ~~product~~ raw materials since 10/1/15
5. Size of each furnace by furnace number
6. Schematic of the furnace

→ Some info by Friday. Check in Friday

Copyleft will
Bullseye 2/10/16

Records Request for Spectrum Glass

→ Send to Katie McClintock, EDA

Copy Today

- ✗ MSDS for refractory for electric #3 above and below glass line. channels,
- charge sheet w/ times, charge, cook, # idle down x2
- Batch baghouse tests for ~~[illegible]~~ waste categorization
- MSDS for metals, arsenic, cadmium, chromium, lead.
- one week of batch tickets.
-

Later

- Batch records, recipes and daily recipes for 2 months
- ~~Furnace Specs~~ →
- Coatings information - MSDSs
- 2010 waste analysis on all baghouse dust - composition of furnace baghouse dust
- Schematic for each furnace, day tank including burner placement, exhaust. Size.
- Inventory & usage per month for last 3 years.
- ~~Refractory matrix~~
- ✓ Formulator plan per month. Final
  ↳ send 2 months.
- Baghouse temperature reading locations and readouts ~~printouts for last two~~ 1 week soon, 3 month electronic
- Baghouse designs and flowrates. → Max temperature of material
- Which products do you divert baghouse flow.
- MSDSs of all refractory in contact with glass or combustion.

Bullseye Glass

✓ Describe furnaces & ages, NG firing rates

✓ 1. What is your refractory made out of for each furnace? Do they have chromium

✓ 2. What temperature are you melting the glass?

3. Describe process

4. Describe emissions

✓ 5. How many furnaces are oxyfuel, ~~how m~~ – when did they convert?

✓ 6. How much glass do you make per month? Per Year

7. How much chromium do you add? Which products? Hex or Tri?
What happened on 10/6 & 10/24?

8. Go through other high days, were they related to a certain product?

9. [redacted] Some emissions were detected every day at reasonably high quantities & some are variable.

✓ 10. What parts of the furnaces have chromium refractory & %! » at or above melt line

— 11. Raw material handling. Silica emissions. Baghouse

— 12. Look at Frit process, emissions, baghouse

✓ 13. Where do furnaces exhaust.

✓ 14. Where do you measure temperature in the furnaces & what is recorded?

✓ 15. How often are the furnaces rebricked?

16. What is the current schedule & what is the condition of the current furnaces.

✓ 17. How long is each melt?

18. What is the process for heating & cooling furnace for each melt & filling & draining.

19. Where does used refractory go?

20. For any compound selenium, cobalt, etc. What is batch recipes? How much is retained in the glass?
↳ Can you analyze.

21. Is there any electric melting.

Uroboros Questions 2/11/16 - Copy to oregon

8 1. Refractory materials for tank & superstructure. Invoices & material information (MSDS) for each furnace, back a few years.

7 2. Temperature readings for each furnace back to 10/1/15 in spreadsheet format

3 3. Products run on each furnace with batch ticket, product, date. Since 10/1/15. ~~&~~ Include furnace #.

4 4. Batch recipes w/ MSDS for all raw materials. Any product made since 10/1/15.

2 ↳ all chromium ~~based~~ containing recipes immediately

5. ~~Glass reten~~ Metals retained in the glass for each product or category & source of information.

1 6. Size and design of each furnace by number with a plant diagram w/ furnace numbers. Size in ~~tons~~ holding capacity & tons/hr, batches per year, tons/yr.

6 7. Schematic of each type of furnace.

5 8. Date of original construction of each furnace.

Copy left on site 2/11

Lance will call Tuesday/Wednesday

To: Dubose, Dick[DuBose.Dick@epa.gov]; Taylor, Kevin[Taylor.Kevin@epa.gov]
From: McClintock, Katie
Sent: Wed 3/2/2016 4:28:32 PM
Subject: Colored Glass 114 Draft - sf 20-16-02-16
Colored Glass 114 Draft - sf 20-16-02-16.docx

Here is the VERY ROUGH draft 114

CERTIFIED MAIL
RETURN RECEIPT REQUESTED

John O'Donnell
CEO
Kokomo Opalescent Glass
1310 South Market Street
Kokomo, IN 46902

Re: Supplemental Request to Provide Information Pursuant to Section 114 of the Clean Air Act

Dear Mr. O'Donnell,

The enclosed supplemental information request is being issued to you pursuant to Section 114 of the Clean Air Act (CAA), 42 U.S.C. § 7414. The Environmental Protection Agency is seeking additional information concerning Kokomo Opalescent Glass' facility in Kokomo, IN.

Under Section 114 of the CAA, EPA is authorized to require the submission of records, reports, and other information for the purpose of determining whether any violations of the CAA have occurred. In accordance with this authority, you are hereby served the enclosed Information Request, and required to provide the requested responses and documents within seven (7) days of receipt of this Request for questions 1-8. Provide the remaining responses within (30) days of receipt of this Request. See Enclosures 1 and 2 for the instructions, definitions, and Information Requests.

You must submit a copy of the full response to:

Sara Froikin
Stationary Source Enforcement Branch
Air Enforcement Division
U.S. Environmental Protection Agency
SARA's ADDRESS

Katie McClintock
EPA Region 10
1200 Sixth Avenue, Suite 900
Seattle, WA 98101

Regional contact

Failure to provide the required information in a timely manner may lead to civil action to obtain compliance or to recover a civil penalty in accordance with Section 113 of the CAA, 42 U.S.C. § 7413. EPA also has authority to seek criminal penalties from any person who knowingly makes any false statement, representation, or certification. Even if you fully comply with this letter, you may still be subject to administrative, civil, or criminal action as provided by the CAA.

You are entitled to assert a claim of business confidentiality, covering all or any required information, in the manner described at 40 C.F.R. § 2.203(b). See Enclosure 3 for instructions on assertion of business confidentiality claims. Note that emissions data, which includes information necessary to determine the identity, amount, frequency, concentration, or other characteristics (to the extent related to air quality) of emission data, is not entitled to confidential treatment. Information subject to a claim of business confidentiality will be made available to the public only in accordance with the procedures set forth at 40 C.F.R. Part 2, Subpart B. Unless a confidentiality claim is asserted at the time the required information is provided, EPA may make this information available to the public without further notice to you.

This required submission of information is not subject to the approval requirements of the Paperwork Reduction Act of 1980, 44 U.S.C. §§ 3501, et seq.

Any technical questions regarding this Information Request should be directed to Katie McClintock, Office of Civil Enforcement, at (206) 553-2143, mcclintock.katie@epa.gov; for legal matters, contact Sara Froikin, Office of Civil Enforcement, at (212) 637-3263, froikin.sara@epa.gov

Sincerely,

Phillip A. Brooks, Director
Air Enforcement Division

Enclosures (3)

cc: regional contact
Katie McClintock, EPA
Sara Froikin, EPA

ENCLOSURE 1

A. INSTRUCTIONS:

1) Please provide a separate narrative response to each Information Request and subpart of an Information Request set forth in Enclosure 2 of this Information Request and precede each answer with the number of the Information Request to which it corresponds.

2) For each Information Request, identify each person responding to any Information Request contained in this Information Request on your behalf, as well as each person consulted in the preparation of a response.

3) For each Information Request, identify each document consulted, examined, or referred to in the preparation of the response or that contains information responsive to the Information Request, and provide a true and correct copy of each such document if not provided in response to another specific Information Request. Indicate on each document produced in response to this Information Request the number of the Information Request to which it corresponds.

4) If requested information or documents are not known or are not available to you at the time of your response to this Information Request, but later become known or available to you, you must supplement your response to EPA. Moreover, should you find at any time after submission of your response that any portion is or becomes false, incomplete, or misrepresents the facts; you must provide EPA with a corrected response as soon as possible.

5) Requested information can be submitted in electronic form if applicable.

For purposes of this Information Request, the definitions set forth in Section B shall apply and should be considered carefully by you in preparing your responses.

B. DEFINITIONS:

1) "Document" means written documentation of any kind, including documentation solely in electronic form. It includes any document in the possession or control of Kokomo Opalescent Glass or the possession or control of any person or entity acting as an agent of Kokomo Opalescent Glass. A copy of a document rather than the original may be provided.

2) “Facility” means the Kokomo Opalescent Glass facility in Kokomo, Indiana.

3) The terms “person” or “persons” shall have the meaning set forth in Section 302(e) of the Act, 42 U.S.C. § 7602(e), and include an individual, corporation, partnership, association, State, municipality, political subdivision of a State, and any agency, department, or instrumentality of the United States and any officer, agent or employee thereof.

4) The terms "you" or "your", as used above and in each Information Request set forth in Enclosure 2 of this Information Request, refer to, and shall mean, Kokomo Opalescent Glass, including its subsidiaries, divisions, affiliates, predecessors, successors, assigns, and its former and present officers, directors, agents, employees, representatives, attorneys, consultants, accountants and all other persons acting on its behalf.

ENCLOSURE 2

INFORMATION REQUEST

You are hereby required, in accordance with Section 114(a) of the Act, 42 U.S.C. § 7414(a), to provide the following information regarding the Facility.

1. Provide a facility plot plan or diagram of the Facility and a narrative description of all manufacturing processes conducted at the Facility. Both should include, but are not be limited to, all points where any emissions or dust are generated, pollution control devices, raw material receiving/handling, batch mixing, each glass melting furnace, glass coating or etching processes, any glass reheating processes, annealing lehrs, frit and cullet processing, and other units that support glass production.

2. Provide a list of each glass melting furnace currently operating at the Facility.

3. For each furnace identified in response to Question 3, provide the following information:

    a. The type of the furnace (e.g., regenerative, recuperative, oxyfuel, electric);
    b. A schematic of the furnace including the tank size, burner position and exhaust points;
    c. A description of the furnace operation including how often the furnace is cooled down to ambient temperatures;
    d. For furnaces that pull glass out continuously, provide:
        i. The maximum pull of the furnace (tons/hr);
        ii. The holding capacity of the furnace (lbs);
        iii. The maximum pull of the furnace (tons/yr);
    e. For furnaces that melt glass in a batch process, provide:
        i. The maximum holding capacity of the furnace (lbs);
        ii. The maximum and minimum times between the start of two consecutive melts.
        iii. The calculated maximum annual production (tpy) and explanation of the calculation;

4. Annual production (tpy) from each furnace for the last 5 years.

5. Provide a copy of the current air permit for the facility (if applicable) and the engineering support document.

6. A list of all raw materials used at the facility in the last 3 years and the material safety data sheet (MSDS) for each.

7. Provide purchase invoices for all compounds containing chromium, cadmium, arsenic, nickel and lead for the past 3 years.

8. A complete list of all batch recipes that the company has made in the last 3 years.

9. Daily batch records for the last year. For each batch indicate the date and furnace number as well as the complete ingredient list and quantity.

10. Glass coating/etching?

11. For each furnace identified in response to question 3, provide:

    a. An explanation of how raw materials are charged into the furnace;
    b. The fuel fired in the furnace and the maximum combined firing rate (mmbtu/hr) for the burners in the furnace.
    c. The amount of electricity used to melt glass, if used..
    d. The date the furnace began operation;
    e. Any dates after 1986 that the Furnace was converted from air to oxyfuel, enlarged in size, or modified to increase air emissions. Provide the date of the project, a description of the project, and the effect on emissions and production.
    f. The dates of the last rebricking on the furnace.
    g. A list of all instances in the last 5 years when the furnace has been cooled to ambient temperature for a reason other than maintenance, malfunction, control device installation, reconstruction or rebuilding. If so explain the date, the reason, and the length of time the furnace was at ambient temperature.

12. For each furnace identified in response to question 3, identify and describe any combustion or post-combustion emission control equipment or practices that are used for any reason. For each, provide the following information and provide data to support the answers:

    a. The reason the equipment was installed, the date of the installation and the pollutant(s) the equipment is designed to reduce.
    b. Describe in detail how each emission control equipment or reduction practice limits air emissions from each source, and how effectively (in terms of removal efficiency, capture efficiency, distribution efficiency, etc.) each air emission is limited by the corresponding equipment or practice.
    c. Any engineering documents for the control device related to the emissions reduction performance of the controls device.
    d. Any engineering documents for any capture system associated with the control device.
    e. If there is any monitoring of the device (temperature, pressure, etc) that is a parameter for performance, provide the source test establishing the parameter and the last year

of records of that parameter.

13. Is the facility subject to Part 61, Subpart N? If so, provide the following records for the last two years:
    a. Annual emissions of arsenic from each furnace.
    b. All records required under 40 C.F.R. § 61.165.

14. Is the facility subject to Part 63, Subpart SSSSSS? If no furnaces are subject, explain for each why it is not subject. For any units that are subject provide a copy of the notifications required under 40 C.F.R. § 63.11456 and the last two years of records required under 40 C.F.R § 63.11457.

15. For raw material handling, provide a schematic of the batch mixing setup including the original batch mixing, mixing of the colorants, transfer of the batch to the blender, blending of the batch, transfer of the batch out of the blender, and charging the raw materials into the furnace. For each point, provide an explanation of any air pollution capture system, flow rates if known, and any design of the rooms/air system to limit dust creation. For each collection system, provide the total flow rates for each intake and the design flow rate of the system.

16. Does the Facility crush glass to sell as frit or for other disposal? If yes, provide a detailed schematic of the crushing operation. For each point of emissions in the process, provide an explanation of any air pollution capture efforts at that point including an explanation and drawing of the capture system. If the frit process is enclosed in any larger room, explain how this is done, openings to the larger factory and whether the room exhaust is vented to a control device. For the collection system, provide the total flow rates for each intake and the design flow rate of the system.

17. Does the facility spray any coatings on the glass? If so, describe the process in detail (including a detailed description of the process step where the coatings are applied), the chemicals sprayed along with their MSDSs, the quantity of each chemical used each year for the last 3 years, a description of emissions from the process (including a description of any visible emissions during coating) and a description of any emissions capture/control system.

18. For each baghouse, explain what is done with the baghouse dust. If the dust is melted onsite, explain where it is stored before melting, which furnace it is melted in, the frequency of the melting and what is done with the glass after melting.

19. Provide copies of each stack emissions test conducted on each furnace or baghouse stack since 1990. This request includes tests done to determine compliance with permits or regulatory standards, engineering tests, and tests for general information. Provide the batch records for all glasses made in furnaces, routed into the furnace, or batches mixed/blended that were routed into the baghouse.

20. Provide information on the refractory the Facility uses in their furnaces, both for the tanks of the furnaces and the superstructure. If the Facility uses different refractory in different

furnaces, provide information on the refractory products used in each furnace. For each refractory, provide the MSDS from the manufacturer and an invoice. If the facility uses the same refractory in each tank and superstructure, provide invoices since January 1, 2014.

21. For each furnace that measures temperature inside of the furnace, provide:
    a. The point where the temperature is measured;
    b. Temperature readings for the last year (on the frequency recorded) in spreadsheet format.

ENCLOSURE 3

CONFIDENTIAL BUSINESS INFORMATION ASSERTION AND SUBSTANTIATION REQUIREMENTS

A. Assertion Requirements

You may assert a business confidentiality claim covering all or part of the information requested in response to this information request, as provided in 40 C.F.R. Section 2.203(b). You may assert a business confidentiality claim covering such information by placing on (or attaching to) the information you desire to assert a confidentiality claim, at the time it is submitted to the EPA, a cover sheet, stamped, or typed legend (or other suitable form of notice) employing language such as "trade secret" or "proprietary" or "company confidential." Allegedly confidential portions of otherwise non-confidential documents should be clearly identified, and may be submitted separately to facilitate identification and handling by the EPA. If you desire confidential treatment only until a certain date or until the occurrence of a certain event, the notice should so state. Information covered by such a claim will be disclosed by the EPA only to the extent, and by means of the procedures, set forth in Section 114(c) of the Clean Air Act (the Act) and 40 C.F.R. Part 2. The EPA will construe the failure to furnish a confidentiality claim with your response to the attached letter as a waiver of that claim, and the information may be made available to the public without further notice to you.

B. Substantiation Requirements

All confidentiality claims are subject to the EPA verification in accordance with 40 C.F.R. Part 2, subpart B. The criteria for determining whether material claimed as confidential is entitled to such treatment are set forth at 40 C.F.R. Sections 2.208 and 2.301, which provide, in part, that you must satisfactorily show that you have taken reasonable measures to protect the confidentiality of the information and that you intend to continue to do so; that the information is not and has not been reasonably obtainable by legitimate means without your consent; and the disclosure of the information is likely to cause substantial harm to your business's competitive edge.

Pursuant to 40 C.F.R. Part 2, subpart B, the EPA may at any time send you a letter asking you to substantiate fully your CBI claim. If you receive such a letter, you must provide the EPA with a response within the number of days set forth in the EPA request letter. Failure to submit your

comments within that time would be regarded as a waiver of your confidentiality claim or claims, and the EPA may release the information. If you receive such a letter, the EPA will ask you to specify which portions of the information you consider confidential. You must be specific by page, paragraph, and sentence when identifying the information subject to your claim. Any information not specifically identified as subject to a confidentiality claim may be disclosed without further notice to you. For each item or class of information that you identify as being subject to CBI, you must answer the following questions, giving as much detail as possible, in accordance with 40 C.F.R. 2.204(e):

1. What specific portions of the information are alleged to be entitled to confidential treatment? For what period of time do you request that the information be maintained as confidential, until a certain date, until the occurrence of a specified event, or permanently? If the occurrence of a specific event will eliminate the need for confidentiality, please specify that event.

2. Information submitted to the EPA becomes stale over time. Why should the information you claim as confidential be protected for the time period specified in your answer to question #1?

3. What measures have you taken to protect the information claimed as confidential? Have you disclosed the information to anyone other than a governmental body or someone who is bound by an agreement not to disclose the information further? If so, why should the information still be considered confidential?

4. Is the information contained in any publicly available material such as the Internet, publicly available databases, promotional publications, annual reports, or articles? Is there any means by which a member of the public could obtain access to the information? Is the information of a kind that you would customarily not release to the public?

5. Has any governmental body made a determination as to the confidentiality of the information? If so, please attach a copy of the determination.

6. For each category of information claimed as confidential, explain with specificity why release of the information is likely to cause substantial harm to your competitive position. Explain the specific nature of those harmful effects, why they should be viewed as substantial, and the causal relationship between disclosure and such harmful effects. How could your competitors make use of this information to your detriment?

7. Do you assert that the information is submitted on a voluntary or a mandatory basis? Please explain the reason for your assertion. If you assert that the information is voluntarily submitted information, explain whether and why disclosure of the information would tend to lessen the availability to the EPA of similar information in the future.

8. Any other issue you deem relevant.

Please note that emission data provided under Section 114 of the Act, 42 U.S.C. Section 7414, is not entitled to confidential treatment under 40 C.F.R. Part 2, subpart B.

Emission data means, with reference to any source of emission of any substance into the air:

(A) Information necessary to determine the identity, amount, frequency, concentration, or other characteristics (to the extent related to air quality) of any emission which has been emitted by the source (or of any pollutant resulting from any emission by the source), or any combination of the foregoing;

(B) Information necessary to determine the identity, amount, frequency, concentration, or other characteristics (to the extent related to air quality) of the emissions which, under an applicable standard or limitation, the source was authorized to emit (including, to the extent necessary for such purposes, a description of the manner and rate of operation of the source); and

(C) A general description of the location and/or nature of the source to the extent necessary to identify the source and to distinguish it from other sources (including, to the extent necessary for such purposes, a description of the device, installation, or operation constituting the source).

40 C.F.R. Sections 2.301(a)(2)(i)(A), (B) and (C).

If you receive a request for a substantiation letter from the EPA, you bear the burden of substantiating your confidentiality claim. Conclusory allegations will be given little or no weight in the determination. If you fail to claim the information as confidential, it may be made available to the public without further notice to you.

From: McClintock, Katie
Location: Your place
Importance: Normal
Subject: Accepted: Quick Demo of Colored Glass OneDrive Site
Start Date/Time: Wed 3/2/2016 6:00:00 PM
End Date/Time: Wed 3/2/2016 6:30:00 PM

To: Singelis, Nikos[Singelis.Nikos@epa.gov]
From: McClintock, Katie
Sent: Tue 3/1/2016 10:21:58 PM
Subject: FW: McClintock, Katie has shared 'Colored Glass'

Did you get this earlier?

From: McClintock, Katie
Sent: Tuesday, March 01, 2016 9:24 AM
To: Chow, Alice <chow.alice@epa.gov>; Singelis, Nikos <Singelis.Nikos@epa.gov>
Cc: McClintock, Katie <McClintock.Katie@epa.gov>
Subject: McClintock, Katie has shared 'Colored Glass'

Here's the folder that McClintock, Katie shared with you.

Go to Colored Glass

To: Singelis, Nikos[Singelis.Nikos@epa.gov]
From: McClintock, Katie
Sent: Tue 3/1/2016 10:11:30 PM
Subject: RE: Article from Yesterday on Bullseye Glass

Yeah, these are great articles. If you haven't checkout out our onedrive we have a press folder and a news clips folder that has daily news roundups with a bunch of great articles. My daily updates are in their own folder as well which gives a lot of background on our work.

From: Singelis, Nikos
Sent: Tuesday, March 01, 2016 2:10 PM
To: Chow, Alice <chow.alice@epa.gov>; Arnold, David <arnold.david@epa.gov>; egan, patrick <egan.patrick@epa.gov>; Campbell, Dave <campbell.dave@epa.gov>; McClintock, Katie <McClintock.Katie@epa.gov>; Maldonado, Zelma <Maldonado.Zelma@epa.gov>; Fernandez, Cristina <Fernandez.Cristina@epa.gov>
Subject: RE: Article from Yesterday on Bullseye Glass

Here's another one, which you should read.... FYI

http://www.oregonlive.com/environment/index.ssf/2016/02/how_bullseye_glass_sought_a_ke.html

From: Singelis, Nikos
Sent: Tuesday, March 01, 2016 4:33 PM
To: Chow, Alice <chow.alice@epa.gov>; Arnold, David <arnold.david@epa.gov>; egan, patrick <egan.patrick@epa.gov>; Campbell, Dave <campbell.dave@epa.gov>; McClintock, Katie <McClintock.Katie@epa.gov>; Maldonado, Zelma <Maldonado.Zelma@epa.gov>; Fernandez, Cristina <Fernandez.Cristina@epa.gov>
Subject: Article from Yesterday on Bullseye Glass

http://www.opb.org/news/article/complaints-about-bullseye-glass-date-back-to-1980s/

Nikos

****

Nikos Singelis

Acting Director, Air Protection Division

EPA, Region 3

Philadelphia, PA

(215) 814-2132

To: Kercheval, Stephanie[Kercheval.Stephanie@epa.gov]
From: McClintock, Katie
Sent: Tue 3/1/2016 6:07:30 PM
Subject: Contact List
Contact List.docx

Is definitely out of date, so there will be many more added. I'll try to work on that (in my free time ;))

Contacts list for Color Glass Work

- Region 10:
  - Marianne Holsman – Press
  - Ed Kowalski – Director, Office of Compliance and Enforcement
  - Jan Hastings – Director, Office of Air Waste and Toxics
  - Tony Barber – Oregon Operations Office Director
  - Dave Bray – Advisor to Director of Office of Air Waste and Toxics
  - Katie McClintock – Enforcement Officer, main contact
  - Zach Hedgpeth – Inspector and technical consultant
  - Madonna Narvaez – Regional air toxics coordinator
  - Chris Hall - monitoring
  - Julie Matthews – Attorney lead
  - Kris Leefers – Assigned attorney
  - Scott Downey – Enforcement Manager
  - Judy Smith – Press contact in Oregon Operations Office
  - Julie Wroble, air risk assessor, OEA
  - Marc Stiefelman, metals toxicologist
  - Monica Tonel, office of environmental cleanup
  - Sheila Fleming
  - Chris Field
  - Calvin Terada
  - Wally Moon
  - Richard Franklin
  - Dan Heister
  - Dave Rees
  -
- Region 7
  - Stephanie Doolan – expertise on Fiberglass Wool RTR and hexavalent chromium in EJ areas
- OECA
  - Scott Throwe – OC, looking at 6S applicability
  - Greg Fried – Stationary source air enforcement manager
  - Sara Froikin – Attorney assigned to this project
  - Kathryn Caballero – Attorney in OECA with 303 experience
- ORD
  - Bill Linak of NRMRL/APPCD - Studied chromium reactions at high temperatures in incinerators
- RTP
  - Keith Barnett – group leader for rule writing
  - Susan Fairchild – Writer of glass manufacturing rules
  - Stef Johnson - group leader for stack testing
  - Kristen Benedict – acting group leader for NEI and TRI
  - Anne Pope – modeling
  - Madeleine Strum – emissions inventory group

        - Lewis Weinstock – group leader of ambient air monitoring – helping with study around bullseye
        - David Shelow – group leader for air toxics monitoring and Community Scale Air Toxics Monitoring Grants
        - Kelly Rimer – group leader for air toxics
        - Ted Palma – colead on nata
        - Mike Koerber – Point person beneath Janet McCabe
    - OR
        - David Monro – Manager of permits/enforcement
        - Jaclyn Palermo – Manager working on identifying other sources
        - Greg Grunow – Permit writer for Bullseye and Uroboros
        - George Davis – Senior engineer consulting on resolution for both sources
        - Nina DeConcini – NW Regional Office Director
        - Sarah Armitage – Toxics contact
        - Dick Pederson – ODEQ Director
        - Paul Garrahan – OR Department of Justice

To: Chow, Alice[chow.alice@epa.gov]
From: McClintock, Katie
Sent: Tue 3/1/2016 5:52:16 PM
Subject: RE: My draft email to APMs

My only change would be to say chrome 3 MAY convert because they are firing in a reducing atmosphere which will decrease probability (though not eliminate) of it converting to chrome 6.

From: Chow, Alice
Sent: Tuesday, March 01, 2016 9:51 AM
To: McClintock, Katie <McClintock.Katie@epa.gov>
Subject: My draft email to APMs

Katie: let me know if I've missed something. Alice

Hi! On the ADD call yesterday, R3 volunteered to coordinate the submission of information on art glass facilities listed in Janet McCabe's memo (see attachment). Also, if there are additional sources not on the list, please add that to your regional response. That being said, as you talk to your S/L/Ts, you can use the following to help them better identify the facilities:

•□□□□□□□□ The art, architectural, or colored glass manufacturing facilities of concern are those who melt raw materials (metals) to make their glass, this gives them more control over the colors produced. The facilities would have large distribution of their products.

•□□□□□□□□ Those who are hobby and crafts glass blowers typically buy colored glass to melt down for their projects and due to its small size, are not part of the inquiries at this time.

•□□□□□□□□ EPA is looking for facilities with uncontrolled furnace emissions. There is currently one facility (Spectrum) with a baghouse as a control.

•□□□□□□□□ Arsenic and cadmium are of concern, but so is hexavalent chrome…in fact, chrome+3 converts to chrome+6 in the presence of manganese and high heat.

When you have compiled the requested information, please send it to me by COB, Tuesday,

March 8th. I will forward all responses to Mike Koerber on March 9th. I know this may be a tough turnaround, but we told Mike we'd try our best.

For those who are interested in obtaining monitoring data and other technical information, Katie McClintock, R10 (McClintock.Katie@epa.gov) has created a shared drive site and she also provides daily email updates. Please email her to get access to the shared drive site and/or receive daily updates.

Alice H. Chow

Associate Director

Office of Air Monitoring and Analysis

U.S. EPA, Region III

1650 Arch Street

Philadelphia, PA 19103

Phone: 215-814-2144

Email: chow.alice@epa.gov

To: Koprowski, Paul[Koprowski.Paul@epa.gov]
From: McClintock, Katie
Sent: Tue 3/1/2016 6:26:41 AM
Subject: RE: Call this morning

I didn't see this email until after we talked. If you have more questions, I'm happy to discuss more tomorrow, but I think the guidance will actually serve our purposes best.

From: Koprowski, Paul
Sent: Monday, February 29, 2016 10:43 AM
To: McClintock, Katie <McClintock.Katie@epa.gov>
Subject: Call this morning

What did you think about how HQ has decided to address the applicability issue? I'm a little worried that what they come out with will still leave interpretation issue open. When they mentioned the new "guidance" I thought why not get the source to ask for the applicability determination. At least for PDX and Bullseye that would put the issue to rest.

Paul

Paul Koprowski

U.S. EPA; Oregon Operations Office

805 SW Broadway, Suite 500

Portland, Oregon 97205

(503) 326-6363

To: Abe Fleishman[abef@northstarglass.com]
From: McClintock, Katie
Sent: Tue 3/1/2016 4:12:23 AM
Subject: RE: book names

Thanks Abe. I'll see if my librarian can find. I am not sure I can borrow your copy. I can't share about ongoing conversations with other companies. I'll look at patents as well, thanks.

Katie

From: Abe Fleishman [mailto:abef@northstarglass.com]
Sent: Monday, February 29, 2016 8:11 PM
To: McClintock, Katie <McClintock.Katie@epa.gov>
Subject: Re: book names

Chemical approach to glass by milos volf. The book might be hard to get. I will look tomorrow and see if I can loan you my copy. I also reached out to Alexis at Alfred to get the case study on cadmium glasses. Has anyone asked bullseye or uroboros about their knowledge? This is information we all know about. If you look up us patents there is some info as well.

Abe

On Feb 29, 2016, at 7:49 PM, McClintock, Katie <McClintock.Katie@epa.gov> wrote:

Hi Abe –

Thanks for the call today. I wasn't able to find those books you mentioned. I might have not written them down right. Can you email me the titles when you get a chance.

Katie McClintock

Air Enforcement Officer

EPA Region 10

1200 Sixth Avenue, Suite 900, OCE-101

Seattle, WA 98101

Phone: 206-553-2143

Fax: 206-553-4743

Mcclintock.katie@epa.gov