SAFETY DATA SHEET

HUNTER CHEMICAL LLC

Prepared to U.S. OSHA, CMA, ANSI, Canadian WHMIS Standards, Australian WorkSafe, Japanese Industrial Standard JIS Z 7250:2000, and European Directives

1. PRODUCT IDENTIFICATION

TRADE NAME (AS LABELED):	Chromium (III) Oxide , Green
SYNONYMS:	Chromium (III) Oxide; Chromic Oxide; Chrome Oxide Green
CAS#:	1308-38-9
PRODUCT USE:	Various uses
CHEMICAL SHIPPING NAME/CLASS:	Chromium (III) Oxide – **Non-Regulated**
U.N. NUMBER:	NA
MANUFACTURER'S NAME:	Various Manufacturers
DISTRIBUTOR'S NAME:	**Hunter Chemical LLC**
ADDRESS:	220 Commerce Drive, Suite 405, Fort Washington, PA 19034
EMERGENCY PHONE:	(800) 424-9300 (CHEMTREC)
BUSINESS PHONE:	(215) 461-1900
DATE OF PREPARATION:	November 18, 2010
DATE OF REVISION:	October 23, 2013
DATE OF REVIEW:	October 23, 2013

2. HAZARD IDENTIFICATION

EMERGENCY OVERVIEW: Warning!

Product Description: This product is a Light to Dark Green Crystalline solid with no odor.
Health Hazards: Harmful if swallowed or inhaled. Causes irritation to skin, eyes and respiratory tract.
Flammability Hazards: Non-Flammable product.
Reactivity Hazards: This product is not reactive.
Environmental Hazards: Release of the product is not expected to cause adverse effects to the aquatic environment.
Emergency Recommendations: Emergency responders must have personal protective equipment and fire protection appropriate for the situation to which they are responding.

EU LABELING AND CLASSIFICATION: This product meets the definition of a hazardous substance or preparation according to EU Regulations (EC) No 1272/2008.
EC# 215-160-9 is not classified in the Annex I of Directive 67/548/EEC

COMPONENT(S) DETERMINING HAZARD:
Chromium (III) Oxide

GHS CLASSIFICATIONS:
Skin Sensitization Category 1
Skin Irritation Category 3
Eye Irritation Category 2B

SIGNAL WORD : Warning

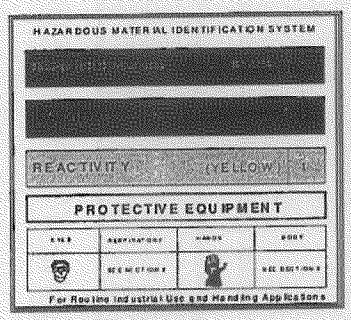

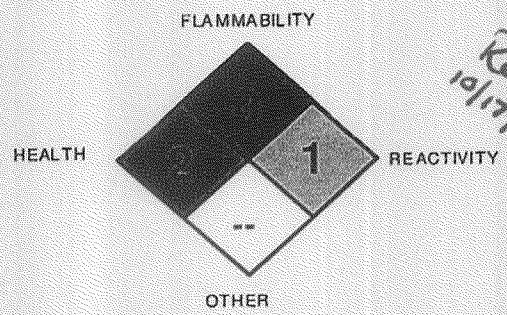

Rec'd 10/17/14

HAZARD STATEMENT:

H316	May cause skin irritation
H317	May cause an allergic skin reaction
H320	May cause eye irritation

Scale: **0** = Minimal **1** = Slight **2** = Moderate **3** = Serious **4** = Severe * = Chronic hazard

PREVENTION STATEMENT :

P202	Do not handle until all safety precautions have been read and understood
P261	Avoid breathing dust/fume/gas/mist/vapor/spray
P272	Contaminated work clothing should not be allowed out of the workplace
P280	Wear protective gloves/protective clothing/eye protection/face protection
P281	Use personal protective equipment as required

DEKRA ISO 9001:2008 Certified

ED_000719_00031741-00001

RESPONSE STATEMENT:

P321	Specific treatment is advised – see first aid instructions
P363	Wash contaminated clothing before reuse
P302 +P352	IF ON SKIN: Wash with plenty of soap and water
P308 + P313	IF exposed or concerned: Get medical advice/attention
P333 + P313	IF skin irritation or rash occurs: Get medical advice/attention

HEALTH EFFECTS OR RISKS FROM EXPOSURE:
ACUTE: Hazardous in case of skin contact (irritant), of eye contact (irritant), of ingestion, of inhalation. Inflammation of the eye is characterized by redness, watering, and itching.
CHRONIC: Prolonged or repeated skin contact may cause sensitization dermatitis and possible destruction and/or ulceration. Repeated inhalation may cause chronic bronchitis. A review of studies conducted over 100 years showed no conclusive evidence for a cancer hazard among workers exposed to aerosols formed by chromium metal or Chromium (III) compounds. The International Agency for Research on Cancer (IARC) has concluded that there is inadequate evidence in humans or experimental animals for the carcinogenicity of Chromium (III) compounds. The overall evaluation concluded that Chromium (III) compounds are not classifiable as to their carcinogenicity to humans.

3. COMPOSITION AND INFORMATION ON INGREDIENTS

Hazardous Ingredients:	WT%	CAS#	EINECS #	Hazard Classification	Risk Phrases
Chromium (III) Oxide	90 - 100%	1308-38-9	215-160-9	[Xi] Irritant	R36/38; R40
Balance of other ingredients is less than 1% in concentration (or 0.1% for carcinogens, reproductive toxins, or respiratory sensitizers).					None

NOTE: ALL WHMIS required information is included in appropriate sections based on the ANSI Z400.1-2010 format. This product has been classified in accordance with the hazard criteria of the CPR and the SDS contains all the information required by the CPR, EU Directives and the Japanese Industrial Standard *JIS Z 7250: 2000*.

4. FIRST-AID MEASURES

SKIN EXPOSURE: If this product contaminates the skin, begin decontamination with running water. Minimum flushing is for 5 minutes. Remove exposed or contaminated clothing, taking care not to contaminate eyes. The contaminated individual should seek medical attention if any adverse effect occurs.
EYE EXPOSURE: If this product enters the eyes, open contaminated individual's eyes while under gently running water. Use sufficient force to open eyelids. Remove contact lenses if worn. Have contaminated individual "roll" eyes. Minimum flushing is for 15 minutes. Contaminated individual must seek immediate medical attention.
INHALATION: If dusts generated by this product are inhaled, remove contaminated individual to fresh air. If necessary, use artificial respiration to support vital functions. Seek medical attention if breathing distress continues.
INGESTION: Routine use of this product is not expected to cause any situation which could lead to ingestion. If this product is swallowed, CALL PHYSICIAN OR POISON CONTROL CENTER FOR MOST CURRENT INFORMATION.
If professional advice is not available, do not induce vomiting. Never induce vomiting or give diluents (milk or water) to someone who is unconscious, having convulsions, or unable to swallow.
MEDICAL CONDITIONS AGGRAVATED BY EXPOSURE: Individuals with pre-existing skin conditions may be aggravated by exposure to this material
RECOMMENDATIONS TO PHYSICIANS: Treat symptoms and eliminate overexposure.

5. FIRE-FIGHTING MEASURES

FLASH POINT: Non-Flammable
AUTOIGNITION TEMPERATURE: Not Applicable
FLAMMABLE LIMITS (in air by volume, %): Lower NA Upper NA
FIRE EXTINGUISHING MATERIALS: Use fire extinguishing methods below:

Water Spray: Yes	Carbon Dioxide: Yes
Foam: Yes	Dry Chemical: Yes
Halon: Yes	Other: Any "C" Class

UNUSUAL FIRE AND EXPLOSION HAZARDS: Not considered a fire or explosion hazard.

Explosion Sensitivity to Mechanical Impact: No

Explosion Sensitivity to Static Discharge: No

SPECIAL FIRE-FIGHTING PROCEDURES: Incipient fire responders should wear eye protection. Structural firefighters must wear Self-Contained Breathing Apparatus and full protective equipment. Isolate materials not yet involved in the fire and protect personnel. Move containers from fire area if this can be done without risk; otherwise, cool with carefully applied water spray. If possible, prevent runoff water from entering storm drains, bodies of water, or other environmentally sensitive areas.

6. ACCIDENTAL RELEASE MEASURES

SPILL AND LEAK RESPONSE: Proper protective equipment should be used. Stop the flow of material, if this can be done safety. Contain discharged material. For spills of solid material, sweep-up or vacuum spilled solid, minimizing the generation of dust. Place in a proper container for reclamation or disposal. Dispose of in accordance with U.S. Federal, State, and local hazardous waste disposal regulations and those of Canada and its Provinces, those of Australia, Japan and EU Member States (see Section 13, Disposal Considerations).

7. HANDLING and STORAGE

WORK PRACTICES AND HYGIENE PRACTICES: As with all chemicals, avoid getting this product ON YOU or IN YOU. Wash thoroughly after handling this product. Do not eat, drink, smoke, or apply cosmetics while handling this product. Avoid breathing dusts generated by this product. Use in a well-ventilated location. Remove contaminated clothing immediately.

STORAGE AND HANDLING PRACTICES: Containers of this product must be properly labeled. Empty containers should be handled with care. Store containers in a cool, dry location. Keep container tightly closed when not in use.

8. EXPOSURE CONTROLS - PERSONAL PROTECTION

Chemical Name	CAS#	ACGIH TLV	OSHA TWA
Chromium (III) Oxide	1308-38-9	0.5 mg/m³ (As Cr Compound)	0.5 mg/m³ (As Cr Compound)

VENTILATION AND ENGINEERING CONTROLS: Use with adequate ventilation to ensure exposure levels are maintained below the limits provided below. Use a chemical fume hood or local exhaust ventilation, and process enclosure if necessary, to control airborne dust. Ensure eyewash/safety shower stations are available near areas where this product is used.

The following information on appropriate Personal Protective Equipment is provided to assist employers in complying with OSHA regulations found in 29 CFR Subpart I (beginning at 1910.132) or equivalent standard of Canada, or standards of EU member states (including EN 149 for respiratory PPE, and EN 166 for face/eye protection), and those of Japan. Please reference applicable regulations and standards for relevant details.

RESPIRATORY PROTECTION: Maintain airborne contaminant concentrations below guidelines listed above, if applicable. If necessary, use only respiratory protection authorized in the U.S. Federal OSHA Respiratory Protection Standard (29 CFR 1910.134), equivalent U.S. State standards, Canadian CSA Standard Z94.4-93, the European Standard EN149, or EU member states.

EYE PROTECTION: Safety glasses or goggles are recommended. If necessary, refer to U.S. OSHA 29 CFR 1910.133, Canadian Standards, and the European Standard EN166, Australian Standards, or relevant Japanese Standards.

HAND PROTECTION: Use chemically-resistant gloves when handling this product. If necessary, refer to U.S. OSHA 29 CFR 1910.138, the European Standard DIN EN 374, the appropriate Standards of Canada, Australian Standards, or relevant Japanese Standards.

BODY PROTECTION: Use body protection appropriate for task (e.g. lab coat, overalls). If necessary, refer to appropriate Standards of Canada, or appropriate Standards of the EU, Australian Standards, or relevant Japanese Standards. If a hazard of injury to the feet exists due to falling objects, rolling objects, where objects may pierce the soles of the feet or where employee's feet may be exposed to electrical hazards, use foot protection, as described in U.S. OSHA 29 CFR 1910.136.

9. PHYSICAL and CHEMICAL PROPERTIES

APPEARANCE (Physical State) and COLOR: Light to dark green crystalline solid with no odor

ODOR: No odor

ODOR THRESHOLD: Not Applicable
pH: Not Available
MELTING/FREEZING POINT: 2435°C (4415°F)
BOILING POINT: Not Available
FLASH POINT: Not Applicable
EVAPORATION RATE (n-BuAc=1): Not Applicable
FLAMMABILITY (SOILD, GAS): Not Available
UPPER/LOWER FLAMMABILITY OR EXLOSION LIMITS: Not Available
VAPOR PRESSURE (mm Hg @ 20°C (68°F): Not Applicable
VAPOR DENSITY: Not Applicable
RELATIVE DENSITY: Not Available
SPECIFIC GRAVITY: 5.10
SOLUBILITY IN WATER: Negligible
PARTITION COEFFICENT (n-octanol/water): Not Available
AUTO-IGNITION TEMPERATURE: Not Applicable
DECOMPOSITION TEMPERATURE: Not Available
VISCOSITY: Not Applicable

10. STABILITY and REACTIVITY

STABILITY: Stable under conditions of normal storage and use.
HAZARDOUS DECOMPOSITION PRODUCTS: No information found
MATERIALS WITH WHICH SUBSTANCE IS INCOMPATIBLE: Lithium, glycerol
POSSIBILITY OF HAZARDOUS REACTIONS: Will not occur.
CONDITIONS TO AVOID: Incompatible materials, dust generation.

11. TOXICOLOGICAL INFORMATION

TOXICITY DATA:
Chromium (III) Oxide CAS# 1308-38-9
No Data
SUSPECTED CANCER AGENT: Ingredients within this product are not found on the following lists: FEDERAL OSHA Z LIST, NTP, IARC, or CAL/OSHA and therefore are not considered to be, or suspected to be, cancer-causing agents by these agencies.
CARCINOGENIC EFFECTS: A4 (Not classifiable for human) by ACGIH, 3 (Not classifiable for human.) by IARC.
IRRITANCY OF PRODUCT: This product can be irritating to the skin, eyes, and respiratory system with prolonged contact.
SENSITIZATION TO THE PRODUCT: This product may cause allergic skin reactions.
REPRODUCTIVE TOXICITY INFORMATION: No reports concerning the effects of this product and its components on the human reproductive system.

12. ECOLOGICAL INFORMATION

ALL WORK PRACTICES MUST BE AIMED AT ELIMINATING ENVIRONMENTAL CONTAMINATION.
ENVIRONMENTAL STABILITY: When released into the soil, this material is not expected to biodegrade. This material is not expected to significantly bioaccumulate. No specific data available on this product.
CHEMICAL EFFECT ON PLANTS, ANIMALS AND AQUATIC LIFE: This product is not expected to be harmful to aquatic life in very low concentrations.

13. DISPOSAL CONSIDERATIONS

PREPARING WASTES FOR DISPOSAL: Waste disposal must be in accordance with appropriate U.S. Federal, State, and local regulations, those of Canada, Australia, EU Member States and Japan.

14. TRANSPORTATION INFORMATION

US DOT, IATA, IMO, ADR:

U.S. DEPARTMENT OF TRANSPORTATION (DOT) SHIPPING REGULATIONS: This product is not classified (per 49 CFR 172.101) by the U.S. Department of Transportation.

PROPER SHIPPING NAME:	Chromium (III) Oxide
HAZARD CLASS NUMBER and DESCRIPTION:	NON-REGULATED MATERIAL
UN IDENTIFICATION NUMBER:	NA
PACKING GROUP:	NA
DOT LABEL(S) REQUIRED:	N/A
NORTH AMERICAN EMERGENCY RESPONSE GUIDEBOOK NUMBER:	NA
RQ QUANTITY:	None

MARINE POLLUTANT: The components of this product are not designated by the Department of Transportation to be Marine Pollutants (49 CFR 172.101, Appendix B).

INTERNATIONAL AIR TRANSPORT ASSOCIATION SHIPPING INFORMATION (IATA): This product is not considered as dangerous goods.

INTERNATIONAL MARITIME ORGANIZATION SHIPPING INFORMATION (IMO): This product is not considered as dangerous goods.

EUROPEAN AGREEMENT CONCERNING THE INTERNATIONAL CARRIAGE OF DANGEROUS GOODS BY ROAD (ADR): This product is not considered by the United Nations Economic Commission for Europe to be dangerous goods.

15. REGULATORY INFORMATION

UNITED STATES REGULATIONS:

U.S. SARA REPORTING REQUIREMENTS: The components of this product are Not subject to the reporting requirements of Sections 302, 304, and 313 of Title III of the Superfund Amendments and Reauthorization Act.

U.S. SARA THRESHOLD PLANNING QUANTITY: There are no specific Threshold Planning Quantities for the components of this product. The default Federal SDS submission and inventory requirement filing threshold of 10,000 lbs (4,540 kg) therefore applies, per 40 CFR 370.20.

U.S. CERCLA REPORTABLE QUANTITY (RQ): None

U.S. TSCA INVENTORY STATUS: The components of this product are listed on the TSCA Inventory or are exempted form listing.

OTHER U.S. FEDERAL REGULATIONS: None

CALIFORNIA SAFE DRINKING WATER AND TOXIC ENFORCEMENT ACT (PROPOSITION 65): Ingredients within this product are not on the Proposition 65 Lists. .

CANADIAN REGULATIONS:

CANADIAN DSL/NDSL INVENTORY STATUS: The components of this product are on the DSL Inventory, or are exempted from listing.

OTHER CANADIAN REGULATIONS: Not applicable.

CANADIAN ENVIRONMENTAL PROTECTION ACT (CEPA) PRIORITIES SUBSTANCES LISTS:
This product has been classified in accordance with the hazard criteria of the Controlled Products Regulations and the SDS contains all of the information required by those regulations.

CANADIAN WHMIS CLASSIFICATION and SYMBOLS: Not Controlled

EUROPEAN ECONOMIC COMMUNITY INFORMATION:

EU LABELING AND CLASSIFICATION: This product meets the definition of the following hazard class as defined by the European Economic Community Guidelines.

EU CLASSIFICATION: [Xi] Irritant
EU RISK PHRASES: R36/38: Irritating to eyes and skin; R40: Possible risks of irreversible effects
EU SAFETY PHRASES: S22: Do not breathe dust; S37/39: Wear suitable gloves and eye/face protection

AUSTRALIAN INFORMATION FOR PRODUCT: The components of this product are listed on the International Chemical Inventory list.

JAPANESE INFORMATION FOR PRODUCT:

JAPANESE MINISTER OF INTERNATIONAL TRADE AND INDUSTRY (MITI) STATUS: The components of this product are not listed as Class I Specified Chemical Substances, Class II Specified Chemical Substances, or Designated Chemical Substances by the Japanese MITI.

JAPANESE ENCS INVENTORY: The components of this product are on the ENCS Inventory as indicated in the section on International Chemical Inventories, below.

POISONOUS AND DELETERIOUS SUBSTANCES CONTROL LAW: No component of this product is a listed Specified Poisonous Substance under the Poisonous and Deleterious Substances Control Law.

INTERNATIONAL CHEMICAL INVENTORIES:

Listing of the components on individual country Chemical Inventories is as follows:

Asia-Pac: Listed
Australian Inventory of Chemical Substances (AICS): Listed
Korean Existing Chemicals List (ECL): Listed
Japanese Existing National Inventory of Chemical Substances (ENCS): Listed
Philippines Inventory if Chemicals and Chemical Substances (PICCS): Listed
Swiss Giftliste List of Toxic Substances: Listed
U.S. TSCA: Listed

16. OTHER INFORMATION

PREPARED BY: Paul Eigbrett – (**SDS Authoring PLUS**)
DATE OF PRINTING: October 23, 2013

The information contained herein is believed to be accurate but is not warranted to be so. Data and calculations are based on information furnished by the manufacturer of the product and manufacturers of the components of the product. Users are advised to confirm in advance of the need that information is current, applicable and suited to the circumstances of use. Hunter Chemical LLC assumes no responsibility for injury to vendee or third party person proximately caused by the material if reasonable safety procedures are no adhered to as stipulated in the data sheet. Furthermore, Hunter Chemical LLC assumes no responsibility for injury caused by abnormal use of this material even if reasonable safety procedures are followed.

END OF SDS SHEET

To: McClintock, Katie[McClintock.Katie@epa.gov]
From: GRUNOW Greg
Sent: Thur 2/11/2016 6:44:33 PM
Subject: FW: Request for MSDS Copies
Monofrax CS-3 Info.pdf
VC40 Info.pdf

Hi Katie,

Likewise, it was great to finally meet you in person! Here are the specifications for the refractory material as you requested…

Regards,

Greg Grunow

Natural Resource Specialist

ODEQ Northwest Region

503-229-5690

grunow.greg@deq.state.or.us

From: Eric Durrin [mailto:ericdurrin@bullseyeglass.com]
Sent: Tuesday, February 09, 2016 5:55 PM
To: GRUNOW Greg
Cc: Max Miller
Subject: RE: Request for MSDS Copies

Hello,

I checked with our maintenance department. We currently use two materials for our tank liners: Monofrax CS-3, and VC40-Chamotte. Chromium is not shown on the material specification documents for these building materials.

Regards,

Eric Durrin | Bullseye Glass Co. | 503-232-8887x103

From: GRUNOW Greg [mailto:GRUNOW.Greg@deq.state.or.us]
Sent: Tuesday, February 9, 2016 12:50 PM
To: Eric Durrin
Subject: RE: Request for MSDS Copies

Hi Eric,

Do your refractory linings contain chromium? If they do, I would like to get a MSDS for the refractory as well. I just learned that this refractory question came up at a neighborhood meeting that occurred last night in which DEQ was not represented. If your refractory does contain chromium, please let me know if you will be unable to get me the associated MSDS by COB today.

Once again, sorry for the last minute request.

Regards,

Greg Grunow

Natural Resource Specialist

ODEQ Northwest Region

503-229-5690

grunow.greg@deq.state.or.us

Product Information

Monofrax® CS-3
Alumina-Zirconia-Silica (AZS)
Fused Cast Refractory

Product Description

Monofrax® CS-3 is the most versatile and widely used of the three Monofrax AZS compositions. It has the lowest ZrO_2 concentration among AZS refractories, yet it offers excellent corrosion resistance to soda lime glass melts.

Manufacturing Description

Monofrax CS-3 is melted and oxidized using a patented process in an electric arc furnace and poured into sand molds. This composition is available in many shapes and hundreds of different sizes, produced with and without casting voids. The annealing process is optimized to achieve superior surface quality and overall physical and chemical properties. Advanced, state-of-the-art grinding equipment is used to provide excellent joint quality.

Typical Chemistry

ZrO_2	34%
Al_2O_3	48%
SiO_2	15%
Na_2O	<2%
Other	<1%

Typical Applications

- Glass furnace
  - Sidewalls and pavers
  - Superstructure
  - Channels
  - Throat
- Ceramic frit furnace blocks
- Sodium silicate furnace linings
- Abrasion and wear resistant blocks.

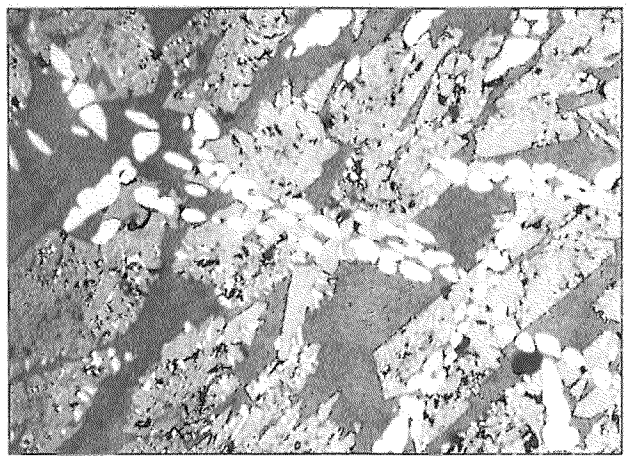

Micrograph Description

This photomicrograph shows the alumina, zirconia and silica phases present in CS-3. The light gray alumina forms flecked with white zirconia crystallites comprise the composite crystal phase. White chains represent the zirconia dendrites distributed through this material. These crystalline phases, solidified from the melt, are fixed in a silica glassy matrix (dark gray areas).

RHI

RHI Monofrax LTD
1870 New York Avenue
Falconer, New York 14733-1797
Telephone: 716-483-7200
Fax: 716-483-7273
www.rhi-ag.com
www.monofrax.com

fact file

Parkinson - Spencer
Refractories Limited
Holmfield, Halifax,
West Yorkshire, UK.
HX3 6SX

(44) (0)1422 254472
(44) (0)1422 254473
admin@parkinson-spencer.co.uk
www.parkinson-spencer.co.uk

VC40 - CHAMOTTE / FLUX

A super-duty vacuum-cast fireclay block for glass furnace bottoms and sidewall back-up. Also suitable for glass-contact use in selected applications.

Chemical Analysis (wt %)*

SiO_2	54.0
Al_2O_3	41.0
Fe_2O_3	1.75
TiO_2	1.10
CaO	0.25
MgO	0.21
Na_2O	0.30
K_2O	0.10

Physical Properties*

Bulk Density	2199 kg m^{-3}
Cold Compressive Strength	66.4 N mm^{-2}
Apparent Porosity	18%
Refractoriness	1717°C. (Cone 33)
Reversible Thermal Expansion 20 - 1000°C	0.5%

*All values are average and subject to change without notice.

ED_000719_00031744-00001

To: McClintock, Katie[McClintock.Katie@epa.gov]
From: Brian Renninger
Sent: Mon 2/8/2016 4:52:30 PM
Subject: FW: Glass Constituent Questions

You might be interested in this communication I had from Spectrum Glass last week. See below.

Brian Renninger, P.E.

Engineer

Puget Sound Clean Air Agency

206.689.4077

brianr@pscleanair.org

1904 Third Avenue, Suite 105

Seattle, WA 98101

"Working together for clean air"

www.pscleanair.org

From: Brandon [mailto:brandonbyhre@spectrumglass.com]
Sent: Thursday, February 04, 2016 2:18 PM
To: Brian Renninger
Cc: 'Monica Pillay'
Subject: RE: Glass Constituent Questions

Hello Brian,

I misspoke in my email earlier today. I said we have never used Arsenic here, which is incorrect. We used to make a clear glass for Bullseye. That clear glass was made primarily with our raw materials with the addition of a "proprietary" bag of ingredients that Bullseye provided us. We learned this "proprietary" material contained Arsenic. Once we learned this we ceased all production of the Bullseye clear at our factory and have not produced any glass for them since then. The last date of production of their clear glass was on June 8th, 2002. This all occurred prior to my employment at Spectrum which is why I was not aware of it. I became aware of the Bullseye situation later this morning and wanted to correct my statement to you regarding the use of Arsenic at Spectrum.

We do not plan to use Arsenic at Spectrum Glass in the future and have not done so in the last 14 years.

Let me know if you have any questions.

Thank you,

Brandon Byhre
Vice President of Operations | Spectrum Glass Co.
PO Box 646 | Woodinville, WA 98072 | 425.483.6699 x4065
SpectrumGlass.com | System96.com

From: Brandon [mailto:brandonbyhre@spectrumglass.com]
Sent: Thursday, February 04, 2016 10:37 AM
To: 'Brian Renninger' <BrianR@pscleanair.org>

Cc: 'Monica Pillay' <monica@spectrumglass.com>
Subject: RE: Glass Constituent Questions

Hello Bryan,

We do not use any Arsenic here at Spectrum. We never have and we do not plan to. I hope that helps.

Thanks,

Brandon

From: Brian Renninger [mailto:BrianR@pscleanair.org]
Sent: Wednesday, February 03, 2016 11:06 AM
To: brandonbyhre@spectrumglass.com
Cc: Monica Pillay <monica@spectrumglass.com>
Subject: Glass Constituent Questions

Mr. Byhre and Ms. Pillay,

I recently became aware of a Federal Regulation for glass manufacturing plants that use arsenic as a feedstock. This isn't a new rule but, I wasn't aware of it and we don't have it listed as applying to your facility.

The rule would apply to "…each glass melting furnace that uses commercial arsenic as a raw material. This subpart does not apply to pot furnaces."

So, do you ever use arsenic as a feedstock in any of your furnaces that aren't pot furnaces? If so, could identify which furnaces you use for this?

The whole rule is available for your review here:

http://www.ecfr.gov/cgi-bin/retrieveECFR?gp=&SID=8e927707b1a4d445340244e4d61cdd19&mc=true&n=sp40.9.61.n&r=SUBPART&

Sincerely,

Brian Renninger, P.E.

Engineer

Puget Sound Clean Air Agency

206.689.4077

brianr@pscleanair.org

1904 Third Avenue, Suite 105

Seattle, WA 98101

"Working together for clean air"

www.pscleanair.org

To: McClintock, Katie[McClintock.Katie@epa.gov]
From: Brian Renninger
Sent: Mon 2/8/2016 4:50:43 PM
Subject: RE: Spectrum Glass

Yes, I would be happy to talk to you about spectrum.

I apologize that I was out Friday but, I am back in the office if you would like to talk.

Sincerely,

Brian Renninger, P.E.

Engineer

Puget Sound Clean Air Agency

206.689.4077

brianr@pscleanair.org

1904 Third Avenue, Suite 105

Seattle, WA 98101

"Working together for clean air"

www.pscleanair.org

From: McClintock, Katie [mailto:McClintock.Katie@epa.gov]
Sent: Friday, February 05, 2016 10:51 AM
To: Brian Renninger
Subject: Spectrum Glass

Brian –

Steve suggested I talk to you about this facility. It is very hot issue for us related to another facility. Do you have a few minutes today?

Katie McClintock

Air Enforcement Officer

EPA Region 10

1200 Sixth Avenue, Suite 900, OCE-101

Seattle, WA 98101

Phone: 206-553-2143

Fax: 206-553-4743

Mcclintock.katie@epa.gov

To: McClintock, Katie[McClintock.Katie@epa.gov]
Cc: Gable, Debra[Gable.Debra@epa.gov]
From: ARMITAGE Sarah
Sent: Sat 2/6/2016 6:29:28 PM
Subject: RE: chromium

Hi Katie,
We are working on a monitoring plan right now and need to evaluate the need and feasibility of chrome 6 analysis. Can you send me links or other information about the data you were citing last night on refractory breakdown/chrome 6 emissions? There have also been concerns about silica and we would like to learn more about how to monitor that.

Debra, I copied you because I hear you are a monitoring expert and know about silica.

Thanks
Sarah 503-229-5186

From: McClintock, Katie [McClintock.Katie@epa.gov]
Sent: Friday, February 05, 2016 8:59 AM
To: ARMITAGE Sarah
Subject: chromium

Sarah –

I have some info that might be helpful to you regarding chromium from bullseye. I know you are busy but give a call when you can. I left you a voicemail too, but if you are like me I read email before I have time to check voicemail.

Katie McClintock
Air Enforcement Officer
EPA Region 10
1200 Sixth Avenue, Suite 900, OCE-101
Seattle, WA 98101
Phone: 206-553-2143
Fax: 206-553-4743
Mcclintock.katie@epa.gov

To: McClintock, Katie[McClintock.Katie@epa.gov]
Cc: Brian Renninger[BrianR@pscleanair.org]
From: Steve Van Slyke
Sent: Fri 2/5/2016 10:23:25 PM
Subject: Spectrum Glass
Spectrum Glass 14107.pdf

Katie,

Here is the Facility Evaluation form for Spectrum Glass, which serves as the inspection template for an onsite evaluation. My recollection is that we determined that the site was not subject to the NESHAP (63, Subpart 6S), but I'm not sure where that decision was documented and the basis for that determination. Brian can help you with that. I know the question was being discussed in association with a proposed furnace modification NOC application, but the permit application file was closed as the source did not decide to proceed with that project. Brian will have a better memory and details of that topic.

Hope this helps.

Steve

Steve Van Slyke, P.E.
Interim Director of Compliance
Puget Sound Clean Air Agency
1904 3rd Ave., Suite 105
Seattle, WA 98101-3317

(206) 689-4052
(206) 343-7522 (fax)

SteveV@pscleanair.org

Activity Record

Employee	Initials	Date Completed
1.		
2.		
3.		
4.		

Puget Sound Clean Air Agency
1904 3rd Ave, Ste 105
Seattle, WA 98101-3317

Evaluation Report

Reg #: 14107
EPA?: Yes
Status: Active

Personal Protective Equipment Checklist

Determined by Inspector based on Compliance Manual Policy 101

Worn	Safety Equipment	Req/Op
☐	None	
☐	Hard Hat	
☐	Goggles	
☐	Safety Glasses	R
☐	Hearing Protection	R
☐	Respirator	
☐	Safety Shoes	R
☐	Rubber Boots	
☐	Leather Gloves	
☐	Chemical Gloves	
☐	Coveralls	
☐	Tyvek	
☐	Safety Vest	
☐	Other	

Inspector **JSS** Engineer **BTR**

Last Onsite Compliance **10/16/2013**

40 CFR Part 60 CC

Facility: Spectrum Glass Co Inc

Physical Address: 24105 Snohomish-Woodinville Rd
Woodinville 98072

Invoice Address:
PO Box 646
Woodinville WA 98072-0646

	Contacted	Phone	Fax	E-mail
☐	Kyle Barker, President	(425) 483-6699		
☐	Glenn Yablecki, Plant Engineer	(425) 483-6699		
☐	Monica Pillay, Glass Engineer	(425) 483-6699 x4040		
☐	Brandon Byhre, Technology Engineer	(425) 483-6699 4065		
☐				

North American Industrial Classification System (NAICS): 327211 - Flat Glass Manufacturing

Evaluation Date: Clean Air Reps:

Evaluation Type: ☐ Onsite Compliance ☐ Onsite Observation ☐ Follow-up

Evaluation Summary:

Updates: ☐ AOD ☐ Equipment ☐ NOC ☐ Operating Status ☐ Owner/Name ☐ CFR Change ☐ Other

Attachments:

NOV/WW # Issued:

Other Action:

Evaluation Prepared by: Date:

ED_000719_00031749-00001

Onsite Compliance Evaluations (Last 3)

Eval Date	Inspector	Inspector	Notes	NOV/WW
10/16/2013	JSS		Visible emission from baghouse exhaust observed. Spectrum Glass advised in-person. Corrective action taken immediately.	
07/11/2013	JSS	WT	W W 2-009012 Compliance Evaluation.Acceptable pressure drop range not posted on or near Gauges for silos 12 & 13 as required: OA 6689 cond 4.	2-009012
01/30/2012	JSS		CSR - no deficiencies. Routine evaluation.	

Onsite Observation Evaluations (Last 3) - None

Offsite Report Evaluations (Last 18 Months) - None

Onsite Complaint Evaluations (Last 3)

Eval Date	Inspector	Inspector	Case#	Case Type	NOV/WW
03/08/2006	JSS		2006500096	Dust/Fallout	
09/22/1994	EMG		94500993	Dust/Fallout	

Violation History (Last 2 Years) - None

Open AOD Conditions - None

Notices of Construction / Notifications Evaluation Pending - None

Notices of Construction / Notifications

Inactive? BTR initials	NOC / Notice #		Approved	Evaluated
☐	**1891**	**Glass Manufacturing**	01/03/1979	07/19/2005
		Installation Address: Woodinville WA, WA		
☐	**2093**	**Dust Collection System**	05/15/1980	07/19/2005
☐	**2871**	**Furnace #3**	02/20/1987	07/19/2005
☐	**2981**	**Daytank E Melting Furnace**	10/30/1987	07/19/2005
☐	**3101**	**Irridized Glass Prod & Control**	07/19/1988	01/31/1992

Conditions

1. Spectrum Glass shall not emit more than 0.8 lb/hr of methylene chloride from this process.

2. Spectrum Glass shall submit a copy of any emission tests relating to this process.

Description

One Irridized Glass Process with two spray hoods, one Eclipse Incini one #136IC, one SFC Model 15 Dry Scrubber and ond Donaldson-Day Model 60HPT Hybred Pulsejet 6000 cfm (155F)

☐	**3228**	**Glass Furnace #2**	05/16/1989	10/17/1989

Description

One Spectrum Glass Co No. 2 Single Phase Glass Furnace, 5TPD Capacity, 90i x 78i x 24i, gas (6 MMBH) and electric heated

☐	**5626**	**3 Baghouses**	11/30/1994	07/19/2005

Conditions

4. Spectrum Glass Co Inc. shall not allow the emissions from the Torit baghouses to exceed: (a) 0.01 gr/dscf measured by PSACA approved particulate source test methods, and (b) 10% opacity for a period or periods aggregating more than 3 minutes in any one hour.

Description

Three Torit TD 486 Bin Vents at 1,350 cfm each.

Notices of Construction / Notifications

Inactive? BTR initials	NOC / Notice #		Approved	Evaluated
☐	**6497**	**5 Furnaces & 2 Baghouses**	09/06/1996	07/19/2005

Conditions

4. Gauges to measure the pressure drop across the baghouses for Furnace #4 and #5 will be installed and maintained. Within 90 days after beginning equipment operation, the acceptable ranges for the gauges will be clearly marked on or nearby the gauges.

5. There shall be no visible emissions from the baghouses.

6. PM10 emissions from all baghouse exhaust shall not exceed 0.010 gr/dscf.

7. When demonstrating compliance, PM10 emissions shall be determined by EPA Method 5 (as approved by the PSAPCA Board) or EPA Method 201A/202.

8. Spectrum Glass shall comply with requirements of 40 CFR 60, Subpart CC, and notify the U.S. Environmental Protection Agency of construction.

Description

Two 9 tons/day Furnaces (#4 and #5) fired by oxy/fuel and natural gas, each with a Mikro-Pulsaire 2 Baghouse rated at 20,000 cfm each, and two 3 tons/day Furnaces (Daytank #F and #G), one Forehearth rated at 20,000 cfm, and change Furnace #2 from natural gas firing to oxy/fuel and natural gas combined at a two-for-one molar ratio.

☐	**6689**	**2 Silo Bin Vents**	01/24/1997	12/16/1997

Conditions

4. Spectrum Glass shall install and maintain gauges to measure the pressure drop across the Torit TD486 baghouses. Within 90 days after beginning equipment operations, the acceptable ranges for the gauges shall be clearly marked on or nearby the gauges.

5. Once each week, Spectrum Glass shall log if the pressure drop was in the acceptable range.

6. If the pressure drop is not within the acceptable range, Spectrum Glass shall take correction action as specified in the facility's Operation and Maintenance Plan.

7. There shall be no visible emissions from the Torit TD486 baghouses.

Description

Two Torit TD486 Baghouses rated at 1,350 cfm each to control emissions from soda ash and silica sand silos.

☐	**8605**	**One Pneumatic Railcar Unloader with baghouse.**	12/11/2001	07/19/2005

Conditions

3. The Railcar Unloader shall have no visible emissions or fallout.

4. The Railcar Unloader shall be inspected at least once every other week for visible emissions, fallout, and pressure drop across the filters.

5. If the Railcar Unloader is observed to have visible emissions, fallout, or abnormal pressure drop, Spectrum Glass shall investigate the cause and either complete repairs or shut the equipment vented to the baghouse within 24 hours of the observation.

6. Spectrum Glass shall record all inspections and corrective actions and maintain these records for at least two years and make them available to Puget Sound Clean Air Agency personnel upon request.

Description

One Pneumatic Railcar Unloader Whirl-AirFlow 10 BF300 Transporter and Model WAF 180 dust collector at 800 cfm.

☐	**9599**	**baghouse**	04/13/2007	08/13/2007

Conditions

Notices of Construction / Notifications

Inactive? ***NOC / Notice #*** ***Approved*** ***Evaluated***
BTR initials

EMISSIONS LIMITS

3. Spectrum Glass Co. shall not allow visible emissions or fallout from the baghouse.

4. Spectrum Glass Co. shall not allow emissions from the baghouse exhaust to exceed 0.01 gr/dscf as measured by a compliance source test following the requirements of Regulation I, Section 3.07.

PASSIVE DUST COLLECTOR OPERATIONS

5. Spectrum Glass Co. shall install and maintain a pressure gauge to measure the pressure drop across the baghouse.

6. Spectrum Glass Co. shall, within 60 days after startup, determine the acceptable pressure drop range across the baghouse during normal operations, and record the maximum and minimum pressure drop readings in the facility's Operations and Maintenance Plan as required by Puget Sound Clean Air Regulation I, Section 5.05. The acceptable operating range shall be marked on or nearby the pressure drop gauge.

INSPECTIONS

7. The baghouse shall be inspected at least once per week when equipment vented to the unit is operating. Inspections shall include a check for visible emissions and fallout. Inspections shall include recording the presence or absence of visible emissions or fallout, and that the pressure drop across the baghouse is within the established range of Condition No. 6.

CORRECTIVE ACTIONS

8. If visible emissions or fallout are observed, Spectrum Glass Co. shall investigate the cause and either initiate repairs or shut down the equipment vented to the baghouse within 24 hours of the observation.

RECORDS

9. Records of all inspections and corrective actions shall be maintained for at least two years and made available to Puget Sound Clean Air Agency personnel upon request.

PERMIT CONTINUITY

10. This Order replaces and supersedes Order of Approval No. 4345 dated April 15, 1992.

Description

Replacement of baghouse of number two glass furnace. Original baghouse at end of life. Baghouse model is Serbaco Inc. TL480-8 WIP-1C, rated at 20,000 cfm with air to cloth ratio of 3.32.

Air Contaminant Generating Equipment, Associated Control Equipment

Inactive?

▯ (1) pulverizing (includes ball, bowl and roller mills)
Former Description: Crushing System
(2) Glass--Outside
Rated: 0 Year Installed: 1979 NC/NOT #:
▯ *CE (2) Water sprays (2)
Glass Crushers
Rated: 0 CFM Year Installed: 1979 NC/NOT #:

▯ (2) melt furnace (AOD, crucible, electric arc, electric induction, glass, pot, sweat)
Former Description: Furnace
Glass Melter #1 Electric - Nat Gas Start-Up
Rated: 18 Ton/Day Year Installed: 1986 NC/NOT #: 1891
Other Fuel

Air Contaminant Generating Equipment, Associated Control Equipment

Inactive?

- (3) melt furnace (AOD, crucible, electric arc, electric induction, glass, pot, sweat) (4)
  Former Description: Furnace
  Glass - Day Tanks Electric (A-D)
  Rated: 1 Ton/Day Year Installed: NC/NOT #:
  Natural Gas / Other Fuel
- (4) storage silo/bin
  Former Description: Storage Bin/Silo System
  (4) Glass Mix Silo - batch mixing
  Rated: 0 Year Installed: 1980 NC/NOT #: 2093
  - CE (1) Baghouse
    (Batch) Glass Mix Silo
    Rated: 0 CFM Year Installed: 1980 NC/NOT #: 2093
  - CE (8) Baghouse (3)
    Rated: 1350 CFM Year Installed: 1994 NC/NOT #: 5626
- * (5) mixer (includes dispersers, blenders)
  Former Description: Mixer
  Squirrel Cage
  Rated: 0 Year Installed: 1980 NC/NOT #: 2093
- (6) melt furnace (AOD, crucible, electric arc, electric induction, glass, pot, sweat)
  Former Description: Furnace
  #3 - Electric Glass
  Rated: 10 Ton/Day Year Installed: NC/NOT #: 2871
- (7) melt furnace (AOD, crucible, electric arc, electric induction, glass, pot, sweat)
  Former Description: Furnace
  2 Ton/Day Daytank 'E' Glass
  Rated: 2 Million BTU/Hr Year Installed: 1988 NC/NOT #: 2981
- (8) melt furnace (AOD, crucible, electric arc, electric induction, glass, pot, sweat)
  Former Description: Furnace
  #2 Spectrum Single Phase Glass Oxyfuel Fired 1966
  Rated: 7 Ton/Day Year Installed: 1989 NC/NOT #: 6497
  Other Fuel
  - CE (4) Baghouse
    Serbaco Inc. TL480-8 WIP-1C, air-to-cloth ratio of 3.32
    Rated: 20000 CFM Year Installed: 2007 NC/NOT #: 9599
- * (9) abrasive blasting/shot peening cabinet, booth or room
  Former Description: Sandblasting Booth
  For Prototypes
- * (10) melt furnace (AOD, crucible, electric arc, electric induction, glass, pot, sweat)
  Former Description: Furnace
  (test Furnace) [Furnace T = 150 lbs]
  Rated: 25 Kw Year Installed: 1990 NC/NOT #:
  Electric
- (11) surface coating, non-spray (dip, flow, roll or powder, includes curing oven)
  Former Description: Glaze & Enamel Exhaust Booth
  Irridized W/2 Spray Hoods
  Rated: 0 Year Installed: 1991 NC/NOT #: 3101
  - CE (3) Baghouse
    Donaldson-Day Mod 60hpt8 Hybred Pulsejet (155f)
    Rated: 6000 CFM Year Installed: 1991 NC/NOT #: 3101
- (12) melt furnace (AOD, crucible, electric arc, electric induction, glass, pot, sweat)
  Former Description: Furnace
  #4 Oxyfuel/Natural Gas
  Rated: 9 Ton/Day Year Installed: NC/NOT #: 6497
  Other Fuel / Natural Gas
  - CE (5) Baghouse
    Mikro-Pulsaire 2 For Furnaces #4
    Rated: 20000 CFM Year Installed: NC/NOT #: 6497

Air Contaminant Generating Equipment, Associated Control Equipment

Inactive?

- (14) melt furnace (AOD, crucible, electric arc, electric induction, glass, pot, sweat)
  Former Description: Furnace
  Daytank #F
  Rated: 3 Ton/Day Year Installed: NC/NOT #: 6497
- (15) melt furnace (AOD, crucible, electric arc, electric induction, glass, pot, sweat)
  Former Description: Furnace
  Forehearth
  Rated: 20000 CFM Year Installed: NC/NOT #: 6497
- * (16) storage tank
  Former Description: Tank - Storage
  Above ground storage tank - Diesel
  Rated: 1500 Gal Year Installed: NC/NOT #:
- * (17) IC engine (generator, pump, compressor)
  Former Description: Generator
  (no NOC per JMW)
  Rated: 750 Kva Year Installed: NC/NOT #:
- (18) conveyor/elevator (belt, screw, pneumatic, bucket)
  Former Description: Pneumatic System Unloading
  Whirl-AirFlow 10 BF300 Transporter
  Rated: 0 Year Installed: 2001 NC/NOT #: 8605
  - CE (7) Baghouse
    Model WAF 180
    Rated: 800 CFM Year Installed: 2001 NC/NOT #: 8605

* This item does not require a Notice of Construction.

Other Control Equipment

Inactive?

- (6) Baghouse (2)
  Torit Td486 Soda Ash And Silica S& Silos &NC 5626
  Rated: 1350 CFM Year Installed: 1997 NC/NOT #: 6689

* This item does not require a Notice of Construction.

Emission Summary - None for 2013 or 2014

Fee Categories for 2016 Invoice

Reg I, 5.03(a)(1) - Facilities subject to federal emission standards (Title 40 CFR)

Reg I, 5.03(a)(6) - Facilities with particulate control equipment (>= 2,000 cfm)

Reg I, 5.03(a)(6) - Facilities with particulate control equipment (unknown cfm)

Reg I, 5.07(c)(1) - 40 CFR 60 Subpart CC

No Outstanding Annual Invoice Fees for this Source

To: McClintock, Katie[McClintock.Katie@epa.gov]
From: Kaetzel, Rhonda
Sent: Tue 2/2/2016 6:51:52 PM
Subject: Re: Can you send address of glass facility?

Dude... Expert? We should talk.

Sent from my iPhone

On Feb 2, 2016, at 10:14 AM, McClintock, Katie <McClintock.Katie@epa.gov> wrote:

I'm looking into this. I don't see them in echo at all so checking with our data folks to see what I can find out. Glass is my forte, as I am the national glass expert, though I generally deal with larger sources and criteria pollutants. I did work a bit on the mact writing though.

From: Kaetzel, Rhonda
Sent: Tuesday, February 02, 2016 9:57 AM
To: McClintock, Katie <McClintock.Katie@epa.gov>
Subject: Fwd: Can you send address of glass facility?

Can you look up RCRA number for this facility... Might have another urgent air issue...

Sent from my iPhone

Begin forwarded message:

From: Hudson Todd <todd.hudson@state.or.us>
Date: February 2, 2016 at 9:55:19 AM PST
To: SIFUENTES Julie <julie.sifuentes@state.or.us>, "Kaetzel, Rhonda" <kaetzel.rhonda@epa.gov>
Subject: RE: Can you send address of glass facility?

Bullseye Glass
3722 SE 21st Ave
Portland, OR 97202

Todd Hudson
Public Health Toxicologist
Public Health Division
todd.hudson@state.or.us
971-673-0024

CONFIDENTIALITY NOTICE
This email may contain information that is privileged, confidential, or otherwise exempt from disclosure under applicable law. If you are not the addressee or it appears from the context or otherwise that you have received this email in error, please advise me immediately by reply email, keep the contents confidential, and immediately delete the message and any attachments from your system.

-----Original Message-----
From: Kaetzel, Rhonda [mailto:Kaetzel.Rhonda@epa.gov]
Sent: Tuesday, February 02, 2016 9:54 AM
To: Hudson Todd <TODD.HUDSON@dhsoha.state.or.us>; SIFUENTES Julie <Julie.SIFUENTES@dhsoha.state.or.us>
Subject: Can you send address of glass facility?

Todd - can you send the address for glass place. I'm going to find out its RCRA number or if it has one.

Sent from my iPhone

To: McClintock, Katie[McClintock.Katie@epa.gov]
From: Kaetzel, Rhonda
Sent: Tue 2/2/2016 5:57:05 PM
Subject: Fwd: Can you send address of glass facility?

Can you look up RCRA number for this facility... Might have another urgent air issue...

Sent from my iPhone

Begin forwarded message:

From: Hudson Todd <todd.hudson@state.or.us>
Date: February 2, 2016 at 9:55:19 AM PST
To: SIFUENTES Julie <julie.sifuentes@state.or.us>, "Kaetzel, Rhonda" <kaetzel.rhonda@epa.gov>
Subject: RE: Can you send address of glass facility?

Bullseye Glass
3722 SE 21st Ave
Portland, OR 97202

Todd Hudson
Public Health Toxicologist
Public Health Division
todd.hudson@state.or.us
971-673-0024

CONFIDENTIALITY NOTICE
This email may contain information that is privileged, confidential, or otherwise exempt from disclosure under applicable law. If you are not the addressee or it appears from the context or otherwise that you have received this email in error, please advise me immediately by reply email, keep the contents confidential, and immediately delete the message and any attachments from your system.

-----Original Message-----
From: Kaetzel, Rhonda [mailto:Kaetzel.Rhonda@epa.gov]
Sent: Tuesday, February 02, 2016 9:54 AM
To: Hudson Todd <TODD.HUDSON@dhsoha.state.or.us>; SIFUENTES Julie <Julie.SIFUENTES@dhsoha.state.or.us>
Subject: Can you send address of glass facility?

Todd - can you send the address for glass place. I'm going to find out its RCRA number or if it has one.

Sent from my iPhone

To: McClintock, Katie[McClintock.Katie@epa.gov]
From: Eric Lovell
Sent: Fri 2/19/2016 10:55:02 PM
Subject: Uroboros response to request for information
removed.txt
Weekly Melt Plans Oct 2015-Feb 2016.pdf
AZS Invoice for #19,21 & 4 2013-8.pdf
Utah Refractories- silica invoice 2013-3.pdf
DSF Invoices for #19, 21 & 4 2013-6.pdf
13-1655 1000# tank (lower) invoice.pdf
13-1767 Uroboros 1000# Tank (Upper) Invoice.pdf

Dear Ms. McClintock,

Attached are eight digital files containing much of what you have requested. The first is a written response to each of the questions, and the others contain supporting documents.

I believe this fulfills your request completely, except for the batch tickets and formulas/recipes. We are still working on collecting those documents, and expect to mail those to you in paper form early next week. I apologize if it appears we are being too slow at providing these documents. I can explain what is taking the time if you wish, but we are putting several hours per day into it, and are getting close to having a complete and accurate set for you.

If I have missed anything, if you need additional information, or if you need any explanations of the materials, please let me know.

Sincerely,

Eric L.

Eric Lovell
President

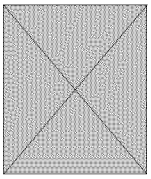

2139 N. Kerby Ave
Portland, OR 97227
503-284-4900 x 201 T
503-284-7584 F

Utah Refractories Corp.
Quality, One Brick at a Time

Freight Terms:	Quote No.
Ex works, Collect	Q-13039

Export
No

Date:
08 Mar 2013

Payment Terms:
Net 10 Days

Currency:
USD

Customer:

Mike Zic
Uroboros
mikez@uroboros.com
503 284 4900

Supplier:

Utah Refractories Corp.
2200 North 1100 West
Lehi, Utah 84043

801-768-3591 FX: 801-768-2684

Quotation

Item No.	Quantity Ordered	Size Or Shape	MFG Method	PC Equivalent	Est. PC Wt. Lbs.	Weight Ext.	Price Each	Net Sales Amount
		Silica Brick ASTM Type "A" - Gen-Sil						
1	200	9 x 4 1/2 x (3- 2 1/2) #2 Wedge	V	1.10	7.3	1,467	4.22	844.00
2	200	9 x 4 1/2 x (3- 2) #3 Wedge	V	1.00	6.7	1,333	3.83	766.00
3	150	60-9 Skew 3 Inch	VB	1.88	12.5	1,880	16.03	2,404.50
4	1	Domestic Pallet / Packaging Charge					50.00	50.00
							TOTAL:	**$4,064.50**

Note:

Please review and confirm the 4 1/2 size for the wedges and the skew block design and thickness.

Available for shipment to 12 to 14 weeks after receipt of order.

Firm availability provided at time of order placement.

If material is needed sooner, please let us know.

Quotation

Item No.	Quantity Ordered	Size Or Shape	MFG Method	PC Equivalent	Est. PC Wt. Lbs.	Weight Ext.	Price Each	Net Sales Amount
		Estimated Material Weight:	**4,680**					
		Estimated Pallets :	**2**					

Subject to the *Standard Utah Refractories Terms & Conditions.*

Pricing is for a complete bill of materials, individual pricing upon request.

All material manufactured at Lehi, UT, by Utah Refractories.

Quotation valid for 30 days.

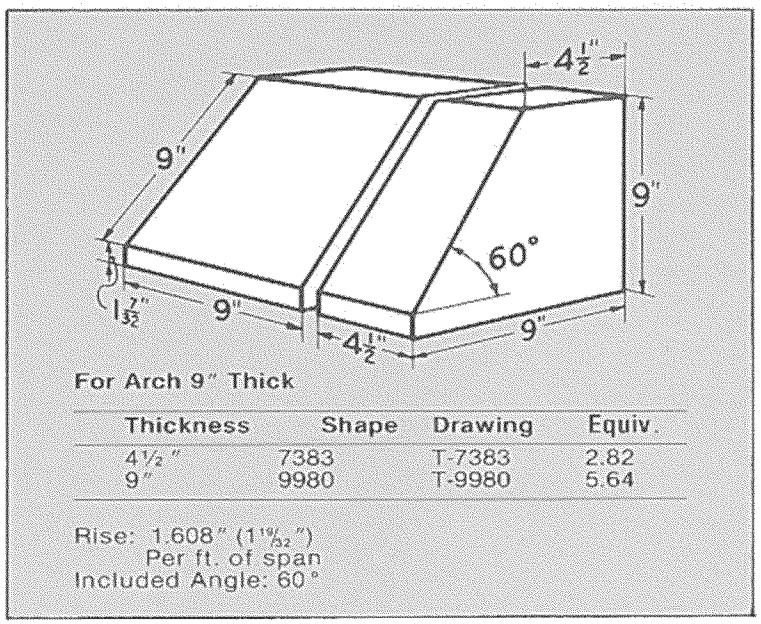

[redacted]

Quotation

Quotation number	881004138
Page	3 / 3
Place, date	Falconer, 11/11/2013
Your reference	GTU# 13-1655 Uroboros
RHI Project number	13/4824
Version	01/00

RHI

RHI US Ltd.
1870 New York Avenue
Falconer, NY 14733-1740-USA
Phone: 716-483-7200
Fax: 716-665-2478
www.rhi-ag.com
www.rhi-monofrax.com

Item	Drawing / Item description	Customer item description	Qty.	Unit	Unit weight [KG]	Total weight [KG]	Unit price [USD]	Total value [USD]
	BOWL							
000100	CS3 DCL 542X152X350	300 542X152X350	3	PC	106.1	318.3	1,247.87	3,743.60
						318.3		**3,743.60**
000200	CS3 EPIC-3 M-	301	2	PC	156.1	312.1	1,910.30	3,820.60
						312.1		**3,820.60**
000300	CS3 EPIC-3 M-	302	1	PC	153.0	153.0	1,934.01	1,934.01
						153.0		**1,934.01**
000400	CS3 EPIC-3 M-	303	1	PC	153.0	153.0	1,934.01	1,934.01
						153.0		**1,934.01**
000500	CS3 EPIC-3 M-	304	2	PC	156.1	312.1	1,910.30	3,820.60
						312.1		**3,820.60**
000600	CS3 EPIC-3 M-	305	1	PC	153.0	153.0	1,934.01	1,934.01
						153.0		**1,934.01**
000700	CS3 EPIC-3 M-	306	1	PC	153.0	153.0	1,934.01	1,934.01
						153.0		**1,934.01**
	Total value:							**19,120.84**

Signature Lou Wheel Date 11/11/2013

ED_000719_00031754-00001

9-9

ARGENT ENTERPRISES INCORPORATED

August 27th 2013
Uroboros Glass Studios.
2139, N. Kerby Avenue,
Portland,
Oregon 97227.

INVOICE

UROBOROS GLASS STUDIOS INC P O # 01152013JK
MOTIM FUSED CAST REFRACTORIES LTD Quotation # 11-3-0090
A.E. Inc Ref: 2013 / P O OUT / 1405

This is our invoice for your Purchase Order to Motim Fused Cast Refractories Ltd for the supply of the materials, as itemized below: -

For the two (2) 500 lb tanks No's 19 & 21 to drawing #M8290

(4) Four Special shape	/POS 1	Zirkosit-S	KL/3	@ $2,318.00 ea.	$ 9,272.00
(4) Four special shape	/POS 2	Zirkosit-S	KL/3	@ $1,677.00 ea.	$ 6,708.00
(2) Two 490* 129* 694	/POS 3	Zirkosit-S	KL/1	@ $1,180.00 ea.	$ 2,360.00
Total					**$18,340.00**

For the 1000 lb tank No. 4 to drawing #M8292

2 (Two) Special Shape	/BL 1R.BL.4R	Zirkosit-S	KL/3	@ $1,403.00 ea.	$ 2,806.00
2 (Two) Special Shape	/BL 1L.BL.4L	Zirkosit-S	KL/3	@ $1,403.00 ea.	$ 2,806.00
2 (Two) Special Shape	/BL 2R.BL.2L	Zirkosit-S	KL/3	@ $2,920.00 ea.	$ 5,840.00
1 (One) 541*152*1051	/BL 3	Zirkosit-S	KL/1	@ $2,319.00 ea.	$ 2,319.00
Total					**$13,771.00**

M Cirkom – 30LZ Refractory Concrete 1,750 kgs in 25 kgs Bags @ $2.17 kg	$ 3,797.50
Total	**$35,908.50**
Freight Costs C I P Portland OR	$ 3,700.00
Insurance	$ 250.00
Customs Clearance Fees (see attached)	$ 481.72
Total this purchase order	**$40,340.22**

Payment Terms: - 50 % 60 days from Motim invoice date ~~of July 11th~~ 2013
Due date - September 9th 2013 **$20,170.11**
50 % 150 days from Motim invoice date ~~of July 11th~~ 2013
Due date – January 7th 2014 **$20,170.11**

For and on behalf of Motim Fused Cast Refractories Ltd & Argent Enterprises, Inc

Lyn Argent.

Lyn Argent.
Commercial Accounts.

PAID
SEP - 4 2013

ARGENT ENTERPRISES, INC.
P O Box 163, Graysville, Pa 15337-0163. USA. Phone #724-499-5800 Fax #724-499-5715 E-mail aeinc@windstream.net
A. E. Inc is the agent for several glass related suppliers, please contact us directly or visit our website at www.aeincglass.com

RHI

RHI US Ltd.
1870 New York Avenue
Falconer, NY 14733
E-mail: glass@rhi-ag.com
www.rhi-ag.com

Offer: **13-1767**
Date: **December 16, 2013**

Uroboros

Attention: **Mike Zic**

Sales & Engineering:
Lori Whalen
Phone: (513) 753-1254 ext 302
Mobile: (513) 310-7310
e-mail: lori.whalen@rhi-ag.com

Customer Service
Lynn Brown
Phone 513-753-1254 ext. 304
e-mail: Lynn.brown@rhi-ag.com

Your inquiry: 1000# Tank

Thank you very much for your inquiry. Based on our general conditions of sales for refractories, we are pleased to offer you:

Item	Description	Total weight (kg)	Value (USD)
001	As specified	1,373	$7,128.50
002	Packing Charges		$120.00
003	Mould Charges		$4,690.00
	Net Total Value, FCA – Our Plants		**$11,938.50**

Terms of Delivery:
FCA – Our Plants according to Incoterms 2010, liner terms, packing included, duties unpaid

Terms of Payment :
Net 30 Days

Date of Delivery:
Delivery time is currently 12-14 weeks, Allow additional time for transport.

Packing:
On SIREX pallets suitable for sea freight.

Country of Origin:
Germany

Validity:
30 days from proforma date. We reserve the rights to revise prices after 30 days.

ED_000719_00031756-00001

RHI

RHI US Ltd.
1870 New York Avenue
Falconer, NY 14733
E-mail: glass@rhi-ag.com
www.rhi-ag.com

Offer: **13-1767**
Date: **December 16, 2013**

Other Terms

If the agreed delivery date is postponed at the customer's request or if the customer calls for delivery of the delivery item late, the contractor shall be entitled to demand a contractual penalty in the amount of 0.5% of the gross invoice amount per commenced calendar week after expiry of one week after the original delivery date but not more than 5% of the gross invoice amount. The contractor may also store the delivery item externally. In any case the customer shall have to bear the storage cost actually incurred, irrespective of whether such cost have accrued through internal or external storage.

Furthermore the invoice shall become due for payment as of the original delivery date irrespective of the actual delivery date. Even if no delivery is effected, title shall pass to the customer upon payment of the purchase price. The risk shall pass already at the original delivery date.

If the customer fails to observe an acceptance date which was jointly fixed, the customer himself may effect acceptance with the relevant documentation.

If costs for raw and auxiliary materials, duties, consular fees, wages or freights, insurance premiums and other incidentals included in the price change or new costs with respect to the fulfilment of performance arise, the seller is entitled to adjust the prices within the framework of the incurred alterations in costs, whereby the principles of equitable discretion have to be obeyed.

The offer and its contents are confidential and privileged information and is only for your application. Dissemination to third parties are not allowed and approval is required from RHI US LTD. For each dissemination without our approval, we reserve the right to charge to you EUR 5.000,-.

We hope you will understand that we can only recognise your buying conditions so far as they are not contrary to our own general sales conditions because our general conditions take into account the particularities concerning the manufacture and installation of refractories and therefore have to be given priority.

We trust that our offer is to your satisfaction. Please do not hesitate to contact us for further details if you should have any questions. We would be pleased to receive your order.

Yours sincerely,

RHI US LTD

Lori Whalen Lynn Brown

ED_000719_00031756-00002

RHI US Ltd.	Offer-Specification	client information	Document	Rev.	Name	Date
	Client: Uroboros, Portland - Oregon	Offer No.: 13-1764	13-1764		Weber/TP	12.12.2013
	Furnace:	Document client:				

REV	item	article no.	shape no.	shape name	grade	WBA	description	drawing / dimensions	quantity nec	quantity spare	quantity total	u	weight [kg] per unit	weight [kg] total kg	price per unit	price unit	price total
													22				
		Bill of Materials - 1000# Tank															
	1			S18X16X6	Supral 40	SW	straight	457,2x406,4x152,4	1		1	pc	61.16	61	151.62	USD/pc	151.62
	2			x	Supral 40	SW	shape	dwg. Block FW2	1		1	pc	59.25	59	381.10	USD/pc	381.10
	3			x	Supral 40	SW	shape	dwg. Block BW1	1		1	pc	127.11	127	817.57	USD/pc	817.57
	4			S211/2X6X41/2	Supral 40	SW	straight	546,1x152,4x114,3	1		1	pc	20.55	21	85.36	USD/pc	85.36
	5	2		x	Supral 40	SW	shape	dwg. Block BW3	1		1	pc	20.25	20	130.25	USD/pc	130.25
	6			S9X8X6	Supral 40	SW	straight	228,6x203,2x152,4	1		1	pc	15.29	15	37.90	USD/pc	37.90
	7	2		x	Didurital S67		shape	dwg. Block GP1	1		1	pc	118.49	118	475.70	USD/pc	475.70
	8			x	Supral S60	SW	shape	dwg. Block GB1	1		1	pc	16.62	17	52.34	USD/pc	52.34
	12			S32X22X3	Supral 40	SW	straight	812,8x558,8x76,2	1		1	pc	74.76	75	310.55	USD/pc	310.55
	13			S32X22X3	Supral 40	SW	straight	812,8x558,8x76,2	1		1	pc	74.76	75	310.55	USD/pc	310.55
	14			S32X22X3	Supral 40	SW	straight	812,8x558,8x76,2	1		1	pc	74.76	75	310.55	USD/pc	310.55
	15			S32X22X3	Supral 40	SW	straight	812,8x558,8x76,2	1		1	pc	74.76	75	310.55	USD/pc	310.55
	17			x	Supral 40	SW	shape	dwg. Block EW2	1		1	pc	122.33	122	385.22	USD/pc	385.22
	19			x	Supral 40	SW	shape	dwg. Block BE2	1		1	pc	119.04	119	374.86	USD/pc	374.86
	20	2		x	Resistal S60-03		plug	dwg. Block BB1	1		1	pc	12.80	13	82.33	USD/pc	82.33
	21			S241/2X131/2X41/2	Supral S60	SW	straight	622,3x342,9x114,3	1		1	pc	59.76	60	304.30	USD/pc	304.30
	22			S241/2X131/2X41/2	Supral S60	SW	straight	622,3x342,9x114,3	1		1	pc	59.76	60	304.30	USD/pc	304.30
	23			S241/2X18X41/2	Supral S60	SW	straight	622,3x457,2x114,3	1		1	pc	79.67	80	405.68	USD/pc	405.68
	24			x	Supral S60	SW	shape	dwg. Block F8	1		1	pc	37.67	38	393.73	USD/pc	393.73
	25	2		x	Supral S60	SW	shape	dwg. Block S1	1		1	pc	53.66	54	560.85	USD/pc	560.85
	26			x	Supral S60	SW	shape	dwg. Block S4	1		1	pc	57.52	58	601.20	USD/pc	601.20
	27			x	Supral S60	SW	shape	dwg. Block S5	1		1	pc	32.72	33	341.99	USD/pc	341.99
											TOTAL :			**1,373**			**7,128.50**
					mould costs RHI				1		1	pc		0	4690.00	USD/pc	4,690.00
					pre-assembly costs				1		1	pc		0	0.00	USD/pc	0.00

ED_000719_00031756-00003

REV	Item	article no.	shape no.	shape name	grade	WBA	description	drawing / dimensions	quantity nec	quantity spare	quantity total	u	weight [kg] per unit	weight [kg] total kg	price per unit	price unit	price total

Finishing Codes

WA grinded on side A (e.g. wedge ≥ 300mm lining thickness)

ZE 4 faces grinded (Tolerance: 0, -2mm)

SW 6 faces grinded (Tolerance: 0, -2mm)

BS component part loose (consisting of several parts with different shapes)

BN component part (consisting of several parts with same basis shape, e.g. straight arch)

ED_000719_00031756-00004

DSF Refractories & Minerals Limited
Friden, Newhaven
Nr. Buxton
Derbyshire SK17 0DX
Ph. +44 (0)1629 636271
Fx. +44 (0)1629 636892
Em. info@dsf.co.uk
Wb. www.dsf.co.uk

SALES INVOICE

8.2

$23,481.29 /
J Kerry
7-25-13

RECEIVED
JUL 02 2013
UROBOROS GLASS

CUSTOMER:
UROBOROS GLASS STUDIOS INC
2139 N KERBY
PORTLAND, OR 97227
USA

INVOICE NO 75198 PAGE 1
DESPATCH NO DN51184
INV/TAX DATE 18/06/13
ACCOUNT NO UROBO1

$23,481.29

DSF ORDER NUMBER: REF35211 CUSTOMER ORDER NO: 031113JAMES

LINE	PRODUCT DESC	WEIGHT	QUANTITY	UNIT	PRICE	VALUE	VAT%	VAT VALUE
1	Q9851334100-G6 CF40 BLOCK 18"X9"X6"	35.13	1	EACH	126.21	126.21	0.00	0.00
2	TANK 500# NO.1 ITEM B1 Q9852379314-G6 CF40 DRG.500#TANK REV2/11/13 IT B2	29.19	1	EACH	105.14	105.14	0.00	0.00
3	TANK 500# NO.1 Q9852379315-G6 CF40 DRG.500#TANK REV2/11/13 IT B3	136.27	1	EACH	490.80	490.80	0.00	0.00
4	TANK 500# NO.1 Q9812379316-G6 CC FRISIL H DRG.500#TANKREV 2/11/13 B4T	106.48	1	EACH	534.34	534.34	0.00	0.00
5	TANK 500# NO.1 Q9812379317-G6 CC FRISIL H DRG.500#TANKREV 2/11/13 B4B	48.43	1	EACH	331.41	331.41	0.00	0.00
6	TANK 500# NO.1 Q9812379318-G6 CC FRISIL H DRG.500#TANKREV 2/11/13 B5	16.85	1	EACH	135.87	135.87	0.00	0.00
7	TANK 500# NO.1 Q9811379332-G6 CC FRISIL H 13 1/2"X6"X6"	18.95	1	EACH	135.87	135.87	0.00	0.00

PAID
AUG - 6 2013

Five Star Health & Safety Management System Audit ★★★★★ Awarded 2008
BRITISH SAFETY COUNCIL
INVESTOR IN PEOPLE
Certificate No. FM1697

ED_000719_00031757-00001

DSF Refractories & Minerals Limited
Friden, Newhaven
Nr. Buxton
Derbyshire SK17 0DX
Ph. +44 (0)1629 636271
Fx. +44 (0)1629 636892
Em. info@dsf.co.uk
Wb. www.dsf.co.uk

SALES INVOICE

CUSTOMER:
UROBOROS GLASS STUDIOS INC
2139 N KERBY
PORTLAND, OR 97227
USA

INVOICE NO 75198 PAGE 2
DESPATCH NO DN51184
INV/TAX DATE 18/06/13
ACCOUNT NO UROB01

DSF ORDER NUMBER: REF35211 CUSTOMER ORDER NO: 031113JAMES

LINE	PRODUCT DESC	WEIGHT	QUANTITY	UNIT	PRICE	VALUE	VAT%	VAT VALUE
8	TANK 500# NO.1 ITEM B6 Q9851356925-G6 CF40 15"X8 1/2"X6"	27.58	1	EACH	99.33	99.33	0.00	0.00
9	TANK 500# NO.1 ITEM B7 Q9851356925-G6 CF40 15"X8 1/2"X6"	27.58	1	EACH	99.33	99.33	0.00	0.00
10	TANK 500# NO.1 ITEM B8 Q9851356926-G6 CF40 32"X6"X3"	20.77	2	EACH	74.80	149.60	0.00	0.00
11	TANK 500# NO.1 ITEM B9 Q9852379319-G6 CF40 DRG.500#TANK REV2/11/13 ITEM B10	98.43	1	EACH	354.51	354.51	0.00	0.00
12	TANK 500# NO.1 Q4382374321-G6 DSF CS ULC DRG.500#TANK REV2/11/13 B11	51.49	1	EACH	335.71	335.71	0.00	0.00
13	TANK 500# NO.1 Q9851356929-G6 CF40 50"X21"X3"	113.56	1	EACH	409.01	409.01	0.00	0.00
14	TANK 500# NO.1 ITEM BB1 Q9851356929-G6 CF40 50"X21"X3"	113.56	1	EACH	409.01	409.01	0.00	0.00

Five Star Health & Safety Management System Audit ★★★★★ Awarded 2008 BRITISH SAFETY COUNCIL
INVESTOR IN PEOPLE
Certificate No. FM19

Registered in Scotland No. 144005. VAT Registered No. GB 823 8048 30.
Registered Office: 50 Lothian Road, Festival Square, Edinburgh EH3 9WJ

ED_000719_00031757-00002

DSF Refractories & Minerals Limited
Friden, Newhaven
Nr. Buxton
Derbyshire SK17 0DX
Ph. +44 (0)1629 636271
Fx. +44 (0)1629 636892
Em. info@dsf.co.uk
Wb. www.dsf.co.uk

SALES INVOICE

CUSTOMER:
UROBOROS GLASS STUDIOS INC
2139 N KERBY
PORTLAND, OR 97227
USA

INVOICE NO 75198 PAGE 3
DESPATCH NO DN51184
INV/TAX DATE 18/06/13
ACCOUNT NO UROB01

DSF ORDER NUMBER: REF35211 CUSTOMER ORDER NO: 031113JAMES

LINE	PRODUCT DESC	WEIGHT	QUANTITY	UNIT	PRICE	VALUE	VAT%	VAT VALUE
	TANK 500# NO.1 ITEM BB2							
15	Q9812379322-G6	70.14	1	EACH	426.74	426.74	0.00	0.00
	CC FRISIL H DRG.500#TANK REV2/11/13 BN1							
	TANK 500# NO.1							
16	Q9811356933-G6	18.95	1	EACH	207.20	207.20	0.00	0.00
	CC FRISIL H 18"X6"X4 1/2"							
	TANK 500# NO.1 ST1							
17	Q9811356934-G6	23.69	1	EACH	194.40	194.40	0.00	0.00
	CC FRISIL H 18"X 7 1/2"X4 1/2"							
	TANK 500# NO.1 ITEM ST2							
18	Q9812379323-G6	102.44	1	EACH	510.37	510.37	0.00	0.00
	CC FRISIL H DRG.500#TANKREV2/11/13 PM1							
	TANK 500# NO.1							
19	Q9812379324-G6	16.14	2	EACH	124.48	248.96	0.00	0.00
	CC FRISIL H DRG.500#TANKREV2/11/13 HB1							
	TANK 500# NO.1							
20	Q9851334105-G6	46.84	3	EACH	168.27	504.81	0.00	0.00
	CF40 BLOCK 18"X12"X6"							

TANK 500# NO.1 ITEM MAINT
Your contact for commercial enquiries is Sarah Wells on
01629 636271 (ext 104)
Your contact for despatch & delivery is Leah Brindley on

Registered in Scotland No.144005. VAT Registered No. GB 823 8048 30.
Registered Office: 50 Lothian Road, Festival Square, Edinburgh EH3 9WJ

Five Star Health & Safety Management System Audit ★★★★★ Awarded 2008
BRITISH SAFETY COUNCIL
INVESTOR IN PEOPLE

ED_000719_00031757-00003

DSF Refractories
& Minerals Limited
Friden, Newhaven
Nr. Buxton
Derbyshire SK17 0DX
Ph. +44 (0)1629 636271
Fx. +44 (0)1629 636892
Em. info@dsf.co.uk
Wb. www.dsf.co.uk

SALES INVOICE

CUSTOMER:
UROBOROS GLASS STUDIOS INC
2139 N KERBY
PORTLAND, OR 97227
USA

INVOICE NO 75198 PAGE 4
DESPATCH NO DN51184
INV/TAX DATE 18/06/13
ACCOUNT NO UROB01

DSF ORDER NUMBER: REF35211 CUSTOMER ORDER NO: 031113JAMES

LINE	PRODUCT DESC	WEIGHT	QUANTITY	UNIT	PRICE	VALUE	VAT%	VAT VALUE

01629 636271 (ext 105)
Customer contact: JAMES KOENIG
TEL: 503 284 4900
E-MAIL:
HAULIER : LOCKWOOD FREIGHT
LOAD 1 : 1 X 20FT CONTAINER (PACKED WITH DN51185 & DN51186)
NUMBER OF PALLETS : 2 PALLETS
NET WEIGHT: 1253.06 KG GROSS WEIGHT: 1303.06 KG
TANK 500#
Payment: By Telegraphic Transfer to our account
Yorkshire Bank, Fargate, Sheffield, South Yorkshire, S1 1LL
BIC YORKGB22XXX
Account Number 4425449661502
IBAN: GB41YORK05980244966502

Price is DDU Portland OR97227, USA (Incoterm 2000)
We certify that the goods to which this invoice relates are of UK origin.

TARIFF CODE: 6902.20.1020
ROAD/SEA TRANSPORT

Registered in Scotland No. 144005. VAT Registered No. GB 823 8048 30.
Registered Office: 50 Lothian Road, Festival Square, Edinburgh EH3 9WJ

Five Star Health & Safety Management System Audit ★★★★★ Awarded 2008 BRITISH SAFETY COUNCIL
INVESTOR IN PEOPLE
Certificate No. FM1697

ED_000719_00031757-00004

DSF Refractories & Minerals Limited
Friden, Newhaven
Nr. Buxton
Derbyshire SK17 0DX
Ph. +44 (0)1629 636271
Fx. +44 (0)1629 636892
Em. info@dsf.co.uk
Wb. www.dsf.co.uk

SALES INVOICE

CUSTOMER:
UROBOROS GLASS STUDIOS INC
2139 N KERBY
PORTLAND, OR 97227
USA

INVOICE NO 75198 PAGE 5
DESPATCH NO DN51184
INV/TAX DATE 18/06/13
ACCOUNT NO UROB01

DSF ORDER NUMBER: REF35211 CUSTOMER ORDER NO: 031113JAMES

LINE	PRODUCT DESC	WEIGHT	QUANTITY	UNIT	PRICE	VALUE	VAT%	VAT VALUE

DELIVERY ADDRESS:
UROBOROS GLASS STUDIOS INC
2139 N KERBY
PORTLAND, OR 97227
USA

TOTAL GOODS	5808.62
PLUS VAT	0.00
TOTAL VALUE	5808.62

✓ 7-25-13

TERMS 30 DAYS FROM END OF MONTH
CURRENCY USD

DSF Refractories & Minerals Limited
Friden, Newhaven
Nr. Buxton
Derbyshire SK17 0DX
Ph. +44 (0)1629 636271
Fx. +44 (0)1629 636892
Em. info@dsf.co.uk
Wb. www.dsf.co.uk

SALES INVOICE

CUSTOMER:
UROBOROS GLASS STUDIOS INC
2139 N KERBY
PORTLAND, OR 97227
USA

INVOICE NO 75199 PAGE 1
DESPATCH NO DN51185
INV/TAX DATE 18/06/13
ACCOUNT NO UROB01

DSF ORDER NUMBER: REF35211 CUSTOMER ORDER NO: 031113JAMES

LINE	PRODUCT DESC	WEIGHT	QUANTITY	UNIT	PRICE	VALUE	VAT%	VAT VALUE
1	Q9851334100-G6 CF40 BLOCK 18"X9"X6"	35.13	1	EACH	126.21	126.21	0.00	0.00
2	TANK 500# NO.2 ITEM B1 Q9852379314-G6 CF40 DRG.500#TANK REV2/11/13 IT B2	29.19	1	EACH	105.14	105.14	0.00	0.00
3	TANK 500# NO.2 Q9852379315-G6 CF40 DRG.500#TANK REV2/11/13 IT B3	136.27	1	EACH	490.80	490.80	0.00	0.00
4	TANK 500# NO.2 Q9812379316-G6 CC FRISIL H DRG.500#TANKREV 2/11/13 B4T	106.48	1	EACH	534.34	534.34	0.00	0.00
5	TANK 500# NO.2 Q9812379317-G6 CC FRISIL H DRG.500#TANKREV 2/11/13 B4B	48.43	1	EACH	331.41	331.41	0.00	0.00
6	TANK 500# NO.2 Q9812379318-G6 CC FRISIL H DRG.500#TANKREV 2/11/13 B5	16.85	1	EACH	135.87	135.87	0.00	0.00
7	TANK 500# NO.2 Q9811379332-G6 CC FRISIL H 13 1/2"X6"X6"	18.95	1	EACH	135.87	135.87	0.00	0.00

Five Star Health & Safety Management System Audit ★★★★★ Awarded 2008 BRITISH SAFETY COUNCIL
INVESTOR IN PEOPLE
Certificate No. FM18697

Registered in Scotland No.144005. VAT Registered No. GB 823 8048 30.
Registered Office: 50 Lothian Road, Festival Square, Edinburgh EH3 9WJ

ED_000719_00031757-00006

DSF Refractories & Minerals Limited
Friden, Newhaven
Nr. Buxton
Derbyshire SK17 0DX
Ph. +44 (0)1629 636271
Fx. +44 (0)1629 636892
Em. info@dsf.co.uk
Wb. www.dsf.co.uk

SALES INVOICE

CUSTOMER:
UROBOROS GLASS STUDIOS INC
2139 N KERBY
PORTLAND, OR 97227
USA

INVOICE NO 75199 PAGE 2
DESPATCH NO DN51185
INV/TAX DATE 18/06/13
ACCOUNT NO UROB01

DSF ORDER NUMBER: REF35211 CUSTOMER ORDER NO: 031113JAMES

LINE	PRODUCT DESC	WEIGHT	QUANTITY	UNIT	PRICE	VALUE	VAT%	VAT VALUE
8	TANK 500# NO.2 ITEM B6 Q9851356925-G6 CF40 15"X8 1/2"X6"	27.58	1	EACH	99.33	99.33	0.00	0.00
9	TANK 500# NO.2 ITEM B7 Q9851356925-G6 CF40 15"X8 1/2"X6"	27.58	1	EACH	99.33	99.33	0.00	0.00
10	TANK 500# NO.2 ITEM B8 Q9851356926-G6 CF40 32"X6"X3"	20.77	2	EACH	74.80	149.60	0.00	0.00
11	TANK 500# NO.2 ITEM B9 Q9852379319-G6 CF40 DRG.500#TANK REV2/11/13 ITEM B10	98.43	1	EACH	354.51	354.51	0.00	0.00
12	TANK 500# NO.2 Q4382374321-G6 DSF CS ULC DRG.500#TANK REV2/11/13 B11	51.49	1	EACH	335.71	335.71	0.00	0.00
13	TANK 500# NO.2 Q9851356929-G6 CF40 50"X21"X3"	113.56	1	EACH	409.01	409.01	0.00	0.00
14	TANK 500# NO.2 ITEM BB1 Q9851356929-G6 CF40 50"X21"X3"	113.56	1	EACH	409.01	409.01	0.00	0.00

Five Star Health & Safety Management System Audit ★★★★★ Awarded 2008 BRITISH SAFETY COUNCIL
INVESTOR IN PEOPLE

Registered in Scotland No. 144005. VAT Registered No. GB 823 8048 30.
Registered Office: 50 Lothian Road, Festival Square, Edinburgh EH3 9WJ

ED_000719_00031757-00007

DSF Refractories
& Minerals Limited
Friden, Newhaven
Nr. Buxton
Derbyshire SK17 0DX
Ph. +44 (0)1629 636271
Fx. +44 (0)1629 636892
Em. info@dsf.co.uk
Wb. www.dsf.co.uk

SALES INVOICE

CUSTOMER:
UROBOROS GLASS STUDIOS INC
2139 N KERBY
PORTLAND, OR 97227
USA

INVOICE NO 75199 PAGE 3
DESPATCH NO DN51185
INV/TAX DATE 18/06/13
ACCOUNT NO UROB01

DSF ORDER NUMBER: REF35211 CUSTOMER ORDER NO: 031113JAMES

LINE	PRODUCT DESC	WEIGHT	QUANTITY	UNIT	PRICE	VALUE	VAT%	VAT VALUE
	TANK 500# NO.2 ITEM BB2							
15	Q9812379322-G6	70.14	1	EACH	426.74	426.74	0.00	0.00
	CC FRISIL H DRG.500#TANK REV2/11/13 BN1							
	TANK 500# NO.2							
16	Q9811356933-G6	18.95	1	EACH	207.20	207.20	0.00	0.00
	CC FRISIL H 18"X6"X4 1/2"							
	TANK 500# NO.2 ITEM ST1							
17	Q9811356934-G6	23.69	1	EACH	194.40	194.40	0.00	0.00
	CC FRISIL H 18"X 7 1/2"X4 1/2"							
	TANK 500# NO.2 ITEM ST2							
18	Q9812379323-G6	102.44	1	EACH	510.37	510.37	0.00	0.00
	CC FRISIL H DRG.500#TANKREV2/11/13 PM1							
	TANK 500# NO.2							
19	Q9812379324-G6	16.14	2	EACH	124.48	248.96	0.00	0.00
	CC FRISIL H DRG.500#TANKREV2/11/13 HB1							
	TANK 500# NO.2							
20	Q9851334105-G6	46.84	3	EACH	168.27	504.81	0.00	0.00
	CF40 BLOCK 18"X12"X6"							
	TANK 500# NO.2 ITEM MAINT							

Your contact for commercial enquiries is Sarah Wells on 01629 636271 (ext 104)
Your contact for despatch & delivery is Leah Brindley on

Five Star Health & Safety Management System Audit ★★★★★ Awarded 2008 BRITISH SAFETY COUNCIL
INVESTOR IN PEOPLE

ED_000719_00031757-00008

DSF Refractories & Minerals Limited
Friden, Newhaven
Nr. Buxton
Derbyshire SK17 0DX
Ph. +44 (0)1629 636271
Fx. +44 (0)1629 636892
Em. info@dsf.co.uk
Wb. www.dsf.co.uk

SALES INVOICE

CUSTOMER:
UROBOROS GLASS STUDIOS INC
2139 N KERBY
PORTLAND, OR 97227
USA

INVOICE NO 75199 PAGE 4
DESPATCH NO DN51185
INV/TAX DATE 18/06/13
ACCOUNT NO UROB01

DSF ORDER NUMBER: REF35211 CUSTOMER ORDER NO: 031113JAMES

LINE	PRODUCT DESC	WEIGHT	QUANTITY	UNIT	PRICE	VALUE	VAT%	VAT VALUE

01629 636271 (ext 105)
Customer contact: JAMES KOENIG
TEL: 503 284 4900
E-MAIL:
HAULIER : LOCKWOOD FREIGHT
LOAD 1 : PACKED WITH DN51184 & DN51186
NUMBER OF PALLETS : 2 PALLETS
NET WEIGHT: 1253.06 KG GROSS WEIGHT: 1303.06 KG
TANK 500#
Payment: By Telegraphic Transfer to our account
Yorkshire Bank, Fargate, Sheffield, South Yorkshire, S1 1LL
BIC YORKGB22XXX
Account Number 4425449661502
IBAN: GB41YORK05980244966502

Price DDU Portland, OR97227, USA (Incoterm 2000)
We certify that the goods to which this invoice relates are of UK origin.

TARIFF CODE: 6902.20.1020
ROAD/SEA TRANSPORT

Five Star Health & Safety Management System Audit ★★★★★ Awarded 2008 BRITISH SAFETY COUNCIL
INVESTOR IN PEOPLE

Registered in Scotland No. 144005. VAT Registered No. GB 823 8048 30.
Registered Office: 50 Lothian Road, Festival Square, Edinburgh EH3 9WJ

ED_000719_00031757-00009

DSF Refractories & Minerals Limited
Friden, Newhaven
Nr. Buxton
Derbyshire SK17 0DX
Ph. +44 (0)1629 636271
Fx. +44 (0)1629 636892
Em. info@dsf.co.uk
Wb. www.dsf.co.uk

SALES INVOICE

CUSTOMER:
UROBOROS GLASS STUDIOS INC
2139 N KERBY
PORTLAND, OR 97227
USA

INVOICE NO 75199 PAGE 5
DESPATCH NO DN51185
INV/TAX DATE 18/06/13
ACCOUNT NO UROB01

DSF ORDER NUMBER: REF35211 CUSTOMER ORDER NO: 031113JAMES

LINE	PRODUCT DESC	WEIGHT	QUANTITY	UNIT	PRICE	VALUE	VAT%	VAT VALUE

DELIVERY ADDRESS:
UROBOROS GLASS STUDIOS INC
2139 N KERBY
PORTLAND, OR 97227
USA

TOTAL GOODS	5808.62
PLUS VAT	0.00
TOTAL VALUE	5808.62

7/25/13

TERMS 30 DAYS FROM END OF MONTH
CURRENCY USD

Registered in Scotland No. 144005. VAT Registered No. GB 823 8048 30.
Registered Office: 50 Lothian Road, Festival Square, Edinburgh EH3 9WJ

Five Star Health & Safety Management System Audit ★★★★★ Awarded 2008
BRITISH SAFETY COUNCIL
INVESTOR IN PEOPLE
Certificate No. FM1697

ED_000719_00031757-00010

DSF Refractories & Minerals Limited
Friden, Newhaven
Nr. Buxton
Derbyshire SK17 0DX
Ph. +44 (0)1629 636271
Fx. +44 (0)1629 636892
Em. info@dsf.co.uk
Wb. www.dsf.co.uk

SALES INVOICE

CUSTOMER:
UROBOROS GLASS STUDIOS INC
2139 N KERBY
PORTLAND, OR 97227
USA

INVOICE NO 75200 PAGE 1
DESPATCH NO DN51186
INV/TAX DATE 18/06/13
ACCOUNT NO UROB01

DSF ORDER NUMBER: REF35211 CUSTOMER ORDER NO: 031113JAMES

LINE	PRODUCT DESC	WEIGHT	QUANTITY	UNIT	PRICE	VALUE	VAT%	VAT VALUE
1	Q9851354591-G6 DSF CF40 18"X16"X6"	62.30	1	EACH	224.38	224.38	0.00	0.00
2	TANK 1000# ITEM FW1 Q9852370725-G6 CF40 DRG.1000# TANK REV.11-8-11 IT FW2	60.35	1	EACH	217.36	217.36	0.00	0.00
3	TANK 1000# Q9852370726-G6 CF40 DRG.1000# TANK REV.11-8-11 IT BW1	129.47	1	EACH	466.30	466.30	0.00	0.00
4	TANK 1000# Q9851370727-G6 CF40 21 1/2"X6"X4 1/2"	20.93	1	EACH	75.38	75.38	0.00	0.00
5	TANK 1000# ITEM BW2 Q9852370728-G6 CF40 DRG.1000# TANK REV.11-8-11 IT BW3	20.61	1	EACH	74.22	74.22	0.00	0.00
6	TANK 1000# Q9851370729-G6 CF40 9"X8"X6"	15.57	1	EACH	56.08	56.08	0.00	0.00
7	TANK 1000# ITEM BW4 Q9812370730-G6 CC FRISIL H DRG.1000TANK REV.11-8-11 GP1	102.44	2	EACH	510.37	1020.74	0.00	0.00

Five Star Health & Safety Management System Audit ★★★★★ Awarded 2008 BRITISH SAFETY COUNCIL
INVESTOR IN PEOPLE

Registered in Scotland No. 144005. VAT Registered No. GB 823 8048 30.
Registered Office: 50 Lothian Road, Festival Square, Edinburgh EH3 9WJ

ED_000719_00031757-00011

DSF Refractories & Minerals Limited
Friden, Newhaven
Nr. Buxton
Derbyshire SK17 0DX
Ph. +44 (0)1629 636271
Fx. +44 (0)1629 636892
Em. info@dsf.co.uk
Wb. www.dsf.co.uk

SALES INVOICE

CUSTOMER:
UROBOROS GLASS STUDIOS INC
2139 N KERBY
PORTLAND, OR 97227
USA

INVOICE NO 75200 PAGE 2
DESPATCH NO DN51186
INV/TAX DATE 18/06/13
ACCOUNT NO UROB01

DSF ORDER NUMBER: REF35211 CUSTOMER ORDER NO: 031113JAMES

LINE	PRODUCT DESC	WEIGHT	QUANTITY	UNIT	PRICE	VALUE	VAT%	VAT VALUE
8	TANK 1000# Q9812370731-G6 CC FRISIL H DRG.1000TANK REV.11-8-11 GB1	16.14	10	EACH	124.48	1244.80	0.00	0.00
9	TANK 1000# Q9851354167-G6 CF40 32"X22"X3"	76.14	1	EACH	274.24	274.24	0.00	0.00
10	TANK 1000# ITEM BF1 Q9851354167-G6 CF40 32"X22"X3"	76.14	1	EACH	274.24	274.24	0.00	0.00
11	TANK 1000# ITEM BF2 Q9851354167-G6 CF40 32"X22"X3"	76.14	1	EACH	274.24	274.24	0.00	0.00
12	TANK 1000# ITEM BF3 Q9851354167-G6 CF40 32"X22"X3"	76.14	1	EACH	274.24	274.24	0.00	0.00
13	TANK 1000# ITEM BF4 Q9852370732-G6 CF40 DRG.1000# TANK REV.11-8-11 IT EW2	124.59	1	EACH	448.74	448.74	0.00	0.00
14	TANK 1000# Q9852370733-G6 CF40 DRG.1000# TANK REV.11-8-11 IT BE2	121.24	1	EACH	436.67	436.67	0.00	0.00

Five Star Health & Safety Management System Audit ★★★★★ Awarded 2008 BRITISH SAFETY COUNCIL
INVESTOR IN PEOPLE

Registered in Scotland No. 144005. VAT Registered No. GB 823 8048 30.
Registered Office: 50 Lothian Road, Festival Square, Edinburgh EH3 9WJ

ED_000719_00031757-00012

DSF Refractories & Minerals Limited
Friden, Newhaven
Nr. Buxton
Derbyshire SK17 0DX
Ph. +44 (0)1629 636271
Fx. +44 (0)1629 636892
Em. info@dsf.co.uk
Wb. www.dsf.co.uk

SALES INVOICE

CUSTOMER:
UROBOROS GLASS STUDIOS INC
2139 N KERBY
PORTLAND, OR 97227
USA

INVOICE NO 75200 PAGE 3
DESPATCH NO DN51186
INV/TAX DATE 18/06/13
ACCOUNT NO UROB01

DSF ORDER NUMBER: REF35211 CUSTOMER ORDER NO: 031113JAMES

LINE	PRODUCT DESC	WEIGHT	QUANTITY	UNIT	PRICE	VALUE	VAT%	VAT VALUE
15	TANK 1000# Q4382379315-G6 DSF CS ULC DRG.1000#TANK REV.11-8-11 BB1	12.75	3	EACH	83.14	249.42	0.00	0.00
16	TANK 1000# Q4381379330-G6 DSF CS ULC 24 1/2"X13 1/2"X4 1/2"	61.71	1	EACH	402.35	402.35	0.00	0.00
17	TANK 1000# ITEM F2 Q4381379330-G6 DSF CS ULC 24 1/2"X13 1/2"X4 1/2"	61.71	1	EACH	402.35	402.35	0.00	0.00
18	TANK 1000# ITEM F3 Q4381379331-G6 DSF CS ULC 24 1/2"X18"X4 1/2"	82.28	1	EACH	536.46	536.46	0.00	0.00
19	TANK 1000# ITEM F6 Q4382379326-G6 DSF CS ULC DRG.1000#TANK REV.11-8-11 F8	38.89	1	EACH	253.57	253.57	0.00	0.00
20	TANK 1000# Q4382379327-G6 DSF CS ULC DRG.1000#TANK REV.11-8-11 S1	73.04	1	EACH	476.22	476.22	0.00	0.00
21	TANK 1000# Q4382379328-G6 DSF CS ULC DRG.1000#TANK REV.11-8-11 S4	59.40	1	EACH	387.28	387.28	0.00	0.00

Five Star Health & Safety Management System Audit ★★★★★ Awarded 2008 BRITISH SAFETY COUNCIL
INVESTOR IN PEOPLE
Certificate No. FM8697

Registered in Scotland No. 144005. VAT Registered No. GB 823 8048 30.
Registered Office: 50 Lothian Road, Festival Square, Edinburgh EH3 9WJ

ED_000719_00031757-00013

DSF Refractories & Minerals Limited
Friden, Newhaven
Nr. Buxton
Derbyshire SK17 0DX
Ph. +44 (0)1629 636271
Fx. +44 (0)1629 636892
Em. info@dsf.co.uk
Wb. www.dsf.co.uk

SALES INVOICE

CUSTOMER:
UROBOROS GLASS STUDIOS INC
2139 N KERBY
PORTLAND, OR 97227
USA

INVOICE NO 75200 PAGE 4
DESPATCH NO DN51186
INV/TAX DATE 18/06/13
ACCOUNT NO UROB01

DSF ORDER NUMBER: REF35211 CUSTOMER ORDER NO: 031113JAMES

LINE	PRODUCT DESC	WEIGHT	QUANTITY	UNIT	PRICE	VALUE	VAT%	VAT VALUE
	TANK 1000#							
22	Q4382379329-G6	33.80	1	EACH	220.37	220.37	0.00	0.00
	DSF CS ULC DRG.1000#TANK REV11-8-11 S5							
	TANK 1000#							
23	MOULD COST		1	EACH	720.00	720.00	0.00	0.00
	PART MOULD COST							
24	PACKING		1	EACH	32.00	32.00	0.00	0.00
	PACKING CHARGE							
25	CARRIAGE		1	EACH	2822.40	2822.40	0.00	0.00
	CARRIAGE CHARGE							

Your contact for commercial enquiries is Sarah Wells on
01629 636271 (ext 104)
Your contact for despatch & delivery is Leah Brindley on
01629 636271 (ext 105)
Customer contact: JAMES KOENIG
TEL: 503 284 4900
E-MAIL:
HAULIER : LOCKWOOD FREIGHT
LOAD 1 : PACKED WITH DN51184 & DN51185
NUMBER OF PALLETS : 3 PALLETS
NET WEIGHT: 1674.98 KG GROSS WEIGHT: 1749.98 KG
TANK 1000#
Payment: By Telegraphic Transfer to our account
Yorkshire Bank, Fargate, Sheffield, South Yorkshire, S1 1LL

Five Star Health & Safety Management System Audit ★★★★★ Awarded 2008 BRITISH SAFETY COUNCIL
INVESTOR IN PEOPLE

Registered in Scotland No. 144005. VAT Registered No. GB 823 8048 30.
Registered Office: 50 Lothian Road, Festival Square, Edinburgh EH3 9WJ

ED_000719_00031757-00014

DSF Refractories & Minerals Limited
Friden, Newhaven
Nr. Buxton
Derbyshire SK17 0DX
Ph. +44 (0)1629 636271
Fx. +44 (0)1629 636892
Em. info@dsf.co.uk
Wb. www.dsf.co.uk

SALES INVOICE

CUSTOMER:
UROBOROS GLASS STUDIOS INC
2139 N KERBY
PORTLAND, OR 97227
USA

INVOICE NO 75200 PAGE 5
DESPATCH NO DN51186
INV/TAX DATE 18/06/13
ACCOUNT NO UROB01

DSF ORDER NUMBER: REF35211 CUSTOMER ORDER NO: 031113JAMES

LINE	PRODUCT DESC	WEIGHT	QUANTITY	UNIT	PRICE	VALUE	VAT%	VAT VALUE

BIC YORKGB22XXX
Account Number 442544966150 2
IBAN: GB41YORK05980244966502

Price is ex-works Friden, UK (Incoterm 2000)
We certify that the goods to which this invoice relates are of UK origin.

TARIFF CODE: 6902.20.1020
ROAD/SEA TRANSPORT

DELIVERY ADDRESS:
UROBOROS GLASS STUDIOS INC
2139 N KERBY
PORTLAND, OR 97227
USA

TOTAL GOODS	11864.05
PLUS VAT	0.00
TOTAL VALUE	11864.05

TERMS 30 DAYS FROM END OF MONTH
CURRENCY USD

Registered in Scotland No. 144005. VAT Registered No. GB 823 8048 30.
Registered Office: 50 Lothian Road, Festival Square, Edinburgh EH3 9WJ

Five Star Health & Safety Management System Audit ★★★★★ Awarded 2008 BRITISH SAFETY COUNCIL
INVESTOR IN PEOPLE

ED_000719_00031757-00015

MELTS SINCE BUILD>>>				512		137	379	434	301	199	485
2015	ITEM	QTY	DESCRIPTION	5	15	3	4	19	21	24	25
Thu	Oct 1			00-96 REV:14			05-96s4 REV:10	45.12-96s4 REV:19	24-96 REV:4	45.11-96s4 REV:30	REBUILD
ALBL:	1	60-355-96-4	80 Marigold Opal, 96.0 4sq.ft.							X	
	2	60-2705-96-4	50 Orange opal&white 96.0 4sq.ft.				X	X			
SHEETS	3	60-2702-96-4	30 Orange Opal, 96.0 4sq.ft.					X			
330	4	60-424-96-4	40 Cobalt Blue 96.0 4sq.ft.						X	NEED 4	
POUNDS	5	11-296-5	30 ClearWhitePink wWhite&Pink	X			X			COLOR	
3700	6	10-55	35 Blue & White wGreen Brown Frac				X		X	BARS	
	7	61-00-96-4	35 Thin Clear 96.0 4sq.ft.	X							
	8	61-00-96 IR-4	30 Clear Thin Fusible,Irid 96.0	X							
	9	QF-00-96	150# Clear Water Qenched frit	X							
	12		-								
MELT			TRANSITION	SCRAPE			SCRAPE	COL COL 00-33	COL COL	SCRAPE	
			COLOR NAME	Clear			White	Orange Opal	Cobalt Blue	Marigold	
			BATCH Lbs.	850			900	500	500	950	
			REMELT Lbs.								
			REMELT TYPE								
			TOTAL Lbs.	850			900	500	500	950	
			MELT TEMP:	2475			2450	2475	2500	2475	
Fri	Oct 2			IDLE			IDLE	IDLE	IDLE	IDLE	REBUILD
ALBL:	1	No Production									
	2		-								
SHEETS	3		-								
0	4		-								
POUNDS	5		-								
0	6		-								
	12		-								
MELT			TRANSITION								
			COLOR NAME								
			BATCH Lbs.								
			REMELT Lbs.								
			REMELT TYPE								
			TOTAL Lbs.	0			0	0	0	0	
			MELT TEMP:	1950			1950	1950	1950	1950	

	MELTS SINCE BUILD>>>			516		137	383	437	305	203	485
2015	ITEM	QTY	DESCRIPTION	5	15	3	4	19	21	24	25
Mon	**Oct 5**			92-90 REV:			05-96s4 REV:10	91s3	32-96s4 REV:10	45.11-96s4 REV:30	REBUILD
ALBL:	1 60-355-96-4	80	Marigold Opal, 96.0 4sq.ft.							X	
	2 60-782-96-4	40	Olive green FX 96 4sq.ft.					From	X		
SHEETS	3 60-29-96-4	25	White w/Gold Pink, 96.0 4sq.ft	see			X	Remelt	NEED 4		
305	4 60-290	35	Gold-Pink, Yellow on White	70-901			X	X	COLOR		
POUNDS	5 Uncats	20	Uncats	sample			X	X	BARS		
3750	6 60-901-90-5	30	Golden Amber Fusible	X							
	7 70-901-90-5	75	Golden Amber Fibroid Fusible	X							
	12		-								
MELT	TRANSITION			COL COL			SCRAPE	TBD	COL COL COL	SCRAPE	
	COLOR NAME			Gold Amber			White	Amber Opal	Olive	Marigold	
	BATCH Lbs.			1400			800		500	950	
	REMELT Lbs.							100			
	REMELT TYPE							Cullet 91s3	already melted glass		
	TOTAL Lbs.			1400			800	100	500	950	
	MELT TEMP:			2500			2450	2200	2500	2475	
Tue	**Oct 6**			00-96 REV:14			53.1s3 REV:2	91.3m3 REV:3	71.1 REV:2	45.11-90s4 REV:5	REBUILD
ALBL:	1 60-351-90-5	65	Marigold Fusible Opal							X	
	2 60-16	35	LtBrown,TurquoiseGreen/DkBrown				X		X		
SHEETS	3 50-912	40	Butterscotch & Coffee				X	X			
225	4 50-00-96 IR-4	25	Clear Ripple-Irid 96.0	X							
POUNDS	5 61-00-96 IR-4	10	Clear Thin Fusible,Irid 96.0	X							
3300	6 60-00-96 IR-4	15	Clear Fusible-IRid 96.0	X							
	7 60-00-96-5	35	Clear FX 96.0 5sq.ft For Frit.	X							
	12		-								
MELT	TRANSITION			SCRAPE			COL COL	COL COL COL	COL	SCRAPE	
	COLOR NAME			Clear			Coffee	Dark Brown	Turquoise	Marigold	
	BATCH Lbs.			950			850	250	500	750	
	REMELT Lbs.										
	REMELT TYPE										
	TOTAL Lbs.			950			850	250	500	750	
	MELT TEMP:			2475			2385	2400	2500	2465	
Wed	**Oct 7**			00-96 REV:14			05-96s4 REV:10	34s3 REV:4	52 REV:2	45.11-96s4 REV:30	REBUILD
ALBL:	1 60-355-96-4	80	Marigold Opal, 96.0 4sq.ft.							X	
	2 60-171	45	Cappuccino & Paprika					X	X		
SHEETS	3 Cullet 52	10	Brown Cullet						X		
285	4 61-05-96 IR-4	25	Thin White Irid 96.0				X				
POUNDS	5 60-005-5	15	White & Clear Streaky	X			X				
3250	6 60-005-96-4	90	WhiteClearStreaky fx 96.0 4sq	X			X				
	7 13-5605-96-4	20	White w/black frit & stringers				X				
	8		-								
	12		-								
MELT	TRANSITION			SCRAPE			SCRAPE	COL	COL COL	SCRAPE	
	COLOR NAME			Clear			White	Amber	Brown	Marigold	
	BATCH Lbs.			800			800	500	200	950	
	REMELT Lbs.										
	REMELT TYPE										
	TOTAL Lbs.			800			800	500	200	950	
	MELT TEMP:			2475			2450	2400	2500	2475	
Thu	**Oct 8**			00-96 REV:14			04.5-96s4 REV:2	45.2-96 REV:6	32-96s4 REV:10	45.11-96s4 REV:30	REBUILD
ALBL:	1 60-355-96-4	85	Marigold Opal, 96.0 4sq.ft.							X	
	2 60-782-96-4	40	Olive green FX 96 4sq.ft.						X		
SHEETS	3 60-045-96-4	55	Red Reactive Opal				X				
295	4 60-6120-96-4	90	Grenadine Red & Clear 96.0	X				X			
POUNDS	5 60-612-96-4	25	Grenadine Red 96.0 4sq.ft.					X			
3450	6		-								
	12		-								
MELT	TRANSITION			SCRAPE			COL	SCRAPE	COL COL	COL	
	COLOR NAME			Clear			React Opal	Grenadine	Olive Green	Marigold	
	BATCH Lbs.			850			650	500	500	950	
	REMELT Lbs.										
	REMELT TYPE										
	TOTAL Lbs.			850			650	500	500	950	
	MELT TEMP:			2475			2450	2500	2500	2475	
Fri	**Oct 9**			IDLE			IDLE	IDLE	IDLE	IDLE	REBUILD
ALBL:	1 No Production										
	2		-								
SHEETS	3		-								
0	4		-								
POUNDS	5		-								
0	6		-								
	12		-								
MELT	TRANSITION										
	COLOR NAME										
	BATCH Lbs.										
	REMELT Lbs.										
	REMELT TYPE										
	TOTAL Lbs.			0			0	0	0	0	
	MELT TEMP:			1950			1950	1950	1950	1950	

MELTS SINCE BUILD>>>				520		137	387	441	309	207	485
2015	ITEM	QTY	DESCRIPTION	5	15	3	4	19	21	24	25
Mon	Oct 12			01-96B REV:2			05-96s4 REV:10	45.2-96 REV:8	26 REV:2	46.5s4 REV:1	REBUILD
ALBL:	1	60-01-96-5	80	Water Clear 96.0 for Frit	X						
	2	60-6125-96-4	55	Grenadine Red & White 96.0 4sq.ft.			X	X			
SHEETS	3	60-291	20	Gold-Pink, Lemon Yellow			X			X	
295	4	60-391	100	Yellow, Blue, Red wGreen			X	X	X	X	
POUNDS	5	60-612-96-4	25	Grenadine Red 96.0 4sq.ft.				X			
3600	6	Cullet 46.5	10	Yellow Cullet						X	
	7	Cullet 26	5	Steel Blue					X		
	12		-								
MELT		TRANSITION		SCRAPE			SCRAPE	COL COL COL	COL COL	COL	
		COLOR NAME		Water Clear			White	Grenadine	Steel Blue	Lem Yellow	
		BATCH Lbs.		975			900	525	400	800	
		REMELT Lbs.									
		REMELT TYPE									
		TOTAL Lbs.		975			900	525	400	800	
		MELT TEMP:		2515			2450	2500	2500	2400	
Tue	Oct 13			00-90 REV:14			05-96s4 REV:10	45.12-96s4 REV:19	75-96s4 REV:12	04s4 REV:2	REBUILD
ALBL:	1	50-05	40	White Ripple			X				
	2	60-60	50	Yellow, Orange, w/2 Greens			X	X			
SHEETS	3	60-38	40	Green, Oranges & Pumpkin				X	X	X	
290	4	60-2702-96-4	30	Orange Opal, 96.0 4sq.ft.				X			
POUNDS	5	60-755-96-4	20	Fern Green Opal FX 96.0 4sq.ft.					X		
3575	6	51-00-90-5	20	Clear Granite fx Ripple 5sq.ft	X				50 Lbs.		
	7	65-00-90-5	40	Clear Granite Fusible	X				COLOR		
	8	55-04	50	Cream Drapes w/pink,purple&green					BARS	X	
	12		-								
MELT		TRANSITION		SCRAPE			SCRAPE	COL COL COL	SCRAPE	COL/COE	
		COLOR NAME		Clear			White	Orange Opal	Fern Green	Cream Opal	
		BATCH Lbs.		700			975	500	450	750	
		REMELT Lbs.		200							
		REMELT TYPE		00-90							
		TOTAL Lbs.		900			975	500	450	750	
		MELT TEMP:		2500			2450	2475	2500	2385	
Wed	Oct 14			00-96 REV:14			05m4 REV:3	46.5s4 REV:1	75m4 REV.1	00-90 REV:14	REBUILD
ALBL:	1	00-36	70	Two Yellows on White			X	X			
	2	00-752	40	Verdant Green w/Yellow				X	X		
SHEETS	3	12-200-96-4	15	Clear with white stringer bits 9	X						
261	4	14-406-96-4	10	Clear w/wht&blu frac&blu strin	X						
POUNDS	5	13-5262-96-4	15	Clear w/moss grn frit & stringe	X						
3380	6	13-2602-96-4	10	Clear w/Yellow frit&stringers	X						
	7	11-25-5	6	Clear w/Leaf Green Fracs	X						
	8	12-05-90-5	30	Clear with white stringer bits 90.0						X	
	9	12-604-90-5	15	Clear with red stringer bits 90.0						X	
	10	61-00-90D	50	Thin Clear Fusible 20x20						X	
	12		-								
MELT		TRANSITION		SCRAPE			SCRAPE	SCRAPE	SCRAPE	SCRAPE	
		COLOR NAME		Clear			White	Lem Yellow	Fern Mottle	Clear	
		BATCH Lbs.		800			900	350	450	700	
		REMELT Lbs.								180	
		REMELT TYPE								00-90	
		TOTAL Lbs.		800			900	350	450	880	
		MELT TEMP:		2475			2385	2400	2450	2500	
Thu	Oct 15			31.21-96B REV:2			05m4 REV:3	46,1s3 REV:3	75-96s4 REV:12	05-96s4 REV:10	REBUILD
ALBL:	1	00-05	45	White			X				
	2	00-361	50	Amber & Yellow on White			X	X			
SHEETS	3	51-361	40	Amber & Yellow on White				X		X	
245	4	60-7550-96-4	25	Fern Grn Opal & Clear 96.0 4sq.ft.					X	X	
POUNDS	5	60-755-96-4	35	Fern Green Opal FX 96.0 4sq.ft.					X		
3925	6	B2-707-96	90ea	Billets	X						
	7	CR-707-96	300#	Citron Casting rocks 96 COE	X						
	8	60-707-96-4	50	Citron Fusible, 96.0 4sq.ft.	X						
	12		-								
MELT		TRANSITION		SCRAPE			SCRAPE	COL COL COL	COL COL	SCRAPE	
		COLOR NAME		Citron			White	Goldenrod	Fern Green	White	
		BATCH Lbs.		1200			975	400	500	850	
		REMELT Lbs.									
		REMELT TYPE									
		TOTAL Lbs.		1200			975	400	500	850	
		MELT TEMP:		2525			2385	2400	2500	2450	
Fri	Oct 16			IDLE			IDLE	IDLE	IDLE	IDLE	REBUILD
ALBL:	1	No Production									
	2		-								
SHEETS	3		-								
	12		-								
MELT		TRANSITION									
		COLOR NAME									
		BATCH Lbs.									
		REMELT Lbs.									
		REMELT TYPE									
		TOTAL Lbs.		0			0	0	0	0	
		MELT TEMP:		1950			1950	1950	1950	1950	

2015	ITEM	QTY	DESCRIPTION								
MELTS SINCE BUILD>>>				524		137	391	445	313	211	485
				5	15	3	4	19	21	24	25
				IDLE			IDLE	IDLE	IDLE	IDLE	REBUILD
Mon	**Oct 19**										
ALBL:	1		No Production								
	2		-								
SHEETS	3		-								
0	4		-								
POUNDS	5		-								
0	6		-								
	12		-								
MELT	TRANSITION										
	COLOR NAME										
	BATCH Lbs.										
	REMELT Lbs.										
	REMELT TYPE										
	TOTAL Lbs.			0			0	0	0	0	
	MELT TEMP:			1950			1950	1950	1950	1950	
Tue	**Oct 20**			70.4-96B REV:1			91.2m2 REV:6	92.1 REV:3	27-90 REV:2	67.1-96s4 REV:8	REBUILD
ALBL:	1	60-421-96-4	85	Riviera Blue Opal 96.0 4sq.ft.						X	
	2	20-918	65	Red Amber opal/Pale Amber trans			X	X			
SHEETS	3	Monica Uncats	20	INT UNCATS ON MONICA			X	X		Need 4	
280	4	X70-701-90 KS	40	70-701-90 S.O.					X	Color Bars	
POUNDS	5	61-774-96-4	10	Thin Ming Green FX 96.0 4sc	X						
3775	6	60-774-96-4	60	Ming Green, 96.0 4sq.ft.	X						
	7	CR-774-96	300#	Ming Casting rocks 96 COE	X						
	12		-								
MELT	TRANSITION			COL COL			COL COL COL	SCRAPE	SCRAPE	COL COL	
	COLOR NAME			Ming Green			Rootbeer Mt	Pale Amber	Blue Green	Riviera Blue	
	BATCH Lbs.			1200			800	300	500	975	
	REMELT Lbs.										
	REMELT TYPE										
	TOTAL Lbs.			1200			800	300	500	975	
	MELT TEMP:			2525			2425	2500	2500	2500	
Wed	**Oct 21**			00-96 REV:1			54.0-96s4 REV:3	92.6-96 REV:7	70-96 REV:2	02m4 REV:2	REBUILD
ALBL:	1	00-78	10	Lt Green w/Spring Green						X	
	2	00-74	60	Emerald, Spring, Light Green	From				X	X	
SHEETS	3	61-700-96-4	20	Emerald Grn Thin 96.0 4sq.ft	Premix				X		
270	4	Cullet 70	10	Emerald Grn Cullet					X		
POUNDS	5	60-93-96-4	110	Antique Wht&Amber 96.0 4sq.ft.			X	X			
3425	6	CG Spring	10	Spring Collage Sheets	X						
	7	13-200-96-4	20	Clear w/white frit & stringers	X						
	8	12-200-96-4	10	Clear with white stringer bits	X						
	9	14-05-96-4	10	Clear w/wht frac&black string	X						
	10	14-406-96-4	10	Clear w/wht&blu frac&blu stri	X						
	12		-								
MELT	TRANSITION			SCRAPE			SCRAPE	SCRAPE	SCRAPE	COL	
	COLOR NAME			Clear			Ant. White	Rootbeer	Emerald	Light Green	
	BATCH Lbs.			850			975	350	450	800	
	REMELT Lbs.										
	REMELT TYPE										
	TOTAL Lbs.			850			975	350	450	800	
	MELT TEMP:			2475			2450	2500	2500	2385	
Thu	**Oct 22**			00-90 REV:14			54.0-90s4 REV:14	92.6-90 REV:7	32-96s4 REV:10	65.1-96 REV:7	REBUILD
ALBL:	1	60-782-96-4	35	Olive green FX 96 4sq.ft.					X		
	2	60-330-90-5	20	Antique White Fusible Opal			X				
SHEETS	3	60-935-90-5	70	Antique Wht&Amber 90.0 5sq.ft.			X	X	Need 4		
315	4	60-905-90-5	20	Rootbeer Fusible				X	Color Bars		
POUNDS	5	61-402-96-4	20	Thin Aqua Blue FX 96.0 4sq.ft.						X	
3525	6	61-402-96 IR-4	15	Thin Aqua Blue-IRid 96.0 4sq.ft.						X	
	7	60-402-96 IR-4	45	Aqua Blue FX-IRid, 96.0 4sq.ft.						X	
	8	50-00-90 IR-5	20	Clear Ripple FS-IRid	X						
	9	50-00-90-5	10	Clear Ripple FX 90.0 5sq.ft.	X						
	10	61-00-90D	60	Thin Clear Fusible 20x20	X						
	12		-								
MELT	TRANSITION			SCRAPE			SCRAPE	SCRAPE	COL	SCRAPE	
	COLOR NAME			Clear			Ant. White	Rootbeer	Olive Green	Aqua Blue	
	BATCH Lbs.			650			950	475	450	800	
	REMELT Lbs.			200							
	REMELT TYPE			00-90							
	TOTAL Lbs.			850			950	475	450	800	
	MELT TEMP:			2500			2475	2500	2515	2500	
Fri	**Oct 23**			00-90 REV:14			53s4 REV:6	52 REV:2	74R REV:2	24.2-96B REV:1	REBUILD
ALBL:	1	50-14	65	Lt & Dk Brown & Green			X	X	X		
	2	60-14	20	Light & Dark Brown/Green			X	X	X		
SHEETS	3	65-145	40	Lt&DkBrown&Green,w/Streamer			X	X	X		
260	4	51-00-90D	25	Clear Granite Ripple 20"x20"	X						
POUNDS	5	65-00-90-5	15	Clear Granite Fusible	X						
3425	6	65-00-90 IR-5	15	Clear Granite FS-IRid	X						
	7	60-404-96 IR-4	20	Sapphire FX-IRid, 96.0 4sq.ft.						X	
	8	60-404-96-4	35	Sapphire Fusible, 96.0 4sq.ft.						X	
	9	CR-404-96	150#	Sapphire Casting rocks 96 COE						X	
	10	61-00-90D?	25	#N/A	X						
	12		-								
MELT	TRANSITION			SCRAPE			COL/OX	COL COL	SCRAPE	SCRAPE	
	COLOR NAME			Clear			Ant. White	Brown	Green	Sapphire	
	BATCH Lbs.			700			975	500	330	850	
	REMELT Lbs.								70		
	REMELT TYPE								00-96/11-xx		
	TOTAL Lbs.			700		0	975	500	400	850	
	MELT TEMP:			2475			2385	2500	2500	2515	

	MELTS SINCE BUILD>>>			528		137	395	449	317	215	
2015	ITEM	QTY	DESCRIPTION	5	15	3	4	19	21	24	25
Mon	Oct 26			IDLE			IDLE	IDLE	IDLE	IDLE	HEAT UP
ALBL:	1 No Production										
	2		-								
SHEETS	3		-								
0	4		-								
POUNDS	5		-								
0	6		-								
	7		-								
	12		-								
MELT	TRANSITION										
	COLOR NAME										
	BATCH Lbs.										
	REMELT Lbs.										
	REMELT TYPE										
	TOTAL Lbs.			0			0	0	0	0	
	MELT TEMP:			1950			1950	1950	1950	1950	
Tue	Oct 27			01-90B REV:3			05s4 REV:4	28 REV:3	71 REV:2	75-96s4 REV:12	HEAT UP
ALBL:	1 60-755-96-4	75	Fern Green Opal FX 96.0 4sq.ft.							X	
	2 X52-85 KS-5	50	52-85 Special Order				X	X	X		
SHEETS	3 65-85	50	Blue&SeaGreen wPink&White				X	X	X		
265	4 65-850	30	Blue&SeaGreen,w/3XPink				X	X	X		
POUNDS	5 B-01-90	90ea	Billets	X							
3600	6 CR-01-90	150#	Water Clear Casting rocks 90	X							
	7 61-00-90D	60	Thin Clear Fusible 20x20	X							
	12		-								
MELT	TRANSITION			SCRAPE			SCRAPE	COL	COL	SCRAPE	
	COLOR NAME			Water Clear			White	Blue	Sea Green	Fern Green	
	BATCH Lbs.			1000			900	500	350	850	
	REMELT Lbs.										
	REMELT TYPE										
	TOTAL Lbs.			1000			900	500	350	850	
	MELT TEMP:			2525			2385	2500	2500	2500	
Wed	Oct 28			00-96 REV:14			05m4 REV:3	73.1m4 REV:1	71.0-96s4 REV:3	56-90 REV:3	HEAT UP
ALBL:	1 60-726-96-4	45	Apple Jade Opal Fusible						X		
	2 00-756	55	Blue-Green, Forest & Dk Gree	X			X	X			
SHEETS	3 00-05	45	White				X				
385	4 00-49	20	Gold-Purple and White				X				
POUNDS	5 12-297	60	ClearWhitePinkBlue/ClearStrn	X			X				
3705	6 61-56-90D	100	Thin Black 90.0 20x20							X	
	7 51-56-90D	60	Black Grnt Ripple 90.0 20x20							X	
	12		-								
MELT	TRANSITION			SCRAPE			SCRAPE	SCRAPE	COE	SCRAPE	
	COLOR NAME			Clear			White	Green Blue	Apple Jade	Dark Black	
	BATCH Lbs.			800			975	450	500	820	
	REMELT Lbs.									160	
	REMELT TYPE									56-90	
	TOTAL Lbs.			800			975	450	500	980	
	MELT TEMP:			2475			2385	2400	2500	2550	
Thu	Oct 29			00-96 REV:14			05-96s4 REV:10	24-96 REV:4	71.0-90s5 REV:1	56-90 REV:3	HEAT UP
ALBL:	1 60-726-90-5	35	Apple Jade Opal Fusible						X		
	2 50-29	10	Gold-Pink & White				X				
SHEETS	3 50-05	35	White Ripple				X				
370	4 60-05	10	White				X				
POUNDS	5 60-424-96-4	40	Cobalt Blue 96.0 4sq.ft.					X			
3555	6 60-005-96-4	50	WhiteClearStreaky fx 96.0 4s	X			X				
	7 Monica Uncats	30	#N/A	X			X				
	8 61-56-90D	100	Fusible U-5 Uncats							X	
	9 80-56-90D	60	Black Radium Fusible 20x20							X	
	12		-								
MELT	TRANSITION			SCRAPE			SCRAPE	SCRAPE	COL COL	SCRAPE	
	COLOR NAME			Clear			White	Cobalt Blue	Apple Jade	Dark Black	
	BATCH Lbs.			850			800	475	450	820	
	REMELT Lbs.									160	
	REMELT TYPE									56-90	
	TOTAL Lbs.			850			800	475	450	980	
	MELT TEMP:			2475			2450	2500	2510	2550	
Fri	Oct 30			IDLE REV:			67.1-96s4 REV:8	24-96 REV:4	31.2-90 REV:4	56-90 REV:3	HEAT UP
ALBL:	1 60-421-96-4	80	Riviera Blue Opal 96.0 4sq.ft.				X				
	2 60-703-90-5	35	Lime Fusible						X		
SHEETS	3 61-424-96-4	15	Thin Cobalt Blue FX 96.0 4sq.ft.					X			
320	4 60-424-96-4	30	Cobalt Blue 96.0 4sq.ft.					X			
POUNDS	5 61-56-90D	100	Thin Black 90.0 20x20							X	
2855	6 65-56-90D	60	Black Granite 20x20" 90.0							X	
	12		-								
MELT	TRANSITION						COL COL/COE	COL COL	SCRAPE	SCRAPE	
	COLOR NAME						Riviera Blue	Cobalt Blue	Lime Green	Dark Black	
	BATCH Lbs.						950	475	450	820	
	REMELT Lbs.									160	
	REMELT TYPE									56-90	
	TOTAL Lbs.			0		0	950	475	450	980	
	MELT TEMP:						2500	2500	2510	2550	

2015	ITEM	QTY	DESCRIPTION	532		137	399	453	321	219	
	MELTS SINCE BUILD>>>			5	15	3	4	19	21	24	25
Mon	**Nov 2**			IDLE			IDLE	IDLE	IDLE	IDLE	HEAT UP
ALBL:	1 No Production										
	2		-								
SHEETS	3		-								
0	4		-								
POUNDS	5		-								
0	6		-								
	12		-								
MELT	TRANSITION										
	COLOR NAME										
	BATCH Lbs.										
	REMELT Lbs.										
	REMELT TYPE										
	TOTAL Lbs.			0			0	0	0	0	
	MELT TEMP:			1950			1950	1950	1950	1950	
Tue	**Nov 3**			31.21-96B REV:4			00-90 REV:14	15.1-90 REV:4	31.2-96 REV:2	56-90 REV:3	05-96s8 REV:
ALBL:	1 60-501-90-5	30	Plum Fusible					X			
	2 61-7312-96-4	10	Thin Lime Green 96.0 4sq.ft.						X		
SHEETS	3 60-7312-96-4	30	Lime Green 96.0 4 sq.ft.						X		For
425	4 60-707-96-4	110	Citron Fusible, 96.0 4sq.ft.	X							Frac
POUNDS	5 61-00-90D	65	Thin Clear Fusible 20x20	From			X				
4015	6 65-00-90D	40	Clear Granite 20x20" 90.0	Premix			X				
	7 51-56-90D	75	Black Grnt Ripple 90.0 20x20							X	
	8 61-56-90D	65	Thin Black 90.0 20x20							X	
	12		-								
MELT	TRANSITION			COL			SCRAPE	COL	SCRAPE	SCRAPE/COE	SCRAPE
	COLOR NAME			Citron			Clear	Plum	Lime Green	Dark Black	White
	BATCH Lbs.			1300			600	400	450	820	185
	REMELT Lbs.						100			160	
	REMELT TYPE						00-90			56-90	
	TOTAL Lbs.			1300			700	400	450	980	185
	MELT TEMP:			2525			2500	2500	2500	2550	2400
Wed	**Nov 4**			00-96 REV:14			05-96s4 REV:10	50-96 REV:2	78.2m4 REV:1	56-96 REV:8	53s4 REV:6
ALBL:	1 66-793	55	Many Greens & Cream						X		X
	2 60-5005-96-4	50	Dk Brown&White streaky 96.0 4sq.ft.				X	X			
SHEETS	3 60-5000-96-4	50	Dk Brown&Clear streaky 96.0	X				X			
350	4 Cullet 50	10	Chocolate Cullet					X			
POUNDS	5 60-5605-96-4	70	Black & White 96.0 4sq.ft.				X			X	
3465	6 60-5600-96-4	40	Black & Clear 96.0 4sq.ft.	X						X	
	7 60-56-96 IR-4	20	Black FX-Irid 96.0 4sq.ft.							X	
	8 65-56-96 IR-4	10	Black Granite-IRid 96.0							X	
	9 65-56-96D	45	Black Granite 20x20" 96.0							X	
	12		-								
MELT	TRANSITION			SCRAPE			SCRAPE	COL COL COL	COL COL COL	SCRAPE	SCRAPE
	COLOR NAME			Clear			White	Chocolate	Khaki Green	Dark Black	Ant. White
	BATCH Lbs.			900			950	250	500	700	165
	REMELT Lbs.										
	REMELT TYPE										
	TOTAL Lbs.			900			950	250	500	700	165
	MELT TEMP:			2475			2450	2500	2385	2550	2375
Thu	**Nov 5**			70.4-96B REV:1			05s4 REV:4	53s4 REV:6	06s3 REV:2	56-96 REV:8	25s3 REV:2
ALBL:	1 60-466	70	Sky Blue, White, w/soft Pink				X		X		X
	2 65-05	15	White Granite				X				
SHEETS	3 65-17	30	Light Brown, w/Dark Brown					X			
295	4 60-774-96-4	75	Ming Green, 96.0 4sq.ft.	X							
POUNDS	5 71-56-96D	35	Thin Black fibroid 96.0 20x20								X
3355	6 65-56-96D	15	Black Granite 20x20" 96.0								X
	7 51-56-96-4	15	Black Granite Ripple 96.0 4sf								X
	8 51-56-96D	40	Black Grnt Ripple 96.0 20x20								X
	12		-								
MELT	TRANSITION			COL COL			SCRAPE	scrape	COL	SCRAPE	SCRAPE
	COLOR NAME			Ming Green			White	Ant. White	Lavendar	Dark Blacck	Light Blue
	BATCH Lbs.			975			650	400	300	850	180
	REMELT Lbs.										
	REMELT TYPE										
	TOTAL Lbs.			975			650	400	300	850	180
	MELT TEMP:			2525			2375	2350	2375	2550	2375
Fri	**Nov 6**			70.4-96B REV:1			05s4 REV:4	90 REV:15	65.0 REV:2	56-96 REV:8	23s4 REV:2
ALBL:	1 60-915	20	Golden Amber+Yellow, w/White				X	X			
	2 65-540	55	SkyBlue&White w/Cobalt				X		X		
SHEETS	3 60-96	70	Yellow Blue Red Green/Pink				X	X		350 #	X
305	4 60-774-96-4	75	Ming Green, 96.0 4sq.ft.	X						Premix	
POUNDS	5 51-56-96D	50	Black Grnt Ripple 96.0 20x20							X	
3625	6 60-56-96 SIR-4	35	Black FX-Silver Irid 96.0 4sq.ft.							X	
	12		-								
MELT	TRANSITION			COL COL			SCRAPE	COL COL COL	SCRAPE	SCRAPE	SCRAPE
	COLOR NAME			Ming Green			White	Yell Amber	Lt Cop. Blue	Dark Blacck	Dark Blue
	BATCH Lbs.			975			975	400	225	850	200
	REMELT Lbs.										
	REMELT TYPE										
	TOTAL Lbs.			975		0	975	400	225	850	200
	MELT TEMP:			2525			2385	2500	2500	2550	2360

2015	ITEM	QTY	DESCRIPTION								
	MELTS SINCE BUILD>>>			536		137	403	457	325	223	4
				5	15	3	4	19	21	24	25
Mon	**Nov 9**			IDLE			IDLE	IDLE	IDLE	IDLE	IDLE
ALBL:	1	No Production									
	2		-								
SHEETS	3		-								
0	4		-								
POUNDS	5		-								
0	6		-								
	12		-								
MELT			TRANSITION								
			COLOR NAME								
			BATCH Lbs.								
			REMELT Lbs.								
			REMELT TYPE								
			TOTAL Lbs.	0			0	0	0	0	0
			MELT TEMP:	1950			1950	1950	1950	1950	1950
Tue	**Nov 10**			31.21-96B REV:4			00-96 REV:14	54m4 REV:2	67.2m3 REV:2	56-96 REV:8	23m4 REV:1
ALBL:	1	00-33	35 Honey-Amber					X			
	2	00-43	45 Light Blue and Violet Blue						X		X
SHEETS	3	60-707-96-4	110 Citron Fusible, 96.0 4sq.ft.	X				Need 4			
370	4	60-00-96-5	40 Clear FX 96.0 5sq.ft For Frit.				X	Color Bars			
POUNDS	5	65-00-96D	50 Clear Granite FX 96.0 20x20				X				
4150	6	51-56-96D	60 Black Grnt Ripple 96.0 20x20							X	
	7	60-56-96-5	30 For Frit								
	12		-								
MELT			TRANSITION	COL COL			SCRAPE	COL	COL COL	SCRAPE	COL
			COLOR NAME	Citron			Clear	Bone Moll	Light Blue	Dark Black	Dark Blue
			BATCH Lbs.	1300			850	450	400	950	200
			REMELT Lbs.								
			REMELT TYPE								
			TOTAL Lbs.	1300			850	450	400	950	200
			MELT TEMP:	2525			2475	2375	2385	2550	2360
Wed	**Nov 11**			00-96 REV:14			01-96B REV:2	46s4 REV:2	05m4 REV:3	56-96 REV:8	62 REV:7
ALBL:	1	00-21	45 Red & Yellow on White					X	X		X
	2	00-36	15 Two Yellows on White					X	X		
SHEETS	3	13-5333-96-4	50 Clear w/Aqua frit & stringers	X							Need 4
320	4	13-200-96-4	15 Clear w/white frit & stringers	X							Color Bars
POUNDS	5	12-200-96-4	15 Clear with white stringer bits	X							
3855	6	60-01-96-5	70 Water Clear 96.0 for Frit				X				
	7	CR-01-96	150# Water Clear Casting rocks 96 COE				X				
	8	51-56-96D	25 Black Grnt Ripple 96.0 20x20							X	
	9	65-56-96D	25 Black Granite 20x20" 96.0							X	
	10	80-56-96D	60 Black Radium 96.0 20x20							X	
	12		-								
MELT			TRANSITION	SCRAPE			SCRAPE	SCRAPE	SCRAPE	SCRAPE	COL
			COLOR NAME	Clear			Water Clear	Yell. Opal	White	Dark Black	Dk Ruby Rd
			BATCH Lbs.	975			1000	300	500	800	120
			REMELT Lbs.							160	
			REMELT TYPE							56-96	
			TOTAL Lbs.	975			1000	300	500	960	120
			MELT TEMP:	2475			2515	2375	2385	2550	2450
Thu	**Nov 12**			00-96 REV:14			00-90 REV:14	45.12-90s4 REV:14	05-90s5 REV:1	56-96 REV:8	50-90 REV:1
ALBL:	1	60-6085-90-5	25 Orange opal on white 90.0 5 sq.ft.					X	X		
	2	60-5105-90-5	25 Dk Brown&White streaky 90.0 5sq.ft.						X		X
SHEETS	3	60-6080-90-5	30 Orange opal on clear 90.0 5 sq.ft.				X	X			
380	4	60-605-90-5	25 Orange Opal Fusible 90.0					X			
POUNDS	5	61-00-90D	25 Thin Clear Fusible 20x20				X				
3670	6	60-00-90-5	40 Clear Fusible 90.0 5sq.ft.				X				
	7	61-00-96D	45 Thin Clear 96.0 20X20	X							
	8	61-00-96-4	15 Thin Clear 96.0 4sq.ft.	X							
	9	60-00-96-4	20 Clear Fusible 96.0 4sq.ft.	X							
	10	70-00-96-4	20 Clear Fibroid 96.0 4sq.ft.	X							
	11	71-56-96D	20 Thin Black fibroid 96.0 20x20							X	
	12	70-56-96D	90 Black Fibroid 96.0 20x20							X	
MELT			TRANSITION	SCRAPE			SCRAPE	SCRAPE	SCRAPE	SCRAPE	SCRAPE
			COLOR NAME	Clear			Clear	Orange	White	Dark Black	Chocolate
			BATCH Lbs.	850			700	500	500	700	100
			REMELT Lbs.				160			160	
			REMELT TYPE				00-90			56-96	
			TOTAL Lbs.	850			860	500	500	860	100
			MELT TEMP:	2475			2500	2475	2475	2550	2500
Fri	**Nov 13**			00-96 REV:14			3-96s4 REV:9	45.3-90s4 REV:9	52.05-90 REV:4	56-96 REV:8	30R REV:2
ALBL:	1	60-604-90-5	40 Red Opal Fusible					X			
	2	60-070-96-4	80 Cloud Opal fusible 4 sq.ft.				X				
SHEETS	3	60-530-90-5	35 Sesame Fusible						X		
330	4	13-5333-96-4	20 Clear w/Aqua frit & stringers	X							
POUNDS	5	11-38-5	60 Clear w/OrangeRedYellowFra	X							streamer
4125	6	Cullet 30	10 Dark Green Cullet								X
	7	60-56-96 GIR-4	50 Black FX-Gold Irid 96.0 4sq.ft.							X	
	8	51-56-96D	35 Black Grnt Ripple 96.0 20x20							X	
	12		-								
MELT			TRANSITION	SCRAPE			COL COL	SCRAPE	COL	Good Scrape	SCRAPE
			COLOR NAME	Clear			Cloud Opal	Red Opal	Sesame	Dark Black	Dark Green
			BATCH Lbs.	1200			950	500	450	850	145
			REMELT Lbs.								30
			REMELT TYPE								11-xx/00-96
			TOTAL Lbs.	1200		0	950	500	450	850	175
			MELT TEMP:	2475			2485	2475	2500	2550	2525

2015	ITEM	QTY	DESCRIPTION								
	MELTS SINCE BUILD>>>			540		137	407	461	329	227	8
				5	15	3	4	19	21	24	25
Mon	**Nov 16**			IDLE			IDLE	IDLE	IDLE	IDLE	30
ALBL:	1 RA-FRC 30	40#+									
	2		-								
SHEETS	3		-								For Frac
0	4		-								Dana to
POUNDS	5		-								Charge
85	6		-								at 5:00
	12		-								
MELT	TRANSITION										Good Scrape
	COLOR NAME										Dark Green
	BATCH Lbs.										
	REMELT Lbs.										85
	REMELT TYPE										30 Cullet
	TOTAL Lbs.			0			0	0	0	0	85
	MELT TEMP:			1950			1950	1950	1950	1950	2400
Tue	**Nov 17**			00-96 REV:14			IDLE REV:	45.2-96 REV:6	05s2 REV:2	56-90 REV:3	5R REV:2
ALBL:	1 60-612-96-4	45	Grenadine Red 96.0 4sq.ft.					X			
	2 81-56-90D	30	Black Thin Radium FX 20x20							X	
SHEETS	3 65-56-90D	20	Black Granite 20x20" 90.0							X	For Frac
315	4 51-56-90D	40	Black Grnt Ripple 90.0 20x20							X	
POUNDS	5 11-25-96-5	60	Clear/LeafGreenFracs96.0 5	X							
3515	6 11-51-96-5	30	Clear/GrnBluPurpleFrac96.0	X							
	7 13-56-96-4	35	Clear w/black frit & stringers	X							
	8 55-29	15	White Drapes w/pink						X		
	9 55-05	40	White Drapes						X		
	12		-								
MELT	TRANSITION			SCRAPE				COL	SCRAPE	COL COL COL	COL
	COLOR NAME			Clear				Grenadine	White	Dark Black	Dk Blu Grn
	BATCH Lbs.			1600				500	475	640	115
	REMELT Lbs.									160	25
	REMELT TYPE									56-90	11-xx/00-96
	TOTAL Lbs.			1600			0	500	475	800	140
	MELT TEMP:			2475			1950	2500	2350	2550	2525
Wed	**Nov 18**			01-96B REV:2			00-96 REV:14	45.3-90s4 REV:9	24.1-90 REV:3	32-96s4 REV:10	70-96 REV:2
ALBL:	1 60-782-96-4	60	Olive green FX 96 4sq.ft.							X	
	2 60-604-90-5	40	Red Opal Fusible					X			
SHEETS	3 60-00-96-5	80	Clear FX 96.0 5sq.ft For Frit.	X							streamers
330	4 13-2502-96-4	35	Clear w/red frit & stringers	X							then
POUNDS	5 60-401-90-5	30	Sky Blue Fusible	01 turned					X		frac
3865	6 71-00-96-4	10	Thin Clear Fibroid 96.0 4sq.ft.	into 00-96			X				
	7 70-00-96-4	25	Clear Fibroid 96.0 4sq.ft.	from			X				
	8 65-00-96D	25	Clear Granite FX 96.0 20x20	green			X				
	9 51-00-96D	25	Clear Granite Ripple 96.0 20x20				X				
	12		-								
MELT	TRANSITION			SCRAPE			SCRAPE	COL COL	COL	COL COL	COL COL
	COLOR NAME			Water Clear			Clear	Red Opal	Sky Blue	Olive Green	Emerald
	BATCH Lbs.			1350			750	500	400	700	165
	REMELT Lbs.										
	REMELT TYPE										
	TOTAL Lbs.			1350			750	500	400	700	165
	MELT TEMP:			2525			2450	2475	2500	2500	2500
Thu	**Nov 19**			00-96 REV:14			05m4 REV:3	45.12-96s4 REV:19	05m4 REV:3	73.1m4 REV:1	00-96
ALBL:	1 00-05	30	White						X		
	2 00-756	75	Blue-Green, Forest & Dk Gre	X					X	X	
SHEETS	3 00-60	45	Yellow & Orange w/2 Greens				X	X			To Clean
305	4 60-2702-96-4	35	Orange Opal, 96.0 4sq.ft.					X			Up For
POUNDS	5 11-295-5	60	Clear&White w/White&PinkFr	X					X		25s3
4155	6 12-297	60	ClearWhitePinkBlue/ClearStr	X					X		
	12		-								
MELT	TRANSITION			SCRAPE			SCRAPE	COL	SCRAPE	COL	COL
	COLOR NAME			Clear			White	Orange Opal	White	Green Blue	Clear
	BATCH Lbs.			1400			975	500	500	600	
	REMELT Lbs.										180
	REMELT TYPE										00-96
	TOTAL Lbs.			1400			975	500	500	600	180
	MELT TEMP:			2475			2385	2450	2365	2450	2400
Fri	**Nov 20**			00-96 REV:14			05-96s4 REV:4	31.2-90 REV:4	06s3 REV:2	75-96s4 REV:12	25s3 REV:2
ALBL:	1 61-755-96-4	10	Thin Fern Green FX 96.0 4sq.ft.							X	
	2 60-755-96-4	60	Fern Green Opal FX 96.0 4sq.ft.							X	
SHEETS	3 60-7550-96-4	50	Fern Grn Opal & Clear 96.0 4	X						X	
320	4 60-466	70	Sky Blue, White, w/soft Pink				X		X		X
POUNDS	5 60-703-90-5	35	Lime Fusible					X			
4235	6 60-005-96-4	50	WhiteClearStreaky fx 96.0 4s	X			X				
	7 61-00-96 IR-4	10	Clear Thin Fusible,Irid 96.0	X							
	8 60-00-96 IR-4	20	Clear Fusible-IRid 96.0	X							
	9 58-00-96 IR-4	15	Clear Rad. Ripple Irid 96.0	X							
	12		-								
MELT	TRANSITION			SCRAPE			SCRAPE	COL	TBD	TBD	SCRAPE
	COLOR NAME			Clear			White	Lime	Lavendar	Fern Green	Light Blue
	BATCH Lbs.			1600			800	450	250	950	185
	REMELT Lbs.										
	REMELT TYPE										
	TOTAL Lbs.			1600		0	800	450	250	950	185
	MELT TEMP:			2475			2425	2500	2375	2485	2375

2015	ITEM	QTY	DESCRIPTION								
	MELTS SINCE BUILD>>>			544		137	411	465	333	231	13
				5	15	3	4	19	21	24	25
Mon	**Nov 23**			00-96 REV:14			05s4 REV:4	71 REV:2	67.1-96s4 REV:8	20R REV:3	2335-96
ALBL:	1 52-48	30	Blue, Sea Green, Dk Blue				X	X	X		100 Lbs.
	2 65-48	60	Blue&Green on White,w/Colbalt				X	X	X		Color
SHEETS	3 Uncats	15	Uncats				X	X	X		Bars
242	4 Cullet 20	50	Yellow Green Cullet							X	
POUNDS	5 12-200-96-4	20	Mariner Blue Cullet	X							
3300	6 12-00-96-4	10	Clear with clear stringer bits	X							
	7 14-05-96-4	10	Clear w/wht frac&black string	X							3 charges
	8 Cullet 2335	7	#N/A								50 lbs. ea.
	9 XX-00-96	40	TBD based upon new data	X							X
	10		-								
	11		-								
	12		-								
MELT	TRANSITION			SCRAPE			SCRAPE	SCRAPE	SCRAPE	SCRAPE	COL COL
	COLOR NAME			Clear			White	Sea Green	Riviera Blue	Yell Green	Mariner Blue
	BATCH Lbs.			800			950	300	450	540	
	REMELT Lbs.									110	150
	REMELT TYPE									00-96/11-xx	2335 Trim
	TOTAL Lbs.			800			950	300	450	650	150
	MELT TEMP:			2475			2375	2500	2500	2525	2350
Tue	**Nov 24**			01-96B REV:2			02s4 REV:2	70-96 REV:2	66R REV:2	02s4 REV:2	2806-96
ALBL:	1 60-74	75	Emerald,Spring,Light Green					X		X	100 Lbs.
	2 65-74	40	Emerald,Spring,Light Green				X	X			Color
SHEETS	3 70-70	40	3 Greens, w/Red,Blue,Amber				X		X		Bars
255	4 Cullet 66	15	Dark Blue Cullet						X		3 charges
POUNDS	5 60-01-96-5	80	Water Clear 96.0 for Frit	X							58 lbs. ea.
3825	6 Cullet 2806	5	Charcoal Opal Cullet								X
	7 CR-01-96	300#	Water Clear Casting rocks 96	X							
	12		-								
MELT	TRANSITION			SCRAPE			COL	SCRAPE	SCRAPE	COL	COL COL
	COLOR NAME			Water Clear			Light Green	Emerald	Dark Blue	Light Green	Charcoal
	BATCH Lbs.			1300			800	500	210	800	
	REMELT Lbs.								40		175
	REMELT TYPE								00-96		2806 Trim
	TOTAL Lbs.			1300			800	500	250	800	175
	MELT TEMP:			2515			2385	2500	2500	2385	2350
Wed	**Nov 25**			00-90 REV:14			05s4 REV:4	24-96 REV:4	65R REV:2	15.12 REV:2	00-96 REV:
ALBL:	1 50-542	20	CobaltBlue&VioletClearWhite				X	X	X	X	X
	2 65-542	100	Blues,Clear,White & Purple				X	X	X	X	X
SHEETS	3 12-543	15	BluePurpleCream/ClearStreamers				X		X	X	
260	4 60-54	35	Blue, White w/Purple				X		X		from
POUNDS	5 Cullet 24	5	Cobalt Blue Cullet					X			remelt
4145	6 Cullet 65	5	Regatta Blue Cullet						X		
	7 50-00-90D	60	Clear Ripple FX 90.0 22x20	X							
	8 50-00-90-5	5	Clear Ripple FX 90.0 5sq.ft.	X							
	9 50-00-90 IR-5	15	Clear Ripple FS-IRid	X							
	12		-								
MELT	TRANSITION			SCRAPE			SCRAPE	COL	SCRAPE	SCRAPE	SCRAPE
	COLOR NAME			Clear			White	Cobalt Blue	Regatta	Med. Purple	Clear
	BATCH Lbs.			950			800	450	470	975	
	REMELT Lbs.			240					80		180
	REMELT TYPE			00-90					00-96		00-96
	TOTAL Lbs.			1190			800	450	550	975	180
	MELT TEMP:			2500			2375	2500	2500	2450	2400
Thu	**Nov 26**			H	O	L	I	D	A	Y	!!!
ALBL:	1 Thanksgiving										
	2		-								
SHEETS	3		-								
0	4		-								
POUNDS	5		-								
0	6		-								
	12		-								
MELT	TRANSITION										
	COLOR NAME										
	BATCH Lbs.										
	REMELT Lbs.										
	REMELT TYPE										
	TOTAL Lbs.			0			0	0	0	0	0
	MELT TEMP:			1950			1950	1950	1950	1950	1950
Fri	**Nov 27**			IDLE			IDLE	IDLE	IDLE	IDLE	IDLE
ALBL:	1 No Production										
	2		-								
SHEETS	3		-								
0	4		-								
POUNDS	5		-								
0	6		-								
	12		-								
MELT	TRANSITION										
	COLOR NAME										
	BATCH Lbs.										
	REMELT Lbs.										
	REMELT TYPE										
	TOTAL Lbs.			0			0	0	0	0	0
	MELT TEMP:			1950			1950	1950	1950	1950	1950

	MELTS SINCE BUILD>>>			547		137	414	468	336	234	16
2015	ITEM	QTY	DESCRIPTION	5	15	3	4	19	21	24	25
Mon	Nov 30			31.2-96 REV:2			04s1 REV:2	5R REV:2	26 REV:2	16-96s4 REV:14	50
ALBL:	1 60-520-96-4	80	Plum Opal FX 96.0 4sq.ft.							X	
	2 65-86	45	Blue & Sea Green, w/Fracs				X	X	X		From
SHEETS	3 11-86	60	BlueGreenwPinkFrac,BrownStrmrs				X	X	X	Can use 4	Remelt
277	4 Cullet 5	12	Dark Blue Green Cullet					X	Can use 4	Color Bars	For
POUNDS	5 60-7312-96-4	80	Lime Green 96.0 4 sq.ft.	X					Color Bars		streamers
3605	6		-								
	12		-								
MELT	TRANSITION			COL COL			SCRAPE	COL	COL	COL COL	COL
	COLOR NAME			Lime			Cream Opal	DK Blu Grn	Steel Blue	Plum Opal	Dark Brown
	BATCH Lbs.			975			900	250	450	900	
	REMELT Lbs.							50			80
	REMELT TYPE							11-xx/00-96			50 scrap
	TOTAL Lbs.			975			900	300	450	900	80
	MELT TEMP:			2500			2375	2525	2500	2475	2400
Tue	Dec 1			IDLE			02m4 REV:2	70-96 REV:2	65R REV:2	07.31-96s4 REV:2	24-96 REV:4
ALBL:	1 60-078-96-4	65	Payne's Gray Fusible 96.0							X	
	2 00-74	60	Emerald, Spring, Light Green				X	X			
SHEETS	3 00-485	70	Cobalt Blue & Emerald Green				X	X	X		X
210	4 Uncats	15	Uncats				X	X	X		
POUNDS	5		-								
2825	6		-								
	12		-								
MELT	TRANSITION						COL	SCRAPE	SCRAPE	COL COL	SCRAPE
	COLOR NAME						Light Green	Emerald	Regatta Blu	Payne's Gray	Cobalt Blue
	BATCH Lbs.						975	500	250	850	200
	REMELT Lbs.								50		
	REMELT TYPE								00-96		
	TOTAL Lbs.			0			975	500	300	850	200
	MELT TEMP:			1950			2385	2500	2500	2485	2500
Wed	Dec 2			00-96 REV:14			05-96s4 REV:10	24-96 REV:4	23s3 REV:2	07.4-96s4 REV:5	65R REV:2
ALBL:	1 60-079-96-4	75	Chambray Opal FX 96.0							X	
	2 60-541	95	Blue w/Sky Blue & 2 Purples				X	X	X		X
SHEETS	3 60-4245-96-4	30	Cobalt Blue & White 96.0 4sq.ft.				X	X			
320	4 65-29	20	Gold-Pink & White				X	Add remelt			
POUNDS	5 65-05	10	White Granite				X	as needed			
3875	6 13-5605-96-4	15	White w/black frit & stringers				X	during run			
	7 11-296-5	20	ClearWhitePink wWhite&Pink	X			X				
	8 CG Fall	10	Fall Collage Sheets	X							
	9 12-00-96-4	10	Clear with clear stringer bits	X							
	10 65-00-96 IR-4	15	Clear Granite FS-IRld 96.0	X							
	11 51-00-96D	20	Clear Granite Ripple 96.0 20x	X							
	12		-								
MELT	TRANSITION			SCRAPE			SCRAPE	COL	SCRAPE	COL	COL
	COLOR NAME			Clear			White	Cobalt Blue	Dark Blue	Chambray	Regatta Blu
	BATCH Lbs.			900			975	525	400	850	185
	REMELT Lbs.										40
	REMELT TYPE										00-96
	TOTAL Lbs.			900			975	525	400	850	225
	MELT TEMP:			2475			2450	2500	2365	2485	2500
Thu	Dec 3			IDLE			54m4 REV:2	77-96s4 REV:1	71.1s4 REV:1	76-96s4 REV:3	74s4 REV:3
ALBL:	1 00-33	55	Honey-Amber				X				
	2 50-15	60	EmeraldChartreuse&TurquoiseGrn						X		X
SHEETS	3 60-77-96-4	80	Dark Grn&Oasis Grn 96.0 4sq.ft.				Color	X	Color	X	
195	4		-				Bars		Bars		
POUNDS	5		-								
2500	6		-								
	12		-								
MELT	TRANSITION						SCRAPE	SCRAPE	SCRAPE	SCRAPE	SCRAPE
	COLOR NAME						Bone Mottle	Dark Green	Turquoise	Oasis Green	Midnight Grn
	BATCH Lbs.						600	350	400	950	200
	REMELT Lbs.										
	REMELT TYPE										
	TOTAL Lbs.			0			600	350	400	950	200
	MELT TEMP:			1950			2375	2480	2415	2475	2400
Fri	Dec 4			IDLE			IDLE	IDLE	IDLE	IDLE	IDLE
ALBL:	1 No Production										
	2		-								
SHEETS	3		-								
0	4		-								
POUNDS	5		-								
0	6		-								
	12		-								
MELT	TRANSITION										
	COLOR NAME										
	BATCH Lbs.										
	REMELT Lbs.										
	REMELT TYPE										
	TOTAL Lbs.			0			0	0	0	0	0
	MELT TEMP:			1950			1950	1950	1950	1950	1950

2015	ITEM	QTY	DESCRIPTION	551		137	418	472	340	238	20
MELTS SINCE BUILD>>>				5	15	3	4	19	21	24	25
Mon	**Dec 7**			IDLE			IDLE	IDLE	IDLE	IDLE	IDLE
ALBL:	1	No Production									
	2		-								
SHEETS	3		-								
0	4		-								
POUNDS	5		-								
0	6		-								
	7		-								
	12		-								
MELT			TRANSITION								
			COLOR NAME								
			BATCH Lbs.								
			REMELT Lbs.								
			REMELT TYPE								
			TOTAL Lbs.	0			0	0	0	0	0
			MELT TEMP:	1950			1950	1950	1950	1950	1950
Tue	**Dec 8**			00-96 REV:14			53s4 REV:6	74R REV:3	52R REV:2	75-90s5 REV:8	30R REV:2
ALBL:	1	60-753-90-5 55	Fern Green Opal FX 90.0 5sq.ft.							X	
	2	50-14 30	Lt & Dk Brown & Green				X	X	X		streamers
SHEETS	3	60-14 15	Light & Dark Brown/Green				X	X	X		Cullet
270	4	65-14 40	Light & Dark Brown/Green				X	X	X		Leftover
POUNDS	5	65-145 30	Lt&DkBrown&Green,w/Streamer				X	X	X		
3830	6	Cullet 30 10	Dark Green Cullet								X
	7	11-51-96-5 30	Clear/GrnBluPurpleFrac96.0	X							
	8	11-45-96-4 30	Clear/Green&RedFrac96.0	X							
	9	11-38-5 30	Clear w/OrangeRedYellowFra	X							
	12		-								
MELT			TRANSITION	SCRAPE			COL/OX	COL/COE	COL COL COL	SCRAPE	COL
			COLOR NAME	Clear			Ant. White	Midnight Grn	Brown	Fern Green	Dark Green
			BATCH Lbs.	1200			950	370	270	700	150
			REMELT Lbs.					80	80		30
			REMELT TYPE					11/xx/00-96	U-52 scrap		11-xx/00-96
			TOTAL Lbs.	1200			950	450	350	700	180
			MELT TEMP:	2475			2385	2500	2500	2485	2525
Wed	**Dec 9**			00-96 REV:14			05-100s8 REV:7	70-90R REV:6	31m3 REV:2	75-96s4 REV:12	74R REV:2
ALBL:	1	60-755-96-4 80	Fern Green Opal FX 96.0 4sq.ft.							X	
	2	FL-05-100s8-7 600#	Contrast Lighting White Flake				X				
SHEETS	3	60-700-90-5 15	Emerald Green Fusible					X			
260	4	51-700-90-5 10	Emerald Green Fusible 5 sq.ft.					X			
POUNDS	5	51-700-90 IR-5 15	Emerald Green FS-IRid					X			
3975	6	10-766 50	Dk&Lt Greenw amber,green,red frac						X		X
	7	13-56-96-4 35	Clear w/black frit & stringers	X							
	8	14-05-96-4 20	Clear w/wht frac&black string	X							
	9	14-524-96-4 20	Clear w/wht&lav frac black st	X							
	10	14-406-96-4 15	Clear w/wht&blu frac&blu stri	X							
	11		-								
	12		-								
MELT			TRANSITION	SCRAPE			COE	SCRAPE	COL	SCRAPE	SCRAPE
			COLOR NAME	Clear			White	Emerald	Frog Green	Fern Green	Midnight Grn
			BATCH Lbs.	1200			775	415	400	900	165
			REMELT Lbs.					85			35
			REMELT TYPE					00-90			11-xx/00-96
			TOTAL Lbs.	1200			775	500	400	900	200
			MELT TEMP:	2475			2400	2500	2400	2485	2500
Thu	**Dec 10**			00-96 REV:14			45.12-96s4 REV:19	70-90R REV:6	26.34-90 REV:4	75-96s4 REV:12	30 REV:2
ALBL:	1	60-755-96-4 80	Fern Green Opal FX 96.0 4sq.ft.							X	
	2	60-2702-96-4 85	Orange Opal, 96.0 4sq.ft.				X				
SHEETS	3	60-700-90-5 40	Emerald Green Fusible					X			From U-5
320	4	60-436-90-5 35	Periwinkle Blue Fusible						X		For
POUNDS	5	11-25-96-4 30	Clear/LeafGreenFracs96.0	X							Frac
3905	6	11-45-96-4 30	Clear/Green&RedFrac96.0	X							
	7	11-51-96-4 20	Clear/GreenBluePurpleFrac9	X							
	8		-								
	12		-								
MELT			TRANSITION	SCRAPE			SCRAPE	COL COL	COL	SCRAPE	SCRAPE
			COLOR NAME	Clear			Orange Opal	Emerald	Periwinkle	Fern Green	Dark Green
			BATCH Lbs.	975			950	370	450	900	140
			REMELT Lbs.					80			40
			REMELT TYPE					00-90			55-96
			TOTAL Lbs.	975			950	450	450	900	180
			MELT TEMP:	2475			2475	2500	2500	2485	2525
Fri	**Dec 11**			00-96 REV:14			45-96s4 REV:14	62 REV:7	05m4 REV:3	75-90s5 REV:8	IDLE
ALBL:	1	60-753-90-5 55								X	
	2	60-25 125	Reds, Orange w/White	X			X	X	X		
SHEETS	3	60-602-96-4 25	Flame Opal Fusible 96				X				
255	4	00-20 25	Ruby & Red on White					X	X		
POUNDS	5	61-00-96-4 10	Thin Clear 96.0 4sq.ft.	X							
3475	6	61-00-96D 15	Thin Clear 96.0 20X20	X							
	7		-								
	12		-								
MELT			TRANSITION	SCRAPE			SCRAPE	TBD	SCRAPE	TBD	
			COLOR NAME	Clear			Flame Opal	Dk Ruby Rd	White	Fern Green	
			BATCH Lbs.	975			850	450	500	700	
			REMELT Lbs.								
			REMELT TYPE								
			TOTAL Lbs.	975			850	450	500	700	0
			MELT TEMP:	2475			2475	2450	2375	2485	1950

2015	ITEM	QTY	DESCRIPTION	5	15	3	4	19	21	24	25
MELTS SINCE BUILD>>>				555		137	422	476	344	242	23
Mon	**Dec 14**			IDLE			IDLE	IDLE	IDLE	IDLE	00-96
ALBL:	1	No Production									
	2		-								For
SHEETS	3		-								Color
0	4		-								Bar
POUNDS	5		-								Practice
150	6		-								
	7		-								
	12		-								
MELT	TRANSITION										SCRAPE
	COLOR NAME										Clear
	BATCH Lbs.										
	REMELT Lbs.										150
	REMELT TYPE										00-96
	TOTAL Lbs.			0			0	0	0	0	150
	MELT TEMP:			1950			1950	1950	1950	1950	1950
Tue	**Dec 15**			01-96B REV:2			45.12-96s4 REV:19	15.12 REV:2	05-96s4 REV:10	75-96s4 REV:12	65 REV:
ALBL:	1	60-2702-96-4	85 Orange Opal, 96.0 4sq.ft.				X				
	2	12-543	30 BluePurpleCream/ClearStreamers					X	X		X
SHEETS	3	60-543	20 Violet,Blue,White,Amaretto					X	X		X
250	4	60-7555-96-4	20 Fern Grn Opal & White 96.0 4sq.ft.						X	X	
POUNDS	5	60-755-96-4	75 Fern Green Opal FX 96.0 4sq.ft.							X	
4050	6	B2-01-96	75ea Billets	X							
	7	CR-01-96	600# Water Clear Casting rocks 96	X							
	8	60-01-96-5	20 Water Clear 96.0 for Frit	X							
	12		-								
MELT	TRANSITION			SCRAPE			SCRAPE	COL	SCRAPE	SCRAPE	SCRAPE
	COLOR NAME			Water Clear			Orange Opal	Med. Purple	White	Fern Green	Regatta Blue
	BATCH Lbs.			1200			950	450	400	900	
	REMELT Lbs.										150
	REMELT TYPE										Cullet 65
	TOTAL Lbs.			1200			950	450	400	900	150
	MELT TEMP:			2515			2475	2450	2450	2485	2400
Wed	**Dec 16**			00-96 REV:14			45.12-96s4 REV:19	00-96	92.4-96 REV:6	75-90s5 REV:8	22 REV:2
ALBL:	1	60-753-90-5	55 Fern Green Opal FX 90.0 5sq.ft.							X	
	2	60-2702-96-4	70 Orange Opal, 96.0 4sq.ft.				X	Remelt			
SHEETS	3	60-2700-96-4	70 Orange opal&clear 96.0 4sq.ft	X			X	For			
290	4	60-906-96-4	25 Straw, 96.0 4sq.ft.					Color Bar	X		
POUNDS	5	60-906-96 IR-4	20 Straw-Irid 96.0 4sq.ft.					Training	X		Frac
3535	6	50-00-96 IR-4	20 Clear Ripple-Irid 96.0	X							
	7	80-00-96 IR-4	15 Clear Radium FS-Irid 96.0	X							
	8	80-00-96D	15 Clear Radium 96.0 20x20	X							
	12		-								
MELT	TRANSITION			SCRAPE			SCRAPE		SCRAPE	COL COL	COL
	COLOR NAME			Clear			Orange Opal	Clear	Straw	Fern Green	Dark Blue
	BATCH Lbs.			1200			950		500	700	185
	REMELT Lbs.										
	REMELT TYPE										
	TOTAL Lbs.			1200			950	0	500	700	185
	MELT TEMP:			2475			2475	1950	2600	2485	2500
Thu	**Dec 17**			54.0-90s4 REV:14			45.12-96s4 REV:19	70-96 REV:2	92.6-90 REV:7	02s4 REV:2	66
ALBL:	1	60-2702-96-4	85 Orange Opal, 96.0 4sq.ft.				X				
	2	50-74	35 Emerald, Spring & Lt. Green					X		X	X
SHEETS	3	60-70	50 3 Greens, w/Red,Blue,Amber					X		X	X
335	4	61-700-96-4	25 Emerald Grn Thin 96.0 4sq.ft.					X			From
POUNDS	5	60-935-90-5	120 Antique Wht&Amber 90.0 5sq	X					X		Remelt
2880	6	60-330-90-5	10 Antique White Fusible Opal	X							
	7	60-905-90-5	10 Rootbeer Fusible						X		
	12		-								
MELT	TRANSITION			SCRAPE			SCRAPE	SCRAPE	COL COL	COL COL	COL
	COLOR NAME			1300			Orange Opal	Emerald	Rootbeer	Light Green	Dk Cop Blue
	BATCH Lbs.						950	450	500	900	
	REMELT Lbs.										80
	REMELT TYPE										Cullet 66
	TOTAL Lbs.			0			950	450	500	900	80
	MELT TEMP:			2450			2475	2500	2500	2400	2400
Fri	**Dec 18**			00-96 REV:14			45.31-96s4 REV:	75-96s4 REV:12	53s4 REV:6	05-96s4 REV:10	50-96 REV:2
ALBL:	1	60-2502-96-4	85				X				
	2	60-751	60 Green & Ivory, w/Lt. Brown				using	X	X	X	
SHEETS	3	60-5005-96-4	55 Dk Brown&White streaky 96.0 4sq.ft.				45-96s4			X	X
315	4	65-17	20 Light Brown, w/Dark Brown				Rev 14		X		
POUNDS	5	51-00-96-4	15 Clear Granite Ripple 96.0 4sq.	X			with more		2600		
4050	6	11-51-96-4	20 Clear/GreenBluePurpleFrac96	X			Selenium		SOAK		
	7	13-200-96-4	20 Clear w/white frit & stringers	X					W/00-96		
	8	13-2502-96-4	20 Clear w/red frit & stringers	X					Then 60-281		
	9	14-408-96-4	20 Clear w/wht&blu frac&blu strin	X							
	12		-								
MELT	TRANSITION			SCRAPE			SCRAPE	COL	COL COL	SCRAPE	COL COL COL
	COLOR NAME			Clear			Lt Red Opal	Fern Green	Ant. White	White	Choclate
	BATCH Lbs.			1200			950	400	500	850	150
	REMELT Lbs.										
	REMELT TYPE										
	TOTAL Lbs.			1200			950	400	500	850	150
	MELT TEMP:			2475			2475	2485	2385	2450	2500

	MELTS SINCE BUILD>>>				559		137	426	480	348	246	27
2015	ITEM	QTY	DESCRIPTION		5	15	3	4	19	21	24	25
Mon	**Dec 21**				00-96 REV:14			45.31-96s4 REV:	71 REV:2	100 REV:4	05-96s4 REV:10	65
ALBL:	1 61-2502-96-4	40	Thin Red Opal 96.0 4sq.ft.					X				
	2 60-2502-96-4	60	Light Red Opal, 96.0 4sq.ft.					X				From
SHEETS	3 Cullet 100	35	Gold Pink Cullet					using		X		Remelt
330	4 60-005-96-4	135	WhiteClearStreaky fx 96.0 4s		X			45-96s4			X	
POUNDS	5 65-851	50	LtBlue&SeaGreen,w/Gold-Pink					Rev 14	X			X
3870	6 Uncats	10	Uncats					with more	X		X	X
	7		-					Selenium				
	12		-									
MELT	TRANSITION				SCRAPE			COL	TBD	SCRAPE	SCRAPE	COL COL
	COLOR NAME				Clear			Lt Red Opal	Sea Green	Gold Pink	White	Regatta Blu
	BATCH Lbs.				1200			950	200	400	950	
	REMELT Lbs.									20		150
	REMELT TYPE									100 scrap		Cullet 65
	TOTAL Lbs.				1200			950	200	420	950	150
	MELT TEMP:				2475			2475	2500	2400	2450	2400
Tue	**Dec 22**				00-96 REV:14			45.12-96s4 REV:19	27.0-90 REV:2	102 REV:2	3-96s4 REV:9	24-1-96 REV:1
ALBL:	1 60-070-96-4	65	Cloud Opal fusible 4 sq.ft.								X	
	2 61-1308-96-4	20	Thin Pale Blue 96.0 4sq.ft.									X
SHEETS	3 60-2702-96-4	70	Orange Opal, 96.0 4sq.ft.						X	For		
275	4 60-705-90-5	30	Kelly Green Fusible					X		Frac		
POUNDS	5 60-2700-96-4	15	Orange opal&clear 96.0 4sq.f		X			X				
3710	6 51-00-96-4	15	Clear Granite Ripple 96.0 4sq		X							
	7 51-00-96D	25	Clear Granite Ripple 96.0 20x		X							
	8 11-91-5	30	Cl.w.Ambr,Purp,BluFrac/BrnS		X							
	9 Cullet 102	5	Gold Frac Cullet							X		
	12		-									
MELT	TRANSITION				SCRAPE			SCRAPE	SCRAPE	SCRAPE	COL COL COL	SCRAPE
	COLOR NAME				Clear			Orange Opal	Kelly Green	Gold Frac	Cloud Opal	Pale Blue
	BATCH Lbs.				1200			950	400	220	725	165
	REMELT Lbs.									50		
	REMELT TYPE									102 Misc.		
	TOTAL Lbs.				1200			950	400	270	725	165
	MELT TEMP:				2475			2475	2500	2400	2480	2500
Wed	**Dec 23**				00-96 REV:14			45.12-96s4 REV:19	32-96s4 REV:10	100 REV:4	53s3 REV:6	77s3 REV:3
ALBL:	1 60-782-96-4	30	Olive green FX 96 4sq.ft.						X			
	2 60-2702-96-4	65	Orange Opal, 96.0 4sq.ft.					X				
SHEETS	3 60-2700-96-4	100	Orange opal&clear 96.0 4sq.f		X			X				
285	4 60-285	45	Cream, Gold-Pink, Clear		X					X	X	
POUNDS	5 60-287	15	Cream, Gold-Pink, Forest Green							X	X	X
3635	6 65-287	25	Cream/Gold Pink/Forest Green							X	X	X
	7 Cullet 100	5	Gold Pink Cullet							X		
	12		-									
MELT	TRANSITION				SCRAPE			SCRAPE	COL COL	SCRAPE	SCRAPE	COL COL
	COLOR NAME				Clear			Orange Opal	Olive Green	Gold Pink	Ant. White	Dark Green
	BATCH Lbs.				975			950	400	350	800	150
	REMELT Lbs.									10		
	REMELT TYPE									100 scrap		
	TOTAL Lbs.				975			950	400	360	800	150
	MELT TEMP:				2475			2475	2500	2400	2400	2450
Thu	**Dec 24**				IDLE			IDLE	IDLE	IDLE	IDLE	IDLE
ALBL:	1 Christmas Eve											
	2 No Production											
SHEETS	3		-									
0	4		-									
POUNDS	5		-									
0	6		-									
	12		-									
MELT	TRANSITION											
	COLOR NAME											
	BATCH Lbs.											
	REMELT Lbs.											
	REMELT TYPE											
	TOTAL Lbs.				0			0	0	0	0	0
	MELT TEMP:				1950			1950	1950	1950	1950	1950
Fri	**Dec 25**				IDLE			IDLE	IDLE	IDLE	IDLE	IDLE
ALBL:	1 Christmas											
	2 No Production											
SHEETS	3		-									
0	4		-									
POUNDS	5		-									
0	6		-									
	12		-									
MELT	TRANSITION											
	COLOR NAME											
	BATCH Lbs.											
	REMELT Lbs.											
	REMELT TYPE											
	TOTAL Lbs.				0			0	0	0	0	0
	MELT TEMP:				1950			1950	1950	1950	1950	1950

2015	ITEM	QTY	DESCRIPTION								
	MELTS SINCE BUILD>>>			562		137	429	483	351	249	30
				5	15	3	4	19	21	24	25
Mon	**Dec 28**			54.0-90s4 REV:14			45.37-96s4 REV:2	15.11 REV:2	101 REV:5	92.6-90 REV:7	34.1m3 REV:3
ALBL:	1 Cullet 101	15	Gold Purple Cullet						X		
	2 60-618-96-4	85	Black Cherry 96.0 4sq.ft.				X				
SHEETS	3 60-935-90-5	100	Antique Wht&Amber 90.0 5sq.	X						X	
270	4 60-330-90-5	10	Antique White Fusible Opal	X							
POUNDS	5 60-905-90-5	15	Rootbeer Fusible							X	
3760	6 Uncat Mottles	45	Intentionals					X			X
	7		-								
	12		-								
MELT	TRANSITION			COL/OX			SCRAPE	SCRAPE	COL/COE	COL COL COL	COL
	COLOR NAME			Ant. White			Black Cherry	Violet	Gold Purple	Rootbeer	Dark Brown
	BATCH Lbs.			1300			950	500	200	600	200
	REMELT Lbs.								10		
	REMELT TYPE								101 misc.		
	TOTAL Lbs.			1300			950	500	210	600	200
	MELT TEMP:			2475			2475	2450	2400	2500	2400
Tue	**Dec 29**			00-96 REV:14			45.37-96s4 REV:2	16-96s4 REV:14	24-90 REV:5	05s4 REV:4	62 REV:7
ALBL:	1 60-618-96-4	85	Black Cherry 96.0 4sq.ft.				X				
	2 60-520-96-4	45	Plum Opal FX 96.0 4sq.ft.					X			
SHEETS	3 60-403-90-5	35	Cobalt Blue Fusible						X		
305	4 60-20	30	Ruby & Red on White				looked			X	X
POUNDS	5 60-64	30	Gold-Pink & Red, w/Greens				like			X	X
3845	6 11-91-5	30	Cl.w.Ambr,Purp,BluFrac/BrnSt	X			Lt Limit				
	7 14-406-96-4	20	Clear w/wht&blu frac&blu string	X			615				
	8 12-56-96-4	20	Clear w/black stringer bits	X							
	9 13-2602-96-4	10	Clear w/Yellow frit&stringers	X							
	12		-								
MELT	TRANSITION			SCRAPE			SCRAPE	SCRAPE	SCRAPE	SCRAPE	SCRAPE
	COLOR NAME			Clear			Black Cherry	Plum Opal	Cobalt Blue	White	Dk Ruby Rd
	BATCH Lbs.			975			950	500	500	600	120
	REMELT Lbs.										
	REMELT TYPE										
	TOTAL Lbs.			975			950	500	500	600	120
	MELT TEMP:			2475			2475	2485	2500	2385	2450
Wed	**Dec 30**			65.1-96B REV:14			45.37-96s4 REV:2	16-90s4 REV:1	56-90 REV:3	04.5-96s4 REV:2	5R REV:2
ALBL:	1 60-618-96-4	85	Black Cherry 96.0 4sq.ft.				X				
	2 60-521-90-5	40	Plum Opal FX 90.0 5sq.ft.					X			
SHEETS	3 60-045-96-4	85	Red Reactive Opal							X	For
340	4 81-56-90D	50	Black Thin Radium FX 20x20						X	Some	Frac
POUNDS	5 70-56-90D	20	Black Fibroid FX 90.0 20x20						X	to	
4235	6 61-402-96 IR-4	10	Thin Aqua Blue-IRld 96.0 4sq.f	X						Frit	
	7 60-402-96 IR-4	50	Aqua Blue FX-IRld, 96.0 4sq.ft	X							
	8 CR-402-96	350#	Aqua Casting rocks 96 COE	X							
	12		-								
MELT	TRANSITION			COL COL			SCRAPE	COL COL COL	SCRAPE	SCRAPE	SCRAPE
	COLOR NAME			Clear			Black Cherry	Plum Opal	Dark Black	React. Opal	Dark Green
	BATCH Lbs.			1150			950	500	400	950	155
	REMELT Lbs.								100		30
	REMELT TYPE								56-90		11-xx/00-96
	TOTAL Lbs.			1150			950	500	500	950	185
	MELT TEMP:			2515			2475	2485	2550	2450	
Thu	**Dec 31**			IDLE			IDLE	IDLE	IDLE	IDLE	IDLE
ALBL:	1 New Years Eve										
	2 No Production										
SHEETS	3		-								
0	4		-								
POUNDS	5		-								
0	6		-								
	12		-								
MELT	TRANSITION										
	COLOR NAME										
	BATCH Lbs.										
	REMELT Lbs.										
	REMELT TYPE										
	TOTAL Lbs.			0			0	0	0	0	0
	MELT TEMP:			1950			1950	1950	1950	1950	1950
Fri	**Jan 1**			IDLE			IDLE	IDLE	IDLE	IDLE	IDLE
ALBL:	1 New Years Day										
	2 No Production										
SHEETS	3		-								
0	4		-								
POUNDS	5		-								
0	6		-								
	12		-								
MELT	TRANSITION										
	COLOR NAME										
	BATCH Lbs.										
	REMELT Lbs.										
	REMELT TYPE										
	TOTAL Lbs.			0			0	0	0	0	0
	MELT TEMP:			1950			1950	1950	1950	1950	1950

MELTS SINCE BUILD>>>				565		137	432	486	354	252	33
2015	ITEM	QTY	DESCRIPTION	5	15	3	4	19	21	24	25
Mon	Jan 4			IDLE		HEAT UP	IDLE	IDLE	IDLE	IDLE	IDLE
ALBL:	1	No Production									
	2		-								
SHEETS	3		-								
0	4		-								
POUNDS	5		-								
0	6		-								
	12		-								
MELT			TRANSITION								
			COLOR NAME								
			BATCH Lbs.								
			REMELT Lbs.								
			REMELT TYPE								
			TOTAL Lbs.	0			0	0	0	0	0
			MELT TEMP:	1950			1950	1950	1950	1950	1950
Tue	Jan 5			00-96 REV:14		HEAT UP	45.37-96s4 REV:2	65.12-90 REV:8	56-90 REV:3	00.3-96 REV:6	30R REV:
ALBL:	1	60-618-96-4	85 Black Cherry 96.0 4sq.ft.				X				
	2	60-003-96-4	60 Reactive Tint Clear 96.0							X	
SHEETS	3	60-413-90-5	35 Caribbean Blue Fusible 90.0					X			For
350	4	61-56-90D	50 Thin Black 90.0 20x20						X		streamers
POUNDS	5	60-56-90D	10 Black, 90.0 20x20						X		
4165	6	60-56-90-5	15 Black Fusible 5 sq.ft.						X		
	7	Cullet 30	10 Dark Green Cullet								X
	8	11-29-96-4	60 Clear/Green&PinkFrac96.0	X							
	9	13-56-96-4	15 Clear w/black frit & stringers	X							
	10	13-2602-96-4	10 Clear w/Yellow frit&stringers	X							
	12		-								
MELT			TRANSITION	SCRAPE			SCRAPE	COL COL	SCRAPE	COL	COL
			COLOR NAME	Clear			Black Cherry	Caribbean	Dark Black	Red React	Dark Green
			BATCH Lbs.	1200			950	400	400	700	145
			REMELT Lbs.	240					100		30
			REMELT TYPE	00-96 scrap					56-90		11-xx/00-96
			TOTAL Lbs.	1440			950	400	500	700	175
			MELT TEMP:	2475			2475	2515	2550	2475	2525
Wed	Jan 6			00-96 REV:14		HEAT UP	45.37-96s4 REV:2	65.1-90 REV:7	56-90 REV:3	05-96s4 REV:10	24-96 REV:4
ALBL:	1	60-618-96-4	85 Black Cherry 96.0 4sq.ft.				X				
	2	60-29-96-4	50 White w/Gold Pink, 96.0 4sq.ft.							X	
SHEETS	3	60-4245-96-4	45 Cobalt Blue & White 96.0 4sq.ft.							X	X
380	4	60-402-90-5	30 Aqua Blue Fusible					X			
POUNDS	5	61-56-90D	65 Thin Black 90.0 20x20						X		
4100	6	60-56-90-5	15 Black Fusible 5 sq.ft.						X		
	7	11-51-96-4	30 Clear/GreenBluePurpleFrac9	X							
	8	11-45-96-5	30 Clear/Green&RedFrac96.0 5	X							
	9	11-25-96-5	30 Clear/LeafGreenFracs96.0 5	X							
	12		-								
MELT			TRANSITION	SCRAPE			COL/COE	COL	SCRAPE	SCRAPE	COL
			COLOR NAME	Clear			Black Cherry	Aqua Blue	Dark Black	White	Cobalt Blue
			BATCH Lbs.	1200			950	375	400	950	125
			REMELT Lbs.						100		
			REMELT TYPE						56-90		
			TOTAL Lbs.	1200			950	375	500	950	125
			MELT TEMP:	2475			2475	2525	2550	2450	2500
Thu	Jan 7			00-90 REV:14		HEAT UP	45.2-90 REV:14	24.2-96B REV:1	56-90 REV:3	05-90s5 REV:3	15 REV:2
ALBL:	1	60-05-90-5	50 White Fusible							X	
	2	60-6065-90-5	25 Grenadine Red & White 90.0 5sq.ft.				X			X	from
SHEETS	3	60-606-90-5	60 Grenadine Red Fusible				X				premix
340	4	60-005-90-5	25 WhiteClearStreakyFusible 90	X						X	For
POUNDS	5	60-5615-90-5	5 Black & White 90.0 5sq.ft.						X	X	Frac
4100	6	60-5610-90-5	10 Black & Clear 90.0 5sq.ft.	X					X		
	7	61-56-90D	20 Thin Black 90.0 20x20						X		
	8	60-404-96-4	45 Sapphire Fusible, 96.0 4sq.ft.					X			
	9	50-56-90D	35 Black Ripple 90.0 22x20						X		
	10	50-00-90-5	25 Clear Ripple FX 90.0 5sq.ft.	X							
	11	51-00-90-5	20 Clear Granite fx Ripple 5sq.ft	X							
	12	51-00-90D	20 Clear Granite Ripple 20"x20"	X							
MELT			TRANSITION				COL/COE	COL COL	SCRAPE	SCRAPE	COL
			COLOR NAME	Clear			Grenadine	Sapphire	Dark Black	White	Purple
			BATCH Lbs.	975			950	520	400	975	180
			REMELT Lbs.						100		
			REMELT TYPE						56-90		
			TOTAL Lbs.	975			950	520	500	975	180
			MELT TEMP:	2500			2500	2515	2550	2485	2450
Fri	Jan 8			00-96 REV:14		HEAT UP	45.36-96s4 REV:15	00-96 REV:14	56-90 REV:3	04.5-96s4 REV:2	30 REV:2
ALBL:	1	60-615-96-4	85 Lipstick Red 96.0 4sq.ft.				X				some
	2	60-045-96-4	85 Red Reactive Opal							X	from
SHEETS	3	61-00-96D	50 Thin Clear 96.0 20X20	X							premix
385	4	11-45-96-4	30 Clear/Green&RedFrac96.0					X		400 lbs.	some
POUNDS	5	11-25-96-4	30 Clear/LeafGreenFracs96.0	X						to	from
4090	6	13-2602-96-4	10 Clear w/Yellow frit&stringers	X						Frit	remelt
	7	71-00-96D	20 Thin Clear Fibroid 96.0 20x20	X							For
	8	70-00-96-4	15 Clear Fibroid 96.0 4sq.ft.	X							streamers
	9	57-56-90D	60 Black Fipple 20x20" 90.0						X		
	12		-								
MELT			TRANSITION	SCRAPE			SCRAPE	SCRAPE	SCRAPE	SCRAPE	COL COL COL
			COLOR NAME	Clear			Lipstick	Clear	Dark Black	React Opal	Dark Green
			BATCH Lbs.	1150			950	425	400	950	35
			REMELT Lbs.						100		80
			REMELT TYPE						56-90		cullet 30
			TOTAL Lbs.	1150			950	425	500	950	115
			MELT TEMP:	2475			2475	2475	2550	2450	2450

2015	ITEM	QTY	DESCRIPTION	5	15	3	4	19	21	24	25
MELTS SINCE BUILD>>>				569		137	436	490	358	256	37
Mon	**Jan 11**			IDLE		READY?	IDLE	IDLE	IDLE	IDLE	IDLE
ALBL:	1	No Production									
	2		-								
SHEETS	3		-								
0	4		-								
POUNDS	5		-								
0	6		-								
	12		-								
MELT		TRANSITION									
		COLOR NAME									
		BATCH Lbs.									
		REMELT Lbs.									
		REMELT TYPE									
		TOTAL Lbs.		0			0	0	0	0	0
		MELT TEMP:		1950			1950	1950	1950	1950	1950
Tue	**Jan 12**			00-90 REV:14		READY	45.36-96s4 REV:16	46.5s4 REV:1	56-90 REV:3	05m4 REV:3	70-96 REV:2
ALBL:	1	60-615-96-4	85 Lipstick Red 96.0 4sq.ft.				X				
	2	60-165	50 Green,Brown,Yellow wDkBrown					X			X
SHEETS	3	00-29	20 Gold-Pink & White							X	
385	4	00-05	15 White							X	
POUNDS	5	00-36	35 Two Yellows on White					X		X	
4195	6	65-56-90D	30 Black Granite 20x20" 90.0						X		
	7	51-56-90D	35 Black Grnt Ripple 90.0 20x20						X		
	8	51-00-90D	60 Clear Granite Ripple 20"x20"	X							
	9	51-00-90-5	25 Clear Granite fx Ripple 5sq.ft	X							
	10	65-00-90D	30 Clear Granite 20x20" 90.0	X							
	12		-								
MELT		TRANSITION		SCRAPE		WASH	SCRAPE	SCRAPE	SCRAPE	SCRAPE	SCRAPE
		COLOR NAME		Clear			Lipstick	Lem Yellow	Dark Black	White	Emerald
		BATCH Lbs.		1150			950	500	420	900	175
		REMELT Lbs.							100		
		REMELT TYPE							56-90		
		TOTAL Lbs.		1150			950	500	520	900	175
		MELT TEMP:		2500		2250	2475	2400	2550	2385	2500
Wed	**Jan 13**			00-96 REV:14		00-90 REV:14	45.36-96s4 REV:16	45.12-96s4 REV:19	56-90 REV:3	05-96s4 REV:10	70-96 REV:2
ALBL:	1	60-615-96-4	85 Lipstick Red 96.0 4sq.ft.				X				
	2	60-2705-96-4	75 Orange opal&white 96.0 4sq.ft.					X		X	
SHEETS	3	60-2702-96-4	30 Orange Opal, 96.0 4sq.ft.					X			For
415	4	51-00-90D	90 Clear Granite Ripple 20"x20"			X					Frac
POUNDS	5	51-56-90D	55 Black Grnt Ripple 90.0 20x20						X		
4655	6	11-29-96-4	30 Clear/Green&PinkFrac96.0	X							
	7	11-51-96-4	30 Clear/GreenBluePurpleFrac9	X							
	8	XX-00-96	20 TBD based upon new data	X							
	12		-	Good							
MELT		TRANSITION		SCRAPE		SCRAPE	SCRAPE	SCRAPE	COL COL COL	SCRAPE	SCRAPE
		COLOR NAME		Clear		Clear	Lipstick	Orange Opal	Dark Black	White	Emerald
		BATCH Lbs.		950		750	950	500	420	800	185
		REMELT Lbs.							100		
		REMELT TYPE							56-90		
		TOTAL Lbs.		950		750	950	500	520	800	185
		MELT TEMP:		2475		2500	2475	2465	2550	2450	2500
Thu	**Jan 14**			01-96B REV:2		46.5s4 REV:1	56-96 REV:8	45.2-96 REV:6	26 REV:2	05-96s4 REV:10	75m4 REV:1
ALBL:	1	00-752	25 Verdant Green w/Yellow			X					X
	2	52-62	35 Yellow, Red & Orange			X		X		X	
SHEETS	3	60-391	85 Yellow, Blue, Red wGreen			X		X	X	X	
320	4	60-6125-96-4	45 Grenadine Red & White 96.0 4sq.ft.			Cullet		X		X	
POUNDS	5	60-6120-96-4	25 Grenadine Red & Clear 96.0	X		Leftover		X			
5300	6	60-612-96-4	5 Grenadine Red 96.0 4sq.ft.					X			
	7	81-56-96D	40 Black Thin Radium FX 20x20				X				
	8	80-56-96-4	10 Black Radium 96.0 4 sq.ft.				X				
	9	80-56-96 IR-4	10 Black Radium FS-Irid 96.0				X				
	10	58-56-96 IR-4	25 Black Rad. Ripple Irid 96.0				X				
	11	CR-01-96	750# Water Clear Casting rocks 96	X							
	12	60-01-96-5	15 Water Clear 96.0 for Frit	X							
MELT		TRANSITION		SCRAPE		SCRAPE	SCRAPE	SCRAPE	SCRAPE	SCRAPE	COL
		COLOR NAME		Water Clear		Lem Yellow	Dark Black	Grenadine	Steel Blue	White	Fern Green
		BATCH Lbs.		1600		850	900	450	350	950	200
		REMELT Lbs.									
		REMELT TYPE									
		TOTAL Lbs.		1600		850	900	450	350	950	200
		MELT TEMP:		2515		2425	2550	2500	2500	2450	2475
Fri	**Jan 15**			01-96B REV:2		45.31-96s4 REV:41	56-96 REV:8	45.4-96 REV:1	24-96 REV:2	04.5-96s4 REV:2	IDLE
ALBL:	1	60-045-96-4	85 Red Reactive Opal							X	
	2	60-625-96-4	80 Opal Red & Dk Red 96.0 4sq.ft.			X		X			
SHEETS	3	60-625-5	35 Opal Red w/Dk Red Streaks			X		X			
390	4	60-424-96-4	40 Cobalt Blue 96.0 4sq.ft.	300 lbs.					X	400 lbs.	
POUNDS	5	61-56-96-4	35 Thin Black 96.0 4.0 sq.ft.	heldover			X		For	to	
4700	6	61-56-96 IR-4	15 Black Thin FX-Irid 96.0 4sq.ft.				X		Frit	Frit	
	7	60-56-96 IR-4	25 Black FX-Irid 96.0 4sq.ft.				X				
	8	60-00-96 IR-4	25 Clear Fusible-IRid 96.0	X							
	9	65-56-96 IR-4	30 Black Granite-IRid 96.0				X				
	10	CR-01-96	800# Water Clear Casting rocks 96	X							
	11	60-01-96-5	20 Water Clear 96.0 for Frit	X							
	12		-								
MELT		TRANSITION		SCRAPE		SCRAPE	SCRAPE	COL COL COL	SCRAPE	SCRAPE	
		COLOR NAME		Clear		Lt Red Opal	Dark Black	Dark Red	Cobalt Blue	ReactOpal	
		BATCH Lbs.		1000		950	850	450	500	950	
		REMELT Lbs.									
		REMELT TYPE									
		TOTAL Lbs.		1000		950	850	450	500	950	0
		MELT TEMP:		2515		2475	2550	2500	2500	2450	1950

2015	ITEM	QTY	DESCRIPTION								
	MELTS SINCE BUILD>>>			573		140	440	494	362	260	40
				5	15	3	4	19	21	24	25
Mon	**Jan 18**			01-96B REV:2		45.31-96s4 REV:41	56-96 REV:8	45.12-96s4 REV:19	24.0-90s3 REV:11	05m4 REV:3	20R REV:3
ALBL:	1 00-621	90									
	2 60-2502-96-4	75	Light Red Opal, 96.0 4sq.ft.			X		X		X	
SHEETS	3 60-2702-96-4	25	Orange Opal, 96.0 4sq.ft.			X					
350	4 60-400-90-5	35	Cobalt Blue Opal Fusible					X			For
POUNDS	5 50-00-96 IR-4	20	Clear Ripple-Irid 96.0	X					X		Frac
5180	6 50-56-96 IR-4	25	Black Ripple Irid 96.0				X				
	7 50-56-96D	15	Black Ripple 96.0 22x20				X				
	8 71-56-96D	40	Thin Black fibroid 96.0 20x20				X				
	9 70-56-96-4	10	Black Fibroid 96.0 4 sq.ft.				X				
	10 CR-01-96	900#	Water Clear Casting rocks 96	X							
	12		-								
MELT	TRANSITION			SCRAPE		SCRAPE	SCRAPE	SCRAPE	SCRAPE	SCRAPE	COL
	COLOR NAME			Water Clear		Lt Red Opal	Dark Black	Orange Opal	Cobalt Opal	White	Yell green
	BATCH Lbs.			1450		950	800	500	500	800	150
	REMELT Lbs.										30
	REMELT TYPE										00-96/11-xx
	TOTAL Lbs.			1450		950	800	500	500	800	180
	MELT TEMP:			2515		2475	2550	2465	2475	2385	2525
Tue	**Jan 19**			01-96B REV:2		45.2-90 REV:14	56-96 REV:8	45.12-96s4 REV:19	24-90 REV:5	05-90s5 REV:3	00-96
ALBL:	1 60-2702-96-4	40	Orange Opal, 96.0 4sq.ft.					X			
	2 60-6065-90-5	35	Grenadine Red & White 90.0 5sq.ft.			X				X	
SHEETS	3 51-606-90-5	15	GrenadineRed Granite Ripple FS			X					
310	4 60-606-90-5	40	Grenadine Red Fusible			X					
POUNDS	5 60-4035-90-5	30	Cobalt Blue & White 90.0 5sq.ft.						X	X	streamers
5250	6 60-05-90-5	15	White Fusible							X	
	7 60-403-90-5	30	Cobalt Blue Fusible						X		
	8 60-56-96 SIR-4	25	Black FX-Silver Irid 96.0 4sq.ft.				X				
	9 60-00-96 SIR-4	20	Clear Fusible-Silver Irid 96.0	X							
	10 60-56-96 GIR-4	60	Black FX-Gold Irid 96.0 4sq.ft.				X				
	11 CR-01-96	900#	Water Clear Casting rocks 96	X							
	12		-								
MELT	TRANSITION			SCRAPE		COL	SCRAPE	COL COL	COL	SCRAPE	SCRAPE
	COLOR NAME			Water Clear		Grenadine	Dark Black	Orange Opal	Cobalt Blue	White	Clear
	BATCH Lbs.			1450		850	800	500	500	850	
	REMELT Lbs.						150				150
	REMELT TYPE						56-96				00-96
	TOTAL Lbs.			1450		850	950	500	500	850	150
	MELT TEMP:			2515		2500	2550	2465	2500	2450	2400
Wed	**Jan 20**			01-96B REV:2		45.3-90s4 REV:9	56-96 REV:8	45.12-96s4 REV:19	66.2-90s5 REV:3	05-96s4 REV:10	05-96s8 REV:4
ALBL:	1 60-604-90-5	75	Red Opal Fusible			X					
	2 60-408-90-5	35	Cornflower Blue Opal Fusible						X		
SHEETS	3 60-2702-96-4	40	Orange Opal, 96.0 4sq.ft.					X			
325	4 60-5605-96-4	85	Black & White 96.0 4sq.ft.				X			X	Bits
POUNDS	5 60-5600-96-4	15	Black & Clear 96.0 4sq.ft.				X				Then
5050	6 50-00-96 IR-4	25	Clear Ripple-Irid 96.0	X							Color
	7 50-56-96 IR-4	15	Black Ripple Irid 96.0								Bar
	8 50-56-96-4	15	Black Ripple 96.0				X				Training
	9 60-56-96-4	20	Black, 96.0 4 sq.ft.				X				
	10 CR-01-96	900#	Water Clear Casting rocks 96	X			X				
	12		-								
MELT	TRANSITION			SCRAPE		SCRAPE	SCRAPE	COL COL	COL COL	SCRAPE	SCRAPE
	COLOR NAME			Water Clear		Red Opal	Dark Black	Orange Opal	Corn Flower	White	White
	BATCH Lbs.			1450		850	850	500	450	850	200
	REMELT Lbs.						100				
	REMELT TYPE						56-96				
	TOTAL Lbs.			1450		850	750	500	450	850	200
	MELT TEMP:			2515		2475	2550	2465	2500	2450	2450
Thu	**Jan 21**			01-96B REV:2		45.31-96s4 REV:41	56-96 REV:8	45.12-96s4 REV:19	07.31-96s4 REV:2	05-100S8 REV:7	45.35-96s7 REV:9
ALBL:	1 60-2502-96-4	85	Light Red Opal, 96.0 4sq.ft.			X					
	2 60-2702-96-4	40	Orange Opal, 96.0 4sq.ft.					X			
SHEETS	3 60-078-96-4	40	Payne's Gray Fusible 96.0						X		For
255	4 FL-05-100s8-7	600#	Contrast Lighting White Flake							X	Frac
POUNDS	5 81-56-96D	35	Black Thin Radium FX 20x20				X				
4730	6 58-00-96-4	10	Clear Radium Ripple 96.0 4s	X							
	7 58-00-96 IR-4	10	Clear Rad. Ripple Irid 96.0	X							
	8 80-56-96 IR-4	25	Black Radium FS-Irid 96.0				X				
	9 58-56-96-4	10	Black Rad. Ripple 96.0 4sq.ft.				X				
	10 CR-01-96	900#	Water Clear Casting rocks 96	X							
	12		-								
MELT	TRANSITION			SCRAPE		SCRAPE	SCRAPE	COL COL	COL/COE	SCRAPE	COL
	COLOR NAME			Water Clear		Lt Red Opal	Dark Black	Orange Opal	Payne's Gray	White Flake	Lt Red Opal
	BATCH Lbs.			1200		950	500	500	500	750	180
	REMELT Lbs.						150				
	REMELT TYPE						56-96				
	TOTAL Lbs.			1200		950	650	500	500	750	180
	MELT TEMP:			2515		2475	2550	2465	2475	2400	2450
Fri	**Jan 22**			01-96B REV:2		45.31-96s4 REV:41	56-96 REV:8	45.12-96s4 REV:19	16-90s4 REV:1	05s4 REV:4	62 REV:7
ALBL:	1 60-2502-96-4	85	Light Red Opal, 96.0 4sq.ft.			X					
	2 60-521-90-5	35	Plum Opal FX 90.0 5sq.ft.						X		
SHEETS	3 60-61	30	Orange & Red, w/2 Greens					X		X	X
300	4 60-60	45	Yellow, Orange, w/2 Greens					X		X	
POUNDS	5 60-2702-96-4	20	Orange Opal, 96.0 4sq.ft.					X			
3560	6 51-00-96-4	20	Clear Granite Ripple 96.0 4sq	X							
	7 51-56-96-4	15	Black Granite Ripple 96.0 4sf				X				
	8 51-56-96D	20	Black Gmt Ripple 96.0 20x20				X				
	9 65-56-96 IR-4	20	Black Granite-IRid 96.0				X				
	10 60-56-96 IR-4	10	Black FX-Irid 96.0 4sq.ft.				X				
	11 CR-01-96	900#	Water Clear Casting rocks 96	X							
	12		-								
MELT	TRANSITION			SCRAPE		SCRAPE	SCRAPE	COL COL	COL/COE	SCRAPE	TBD
	COLOR NAME			WaterClear		Lt Red Opal	Dark Black	Orange Opal	Plum Opal	White	Dk Ruby Rd
	BATCH Lbs.			1400		950	500	500	500	850	
	REMELT Lbs.						180				80
	REMELT TYPE						56-96				Cullet 62
	TOTAL Lbs.					950	680	500	500	850	80
	MELT TEMP:			2515		2475	2550	2465	2475	2385	2400

2015	ITEM	QTY	DESCRIPTION								
	MELTS SINCE BUILD>>>			578		145	445	499	367	265	45
				5	15	3	4	19	21	24	25
Mon	**Jan 25**			01-96B REV:2		611-96 REV:8	56-90 REV:4	46.55-90 REV:3	24-96 REV:2	05-96s4 REV:10	45.35-96s7 REV:9
ALBL:	1 60-29-96-4	25	White w/Gold Pink, 96.0 4sq.ft.							X	
	2 13-5605-96-4	40	White w/black frit & stringers							X	
SHEETS	3 60-357-90-5	30	Lemon Chiffon Fusible					X			3 buckets
420	4 60-611-96-4	70	Light Cherry Red 96.0 4sq.ft.			X					of Bits
POUNDS	5 60-424-96-4	10	Cobalt Blue 96.0 4sq.ft.						X		Then
4960	6 61-611-96-4	25	Thin Lt Cherry FX 96.0 4sq.ft.			X					Frac
	7 61-424-96-4	10	Thin Cobalt Blue FX 96.0 4sq.ft.						X		If
	8 61-424-96 IR-4	25	Thin Cobalt Blue Irid FX 96.0 4sq.ft.						X		Possible
	9 61-56-90D	40	Thin Black 90.0 20x20				X				
	10 60-56-90D	15	Black, 90.0 20x20				X				
	11 60-56-90-5	30	Black Fusible 5 sq.ft.				X				
	12 60-01-96-5	100	Water Clear 96.0 for Frit	X							
MELT	TRANSITION			SCRAPE		SCRAPE	SCRAPE	SCRAPE	TBD	SCRAPE	SCRAPE
	COLOR NAME			Water Clear		Lt Cherry	Dark Black	Lem Chiffon	Cobalt Blue	White	Lt Red Opal
	BATCH Lbs.			1400		950	600	400	400	850	180
	REMELT Lbs.						180				
	REMELT TYPE						56-90				
	TOTAL Lbs.			1400		950	780	400	400	850	180
	MELT TEMP:			2515		2500	2550	2500	2500	2450	2450
Tue	**Jan 26**			00-96 REV:14		45-96s4	56-90 REV:4	45.31-96s4 REV:4	23.6m3 REV:2	05m4 REV:3	45.4-90 REV:4
ALBL:	1 00-29	25	Gold-Pink & White							X	
	2 00-40	45	Steel Blue & Sky Blue						X	X	
SHEETS	3 60-602-96-4	85	Flame Opal Fusible 96			X					
400	4 60-628-90-5	45	Opal Red & Dk Red 90.0 5sq.ft.					X			X
POUNDS	5 60-00-96-5	100	Clear FX 96.0 5sq.ft For Frit.	X		(from					
4700	6 61-56-90D	50	Thin Black 90.0 20x20			45.31-96	X				
	7 57-56-90-5	10	Black Fipple Fusible 5sq.ft.			Rev 41	X				
	8 57-56-90D	40	Black Fipple 20x20" 90.0			formula)	X				
	12		-								
MELT	TRANSITION			SCRAPE		SCRAPE	SCRAPE	COL	COL COL	SCRAPE	SCRAPE
	COLOR NAME			Clear		Flame Opal	Dark Black	Lt Red Opal	Lt Cobalt Mol	White	Dark Red
	BATCH Lbs.			1200		950	650	450	350	850	150
	REMELT Lbs.						100				
	REMELT TYPE						56-90				
	TOTAL Lbs.			1200		950	750	450	350	850	150
	MELT TEMP:			2475		2475	2550	2450	2385	2385	2500
Wed	**Jan 27**			00-96 REV:14		45-96s4	56-90 REV:4	45.5-90 REV:6	05s4 REV:4	92.4-96B REV:5	00-96
ALBL:	1 65-49	30	Gold-Purple and White						X		
	2 60-602-96-4	85	Flame Opal Fusible 96			X					
SHEETS	3 60-610-90-5	40	Light Cherry Red 90.0					X			color
375	4 11-25-96-5	30	Clear/LeafGreenFracs96.0 5s	X		(from					bar
POUNDS	5 11-25-96-4	30	Clear/LeafGreenFracs96.0	X		45.31-96					training
4710	6 12-2502-96-4	35	Clear w/red string bits 96.0	X		Rev 41					
	7 61-56-90D	80	Thin Black 90.0 20x20			formula)	X				
	8 60-906-96-4	15	Straw, 96.0 4sq.ft.							X	
	9 60-906-96 IR-4	30	Straw-Irid 96.0 4sq.ft.							X	
	10 CR-906-96	150#	Straw Casting rocks 96 COE							X	
	12		-								
MELT	TRANSITION			SCRAPE		SCRAPE	SCRAPE	COL/COE	SCRAPE	COL/OX	SCRAPE
	COLOR NAME			Clear		Flame Opal	Dark Black	Light Cherry	White	Straw	
	BATCH Lbs.			1400		950	500	500	400	800	
	REMELT Lbs.										160
	REMELT TYPE										00-96/11-xx
	TOTAL Lbs.			1400		950	500	500	400	800	160
	MELT TEMP:			2475		2475	2550	2600	2375	2500	2400
Thu	**Jan 28**			24.2-96B REV:		45-96s4	56-90 REV:4	45.12-96s4 REV:19	05m4 REV:3	IDLE	62
ALBL:	1 00-61	50	Orange & Red w/2 Greens					X	X		X
	2 60-2702-96-4	30	Orange Opal, 96.0 4sq.ft.					X			
SHEETS	3 61-56-90D	50	Thin Black 90.0 20x20				X				
360	4 60-602-96-4	85	Flame Opal Fusible 96			X					
POUNDS	5 60-56-90D	40	Black, 90.0 20x20				X				
4070	6 60-56-90 IR-5	15	Black Fusible-Irid			(from	X				
	7 60-404-96 IR-4	15	Sapphire FX-IRid, 96.0 4sq.ft.	X		45.31-96					
	8 60-404-96-4	75	Sapphire Fusible, 96.0 4sq.ft.	X		Rev 41					
	9 CR-404-96	200#	Sapphire Casting rocks 96 CO	X		formula)					
	10		-								
	12		-								
MELT	TRANSITION			COL COL		SCRAPE	SCRAPE	SCRAPE	SCRAPE		SCRAPE
	COLOR NAME			Sapphire		Flame Opal	Dark Black	Orange Opal	White		
	BATCH Lbs.			1300		950	600	500	500		
	REMELT Lbs.						140				80
	REMELT TYPE						56-90				Cullet 62
	TOTAL Lbs.			1300		950	740	500	500	0	80
	MELT TEMP:			2515		2475	2550	2465	2365	1950	2400
Fri	**Jan 29**			IDLE		45-96s4	56-90 REV:4	45.12-96s4 REV:19	05-90s5 REV:3	31.21-96B REV:2	30
ALBL:	1 60-602-96-4	85	Flame Opal Fusible 96			X					
	2 60-2702-96	40	#N/A					X			
SHEETS	3 60-5615-90-5	45	Black & White 90.0 5sq.ft.				X		X		
370	4 61-56-90D	160	Thin Black 90.0 20x20			(from	X				streamers
POUNDS	5 B2-707-96	60ea	Billiats			45.31-96				X	
3710	6 60-707-96 IR-4	40	Citron FX-IRid, 96.0 4sq.ft.			Rev 41				X	
	7		-			formula)					
	12		-								
MELT	TRANSITION					SCRAPE	SCRAPE	COL COL COL	SCRAPE	COL COL	SCRAPE
	COLOR NAME					Flame Opal	Dark Black	Orange Opal	White	Citron	Dark Green
	BATCH Lbs.					950	700	500	500	800	
	REMELT Lbs.						160				100
	REMELT TYPE						56-90				cullet 30
	TOTAL Lbs.			0		950	860	500	500	800	100
	MELT TEMP:			1950		2475	2550	2465	2465	2525	2450

MELTS SINCE BUILD>>>				582		150	450	504	402	269	50
2015	ITEM	QTY	DESCRIPTION	5	15	3	4	19	21	24	25
Mon	**Feb 1**			00-96 REV:14		45-96s4	56-90 REV:4	00-96 REV:14	05-100s8 REV:7	31.2-96 REV:2	56-96 REV:8
ALBL:	1 60-602-96-4	85	Flame Opal Fusible 96			X					
	2 FL-05-100s6-7	250#	Contrast Lighting White Flake						X		"Early"
SHEETS	3 71-56-90D	65	S.O. CBS				X		Roll		overthrow
395	4 70-56-90-5	10	Black Fibroid FX 90.0 5sq.ft.			(from	X		4.5 mm		3+Buckets
POUNDS	5 61-56-90D	40	Thin Black 90.0 20x20			45.31-96	X				
4460	6 61-7312-96-4	10	Thin Lime Green 96.0 4sq.ft.			Rev 41				X	Then
	7 60-7312-96-4	75	Lime Green 96.0 4 sq.ft.			formula)				X	Color Bars
	8 11-25-96-4	30	Clear/LeafGreenFracs96.0					X			
	9 12-56-96-4	80	Clear w/black stringer bits	X							
	12		-								
MELT	TRANSITION			SCRAPE		SCRAPE	SCRAPE	SCRAPE	SCRAPE	COL COL COL	COL COL
	COLOR NAME			Clear		Flame Opal	Dark Black	Clear	White Flake	Lime	Dark Black
	BATCH Lbs.			1000		950	500	400	350	900	200
	REMELT Lbs.						160				
	REMELT TYPE						56-90				
	TOTAL Lbs.			1000		950	660	400	350	900	200
	MELT TEMP:			2475		2475	2550	2475	2400	2500	2550
Tue	**Feb 2**			00-96 REV:14		45-96s4	56-90 REV:4	46.1s3 REV:3	05s4 REV:4	05m4 REV:3	00-96
ALBL:	1 60-602-96-4	85	Flame Opal Fusible 96			X					
	2 65-05	15	White Granite						X		
SHEETS	3 51-361	20	Amber & Yellow on White					X	X		
420	4 00-05	15	White			(from				X	Color
POUNDS	5 00-361	70	Amber & Yellow on White			45.31-96		X		X	Bar
4660	6 61-00-96 IR-4	15	Clear Thin Fusible,Irid 96.0	X		Rev 41					Training
	7 60-00-96 IR-4	15	Clear Fusible-IRid 96.0	X		formula)					
	8 80-56-90 IR-5	20	Black Radium FS-Irid 90.0				X				
	9 65-56-90D	15	Black Granite 20x20" 90.0				X				
	10 51-56-90D	75	Black Grnt Ripple 90.0 20x20				X				
	11 11-51-96-4	30	Clear/GreenBluePurpleFrac96	X							
	12 60-00-96-5	45	Clear FX 96.0 5sq.ft For Frit.	X		coe change					
MELT	TRANSITION			SCRAPE		COL	SCRAPE	COL/COE	SCRAPE	SCRAPE	SCRAPE
	COLOR NAME			Clear		Flame Opal	Dark Black	Goldenrod	White	White	Clear
	BATCH Lbs.			1200		950	500	350	450	850	
	REMELT Lbs.						180				180
	REMELT TYPE						56-90				00-96
	TOTAL Lbs.			1200		950	680	350	450	850	180
	MELT TEMP:			2475		2475	2550	2390	2375	2375	2450
Wed	**Feb 3**			00-96 REV:14		45.11-96s4 REV:30	56-96 REV:8	46.55-90 REV:3	65.5-96B REV:2	3-96s4 REV:9	05-96s4 REV:10
ALBL:	1 60-355-96-4	70	Marigold Opal, 96.0 4sq.ft.			X					
	2 60-070-96-4	70	Cloud Opal fusible 4 sq.ft.							X	
SHEETS	3 60-357-90-5	35	Lemon Chiffon Fusible					X			
345	4 60-5605-96-4	15	Black & White 96.0 4sq.ft.				X				X
POUNDS	5 61-56-96D	25	Thin Black 96.0 20x20				X				
4350	6 57-56-96D	20	Black Fipple 20x20" 96.0				X				
	7 70-56-96D	20	Black Fibroid 96.0 20x20				X				
	8 70-56-96-4	10	Black Fibroid 96.0 4 sq.ft.				X				
	9 CR-455-96	350#	Aquamarine Casting rocks 96 COE						X		
	10 13-5262-96-4	20	Clear w/moss grn frit & stringe	X							
	11 13-2602-96-4	15	Clear w/Yellow frit&stringers	X							
	12 13-56-96-4	45	Clear w/black frit & stringers	X							
MELT	TRANSITION			SCRAPE		SCRAPE	SCRAPE	SCRAPE	COL	COL	SCRAPE
	COLOR NAME			Clear		Marigold	Dark Black	Lem. Chiffon	Aquamarine	Cloud Opal	White
	BATCH Lbs.			1000		800	650	450	450	800	200
	REMELT Lbs.										
	REMELT TYPE										
	TOTAL Lbs.			1000		800	650	450	450	800	200
	MELT TEMP:			2475		2475	2550	2500	2500	2500	2450
Thu	**Feb 4**			00-90 REV:14		45.11-96s4 REV:30	56-96 REV:8	45.11-90s4 REV:5	3.10-96B REV:1	71.0-96s4 REV:3	05-96s8 REV:4
ALBL:	1 60-355-96-4	85	Marigold Opal, 96.0 4sq.ft.			X					
	2 60-726-96-4	85	Apple Jade Opal Fusible							X	For
SHEETS	3 60-351-90-5	40	Marigold Fusible Opal					X			Frac
420	4 61-56-96 IR-4	15	Black Thin FX-Irid 96.0 4sq.ft.				X				
POUNDS	5 71-56-96 IR-4	15	Thin Black fibroid IR 96.0 4sq.ft.				X				
4700	6 50-56-96 IR-4	30	Black Ripple Irid 96.0				X				
	7 CR-077-96	400#	Zinc Casting rocks 96 COE						X		
	8 61-00-90D	75	Thin Clear Fusible 20x20	X							
	9 60-00-90D	75	Clear Fusible 90.0 20x20	X							
	12		-	coe change							
MELT	TRANSITION			SCRAPE		COL COL	SCRAPE	SCRAPE	COL	SCRAPE	SCRAPE
	COLOR NAME			Clear		Marigold	Dark Black	Marigold	Zinc	Apple Jade	Dense White
	BATCH Lbs.			1000		950	600	500	500	950	200
	REMELT Lbs.										
	REMELT TYPE										
	TOTAL Lbs.			1000		950	600	500	500	950	200
	MELT TEMP:			2500		2475	2550	2450	2500	2500	2450
Fri	**Feb 5**			00-96 REV:14		00-96 REV:14	56-96 REV:8	45.11-90s4 REV:5	05-96s4 REV:10	75-96s4 REV:12	05-96s8 REV:4
ALBL:	1 60-351-90-5	35	Marigold Fusible Opal					X			
	2 61-755-96-4	10	Thin Fern Green FX 96.0 4sq.ft.							X	
SHEETS	3 Cullet 755-96	3	Fern Green Opal Cullet							X	overthrow
408	4 60-755-96-4	60	Fern Green Opal FX 96.0 4sq.ft.							X	Cullet
POUNDS	5 60-7550-96-4	60	Fern Grn Opal & Clear 96.0 4	X						X	Leftover
5050	6 60-005-96-4	100	WhiteClearStreaky fx 96.0 4s	X					X		
	7 60-05	20	White						X		
	8 Cullet 05-96s8	10	Dense White FX Cullet								X
	9 60-56-96 GIR-4	50	Black FX-Gold Irid 96.0 4sq.ft.				X				
	10 12/13/14-XX	60	#N/A			X					
	12		-								
MELT	TRANSITION			SCRAPE		SCRAPE	SCRAPE	TBD	SCRAPE	COL COL	SCRAPE
	COLOR NAME			Clear		Clear	Dark Black	Marigold	White	Fern Green	Dense White
	BATCH Lbs.			1500		800	600	500	500	950	200
	REMELT Lbs.										
	REMELT TYPE										
	TOTAL Lbs.			1500		800	600	500	500	950	200
	MELT TEMP:			2475		2475	2550	2450	2475	2475	2450