DE-Feed Rates		Auger Diameter					
		1/2"	3/4"	1"	1-1/4"	1-1/2"	2"
Potentiometer Setting	10	.0.93	0.36	1.17	2.3	4.55	8
	20	0.186	0.72	2.34	4.6	9.11	16.1
	30	0.28	1.08	3.51	6.96	13.66	24.2
	40	0.373	1.44	4.68	9.29	18.22	32.3
	50	0.467	1.8	5.85	11.61	22.77	40.49
	60	0.56	2.16	7.02	13.93	27.33	48.5
	70	0.654	2.53	8.19	16.25	31.89	56.6
	80	0.747	2.89	9.36	18.57	36.44	64.7
	90	0.841	3.25	10.53	20.89	41	72.8
	100	0.934	3.61	11.71	23.22	45.55	80.9
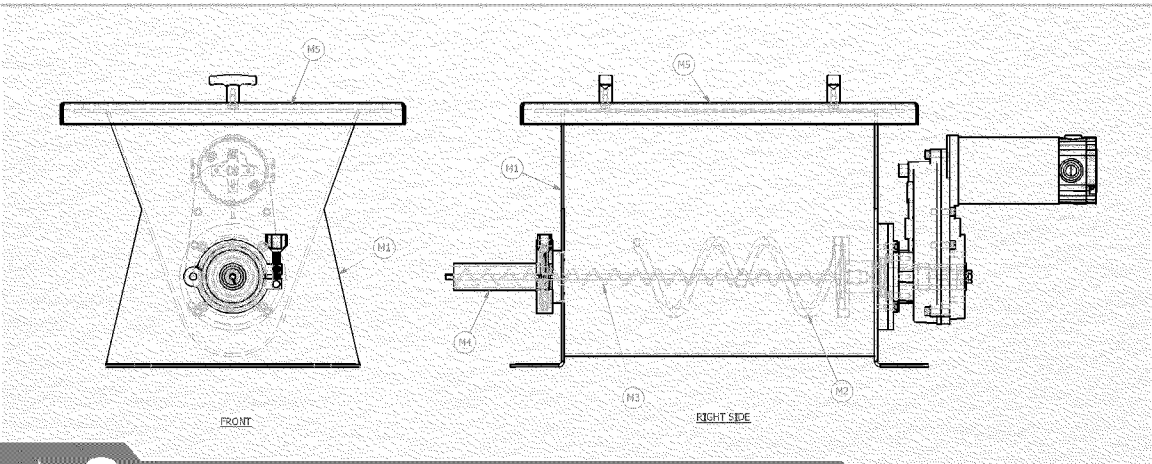
**** Rates based on Product being 89 #/Cu. Ft.****