DURCO QUADRA PRESS FILTERS

BULLETIN EF 21

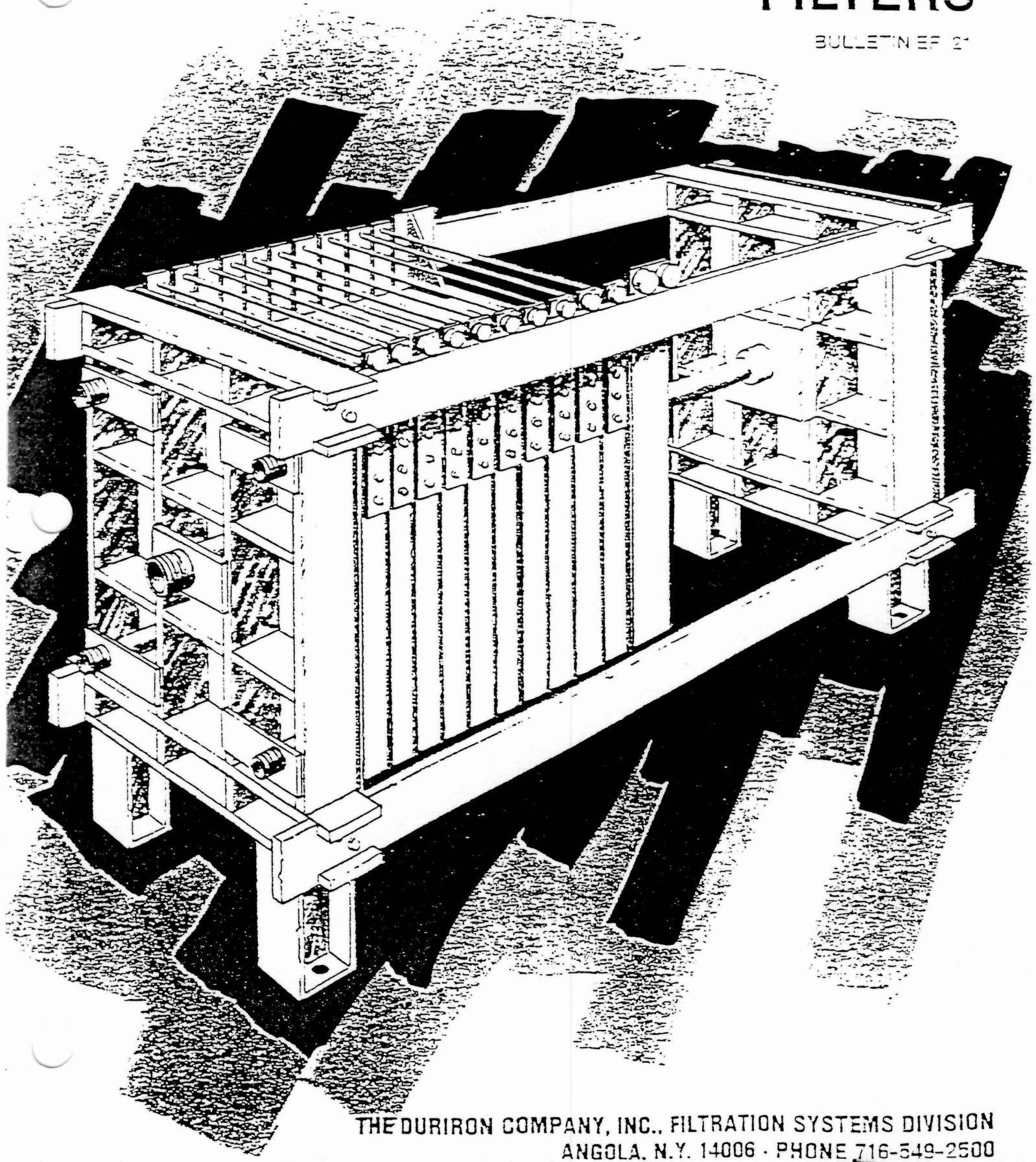

THE DURIRON COMPANY, INC., FILTRATION SYSTEMS DIVISION
ANGOLA, N.Y. 14006 · PHONE 716-549-2500

D 050

QUADRA PRESS FILTER

- Overhead Plate Suspension
- Overhead Plate Transport System
- Double Acting Hydraulic Open/Close System
- Optional Electronically Controlled Plate Transport System
- Compensating Hydraulic Closure for Varying Temperatures and Pressures
- Pushbutton Operation
- No Cast Components—Completely Fabricated
- Clog Free Overhead Shifter—No Springs
- Unique Plate "Lift" Shifter Aids Cake Discharge

Durco QUADRA PRESS filters are designed to provide thorough, efficient filtration of a wide range of solutions. They are high quality products built for low cost operation. Simple in design, they are rugged, versatile, and reliable.

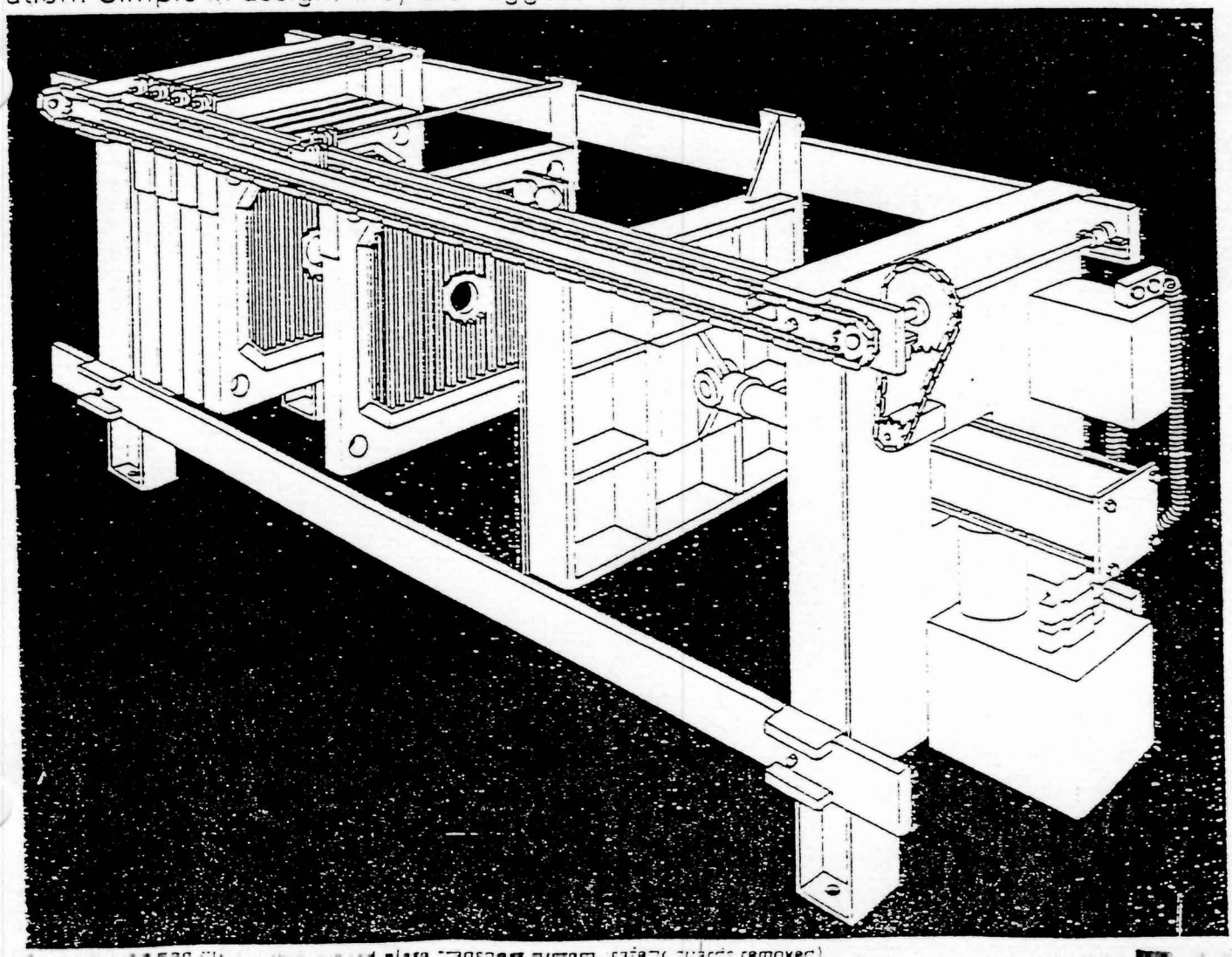

QUADRA PRESS filter with overhead plate transport system (safety guards removed).

ADVANTAGES OF POLYPROPYLENE ELEMENTS

ATTLDOC
129103
07/28/92

To provide superior corrosion resistance, light weight, and high performance, Durco QUADRA PRESS filters are furnished with polypropylene elements in four basic designs.

RECESSED CHAMBERPLATES
(model QP filters)

The plates are built with grooves recessed in both faces. The filter media (fabric bags or filter paper) retain the filtered solids on both faces while permitting the clear filtrate to pass through the media and out the drainage path and port. A latex edging may be applied to the sealing surfaces of the fabric bags to reduce leakage that sometimes occurs through the "wicking" of the cloth. These elements are well applied to mechanized filters since cake is discharged by separating adjacent plates.

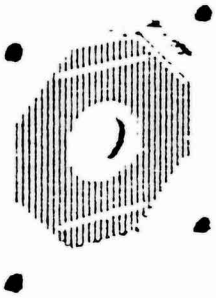

RECESSED CHAMBERPLATES

CAULKED AND GASKETED CHAMBERPLATES
(model QPG filters)

Where leak-free operation is required, the Recessed Chamberplates can be provided with gaskets around the sealing surfaces and ports of each plate. The filter media is caulked into the plate recesses. Cloth wicking is thus eliminated, and leak-free operation assured.

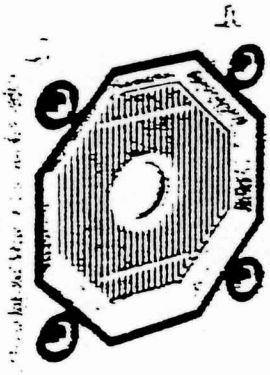

CAULKED & GASKETED RECESSED CHAMBERPLATES

RECESSED MEMBRANE PLATES
(model QPM filters)

These elements are constructed in the same basic fashion as recessed chamberplates. However, the grooved drainage surfaces on both faces of the element are membranes. When pressure is exerted behind these membranes, they flex outwards. This inflation takes place following filtration when the chambers are filled with cakes and while the filter is still sealed. When the membranes inflate, the cakes are "squeezed" to reduce the amount of residual moisture with minimum or zero air blowdown required.

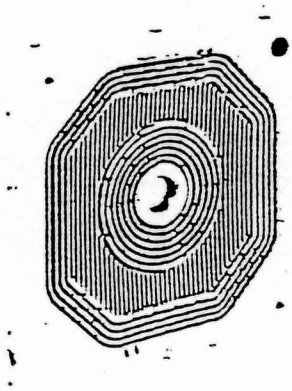

MEMBRANE CHAMBERPLATES

FLUSHPLATES AND FRAMES
(model QPF filters)

For services where cakes greater than 2" thick are regularly formed, the QUADRA PRESS is available with flush plates alternated with hollow frames. The flush plates are equipped with drainage surfaces on both sides, and the filter media is applied to both sides of these flush plates. The hollow frames are built to correspond with the required cake thickness. The solids are retained in the frames, and the filtrate passes through the media and along the drainage surfaces of the flush plates to the outlet port.

D052

FLUSH PLATES & HOLLOW FRAMES

MECHANIZED QUADRA PRESS FILTERS

ATTHJ.DOC
129103
07/28/92

The QUADRA PRESS filter was designed by Durco to make it easier and less expensive for a wide segment of industry to meet process and environmental requirements in solid-liquid separations. Sturdily built for ease of operation, ease of cleaning, and quick turn around, the QUADRA PRESS filter is ideal for waste treatment, dye extraction, vegetable oil processing, precious metal recovery, and many more solid-liquid separation applications.

COMPENSATING HYDRAULIC CLOSURE

A unique, new, double acting, hydraulic closure system is designed to provide fast operation and optimum sealing pressure under wide variations of operating temperatures and pressures. A low pressure, high flow circuit provides quick efficient opening and closing of the head to speed operation and to facilitate cleaning and reduce turn-around time. A high pressure, low flow circuit maintains the sealed system during filtration with minimal energy use.

This compensating hydraulic closure and pressure maintenance system is available with a variety of control arrangements. The system can be operated by pushbutton control at the filter, at a remote location, or by automatic sensing devices which operate the solenoid valves to control operations.

MECHANIZED PLATE TRANSFER SYSTEM

The method of plate transfer designed by Durco for the QUADRA PRESS filter is an extremely dependable, compact system without springs or counterweights. It has positive, over-head action that is non-clogging, simple to operate, and easy to maintain. The system functions hydraulically and is controlled by a pushbutton on semi-automatic filters. The fully mechanized system is controlled mechanically by an interrupted light beam.

The semi-automatic or fully mechanized plate shifter is compact and easily operated. It actually *lifts* the plate during the shifting action. This lifting motion during the cleaning cycle aids cake release. The overhead location of the plate shifting system avoids clogging and fouling of the mechanism that frequently occurs with other, less efficient, side bar plate shifting devices. Variable speed operation permits optimum performance and minimum down time for cake discharge.

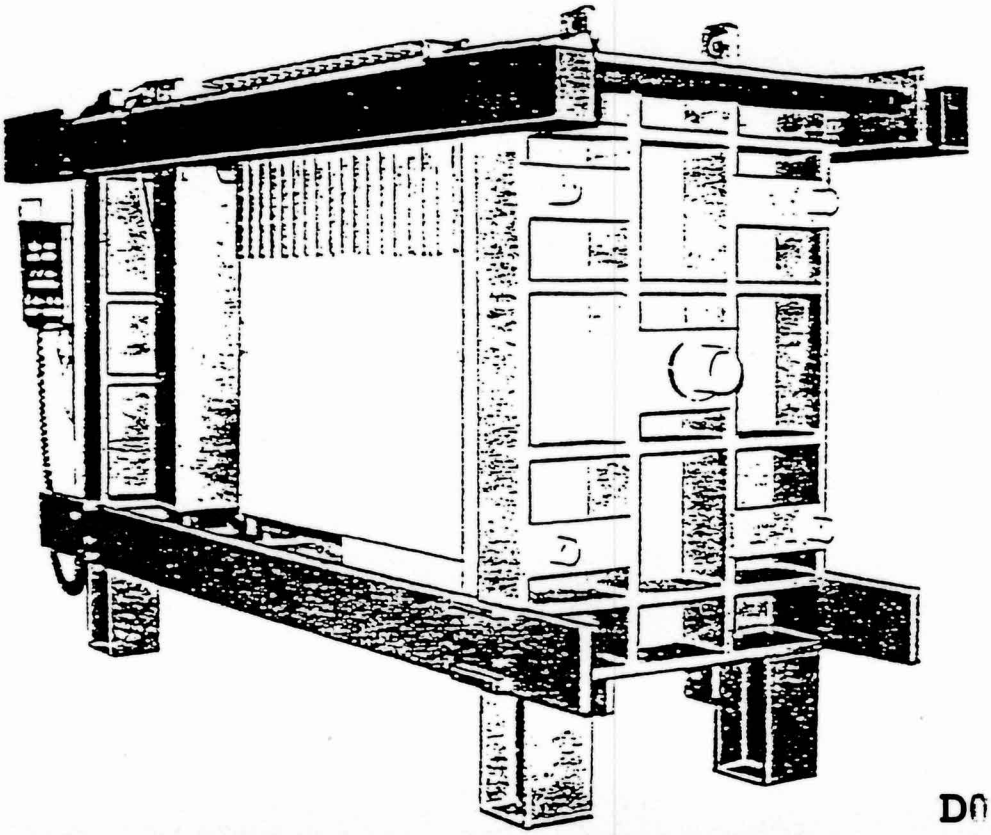

D053

MODEL QP1000/40-17 QUADRA PRESS filter with semi-automatic OVERHEAD plate shifter.

TECHNICAL DATA

ATTHJ.DOC
129103
07/28/92

MODEL IDENTIFICATION

MODEL QP1200/32-10

- Quadra Press
- Number of Chambers (10)
- Plate Size 1200mm x 1200mm (47.24" x 47.24")
- Maximum Cake Thickness 32mm (1.26")

QUICK CONVERSION FACTORS

To obtain inches, multiply mm by 0.03937.
To obtain cubic feet, multiply m^3 by 35.31.
To obtain square feet, multiply m^2 by 10.76.
To obtain pounds, multiply Kilograms by 2.205.

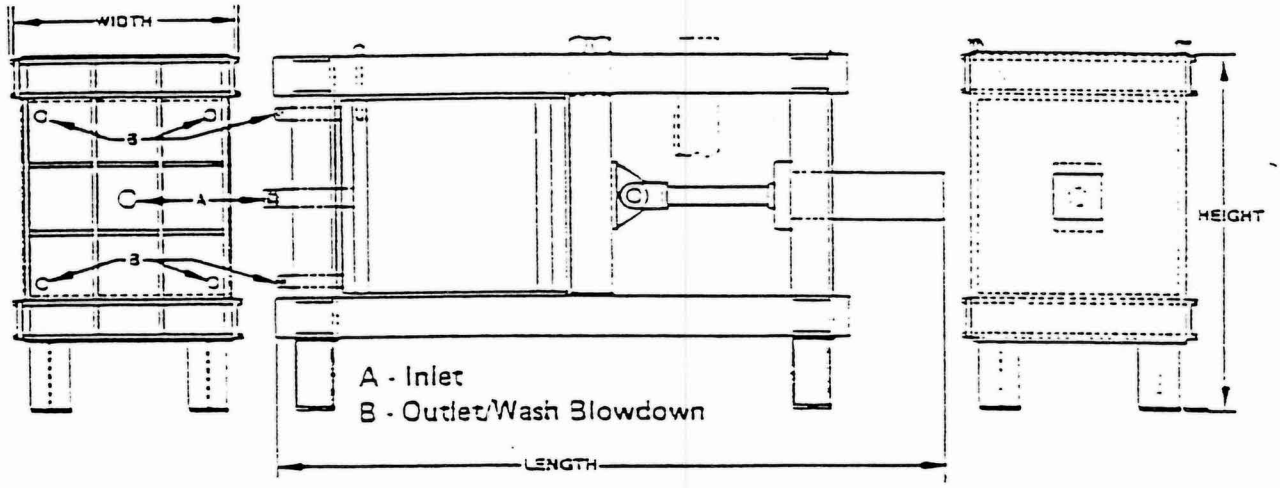

DURCO SERIES 1000 QUADRA PRESS FILTERS

Any number of chambers available.

Number of Chambers - 10

Model No.	QP1000/20-10	/25-10	/32-10	/40-10	/45-10	/50-10
	QP-1000 SERIES					
Cake Thickness						
inches	0.8	1.0	1.3	1.6	1.8	2.0
millimeters	20	25	32	40	45	50
Volume/Chamber						
ft^3	0.519	0.629	0.788	0.961	1.095	1.233
m^3	0.0147	0.0178	0.0223	0.0272	0.0310	0.0349
Area/Chamber						
ft^2	16.1	16.6	17.1	16.3	16.6	17.0
m^2	1.50	1.54	1.59	1.51	1.54	1.58
Total Volume						
ft^3	5.19	6.29	7.88	9.61	10.95	12.33
m^3	0.147	0.178	0.223	0.272	0.310	0.349
Total Area						
ft^2	161	166	171	163	166	170
m^2	15.0	15.4	15.9	15.1	15.4	15.8
Length						
inches	125.0	127.0	129.7	132.4	134.4	136.4
millimeters	3175	3225	3294	3363	3414	3465
Width						
inches	46.4	46.4	46.4	46.4	46.4	46.4
millimeters	1178	1178	1178	1178	1178	1178
Height						
inches	78.5	78.5	78.5	78.5	78.5	78.5
millimeters	1994	1994	1994	1994	1994	1994
Weight						
pounds	7698	7726	7793	7868	7912	7952
kilograms	3495	3512	3538	3572	3592	3610
Additional Length/Chamber						
inches	2.0	2.2	2.5	2.8	3.0	3.1
millimeters	52	57	64	70	75	80
Additional Weight/Chamber						
pounds	100.2	104.0	109.7	117.2	121.6	125.6
kilograms	45.5	47.4	49.8	53.2	55.2	57.0

DURCO SERIES 1200 QUADRA PRESS FILTERS

Any number of chambers available.

Number of Chambers - 30

Model No.	QP1200/20-30	/25-30	/32-30	/40-30	/45-30	/50-30
	QP-1200 SERIES					
Cake Thickness						
inches	0.8	1.0	1.3	1.6	1.8	2.0
millimeters	20	25	32	40	45	50
Volume/Chamber						
ft^3	0.739	0.940	1.226	1.495	1.654	1.855
m^3	0.0209	0.0266	0.0347	0.0423	0.0468	0.0525
Area/Chamber						
ft^2	23.70	24.50	25.49	25.02	23.57	25.15
m^2	2.202	2.276	2.368	2.324	2.190	2.336
Total Volume						
ft^3	22.17	28.20	36.78	44.85	49.62	55.65
m^3	0.627	0.798	1.041	1.269	1.404	1.575
Total Area						
ft^2	711.0	735.0	764.7	750.6	707.1	754.5
m^2	66.06	68.25	71.04	69.72	65.70	70.03
Length						
inches	179.1	185.2	193.9	196.9	202.8	207.9
millimeters	4549	4704	4925	5001	5151	5281
Width						
inches	55	55	55	55	55	55
millimeters	1397	1397	1397	1397	1397	1397
Height						
inches	91	91	91	91	91	91
millimeters	2311	2311	2311	2311	2311	2311
Weight						
pounds	15,335	15,507	15,731	15,348	15,540	15,711
kilograms	6962	7040	7142	6968	7055	7133
Additional Length/Chamber						
inches	2.2	2.4	2.7	2.8	3.0	3.1
millimeters	57	62	69	70	75	80
Additional Weight/Chamber						
pounds	158.1	163.9	171.4	158.6	165.0	170.7
kilograms	71.8	74.4	77.8	72.0	74.9	77.5

COMPLETE FILTRATION CAPABILITY

Filtration Systems Division offers a wide range of filter options to satisfy the demanding requirements of industry. In addition, highly qualified technical experts serve throughout the United States, Canada and Europe to offer design and system guidance to solve unique and difficult separation problems.

Sample analyses and experimental studies are made in our own fully staffed laboratories by qualified technicians. We also offer test units and pilot filters for plant site applications and feasibility studies.

All Durco filters are available as individual units or as fully automated complete filtration stations. Durco engineers and filtration specialists are readily available at start-up to assure satisfactory performance of all units.

Durco horizontal and vertical pressure leaf filters are designed in many sizes to accommodate most types of installations, and are available in a variety of materials, including steel, stainless steel, nickel and titanium along with rubber and plastic linings. The simplicity of design assures easy operation. All Durco Pressure Leaf filters are of rugged construction and comply with the ASME code requirements.

Durco Vertical Tank Filters are available in sluicing or dry cake discharge designs. The Type V sluicing filter is available with a hydro-jet or an oscillating jet sluicer. These filters are totally enclosed. They provide high flow rates with maximum filtrate clarity. Up to 1076 ft^2 ($100m^2$) of screen area in a single unit.

Vertical Tank Type DV Dry Cake discharge filters have quick opening top and bottom covers. Screen areas up to 539 ft^2 ($50m^2$) per unit are available.

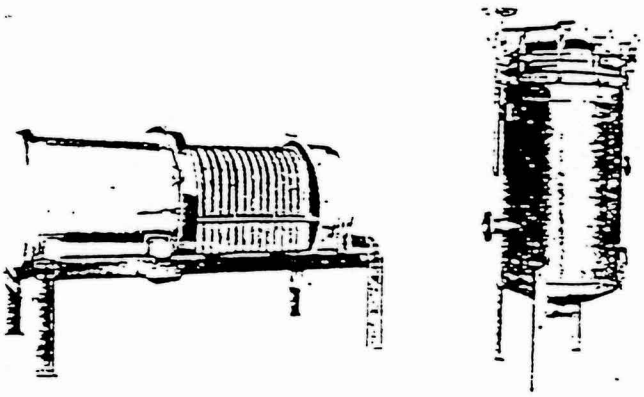

PRESSURE LEAF FILTERS

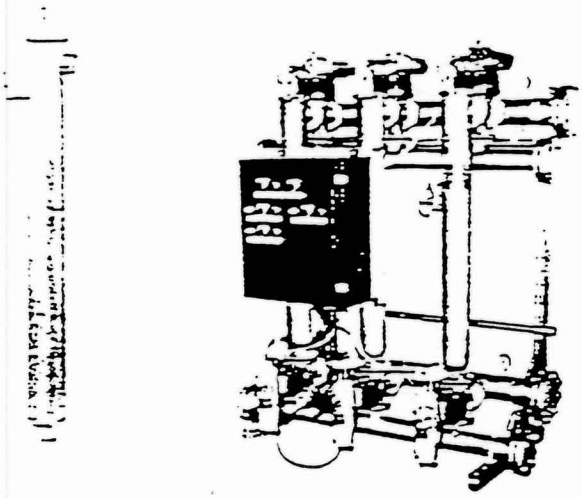

BACKWASHABLE TUBE FILTERS

Horizontal Type HC sluicing filters feature tanks up to 72 in (1829mm) in diameter with all piping to the stationary front head. Tank retraction is quick and easy due to external wheels riding on a sturdy frame support. Type HC filters are available with screen areas up to 1500 ft^2 ($139m^2$).

Horizontal Type DHC dry cake filters are also available in tank sizes up to 72 in (1829mm) diameter. An air driven vibrator shakes the filter leaves to release dry filter cake. Type DHC units range in sizes to 1000 ft^2 ($93m^2$) of screen area with Type DHDC filters available for larger requirements.

Type VH is a horizontal leaf filter that can be sluiced or used on dry cake applications. Standard models have leaf areas to 300 ft^2 ($28m^2$).

Durco nutsches handle large volumes of cake which can be discharged in dry or slurried form. The single horizontal filter element makes cake discharge simple and rapid, provides an efficient washing and drying system, and can handle pressure to 300 psi (2068 kPa).

Durco Tubular Filters feature a durable reusable filter element with a variety of filtering media to meet practically every requirement; capacities from 1 to 3100 gpm (.2 to 704 m^3/h). The quick opening top closure permits easy removal of the filtration equipment without using tools or disconnecting any piping.

Any number of filters may be piped to a single manifold for parallel operation. Existing systems may be easily expanded by merely extending the manifold and adding new units. External backwashing is available with the addition of an auxiliary manifold. Multiple Filter Systems are available completely automated for continuous filtration with no manual operation.

QUADRA PRESS FILTER MANUAL

ALL MODELS

INSTALLATION INSTRUCTIONS

FOUNDATION -

Care should be taken to assure a level and square mounting foundation for the filter press. Anchor bolts at fixed end should be completely tightened, while bolts at ram head end to be "finger tightened".

AIR -

Connect a clean dry air supply to port #2 of ASCO Air Solenoid Valve. The minimum air requirements are 100 SCFM at 50 psi.

IMPORTANT

Air line lubricators are furnished with SC booster pumps. Haskel booster pumps are pre-lubed and require no lubrication other than mentioned in the Haskel service manual.

PIPING -

We recommend the use of flexible couplings between the liner pipes and customer piping.
See drawing (Table of Contents, Item 19) for recommended piping connections.
INSTALLATION OF THE QUADRA PRESS IS NOW COMPLETE.

IMPORTANT

It is not necessary to make any adjustments of relief valves, speed control valves or the air regulator since all valves and controls are preset at the factory. Do not adjust the high pressure relief valve on the hydraulic system since serious injury to operators or damage to the QUADRA PRESS could result. Under no circumstance is the high pressure relief valve to be removed from the hydraulic system.

QUADRA PRESS FILTER MANUAL

ALL MODELS

PREINSTALLATION INSPECTION

1. All shipping straps, blocks, etc., are to be removed. Head, plates and shifter track areas are to be free of foreign matter.

2. Inspect electrical, hydraulic and pneumatic components for damage which may have occurred in handling and shipment.

3. Inspect all plate handle assemblies.

4. Inspect hydraulic system, oil level and fill to height as indicated at sight glass with Enerpac HF-100 or equal hydraulic fluid. DO NOT OVERFILL THE HYDRAULIC SYSTEM. Overfilling will cause permanent damage to the hydraulic system.

   NOTE: Alternate hydraulic fluid is Mobil DTE 24.

IMPORTANT

The hydraulic system must only be filled when the hydraulic cylinder is in the full retract position. DO NOT ADD OIL TO THE HYDRAULIC SYSTEM UNLESS THE MOVABLE HEAD IS IN FULLY RETRACTED POSITION.

5. Inspect all air and plumbing connections. Inspect the air bowl for contamination and clean if required.

IMPORTANT

Customer air supply systems must minimize moisture, which will in time be detrimental to booster pump operation.

QUADRA PRESS FILTER MANUAL

ALL MODELS

UNLOADING INSTRUCTIONS

Unless otherwise specified, the QUADRA PRESS filter is shipped completely assembled. Lifting lugs are provided on the front and rear heads of the unit as noted on assembly drawing in this manual.

IMPORTANT

The lifting lugs provided are the only lift points to be used when unloading the filter press. Attaching lifting devices to any other locations on the unit could result in damage to the filter. Do not connect lifting devices to hydraulic system, hydraulic rams, side bars or to the movable head. Do not unload the filter press with a fork lift under either the lower side bars or the upper side bars or wooden skids or crates. Lift only at the lifting lugs as per assembly drawing.

The lifting load at front and rear of the filter press is not equal. The required loads are as indicated on the assembly drawing. This unequal distribution of load must be taken into account when unloading.

QUADRA PRESS FILTER MANUAL

GENERAL DESCRIPTION

QP - QPG FILTERS

Durco QUADRA PRESS filters are designed for efficient separation of solids from liquids and for fast, simple removal of the filter cakes. Model QP (non-gasketed) and Model QPG filters (gasketed) are supplied with high quality polypropylene filter elements and wetted parts. Figure 1 below illustrates the basic flow pattern and filtration schematic for recessed chamberplate (QP and QPG) QUADRA PRESS filters. When the filter cycle is complete and the chambers completely filled with solids, the feed pump is shut down, the filter is purged with air or gas to further dry the solids, the hydraulic ram is retracted, and each filter element separated individually to allow the cakes between the plates to fall out. When each plate has been separated and all the cakes removed, the ram is extended, the hydraulic closure system is pressurized, and the filter is ready to begin the next cycle.

The QUADRA PRESS is built and designed to provide you with many years of trouble-free and efficient operation. Please read the contents of the manual thoroughly prior to installation and startup.

FIGURE 1

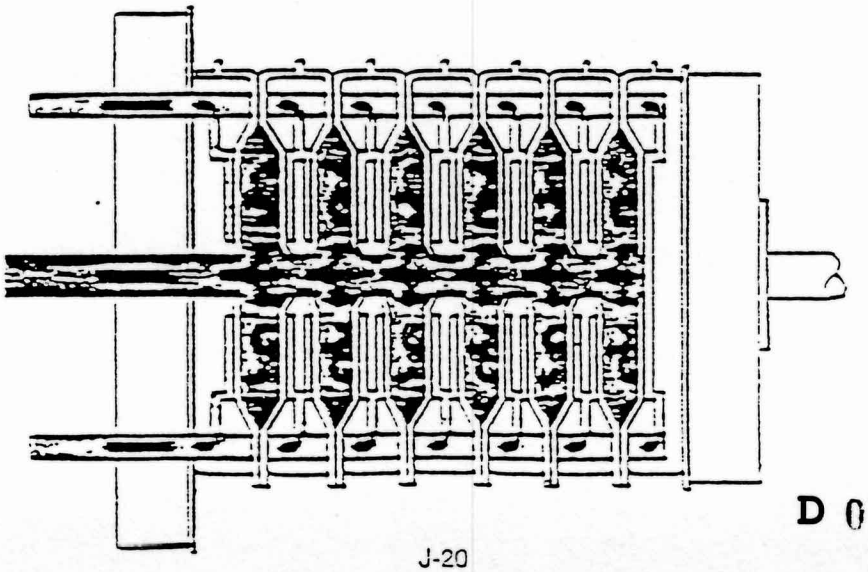

D 059

QUADRA PRESS FILTER MANUAL

ALL MODELS

ELECTRICAL FILTER PRESS INSTALLATION INSTRUCTIONS (1)

After unloading, place the filter on a level mounting surface. Bolt the fixed head end (front) to 3/4" diameter foundation bolts and tighten. Bolt the ram head end (rear) to 3/4" diameter foundation bolts. The foundation bolts at the ram head end (rear) are to be finger tight only since very slight longitudinal deflection will occur during hydraulic system closure.

1. Provide a mechanical ground to the framework of the press.

2. Connect conduit from a 120 volt, 60 hz., 1 phase source to the automated panel.

3. Connect the 120 volt source to the terminals labeled "L" and "N" (all circuits should be de-energized and the control power selector should be in the OFF position).

4. Connect the required conduit and 3 phase voltage through the motor starter and then to the motor.

   NOTE: If motor starter is supplied by Duriron, customer need only to connect 3 phase voltage to the motor starter to complete all motor and control wiring (omit instructions 5 and 6).

5. Run conduit from automated panel to motor starter for control wiring.

6. Enclose 3 #14 AWG (2 hot, 1 neutral) control wires in the conduit. Connect wires "2" and "N" to the motor starter coil and wire "4" to the normally open sealing contact.

7. A copy of the Electrical Schematic is enclosed with this instruction kit to aid in making proper connections.

8. After all connections have been made and double checked for correctness, the system should be ready to be energized and operated.

(1) All conduit and wiring should be in accordance with the National Electrical Code to provide a safe and hazard free installation.

OPERATION (continued) QP and QPG

WARNING

Head Retract - Close air supply valve V8. Keep valve V3 open. Close all other valves.

IMPORTANT

Before retracting movable head, check all pressure gauges at the fixed head end of the filter press. All pressure gauges must read 0 psi. Do not open filter press (retract head) unless the pressure at all inlet and outlet connections of the filter press is zero.

WARNING

Serious injury or death will result when retracting ram if operator or any personnel place arms, legs or the entire body in the path of the movable head while the movable head is retracting. The hydraulic system of the filter press is capable of producing forces in excess of that required to produce bodily injury or death. Use extreme caution while depressing Retract Ram pushbutton. Inspect both sides of the filter press as well as the area between the movable head and the ram head for any personnel. Do not depress the Retract Ram pushbutton if personnel are at or near this area as serious injury or death will result.

To retract movable head (open the press), simultaneously depress the Start Hydraulic Pump pushbutton and the Retract Ram pushbutton. Continue to depress both pushbuttons until the movable head is fully retracted. The Head Retracted light will indicate the fully retracted position.

D 061

QP (G-27095-A)
QPG (G-27777-A) QUADRA PRESS FILTER MANUAL

OPERATION (continued)

QP and QPG

Prefill/Air Purge - Open V1, V4, V5 and turn on the sludge feed pump. Air will be expelled from the chambers as the chambers are filled with sludge. Continue to purge the system of air until no air is present at the filtered liquid outlet of the filter. The time for prefill/air purge is dependent on the feed rate and the chamber volume.

Filter - Open valves V2 and V3 while keeping V1, V4 and V5 open. The unit is now filtering. Continue filtering until maximum Delta P is observed on the inlet of the filter or until the flow of discharge liquid drops to an unacceptable level.

WARNING

The feed pressure as measured at the inlet to the filter press should never be allowed to exceed the maximum operating pressure of the filter press. If the feed pressure is observed to be greater than the maximum operating pressure of the press, immediately turn off the sludge feed pump and proceed to the next step. (Determine cause of over pressurization and correct.)

Wash - This step may be omitted if not required in the process. Close V4, V3, V2, V5 and V1. Open V7 and V6 After V7 and V6 are open, turn on the wash feed pump. Leave wash feed pump on until washout liquid is clean.

WARNING

The wash liquid feed pressure as measured at the inlet to the filter press should never be allowed to exceed the maximum operating pressure of the filter press. If the wash liquid feed pressure exceeds the maximum operating pressure of the filter press, immediately turn off the wash liquid feed pump. Do not operate the filter press at wash feed liquid pressures in excess of the maximum operating pressure of the filter press.

Cake Dry - Open valves V3 and V8 and close all other valves. Leave air supply on until the cake is dry.

WARNING

The air supply pressure as measured at the air inlet should never be allowed to exceed the maximum operating pressure of the filter press. If the air inlet pressure is observed to be greater than the maximum operating pressure of the press, immediately turn off the air supply valve.

D 062

continued....

QUADRA PRESS FILTER MANUAL

OPERATION (continued) ALL MODELS

IMPORTANT

The cake discharge pendent for actuating the shifting mechanism is disabled unless the movable head is in the fully retracted position as indicated by the Head Retracted indication lamp. The The FORWARD and REVERSE pushbuttons on the pendent will not operate unless the movable head is in the Fully Retracted position.

Cake Discharge/Search for Plate - Depress FORWARD pushbutton on pendent control station until shifter pick-up engages one plate on both sides. The shifter mechanism is designed to lift and drop the plate approximately 3/16 of an inch. This is normal and an indication that the plate transport mechanism is functioning properly. The operator should place himself so that he is able to view each plate from the side during the cake discharge sequence so that he is able to insure complete cake discharge, observe the condition of the bags, and insure proper pickup engagement of the plate.

IMPORTANT

If the operator mistakenly advances the shift mechanism so that two or more plates are engaged, the operator must stop the cake discharge sequence and manually advance each plate toward the movable head to effect cake discharge. All of the cake/solids from each chamber of the filter press must be discharged. Serious damage will result to filter plates if all of the cake is not discharged from the filter press during the filter cycle.

Cake Discharge-Shift Plate - Depress and hold the REVERSE button on the shifter pendent. The plate will be transported toward the movable head. When the plate reaches the movable head or the plate stack, release the REVERSE pushbutton. Proceed to the Discharge/Search for plate step and repeat Cake Discharge sequence until all of the cake is completely discharged from the filter press.

After all plates have been transported to the movable head and the cake is discharged, depress the FORWARD pushbutton and hold until the Shifter in Park indicator light is lit. The shifter will move toward the fixed head, move around the sprockets and return to an area near the movable head. The shifter head will then activate a limit switch at this area. This is the "Shifter in Park" position. The shifter must be in the park position before either the Extend Ram or Retract Ram buttons will be activated. The movable head will not extend or retract until the shifter is in the park position.

D 063

QUADRA PRESS FILTER MANUAL

ALL MODELS

OPERATION

Refer to sequence chart (Table of Contents, Item 19) for recommended operating sequence. Below is a description of each step in the operating sequence.

Head Extend - With the control power selector switch ON, depress the Hydraulic Pump Start button momentarily to start the electric driven hydraulic pump.

WARNING

Serious injury or death will result when extending ram if operators or plant personnel place arms, legs or the entire body in the path of the plate stack or the movable head while the movable head or plate stack is extending. The hydraulic system of the filter press is capable of producing forces in great excess of that required to produce bodily injury or death. Use extreme caution before depressing Extend Ram pushbutton. Inspect both sides of the filter press as well as the area between the plate stack and the fixed head, the area between the movable head and the plate stack and the area between plates for any personnel. Do not depress Extend Ram pushbutton if personnel are in or near these areas as serious injury or death will result.

Depress the Extend Ram pushbutton and hold. The movable head will advance toward the fixed head. Continue to depress the Extend Ram pushbutton until the plate stack is fully compressed and the "air motor run" light comes on. The "air motor run" light is the indication that air has been applied to the high pressure, low flow air operated reciprocating booster pump. When the booster pump is running and the "air motor run" light is on, it is not necessary to depress either the Extend Ram pushbutton or the Hydraulic Pump Start pushbutton. The booster pump will automatically increase the hydraulic pressure to the system operating pressure required to seal the press during filtration. The booster pump will increase the hydraulic system pressure to the set pressure and then stall. The pressure gauge on the hydraulic system outlet manifold will read this set pressure. The booster pump reciprocating rate will gradually decrease until it will finally stall at the hydraulic system set pressure. This is normal and an indication that the hydraulic system is functioning properly. The pump will reciprocate occasionally to maintain system operating pressure, this is also normal and an indication that the hydraulic system is functioning properly. The hydraulic system set pressure should be maintained during the following steps: Prefill/Air Purge, Filter, Wash and Cake Dry.

D 084

DURCO THE DURIRON COMPANY, INC.

QUADRA PRESS FILTER MANUAL

ALL MODELS

SEMI-AUTOMATIC FILTER PRESS OPERATING INSTRUCTIONS

A) Product Filtration:

1. Turn the Control Power selector to the ON position.
2. Before operating, the plate shifter must be in its parked position, as indicated by the green light. If it is not on, and if the head retracted light is not on also, depress Limit Switch #2 (LS2) manual override inside the panel, and then use the Search/Shift pendent on the flexible cord to transfer the shifter until the light comes on.
3. If the air motor running light is not on, indicating that the plates are being compressed to their final pressure, then start the hydraulic motor and depress the extend ram pushbutton until it does so. The ram pushbuttons are not active unless the shifter in park limit is made, or if the LS1 manual override inside the panel is depressed.
4. Once the air motor is holding constant pressure (pulsed every 3 to 7 minutes) , the process is ready to start.
5. Open feed valves, turn on feed pump and any other necessary equipment. NOTE: Feed pressure not to exceed design pressure.

B) Plate Cleaning:

1. All valves and pumps must be turned off.
2. Depress Retract Ram pushbutton and then Hydraulic Pump Start pushbutton until the air motor light goes out. Continue to retract ram until the head retracted light comes on.
3. Using the hand held pendent, press Forward (Search) button to engage one plate, and Reverse (Shift) (transport) back to the head. Repeat this cycle until all plates are shifted.
4. Care should be taken to assure all solids are removed from cloths, especially sealing edges and feed ports.
5. After inspection, return shifter to its parked position, then repeat steps 3, 4 in part A above to close the filter.

D 065

ATTH0.DOC
129133
07/28/92

STEP	START BY	DESCRIPTION	TERM BY	V1	V2	V3	V4	V5	V6	V7	V8	MOTOR STARTER CONTROL PWR	CONTROL POWER SELECTOR	HYDRAULIC PUMP START	HYDRAULIC PUMP STOP	EXTEND RAM	RETRACT RAM	FORWARD DR PENDANT	REVERSE DR PENDANT	AIR SUPPLY		FEED PUMP	WASH PUMP
1	SHIFTER IN PARK LIGHT	HEAD EXTEND	AIR MOTOR RUN LIGHT											X		X							
2	AIR MOTOR RUN LIGHT	PREFILL/AIR PURGE	LIQUID AT FILTERED LIQ	X			X	X														X	
3	LIQUID AT FILTERED LIQ	FILTER	ΔP	X	X	X	X	X														X	
4	ΔP	WASH	TIME						X	X													X
5	TIME	CAKE DRY	TIME			X					X												
6	TIME	HEAD RETRACT	HD RETRACT LIGHT											X			X						
7	HD RETRACT LIGHT	SEARCH FOR PLATE	PLATE ENGAGEMENT											X				X					
8	PLATE ENGAGEMENT	SHIFT PLATE	PLATE STACK CONTACT											X					X				
9	PLATE STACK CONTACT	SEARCH FOR PLATE	PLATE ENGAGEMENT											X				X					
10		SHIFT PLATE												X					X				
11														X				X					
12														X					X				
13														X				X					
14		SEARCH FOR PLATE	SHIFTER IN PARK LIGHT											X					X				
15																							
16																							

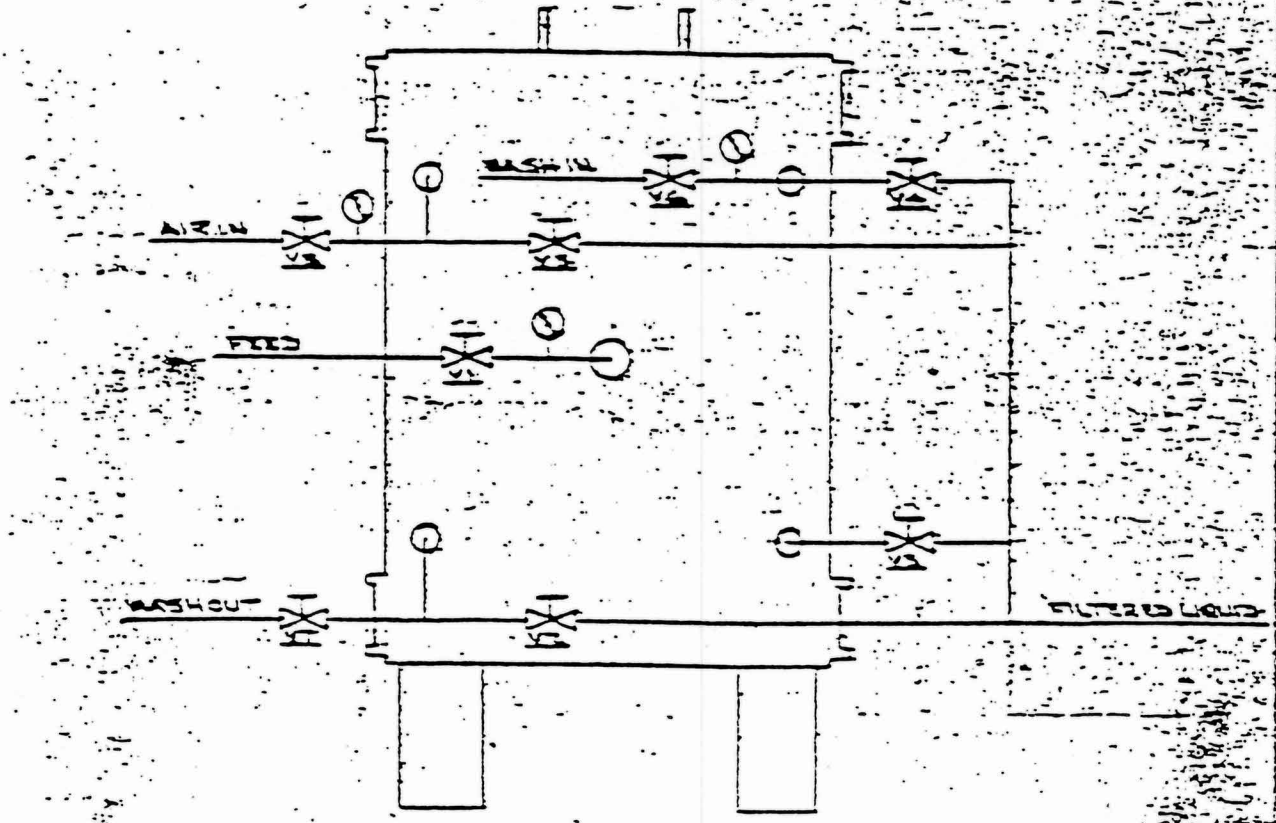

RECESSED CHAMBER PLATE

THIS DRAWING IS THE PROPERTY OF THE DURIRON COMPANY, INC. AND ANY DESIGN, DEVELOPMENT OR INVENTION WHICH IT MAY SUGGEST IS THE PROPERTY OF THE DURIRON COMPANY, INC.

THE DURIRON CO., INC.
FILTRATION SYSTEMS DIVISION

G2T095A

D

066

DURCO THE DURIRON COMPANY, INC.

QP/QPF/W
225 psig

QUADRA PRESS FILTER MANUAL

NOTE: HYDRAULIC SYSTEM HAS BEEN ADJUSTED AND TESTED. IF FURTHER ADJUSTMENTS ARE REQUIRED FOR ANY REASON, THE FOLLOWING METHOD IS TO BE USED:

HYDRAULIC SYSTEM START UP

Familiarize yourself with the hydraulic components as called for on the hydraulic power unit sketch and schematic drawing.

NOTE: No power supply attached. air, electricity. (No plates installed.)

1. Loosen locknuts on pump and hydraulic motor relief valves (R.V.), also on speed controls (S.C.), (a total of five locations).

2. Fill reservoir with hydraulic fluid (Enerpac HF-100 or equal) to Height as indicated at sight glass, (with rams retracted).

3. Turn on electrical power at control panel. RETRACT HEAD and SHIFTER IN PARK lights should be on. If these lights are not on, start electric motor, depress manual overrides inside panel to either retract head or move shifter. With motor running, extend and retract ram several times so as to purge air from the lines. Check hydraulic fluid level in the retracted position, fill to "F" if necessary.
   ‡ Extend ram once more and DEADHEAD ram completely extended. Set pump R.V. so as to read 650 to 700 psig; be sure valve is open to pump pressure gauge. Retract ram.

4. Loosen nut on air regulator and open (counterclockwise). Remove cap nut from high pressure relief valve and open (counterclockwise). Attach air supply to 1/2" NPT connection.

5. Pressure switch has been preset at 500 to 550 psig. Extend ram, pressure switch will turn off electric motor and activate Haskel air motor. Alternately, adjust air regulator and high pressure relief valve to a reading of 29 psig on the air pressure gauge and 2900 psig on the manifold high pressure gauge. (The 2900 psig setting is standard unless otherwise specified by Engineering.) The emergency relief valve (tamper proof) is factory set and tested for 3400 psig. With final adjustment of air regulator and high pressure (R.V.), pressure should hold constant, air motor will pulse once or so every 5 to 7 minutes. (See NOTE ** page 2.) (See NOTE * page 2.)

6. Flow control valve should be set at 1/4 open from full clockwise position. (This should provide for an approximate 4 second delay on pressure bleed down, so as to minimize shock when activating HEAD RETRACT mode.) Repeat high pressure closing and unloading sequence until smooth operation is achieved. Retract ram.

‡ DEADHEAD - Several plates must be removed.

D 067

continued...

HYDRAULIC SYSTEM STARTUP (continued)

7. With HEAD RETRACT light on and using electrical pendent, press FORWARD button to engage one plate and REVERSE (transport) toward movable head. Repeat cycle. At this time, adjust hydraulic motor speed control and relief valves (transport). Forcing plate against movable head, set relief valve pressure to read 400 psig max.

   Speed control setting = 12" travel/2 sec. approx. Speed adjustment in the FORWARD (pick-up) mode is the same as given above. Set relief valve FORWARD (pick-up) by the following procedure:

   (Visually compare the thread projection on the relief valve REVERSE (transport) side, this should assume a 400 to 600 psig setting which is acceptable.)

   Complete shifting cycle until SHIFTER IN PARK light comes on.

8. Repeat entire press cycle with necessary adjustments until smooth operation is achieved. When satisfied, replace all covers, tighten lock and cap nut, etc.

NOTE: ** To assure proper setting of high pressure relief valve, very slowly increase air regulator to read a maximum pressure of 40 psig. The high pressure manifold gauge should read 3200 psig when relieving. CAUTION: Do not increase air drive pressure to a setting which will allow high pressure manifold gauge to read above 3400 psig. When high pressure relief valve is properly functioning, the air motor will pulse, the R.V. will "sound" or vibrate to the touch.

NOTE * In all cases when pressure adjustments are made at the air regulator, they will be determined according to the reading on the high pressure gauge.

D068

ATTACHMENT D2

CONTAINER STORAGE AREA DESCRIPTIONS

AND

CONTAINERIZED WASTE STORAGE LOCATIONS