DUKE ENERGY.

139 E. Fourth Street, EM740
Cincinnati, Ohio 45202

April 27, 2016

VIA OVERNIGHT DELIVERY

Mr. Robert Kaplan, Acting Regional Administrator
Region 5
U.S. Environmental Protection Agency
77 W. Jackson Blvd.
Chicago, IL 60604

Ms. Carol S. Comer, Commissioner
Indiana Department of Environmental Management
Indiana Government Center North, 13th Floor
100 N. Senate Avenue
Indianapolis, IN 46204

RE: Fundamentally Different Factors Variance Application for Duke Energy Indiana, LLC – Edwardsport IGCC Station (NPDES Permit IN0002780)

Dear Mr. Kaplan and Ms. Comer:

Enclosed, please find an application by Duke Energy Indiana, LLC for a fundamentally different factors variance from recently adopted revisions to the Steam Electric Effluent Limitation Guidelines that are applicable to gasification wastewater generated at the Edwardsport IGCC Station. This Application is being submitted pursuant to the authority granted by Section 301(n) of the Clean Water Act, 33 U.S.C. § 1311(n).

Please contact me (513-287-2268 or pat.coyle@duke-energy.com) if you have any questions about the enclosed materials.

Sincerely,

Patrick Coyle

Patrick Coyle
Duke Energy – Environmental Services

Enclosure

Check Date: Apr/26/2016 Vendor Number: 0000066906 Name: STATE OF INDIANA Check Number: 1000148089

Invoice Number	Invoice Date	Voucher ID	Gross Amount	Discounts Taken	Late Charge	Paid Amount
04262017 FEE FOR FDF VARIANCE APPLICATION	Apr/26/2016	10786677	50.00	0.00	0.00	50.00

COPY

Check Number:	Date	Total Gross Amount	Total Discounts	Total Late Charges	Total Paid Amount
1000148089	Apr/26/2016	$50.00	$0.00	$0.00	$50.00

DUKE ENERGY NAME AND LOGO ARE ON BACK. HOLD AT AN ANGLE TO VIEW. VOID IF ABSENT.

DUKE ENERGY.

Duke Energy Business Services
400 South Tryon Street
CHARLOTTE, NC 28104-0600

JPMORGAN CHASE BANK, N.A.
Syracuse, NY

[redacted]

50-937/213

Corporate Accounts Payable
ST25B 400 South Tryon Street
Charlotte, NC 28285

Date 4/26/16

Pay *Fifty and xx / 100 Dollars* $**50.00

To The Order Of
STATE OF INDIANA
DEPT. OF ENVIRONMENTAL MGMT.
CASHIERS OFFICE
100 N SENATE AVENUE
Indianapolis, IN 46204

Authorized Signature

⑈[redacted]⑈

APPLICATION OF
DUKE ENERGY INDIANA, LLC
FOR
A FUNDAMENTALLY DIFFERENT
FACTOR VARIANCE

April 27, 2016

APPLICATION OF
DUKE ENERGY INDIANA, LLC FOR
A FUNDAMENTALLY DIFFERENT FACTOR VARIANCE

TABLE OF CONTENTS

1.0 INTRODUCTION 1

2.0 BACKGROUND 1

2.1 Edwardsport IGCC Station 1

2.2 EPA's Rulemaking for Updated Stream Electric Power Generating Point Source Category Effluent Limitation Guidelines 2

2.2.1 Final Stream Electric ELGs 2

2.2.2 Preliminary Rulemaking Activities for Steam Electric ELGs 3

2.3 Need for a FDF Variance for Edwardsport IGCC Station 4

3.0 PLANT SPECIFIC INFORMATION 6

3.1 Polk Station 6

3.1.1 Polk's Gasification Process 6

3.1.2 Polk's Grey Water Treatment 8

3.2 Edwardsport IGCC 8

3.2.1 Edwardsport's Gasification Process and Generation of Grey Water 8

3.2.2 Edwardsport's Grey Water Treatment System ("GWTS") 9

3.3 Wabash River 11

3.3.1 Wabash River's Gasification Process 11

3.3.2 Wabash's Gasification Wastewater Treatment 12

4.0 SUMMARY OF EPA'S RATIONALE AND TECHNICAL BASIS FOR THE BAT ELGS FOR GASIFICATION WASTEWATER 13

4.1 Statutory Requirements for BAT Effluent Limitations 13

4.2 Evaporation System Is Technology Basis for Gasification Wastewater ELGs 13

4.3 Gasification Wastewater Sampling at Polk and Wabash 13

4.4 Data Exclusions and Calculation of Limitations 15

4.5 Compliance Costs 15

4.6 Final ELG Limitations 16

5.0 DESCRIPTION OF FUNDAMENTALLY DIFFERENT FACTORS FOR THE EDWARDSPORT IGCC STATION 16

5.1 Summary of Fundamental Differences 16

5.2 Fundamental Differences in Fuels Used in the Gasification Process 18

5.2.1 Differences in Fuels Used by Polk, Wabash and Edwardsport IGCC 18

5.2.2 Differences in Fuel Constituents 18

5.2.3 Nature and Effect of the Fundamentally Different Fuel Factor 19

5.2.3.1 Differences in Ash Content 19

5.2.3.2 Differences in Chlorine Content 20

5.2.3.3 Differences in Mercury Content 21

5.3 Fundamental Differences in Preliminary Cooling and Cleaning of Syngas 21

5.3.1 Syngas Cooling and Cleaning at Polk Station 22

5.3.2 Syngas Cooling and Cleaning at Edwardsport IGCC 22

5.3.3 Syngas Cooling and Cleaning at Wabash IGCC 23

5.3.4 Nature of the Fundamentally Different Factor Relating to Syngas Cooling and Cleaning 23

5.4 Fundamental Differences in the Type and Configuration of the Evaporative Processes Employed in Treatment of Gasification Wastewater 24

5.4.1 Polk Station's Treatment of Gasification Wastewater 25

5.4.1.1 Type and Configuration of Polk's Evaporative Processes 25

5.4.1.2 Configuration of the Condensate Outputs of Polk's Evaporative Processes 25

5.4.2 Edwardsport IGCC's Treatment of Gasification Wastewater 25

5.4.2.1 Differences in Type and Configuration of the Evaporative Processes 26

5.4.2.2 Differences in the Configuration of the Condensate Outputs of the Evaporative Processes at Edwardsport IGCC 28

5.4.2.3 The ELGs for Gasification Wastewater Are Not Representative of the Combined Condensate Effluent of Edwardsport IGCC's GWTS 30

5.4.3 Wabash IGCC 32

5.4.4 Nature of the Fundamentally Differences Associated with Treatment of the Gasification Wastewaters 32

6.0 DUKE ENERGY'S FDF VARIANCE APPLICATION MEETS STATUTORY ELIGIBILITY FACTORS 33

6.1 Statutory Prerequisites to an FDF Variance 33

6.2 Duke Energy's Application Satisfies the Statutory Prerequisites 33

6.2.1 Fundamentally Different Factors 33

6.2.2 Information Base for Application 33

6.2.3 The Proposed Alternative Limitations No Less Stringent than Justified by the Fundamental Difference 34

6.2.4 The Proposed Alternative Limitations Will Not Result in Markedly More Adverse Non-Water Quality Environmental Impacts 34

6.2.5 The Application is Timely 34

7.0 PROPOSAL FOR ALTERNATE BAT EFFLUENT LIMITATIONS FOR EDWARDSPORT IGCC STATION'S GASIFICATION WASTEWATER 35

7.1 **Basis of Duke Energy's Requested Alternative Effluent Limitations** 35

7.2 **Proposed Alternative BAT Effluent Limitations** 36

7.3 **Duke Energy's Proposed Alternative Effluent Limitations Are Consistent with Regulatory Requirement** 37

7.3.1 The Proposed Alternative Effluent Limitations Will Assure Compliance with Water Quality-Based Effluent Limitations *37*

7.3.2 The Proposed Alternative Effluent Limitations Will Assure Compliance with Section 208(e) of the CWA *39*

8.0 RESERVATION OF RIGHTS 39

9.0 CONCLUSION 40

10.0 CERTIFICATION 41

APPENDICES:

Appendix 1: 2013 and 2015 Data from Edwardsport IGCC Grey Water Treatment System

Appendix 2: Duke Energy Technical Memorandum on Edwardsport IGCC – Fundamentally Different Factors Request (April 2016)

Appendix 3: Coal Analyses for Edwardsport IGCC Station

Appendix 4: Condensate Streams and Final Effluent Data – April 2016 Edwardsport IGCC Grey Water Treatment System

Appendix 5: Excerpts from NPDES Permit No. IN0002780 issued March 30, 2016 and Accompanying Fact Sheet

APPLICATION OF
DUKE ENERGY INDIANA, LLC FOR
A FUNDAMENTALLY DIFFERENT FACTOR VARIANCE

1.0 INTRODUCTION

This is an application by Duke Energy Indiana, LLC ("Duke Energy Indiana") for a fundamentally different factor variance ("FDF variance") from the Best Available Technology Economically Achievable (BAT) effluent limitation guidelines contained in recently adopted revisions to the Effluent Limitation Guidelines for the Steam Electric Power Generating Point Source Category, 40 CFR Part 423.13, that otherwise will be applicable to the gasification wastewater generated, treated and discharged at the Edwardsport IGCC Station, located at 15424 East State Road 358, Edwardsport, Indiana. This Application is being submitted pursuant to the authority granted by Section 301(n) of the Clean Water Act, 33 U.S.C. § 1311(n).

2.0 BACKGROUND

2.1 Edwardsport IGCC Station

Duke Energy Indiana (sometimes referred to herein as simply "Duke Energy") owns and operates the Edwardsport IGCC Station, an integrated gasification combined cycle ("IGCC") electric generation facility, located in Edwardsport, Indiana. The Edwardsport IGCC Station began commercial operation in June 2013. The gasification process utilized at the Station includes a recirculating grey water system associated with initial cooling and cleaning of raw synthesis gas ("syngas") produced by the gasifiers. Blowdown from the grey water recirculating system, henceforth referred to in this Application as "grey water", is subjected to extensive treatment in the Station's grey water treatment system ("GWTS").

The GWTS at Edwardsport IGCC Station is a complex wastewater treatment system that utilizes a preliminary mechanical vapor recompression concentrator followed by two crystallizers with differing functions. (All evaporators are based on a forced circulation design). The combined condensate streams from the evaporation treatment system undergo further polishing through a reverse osmosis ("RO") system. RO reject concentrate is returned to the treatment process, while RO permeate is the treated grey water, or "effluent", from the GWTS.

Treated grey water is primarily reused as makeup water for the recirculating cooling water system for the gasification process, but under certain circumstances is routed directly to downstream portions of the wastewater treatment system of the Station for discharge to the West Fork of the White River in Knox County, Indiana.

The Indiana Department of Environmental Management (IDEM) issued a renewal of NPDES Permit No. IN0002780 to Duke Energy on March 30, 2016 authorizing discharges from the Edwardsport IGCC facility. The renewal permit incorporates the BAT effluent limitations for gasification wastewater established by the recently adopted ELG revisions, including effluent limits for arsenic, mercury, selenium, and total dissolved solids (TDS). The BAT limitations are applied directly to the output of the GWTS at a designated internal outfall.

2.2 EPA's Rulemaking for Updated Steam Electric Power Generating Point Source Category Effluent Limitation Guidelines

While the Edwardsport IGCC Station was under construction, the U.S. Environmental Protection Agency ("EPA") was engaged in an effort to develop revisions to its Effluent Limitation Guidelines for the Steam Electric Power Generating Point Source Category ("Steam Electric ELGs"). In the course of its development of a draft rule for revising the Steam Electric ELGs, EPA conducted a visit of the construction site for Edwardsport IGCC Station in March 2011.

2.2.1 Final Steam Electric ELGs

On November 3, 2015, the Final Effluent Limitations Guidelines and Standards for the Steam Electric Power Generating Point Source Category were published in the Federal Register at 80 FR 67838. Among several other requirements, the final rule establishes new BAT effluent limitation guidelines for gasification wastewater and includes a separate definition for "gasification wastewater" which refers generally to "any wastewater generated at an integrated gasification combined cycle operation from the gasifier or the syngas cleaning, combustion, and cooling processes."[1] These aspects of the final rule are unchanged from the proposed rule. The rule identifies an evaporation system using a falling-film evaporator (or brine concentrator) to produce a concentrated wastewater stream (brine) and a reusable distillate stream as the model

[1] See 40 CFR 423.11(q). The full definition of "gasification wastewater" clarifies and narrows the general description quoted above. The term, as so defined, is generally capitalized as Gasification Wastewater in the remainder of this Application.

treatment technology on which the BAT ELGs are based for the control of pollutants in Gasification Wastewater. Separate effluent limitation guidelines are established by 40 CFR 423.13(j)(1)(i) for arsenic, mercury, selenium and total dissolved solids ("TDS") contained in Gasification Wastewater. The final ELGs for Gasification Wastewater are reproduced in Table 2-2 provided in Section 2.3, below.

2.2.2 Preliminary Rulemaking Activities for Steam Electric ELGs

Previously, EPA conducted site visits at and collected information, pursuant to Section 308 of the Clean Water Act ("CWA"), regarding Gasification Wastewater from the *Questionnaire for the Steam Electric Power Generating Effluent Guidelines* ("Steam Electric Survey") from the Wabash River IGCC Repowering Plant ("Wabash") and the Tampa Electric Company's Polk IGCC Power Station ("Polk"). Both plants were required to sample Gasification Wastewater at EPA-designated sampling locations at the influent and effluent for the evaporation system at each facility. However, only arsenic and mercury samples taken from the front half of the evaporation system at Polk were relied upon by EPA in establishing the arsenic and mercury effluent limitation guidelines, respectively, for Gasification Wastewater. EPA did not utilize any data from Polk's forced circulation evaporator or any effluent data from Wabash in establishing the arsenic and mercury ELGs.[2]

EPA's proposal to update the Steam Electric ELGs was published for public comment on June 7, 2013, at 78 FR 34432. Duke Edwardsport participated in the rulemaking proceeding despite the fact that its IGCC plant was still in the planning phase, under construction, and/or just starting operations during the various stages of the rulemaking. In summary, Duke Edwardsport argued the following points throughout the rulemaking process: (1) the designs of the Polk, Wabash, and Duke Edwardsport IGCC plants differ significantly, including the technology utilized for syngas cooling and cleaning; (2) Polk, Wabash and Duke Edwardsport each gasifies a different fuel (pet coke and coal blend, pet coke, and coal, respectively) which can result in variability of constituents and concentrations in the grey/sour water; (3) Polk, Wabash and Duke Edwardsport generate different commercial byproducts from the acid gas removal process: Polk produces sulfuric acid, Wabash uses the Claus process to generate an elemental sulfur product, and Duke

[2] Technical Development Document for the Effluent Limitations Guidelines and Standards for the Steam Electric Power Generating Point Source Category ("TDD"), pp. 13-26, 13-27, (EPA-821-R-15-007; September 2015).

Edwardsport produces elemental sulfur; (4) it is premature to establish national effluent limits for the gasification subcategory, particularly given that the Edwardsport IGCC was not yet in operation, and consequently EPA should reserve setting the effluent limitation guidelines for Gasification Wastewater until the potential effects of the design and operational differences among the plants has been addressed; (5) four samples from four days from only the front half of the evaporator system at a single source ("data set") does not provide a comprehensive or sufficient evaluation of the performance of wastewater treatment technologies for coal gasification systems and is inadequate to support the proposed effluent guidelines for this "subcategory"; (6) EPA did not follow its own data selection and calculation criteria when it established the mercury effluent limitation guidelines for Gasification Wastewater; (7) therefore, it is statistically and technical inappropriate to use the data set to determining the continuous compliance limit. (DCN SE05958A1 – A9). The Edwardsport IGCC facility did not commence commercial operation until June 2013. Consequently, Duke Energy did not have a reasonable opportunity to submit effluent data for its gasification water during the comment period on the proposed ELG rule. Only limited data was acquired before close of the comment period (which did not include TDS sampling) and that data was not definitive on compliance capability with regard to the proposed ELGs.[3] Moreover, similar to the Polk and Wabash facilities, the Edwardsport IGCC experienced substantial operational variability during the first year of operation. Duke Energy's focus during this period was on eliminating operational interruptions.

2.3 Need for a FDF Variance for Edwardsport IGCC Station

As previously stated, Duke Energy commenced construction of the Edwardsport IGCC Station in early 2008, long before EPA published the proposed revisions to the Steam Electric ELGs in June 2013. The conceptual design for the grey water treatment system at Edwardsport IGCC was developed in 2009-2010 based on best concepts in the industry at that time involving evaporative processes to effectively remove dissolved and particulate pollutants from the grey water wastestream. EPA later identified such evaporative treatment technologies as the "model technology" on which the final ELGs for Gasification Wastewater were said to be based.

[3] Nonetheless, Duke Energy included this limited data in a letter to OMB dated September 4, 2015 during that agency's review of the proposed final version of the Steam Electric ELGs. DCN SE06370.

Notwithstanding having installed the model technology, the effluent quality from the GWTS at Edwardsport IGCC, though resulting in compliance with Indiana's water quality standards, will not meet the ELGs for mercury and total dissolved solids in Gasification Wastewater. This is seen from a comparison of GWTS' effluent quality summarized in the following table, based on available effluent data, with the final ELGs for Gasification Wastewater.

Table 2-1

Summary of Effluent Data from Edwardsport IGCC Station*			
Pollutants	Maximum Value	30-day Average (Highest value)	Long-term Avg.
Arsenic, total (ug/L)	15		1.9
Mercury, total (ng/L)	12.8	9.1[a]	6.3
Total dissolved solids (TDS) (mg/L)	222	67.2[b]	39.8

*See Appendix 1 for the effluent data summarized in this table.
[a] September 2015
[b] October 2015

For ease of comparison, the final ELGs for Gasification Wastewater are reproduced below:

Table 2-2

BAT ELGs for Gasification Wastewater from Final ELG Rule		
Pollutants	Daily Maximum	30-day Average
Arsenic, total (ug/L)	4	--
Mercury, total (ng/L)	1.8	1.3
Selenium, total (ug/L)	453	227
Total dissolved solids (TDS) (mg/L)	38	22

Comparison of effluent data from the GWTS for mercury (total) to the ELG for mercury shows the highest daily value and the highest 30-day average to both be approximately seven times the Daily Maximum EGL and the 30-day Average ELG, respectively. TDS effluent data from the GWTS yields a highest daily value nearly six times greater than the Daily Maximum ELG and a highest 30-day average approximately three times the 30-day Average ELG for that parameter.

It will not be possible for the Edwardsport IGCC to consistently comply with the ELGs for mercury and TDS without adding more treatment capability. If an FDF variance is not granted that accepts the existing treatment capability of the GWTS, Duke Energy will be obligated to incur additional costs for grey water treatment beyond the approximately $120 million in capital costs already incurred for the existing GWTS in order to achieve compliance with the ELGs for Gasification Wastewater. The specific alternate GW-ELGs requested by Duke Energy under this Application are described below in Section 7.0.

In Section 5.0 of this Application, Duke Energy will explain the fundamentally different factors pertaining to the Edwardsport IGCC that support the need for an FDF variance.

3.0 PLANT SPECIFIC INFORMATION

3.1 Polk Station

3.1.1 Polk's Gasification Process

Polk is an IGCC Power Station in Florida utilizing a blend of pet coke and coal from the world market, while also operating a sulfuric acid plant to recover sulfur from raw syngas. Polk utilizes gasification technology originally developed by Texaco, now owned by General Electric. It operates an oxygen blown, slurry fed, entrained flow, refractory lined gasifier with a radiant syngas cooler (RSC) and convective syngas coolers (CSC) for heat recovery. The gasifier is a single train configuration with one gasifier supplying fuel to one combustion turbine. Saturated steam created in the gasifier is pumped to the heat recovery steam generation (HRSG) unit where it is used to power a steam turbine.

Polk utilizes approximately 2,200 to 2,500 tons per day of fuel consisting of a blend of petroleum (pet) coke and coal.[4] A slurry of pet coke and coal is pumped into the gasifier to produce syngas. Slag and fly ash are produced as byproducts of the gasification process. Slag and some of the fly ash collects in a water pool located at the bottom of the RSC as the syngas exits the RSC just above the water pool. This wet slag and fly ash is transported through the slag crusher, to the slag conveyor where it is filtered with a screen. The water and fines that pass through the screen are considered "black water." The black water is pumped to Polk's settler feed tank.

The syngas and remaining fly ash flow through a convective syngas cooler to a water scrubber to remove particulates and hydrochloric acid (HCl) from the syngas. The syngas scrubber blowdown, also referred to as "black water" is pumped to the settler feed tank at about 400 gallons per minute. The scrubbed syngas then moves on for further cleaning in the carbonyl sulfide (COS) hydrolysis unit, which converts the COS to hydrogen sulfide (H_2S). Next the syngas is cooled by three small heat exchangers and sent on to Polk's acid gas removal system. Polk uses a solvent, methyl diethanolamine (MDEA), to remove H_2S from the syngas, and subsequently strips MDEA from the H_2S and other noncondensible gases, which are then transferred to the sulfuric acid plant

The black water collected in the settler feed tank, referenced above, is pumped to one of two gravity settlers where flocculant and coagulant are added. The underflow of the gravity settlers is recycled directly back to slurry preparation. The overflow from the tanks is referred to as grey water and is stored for recycling to the syngas scrubbers; however, approximately 100 gallons per minute of grey water is blown down to the brine concentration (evaporative treatment) system.

(Notes from Site Visit at TECO Polk Energy's Polk Power Station on October 8, 2009, DCN SE00071)

[4] Not unexpectedly, the proportion of pet coke and coal in the Polk fuel blend has varied over time. See Section 5.2.1.

3.1.2 Polk's Grey Water Treatment System

Polk utilizes a relatively simple grey water treatment system that includes a preliminary concentrator, consisting of a falling film evaporator, and a crystallizer, using forced circulation evaporator technology. Grey water blowdown is treated first through the preliminary concentrator. The vapor stream from the preliminary concentrator is reused in the evaporative process with a compressor, which compresses the vapor to a pressure that provides additional heat to the evaporator when the pressure is allowed to abate and the vapor stream condenses on the tube side. The condensate stream from the falling film evaporator is reused in the gasification process for pumps seals, instrument purges, and condensate drum.[5]

The brine concentrate from the preliminary concentrator is further concentrated by the crystallizer. The vapor generated from the crystallizer is cooled, condensed, and sent to the grinding sump for use in slurry production for the gasifier, while the liquid brine concentrate is sent to a prill tower for further dewatering of solids (e.g., ammonium chloride) for off-site disposal. The prill tower replaced the original centrifugal solids separation system due to process issues with solids variability in the concentrated brine stream. (TECO, 2002)

Significantly, the condensate streams from Polk's preliminary concentrator and crystallizer are not combined but are reused separately in different manners in different processes, as described above. Neither condensate stream is discharged to waters of the United States.

(Notes from Site Visit at TECO Polk Energy's Polk Power Station on October 8, 2009, DCN SE00071 and SE00071A)

3.2 <u>Edwardsport IGCC</u>

3.2.1 Edwardsport's Gasification Process and Generation of Grey Water

Duke's Edwardsport IGCC Station is a 618-MW (net) IGCC facility fueled by Illinois Basin coal, and producing a byproduct of elemental sulfur. The Edwardsport IGCC utilizes gasification technology under license from General Electric. The IGCC Station consists of two parallel gasification/power generation trains. The gasifiers are oxygen blown, coal slurry fed, and

[5] Notes from Site Visit at TECO Energy's Polk Power Station on October 8, 2009. (DCN SE00071 and SE00071A1)

refractory lined. Each gasifier is accompanied by a radiant syngas cooler (RSC) for heat recovery. Each gasification train produces syngas to fuel a GE combustion turbine, which in turn drives an electric generator. While the combustion turbines are predominately fueled by syngas produced by the gasification trains, the combustion turbines can be fueled by natural gas as well. Saturated steam created in the gasifier is pumped to the heat recovery steam generation (HRSG) unit where it is used to power a steam turbine.

Edwardsport IGCC has a design rate for coal consumption of approximately 6,100 tons per day. A slurry of coal is pumped into the gasifier to produce syngas. Slag and fly ash are produced as byproducts of the gasification process. The Gasification Wastewater (referred to by Duke as "grey water") is generated by the process for initial cooling and cleaning of raw syngas emerging from the gasifiers and associated radiant syngas coolers ("RSCs"). Initial cooling of raw syngas occurs as quench water is brought into direct contact with raw syngas in the RSCs. Quench water remaining from this process and some further intermediate steps becomes grey water. Grey water is used to scrub raw syngas immediately after it leaves the RSC to accomplish particulate removal and further cooling of the syngas. A fraction of the grey water is continually blown down from the grey water holding tank to maintain certain dissolved solids at acceptable levels. The grey water blowdown is the influent to Edwardsport's grey water treatment system.

In sum, the raw syngas generated by the Edwardsport IGCC is subjected to pollutant removal operations, prior to use as a fuel in the combustion turbines, where the volume of gas is less and the contaminant concentrations are higher, resulting in higher removal efficiencies. Syngas passes directly through quench water (black water) and is then scrubbed with grey water. The interaction of black water/grey water with syngas in these preliminary cooling and cleaning processes has the potential to significantly impact the makeup of the black water/grey water.[6]

3.2.2 Edwardsport's Grey Water Treatment System ("GWTS")

In contrast to Polk, the Edwardsport IGCC utilizes a complex grey water treatment system. This treatment system is designed to remove contaminants deriving from the coal or resulting from the gasification process, such as ammonium chloride, formate, and other dissolved solids, as well

[6] The information in this section 3.2.1 is largely drawn from Duke Energy Technical Memorandum: Edwardsport IGCC – Fundamentally Different Factors Request ("Duke Energy Technical Memo"), April, 2016, which is attached as Appendix 2.

as trace levels of metals such as arsenic, mercury and selenium. The treatment system primarily consists of evaporative units, including a preliminary concentrator (using forced circulation evaporation technology) and two crystallizers (also using forced circulation evaporation). Combined condensate streams from the evaporative treatment units is sent to a two-stage reverse osmosis (RO) unit for final polishing of the effluent.

During treatment, the grey water from Edwardsport IGCC's gasification process is first run through a mechanical vapor recompression (MVR) concentrator system.[7] The vapor produced by the concentrator is scrubbed, sent through two sequential compressor units, and then condensed in a forced circulation heat exchanger and the condensate is routed through additional cooling units to the RO feed tank. Uncondensed vapor from the heat exchanger is routed to a barometric condenser.

The concentrated brine liquid from the MVR concentrator is blown down to a CoLD® crystallizer employing forced circulation. Brine concentrate slurry from the crystallizer is pumped to a pressure filter for dewatering of solids prior to disposal. Filtrate is recycled back to the crystallizer.

Vapor generated by the CoLD® crystallizer is scrubbed prior to being piped to an air-cooled condenser. Spent scrubber water from both the MVR scrubber and the CoLD® crystallizer scrubber is recycled for reuse in the respective scrubbers. Blowdown from the two scrubbers is pumped to a second crystallizer, the Formate Crystallizer, for further concentration. The concentrated slurry from this second crystallizer is dewatered in a pressure filter and the filter cake is disposed and filtrate is returned to the crystallizer. Vapor produced by the Formate Crystallizer is also routed to the air-cooled condenser, along with the scrubbed vapor from the CoLD® crystallizer. Uncondensed vapor from the air-cooled condenser is conveyed to the barometric condenser where it combines with uncondensed vapor from the MVR concentrator's heat exchanger. Condensate streams from the air-cooled condenser and from the barometric condenser are routed to the RO feed tank along with the condensate stream from the MVR concentrator's heat exchanger.

[7] A second MVR concentrator can be brought online to supplement the first concentrator when high chloride levels in the grey water require the blowdown of grey water at a rate exceeding the capacity of a single concentrator.

The combined condensate stream is then processed through the two-stage RO system. The reject from the first stage of the RO system is recycled to the input to the MVR concentrator. The RO permeate is routed through tankage for an unused cyanide destruction system to the final effluent point from the grey water treatment system. This treated stream is then reused in the gasification process cooling system to reduce demand for makeup water or discharged to the final settling ponds for additional polishing and discharge. Non-condensable gases exiting the barometric condenser are routed to the Sulfur Recovery Unit.[8]

3.3 Wabash River

3.3.1 Wabash River's Gasification Process

Wabash River Power Station ("Wabash River" or simply "Wabash") is a 262-MW IGCC plant in Terre Haute, Indiana that has operated from October 1995 until the present.[9] This IGCC plant is located next to Duke Energy's Wabash River Station. During the period of EPA's development of the ELGs, SG Solutions owned the gasification system while Wabash Valley Power Association owned the combined cycle power generating unit. Wabash River utilizes the Global Energy E-Gas™ coal gasification process (formerly referred to as the ConocoPhillips technology). Although the plant was originally designed for coal fuel, petroleum coke (pet coke) has been the primary fuel over most of the plant's lifetime. Wabash River gasifies 2,000 tons/day of pet coke with up to 6% sulfur content.

The Wabash River plant utilizes a two-stage, entrained-flow, slagging, refractory lined, gasifier which supplies syngas to one combustion turbine. Gasification operations are generally described as follows. Pet coke is combined with pure oxygen in slurry mixers and is injected into the first stage of the gasifier. Under the high gasifier temperatures, ash melts and flows out the bottom of the vessel where it solidifies as slag. The first stage of the gasifier utilizes a gasifier quench in a closed loop system, with slag returning to the slurry preparation area and water returning to the gasifier quench.

[8] The information in this section 3.2.2 is largely drawn from Duke Energy Technical Memo, which is attached as Appendix 2.
[9] Wabash River's owner has announced plans to retire the plant in May 2016.

Next the syngas flows to the second stage of the gasifier, where additional slurry is injected. The syngas leaving the gasifier flows to the high temperature heat recovery unit to produce high-pressure saturated steam. Syngas is then cooled and scrubbed with sour water. Particulates from Wabash's heat recovery unit are filtered from the syngas in a hot/dry filter and are recycled to the first-stage of the gasifier where the carbon is converted into more syngas. Sour water is collected at the heat recovery unit holding tank.

Following the heat recovery unit, syngas then is further cooled and directed through a catalyst that hydrolyzes carbonyl sulfide (COS) to hydrogen sulfide (H_2S). The syngas is then processed through a methyldiethanolamine (MDEA) based absorber/stripper columns where acid gas is removed. Clean syngas is then transferred to the combustion turbine. The acid stream is transferred to a sulfur recovery process where sulfur is recovered and marketed by Wabash.

The sour water from the condensate and scrubber blowdown streams is combined with the sour water return from the sulfur recovery unit. Approximately 60% of the sour water is recycled back to slurry water. The remaining 40% is directed to the Gasification Wastewater treatment system.

3.3.2 Wabash's Gasification Wastewater Treatment

EPA conducted a site visit at Wabash River on February 25, 2009. The sour water in Wabash's gasification treatment is sent to a CO_2 stripper to remove carbon dioxide. Some of the stripped water is recycled back to the coal slurry process. The rest of the stripped water is sent to a second stream stripper to remove ammonia. The water exiting the ammonia stripper is transferred to a vapor compression system, consisting of an evaporator (referred by Wabash as a zero liquid discharge (ZLD) system). The concentrated brine from Wabash's evaporator is sent to a rotary drum dryer added in 2002 to remove the water from the salts. The salts are transferred offsite as hazardous waste. Distillate from the evaporator is discharged from the plant, or used in coal slurry make-up water. An activated carbon unit is present at the facility although its specific use is unclear. (Final Notes from Site Visit at WVPA's Wabash River Power Station on February 25, 2009, DCN SE03638 and EPA-HQ-OW-2009-0819-4655, DCN SE05958A6)

4.0 SUMMARY OF EPA'S RATIONALE AND TECHNICAL BASIS FOR THE BAT ELGS FOR GASIFICATION WASTEWATER

4.1 Statutory Requirements for BAT Effluent Limitations

Industrial sources of discharges of toxic and nonconventional pollutants are required, under CWA Section 301(b)(2)(A), 33 U.S.C. §1311(b)(2)(A), to apply the best available technology economically achievable ("BATEA" or, more commonly, "BAT") to control such discharges, as determined for categories and classes of such sources under regulations issued by EPA pursuant to CWA Section 304(b)(2), 33 U.S.C. §1314(b)(2). Section 304(b)(2)(B) specifies in part that:

> Factors relating to the assessment of best available technology shall take into account the age of equipment and facilities involved, the process employed, the engineering aspects of the application of various types of control techniques, process changes, the cost of achieving such effluent reduction, non-water quality environmental impact (including energy requirements), and such other factors as the Administrator deems appropriate.

4.2 Evaporation System Is Technology Basis for Gasification Wastewater ELGs

The final rule establishing the Steam Electric ELGs, published at 80 Fed. Reg. 67838, 67853, identifies an evaporation system using a falling-film evaporator (or brine concentrator) to produce a concentrated wastewater stream (brine) and a reusable distillate stream as the BAT technology basis for the control of pollutants in Gasification Wastewater. EPA's Technical Development Document for the Steam Electric ELGs reiterates that this is the model technology for Gasification Wastewater, typically using the term "vapor-compression evaporation" to describe this treatment technology. (TDD 3-14, 13-7) EPA found evaporation technology to be well-demonstrated in the industry for the treatment of Gasification Wastewater, because all three IGCC plants with Gasification Wastewater in operation at the time of promulgation of the Final Rule (Polk, Wabash, and Edwardsport) utilized evaporation technology to treat Gasification Wastewater. (TDD 8-16, 17)

4.3 Gasification Wastewater Sampling at Polk and Wabash

In developing limits for Gasification Wastewater, EPA considered data from two sampling locations in the vapor compression evaporation process: condensate from the vapor compression

evaporator (at Polk and Wabash) and condensate from the forced circulation evaporator (crystallizer, at Polk). Although Polk reuses its Gasification Wastewater, EPA considered both streams as a potential basis for limits because a plant could choose to reuse or discharge both streams, or reuse one and discharge the other. (TDD 13-26) EPA acknowledged the existence of Duke Energy's Edwardsport Power Station IGCC system; however, it was not in commercial operation at the time of EPA's sampling program. (TDD 3-14)

Polk was instructed to sample on four consecutive days (October 18 -21 2010) at the following locations: (1) at the tap off the pump drain that transfers the neutralized weak acid stream to the grey water surge tank (SP-1); (2) at the influent to the vapor compression evaporator at an existing sample tap on the suction side of the transfer pumps from the grey water surge tank to the vapor compression evaporator system (SP-2); (3) at the condensate stream from the vapor compression evaporator prior to returning to the condensate storage tank and then to the condensate pump seals, instrument tap flushes, and the slag screen (SP-3); and (4) at the exit of the forced circulation evaporator prior to being returned to slurry preparation (SP-4). (CWA 308 Monitoring Letter and Instructions to Polk, DCN SE01325, Appendix I, DCN SE01325A09, including, Notes from On-Site Review of Industry Self-Monitoring Sampling at TECO Energy's Polk Power Station on October 18-19, 2010; (TDD 13-14) Polk sampled the above-referenced locations on October 18-19 and October 26-27, 2010, rather than during four consecutive sample days.

EPA instructed Wabash to conduct sampling on four consecutive days (January 31st through February 3, 2011) at the following locations: (1) at the sour water feed, collected as the combined condensate and chloride scrubber blowdown streams, to the treatment system at the sample tap prior to the carbon filter beds (SP-1); (2) at the sour water return from the sulfur recovery unit prior to it combining with the sour water exiting the filter beds (SP-2); (3) at the sour water feed to the vapor crystallizer (RCC) evaporator from the sample tap located immediately downstream of the E-271 heat exchanger (SP-3); and (4) at the vapor crystallizer (RCC) evaporator distillate discharge line (SP-4). (August 31, 2010 308 Monitoring Letter and Instructions to Wabash, DCN SE01325, Appendix J) Wabash conducted its sampling events during the four consecutive days mentioned above.

4.4 Data Exclusions and Calculation of Limitations

The arsenic and mercury sampling data from Wabash failed EPA's editing criteria (LTA - long-term average test) so EPA excluded the Wabash data for both arsenic and mercury. (TDD 13-12, 13, 13-27, 13-43). Additionally, "EPA determined that the data collected at the forced circulation evaporator condensate at Polk did not demonstrate typical removal rates for pollutants generally well-treated by evaporation" and therefore found the results inadequate for use in calculating the Gasification Wastewater limits. (TDD 13-26, 27) Thus, the BAT mercury limits for the Gasification Wastewater were calculated solely from the vapor compression evaporator condensate effluent data from four days of sampling at Polk in October 2010. The BAT TDS limits for Gasification Wastewater were calculated from the four sampling events at Polk and the four consecutive sampling events at Wabash (eight sampling events total).

EPA was not able to evaluate and obtain reliable estimate of the autocorrelation for the vapor-compression evaporation treatment technology option for Gasification Wastewater because there were too few observations available. (TDD 13-20). Therefore, EPA set the autocorrelation to zero in calculating the limits. (TDD 13-20). EPA was also unable to compare weekly sampling to the monthly limitations because Polk's Gasification Wastewater was not collected frequently enough to represent weekly sampling. (TDD 13-43) Furthermore, EPA did not round the mercury limitations for Gasification Wastewater greater than 1.0 to the next higher integer as it did for all of the other FGD, Gasification, and Combustion Residual Leachate limitations, with the exception of nitrate-nitrite as N for FGD wastewater. (TDD 13-29)

4.5 Compliance Costs

EPA's evaluation of compliance costs for treatment of Gasification Wastewater to meet the BAT limitations consisted of identifying that the three currently operating IGCC units in the United States that discharge Gasification Wastewater each operate evaporation systems that are the technology basis for the ELGs for Gasification Wastewater (Polk, Wabash, and Edwardsport). (TDD 9-7) Then EPA concluded that "because all the plants are currently operating the BAT system . . . there will be no capital compliance costs associated with the control of discharges of Gasification Wastewater." (TDD 9-7) EPA did estimate the operation and maintenance (O&M) costs for the three plants related to compliance monitoring. (TDD 9-7 and 9-47)

4.6 Final ELG Limitations

After conducting the evaluation summarized above, EPA set the BAT Gasification Wastewater limitations for arsenic, mercury, selenium and total dissolved solids at the values shown in Table 2-2 in Section 2.3 of this Application.

5.0 DESCRIPTION OF FUNDAMENTALLY DIFFERENT FACTORS FOR THE EDWARDSPORT IGCC STATION

The Edwardsport IGCC Station is fundamentally different from the Polk Station and the Wabash River facility in several respects relative to the Section 304(b)(2) factors that are pertinent to EPA's development of the ELGs for Gasification Wastewater. This section describes those fundamental differences and their effects on the nature and pollutant loading to, and the nature and performance of, the grey water treatment system at Edwardsport IGCC as compared to the other facilities. However, any differences between the Edwardsport IGCC and the Wabash River facility will only be relevant to consideration of the proposed alternative limitations in lieu of the final ELGs for TDS since no effluent data from grey water treatment at the Wabash IGCC facility was considered by EPA in establishing the ELGs for mercury and arsenic.

5.1 Summary of Fundamental Differences

The following summary is provided of the fundamental differences identified by Duke Energy that support its request for alternative effluent limitations for the Gasification Wastewater discharged from the Edwardsport IGCC facility. A detailed description of the basis for each fundamental difference is then provided in subsequent subsections of this Section 5.0.

- The higher content of ash, chlorine and mercury in coal used to fuel the Edwardsport IGCC as compared to fuel used by Polk Station are fundamental differences resulting in higher pollutant loadings of mercury and TDS in Edwardsport IGCC's grey water. The same is suspected regarding fuel used at Wabash but Duke Energy was unable to obtain fuel analyses for Wabash.

- The greater contact of grey water and its precursor, black water, with raw syngas in the initial syngas cooling and cleaning processes at Edwardsport IGCC, as compared to Polk Station, is a fundamental difference resulting in higher pollutant loadings of mercury and TDS in Edwardsport IGCC's grey water.

- The inclusion in Edwardsport IGCC's grey water treatment system of scrubbers for vapors produced by the initial MVR evaporator and the CoLD crystallizer, which will extract more contaminants from those vapor streams prior to their being condensed, in contrast to Polk Station and Wabash, is a fundamental difference affecting the pollutant loading in the condensates resulting from the evaporative processes employed to treat grey water.

- The inclusion in the Edwardsport IGCC's grey water treatment system of a second crystallizer – the Formate crystallizer – will result in further concentration of the contaminants in the spent scrubber water from the two scrubbers for eventual disposal. However, use of the Formate crystallizer may, at the same time, provide another opportunity for more volatile contaminants, such as mercury, to be volatilized as constituents of the vapor stream produced by this crystallizer. These differences from the Polk and Wabash's treatment systems are fundamental differences affecting the pollutant loadings in the vapor streams prior to condensing units.

- The inclusion in the Edwardsport IGCC's grey water treatment system of a secondary, barometric condenser to extract even more potential condensable substances from the vapor streams resulting from the various evaporative units of the grey water treatment system appears to be a source of increased mercury loading to the final combined condensate stream that is the input to the RO system. This is a fundamental difference affecting the pollutant loading in the combined condensate stream resulting from the evaporative processes used for grey water treatment.

- Polk manages and utilizes the condensate stream from its initial falling film evaporator separately from the condensate from its crystallizer, while Edwardsport IGCC, in marked contrast, combines condensate streams from its initial MVR evaporator, its two crystallizers, and the barometric condenser into a single intermixed condensate stream that is sent to the RO units for final treatment prior to reuse or discharge. This difference in the manner in which Polk Station and Edwardsport IGCC configure the various condensate streams as outputs from their respective grey water treatment systems, is a fundamental difference in the engineering of the respective grey water treatment systems that affects the composition and final effluent quality for Gasification Wastewater produced by each facility.

- The fundamental differences listed above cause the effluent concentrations of mercury and TDS at the Edwardsport IGCC to be significantly higher than those produced at the Polk Station (mercury and TDS) and Wabash facility (TDS). As a result, Duke Energy anticipates that it would be required to incur significant additional capital costs to retrofit supplemental treatment equipment in its existing grey water treatment system to achieve capability to comply with the ELG limits for mercury and TDS in Gasification Wastewater. Such additional capital costs would be wholly disproportionate to the capital costs – *i.e.,* zero – considered by EPA as required for compliance with the

Gasification Wastewater ELGs in the Steam Electric ELG rulemaking. It is anticipated that additional O&M costs would be incurred, as well, in the operation of a modified treatment system.

5.2 Fundamental Differences in Fuels Used in the Gasification Process

5.2.1 Differences in Fuels Used by Polk, Wabash and Edwardsport IGCC

The type and source of fuel used by an IGCC facility can have a wide range of impacts on the operations, efficiencies, byproducts, wastes, and costs associated with these factors. Polk Station has used a blend of pet coke and coal and Wabash River has utilized pet coke for most of their respective periods of operation, while the Edwardsport IGCC has used coal.

Polk Station has operated on a variety of coals, coal blends, and petroleum coke ("Pet coke") to fuel the gasifier.[10] According to process flow diagrams of the grey water vapor compression evaporator (with sampling points identified), the gasifier was operating on a blend of 85% Pet coke/15% coal on August 19, 2010.[11] EPA noted at the time of its initial site visit at Polk Station on October 8, 2009, the fuel blend being fed to the gasifier was a blend of 70% Pet coke and 30% coal.[12] Polk is designed to gasify approximately 2,500 tons of fuel per day. [TECO 2002]

Although Wabash River was originally designed for coal to fuel for gasification, the facility has used pet coke since 2002. Wabash River gasifies 2,000 tons/day of pet coke with up to 6% sulfur content.

In contrast, the Edwardsport IGCC was designed for and uses Illinois Basin coal to fuel its gasification process. It has a design feed rate of approximately 6,100 tons per day.

5.2.2 Differences in Fuel Constituents

The following table displays the differing composition of fuels used by the Polk and Edwardsport facilities with respect to certain critical constituents:

---

[10] Polk Power Station Site Visit Presentation, October 7, 2009 (DCN SE00071A1). EPA Notes from Site Visit at Polk Station, October 8, 2009 (DCN SE00071).

[11] Appendix I of Tampa Electric Company's response to EPA's Sec. 308 request. (DCN SE01295A09 and SE01325).

[12] EPA Notes from Site Visit at Polk Station, October 8, 2009 (DCN SE00071).

Table 5-2 Fuel Comparisons

		Edwardsport[1]		Polk[2]
Fuel		Illinois Basin Coal		Coke/Coal Blend
Design Fuel Feed Rate (Tons per day)		6,100		2,500
	Units	Mid Sulfur	High Sulfur	
Total Moisture	Wt %	16.35	14.22	7.82
Ultimate Analysis				
Ash	Wt % (Dry Basis)	9.84	11.61	4.25
Chlorine	Wt % (Dry Basis)	0.03	0.04	0.02
Mercury	ug/g dry Coal	0.064	0.126	0.03

1- Appendix 3
2- (TECO, 2002): Table 5 - Feedstock Analysis

It can be seen from this table that the ash content of the coal used by the Edwardsport IGCC varies from more than two times to nearly three times that of the pet coke/coal blend used by Polk, depending on whether mid-sulfur or high sulfur coal is used. Similarly, the chlorine content of Edwardsport's coal fuel ranges from 50% to 100% higher than that of Polk's fuel blend. Thirdly, the mercury content of coal gasified by Edwardsport runs from two times to four times higher than that of the Polk pet coke/coal blend. The values from this table are used in the discussion below concerning differing impacts of ash, chlorine and mercury content of Polk and Edwardsport fuels.

5.2.3 Nature and Effects of the Fundamentally Different Fuel Factor

The noted differences in fuel composition for Polk Station and the Edwardsport IGCC lead to significant corresponding differences in pollutant content and volume of Gasification Wastewaters generated by each facility as described in the following paragraphs.

5.2.3.1 Differences in Ash Content

The amount of ash in a given fuel is directly related to the amount of slag or fly ash generated in the IGCC process. This is illustrated as follows. Based on the typical moisture content of 7.8% and ash content of 4.25 % (dry basis) of Polk's fuel, the gasification of one ton of fuel will result in approximately 0.04 ton of ash/slag.[13] In comparison, as a result of the typical moisture

[13] With a moisture content of 7.8%, one ton of fuel yields 0.922 ton of dry fuel. Since ash is 4.25% of fuel on dry weight basis, the 0.922 ton of dry fuel contains 0.039 ton of ash. This calculation method is used for the remaining constituent values discussed in Sections 5.2.3.1, 5.2.3.2 and 5.2.3.3.

content of 14.22% and ash content of 11.61% (dry basis) for high sulfur coal used by Edwardsport IGCC, the gasification of one ton of this coal will produce nearly 0.10 ton of ash/slag Thus, Edwardsport IGCC will generate around 2.5 times more ash than Polk per ton of fuel gasified by each facility when Edwardsport uses high sulfur coal. Even with medium sulfur coal, Edwardsport IGCC will produce slightly more than twice the ash produced by Polk for each ton of fuel gasified by each facility.[14]

The increase in ash content directly impacts the slag and grey water operations. As will be explained in a subsequent section on raw syngas cooling and cleaning, the greater the amount of fly ash in raw syngas, a correspondingly greater amount of ash particulate will be found in grey water associated with the gasification process. Not only does this mean higher solid particulate in the grey water but it also leads to higher dissolved solids in the grey water as the acidic grey water solubilizes a fraction of the particulate solids. As will be seen in the next section, higher dissolved solids in the recirculating grey water system for syngas processing will be likely to require an increase in the blowdown rate of grey water to the grey water treatment system.

Given the significantly higher rate of ash generated by Edwardsport IGCC's operation due to its different fuel, Edwardsport will incur higher content of particulate solids and dissolved solids in its grey water in comparison to Polk Station. **The increased levels of ash-related pollutants resulting from Edwardsport's use of Illinois Basin coal in comparison to Polk's fuel blend of pet coke/coal constitute a fundamentally different factor not considered by EPA in developing the ELGs.**

5.2.3.2 Differences in Chlorine Content

Chlorine in the coal is converted to HCl in gasifiers. This is largely removed in the syngas scrubbers and captured in the vacuum flash drum associated with the syngas cleaning process. The amount of chlorine released from the fuel, however, affects the blowdown rate for each grey water treatment system. This is because the breakdown of HCl results in formation of chlorides in the recirculating grey water system associated with the syngas scrubber. While Polk's grey

[14] Although Duke Energy did not locate fuel analyses for Wabash near the time of sampling for the ELG development, a report of testing of pet coke by Wabash in November 1997 indicates the pet coke used in the test exhibited very low ash content – less than 1% dry weight. Such fuel would be very low in ash content as compared to the coal used by Edwardsport IGCC. *See* Wabash River Coal Gasification Repowering Project – Final Technical Report, August 2000.

water treatment system is designed for 3,500 ppm chloride (TECO, 2002), Edwardsport's grey water treatment system is designed for a chloride level of 2,500 ppm.

The higher chlorine content in Edwardsport fuel (for high sulfur coal) of 0.04 percent by dry weight, is twice Polk's fuel content of 0.02 percent by dry weight. (See Table 5-2.) When the difference in moisture content of the respective fuels is taken into account, it is seen that the gasification of Edwardsport's fuel will release 86% more chlorine per ton of fuel than will the Polk fuel. However, given that Edwardsport's chlorides concentration target for its grey water treatment system is only 71% of that for the Polk treatment system, the Edwardsport recirculating grey water system will need to blow down to the treatment system at an even higher rate, compared to Polk, than would be indicated by the 86% greater chlorine content of the Edwardsport fuel. **Consequently, even if the Polk and Edwardsport IGCC facilities were designed to process fuel at the same rate, the Edwardsport IGCC would be expected to generate grey water for treatment at roughly twice the flow rate as Polk. This also represents a fundamentally different factor for the Edwardsport IGCC in comparison to the Polk Station.**

5.2.3.3 Differences in Mercury Content

The predominant source of mercury in Gasification Wastewater is the fuel that is gasified in the respective IGCC facilities. The higher mercury content in Edwardsport's fuel (for high sulfur coal) of 0.126 ppm on a dry weight basis, is more than four times that of Polk's fuel of 0.03 ppm (by dry weight). (See Table 5-2.) The mercury content of medium sulfur coal sometimes used by Edwardsport IGCC is approximately one-half that of the high sulfur coal. When the difference in moisture content of the respective fuels is taken into account, it is seen that the gasification of Edwardsport's high sulfur coal will release 3.9 times more mercury (0.098 g) per ton of fuel than will the Polk fuel (0.025 g). This substantial difference in mercury loadings from the fuels used in the respective IGCC facilities is a fundamentally different factor for the Edwardsport IGCC in comparison to Polk Station.

5.3 Fundamental Differences in Preliminary Cooling and Cleaning of Syngas

Fundamental differences were identified between Polk Station and the Edwardsport IGCC with respect to the approach used at each facility to accomplish the preliminary cooling and cleaning

of raw syngas and the manner in which these differences are likely to affect the quality of the grey water generated at each facility.

5.3.1 Syngas Cooling and Cleaning at Polk Station

As described in Section 3.1.1, raw syngas generated in Polk's gasifier passes through a radiant syngas cooler (RSC) to remove some heat from the high temperature syngas. As the syngas exits the bottom of the RSC, it passes through a Convective Syngas Cooler (CSC) which employs a noncontact heat exchanger to remove heat from the syngas, generating high pressure steam in the process that can be routed to the Heat Recovery Steam Generator (HRSG). Thus, there is no contact by the syngas with a water stream until the cooled syngas leaves the CSC and enters a scrubber to remove particulate ash, HCl and other contaminants. Grey water is employed in the scrubber. Unlike Edwardsport IGCC, Polk does not use quench water within the RSC for initial cooling or cleaning of raw syngas. As a result of the syngas scrubbing, grey water will contain particulate from fly ash and dissolved solids from interaction of the scrubber water with the fly ash and dissolved materials entrained in the raw syngas.

5.3.2 Syngas Cooling and Cleaning at Edwardsport IGCC

At the Edwardsport IGCC, raw syngas generated in the gasifiers is quenched with water in the radiant syngas cooler ("RSC") while the syngas is still at very high temperatures. Some of the quench water (also referred to as "black water") accumulating in the bottom of the gasifiers/RSCs helps transport slag from the bottom of the gasifiers. The remaining black water is drawn from the gasifiers/RSCs into a series of flashing steps, and the residual black water is routed to a solids settler. Overflow from the settler, referred to as grey water, is routed to a grey water tank. Raw syngas leaving the RSC immediately passes through a scrubber that utilizes grey water pumped from the grey water tank. This scrubbing process both further cools and removes particulates from the raw syngas stream. Arsenic, mercury, and other contaminants from the coal will become constituents of the black water and grey water streams as a result of these quenching and scrubbing operations. A fraction of the grey water is blown down from the grey water tank and routed to the GWTS for treatment as Gasification Wastewater.

5.3.3 Syngas Cooling and Cleaning at Wabash IGCC

Conceptually, the Wabash facility appears to resemble the Edwardsport IGCC more closely than the Polk facility with respect to preliminary syngas cooling and cleaning, although there are differences. Like Edwardsport, Wabash utilizes a quench process in the gasifier (first stage) to provide initial cooling and removal of particulates. It also subsequently provides for scrubbing of the syngas (second stage of gasifier) for particulate removal, also at least conceptually similar to scrubbing performed on syngas leaving the Radiant Syngas Cooler at Edwardsport IGCC. Wabash appears to add a further step than Edwardsport by routing syngas through a hot/dry filter after emerging from the syngas scrubber associated with the second stage of the gasifier.

5.3.4 Nature of the Fundamentally Different Factor Relating to Syngas Cooling and Cleaning

Edwardsport IGCC's syngas cleaning process involves considerably more direct contact of water with the syngas stream than does that used at Polk Station and, as a result, captures a greater amount of fine fly ash from the gas stream. The increased capture of fly ash particles impacts grey water operations by causing increased blow down rates to grey water treatment and increased pollutant mass brought to the grey water with the ash. The impact on grey water blow down rates varies but is dependent on how much fly ash is captured as a result of these water-based cleaning processes, as well as on chloride levels deriving from chlorine content of the coal, as discussed in a previous section.

Significantly, more volatile trace constituents of gasifier fuels, such as mercury, chloride and fluoride, are almost entirely vaporized in the gasification process and become entrained with the syngas. Some portion of such volatilized substances can be removed from the syngas stream by scrubbing processes, for example, although the removal rate is said to be affected by temperature of the syngas as it enters a scrubber as well as scrubber efficiency. As a result of the differences in cooling processes used by Polk and Edwardsport, Polk's syngas has been found to enter the syngas scrubber at about double the temperature (700°F to 800°F) as for syngas at the Edwardsport IGCC. This fact, along with the increased syngas/water contact at Edwardsport IGCC relative to Polk, suggests that Edwardsport IGCC will be more effective in capturing mercury volatilized during gasification with quench and scrubber water.

Polk does not utilize a quench process within the RSC or a spray nozzle in their syngas cleaning process. Some fly ash will drop from the syngas into a water pool at the bottom of the RSC as the syngas exits the RSC above the water pool. Also, some incidental ash removal occurs as a result of tube plugging in the CSC from ash buildup. This, however, is expected to have a *de minimis* effect on fly ash loading to the grey water.

Fine ash particles are always a problem in the coal combustion business. Fine ash particles have a tendency to cause erosion, settling issues, and carryover in processes. Polk's reliance on a syngas scrubber for removal of these particles from the syngas stream has been somewhat problematic since tests at the Polk facility have identified fine ash particles carrying over from the syngas scrubber into the COS KO Drum. (TECO, 2002) There has not been any indications of fine ash particles carrying over from Edwardsport's vapor scrubber further into the syngas cleaning process, which can be attributed to the increased scrubbing of the raw syngas stream with quench water, condensate spray, and syngas scrubbing.

The increased fly ash removal from the syngas stream achieved at Edwardsport means that the grey water will be burdened with higher volumes of fly ash particulate and ash-borne pollutants, resulting in higher rates of blow down to the GWTS for reasons discussed in Section 5.2.3 above. This represents another fundamental difference from the Polk facility whereby Edwardsport IGCC incurs increased pollutant loadings to its grey water wastestream.

5.4 Fundamental Differences in the Type and Configuration of the Evaporative Processes Employed in Treatment of Gasification Wastewater

Section 3.0 provides descriptions of the evaporative treatment systems employed by each of the three IGCC facilities for Gasification Wastewater. In this subsection, the fundamental differences between Edwardsport IGCC's GWTS as compared to those of the other facilities will be described.

5.4.1 Polk Station's Treatment of Gasification Wastewater

5.4.1.1 Type and Configuration of Polk's Evaporative Processes

The grey water treatment system at Polk Station consists of two separate evaporative processes. The first of these processes has been variously referred to as a falling film evaporator,[15] a vapor compression evaporator,[16] a brine concentrator,[17] or simply a grey water evaporator.[18] The second evaporative process is a crystallizer which is intended to further dewater the concentrated brine wastestream produced from the vapor compression evaporator. As implied above, the initial vapor compression evaporator at Polk uses falling film evaporation technology. Polk's crystallizer, however, utilizes forced circulation evaporation ("FCE") technology.

The concentrated brine wastewater from the initial vapor compression evaporator is fed to the crystallizer (or FCE unit), where this wastestream is further concentrated and dewatered. In each of the evaporative process steps, a distilled vapor is produced and is subsequently condensed.

5.4.1.2 Configuration of the Condensate Outputs of Polk's Evaporative Processes

Significantly, the Polk Station manages the condensates from the two evaporative processes of its grey water treatment system separately. Polk indicates that condensate from the vapor compression evaporator is used as pump seal water and for instrument tap purges. Condensate from the FCE crystallizer, however, is used for fuel slurry preparation.

5.4.2 Edwardsport IGCC's Treatment of Gasification Wastewater

Superficially, the GWTS used at the Edwardsport IGCC may appear similar to that used at Polk Station. However, there are fundamental differences between the two treatment systems that will be discussed in this section.

---

[15] TDD 8-5.
[16] TDD 13-4.
[17] TDD 8-5.
[18] *See*, EPA's August 31, 2010 308 request to Polk Station (DCN SE00500) and Enclosure 1 (DCN SE00500A1) to the 308 request.

5.4.2.1 Differences in Type and Configuration of Evaporative Processes at Edwardsport IGCC as Compared to Other IGCCs

In a very general sense, it can be said that the GWTS at Edwardsport IGCC uses two stages of evaporative treatment as does Polk Station. The first stage uses a mechanical vapor recompression (MVR) evaporator unit and the second stage of brine concentration occurs in a series of two crystallizers. However, Edwardsport's GWTS is considerably more complicated and robust, as is apparent from a comparison of the descriptions of the Polk and Edwardsport IGCC treatment systems in Sections 3.1.2 and 3.2.2, respectively. The following table illustrates the more significant differences.[19]

Table 5-4

Significant Differences in Grey Water Treatment		
Item	**Edwardsport IGCC**	**Polk Station**
Evaporator Type	All evaporators use forced circulation technology	Only the crystallizer uses forced circulation design. The preliminary brine concentrator is a falling film evaporator
Scrubbers	Vapor streams from the MVR evaporator and CoLD crystal-lizer are scrubbed to reduce pollutant carryover	No scrubbing of vapor streams from the evaporators is performed
Scrubber Water Concentrator	Pollutants in scrubber water are further concentrated in Formate Crystallizer	Not applicable - no scrubbers
Secondary Condenser (Barometric)	Uncondensed vapors from MVR scrubber, CoLD crystallizer scrubber, and Formate Crystallizer are run through barometric condenser	No secondary condensers are used for uncondensed vapors
Reverse Osmosis Final Polishing	Combined condensate treated with two-stage RO system	No RO provided

[19] The information in this section 5.4.2.1 is largely drawn from section 3.2.2 and/or Duke Energy Technical Memo, which is attached as Appendix 2.

The manner in which these differences affect the treatment systems and the wastewater effluents from those treatment systems at the respective facilities is perhaps less obvious. Polk's use of a falling film evaporator as its initial brine concentrator as compared to Edwardsport IGCC's use of a forced circulation MVR evaporator for the initial brine concentration step is not expected to result in substantial differences in performance in and of itself. The more significant differences are described in the following paragraph.

The greater complexity of Edwardsport's treatment system, as reflected in the inclusion of scrubbers for vapor produced by evaporators and the provision of a second crystallizer to further concentrate the liquid concentrates from the MVR unit and the CoLD® crystallizer, is driven by the following objectives. First, the inclusion of the scrubbers and the second crystallizer represents a concerted effort by Duke Energy to more fully capture and concentrate the grey water contaminants in a brine slurry that can be effectively dewatered for disposal. A second, related objective served by the scrubbers is to remove more contaminants from the vapors initially produced from the MVR evaporator and the CoLD® crystallizer prior to condensing those vapors into a distillate. At the same time, the subjection of the scrubber waters to the Formate crystallizer provides another opportunity for more volatile contaminants in the grey water to be transferred to the vapor stream produced by this crystallizer. A third objective appears to be to extract even more condensate from the uncondensed fraction of scrubbed vapors produced by the MVR evaporator and the CoLD® crystallizer through the use of a secondary condenser process employing a barometric condenser.

Recent sampling of the condensate from the barometric condenser shows the condensate to exhibit mercury concentrations ranging from 89 ng/L to as high as 350 ng/L. These values are much higher than mercury levels in other condensates resulting from the evaporation units at Edwardsport IGCC's GWTS. (See Appendix 4 for a data summary.) As a result, the barometric condenser condensate has a strong influence on the mercury concentration of the combined condensate stream from the evaporative treatment system, causing the combined condensate to have several multiples greater mercury concentration than it would have in the absence of the barometric condenser condensate.

It is inferred from these data that a significant amount of mercury in the grey water is being volatilized in the MVR evaporator, the CoLD® crystallizer, and/or the Formate crystallizer. Moreover, it is also inferred that the volatilized mercury is either (i) not effectively removed by the scrubbers or condensed in the initial condensing steps for the vapors produced by these evaporators or (ii) is re-volatilized in the Formate crystallizer. It further appears that the barometric condenser is more effective at condensing the mercury-containing compounds from the vapor streams. **The engineering and design differences of the grey water treatment system used at Edwardsport IGCC, reflected in the complexity and configuration of Edwardsport's treatment system, as compared to those employed by Polk and Wabash, has a substantial impact on the quality of the condensates produced by the treatment system and is a fundamental difference distinguishing Edwardsport IGCC from the Polk and Wabash facilities.**

5.4.2.2 Differences in the Configuration of the Condensate Outputs of the Evaporative Processes at Edwardsport IGCC

This subsection focuses on another significant difference between Polk Station and Edwardsport IGCC relating to the differing manner in which the condensate streams from the evaporative systems are managed at each facility.

As discussed briefly in paragraph 5.4.1.2, Polk Station manages the condensates from the two evaporative processes separately. Condensate from Polk's preliminary vapor compression evaporator is used as pump seal water and for instrument tap purges, while condensate from the FCE crystallizer is used for fuel slurry preparation. Although neither condensate is described as being discharged, the two condensates are managed separately and used in differing ways.

In contrast, at Edwardsport IGCC, condensate from the MVR evaporator, condensate streams from the two crystallizers, and condensate from the barometric condenser, are eventually combined and routed to the RO polishing treatment unit as a completely commingled wastestream. **Thus, the treated Gasification Wastewater at Edwardsport IGCC is a mixture or combination of condensates from the totality of the evaporative processes of the GWTS.** This difference in the manner in which the several condensate streams from the evaporator units are managed and combined or not combined for reuse or discharge, coupled

with the marked differences in treatment system components and design, **amounts to a fundamentally different factor for the Edwardsport IGCC in comparison to Polk Station.** Reasons for this conclusion are straightforward.

Reviewing briefly, the ELGs for Gasification Wastewater for the pollutants arsenic and mercury are based solely on effluent sampling of the Polk Station's grey water treatment system. Polk's simpler grey water treatment system uses only two evaporators: an initial vapor compression evaporator and a FCE crystallizer. The condensate streams from the two evaporators are managed and reused separately. Although EPA required testing of the condensate streams from both evaporators at Polk, EPA ultimately decided against use of data characterizing the condensate from the crystallizer, based on concerns whether the crystallizer was functioning properly. Thus, the ELGs for the discharge of arsenic and mercury in Gasification Wastewater are based solely on effluent quality of Polk's preliminary vapor compression evaporator that uses falling film evaporator technology. Whether or not such limits would be representative of effluent quality of Polk's crystallizer condensate is unknown, given that EPA considered the condensate data from the crystallizer to be unreliable. However, practically speaking, the question of whether the ELG limits were representative of Polk's crystallizer condensate quality was of no consequence to Polk since Polk does not discharge condensate from either evaporator to waters of the United States. Unfortunately, EPA did not consider that this question may have highly consequential ramifications for other IGCC facilities that manage their various condensate streams in a manner that differs from Polk.

A categorically different situation is presented by the Edwardsport IGCC Gasification Wastewater, since it does not consist merely of condensate from a single evaporator, such as the preliminary MVR evaporator. Rather, as recounted above, the Gasification Wastewater effluent from Edwardsport's grey water treatment system is a combination of the condensates from all three evaporators of different types, as well as the condensate from a secondary barometric condenser that receives uncondensed vapor fractions from all three evaporators. Edwardsport's grey water treatment system effluent is more comparable to the combination of the condensates from Polk's initial vapor compression evaporator and its crystallizer. However, the ELG limits for Gasification Wastewater cannot be said to be representative of this combined condensate since EPA did not include data characterizing Polk's crystallizer condensate in its calculation of

the Gasification Wastewater ELGs. Similarly, the Gasification Wastewater ELGs cannot be considered representative of the combined condensate wastestream from Edwardsport's complex grey water treatment system. While this is a straightforward conclusion, cogent support for it is contained within the Technical Development Document for the final ELGs as explained in the following section.

5.4.2.3 The ELGs for Gasification Wastewater Are Not Representative of the Combined Condensate Effluent of Edwardsport IGCC's GWTS

Regardless of the specific evaporative technology used in the initial evaporator in Edwardsport's grey water treatment system – the MVR evaporator,[20] it would be inappropriate and problematic for the final treated grey water wastestream, consisting of a combination of condensate from the MVR evaporator, condensate from the two FCE crystallizers, and condensate from the barometric condenser, to be subjected to the ELGs for Gasification Wastewater. This is because the Gasification Wastewater ELGs have been derived solely from pollutant data drawn from condensate from Polk's falling film evaporator, as discussed above in section 4.0, and their development did not include or reflect any data representative of the pollutant concentrations of condensate produced by Polk's FCE crystallizer. EPA made the following statement in its Effluent Limitation Memo:[21]

> If EPA was to calculate limits using the data at the forced circulation evaporator condensate, it would follow the same methodology used to calculate the limits for vapor compression evaporator condensate data.

Since EPA did not establish effluent limitation guidelines for Gasification Wastewater that includes or consists of FCE crystallizer condensate, the ELGs for Gasification Wastewater cannot be said to be representative of and should not be applicable to the fundamentally different Gasification Wastewater of the Edwardsport IGCC that includes condensate from multiple evaporators of different types, including crystallizers, as well as condensate from a barometric condenser. This conclusion is even more compelling given the following statements concerning

[20] The MVR evaporator at Edwardsport IGCC utilizes FCE technology.

[21] EPA Memorandum entitled "Effluent Limitations for FGD Wastewater, Gasification Wastewater . . . for the Proposed Effluent Limitation Guidelines and Standards for the Steam Electric Rulemaking", p. 54, October 20, 2012. DCN SE 01999.

EPA's consideration of vapor compression evaporation technology as a potential candidate for the selected treatment option for FGD wastewater:[22]

> EPA based the limitations for the vapor-compression evaporation technology option on the effluent data at Brindisi [Italy]. The treatment system for the Brindisi power plant actually produces two effluent streams: (1) brine concentrator distillate; and (2) crystallizer condensate. Both of these streams are essentially the condensed steam from different stages of the evaporation process. . . . it is possible that a plant may choose to reuse both streams, . . . discharge both streams, or reuse one stream while discharging the other to surface water. **The effluent quality for the brine concentrator distillate and the crystallizer condensate are not identical.** . . . EPA also considered establishing two sets of effluent limitations, one effluent stream. Although technically feasible . . . EPA determined that establishing separate limitations for the [two] effluent streams is unnecessarily burdensome and is not necessary to ensure the FGD wastewater is being treated to the effluent quality achievable by operation of the evaporation technology. Thus, EPA established a single set of effluent limitations that applies to all FGD wastewater prior to discharge (whether as a single stream, combined stream, or multiple streams) and concluded this single set of effluent limitations is sufficient to ensure the appropriate level of control would be achieved. **Because the effluent quality of the two effluent streams is not identical, EPA established the limitations based on the stream with the higher pollutant concentrations: crystallizer condensate. Setting the limitations on the higher concentration stream is necessary** to ensure plants operating a well-designed and well-operated evaporation system can meet the limitations, regardless of whether they sample the effluent streams separately or as a combined stream.

[*Emphasis added.*]

In concluding that condensate from both of Brindisi's evaporative treatment units must be evaluated and considered in establishing the effluent limitation guideline for FGD Wastewater, EPA unambiguously enunciated a broader principle that where a treatment process creates two wastestreams of differing quality and only a single set of effluent limits are to be established, the limitations necessarily will be based on the wastestream with the higher pollutant concentrations.

Had EPA followed this principle in setting the ELGs for Gasification Wastewater, the limits would have been set on the basis of effluent data from the IGCC wastewater with the higher pollutant concentrations, whether that is crystallizer condensate or vapor compression

[22] (TDD 13-25, 26). Moreover, evaporation treatment technology, based on the higher pollutant concentrations of the condensate from the Brindisi crystallizer, was selected by EPA as the technical basis for best demonstrated control technology for new source performance standards for FGD Wastewater

condensate. Since EPA did not have what it considered reliable data from Polk for crystallizer condensate, it set the ELGs for Gasification Wastewater for arsenic and mercury solely on the basis of data from condensate from Polk's vapor compression evaporator without knowing whether the pollutant concentrations for this condensate were the higher of the two wastestreams or not. The ELGs cannot be considered representative of the effluent from the GWTS at Edwardsport IGCC, which is a combination of condensates from the MVR evaporator, two crystallizers, and the barometric condenser, even if there were no other fundamentally different factors distinguishing the Edwardsport IGCC from Polk or Wabash. Thus, the nature and configuration of the GWTS and its effluent stream at Edwardsport IGCC must be considered a fundamentally different factor from that of the Polk Station's grey water treatment system as considered by EPA in setting the ELGs for Gasification Wastewater.

5.4.3 Wabash IGCC

While the Polk grey water treatment system is markedly less robust than that installed at the Edwardsport IGCC facility, Wabash's grey water treatment system is even less so. Wabash's treatment system consists of a single evaporator, omitting a second stage crystallizer and instead using a rotary drum dryer to further dewater brine concentrate from the single evaporator unit.

Wabash does not employ a scrubber to remove contaminants vaporized in the evaporator prior to condensation of the vapor stream leaving the evaporator. Also, any contaminants in the brine concentrate that are evaporated in the rotary drum dryer are simply lost to the atmosphere. Wabash, like Polk, does not attempt to capture such contaminants with a barometric condenser as employed by Edwardsport IGCC for that purpose.

Clearly, the grey water treatment system used by Edwardsport IGCC is fundamentally different in its design, configuration and capability of capturing and removing the pollutants of concern from raw grey water when compared with the Wabash treatment system.

5.4.4 Nature of the Fundamental Differences Associated with Treatment of the Gasification Wastewaters

The fundamental differences relating to this topic have been discussed within preceding subsections of Section 5.4.

6.0 DUKE ENERGY'S FDF VARIANCE APPLICATION MEETS STATUTORY ELIGIBILITY FACTORS

6.1 Statutory Prerequisites to an FDF Variance

The authority of EPA to establish case-specific alternative requirements to national effluent limitation guidelines, based on a particular industrial source being fundamentally different with respect to factors (other than cost) specified by CWA Section 304(b), was expressly incorporated into the Clean Water Act as Section 301(n), 33 U.S.C. §1311(n), by the 1987 amendments to the Act. Four prerequisites to the grant of such alternative requirements are specified in Section 301(n)(1) as paragraphs (A) through (D). A fifth prerequisite is stated in Section 301(n)(2). This section of the Application outlines why Duke Energy's request for such alternative requirements from the ELGs for Gasification Wastewater satisfies the statutory prerequisites.

6.2 Duke Energy's Application Satisfies the Statutory Prerequisites

6.2.1 Fundamentally Different Factors

In Section 5.0 above, Duke Energy has identified several fundamental differences at its Edwardsport IGCC plant that pertain to factors from CWA Section 304(b)(2)(B) concerning the nature or the quality of pollutants contained in its raw waste load, based on the differences in the fuel utilized and gasification processes employed, and the engineering aspects of the application of control technology at the Edwardsport IGCC, in comparison to such factors as they pertain to Polk Station or Wabash River, the facilities considered by EPA in establishing the ELGs for gasification wastewater.

6.2.2 Information Base for Application

This Application is based on (i) information and supporting data that was submitted to EPA during the promulgation of the ELGs and (ii) information and supporting data that Duke did not have a reasonable opportunity to submit during the rulemaking given that the Edwardsport IGCC facility was still in the planning phase, under construction, and/or just starting operations during the promulgation of the rulemaking.

6.2.3 The Proposed Alternative Limitations No Less Stringent than Justified by the Fundamental Difference

The alternative BAT effluent limitations proposed by Duke Energy for arsenic, mercury and total dissolved solids in the Gasification Wastewater discharged from Edwardsport IGCC's grey water treatment system are no less stringent than justified by the fundamental differences. As described in Section 7.0 of this Application, the alternative limits have been calculated from analytical data obtained from Edwardsport IGCC's grey water treatment system, using the same statistical model used by EPA to calculate the ELG limits for Gasification Wastewater. Given the use of EPA's statistical model for the calculations and the fact that the Edwardsport IGCC data inherently reflect the impact of the fundamental differences affecting Edwardsport's grey water, the proposed alternative limits are no less stringent than justified by the fundamental differences.

6.2.4 The Proposed Alternative Limitations Will Not Result in Markedly More Adverse Non-Water Quality Environmental Impacts

The alternative effluent limitations proposed by Duke Energy will not result in a non-water quality environmental impact which is markedly more adverse than the impact considered by U.S. EPA in establishing the guidelines and standards. If anything, Duke Energy believes that its grey water treatment system removes more mercury from uncondensed vapors leaving the grey water treatment process compared to other facilities – vapors that appear to be simply vented to the atmosphere at other facilities. While it is likely that Edwardsport IGCC will generate higher amounts of ammonium chloride and other solids from its grey water than do other facilities as a result of the more aggressive brine concentration capabilities of its grey water treatment system, those byproducts are marketed rather than landfilled.

6.2.5 The Application is Timely

This Application is being submitted within 180 days after November 3, 2015, the date on which the ELGs for Gasification Wastewater were established by publication in the Federal Register.

7.0 PROPOSAL FOR ALTERNATE BAT EFFLUENT LIMITATIONS FOR EDWARDSPORT IGCC STATION'S GASIFICATION WASTEWWATER

In this Application, Duke Energy requests a Fundamentally Different Factors Variance from the BAT effluent limitations for Gasification Wastewater established by EPA in the Steam Electric ELGs as codified in 40 CFR 423.13(j)(1). To implement the requested variance, Duke requests alternative BAT effluent limitations for the Gasification Wastewater generated by the Edwardsport IGCC facility. Specifically, alternative BAT effluent limitations are requested for arsenic, mercury and total dissolved solids (TDS). Alternative effluent limitations for selenium are not requested for the Edwardsport IGCC facility. Duke's proposed alternative effluent limitations are set forth in Table 7.1 below.

7.1 Basis of Duke Energy's Requested Alternative Effluent Limitations

The proposed alternative BAT effluent limitations for mercury and TDS are calculated from analytical data obtained from the grey water treatment system at the Edwardsport IGCC facility, using the same statistical model used by EPA to calculate the ELG limits. More specifically, Duke Energy's consultant, AECOM, recalculated the BAT effluent limits for mercury and TDS using the EPA delta-log-normal distribution method.[23] The dataset from the Edwardsport IGCC facility used by AECOM to calculate the proposed alternative BAT effluent limitations are included in Appendix 1 to this Application.

Duke Energy believes that the use of data characterizing the Gasification Wastewater solely from the Edwardsport IGCC facility to calculate the proposed alternative effluent limitations for mercury and TDS is inherently consistent with the fundamentally different factors identified in this Application. EPA has recognized that the Edwardsport IGCC facility treats its Gasification Wastewater through use of the model technology identified by EPA in the Steam Electric ELGs for Gasification Wastewater: vapor-compression evaporation technology. (TDD 7-52, 8-16, 17) Consequently, the effluent quality of Edwardsport IGCC's GWTS, based on the changes in

[23] AECOM has tested its application of the EPA statistical method using only the Polk and Wabash data used in the final rule, and exactly reproduced the EPA daily maximum limits for gasification wastewater. AECOM was able to reasonably reproduce the EPA monthly average results; however, EPA calculates the monthly average limit using randomly generated numbers for the monthly averages, and has not revealed exactly how these numbers were generated. Therefore, the EPA monthly average re-calculations by AECOM are slightly different than the EPA limits.

effluent quality deriving from the identified fundamental differences, including but not limited to the fundamental difference consisting of the combination of condensate streams from the entire evaporative treatment system into a single effluent stream at Edwardsport, should be used to determine the alternative effluent limitations for mercury and TDS. This logically follows from both technical and legal perspectives. As a result of the fundamentally different factors, the effluent quality from the grey water treatment system at the Edwardsport IGCC facility differs markedly with respect to mercury and TDS content from Gasification Wastewater effluent sampled by EPA at the Polk and Wabash River plants and used in developing the Steam Electric ELGs.

7.2 Proposed Alternative BAT Effluent Limitations

Duke Energy's proposed alternative BAT effluent limitations for Gasification Wastewater discharged from the Edwardsport IGCC facility are set forth in the following table.

Table 7.2 Alternative BAT Effluent Limitations for Gasification Wastewater at Edwardsport IGCC

Pollutant	Daily Maximum	30-day Average
Arsenic, total (ug/L)	8.0	--
Mercury, total (ng/L)	30	12.4
TDS (mg/L)	78	36
Selenium, total (ug/L)	453	227

Explanation of the proposed alternative effluent limitations:

Arsenic: the alternative effluent limitations are based on a modified protocol for setting limitations where all effluent data are below the limit of quantification. The modified protocol is described below.

Mercury and TDS: the alternative effluent limitations are calculated, as described above, from effluent data from the grey water treatment system at Edwardsport IGCC using EPA's statistical methodology.

Selenium: no change is proposed from the BAT effluent limitations in the Steam Electric ELGs.

Modified protocol proposal for setting effluent limits for arsenic. Arsenic was not detected in Gasification Wastewater sampling from the Polk facility used by EPA to generate the arsenic limits. Similarly, except for one apparent outlier, arsenic (total) has not been detected in Edwardsport IGCC's treated grey water effluent. In the Steam Electric ELGs, EPA set the

arsenic limit at the quantitation limit of 4.0 ug/L (for the laboratory used for the sample analyses) since arsenic was not detected in the gasification data used by EPA from the Polk facility. However, Duke Energy proposes that use of the quantitation limit as the regulatory limitation in this circumstance is unduly restrictive since scenarios are possible in which all sample data were below the quantitation limit but a calculated limit would be higher than the quantitation limit under the statistical model methodology. To illustrate, AECOM conducted a calculation using a series of four hypothetical values, all below the quantitation limit for arsenic (1, 2, 3, and 3.5 ug/L). The results calculated from this hypothetical dataset produced a daily maximum limit of 8 ug/L. Consequently, Duke Energy proposes that an alternative effluent limit of 8 ug/L for arsenic, as recommended by AECOM, would be more reasonable.

7.3 Duke Energy's Proposed Alternative Effluent Limitations Are Consistent with Regulatory Requirements

7.3.1 The Proposed Alternative Effluent Limitations Will Assure Compliance with Water Quality-Based Effluent Limitations

Mercury. The alternative effluent limitations for mercury as proposed by Duke Energy in this Application are calculated from data that are representative of current effluent quality from the grey water treatment system in use at the Edwardsport IGCC Station. Effluent from the grey water treatment system is typically reused as part of the make-up water for the recirculating cooling tower system for the gasification process. Blowdown from that cooling system, a portion of which is treated grey water, is discharged to the final settling ponds where it commingles with other wastestreams prior to discharge from Outfall 002 to the West Fork of White River.

NPDES Permit No. IN0002780 (the "NPDES Permit"), which authorizes discharge, as reissued on March 30, 2016, imposes the following effluent limits for mercury in the discharge from Outfall 002 of the Edwardsport IGCC Station:

	Monthly Average	Daily Maximum
Mercury	12 ng/L	20 ng/L

Compliance with the specified limits is determined by use of EPA Test Method 1631, Revision E. The same effluent limitations for mercury at Outfall 002 were imposed in the previous

NPDES permit for Edwardsport IGCC Station issued in 2010. Edwardsport IGCC Station has routinely complied with these effluent limitations for mercury.

The Fact Sheet for the recently reissued NPDES Permit specifies that the effluent limits for mercury included in the permit are water quality-based effluent limits (WQBELs), which are effluent limits derived from, and designed to assure compliance with, Indiana's water quality standards that are applicable to waters of the State located outside the Great Lakes Basin.[24] Aside from the referenced water quality standards, there are no other water quality standards, treatment standards or schedules of compliance within the scope of CWA Section 301(b)(1)(C) applicable to the discharge of mercury from Edwardsport IGCC Station.

Consequently, it can be concluded that the alternative effluent limits for mercury proposed in this Application will provide for compliance with the existing WQBELs set for mercury in the NPDES Permit. A copy of an excerpt of the NPDES Permit with the mercury effluent limitations for Outfall 002 and an excerpt of the Fact Sheet for the Permit showing such mercury limit to be a WQBEL are included in Appendix 5 to this Application.

Total Dissolved Solids. The alternative effluent limitations for TDS as proposed by Duke Energy in this Application are calculated from data that are representative of current effluent quality from the grey water treatment system in use at the Edwardsport IGCC Station. As discussed above, effluent from the grey water treatment system is typically reused as part of the make-up water for the recirculating cooling tower system for the gasification process. The blowdown from that cooling system, which includes a portion of the treated grey water, is routed to the final settling ponds and, after commingling with other Station wastestreams, discharges from Outfall 002.

The NPDES Permit does not impose effluent limits for TDS at Outfall 002. This is because Indiana water quality standards for waters of the state outside the Great Lakes Basin do not include numeric water quality criteria for TDS except for a standard of 750 mg/L that applies only at the point of withdrawal from waters of the state for purposes of providing a public water supply or an industrial water supply.

---

[24] See 327 IAC 2-1-6.

7.3.2 The Proposed Alternative Effluent Limitations Will Assure Compliance with Section 208(e) of the CWA

Section 208(e) of the CWA provides, in essence, that no NPDES permit shall be issued for a point source which conflicts with an areawide waste treatment management plan approved under subsection (b) of Section 208. Duke Energy confirms that the modification of the NPDES Permit to incorporate the proposed alternative effluent limitations requested under this Application will not conflict with an applicable areawide waste treatment management plan.

8.0 RESERVATION OF RIGHTS

Duke Energy reserves the right to correct any information obtained and relied upon from EPA's Rulemaking Docket for the Steam Electric Power Generating Effluent Limitations Guidelines, EPA-HQ-OW-2009-0819, that is either incorrect, incomplete, or otherwise needing clarification and understands that CWA Section 301(n)(4), establishes a mechanism to provide such information until the earlier of the date the Application is approved or denied, or the last day that EPA has to approve or deny the Application. Furthermore, Duke Energy understands that it may be necessary to supplement the Application utilizing the same submittal parameters, should information that was otherwise classified as confidential business information become available, and/or it becomes necessary for Duke Energy to supplement the Application with other information or data. Duke Energy understands that if any portion of this Application is found to be based on incorrect and/or outdated information included in EPA's Rulemaking Docket for the Steam Electric Power Generating Effluent Limitations Guidelines, EPA-HQ-OW-2009-0819, the remaining portions shall not in any way be affected or impaired thereby.

9.0 CONCLUSION

Duke Energy has identified several fundamental differences between its Edwardsport IGCC facility and the Polk and Wabash River facilities evaluated by EPA in establishing the Steam Electric ELGs for Gasification Wastewater. These fundamental differences relate to and affect (i) the various pollutant loadings to gasification wastewater generated at the Edwardsport IGCC and (ii) the engineering aspects of the design and configuration of the grey water treatment system at the Edwardsport IGCC in comparison, in both cases, to the other two facilities. Moreover, the Edwardsport IGCC's grey water treatment system is fundamentally different from that of Polk Station with respect to the gasification wastewater outputs, since Edwardsport IGCC's final effluent consists of the combination of all condensate streams from that evaporative treatment system, while the condensate from Polk Station's initial, falling film evaporator, which is only a portion of the condensate generated from the entire Polk evaporative treatment system, forms the sole basis of EPA's development of the Gasification Wastewater ELGs for the pollutants arsenic and mercury. This Application satisfies the statutory prerequisites of CWA Section 301(n) for the grant of a fundamentally different factor variance. Consequently, Duke Energy respectfully requests that the EPA, with the concurrence of the Indiana Department of Environmental Management, grant the fundamentally different factors variance requested in this Application and approve the alternative BAT effluent limitations proposed in this Application in lieu of the BAT ELGs for Gasification Wastewater that will otherwise apply to the discharge of Gasification Wastewater by Edwardsport IGCC Station.

10. CERTIFICATION

I certify under penalty of law that this document and all attachments were prepared under my direction or supervision in accordance with a system designed to assure that qualified personnel properly gather and evaluate the information submitted. Based on my inquiry of the person or persons who manage the system, or those persons directly responsible for gathering the information, the information submitted is, to the best of my knowledge and belief, true, accurate, and complete. I am aware that there are significant penalties for submitting false information, including the possibility of fine and imprisonment for knowing violations.

Submitted by:
DUKE ENERGY INDIANA, LLC

By: Joseph W Donahue
Joseph Donahue
Vice President, Edwardsport IGCC

Date: April 27, 2016

APPENDICES:

Appendix 1: 2013 and 2015 Data from Edwardsport IGCC Grey Water Treatment System

Appendix 2: Duke Energy Technical Memorandum on Edwardsport IGCC – Fundamentally Different Factors Request (April 2016)

Appendix 3: Coal Analyses for Edwardsport IGCC Station

Appendix 4: Condensate Streams and Final Effluent Data – April 2016 Edwardsport IGCC Grey Water Treatment System

Appendix 5: Excerpts from NPDES Permit No. IN0002780 issued March 30, 2016 and Accompanying Fact Sheet

Appendix 1

2013 and 2015 Data from Edwardsport IGCC Grey Water Treatment System

Appendix 1: 2013 and 2015 Data from Edwardsport IGCC Grey Water Treatment System

	Mercury, ng/l			Arsenic, ug/l			TDS, mg/l		
	Filtered	Influent	Effluent	Filtered	Influent	Effluent	Filtered	Influent	Effluent
ELG daily max / 30-day avg.			1.8 / 1.3			4 / -			38 / 22
5/9/2013						<0.06			
5/23/2013						<0.06			
6/6/2013						<6			
6/13/2013						<6			
7/22/2013			2.08						
7/24/2013						2			
7/31/2013						<0.6			
8/2/2013						<0.6			
8/8/2013			9.58						
8/25/2013						15			
9/5/2013						<0.06			
9/25/2013						<0.06			
10/3/2013			2.53						
10/8/2013						<0.6			
10/17/2013						<0.6			
9/8/2015	0.540	6.55	12.8	<1.0	1,100	<1.0	300	2,540	20
9/10/2015	<0.50	15.8	5.25	<1.0	120	<1.0	300	3,020	40
9/15/2015	<0.50	10.8	10.3	<2.0	120	<2.0	120	2,560	<10
9/17/2015	<0.50	21.2	6.55	<2.0	130	<2.0	280	2,090	20
9/22/2015	<0.50	22.0	10.8	<1.0	31	<1.0	324	2,200	10
9/24/2015	<0.50	23.4	11.5	<1.0	63	<1.0	322	2,140	<10
9/29/2015	<0.50	44.4	6.40	<1.0	67	<1.0	420	2,700	32
10/1/2015	<0.50	7.35	3.92	<1.0	42	<1.0	336	2,980	20
10/6/2015	<0.50	15.6	2.40	<1.0	33	<1.0	340	2,680	20
10/8/2015	<0.50	11.8	5.79	<1.0	38	<1.0	380	1,660	14
10/13/2015	<0.50	30.4	3.05	<1.0	210	<1.0	320	2,230	222
10/15/2015	<0.50	59.5	0.877	<1.0	230	<1.0	340	2,120	60
Maximum	**0.54**	**59.5**	**12.8**	**<2.0**	**1,100**	**15**	**420**	**3,020**	**222**
Average	**<0.50**	**22.4**	**6.3**	**<1.2**	**182**	**1.9**	**315**	**2,410**	**39.8**
Minimum	**<0.50**	**6.55**	**0.9**	**<1.0**	**31**	**<0.1**	**120**	**1,660**	**<10**
Count	**12**	**12**	**15**	**12**	**12**	**24**	**12**	**12**	**12**

Appendix 2

Duke Energy Technical Memorandum on Edwardsport IGCC – Fundamentally Different Factors Request (April 2016)

Appendix 2

Edwardsport IGCC - Fundamentally Different Factors Request

Technical Memorandum April 2016

Abstract

On September 30th, 2015, the U.S. Environmental Protection Agency finalized an update to the Steam Electric Power Generating Effluent Limitations Guidelines (ELGs), establishing federal limits on several pollutants, including but not limited to, metals in certain waste waters that are discharged to surface water from steam electric generating facilities. The Edwardsport Integrated Gasification Combined Cycle (IGCC) Station is subject to regulation under the ELGs' effluent limits for gasification wastewater. However, EPA evaluated only Tampa Electric Company's Polk Station ("Polk") and Wabash Valley Power Association's Wabash River station ("Wabash River") as the basis for its determination of vapor-compression evaporation as the technology option for treatment of gasification wastewater and its calculation of effluent limits in the ELGs for that wastewater stream. This was due to the Edwardsport IGCC not being in commercial operation at the time of EPA's sampling program. (EPA, 2015)

Edwardsport IGCC is fundamentally different from the Polk and Wabash River facilities on which the ELGs were based, making it impossible for Edwardsport IGCC to comply with the ELG limits for gasification wastewater. These fundamental differences derive from different gasification processes and a different grey water treatment system configuration utilized by Edwardsport IGCC in comparison to those employed by Polk and Wabash River.

General Overview of IGCC Facilities

Edwardsport IGCC has more than twice the generation capacity of the two IGCC facilities evaluated by EPA. General information on the known IGCC facilities mentioned in the ELGs is outlined in table below.

Table 1: IGCC Facilities

	MW (net)	Commercial Operation	Location	Gasifiers	By Product Produced
Edwardsport	618	Jun-2013	Edwardsport, IN	2	Elemental Sulfur
Polk	250	Sep-1996	Polk County, FL	1	Sulfuric Acid
Wabash River	262	Dec-1999	Terre Haute, IN	1	Elemental Sulfur

Polk and Wabash River have had more than a decade to go through their gasification and environmental control systems to provide necessary modifications and improvements. Polk indicates

however that even after six years of operation, several capital improvements have been required, renovations were in progress or planned, and O&M costs were higher than anticipated in getting the gasification system functional and compliant. (TECO, 2002)

Different Fuels

The type and source of fuel used by an IGCC facility have a wide range of impacts on costs, byproducts, operations, and even public perception. Edwardsport IGCC commonly uses a fuel source mainly consisting of Illinois Basin Coal, which can contain medium to high amounts of sulfur. Polk predominately utilizes a pet coke/coal blend as fuel. Several fuel parameters of note are outlined in Table 2 below.

Table 2 - Coal Ultimate Analysis

		Edwardsport		Polk[1]
Fuel		Illinois Basin Coal		Coke/Coal Blend
Coal Design (Tons per day)		6,100		2,500
	Units	Mid Sulfur	High Sulfur	
Total Moisture	Wt %	16.35	14.22	7.82
Ultimate Analysis				
Ash	Wt % (Dry Basis)	9.84	11.61	4.25
C	Wt % (Dry Basis)	74.81	72.89	82.88
H	Wt % (Dry Basis)	5.16	5.17	4.5
N	Wt % (Dry Basis)	1.57	1.51	1.85
S	Wt % (Dry Basis)	2.31	3.79	2.99
O	Wt % (Dry Basis)	6.31	5.03	3.53
Cl	Wt % (Dry Basis)	0.03	0.04	0.02
Mercury	ug/g dry Coal	0.064	0.126	0.03

1- (TECO, 2002): Table 5 - Feedstock Analysis

The differences in fuel selection utilized for normal operations at Polk and Edwardsport IGCC are mostly driven by economics. The Edwardsport IGCC is located in an area where Illinois Basin coal is widely available, while Polk's fuel selection is driven by availability of multiple fuel sources and an objective of extending the lifespan of the refractory liner in its gasifier. (TECO, 2002) Several characteristics of the fuel utilized at each facility displayed in the table above have impacts on design and operation of the facilities.

Ash Percent

The amount of ash in a given coal impacts the amount of slag or fly ash generated in the IGCC process. The composition of slag and fly ash is directly dependent on the characteristics of the fuel. (General reference) Edwardsport IGCC is designed to burn approximately 6,100 tons of coal per day. The smaller Polk facility is designed for approximately 2,500 tons per day of fuel, which would generate about 98 tons per day of ash. (TECO, 2002) In contrast, the high ash content of the high sulfur coal sometimes used by the Edwardsport IGCC, as shown in Table 2, will result in about 608 tons per day of ash generated, about six times more than Polk does.

The increase in ash content impacts the slag and grey water operations. It is ideal for majority of the ash to be removed in the slag handling process to mitigate the amount of solids carried over into the settler system. The overflow from settler system is classified as grey water. An increase in fly ash particles into the settler system can cause system upsets or an increase in dissolved solids, requiring increase blowdown from settler system into the grey water treatment system.

Chlorine Percent

Chlorine in the coal is converted to HCl in the gasifier. This is later removed in the scrubbers and captured in the vacuum flash drum, common to both Polk and Edwardsport IGCC. The amount of chlorine though affects the blowdown for each grey water treatment system. Polk designed for 3,500 ppm chloride in their grey water treatment system. (TECO, 2002) Edwardsport designed for 2,500 ppm chloride concentration. The higher chlorine content in Edwardsport fuel of 0.04 percent by weight, is twice Polk's fuel content of 0.02 percent by weight, resulting in double the amount of chlorine entering the gasification process.

If both stations operated at their respective design fuel feed rates, four times the amount of chlorine would be entering the Edwardsport gasifier process in comparison to Polk. The higher dissolved solids from the chlorine content would result in fewer cycles in the grey water system and a correspondingly higher blowdown rate to the grey water treatment system. Edwardsport normally blows down grey water from its recirculating grey water system at a rate of 450 gpm, but is capable of adjusting up to 750 gpm max in the event necessary. Polk is designed to blowdown around 100gpm, but has indicated issues with managing their water inventory at this design flow. (TECO, 2002)

Mercury Content

Mercury has become a major constituent of concern in the coal industry with respect to air and waterside impacts. The predominant source comes from the fuel burned. The mercury content in Edwardsport's fuel can range from 0.064 to 0.126 micrograms per gram of coal. The average mercury content in Polk's fuel is around 0.03 micrograms per gram of coal. (TECO, 2002) As a result, Edwardsport's fuel contains approximately two to four times the amount of mercury in comparison to Polk's fuel.

Syngas Cleaning

After gasification occurs, a syngas cleaning process is used to remove residual fly ash particles and HCl from the raw gas stream. Polk's syngas cleaning process, outlined in Figure 1 below, starts when the syngas makes a sharp turn at the base of the Radiant Syngas Cooler, whereupon it enters the Convective Syngas Cooler (CSC). High-pressure boiler feed water is circulated by natural convection in the CSC's heat exchanger to remove heat from the syngas and is utilized later in other processes. The cooled syngas leaves the CSC, entering the Syngas Scrubber, where several process condensate contact steps in series occur to remove any particulate carryover and HCl from the scrubbed gas. (TECO, 2002) Blowdown and condensate from the scrubber is a source of grey water.

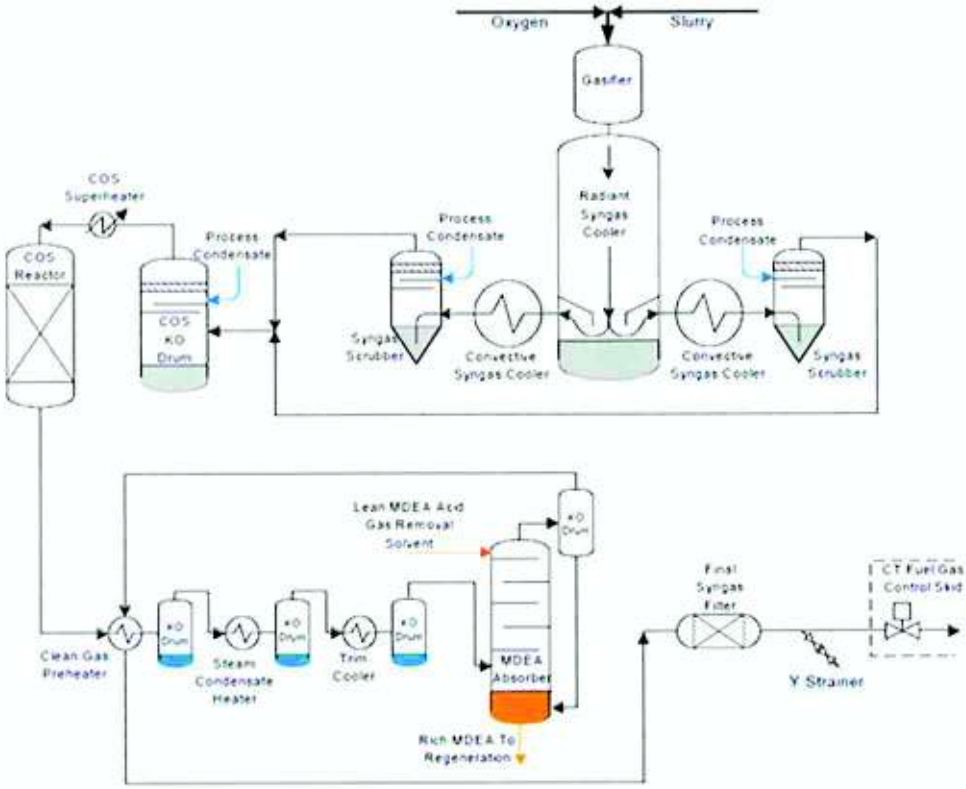

Figure 1 - Polk Syngas Cleaning (TECO, 2002)

Edwardsport IGCC utilizes a different approach in the cleaning of syngas. Raw syngas passes through quench water in the radiant sump of the Radiant Syngas Cooler (RSC) to cool and saturate the hot syngas, as well as capture particulates. After the RSC, syngas enters the Nozzle Scrubber and Syngas Scrubber where upon process water, mainly consisting of grey water, black water, and process condensate utilized to further capture any fly particles or HCl.

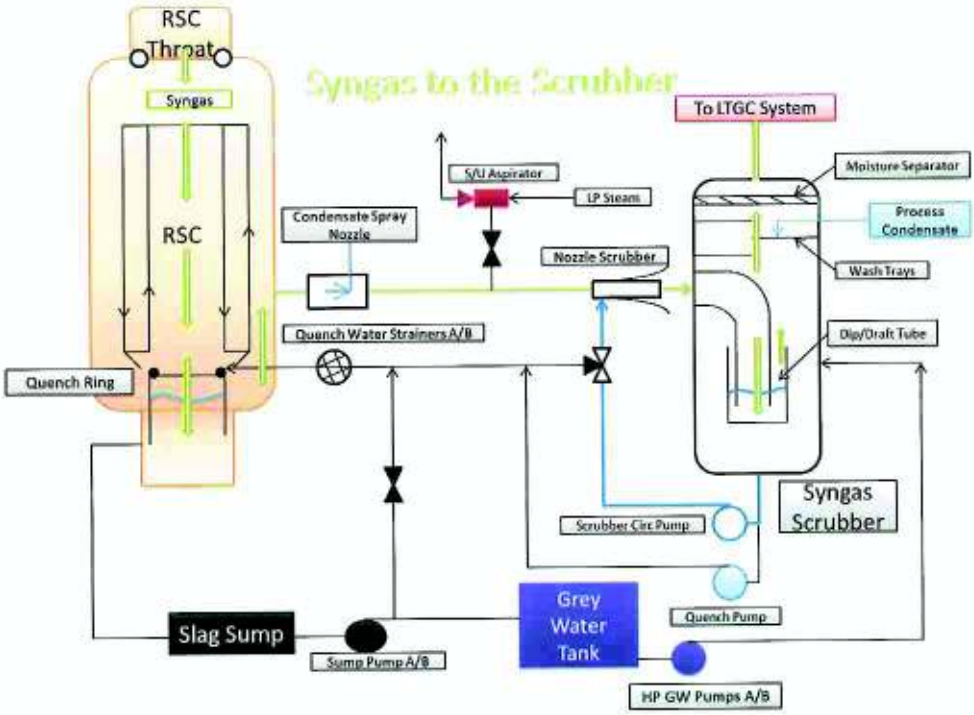

Figure 2 - Edwardsport Syngas Scrubber

Edwardsport IGCC's syngas cleaning process benefits from the increased direct contact of water with the syngas stream, which greatly increases the capture of fine fly ash in the gas stream as well as any volatilized mercury. The increase capturing of fly ash particles impacts grey water operations by influencing blow down rates and the increased pollutant mass brought to the grey water with the ash. The impact on grey water blow down rates varies but is dependent on how much fly ash is captured as a result of quench ring, spray nozzle, and syngas scrubber operations, as well as on chloride levels deriving from chlorine content of the coal.

Polk does not utilize a quench process within the RSC or a spray nozzle in their syngas cleaning process and relies solely on the syngas scrubber for ash particle removal. Some of the ash is captured in their CSC because of tube plugging, which has been indicated as a periodic maintenance activity. (TECO 2002) The ash captured in Polk's CSC does not affect grey water operations since it is removed during maintenance activities. Edwardsport does not have a convection cooler and consequently does not remove ash through such a maintenance activity. Thus, ash that would have been captured in a CSC like Polk's if Edwardsport had included a CSC, is mainly captured in the RSC sump or syngas scrubber.

Fine ash particles are always a problem in the coal combustion business. Fine ash particles have a tendency to cause erosion, settling issues, and carryover in processes. Polk reliance on a vapor scrubber for removal of these particles in syngas stream first appeared positive. However, tests at their facility indicated fine ash particles carrying over from the syngas scrubber into the COS KO Drum. (TECO, 2002) There has not been any indications of fine ash particles carrying over from Edwardsport's vapor scrubber further into the syngas cleaning process, which can be attributed to the increased scrubbing of the raw syngas stream with quench water, condensate spray, and syngas

scrubbing. At the same time, the increased ash removal from the syngas stream achieved at Edwardsport means that more ash and ash-borne pollutants will impact the grey water.

In the gasification process, several more volatile substances such as Hg, Cl, and F are almost entirely vaporized. The removal of these volatized substances from the raw syngas stream is impacted by temperature and scrubbing of the syngas. (EPRI, 1996) As mentioned above in regards to ash being captured in the Polk vs. Edwardsport syngas cleaning process, the increased cooling and scrubbing of the Edwardsport IGCC's syngas results in more volatilized metals being captured. Polk's syngas leaves the RSC sump below 1,350°F and leaves their CSC between 700°F to 800°F. (TECO, 2002) The Polk syngas temperature is three times higher in comparison to Edwardsport's RSC exit temperature of 450°F and about double the temperature prior to reaching the scrubber. As EPRI notes, cooler gas temperature and scrubbing efficiency impacts the capturing of volatized metals at IGCC facilities. (EPRI, 1996) Edwardsport operates syngas cleaning at cooler temperatures and scrubs more through quench sprays, condensate spray, scrubber nozzle, and the scrubber, improving the removal of Hg and Cl by impacting forms and liquid to gas contact. These captured volatized substances are then later removed from the process via grey water blowdown.

Grey Water Process

A benefit of utilizing a gasification process is the capability to recycle various waste streams in the process, mitigating facilities water consumption. At the Edwardsport IGCC facility, the recirculating syngas scrubber water blows down back into the RSC to help capture fly ash particles and quench the syngas. The RSC quench water then blows down into the LP Flash drum, whereupon the LP Flash drum bottoms are transferred into the settler tanks. Up to this point, the water is classified as black water due to high solids content. The overflow from the solids settler is when the name transitions into grey water nomenclature and enters the grey water tanks. From grey water tanks, it is mainly recycled back into the syngas scrubber process for scrubbing, but a fraction is blown down to the grey water treatment process. By recycling the grey water stream back to the syngas scrubber, fines that carry over from the settler tank and dissolved solids are carried back into the system process, thereby affecting operations.

Over time, however, dissolved solids or the grey water balance accumulates and a blowdown has to occur to bring water chemistry back to acceptable operational conditions or to manageable grey water levels. Polk indicates that management of solids inventory in the grey water as being a major item that is dependent on the fuel being burned. Unavoidably, blowdown from the recirculating system is necessary to maintain control of system parameters within acceptable operational levels. (TECO, 2002) Edwardsport is no different in this overall operational philosophy. However, there are significant differences in blowdown rates, as previously alluded to, due to differences in, for example, ash content and chlorine content of fuels being used in the respective IGCC facilities.

Grey Water Treatment

Treatment equipment installed at each facility is different for treating a stream titled the same. This is mostly due to the differences in quality of fuel and gasifier operations covered in preceding sections.

Appendices A, B, and C provide process flow diagrams for visual examination of the differences between Polk's and Edwardsport's grey water treatment processes.

Table 3 - Grey Water Treatment Overview

	Normal Operating Flow (gpm)	Type and Number of Preliminary Evaporators	Type and Number of Crystallizers	Number of Condensate Streams Leaving Process	Solids Generated
Polk	100	1	1	2	Brine Salt
		Falling Film Evaporator	Forced Circulation Evaporator		
Edwardsport	450	1*	2	1**	Ammonium Chloride, Ammonium Sulfate, & Sodium Formate
		Forced Circulation Evaporator	Forced Circulation Evaporator		

*Two forced circulation evaporators are utilized if initial flow rate above normal operating flow
**Condensate streams from all system evaporators are combined into a single effluent

Polk Grey Water Treatment

Polk utilizes a relatively simple grey water treatment system that consists of a preliminary concentrator, consisting of a falling film evaporator, and a crystallizer, using forced circulation evaporator technology. Grey water blowdown is treated first through the preliminary concentrator. The vapor stream from the preliminary concentrator is reused in the evaporative process with a compressor, which compresses the vapor to a pressure that provides additional heat to the evaporator. When the pressure is allowed to abate, the vapor stream condenses on the tube side. The condensate stream from the falling film evaporator is reused in the gasification process for pumps seals, instrument purges, and condensate drum. (TECO, 2002)

The brine concentrate from the preliminary concentrator is further processed by the crystallizer. The vapor generated from the crystallizer is cooled, condensed, and sent to the grinding sump for use in slurry production, while the liquid brine concentrate is sent to a prill tower for solids removal. (TECO, 2002). The prill tower replaced the original centrifugal solids separation system due to process issues with solids variability in the concentrated brine stream.

EPA separately sampled condensate streams from the preliminary concentrator (falling film evaporator) and from the crystallizer during its 2010 sampling effort for development of the ELG. However, only data from preliminary concentrator condensate samples was used by EPA in

calculating effluent limitations for gasification wastewater in the ELGs. (EPA, 2015) Data from the crystallizer condensate was not used by EPA in the ELG development since EPA concluded that the crystallizer was not operating properly at the time of the Polk sampling effort. (EPA, 2015)

Edwardsport Grey Water Treatment

Edwardsport IGCC utilizes a complex grey water treatment system, in comparison to Polk, that is designed for the removal of ammonium chloride, formate, and other dissolved solids, as well as metals such as arsenic, mercury and selenium, resulting from the gasification process.

Grey water treatment system begins with a preliminary mechanical vapor recompression (MVR) concentrator (employing forced circulation evaporation), referred to in this discussion as the Concentrator. There are two (2) MVR concentrators available, but only one is utilized in normal operation. The second Concentrator is utilized in the event of high chloride concentration in raw grey water requiring an increase in grey water blowdown from the gasifier process. The vapor fraction generated from the Concentrator is sent through a caustic vapor scrubber to remove volatile acids and entrained droplets. Scrubbed vapor from the scrubber is sent back to the Concentrator Heater (a heat exchanger) to provide heat to the evaporative process of the preliminary Concentrator. Any remaining scrubbed vapor not condensed in the Concentrator Heater is routed to the Barometric Condenser. Vapor condensate from the Concentrator Heater is routed to a flash tank and the remaining condensate is pumped to the Air Cooled Condensate Cooler and from there to the RO Feed Tank. Vapor from the flash tank is either recycled back to the Concentrator Heater or is routed to the CoLD Crystallizer Heater and the Formate Crystallizer Heater to contribute heat to those crystallization processes. Spent scrubber water collected in the bottom of the scrubber is recycled and a fraction is blown down to the Formate Crystallizer forced circulation evaporator for further processing.

The brine solution from the Concentrator is blown down to a CoLD™ Crystallizer forced circulation evaporator. The vapor generated in the CoLD™ Crystallizer is sent through a Cold Crystallizer Vapor Scrubber to remove any carryover prior to entering the Air Cooled Condenser Vacuum System. The spent scrubber water from the CoLD™ Crystallizer Vapor Scrubber is recycled but a fraction blows down into the Formate Crystallizer forced circulation evaporator. The CoLD™ Crystallizer concentrated brine liquor is circulated through a pressure filter from which solids consisting of ammonium chloride and ammonium sulfate are removed.

The Formate Crystallizer cycles up the blowdown waste streams from the Concentrator Vapor Scrubber and the CoLD™ Crystallizer Vapor Scrubber. The concentrated liquor from the Formate Crystallizer is recycled back through the crystallizer and a fraction is blown down to the Formate Pressure Filter to remove the solids primarily consisting of sodium formate. The vapor fraction from evaporator is captured in the Air-cooled Condenser Vacuum System from which condensate is utilized in other process or sent to Air Cooled Condensate Cooler and from there to the RO Feed Tank.

Uncondensed vapors leaving the Air-cooled Condenser Vacuum System are combined with uncondensed scrubber vapor from the Concentrator Heater and routed to the Barometric Condenser.

Vapor condensate streams from the Concentrator, the two crystallizers, crystallizer steam, and the Barometric Condenser all intermix in the Air Cooled Condensate Cooler prior to being routed to the reverse osmosis (RO) system for the removal of any ammonia and total dissolved solids. Reject

concentrate from the first RO unit is sent back to the Concentrator, while concentrate from the second RO unit is conveyed to the RO Feed Tank. Permeate from the RO process is either reused as makeup water for the recirculating cooling water system for the gasification process or conveyed to final treatment ponds prior to discharge.

An optional cyanide destruction system has been installed but determined to not be necessary. Presently, RO permeate is routed through the cyanide removal process tanks, but no chemicals are added.

The combination of condensate streams from all evaporators at the Edwardsport IGCC, including preliminary concentrator and the two crystallizers, as well as the condensate from the Barometric Condenser, into one effluent stream constitutes a fundamental difference from the Polk grey water treatment system as sampled by EPA since only concentrate from the preliminary concentrator at Polk was used by EPA in developing ELG limits for mercury and arsenic in gasification wastewater. A further fundamental difference involves the scrubbing of the vapor fraction produced by the preliminary MVR evaporator and the CoLD™ Crystallizer to extract additional contaminants from the vapor stream prior to its condensation. Polk does not employ scrubbers. Yet another fundamental difference derives from the effort at the Edwardsport IGCC to capture additional condensate in the Barometric Condenser from the uncondensed vapor fractions from (i) the MVR concentrator heat exchanger and (ii) the first condenser stage for scrubbed vapor from the CoLD™ Crystallizer and vapor produced by the Formate crystallizer. The Polk facility does not include such a secondary condenser process.

The combined condensate from all of Edwardsport's evaporators and the Barometric Condenser will be expected to contain higher concentrations of contaminants such as mercury than were obtained in EPA's sampling of only the preliminary condensate at Polk. Condensate produced by the crystallizers, as supplemented by the Barometric Condenser, will be expected to contain higher concentrations of such contaminants than condensate resulting from the preliminary concentrator since the input stream to the crystallizers will inherently contain higher concentrations of these contaminants than the raw grey water input to the preliminary concentrator.

Barometric Condenser

The Barometric Condenser system is designed to pressurize vapor streams to enhance condensation of vaporized substances before the vapor streams are utilized in the sulfur recovery unit (SRU) in the gasification block. Relevant vapor streams consists of uncondensed vapors from Concentrator Heater and the Air Cooled Condenser, the latter having received scrubbed vapors from the CoLD™ Crystallizer and the vapor stream (unscrubbed) from the Formate Crystallizer. Condensate from the barometric condenser, as previously mentioned, blows down and combines with several other grey water process streams (Concentrator Condensate, Crystallizer Steam Condensate, and Crystallizer Process Condensate) prior to entering the RO system. Sampling the condensate from the barometric condenser indicated a higher level of Hg concentration in comparison to the other condensate streams, indicating volatilized mercury that could leave the treatment system through the atmosphere is being captured in the barometric condenser process. The additional mercury captured by the barometric condenser increases the loading on the RO system, which may or may not be able to polish as required.

In the Polk grey water treatment process, a barometric condenser is not utilized to capture vapors that form as a part of evaporating the blowdown. Instead, vents on process vessels are open to the atmosphere, allowing mercury to leave the process; decreasing the total amount of mercury that is contained within the system.

Grey Water Treatment Cycling

Polk's grey water treatment system does not return main process streams to the front of the process. The grey water stream enters the treatment system and then treatment residuals leave the treatment system as either solids for offsite disposal or reuse or distillate liquid going back into the gasification process for reuse. The grey water treatment system at Edwardsport IGCC, however, is configured differently. The treatment stream enters the described grey water treatment system as above, but with the utilization of a two-step reverse osmosis system for polishing, an interesting complication in wastewater treatment system configuration is introduced.

Reverse osmosis (RO) systems utilize a semi-permeable membrane to propagate removal of dissolved solids through osmotic pressure. The system generates a less dissolved solids stream, usually identified as permeate, and a high dissolved solids stream, usually identified as concentrate. There are several different possible configurations, but a two pass RO is utilized in the Edwardsport grey water treatment system. A RO is not utilized in Polk's grey water treatment process.

The First Pass RO concentrate (or reject) is returned to the preliminary concentrators in the grey water treatment process to remove more dissolved solids. The Second Pass RO concentrate (or reject) is returned to the front of the RO treatment process to further concentrate dissolved solids for removal via the first pass RO concentrate.

With the return of any concentrated stream from an end of a process to the front of a process, there are impacts on system performance and operations. For example, the concentration of chlorides in the feed to grey water can impact the heat of vaporization, which in turn impacts the overall energy balance. The degree of impact will depend on pollutant mass returned in comparison to pollutant mass in the raw influent stream.

Falling Film Evaporators vs. Forced Circulation Evaporators

Falling film evaporators offer a wide operating range, but do pose issues when salting and scaling occur. Polk indicated it was consistently running into problems with plugging of heat exchanger tubes due to scale formation and other materials requiring the system to be offline for maintenance and service. (TECO, 2002) Since there is only one falling film evaporator, reliability in the treatment system greatly diminished and Polk experienced a high operation and maintenance cost associated with water blasting of the tubes.

The use of forced circulation evaporation provides a means to mitigate plugging and scaling problems inside the evaporation process by keeping solids in suspension at all times. With several concentrators installed to cycle up the grey water stream and a RO polishing step, a high cost is incurred in the chemical supplies, operational labor, support labor, and aux load of system operations. The approximate annual O&M cost associated with running the Edwardsport IGCC grey water treatment system is about $876,000. Polk does not provide a grey water treatment cost break down, but

approximates total O&M power block, common, and water system costs at around $2 million dollars. (TECO, 2002)

Even with the current installed grey water treatment system at Edwardsport utilizing forced circulation evaporators, reverse osmosis, and optional cyanide destruct system, further capital equipment and/or existing system modifications may be necessary to meet the final ELG regulation.

Summary

There are several fundamentally different factors separating the Edwardsport IGCC from the two IGCC facilities utilized by EPA in developing the ELG limitations for gasification wastewater. The Polk IGCC, being EPA's main point of reference for the ELGs, differs significantly from the Edwardsport IGCC facility in several ways that were not taken into consideration by EPA in relation to IGCC functionality affecting gasification wastewater quality.

Edwardsport IGCC is designed differently and operates differently to be able to use the locally available Illinois Basin coal as fuel. The higher concentration of ash, chlorine and mercury in the coal results in an increase in the amount of these substances blown down to the grey water treatment system for removal as accumulated dissolved solids even if the blow down rate were unchanged. However, the higher chlorine content of the fuel will require an increased blowdown rate from the grey water recirculating system for syngas cleaning to maintain the desired set point for chloride concentration. In addition, the improved syngas cleaning process at Edwardsport, utilizing multiple spray configurations and cooler temperatures in the RSC and to the vapor scrubber increases the amount of fly ash and volatile substances captured in the black water process. This in turn affecting the amount of dissolved solids or particles carried over from settler tanks, resulting in an increased blowdown into the grey water treatment process. The choice of fuel source also resulted in a different, more complex evaporator configuration to promote removal of solids in the form of ammonium chloride, ammonium sulfate, & sodium formate from the grey water and the combining of all evaporator condensate streams into a single output stream for further polishing in a RO. With a portion of the RO concentrate returning to the front of the process, there is potential for operational upsets to occur that will not be seen with a once-through configuration used at other IGCC sites.

The technical differences outlined above result in higher pollutant loadings to Edwardsport IGCC's grey water treatment system and significantly higher effluent levels for certain pollutants. These differences constitute fundamentally different factors that were not taken into consideration in EPA's development and adoption of the ELGs for gasification wastewater.

References

1. EPA. (2015). Technical Development Document for the Effluent Limitations Guidelines and Standards for the Steam Electric Power Generating Point Source Category. Washington, DC. DCN EPA-821-R-15-007.

2. TECO. (2002). Tampa Electric Polk Power Station Integrated Gasification Combined Cycle Project. Tampa Electric Power Company (TECO). DCN 06537.

3. TECO (2009). Polk Draft Site Visit Attachment 1. Tampa Electric Power Company (TECO). DCN SE00598A1.

4. EPRI (1996). Trace Substance Emissions from a Coal-fired Gasification Plant: Summary Report. TR-106964.

Appendix A - Polk Grey Water Falling Film Evaporator (TECO, 2009)

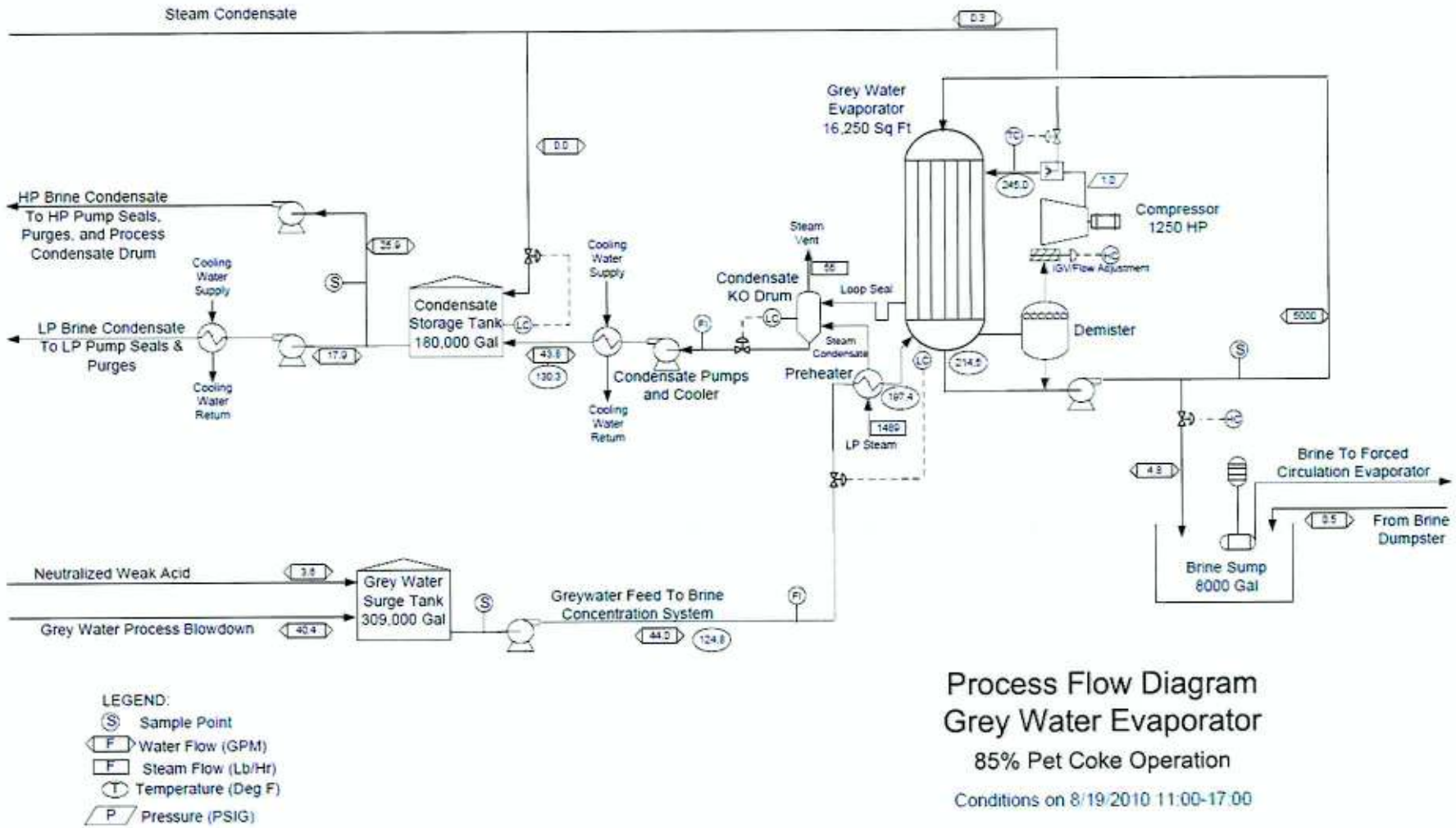

LEGEND:
- (S) Sample Point
- F Water Flow (GPM)
- F Steam Flow (Lb/Hr)
- (T) Temperature (Deg F)
- P Pressure (PSIG)

Process Flow Diagram
Grey Water Evaporator
85% Pet Coke Operation
Conditions on 8/19/2010 11:00-17:00

Appendix B - Polk Grey Water: Forced Circulation Evaporator (TECO, 2009)

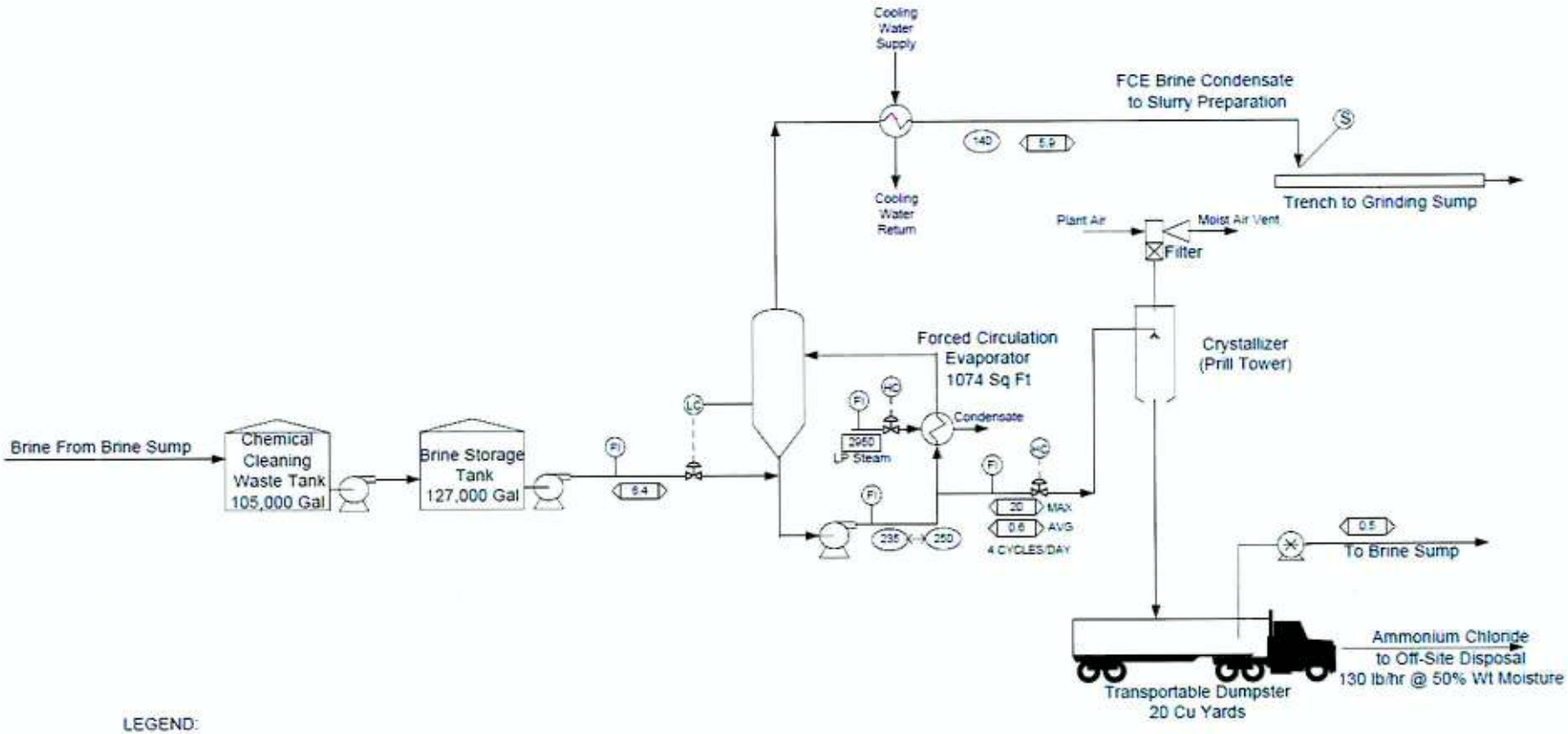

LEGEND:
- Sample Point
- Water Flow (GPM)
- Steam Flow (Lb/Hr)
- Temperature (Deg F)
- Pressure (PSIG)

Process Flow Diagram
Forced Circulation Evaporator
85% Pet Coke Operation

Conditions on 8/19/2010 – 8/21/2010

Appendix C: Edwardsport IGCC Grey Water Process Flow Diagram

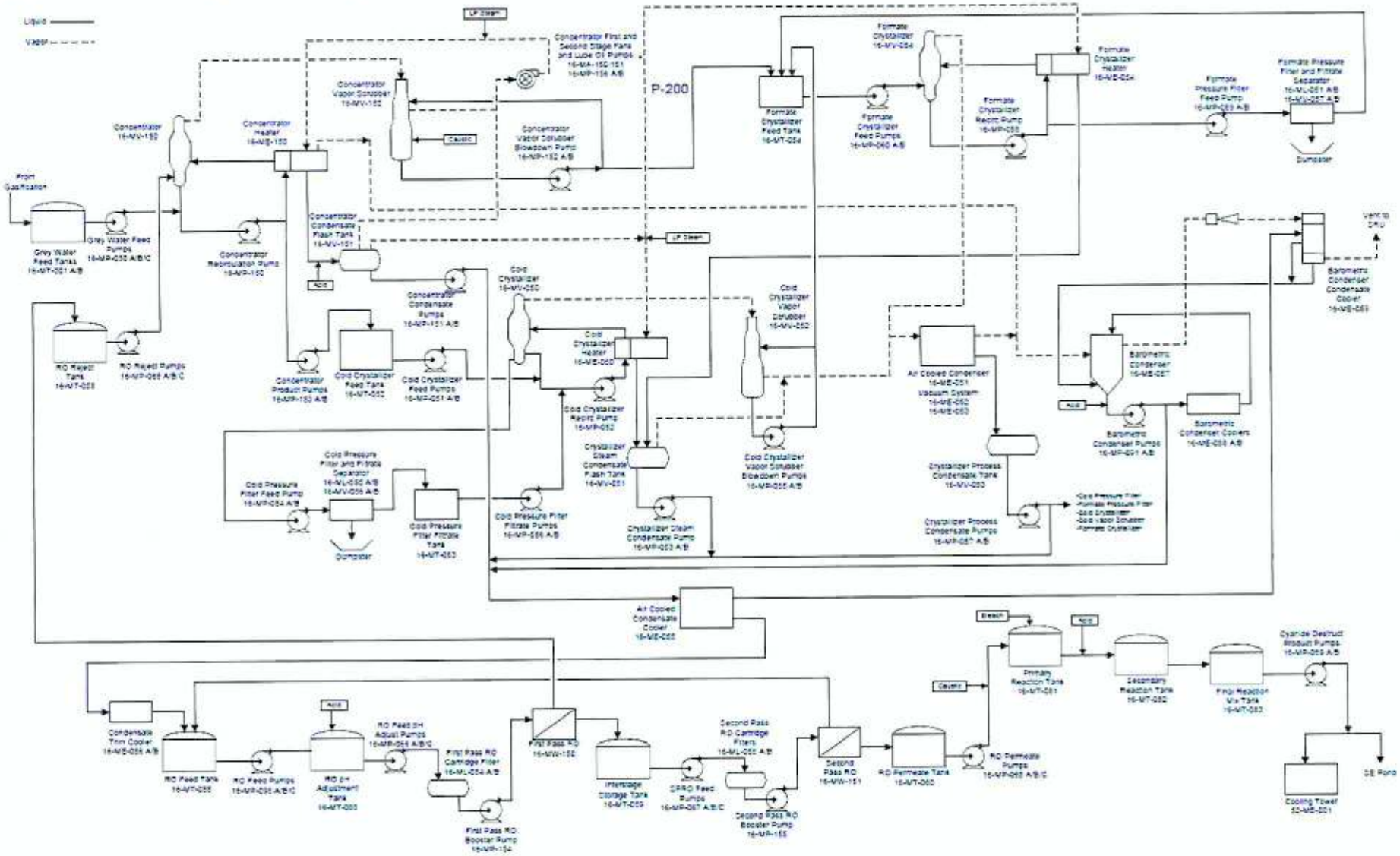

Appendix 3

Coal Analyses for Edwardsport IGCC Station

STANDARD LABORATORIES, INC.

1530 N. Cullen Avenue, Evansville, IN 47715

Evansville Lab No: 2015-1294-5
Date Received: 12/16/15
Date Reported: 01/18/16

Sample ID: QUARTER 4 2015

BEAR RUN
TYPICAL HIGH SULFUR

FOR: PEABODY ENERGY
7100 EAGLE CREST BLVD, STE 200
EVANSVILLE, IN 47715
ATTN: PHIL DODD

PROXIMATE ANALYSIS

	(AS RECD)	(DRY)
MOISTURE	14.22	
ASH	9.96	11.61
VOLATILE	33.84	39.45
FIXED CARBON	41.98	48.94
SULFUR	3.25	3.79
BTU	11029	12857
MAF BTU		14546

LBS SO2/MM BTU: 5.89

EQUILIBRIUM MOISTURE: 10.41

FREE SWELLING INDEX: 4.5

ASH FUSION TEMPERATURES (DEG F)

	REDUCING	OXIDIZING
INITIAL	2005	2440
SOFTENING	2080	2470
HEMISPHERICAL	2140	2500
FINAL	2260	2520

HARDGROVE GRINDABILITY INDES (HGI)

65 AT 2.25 % MOISUTRE

MINERAL ANALYSIS OF ASH

	(% IGNITED BASIS)
SILICON DIOXIDE	44.40
ALUMINUM OXIDE	18.82
TITANIUM DIOXIDE	0.78
CALCIUM OXIDE	2.62
POTASSIUM OXIDE	2.18
MAGNESIUM OXIDE	0.78
SODIUM OXIDE	0.58
PHOSPHORUS PENTOXIDE	0.20
FERRIC OXIDE	26.44
SULFUR TRIOXIDE	2.57
BARIUM OXIDE	0.05
MANGANESE DIOXIDE	0.05
STRONTIUM OXIDE	0.03
UNDETERMINED	0.50

BASE/ACID RATIO: 0.51
SLAG VISCOSITY: 2305 DEG F T250 POISE
FOULING INDEX: 0.30
SLAGGING INDEX: 1.93
SILICA VALUE: 59.81
% ALKALI AS Na2O: 0.23

WATER SOLUBLE ALKALIES

	(% DRY BASIS)
SODIUM OXIDE	0.047
POTASSIUM OXIDE	0.003

ULTIMATE ANALYSIS

	(% DRY BASIS)
ASH	11.61
HYDROGEN	5.17
CARBON	72.89
NITROGEN	1.51
SULFUR	3.79
OXYGEN	5.03
CHLORINE	0.04
FLUORINE	0.007

FORMS OF SULFUR

	(% DRY BASIS)
TOTAL	3.79
PYRITIC	1.65
SULFATE	0.03
ORGANIC	2.11

Respectfully Submitted,

FORM NO. 20

Evansville Lab No: 2015-1294-5
Date Received: 12/16/15
Date Reported: 01/18/16

STANDARD LABORATORIES, INC.

1530 N. CULLEN AVENUE
EVANSVILLE, IN 47715

FOR: PEABODY ENERGY
7100 EAGLE CREST BLVD, STE 200
EVANSVILLE, IN 47715
ATTN: PHIL DODD

Sample ID: QUARTER 4 2015

BEAR RUN
TYPICAL HIGH SULFUR

TRACE ELEMENT	DRY COAL BASIS, ug/g
ANTIMONY	1.04
ARSENIC	8.8
BARIUM	41
BERYLLIUM	2.1
BORON	130
BROMINE	4
CADMIUM	0.63
CHLORINE	434
CHROMIUM	20
COBALT	4.5
COPPER	10
FLUORINE	67
GERMANIUM	12
LEAD	16.2
LITHIUM	8.4
MANGANESE	44
MERCURY	0.126
MOLYBDENUM	5.3
NICKEL	19
SELENIUM	2.9
SILVER	0.05
STRONTIUM	36
THALLIUM	1.00
TIN	0.5
URANIUM	1.7
VANADIUM	37
ZINC	32
ZIRCONIUM	19.3

RESPECTFULLY SUBMITTED, [signature]

FORM # 21

STANDARD LABORATORIES, INC.

1530 N. Cullen Avenue, Evansville, IN 47715

Evansville Lab No: 2015-1294-6
Date Received: 12/16/15
Date Reported: 01/18/16

Sample ID: QUARTER 4 2015

BEAR RUN
TYPICAL MID SULFUR

FOR: PEABODY ENERGY
7100 EAGLE CREST BLVD, STE 200
EVANSVILLE, IN 47715
ATTN: PHIL DODD

PROXIMATE ANALYSIS

	(AS RECD)	(DRY)
MOISTURE	16.35	
ASH	8.23	9.84
VOLATILE	32.03	38.29
FIXED CARBON	43.39	51.87
SULFUR	1.93	2.31
BTU	11021	13175
MAF BTU		14613

LBS SO2/MM BTU: 3.50

EQUILIBRIUM MOISTURE: 12.06

FREE SWELLING INDEX: 4.5

ASH FUSION TEMPERATURES (DEG F)

	REDUCING	OXIDIZING
INITIAL	2105	2510
SOFTENING	2200	2520
HEMISPHERICAL	2265	2535
FINAL	2345	2555

HARDGROVE GRINDABILITY INDES (HGI)

62 AT 2.26 % MOISUTRE

MINERAL ANALYSIS OF ASH

	(% IGNITED BASIS)
SILICON DIOXIDE	52.00
ALUMINUM OXIDE	21.40
TITANIUM DIOXIDE	0.92
CALCIUM OXIDE	1.36
POTASSIUM OXIDE	2.66
MAGNESIUM OXIDE	0.94
SODIUM OXIDE	0.70
PHOSPHORUS PENTOXIDE	0.15
FERRIC OXIDE	18.60
SULFUR TRIOXIDE	0.89
BARIUM OXIDE	0.05
MANGANESE DIOXIDE	0.03
STRONTIUM OXIDE	0.02
UNDETERMINED	0.28

BASE/ACID RATIO: 0.33
SLAG VISCOSITY: 2500 DEG F T250 POISE
FOULING INDEX: 0.23
SLAGGING INDEX: 0.76
SILICA VALUE: 71.33
% ALKALI AS Na2O: 0.24

WATER SOLUBLE ALKALIES

	(% DRY BASIS)
SODIUM OXIDE	0.047
POTASSIUM OXIDE	0.003

ULTIMATE ANALYSIS

	(% DRY BASIS)
ASH	9.84
HYDROGEN	5.16
CARBON	74.81
NITROGEN	1.57
SULFUR	2.31
OXYGEN	6.31
CHLORINE	0.03
FLUORINE	0.007

FORMS OF SULFUR

	(% DRY BASIS)
TOTAL	2.31
PYRITIC	0.87
SULFATE	0.02
ORGANIC	1.42

Respectfully Submitted,

FORM NO. 20

Evansville Lab No: 2015-1294-6
Date Received: 12/16/15
Date Reported: 01/18/16

STANDARD LABORATORIES, INC.

1530 N. CULLEN AVENUE
EVANSVILLE, IN 47715

FOR: PEABODY ENERGY
7100 EAGLE CREST BLVD, STE 200
EVANSVILLE, IN 47715
ATTN: PHIL DODD

Sample ID: QUARTER 4 2015

BEAR RUN
TYPICAL MID SULFUR

TRACE ELEMENT	DRY COAL BASIS, ug/g
ANTIMONY	2.17
ARSENIC	6.1
BARIUM	39
BERYLLIUM	2.4
BORON	141
BROMINE	4
CADMIUM	0.15
CHLORINE	336
CHROMIUM	17
COBALT	6.1
COPPER	9
FLUORINE	67
GERMANIUM	16
LEAD	11.2
LITHIUM	7.7
MANGANESE	24
MERCURY	0.064
MOLYBDENUM	3.3
NICKEL	27
SELENIUM	1.9
SILVER	0.04
STRONTIUM	18
THALLIUM	0.52
TIN	0.5
URANIUM	1.9
VANADIUM	33
ZINC	23
ZIRCONIUM	23.9

RESPECTFULLY SUBMITTED, [signature]

FORM # 21

Appendix 4

Condensate Streams and Final Effluent Data – April 2016

Edwardsport IGCC Grey Water Treatment System

Appendix 4: Condensate Streams and Final Effluent Data – April 2016

Edwardsport IGCC Grey Water Treatment System

Mercury, ng/l

	5-Apr	6-Apr	8-Apr	Average
Concentrator Condensate	7.03	7.25	1.72	5.33
Crystallizer Steam Condensate	<0.50	<0.50	0.59	0.53
Crystallizer Process Condensate	3.31	1.34	1.15	1.93
Barometric Condenser Condensate	350	104	89.0	181.00
Condensate Trim Cooler (Combined Condensate)	15.6	16.3	8.88	13.59
Final Greywater Treatment Effluent (Outfall 501)	4.74	8.39	3.09	5.41

Appendix 5

Excerpts from NPDES Permit No. IN0002780 issued March 30, 2016 and Accompanying Fact Sheet

STATE OF INDIANA

DEPARTMENT OF ENVIRONMENTAL MANAGEMENT

AUTHORIZATION TO DISCHARGE UNDER THE

NATIONAL POLLUTANT DISCHARGE ELIMINATION SYSTEM

In compliance with the provisions of the Federal Water Pollution Control Act, as amended, (33 U.S.C. 1251 et seq., the "Act"), and IDEM's authority under IC 13-15,

DUKE ENERGY INDIANA, LLC – EDWARDSPORT IGCC STATION

is authorized to discharge from the IGCC station that is located at 15424 East State Road 358, Edwardsport, Indiana, to receiving waters identified as the West Fork of the White River in accordance with effluent limitations, monitoring requirements, and other conditions set forth in Parts I, II, and III hereof. This permit may be revoked for the nonpayment of applicable fees in accordance with IC 13-18-20.

Effective Date: April 1, 2016.

Expiration Date: March 31, 2021.

In order to receive authorization to discharge beyond the date of expiration, the permittee shall submit such information and forms as are required by the Indiana Department of Environmental Management no later than 180 days prior to the date of expiration.

Signed March 30, 2016, for the Indiana Department of Environmental Management.

Paul Higginbotham,
Deputy Assistant Commissioner
Office of Water Quality

PART I

A. EFFLUENT LIMITATIONS AND MONITORING REQUIREMENTS

1. The permittee is authorized to discharge from the outfall listed below in accordance with the terms and conditions of this permit. The permittee is authorized to discharge from Outfall 002. The discharge is limited to coal pile runoff, coal pile runoff pond effluent, site storm water, treated sanitary wastewater, oil/water separator water, cooling tower blowdown, gasification and power block quenches and drains, softener regenerant, 'grey-water' treatment flow, and other wastewater treatment flows. Samples taken in compliance with the monitoring requirements below shall be taken at a point representative of the discharge but prior to entry into the West Fork of the White River. Such discharge shall be limited and monitored by the permittee as specified below:

DISCHARGE LIMITATIONS [1][2][11]

Table 1

	Quantity or Loading			Quality or Concentration			Monitoring	Requirements
Parameter	Monthly Average	Daily Maximum	Units	Monthly Average	Daily Maximum	Units	Measurement Frequency	Sample Type
Flow	Report	Report	MGD	-------	--------	-----	1 x Daily	24 Hour Total
O+G	-------	-------	-----	15	20	mg/l	1 x Weekly	Grab
TSS	-------	-------	-----	30	100	mg/l	1 x Weekly	Grab
Temperature[8]	Report	[9]	°F	-------	--------	-----	2 x Monthly	Grab
TRC[4][5]	-------	-------	-----	0.02	0.04	mg/l	1 x Weekly	Grab
Copper[3]	-------	-------	-----	0.042	0.084	mg/l	1 x Weekly	24-Hr. Comp.
Iron[3]	-------	-------	-----	1.0	1.0	mg/l	1 x Weekly	24-Hr. Comp.
Cadmium[3]	-------	-------	-----	0.011	0.022	mg/l	2 x Monthly	24-Hr. Comp.
Selenium[3][5]	-------	-------	-----	0.13	0.26	mg/l	2 x Monthly	24-Hr. Comp.
Zinc[3]	-------	-------	-----	0.25	0.51	mg/l	1 x Weekly	24-Hr. Comp.
Mercury[7]	-------	-------	-----	12	20	ng/l	1 x Bimonthly	Grab
Total Chromium[3]	----	-------	-----	0.2	0.2	mg/l	1 x Weekly	24-Hr. Comp.
Ammonia, as N	-------	-------	-----	12	24	mg/l	2 x Monthly	24-Hr. Comp.
Free Cyanide[5][6]	----	-------	-----	0.022	0.044	mg/l	1 x Weekly	Grab
Whole Effluent Toxicity Tests[10]								

Table 2

	Quality or Concentration			Monitoring	Requirements
Parameter	Daily Minimum	Daily Maximum	Units	Measurement Frequency	Sample Type
pH	6.0	9.0	s.u.	1 x Weekly	Grab

[1] See Part I.B. of the permit for the Narrative Water Quality Standards.

[2] In the event that changes are to be made in the use of water treatment additives including dosage rates contributing to this Outfall, the permittee shall notify the Indiana Department of Environmental Management as required in Part II.C.1 of this

permit. The use of any new or changed water treatment additives or dosage rates shall not cause the discharge from any permitted outfall to exhibit chronic or acute toxicity. Acute and chronic aquatic toxicity information must be provided with any notification regarding any new or changed water treatment additives or dosage rates.

[3] The permittee shall measure and report the identified metal in total recoverable form.

[4] The water quality based effluent limit (WQBEL) for TRC is less than the limit of quantitation (LOQ) as specified below. Compliance with this permit will be demonstrated if the effluent concentrations measured are less than the LOQ.

If the measured concentration of TRC is greater than the water quality based effluent limitations and above the respective LOD specified in the table below in any three (3) consecutive analyses, or any five (5) out of nine (9) analyses, then the discharger shall:

(1) Determine the source of the parameter through an evaluation of sampling techniques, analytical/laboratory procedures, and waste streams (including internal waste streams); and re-examine the chlorination /dechlorination procedures.

(2) The sampling and analysis for TRC shall be increased to 4 X weekly and remain at this increased sampling frequency until:

(a) The increased sampling frequency for TRC has been in place for at least three (3) consecutive analyses, or any five (5) out of nine (9) analyses.

(b) At least nine (9) samples have been taken under this increased sampling frequency; and

(c) The measured concentration of TRC is less than the LOD specified in the table above in at least seven (7) out of the nine (9) most recent analyses.

[5] The following EPA test methods and/or Standard Methods and associated LODs and LOQs are to be used in the analysis of the effluent samples. Alternative methods may be used if first approved by IDEM.

Parameter	Test Method	LOD	LOQ
Mercury	1631, Revision E	0.2 ng/l	0.5 ng/l
Selenium	3113B or 3114B	2 ug/l	6.4 ug/l
Selenium	200.8	2.1 ug/l	6.7 ug/l
Selenium	200.9	0.6 ug/l	1.9 ug/l

Chlorine	4500-Cl-D,E or 4500-Cl-G	0.02 mg/l	0.06 mg/l
Cyanide, Free	4500-CN-G	5 ug/l	16 ug/l
Cyanide, Free	1677	0.5 ug/l	1.6 ug/l

Case-Specific LOD/LOQ
The permittee may determine a case-specific LOD or LOQ using the analytical method specified above, or any other test method which is approved by the Commissioner prior to use. The LOD shall be derived by the procedure specified for method detection limits contained in 40 CFR Part 136, Appendix B, and the LOQ shall be set equal to 3.18 times the LOD. Other methods may be used if first approved by the Commissioner.

[6] Sample preservation procedures and maximum allowable holding times for total cyanide, or available (free) cyanide are prescribed in Table II of 40 CFR Part 136. Note the footnotes specific to cyanide. Preservation and holding time information in Table II takes precedence over information in specific methods or elsewhere.

[7] Mercury monitoring shall be conducted bi-monthly in the months of February, April, June, August, October, and December of each year for the term of the permit using EPA Test Method 1631, Revision E.

[8] The following conditions apply for Temperature outside the mixing zone:

(1) There shall be no abnormal temperature changes that may adversely affect aquatic life unless caused by natural conditions.

(2) The normal daily and seasonal temperature fluctuations that existed before the addition of heat due to other than natural causes shall be maintained.

(3) The maximum temperature rise at any time or place above natural temperatures shall not exceed five (5) degrees Fahrenheit (two and eight-tenths (2.8) degrees Celsius) in streams.

[9] The discharge from Outfall 002, as determined at the edge of the mixing zone described in 327 IAC 2-1-4, shall not exceed the maximum limits in the following table by more than three degrees Fahrenheit (3°F) (one and seven-tenths degrees Celsius (1.7°C)).

Table 1

	Jan	Feb	Mar	Apr	May	Jun	Jul	Aug	Sep	Oct	Nov	Dec
°F	50	50	60	70	80	90	90	90	90	78	70	57
°C	10	10	15.6	21.1	26.7	32.2	32.2	32.2	32.2	25.5	21.1	14

The permittee will have the option of either meeting the above limits at the end of pipe, or by meeting the limits with a mixed river temperature that takes into account

the mixing zone allowed by 327 IAC 2-1-6(b). The mixed river temperature is to be determined by employing the following mathematical model:

$$T_{MR} = T_u + \frac{Q_e(T_e - T_u)}{127 + Q_e}$$

where:

T_{MR} = mixed river temperature (°F)
T_u = upstream river temperature (°F)
T_e = effluent temperature (°F)
Q_e = effluent flow (MGD)
127 = one-half of the $Q_{7,10}$ low flow value of the receiving stream in MGD

[10] The permittee shall continue the biomonitoring program for Outfall 002 using the procedures contained in Part I.F. of this permit.

[11] The discharge of cooling tower blowdown is regulated by 40 CFR 423.15. 40 CFR 423.15(j)(1) prohibits the discharge, in detectable amounts, of the 126 priority pollutants listed in Appendix A of such regulation contained in chemicals added for cooling tower maintenance with the exception of total zinc and total chromium which have specific numeric limits. In accordance with 423.15(j)(3), instead of monitoring specified in 40 CFR 122.48(b), compliance with the limitations for the 126 priority pollutants may be determined by engineering calculations which demonstrate that the regulated pollutants are not detectable in the final discharge by the analytical methods in 40 CFR 136. However, compliance with the above limitations for the 126 priority pollutants (with the exception of zinc and chromium) must be reported each time there is a change in the chemicals added for cooling tower operation and/or maintenance.

National Pollutant Discharge Elimination System
Fact Sheet for
Edwardsport IGCC Generating Station
Draft: October 2015
Final: April 2016

Indiana Department of Environmental Management
100 North Senate Avenue
Indianapolis, Indiana 46204
(317) 232-8603
Toll Free (800) 451-6027
www.idem.IN.gov

Permittee:	Duke Energy Indiana, LLC 1000 East Main Street Plainfield, IN 46168
Existing Permit Information:	Permit Number: IN0002780 Expiration Date: 11/30/15
Source Contact:	Mark Peacock, Senior EHS Professional (812)735-8583 or Mark.Peacock2@duke-energy.com
Source Location:	15424 East State Road 358 Edwardsport, IN 47528 Knox County
Receiving Stream:	West Fork of the White River
Proposed Permit Action:	Renew
Date Application Received:	June 2, 2015
Source Category	NPDES Major – Industrial
Permit Writer:	Richard Hamblin (317)232-8696 or rhamblin@idem.in.gov

numeric limits. In accordance with 423.15(j)(3), instead of monitoring specified in 40 CFR 122.48(b), compliance with the limitations for the 126 priority pollutants may be determined by engineering calculations which demonstrate that the regulated pollutants are not detectable in the final discharge by the analytical methods in 40 CFR 136. However, compliance with the above limitations for the 126 priority pollutants (with the exception of zinc and chromium) must be reported each time there is a change in the chemicals added for cooling tower operation and/or maintenance.

6.0 PERMIT DRAFT DISCUSSION

6.1 Discharge Limitations

The proposed final effluent limitations are based on the more stringent of the Indiana WQBELs, TBELS, or approved TMDLs and NPDES regulations as appropriate for each regulated outfall. Sections 5.2 and 5.3 of this document explain the rational for the effluent limitations at each Outfall.

Outfall 002

Parameter	Monthly Average	Daily Maximum	Units	Source of Limitation
Flow	Report	Report	MGD	IAC
Oil and Grease	15	20	mg/l	BPJ/TBEL
Temperature	Report	Report	°F	WQBEL
TSS	30	100	mg/l	TBEL
TRC	0.02	0.04	mg/l	WQBEL
Copper	0.042	0.084	mg/l	WQBEL
Iron	1.0	1.0	mg/l	TBEL
Cadmium	0.011	0.022	mg/l	WQBEL
Selenium	0.13	0.26	mg/l	WQBEL
Zinc	0.25	0.51	mg/l	WQBEL
Mercury	12	20	ng/l	WQBEL
Total Chromium	0.2	0.2	mg/l	TBEL
Ammonia(as N)	12	24	mg/l	WQBEL
Free Cyanide	0.022	0.044	mg/l	WQBEL
Whole Effluent Toxicity Testing				

Parameter	Daily Minimum	Daily Maximum	Units	Source of Limitation
pH	6.0	9.0	Std Units	IAC