ID NUMBER	NAME (STREET & MAILING ADDRESS)
MISSISSIPPI (3 Companies)	
R1464	Collier Drum Company 173 Highway 51 North, Batesville MS 38606
R1708	Ashland Chemical Company 455 Industrial Dr., P.O. Box 10298, Jackson MS 39209
R1538	Triangle Resource Industries 5000 Highway 80, East, Jackson MS 39208

ID NUMBER	NAME (STREET & MAILING ADDRESS)
MISSOURI (19 Companies)	
R1655	Brown Shoe Company Route 1, P.O. Box 9A, Benton MO 63736
R1633	Chemtech Industries, Inc. 6301 N.E. Birmingham Road, Kansas City MO 64117
R1221	Missouri Solvents & Chemical Co. 2522 Nicholson Av, Kansas City MO 64120
R1653	Drum Recovery Service Highway 67 North, Rt. 1, Corning, AR, P.O. Box 66, Neelyville MO 63954
R1122	Waggner Paint Co. 10Th & Burlington St., No. Kansas City MO 64116
R1533	Crown Zellerbach Ink Division 4150 Carr Lane Court, P.O. Box 23960-A, Shrewsbury MO 63119
R1680	Chem Supply Co., Inc. 2170 East Blaine Street, P.O. Box 10605, Springfield MO 65808
R1605	Chemtech Industries, Inc. 2235 West Battlefield Street, Springfield MO 65807
R1002	Apco Oil Corporation 6803 Arsenal St., St. Louis MO 63139
R1160	Ashland Chemical Co. 7710 Polk St., St. Louis MO 63111
R1499	Brown Shoe Company 4327 Gustine Ave., St. Louis MO 63116
R1323	Chemtech Corp. 139 East Soper Street, St. Louis MO 63111
R1419	Drumtech, Inc. 5060 Manchester Ave. (Rear), St. Louis MO 63110
R1273	Evans Steel Barrel Co. Inc. 3300 S. Second St., St. Louis MO 63118

ID NUMBER	NAME (STREET & MAILING ADDRESS)
MISSOURI (continued)	
R1315	L.G. Westerhold Cooperage Co. 2798 N. 13Th St., St. Louis MO 63106
R1572	Mid-West Industrial Chemical Co. 1509 Sublette Avenue, St. Louis MO 63110
R1220	Missouri Solvents & Chemical Co. 419 De Sota Ave, St. Louis MO 63147
R1652	Superior Oil Company, Inc. 60 Chouteau Avenue, St. Louis MO 63102
R1030	Great Lakes Container Corp. 42 Ferry St., St.Louis MO 63147

ID NUMBER	NAME (STREET & MAILING ADDRESS)
NEBRASKA (5 Companies)	
R1565	B/L Chemical Company 672 15th Avenue, Columbus NE 68601
R1570	Caldwell Manufacturing Company Old Kearney Air Base, P. O. Box 338, Kearney NE 68847
R1628	Jones Barrel Company 40th & Marcy, P. O. Box 55034 Station 'B', Omaha NE 68155
R1536	RECON, J.V. 1521 North 11th Street, Omaha NE 68110
R1407	Warren-Douglas Chemical Co., Inc. 3002 F Street, Omaha NE 68107

ID NUMBER	NAME (STREET & MAILING ADDRESS)
NEW HAMPSHIRE (6 Companies)	
R1730	Clarostat Mfg. Co., Inc. 1 Washington Street, Dover NH 03820
R1082	Great Lakes Container Corp. Rt. 125, Kingston NH 03848
R1430	Sanders Associates, Inc. Grenier Field, Manchester NH 03100
R1384	Whittaker - Merrimack Coatings & Chemicals Division Daniel Webster Hwy, Merrimack NH 03054
R1429	Sanders Associates, Inc. 95 Canal Street, Nashua NH 03061
R1726	Teradyne Connection Systems, Inc. 44 Simon Street, Nashua NH 03060

ID NUMBER	NAME (STREET & MAILING ADDRESS)
NEW JERSEY (34 Companies)	
R1405	Sussex Barrel & Drum Company 86 Lavergne Street, Belleville NJ 07109
R1233	Enterprise Container Corp. 267 New Brooklyn-New Freedom Road, Berlin NJ 08009
R1555	Aabco Steel Drum (Formerly Bernard Silver Company) 308-322 Front Street, Camden NJ 08102
R1717	Donald B. Kelly, Inc. 2008 Federal Street, Camden NJ 08105
R1206	Martin Aaron, Inc. 1542 South Broadway, Camden NJ 08104
R1374	Sukonik Barrel & Drum Co. 537 2nd Street, Camden NJ 08103
R1403	William Jones & Son Inc. 238 Liberty Street, Camden NJ 08104
R1402	Frank Cisek Steel Drums P.O. Box 81, Columbus NJ 08022
R1435	Industrial Steel Drum Company, Inc. P.O. Box 586, Glassboro NJ 08028
R1265	Reiter-Schneider-Connor 619 Jackson St., Hoboken NJ 07030
R1202	Kearney Steel Container Corp. Foot Of Bergen Ave., Kerney NJ 07032
R1589	Penick Corporation 1050 Wall Street West, Lyndhurst NJ 07071
R1422	Penick Corporation 540 New York Avenue, Lyndhurst NJ 07071
R1641	Process-Tech P.O. Box 471, Moorestown NJ 08057

ID NUMBER	NAME (STREET & MAILING ADDRESS)
NEW JERSEY (continued)	
R1309	Rutgers University Radiation Safety University Heights, New Brunswick NJ 08903
R1083	Albert Steel Drum Co., Inc. 338 Wilson Avenue, Newark NJ 07105
R1155	Ashland Chemical Co. 60 Park Pl., Newark NJ 07102
R1001	Bayonne Barrel & Drum Co. Raymond Blvd. & Rt.1, Newark NJ 07105
R1021	Bessemer Processing Co. 135 Haynes Avenue, Newark NJ 07114
R1098	Best Steel Drum Co., Inc. 50 Ferguson St., Newark NJ 07105
R1022	Central Steel Drum Co. 704 Doremus Avenue, Newark NJ 06856
R1616	Charles Fernicola Cooperage Co. 135 Harper Street, Newark NJ 07114
R1052	Gold Cooperage, Inc. 401 South St., Newark NJ 07105
R1594	Interstate Oil Products, Inc. 51 Stanton, Newark NJ 07114
R1020	Kingsland Drum & Barrel Co., Inc. 308 Miller St, Newark NJ 07114
R1240	Pride Steel Drum Co. 338 Wilson Av, Newark NJ 07105
R1200	Woodbridge Barrel Co., Inc. 48 Peerless Pl., Newark NJ 07114
R1330	Harpold & Hoffman 535-537 Ave. F, Newark NJ 07105

ID NUMBER	NAME (STREET & MAILING ADDRESS)
NEW JERSEY (continued)	
R1561	Barone Barrel Company 190 16th Avenue, Patterson NJ 07514
R1277	Rahway Steel Drum Co. 202 Elliot St., Rahway NJ 07065
R1505	Comps Industries, Inc. 5 Crescent Avenue, Rocky Hill NJ 08553
R1329	Jersey Cooperage Co., Inc. River Road, Sayreville NJ 08872
R1516	Trenton Fibre Drum Company, Inc. 1545 New York Avenue, Trenton NJ 08638
R1714	South Jersey Container Corportion RFD #1, New Freedom & New Brooklyn Rd., Winslow Township NJ 08009

ID NUMBER	NAME (STREET & MAILING ADDRESS)

NEW MEXICO (1 Companies)

R1700 Layton Drum Co. Albuquerque
610 General Chennault St., Albuquerque NM 87123

ID NUMBER	NAME (STREET & MAILING ADDRESS)
NEW YORK (42 Companies)	
R1549	Ashland Chemical Co. 3 Broad Street, P.O. Box 1300, Binghampton NY 13902
R1135	Ashland Chemical Co. 3 Broad St., Binghamton NY 13902
R1196	Acme Steel Drum Co. 1050 Grand St., Brooklyn NY 11211
R1426	Brooklyn Barrel Company 61 Milton Street, Brooklyn NY 11222
R1050	Goodman Bros. Steel Drum Co. Inc. 18 Division Pl., Brooklyn NY 11222
R1086	H.M. Roberts Company 157 Spencer Street, Brooklyn NY 11205
R1545	J.R. Cooperage Co., Inc. 100 Division Place, Brooklyn NY 11222
R1279	National Drum & Barrel Corp. 35 Beadel St., Brooklyn NY 11222
R1296	Phoenix Cooperage Co. 292-296 Scholes St., Brooklyn NY 11201
R1136	Ashland Chemical Co. 3701 River Drive, Buffalo NY 14207
R1567	Buffalo Equipment & Chemical Company 160 Van Rensselaer Street, Buffalo NY 14210
R1209	Buffalo Solvents & Chemical Co. Box 3 Station B, Buffalo NY 14207
R1168	Cumberland Cooperage Co. 35 Cumberland Ave., Buffalo NY 14220
R1058	Feldman Barrel & Drum Co. 35 Newell St., Buffalo NY 14206

ID NUMBER	NAME (STREET & MAILING ADDRESS)
NEW YORK (continued)	
R1002	H. Hyman Drum & Barrel Corp. 878 So. Division St., Buffalo NY 14210
R1059	Harbison Bros., Inc. 32 Appenheimer Avenue, Buffalo NY 14214
R1119	Pierce & Stevens Chemical Corp. 710 Ohio St., Buffalo NY 14240
R1121	Pratt & Lambert, Inc. 75 Tonawanda St., Buffalo NY 14240
R1474	Stetson Chemicals, Inc. 391 Exchange Street, Buffalo NY 14204
R1351	N. Storonske Cooperage Co. 6 Kraft Road, Castleton NY 12033
R1601	Hazardous Waste Disposal, Inc. 11A Picone Boulvard, Farmingdale NY 11735
R1762	CIBA-GEIGY Corporation Lower Warren Street, Glens Falls NY 12801
R1602	Westinghouse Electric Corporation Westinghouse Circle, Horseheads NY 14845
R1148	Ashland Chemical Co. 400 N. Perry St., Johnstown NY 12095
R1366	Swanson Chemical Laboratories 4 W. First St., Lakewood NY 14750
R1544	FBC Corporation 4111 Walden Avenue, Lancaster NY 14086
R1742	Strathmore Products, Inc. Burr Drive, P.O. Box 151, Liverpool NY 13201
R1621	R.L. Gaude Company, Inc. 4759 Cold Spring Road, P.O. Box 466, Lockport NY 14094

ID NUMBER	NAME (STREET & MAILING ADDRESS)
NEW YORK (continued)	
R1378	M & M Drum Company, Inc. 50 Glen St., Long Island NY 11542
R1106	Active Steel Drum Co. Inc. 52-30 34Th St., Long Island City NY 11101
R1755	London Nuclear Services, Inc. 473 Third Street, Niagara Falls NY 14301
R1285	Tri Cities Barrel Co. P.O. Box 88, Port Crane NY 13833
R1159	Ashland Chemical Co. South Street, Rensselaer NY 12144
R1382	Eastman Kodak Company 2400 Mt. Read Blvd, Rochester NY 14650
R1198	Kaplan Container Corp. 11-27 Haidt Place, Rochester NY 14608
R1194	Kitchton Cooperage Co. Inc 34 Freemans Bridge Rd., Schnectady NY 12301
R1162	Ashland Chemical Co. P.O. Box 302 Eastwood Sta., Syracuse NY 13206
R1074	Western N.Y. Barrel & Drum Co. 225 Sawyer Ave., Tonawanda NY 14156
R1413	HazO-O-Waste Corporation P.O. Box 548 Canal Road, Wampsville NY 13163
R1338	Friedrichsohn Cooperage, Inc. 157 Saratoga Ave., Waterford NY 12188
R1593	Dionics, Inc. 65 Rushmore Street, Westbury NY 11590
R1316	Wesco Steel Drum Co. 275 Ashburton Av., Yonkers NY 10701

ID NUMBER	NAME (STREET & MAILING ADDRESS)

NORTH CAROLINA (26 Companies)

R1470 W.C. Richards Co. Of Carolina
101 E. Maple Street, Aberdeen NC 28315

R1669 Singer Furniture Division
Route 1, Gibons Avenue, Bryson City NC 28713

R1232 Cary Barrel & Drum
P.O. Box 368, Cary NC 27511

R1418 Ashland Chemical Company
3930 Glenwood Dr., Charlotte NC 28232

R1091 Charlotte Steel Drum Corp.
2900 W. Trade St., Charlotte NC 28201

R1264 Winston Container Co.
4732 Morris Field Rd., Charlotte NC 28208

R1335 Drum Service, Inc.
Rt. 2 Box 517-D Cessna Rd., Concord NC 28025

R1724 S & W Chemicals, Inc.
Old Highway 70-A, Conover NC 28613

R1747 Southchem, Inc.
2000 East Pettigrew Street, P.O. Box 886, Durham NC 27702

R1488 Ashland Chemical Co.
2802 Patterson St., Greenboro NC 27420

R1230 Atomic Paint Co. Inc.
Lenoir Road, Hickory NC 94124

R1199 Carolina Solvents, Inc.
P.O. Box 57, Hickory NC 28601

R1094 Mobil Chemical Co.
1647 English Road, High Point NC 27261

R1181 United Drum Inc.
214 Berkley St., High Point NC 27260

ID NUMBER	NAME (STREET & MAILING ADDRESS)
NORTH CAROLINA (continued)	
R1166	Duke Refining Corp. 2020 Jarrell St., Highpoint NC 27260
R1065	The Lilly Co. English Road, Highpoint NC 27261
R1503	Seaboard Chemical Corp. Rt. Box 93, Riverdale Dr., Jamestown NC 27282
R1293	Setzers Laundry 634 Pennton Av., Lenoir NC 28654
R1665	Singer Furniture Division - Plant #1 1409 West College Avenue, Lenoir NC 28645
R1664	The Singer Furniture Company 740 South Boulevard, 2424 Norwood Street, S.W., Lenoir NC 28645
R1438	Cardinal Steel Drum Company 1600 N. Winston Road, Lexington NC 27292
R1118	Academy Steel Drum Co., Inc. P.O. Box 1217, Matthews NC 28105
R1493	Ashland Chemical Co. P.O. Box 2507 1415 S. Bloodworth St., Raleigh NC 27602
R1540	Triangle Resource Industries Watlington Industrial Road, Reidsville NC 27320
R1670	Singer Furniture 133-A Charlotte Avenue, P.O. Box 40, Sanford NC 27330
R1275	Spruance Southern, Inc. P.O. Box 3054, Winston Salem NC 27102

ID NUMBER	NAME (STREET & MAILING ADDRESS)
OHIO (42 Companies)	
R1132	Ashland Chemical Co. 2699 Mosadome Rd., Akron OH 44312
R1522	Goodyear Tire & Rubber Company 1144 East Market Street, Akron OH 44316
R1412	W.J. Ruscoe Company 485 Kenmore Boulvard, Akron OH 44301
R1528	Northwes Environmental Services, Inc. 4213 North Bend Road, Ashtabula OH 44004
R1259	American Steel Drum Service Co., Inc 154 Northfield Rd., Bedford OH 44146
R1134	Ashland Chemical Co. 49Th & Guernsey St., Bellaire OH 43906
R1058	Columbus Steel Drum Co. 1385 Blatt Blvd., Blacklick OH 43004
R1182	Canton Wood Products Co. 1101 11Th St., Canton OH 44707
R1178	Alex Gottlieb Container Co. 5300 Vine St., Cincinnati OH 45237
R1043	Amity Drum Service, Inc. 101 East Amity Rd., Cincinnati OH 45237
R1208	Amsco Solvents & Chemical Co. 4619 Reading Rd., Cincinnati OH 45229
R1138	Ashland Chemical Co. Murray Rd & Big 4 Railroad, Cincinnati OH 45217
R1117	Cincinnati Drum Service, Inc. Big Four & Smalley Road, Cincinnati OH 45212
R1359	Techno Adhesives Co. 12113 Hosteller Rd., Cincinnati OH 45241

ID NUMBER	NAME (STREET & MAILING ADDRESS)
OHIO (continued)	
R1033	The Queen City Barrel Co. 1937 South St., Cincinnati OH 45204
R1169	Barrel & Drum Service, Inc. 1728 Powers St., Cincinnatti OH 45223
R1139	Ashland Chemical Co. 9450 Midwest Ave., Cleveland OH 44125
R1290	Associated Drum Reconditioning Co. Of Ohio 8106 Preble Ave., Cleveland OH 44104
R1347	City Barrel & Drum Co. 2831 East 91St St., Cleveland OH 44104
R1319	Cleveland Barrel & Drum Co. 4850 Chaincroft Rd., Cleveland OH 44125
R1368	General Steel Barrel Co. 3967 Pearl Rd., Cleveland OH 44109
R1173	George G. Arnson Barrel Co. 2484 Canal Rd., Cleveland OH 44113
R1513	Gray, L. Barrel & Drum Co. 2910 East 75Th Street, Cleveland OH 44104
R1236	J. Frank Drum & Barrel Co. 7107 Grand Av, Cleveland OH 44104
R1100	Klausner Barrel Co. 2716 East 51St St., Cleveland OH 44104
R1076	L. Gottlieb Container Reconditioning Co. 8105 Preble Ave., Cleveland OH 44104
R1222	Ohio Solvents & Chemical Co. 3470 West 140Th St., Cleveland OH 44111
R1038	Steel Drum Exchange, Inc. 3363 West 140Th St., Cleveland OH 44111

ID NUMBER	NAME (STREET & MAILING ADDRESS)
OHIO (continued)	
R1427	Technical Products Inc. 3500 Ridge Road, Cleveland OH 44102
R1237	Warshawsky & Sons Barrel & Drum Co. 3310 E 79Th St, Cleveland OH 44127
R1140	Ashland Chemical Co. 3849 Fisher Road, Columbus OH 43228
R1712	Eton-Colby Chemical Co. 820 N. Cassady Ave., P.O. Box 626, Columbus OH 43216
R1142	Ashland Chemical Co. 2854 Springboro Pike, Dayton OH 45439
R1110	Dayton Industrial Drum, Inc. 1880 Radio Road, Dayton OH 45431
R1242	Lima Barrel & Drum Co. 1140 East Franklin St., Lima OH 45802
R1592	Donn Corporation, Wall Systems Division 1035 West Smith Road, Medina OH 44256
R1523	Horwitz & Pintis Co. 1002 Lagrange Street, P.O. Box 3506 Sta. D, Toledo OH 43608
R1518	Sunbeam Products, Inc. 623 Main Street, Toledo OH 43605
R1226	Toledo Solvents &Chemical Co. 4051 South Ave., Toledo OH 43615
R1292	Toledo Steel Drum Co. 1800 State Line Dr., Toledo OH 43612
R1519	Liberty Solvents and Chemicals 9429 Ravenna Road, Twinsburg OH 44087
R1618	Urbana Steel Drum Company 713 Muzzy Road, 392 East Hickory Grove Road, Urbana OH 43078

ID NUMBER	NAME (STREET & MAILING ADDRESS)
OKLAHOMA (20 Companies)	
R1574	G & G Drum Company 2 miles west of Main Street, Binger OK 73009
R1414	Tulsa Reconditioners Inc. 17400 E. Young Street, Catoosa OK 74015
R1629	Chandler Drum Reconditioning Route 3 - Box 86 AB, Chandler OK 74834
R1553	Gemine Laquers, Inc. 101 S.W. 22nd Street, El Reno OK 73036
R1721	M & G Painting Company Highway 74 in Garvin County, P.O. Box 338, Elmore City OK 73035
R1617	S & S Cleaning Service Route 1, Box 253, Luther OK
R1328	Noble Drum Co. Route 2 Box 241, Noble OK 73068
R1003	Apco Oil Corporation P.O. Box 60157, Oklahoma OK 73106
R1278	A & A Drum Co. 6112 S Hillcrest Dr., Oklahoma City OK 73159
R1272	Alpha Industrial Products Co. 424 S.E. 3Rd St., Oklahoma City OK 73125
R1156	Ashland Chemical Co. 4300 S.W. 36Th St., Oklahoma City OK 73119
R1765	CHEMCENTRAL/Oklahoma City 7301 S.W. 29th, P.O. Box 19320, Oklahoma City OK 73144
R1596	M & M Company 111 North Klein, Oklahoma City OK 73106
R1289	The Bucket Shop Inc. 5555 N.W. 5Th St., Oklahoma City OK 73107

ID NUMBER	NAME (STREET & MAILING ADDRESS)
OKLAHOMA (continued)	
R1525	Ponca Drum Recycling, Inc. RR6-Box 318B, Ponca City OK 74601
R1496	Macomb Drum Rt. #3 Box 205 E.W. 126Th Street, Tecumsch OK 74873
R1004	Apco Oil Corporation 4500 N. Peoria Street, Tulsa OK 74106
R1164	Ashland Chemical Co. 3535 West 21St St., Tulsa OK 74107
R1369	Concure Company 321 N. Detroit St., Tulsa OK 74101
R1306	Great Lakes Container Corp. 2717 W. 21St St., Tulsa OK 74103

ID NUMBER	NAME (STREET & MAILING ADDRESS)
OREGON (8 Companies)	
R1583	University of Oregon, Department of Public Service 1230 Franklin Boulevard, Eugene OR 97403
R1214	Central Solvents & Chemical Co. 1082 N. Lombard St., Portland OR 97203
R1625	Drum Recovery, Inc. 11104 N.E. Holman Street, Portland OR 97220
R1125	Laston Bros. Drum Co. 10839 N. Lombard Ave., Portland OR 97203
R1477	Myers Drum Company 10103 N.E. Marx, Portland OR 97220
R1025	Reimann & Mckenney Inc. 3000 N.W. St. Helens Road, Portland OR 97210
R1191	Standard Oil Co. Of California 5531 N.W. Doane St., Portland OR 97208
R1185	Vann Barrel Co. 8443 N. Kerby Avenue, Portland OR 97217

ID NUMBER	NAME (STREET & MAILING ADDRESS)
PENNSYLVANIA (35 Companies)	
R1644	Berkley Products Company 405 S. 7th Street, P.O. Box 157, Akron PA 17501
R1077	Jacob Kline Cooperage 701 East Highland St., Allentown PA 18002
R1130	Bakerstown Container Corp. Box 51, Bakerstown PA 15007
R1471	Mine Safety Appliances Co. Rd #2, Evans City PA 16033
R1500	Casket Shells, Inc. First Street, Eynon PA 18403
R1157	Ashland Chemical Co. 150 Fourth Av., Freedom PA 15042
R1623	Samuel Miller & Son, Inc. 37 West Clay Street, P. O. Box 881, Lancaster PA 17604
R1177	Samuel Miller & Sons, Inc. Hazel &Dorwart Sts., Lancaster PA 17603
R1691	Reliable Recyclers 114 S. Maple Ave., Box 186, Leola PA 17540
R1304	Linwood Container Corp. 30 Morton St., Linwood PA 19061
R1476	Ecoloss Chemical & Refining Co. Brush Creek Road & Penn Street, Manor PA 15665
R1645	K. S. Processing Company, Inc. 201 West 10th Street, P.O. Box 471, Marcus Hook PA 19061
R1543	FBC Corporation Route 228, Post Office Box 599, Mars PA 16046
R1551	Avery International-Chemical Dept. P.O. No. 2 Box 70, Mill Hall PA 17751

ID NUMBER	NAME (STREET & MAILING ADDRESS)
PENNSYLVANIA (continued)	
R1702	R. Callahan Company 1411 Barbour Pl., New Castle PA 16101
R1027	National Steel Drum Co., Inc. Trenton Ave. & Ontario St., Phila PA 19134
R1439	B & F Cooperage, Inc. N.W. Cr. Trenton Ave. & Rush St., Philadelphia PA 19134
R1676	D. Chernon & Co. Adams Avenue & Leiper Street, Philadelphia PA 19124
R1124	General Cooperage Co. 2435 Island Road, Philadelphia PA 19142
R1297	Globe Solvents Co. 2200 E. Westmoreland St., Philadelphia PA 19134
R1032	Publicker Industries, Inc. Delaware Ave. & Bisler Sts., Philadelphia PA 19148
R1687	Quality Container Corp. Trentoc Ave. & Ontario St., P. O. Box 12710, Philadelphia PA 19134
R1532	Smith Kline & French Laboratories 1500 Spring Garden Street, P.O. Box 7929, Philadelphia PA 19101
R1495	Smith,Kline & French Laboratories P.O. Box 7929 1500 Spring Garden St., Philadelphia PA 19101
R1170	Southwark Cooperage Co., Inc. Meadow & Wolf St., Philadelphia PA 19143
R1262	The Gilbert Spruance Co. Richmond & Tioga Sts., Philadelphia PA 19134
R1207	Allegheny Solvents & Chemical Co. P.O. Box 15597, Pittsburgh PA 15244
R1399	Max Schutte & Son Inc 2619 Smallman St., Pittsburgh PA 15222

ID NUMBER	NAME (STREET & MAILING ADDRESS)
PENNSYLVANIA (continued)	
R1111	Pittsburgh Barrel & Drum Co. 200 S. 21St St., Pittsburgh PA 15203
R1325	Berenfield Barrel Co. 20Th & Chapman St., Sharpsburg PA 15215
R1693	Metro Container Corporation Second & Price Streets, Second & Price Streets, Box A, Trainer PA 19016
R1037	Universal Container Corporation 2nd & Price Sts., Trainer PA 19013
R1651	Kelly Brothers, Inc. 208 Cowbell Road, Willow Grove PA 19090
R1396	Wrightsville Barrell Co. P.O. Box 21, Wrightsville PA 17368
R1599	Industrial Solvents & Chemical Company Stevens Road, R.D. 1, Box 511, York Haven PA 17370

ID NUMBER	NAME (STREET & MAILING ADDRESS)
RHODE ISLAND (5 Companies)	
R1250	New England Container Co. Inc. , Centredale RI 02911
R1092	Great Lakes Container Corp. 592 Arnold Road, Coventry RI 02816
R1417	Providence Barrel & Steel Drum Co. 10 Oak Street, Esmond RI 02917
R1311	John H. Collins & Sons Dunnell Lane, Pawtucket RI 02860
R1251	New England Container, George Washington Hwy., Smithfield RI 02917

ID NUMBER	NAME (STREET & MAILING ADDRESS)
SOUTH CAROLINA (8 Companies)	
R1109	Moore Drums, Inc Stark Industrial Park, Charleston Hts. SC 29405
R1494	Ashland Chemical Co. P.O. Box 1424 916 Rosewood Dr., Columbia SC 29201
R1517	Westinghouse Electric Corp.-Nuclear Fuel Division Drawer R, Columbia SC 29250
R1679	Worth Chemical Corporation Route 3, Fairforest Road, P.O. Box 176, Fairforest SC 29336
R1481	Ashland Chemicals 100 Industrial Blvd, Greenville SC 29606
R1298	Duncan Steel Drum Co. P.O. Box 865, Rock Hill SC 29730
R1756	Milford, Bannister and Associates, Inc. 4455 South Pine Street, P.O. Box 6191, Spartanburg SC 29304
R1075	Moreland Chemical Co., Inc. P.O. Box 2169, Spartanburg SC 29302

ID NUMBER	NAME (STREET & MAILING ADDRESS)

SOUTH DAKOTA (1 Companies)

R1647	Syncom, Division of Schwan's Sales Enterprises 1000 Syncom Drive, Mitchell SD 57301

ID NUMBER	NAME (STREET & MAILING ADDRESS)
TENNESSEE (33 Companies)	
R1703	C & C Drum Services Rt. 1 Box 800, Rt. 2 Box 302 #27, Atoka TN 38004
R1546	Amaira Corporation Highway 18 North, Bolivar TN 38008
R1299	AAA Barrel & Drum Company 1501 E 37Th St., Chattanooga TN 37407
R1478	AAA Barrel & Drum Company 1501 East 37Th Street, Chattanooga TN 37407
R1750	Drum Service, Inc. 1501 East 37th Street, P.O. Box 72993, Chattanooga TN 37407
R1758	Columbia Barrel & Drum Rt#8, Box 189, Columbia TN 38401
R1564	Elk Valley Container Company Winchester Highway, P.O. Box 875, Fayetteville TN 37334
R1129	Nashville Drum Service 1607 Mallory Lane, Franklin TN 37064
R1626	Nashville Drum Service Company, Inc. 1607 Mallory Lane, Franklin TN 37064
R1539	Triangle Resource Industries Old Green Brier Road, Box C, Green Brier TN 37073
R1492	Ashland Chemical Co. 5263 National Drive, Knoxville TN 37901
R1180	Dixie Barrel & Drum Co. 2120 Jones Street, Knoxville TN 37920
R1007	Apco Oil Corporation 2064 Channel Av., Memphis TN 38113
R1117	Drumco, Memphis Drumco, Inc. 3299 Tulane Rd., Memphis TN 38116

ID NUMBER	NAME (STREET & MAILING ADDRESS)
TENNESSEE (continued)	
R1013	Jehl Cooperage Co., Inc. 4 East Virginia Ave., Memphis TN 38102
R1375	Jones & Hutchison Drum Co. 447 E. Mallory, Memphis TN 38106
R1394	Keep Petro-Chemical P.O. Box 2053, Memphis TN 33801
R1104	Memphis Container Co., Inc. 1761 Warford St., Memphis TN 38108
R1550	P.N.B. Co. 901 East Bodley, P.O. Box 1598, Memphis TN 38101
R1487	Sharvania Oil & Grease Co., Inc. 1184 Thomas Street, Memphis TN 38107
R1507	Southern Container Corp. 613-15 Chelsea Avenue, Memphis TN 38107
R1716	Southern Service Company 3467 Holeman Place, 1830 Myrna Lane, Memphis TN 38117
R1479	Southland Industrial Producers 2654 Channel Avenue, Memphis TN 38113
R1266	Sullivan Co. , Memphis TN
R1373	Tennessee Container Service 743 Brandywine Blvd, Memphis TN 38127
R1667	W & R Drum Company 1492 Grimes Place, 1863 S. Wellington, Memphis TN 38106
R1710	Hardeman County Container Co. Rt. 2, Box 351-A, Middleton TN 38052
R1681	L & J Service Co. 3376 Bass Road, 7756 Mahoney Road, Millington TN 38053

ID NUMBER	NAME (STREET & MAILING ADDRESS)
TENNESSEE (continued)	
R1664	River City Owner Company 8262 Rankin Branch Road, Millington TN 38053
R1773	B.J. Fox & Son 337 2nd Avenue South, Nashville TN 37201
R1709	Superior Container Service 7917 Old Lee Highway, Doltewah TN 37363
R1314	Sequatchie Steel Drum Co. P.O. Box 183, Sequatchie TN 37374
R1737	DANco Drums Blair Hollow Road, Route 1, Box 362, Taft TN 38488

ID NUMBER	NAME (STREET & MAILING ADDRESS)
TEXAS (43 Companies)	
R1310	Apco Oil Corp. P.O. Box 3172, Abilene TX 79604
R1141	Ashland Chemical Co. Industrial Street, Addison TX 75001
R1088	Acme Cooperage Co., Inc 4515 Irving Blvd., Dallas TX 75247
R1008	Apco Oil Corporation 2060 W. Commerce, Dallas TX 75208
R1224	Chem Central 2503 Vison St., Dallas TX 75207
R1046	Dallas Steel Drums, Inc 2214 Singleton Blvd., Dallas TX 75212
R1719	Hoffman Drum Company 2520 Great Oak, P.O. Box 53612, Dallas TX 75253
R1554	Van Waters & Rogers 4707 Alpha Road, P.O. Box 34749, Dallas TX 75234
R1754	Adobe Industries, Inc. 2030 Texas Street, P.O. Box 196, El Paso TX 79942
R1768	Layton Drum Company International of El Paso 1318 North Stevens, El Paso TX 79903
R1760	Olympic Drum Company, Inc. 2004 Bassett Street, El Paso TX 79942
R1313	Southwestern Cooperage Co. 2550 Glendale Ave., Fort Worth TX 76106
R1029	Thomas Steel Drums, Inc. 2517 N.E. 35Th St., Fort Worth TX 76111
R1009	Apco Oil Corporation , Ft. Worth TX

ID NUMBER	NAME (STREET & MAILING ADDRESS)
TEXAS (continued)	
R1201	Drumex Inc. 1402 Clinton Drive, Galena Park TX 77547
R1428	Todd Research & Technical Division P.O. Box 1600, Galveston TX 77553
R1472	Blackhawk Drum Service 1000 Profit Drive, Garland TX 75040
R1352	J.R.J. Reconditioners 1218 Delores Drive, Garland TX 75040
R1300	La May Industries Corp. 1122 N. First St., Garland TX 75040
R1010	Arco Oil Corporation 1700 Houston Natural Gas Bldg., Houston TX 77002
R1145	Ashland Chemical Co. 8901 Old Galveston Rd, Houston TX 77034
R1203	Burbank Barrel & Drum Co. 4815 Clinton Drive, Houston TX 77010
R1619	CHEMCENTRAL/Houston 8425 Market Street, P. O. Box 24335, Houston TX 77013
R1061	Drum Service Co., Inc. 400 Blaffer Street, Houston TX 77020
R1354	Purechem Company 10001 Chemical Road, Houston TX 77062
R1225	Texas Solvents & Chemical Co. P.O. Box 24086, Houston TX 77029
R1369	Metro Barrel Co. 11965 E. Hawn Freeway, Kleberg TX 75145
R1393	Delta Container Company, Division 610 Fisher Rd., Longview TX 75601

ID NUMBER	NAME (STREET & MAILING ADDRESS)
TEXAS (continued)	
R1732	M.T. West d.b.a. Royle Container 200 Valentine Lane, Longview TX 75604
R1559	Royle Container 200 Valentine Lane, Longview TX 75604
R1363	Scrub-A-Dubb Barrel & Container Co. 810 N. Ash, Lubbock TX 79417
R1255	Par-Tex, Inc 220 So. Throckmorton Street, Mckinney TX 75069
R1153	Ashland Chemical Co. Rankin Rd., Midland TX 79701
R1650	Ashland Chemical Company Rt. 1 S. Rankin Highway, P.O. Box 2416, Midland TX 79702
R1322	Ector Drum & Specialties, Inc. P.O. Box 2845, Odessa TX 79760
R1302	Odessa Drum Co. 2214 Alice St., Odessa TX 79439
R1054	Port Drum Co. 237 West 9Th St., Port Arthur TX 77640
R1011	Arco Oil Corporation 1107 E. Southcross St., San Antonio TX 73223
R1356	Medina Packaging & Drum Co. 301 S. Medina, San Antonio TX 78207
R1371	United States Packaging Corp. 231 E. Cevallos, San Antonio TX 78217
R1613	Evans Cooperage Company, Inc. 10521Sheldon Road, Route 5, P.O. Drawer RR, Crosby, TX 77532, Sheldon TX
R1295	Albert Lamay Co. Route 5, Terrell TX 75160

ID NUMBER	NAME (STREET & MAILING ADDRESS)
TEXAS (continued)	
R1711	Patterson Solvents 9009 Jacksboro Highway, P.O. Box 1202, Wichita Falls TX 76307

ID NUMBER	NAME (STREET & MAILING ADDRESS)
UTAH (8 Companies)	
R1261	Thiokol Chemical Corp. P.O. Box 524, Brigham City UT 84302
R1682	Rio Algom Corporation Lisbon Mine, La Sal Route, Moab UT 84532
R1398	Beehive Barrel And Drum 401 Paxton Ave., Salt Lake City UT 84101
R1246	Chevron Oil Co. 2350 N 10Th St., Salt Lake City UT 84110
R1431	Thatcher Chemical Co. 1900 Fortune Road, Salt Lake City UT 84106
R1437	Reclaim Barrel Supply Company 8487 So. 1700 West, West Jordan UT 84084
R1244	American Barrel & Cooperage Co., Inc 49 S. 5Th, West Salt Lake City UT 84102
R1215	Central Solvents & Chemical Co. 2465 S 1100 W, Wood Cross UT 84087

ID NUMBER	NAME (STREET & MAILING ADDRESS)
VIRGINIA (11 Companies)	
R1718	Atlantic Research Corporation 7511 Wellington Road, Gainesville VA 22065
R1365	Wampler Chemical Corp. 1730 Dealton Ave., Harrisonburg VA 22801
R1379	Prillaman Chemical Corp. Fisher Rd., Martinsville VA 24112
R1183	Rock Drum Co. 2610 Florida Avenue, Norfolk VA 23513
R1106	Prime Drum Corp. 505 East Indian River Rd., Norfolk VA 23523
R1632	Haskell Chemical Company, Inc. 6101 Staples Mill Road, Box 9515, Richmond VA 23228
R1115	Richmond Barrel & Box Co. 1215 East Cary St., Richmond VA 23219
R1752	Upaco Adhesives Inc. 4105 Castlewood Road, P.O. Box 34067, Richmond VA 23234
R1490	Ashland Chemical Co. 2410 Patterson Ave. S.W., Roanoke VA 24019
R1282	Reliance Universal Inc. 2837 Roanoke Ave., Roanoke VA 24015
R1666	Singer Furniture Company 3322 Read Road, NE, P.O. Box 5337, Roanoke VA 24012

ID NUMBER	NAME (STREET & MAILING ADDRESS)
WASHINGTON (9 Companies)	
R1190	Standard Oil Co. Of California P.O. Box 125, Edmonds WA 98020
R1627	Ashland Chemical Company 831 5th Avenue South, P. O. Box 220, Kent WA 98031
R1213	Central Solvents & Chemical Co. 7601 S. 190Th St., Kent WA 98031
R1238	Seattle Barrel Inc. 4716 Airport Way, S. Seattle WA 98108
R1675	Guardsman Chemicals, Inc. 13535 Monster Road, Seattle WA 98178
R1231	Northwest Cooperage Co. 7152 1St Ave.S., Seattle WA 98108
R1291	Chemical Processors, Inc. 5501 Airportway, So. Seattle WA 98108
R1216	Central Solvents & Chemical Co. 6308 E Sharp Av., Spokane WA 99206
R1604	Cascade Steel Drum, Inc. 620 East 112th Street, Tacoma WA 98445

ID NUMBER	NAME (STREET & MAILING ADDRESS)
WEST VIRGINIA (3 Companies)	
R1146	Ashland Chemical Co. 101-22Nd St., Huntington WV 25704
R1188	Atlas Steel Container Corp. Viscose Rd, Nitro WV 25143
R1573	Blue Ribbon Paint Company 2321 Main Street, Wheeling WV 26003

ID NUMBER	NAME (STREET & MAILING ADDRESS)
WISCONSIN (19 Companies)	
R1520	Milwaukee Solvents & Chemicals Corp. 14765 West Bobolink Avenue, P.O. Box 444, Butler WI 53007
R1436	Hydrite Chemical Company 150 W. Donkle Street, Cottage Grove WI 53527
R1416	Waste Research & Reclamation Co., Inc. Route 3, Eau Claire WI 54701
R1578	Hydrite Chemical Company 701 Sumner Street, LaCrosse WI 54601
R1345	Heresite & Chemical Co. 822 S. 14Th St., Manitowoc WI 54220
R1607	Banta, George Company, Inc. Midway Road, Curtis Reed Plaza , Menasha WI 54952
R1154	Ashland Chemical Co. 1033 W. Hawley Rd, Milwaukee WI 53208
R1579	Hydrite Chemical Company 7300 West Bradley Road, Milwaukee WI 53223
R1340	Jacobson Bros. Barrel Co. 703-741 So. Water St., Milwaukee WI 52304
R1055	Kitzinger Cooperage Corp. 2529 E. Norwich St., Milwaukee WI 53207
R1063	Mccann Barrel Co. 5311 South 9Th St., Milwaukee WI 53221
R1228	Wisconsin Solvents & Chemical Corp. 1719 S 83Rd St., Milwaukee WI 53214
R1260	J.K. Drum Company 204 Railroad Street, Neenah WI 54952
R1397	Wisconsin Solvent & Corp. 2400 S. 170Th St., New Berlin WI 53151

ID NUMBER	NAME (STREET & MAILING ADDRESS)
WISCONSIN (continued)	
R1089	Mid-America Steel Drum Co. 8570 South Chicago Rd, Oak Creek WI 53254
R1580	Hydrite Chemical Company 191 West 28th Avenue, Oshkosh WI 54901
R1547	Amaira Corporation 1113 Maryland Avenue, Sheboygan WI 53081
R1263	Sheboygan Paint Co. 1439 North 25Th St., Sheboygan WI 53081
R1558	Northern Engraving Corporation 803 South Black River Street, Sparta WI 54656

ID NUMBER	NAME (STREET & MAILING ADDRESS)
WYOMING (1 Companies)	
R1267	Layton Wyoming Drum Co. 4911 W. Yellowstone Hwy., Casper WY 82601

ID NUMBER	NAME (STREET & MAILING ADDRESS)
PUERTO RICO (3 Companies)	
R1656	Specialty Chem Corporation Road #2, KM. 39.8, Vega Baja, Munoz Rivera Ave. #412, Hato Rey PR 00918
R1631	Servicios Carbareon, Inc. Rd 385, Km 3.5, Tallaboa Ward, Penuelas, Suite 416, Cobian's Plaza, Santurce PR 00909
R1671	Medtronic P. R., Inc. Carretera 149 Km. 56.3 Villalba, P.O. Box M, Villalba PR 00766

ID NUMBER	NAME (STREET & MAILING ADDRESS)	
FOREIGN COUNTRY (5 Companies)		
R1274	Dominion Barrel & Drum Co. No. 3 Hwy. Box 7, Essex, Ontario	Cn ZZ
R1377	Plant National (Quebec) Ltd. 1800 46Th Ave., Lachine, Ontario	Cn ZZ
R1410	Plant National (Petrolia) Ltd. 260 Center St., Petrolia, Ontario	Cn ZZ
R1372	Plant National (Thornhill) Ltd. 337 John St. Rr #1, Thornhill, Ontario	Cn ZZ
R1163	Ashland Chemical Co. 150 Bronoco Av., Toronto, Ontario	Cn ZZ

PAGE 80 REGISTERED DRUM RECONDITIONERS (SORTED BY STATE AND CITY) 5/

APPENDIX B. LIST OF 337 FACILITIES NOT INCLUDED ON THE DOT LIST

Drum Reconditioning Inventory

Sorted By State

Company Name	Address	City	St	Zip	Telephone No.	Contact
Buckner Barrels and Drum Co.	P.O. Box 309	Springville	AL	35146		
Continental Fibre Drum/div of Cont.	578 Azalea rd	Mobile	AL	36609	(205)	
Grief Bros Corp./Raible Division	601 2nd Ave NE	Cullman	AL	35055	(205)	
Lerio Corp	1501 Telegraph Rd	Mobile	AL	36610	(205)	
Sirco Systems, Inc.	Brookley Complex	Mobile	AL	36606	(205)	
C & W Salvage	3716 West Fairmont	Phoenix	AZ	85019	(602) 269-7840	
Phoenix Paper Products	114 East Buchanan	Phoenix	AZ	85004	(602) 254-7585	
Peace Surplus, Inc.	107 N Stone Ave.	Tucson	AZ	85701	(602) 624-1705	
Cooper Asphalt Co., Inc.	2222 S 12th Ave.	Tucson	AZ	85713	(602) 624-2585	
Container Corporation of America	615 Hawaii Ave.	Torrance	CA	90503	(213) 775-6387	
Crane Bag Co.	1552 Fishburn Ave.	Los Angeles	CA	90063	( ) 268-6637	
Gene`s Cooperage Co.	2200 N Rosemead Bl	South Elmonte	CA	91733	( ) 283-0218	
Globe Drum Co., Inc.	1149 S Eastern Ave.	Los Angeles	CA	90040	( ) 263-2132	
Levine Ted Co.	1817 Chico Ave.	South ElMonte	CA	91733	(818) 579-1084	
Moss, Wm	4645 F Olympic Blvd.	Los Angeles	CA	90022	( ) 269-8396	
Pail Renewers Co.	17016 S Broadway	Gardena	CA	90248	( ) 324-0492	
Shalon Drum co.	408 W 132nd St.	Los Angeles	CA	90061	( ) 324-1516	
Standard Cooperage Co.			CA		( ) 877-2559	
Zavatsky Barrel & Drum Co.	94 Alameda	Williams	CA	95987	( ) 835-7660	
A & A Barrel & Drum Co.	5537 Bandera	Los Angeles	CA	90058	( ) 588-1464	
Burgeno Drum Co.	229 Fransisco	Carson	CA	90745	( ) 327-6034	
Evan`s Drum Company	16401 San Pablo Ave.	San Pablo	CA	94806	( ) 724-8770	
PM Chemical co.	5325 Grant	San Diego	CA	92110	( ) 296-0191	
San Diego Container		SanDiego	CA		( ) 277-5655	
Gifford Barrels		San Diego	CA		( ) 583-9311	
D & M Drum Co.	137 Lilac Ave.	Rialto	CA	92376	( ) 874-6935	
Four Star Container, Inc.	14226 1/2 Valley Bl	Fontana	CA	92335	( ) 874-6935	
Surplus City Retail Company	11796 Sheldon	Sun Valley	CA	91352	( ) 768-2888	
A J Lynch & Co.	8707 San Leandro	Oakland	CA	94621	( ) 632-2520	
Bay Area Drum Co., Inc	1212 Thomas Ave.	San Francisco	CA	94124	(415) 822-3955	
Container Products, Inc.	1849 Oak	Alameda	CA	94501	( ) 522-5511	
Metz & Evans Drum Co.	14895 E 14th	San Leandro	CA	94578	( ) 483-0574	
Western Drums	21301 Cloud Wy	Hayward	CA	94545	( ) 786-9762	
Sims Bucket Company	541 2nd	Rich	CA	94801	( ) 232-6011	
Norwalk Drum	15627 S Claretta Ave	Norwalk	CA	90650	( ) 921-5171	
Orloff Martin Barrels, Inc.	8136 E. Firestone Bl	Downey	CA	90241	( ) 862-5416	
Paramount Can Co., Inc.	15360 Allen Ave.	Paramount	CA	90723	( ) 531-0053	
Ropak West,Inc.	14720 Alondra Bl	LaMirada	CA	90638	( ) 802-1317	
Chambers Recycling	12822 E Whittier Bl	Whittier	CA	90602	( ) 945-5019	
Demptos Cooperage	849 Jackson	Napa	CA	94559	(707) 257-2628	
Russell Stanley-Act California	1100 S Azusa Ave.	Ind	CA	91748	( ) 965-8355	
Stephen B Cooperage Co.	2194 Spencer Ave.	Pomona	CA	91767	(714) 622-1553	
Freedom Industrial Salvage	8192 Monroe Ave.	Stanton	CA	90680	( ) 952-4104	
Gould Barrel		Denver	CO			
Greif Bros.	4330 F. 48th Ave. B	Denver	CO	80216	(303) 322-8777	

Drum Reconditioning Inventory

Sorted By State

Company Name	Address	City	St	Zip	Telephone No.	Contact
Denver Barrel & Drum Co.	2210 Blake	Denver	CO	80205	(303) 295-0404	
Johnson Box & Barrel Co.	6041 Huron	Denver	CO	80221	(303) 427-6479	
New England Barrel	20 Quinnipiac Ct.	New Haven	CT	06513		
Reliable Drum Co.	221 Old Gate Lane	Milford	CT	06460		
A & B Barrel	1 Iris Lane	Westport	CT	06880		
E & G Equipment & Chem. Co., Inc.	1171 Woodruff St.	Southington	CT	06489	(203) 621-2230	
Hartford Cooperage Co.	70 Tolland	Hartford	CT	06108	(203) 289-8654	
Reliable Barrel Co.	18 Alderwood Dr.	W.Hartford	CT	06117	(203) 236-6442	
Rutberg & Son	163 Howard	New London	CT	06320	(203) 442-3118	
Simmons, Al Shipping Agency	1136 Albany Ave.	Hartford	CT	06112	(203) 247-7447	
Warring James T & Sons, Inc.	1321 South Capitol St.	Washington	DC	20003	(202) 488-1528	
Art Sperry	9805 7th Ave	Orlando	FL	32809	(305) 855-4113	
American Internat'l Container, Inc.	1208 E Kennedy Blvd.	Tampa	FL	33602	( ) 229-7916	
Knott's Salvage & Hauling	2902 E Ellicot	Tampa	FL	33610	( ) 238-2624	
Bielecki Industries, Inc.	4801 NW 72nd Ave.	Miami	FL	33166	(305) 592-3952	
Ideal Drum Co.	10600 South River Dr. NW	Miami	FL	33178	(305) 888-4687	
General Metals Corp	3115 NW North River Dr.	Miami	FL	33142	(305) 635-4200	
Number One Co., Inc.	8115 98th St. NW	Miami	FL	33166	(305) 821-1142	
A Levin & Co.	3726 E Church St.	Jacksonville	FL	32202	( ) 354-1611	
Quality Drum Services	315 8th St., NE	Moultrie	GA	31768	(912) 985-0390	Charles Barnwell
Chem Central-Atlanta	Alchemy Place	Doraville	GA	30360	(404) 448-7123	
Adams Steel Drum		Rossville	GA	30741		
S & S Drum		Moultrie	GA	31768		
Container Corporation of America	6662 Marbut Rd.	Lithonia	GA	30058	(404) 482-5382	
Smith Container Corp.	3500 Browns Mill Rd. SE	Atlanta	GA	30354	(404) 768-8725	
Superior Container Service	P.O.Box 67	Graysville	GA	30726	(404) 891-9726	
DeWitt, Peter, Jr.	5946 S. Racine Ave.	Chicago	IL	60636		
Freund Can Co.	167 W. 84th St.	Chicago	IL	60620	(312) 224-4230	
N.B. Finishing, Inc.	P.O. Box 218	Worth	IL	60482	(312) 974-9205	
Nesco Steel Barrel Co.	1801 Benton	Granite City	IL	62040		
Inland Steel Container Co.	4300 W 130th	Chicago	IL	60658	1-800-323-3151	
Bennett Steel & Plastic Containers	515 First St.	Peotone	IL	60468	(312) 258-3211	
O'Bryan Barrel Co.			IL		( ) 479-6741	
Grief Bros Corporation	2341 W 136th Pl	Blue Island	IL	60406	(312) 385-7200	
AA Whities Drum Service	1725 W Rascher	Chicago	IL	60640	(312) 486-1133	
Ace Barrel Co.	1801 N Leavitt	Chicago	IL	60647	(312) 252-1244	
Busch W Drum Co.	1133 N Monitor	Chicago	IL	60651	(312) 379-0199	
Central Drum	3753 S Halsted	Chicago	IL	60609	(312) 827-6390	
Chicago Steel Container	1846 S. Kilbourn	Chicago	IL	60623	(213) 277-2244	
Fibre Drum co.	20 N Wacker St.	Chicago	IL	80608	(312) 263-7540	
Frank's Pail & Drum Service	545 W 119th St.	Chicago	IL	60625	(312) 928-5657	
Higgins Brothers, Inc.	1843 W 31st Pl	Chicago	IL	60608	(213) 523-0124	
Illinois Container, Inc.	1018 37th	Chicago	IL	60609	(312) 376-1631	
Jakacki Bag & Barrel, Inc.	6677 N Northwest Highway	Chicago	IL	60631	(312) 763-3566	

Drum Reconditioning Inventory

Sorted By State

Company Name	Address	City	St	Zip	Telephone No.	Contact
Kennedy Drum Service	2040 W. Touky	Chicago	IL	60645	(312) 338-6534	
Meyer Steel Drum, Inc.	1914 S.Kilbourn	Chicago	IL	60623	(312) 522-3030	
Michaels Cooperage Co.	380 W Pershing Rd	Chicago	IL	60609	(312) 368-6281	
Midwest Barrels	5143 W Diversity	Chicago	IL	60639	(312) 237-8747	
Peterson Barrel Co.	39 S. Green	Chicago	IL	60607	(312) 421-2744	
Trilla Cooperage, Inc.	2959 W 47th St	Chicago	IL	60632	(312) 847-7588	
General Cooperage, Inc.	5850 Ogden	Cicero	IL	60660	(312) 652-2220	
Delta Drum, Inc.	1601 Pratt Blvd	Elk Grove Vlg	IL	60007	(312) 439-9434	
Grief Bros Cooperage Co.	405 Ward	Joliet	IL	60432	(815) 722-3131	
J J Schultz Containers	7 W New	Lemont	IL	60439	(312) 257-7085	
Pazmey Corp.	14560 Ridge	Orland Park	IL	60462	(312) 349-2884	
Reliable Drum	10221 Hybiscus Dr.	Irland Park	IL	60462	(312) 460-7282	
Cliff's Container	525 135th St	Romeoville	IL	60441	(815) 886-1033	
Drum Parts Midwest, Inc.	459 N Williams	Thornton	IL	60476	(312) 877-6200	
Carney Company	Rt 31 & Boncosky Rd	West Dundee	IL	60118	(312) 428-1350	
Container Corporation of America	1350 W. Fullerton Ave.	Addison	IL	60101		
Michigan Container Co.		Indiannapolis	IN		(317) 451-4840	
Wayland Packaging Materials Co, Inc	31 E Georgia	Indiannapolis	IN	46204	( ) 636-6431	
Bennett Steel Containers	31 E Georgia	Indianapolis	IN	46204	(317) 636-6431	
B & B Box & Drum Co.	600 Kentucky Ave.	Indianapolis	IN	46225	( ) 639-5185	
A B C Rooter Service	2921 Farrow Ave.	Kansas City	KS	66104		
Ballinger Trash Service	405 N Baehr	Wichita	KS	67212	(316) 943-7910	
Nelson Barrel Sales	71[illegible] [illegible]lid	Mc Pherson	KS	67460	(316) 241-3242	
Universal Barrel Corp.	1103 Outer Loop	Louisville	KY	40219		
Barrel Merchants, Inc.	405 High	Frankfort	KY	40601	(502) 875-5819	
Independent Stave Co.	Danville Hwy	Lebanon	KY	40033	(502) 692-4674	
Kentucky Cooperage co.	Fairground Rd.	Lebanon	KY	40033	(502) 692-4466	
Lonnie Hays/Sons Staves	RFD 8	Liberty	KY	42539	(606) 787-8826	
Associated Cooperage Ind	2100 Gardiner Ln	Louisville	KY	40205	(502) 459-6113	
Blue Grass Cooperage Co.	Mac Lean Ave.	Louisville	KY	40213	(502) 368-1626	
Deeks & Co.	210 Louisville Air Park	Louisville	KY	40213	(502) 361-7147	
Louisville Barrel, Inc.	2007 Rowan	Louisville	KY	40203	(502) 776-3941	
Cincinnati Drum Service, Inc.	Post Pl & River Rd.	Ludlow	KY	41016	(606) 431-8335	
Gay-Bell Corporation	1306 S Main	Paris	KY	40361	(606) 987-4616	
Barrels, Inc.	7653 National Turnpike	Louisville	KY	40214	(502) 368-5359	
Ohio River Cooperage Co.	2000 S 9th	Louisville	KY	40208	(502) 634-4446	
Barrel Merchants, Inc.	3610 Camp Ground Rd.	Louisville	KY	40211	( ) 774-8919	
Container Products, Inc.	P.O. Box 23250	Harahan	LA	70183	( ) 733-6644	
Evans Cooperage Co., Inc.	1255 Peters Rd.	Harvey	LA	70058	( ) f368-6000	
Rheem Manufacturing Co.	P.O. Box 4027	New Orleans	LA	70178	(504) 734-2000	
Ballier's Steel Drum Service	8543 Old Gentilly Rd.		LA		(504) 241-2483	
Giacona Container Co.	121 Ind. Ave	Metairie	LA	70121	(504) 835-5465	
Inland Steel Container Co	325 N Cortez	New Orleans	LA	70119	(504) 488-6634	
Vermillion Drum Service		Maurice	LA	70555	(318) 893-8367	
Springfield Barrel Co., Inc.	Cottage	Wilbraham	MA	01095	(413) 596-4240	
ABC Barrel & Drum Co.	83 Ames	Brockton	MA	02402	( ) 584-7337	

Drum Reconditioning Inventory

Sorted By State

Company Name	Address	City	St	Zip	Telephone No.	Contact
Bancroft Barrel Co.	17 Village	Cambridge	MA	02143	( ) 547-0738	
Clark Steel Drum Co., Inc.	24 Caller	Peabody	MA	01960	( ) 531-0862	
Perry Barrel Co.	159 Ratcliffe	Fall River	MA	02723	( ) 674-6585	
Barrel Co., The	11605 Spruce Ave.	Beltsville	MD	20705	(301)	
Warring James T & Sons	4545 S St	Beaver Hts	MD		( ) 322-5400	
ABC Barrel & Drum Company	102 West Lantz	Detroit	MI	48203	(313) 891-1234	Brent Cassidy
West Cooperage Company	6200 Caniff	Detroit	MI	48212	(313) 891-7535	Joe or Steven Silberschien
Great Lakes Container Corp.	26555-T Evergreen	Southfield	MI	48076		
Maxi Container, In .	6000 Caniff	Detroit	MI	48212	(313) 891-3880	
Grace Container	14020 Warner	Livonia	MI	48154	(313) 525-0037	
Container Products, Inc.	14450 King	Riverview	MI	48192	( ) 479-4500	
General Container Sales	23056 East River	Grosse Ile	MI	48138	( ) 671-1717	
Semco Sealant & Adhesive Co.	35200 Automation Dr.	Clinton Twp	MI	49236	( ) 792-3520	
Allied Barrel & Drum Co.	20411 W 12 Mile	Southfield	MI	48076	( ) 358-2676	
Consolidated Container Corp.	735 N 3rd St.	Minneapolis	MN	55401	(612) 339-4831	
Grief Bros Corp	3755 University Ave. NE	Minneapolis	MN	55421	(612) 788-9118	
Minneapolis Bag & Barrel	Lumber Exchange Building	Minneapolis	MN	55402	(612) 333-1459	
Western Container Corp.	500 N 3rd St	Minneapolis	MN	55401	(612) 338-2413	
Minnesota Steel Drum Co.	3rd S & Valley	New Ulm	MN	56073	(507)354-4379	
A J Vetsch, Inc.	3919 SE Marion Rd.	Rochester	MN	55904	(507) 288-0671	
Industrial Steel Co.	293 Commercial	St Paul	MN	55106	(612) 227-9371	
Midway Can Co.	2341 Hampden Ave.	St Paul	MN	55114	(612) 774-1311	
Poor Richards, Inc.	400 Whitall	St Paul	MN	55101	(612) 774-1311	
Tilsner Carton Co.	319 Kellogg	St Paul	MN	55101	(612) 227-8261	
Midwest Barrel & Drum Co.	807 Farrington	St Paul	MN	55117	(612) 489-1911	
Gordon Iron & Metal Co.	207 Nelson	Stillwater	MN	55082	( ) 439-4327	
American Steel Container Company	North Plaza Building	Minneapolis	MN	55432	(612) 544-0880	
Great Lakes Container Corp.	1161 South 12th	Kansas City	MO		(816) 281-5770	Richard Greenwald
Drumtech, Inc.	P.O. Box 15150	St. Louis	MO	63119	(314) 647-3464	Bill Shocklee, General Manager
US Steel Products div	2391 Cassens Dr.	Fenton	MO	63026	(314) 343-7300	
Rheem Manufacturing Co.	9229 Ward Pkwy	Kansas City	MO	64114	(816) 523-6424	
United States Steel Corp.	Woodswether Rd.	Kansas City	MO	64105	(816) 221-8311	
Grief Brothers Corp	645 E. Elliot	Kirkwood	MO	63122	(314) 965-4820	
River City Drum, Inc.	9870 Big Bend Blvd	Kirkwood	MO	63122	(314) 822-1300	
Howell Stave Co.	Rfd 4	Mountain Grove	MO	65711	(417) 926-4128	
Continental Can Co.	8401 St Charles Rock	Overland	MO	63114	(314) 427-5500	
Independent Stave Co.	Hwy 19 N	Salem	MO	65560	(314) 729-7767	
Bristol Mfg Co.	2020 E Dale	Springfield	MO	65803	(417) 862-3545	
Lake Road Warehouse Co.	Lower Lake Rd.	St. Joseph	MO	64504	(816) 238-1100	
Archway Chemicle/Supply	4321 Chouteau	St Louis	MO	63110	(314) 533-4662	
C L Smith Co.	1311 S 39th	St Louis	MO	63110	(314) 771-1202	
Cherrick L Horseradish	2020 N 9th	St Louis	MO	63102	(314) 421-5431	
D J Etzkorn	10411 Clayton Rd.	St Louis	MO	63131	(314) 997-0084	
Gallagher Metal & Fiber	2022 E De Soto	St Louis	MO	63107	(314) 534-6250	
Meyer Container Co.	149 Carrol	St Louis	MO	63104	(314) 241-2262	

Drum Reconditioning Inventory

Sorted By State

Company Name	Address	City	St	Zip	Telephone No.	Contact
Mirax Chemical Products	4999 Flyer	St Louis	MO	63139	(314) 752-1500	
Thomas & English, Inc.	108 Mullanphy St.	St Louis	MO	63102	(314) 241-7771	
Hutchison-Witherup, Inc.	11802 S 71 Hwy	Grandview	MO	64030	(816) 763-6656	
Shank Army Surplus, Inc.	1312 Main	Joplin	MO	64801	(417) 623-8473	
David Sherman Corp	5050-A Kemper Ave.	St Louis	MO	63139	(314) 772-2626	
Sonford's General Mdse	926 S Vandeventer	St Louis	MO	63110	(314) 531-4110	
Packaging West, Inc.	1750 N Topping	Kansas City	MO	64126	(816) 241-1717	
Tri-Rinse, Inc.		St Louis	MO	63110	(314) 533-6411	
Van Leer Containers, Inc.	100 Industrial Dr.	Canton	MS	39046	(601) 859-2045	
Jackson Oil Products Company	800 N Bierdeman Rd.	Jackson	MS	39208	(601) 939-3131	
Winston Container	No. 1 Winston Container Road	Charlotte	NC	28205		
Academy Steel Drum	Ridge Road	Matthews	NC	28105		
McManus & Son Drum Co.,Inc.	5633 Old Pineville Rd.	Charlotte	NC	28210	(704) 527-6060	
Grief Bros Corporation	1701 N.Graham St.	Charlotte	NC	28206	(704) 333-3152	
Smith Container Corp.	1200-A Westinghouse Blvd.	Charlotte	NC	28210	(704) 588-6770	
Continental Fibre Drum Inc.	1515 Mockingbird Ln.	Charlotte	NC	28209	(704) 525-7111	
General Steel Drum Corp.	4500 South Blvd.	Charlotte	NC	28209	( ) 525-7149	
M & T Drum,Inc.	Highway 115	Huntersville	NC	28078	( ) 875-6014	
Tallent Drum Co.	Lowell Spencer Mountain Rd.	Lowell	NC	28098	( ) 824-1807	
Interstate Oil Products, Inc.	P.O. Box 412-T	Boonton	NJ	07005		
Avon Drum Corp	21 Avon Rd.	Springfield	NJ	07081	(201) 379-9072	
Fernicola Fibre & Steel Drums	261 Elm	Newark	NJ	07105	(201) 589-4894	
K T K Corporation	Meadow Rd.	Edison	NJ	08817	(201) 985-0447	
Superior Barrel & Drum	218 Crafton Ave.	Pitman	NJ	08071	(201) 589-6593	
Tri State Steel Drum Corp	55 Jacobus Ave.	Kearny	NJ	07032	(201) 344-2625	
Tunnel Barrel & Drum Co.	35 Triangle Blvd.	Carlstadt	NJ	07072	(201) 933-1444	
Westfall Ace Drum Co., Inc.	1545 New York Ave.	Trenton	NJ	08638	(201) 394-5129	
Bergen Barrel & Drum Co.,Inc.	4345 O'Brien Rd.	Kearny	NJ	07032	(201) 998-3500	
Capital Container & Drum	45 Verona Ave.	Newark	NJ	07104	(201) 484-3013	
Colwell Corporation	254 Little Falls Rd.	Fairfield	NJ	07006	(201) 785-8200	
Container Component, Inc.	405 South St.	Newark	NJ	07105	(201) 344-4451	
Donoher Dan & Co.,Inc.	222 Verona Ave.	Newark	NJ	07104	(201) 482-3222	
Eastern Steel Barrel Corp	4100 New Brunswick Ave.	Piscataway	NJ	08854	(201) 752-1211	
Frank Popola Barrel Co., Inc.	16 Thornton St.	Newark	NJ	07105	(201) 344-0581	
Howard Drum & Barrel Corp	814 Bond	Elizabeth	NJ	07201	(201) 352-2367	
Keith Industries, Inc.	236 Delancy	Newark	NJ	07105	(201) 589-8409	
Kernis Drum Corp	4345 O'Brien Rd.	Kearny	NJ	07032	(201) 998-0224	
Leibman L	1721 Kenneth Ave.	Union	NJ	07083	(201) 688-7893	
Lightman Drum Co., Inc	State Hwy No. 73	Berlin	NJ	08009	(609) 767-6644	
Mid-Atlantic Container Corp	1200 Blancke West	Linden	NJ	07036	(201) 862-1100	
Plyfiber Container Corp	Johnson Dr.	Raritan	NJ	08869	(201) 526-8333	
Popola Thos & Sons, Inc	92 Delancy St.	Newark	NJ	07105	(201) 589-3315	
Schock Steel Drum Co.	31 Noble	Newark	NJ	07114	(201) 824-7645	
Thornton Drum Rings	30 Stern Ave.	Springfield	NJ	07081	(201) 379-2620	
Nick Foglia Steel Drum Co.	150 State Hwy no. 10	E. Hanover Twp.	NJ	07936	(201) 428-9699	
Middlesex Qual.Container & Drum Inc	909 Somerset St.	Somerset	NJ	08873	(201) 545-3803	
Springfield Steel & Fibre Drum Co.	146 Lincoln Blvd.	Middlesex	NJ	08846	(201) 469-2515	

Drum Reconditioning Inventory

Sorted By State

Company Name	Address	City	St	Zip	Telephone No.	Contact
Allen-Stevens Drum Accessories Corp	27 Schoolhouse Rd.	Somerset	NJ	08873	(201) 469-3200	
Bergen Barrel & Drum Co.	11 Irene Ct.	Demarest	NJ	07627	(201) 768-9500	
C C Steel Drum Co.	1601 Edgar Rd. West	Linden	NJ	07036	(201) 862-4446	
Container Ring Co., Inc.	855 Woodruff La.	Elizabeth	NJ	07201	(201) 354-1900	
Continental Fibre Drum	400 Blair Rd.	Carteret	NJ	07008	(201) 969-0876	
Custom Container Corp.	4345 O'Brien Rd.	Kearny	NJ	07032	(201) 998-7902	
Jersey Steel Drum	9 Finderne Ave.	Bridgwater Twp.	NJ	08807	(201) 685-1100	
Finkelstein Louis	180 Beach	Jersey City	NJ	07307	(201) 795-2929	
Fogel Steel Drum Co.	8 Fanelli Dr.	Blackwood	NJ	08012	(609) 346-4455	
General Container Corporation	620 Ramsey Ave.	Hillside	NJ	07205	(201) 687-8233	
Grief Bros Corporation	24 W Lake Ave.	Rahway	NJ	07065	(201) 381-0200	
Multi-Modol Transport, Inc.	1201 Corbin	Elizabeth	NJ	07201		
Plant Industries, Inc.	777 Terrace Ave.	Hasbrouck Hts.	NJ	07604		
Rheem Manufacturing Company	1701 Edgar Rd.	Linden	NJ	07036		
Steel Shipping Container Institute	2204 Morris Ave.	Union	NJ	07083		
A & B Drum Co.	Hurffville Rd.	Deptford	NJ	08096	(201) 227-6766	
Demiduke Container Corp.	Delsea Dr.	New Sharon	NJ		(201) 468-6677	
Natico, Inc.	1600 National Hwy	Pennsauken	NJ	08110	(201) 665-2900	
Smith, J B Co.		Camden	NJ		(201) 546-5252	
State Steel Drum & Barrel Co.	900 Haddon Ave.	Collingswood	NJ	08108	(201)854-0770	
Toy Joseph & Sons	Roosevelt Ave.	Malaga	NJ	08382	(201) 694-2660	
Drum Service of Camden	1542 S. Broadway	Camden	NJ	08104	(201) 365-5539	
Owens-Illinois, Inc.	80 Plz West-one	Saddle Brook	NJ	07662	(201) 368-9380	
Thornton Closing Rings, Inc.	30 Stern Ave.	Springfield	NJ	07081	(201) 379-2620	
Van Leer Containers, Inc.	353 Danforth Ave.	Jersey City	NJ	07305	(201) 333-4700	
Packaging West, Inc.	5155 East 46th Ave.	Albuquerque	NM	87105	( ) 842-0546	
Riekes Container Company	100 Trumbull Ave. SE	Albuquerque	NM	87114	( ) 842-5700	
General Salvage Super	10140 2 N W	Albuquerque	NM	87114	( ) 898-1610	
Packaging West, Inc.	2440 Alamo SE	Albuquerque	NM	87106	(505) 842-0546	
Barrell Co.	3850 Losee Rd.	Las Vegas	NV		(702) 642-7785	
Reno Barrel Recycling	11925 Overland Rd.	Reno	NV	89506	( ) 972-6385	
Adelphi Container Corp	206-208-T N. 10th St.	Brooklyn	NY	11211		
Goodman Bros Steel Drum Co., Inc.	279 Frost	Brooklyn	NY	11211	(718) 782-3056	
ABM Steel Drum Co.	1050 Grand	Brooklyn	NY	11211	(718) 384-1616	
Menna & Son, Inc.	235 Kent Ave.	Brooklyn	NY	11211	(718) 388-4171	
Timmins Cooperage	220 Front	New York	NY	10038	233-3311	
Albany Interstate Signs, Inc.	4290 Albany St.	Colonie	NY	12212	(518) 456-7011	
Barrel Merchants	N E Industrial Park	Guilderland	NY	12084	( ) 861-8097	
Storonske N Cooperage Co., Inc.	6 Kraft Road	Castleton	NY	12033	( ) 477-7561	
Kaplan Container Corp	100 Despatch Rd.	E. Rochester	NY	14445	(716) 385-1760	
Bronstein Container Co., Inc.	2 Jamar Dr.	Fayetteville	NY	13066	(315) 446-7870	
L & H Empty Drums & Trucking	130 Buena Vista Ave.	Yonkers	NY	10701	(914) 963-6996	
Syracuse Barrel Co., Inc.	317 Burnet Ave.	Syracuse	NY	13203	(315) 479-7249	
A S Steel Drum Co.	619 E 82	Brooklyn	NY	11236	(718) 531-1680	

Drum Reconditioning Inventory

Sorted By State

Company Name	Address	City	St	Zip	Telephone No.	Contact
Allied Drum & Barrel Corp	15 Ron Ct.	Commack	NY	11725	( ) 543-4240	
Chem-Tainer Industries	361 Neptune Ave.	N Babylon	NY	11703	( ) 661-8300	
City Barrel Co.	421 Meeker Ave.	Brooklyn	NY	11222	(718) 388-9227	
Advance Barrel & Drum Co.	6830 Beaver Ave.	Cleveland	OH	44104		
Youngstown Barrel & Drum Co.	1041 Marble St.	Youngstown	OH	44502		
Van Leer Containers, Inc.	9612 Meech Ave.	Cleveland	OH	44105	(216) 341-9494	
Youngstown Barrel & Drum co.	1043 Marble	Youngstown	OH	44502	(216) 746-3277	
Brotsky Barrel & Drum Co.	950 Rhodes	Akron	OH	44307	( ) 253-4222	
Bloom Container Co.	1601 Champlain	Toledo	OH	43611	( ) 726-3021	
Sav-A-Barrel Corp.	334 Elmdale Rd.	Toledo	OH	43609	( ) 382-1435	
Hoffman Container Co.	1826 E. Livingston	Columbus	OH	43205	( ) 491-1110	
Berenfield Midwest Corp.	1229 Castle Dr.	Mason	OH	45040	( )398-1300	
City Barrel & Cooperage Co.	514 N Irwin	Dayton	OH	45403	( ) 253-6341	
Owens Illinois Inc.	8040 Hosbrook Rd.	Cincinnati	OH	45236	( ) 984-0100	
Scott Drum Service		Dayton	OH		( ) 859-0633	
Atlantic Packing Co.	1027 Ludlow Ave.	Cincinnati	OH	45223	( ) 559-0770	
Astro Container Co.	2795 E. Sharon Rd.	Cincinnati	OH	45241	( ) 771-1230	
Container Placement & Exchange	3400 Llewellyn Av.	Cumminsville	OH	45223	( ) 541-6726	
Flannagan Associates,Inc.	10999 Reed Hartman Hwy	Blue Ash	OH	45242	( ) 984-8880	
Northcoast Container Corp.	8806 Crane Ave.	Cleveland	OH	44105	( ) 441-6214	
Standard Pail & Drum Co.	8110 Preble	Cleveland	OH	44104	( ) 883-0075	
Container Products Inc.	7838 Iron St.	Masury	OH	44438		
Meyers Drum Co.	8435 N.E. Killingsworth	Portland	OR	97220	(503) 255-0553	
Reidel Environmental Services	P.O. Box 5007	Portland	OR	97208	(503) 286-4656	Roland Miller
Baldwin's Drum & Fiber	5732 NE Church	Portland	OR	97218	( ) 281-9150	
Recycling						
Shelton, JF Co.	3339 NW 26th	Portland	OR	97218	( ) 223-3944	
Wescomp, Inc.	17020 Upper Boones Ferry Rd.	Tigard	OR	97223	( ) 684-3066	
Continental Fibre Drum, Inc.	125 Strafford Ave.	Wayne	PA	19087	(716) 668-6698	
Calig Steel Drum Co.	1400 Flemming Ave.	McKees Rocks	PA	15136	( ) 771-6440	
All-Pak Barrels & Drums	2260 Roswell Dr.	Pittsburgh	PA	15205	( ) 922-7525	
Berenfield Steel Drum Co.	1050 Freeport Rd.	Pittsburgh	PA	15238	( ) 683-2410	
Rubin Saul J Barrel & Drum Co.	Mars-Cooperstown Rd.	Valencia	PA	16059	( ) 961-0346	
Malitovsky Cooperage Co.	3600 Smallman	Pittsburgh	PA	15201	( ) 682-1398	
Penn Barrel & Cooperage Co.	3127 Liberty Ave.	Pittsburgh	PA	15201	( ) 281-9618	
London, David & Co.	Carrington	Lincoln	RI	02865	( ) 728-1670	
Hedwin Corporation	Camp Croft Industrial Park	Spartanburg	SC	29301	( ) 585-2066	
Memphis Drum Servic	3299-T Tulane Rd.	Memphis	TN	38116	(901) 396-6484	
American Resource Recovery		Memphis	TN			
Sirco Systems,Inc.	705 Royal Ave.	Memphis	TN	38107	( ) 525-1767	
Tennessee Container	2790 Harvard Ave.	Memphis	TN	38112	( ) 452-1853	
Corporation						
Odessa Drum Co.,Inc.	4810 Andrews Hwy	Odessa	TX	79762	(915) 366-4454	
Trans Star Supply	6425 Boeing Dr. B-11	El Paso	TX	79925	( ) 779-0012	
Dixie Drum Co.	515 Seguin St	San Antonio	TX	78208	( ) 226-8151	
Lehmen Phillips, Inc.	2550 Glendale Ave.	Houston	TX	77012	( ) 624-2169	
Davis Equiment Co.	3701 W Alabama	Houston	TX	77027	( ) 522-5032	
All Poly Drum Service & Supply	1814 W Main	Houston	TX	77098	( ) 471-9545	
Co.						

Drum Reconditioning Inventory

Sorted By State

Company Name	Address	City	St	Zip	Telephone No.	Contact
May Cooperage Co.	2706 Mills	Houston	TX	77026	( ) 223-9727	
Williams Barrel & Drum Co.	8011 Birmingham	Houston	TX	77028	( ) 635-4425	
Swift Barrel Co.	1708 Sanger	Dallas	TX	75215	( ) 421-0951	
Pennco, J.C.	4927 Higdon Rd.	San Antonio	[illegible]		( ) 633-2276	
Slimp Oil Co.	604 Carolina	San Antotio	TX	78210	( ) 533-5151	
Utah Barrel and Drum	370 West 900 South	Salt Lake City	UT	84104		
American Barrel & Drum	49 South 600 West	Salt Lake City	UT	84101		
Beehive Barrel & Drum	1052 S Redwood Rd.	Salt Lake City	UT	84104	( ) 973-8322	
Virginia Scrap Iron and Metal	1620 Jefferson St.	Roanoke	VA	24016	(703) 343-3667	
Airo Service, Inc.	410 E. 11th St.	Tacoma	WA	98421	(206) 383-4916	Dave Berrens or Dan Nobel
Budget Oil	N. 111 Greene	Spokane	WA	99202	(509) 535-7701	Bill [illegible]
Crosbey & Overton, Inc.	P.O. Box 1085	Kent	WA	98032	(206) 872-8030	Scott Ferris
Crowley Environmental Services, Co.	3400 E. Marginal Way South	Seattle	WA	98108	(206) 583-8100	Jerry Plank
Don Golden Co., Inc.	4704 S. Washington	Tacoma	WA	98409	(206) 474-0148	Don Golden
Global Diving and Salvage, Inc.	2763 13th Ave., SW	Seattle	WA	98134	(206) 623-0621	Greg Harem
Northwest Enviroservice, Inc.	P.O. Box 24282	Seattle	WA	98124	(206) 622-1090	Larry or John Sherill
Rheem Manufacturing	1702 Port of Tacoma Rd.	Tacoma	WA	98421	(206) 845-7252	Vern or Fritz
Central Barrel & Drum Co.	5425 Waupun Rd.	Oshkosh	WI	54901	( ) 235-2730	
J K Drum Co.	615 W Wolf River Ave	New London	WI	54961	( ) 982-7100	
Mid-America Steel Drum, Inc	8570 S Chicago Rd. Oak Crk	Milwaukee	WI	53202	( ) 762-1114	
Republic Container Company	Viscose Rd.	Nitro	WV	25143	( ) 755-4325	
Casper Barrel & Drum Co.	3060 W. Yellowstone Hwy	Casper	WY	82604	( ) 234-5764	

APPENDIX C. RECONDITIONED DOT SPECIFICATIONS: 17C, 17E, AND 17H STEEL DRUMS

RECONDITIONED DOT SPECIFICATIONS: 17C, 17E, AND 17H STEEL DRUMS

● Reuse of Containers (Reference Section 173.28, Title 49, CFR)

Containers used more than once (refilled and reshipped after having been previously emptied) must be in such condition, including closure devices and cushioning materials, that they comply in all respects with the prescribed requirements for those containers.

Specifications 17C, 17E, and 17H steel drums from which contents have been removed, may be reused as prescribed in this part as packagings for shipment of flammable liquids, flammable solids, oxidizing materials, radioactive materials, and corrosive liquids covered by Sections 173.249 and 173.249(a), only if the following requirements, in addition to the other requirements of this section, are complied with prior to each reuse:

Note: Corrosive solids and any other hazardous materials that are not required to be shipped in DOT Specification Containers providing, the commodity being packaged will not react unfavorably with the steel container. The major requirements are outlined below:

● Visual Inspection:

Drums must be thoroughly cleaned to remove all residue and foreign matter. Deterioration or defects: Parts that are weak, broken, or otherwise deteriorated must be replaced. Any drums which show evidence of deterioration such as:

(1) Visible Pitting
(2) Creases
(3) Significant reduction in parent metal thickness from rust, corrosion, metal fatigue; or other material defects or which cannot be returned to its original shape and contour "Does not qualify" for reuse. Repairs must be made in an efficient manner in accordance with requirements for materials and construction as prescribed in the regulations for new containers.

Closure devices and parts must be removed (if removable), and inspected for defects. Each open-head cover gasket must be replaced.

● Air Pressure Test for Leakage

The entire surface of each closed-head drum and each open-head drum, except for its removable head and adjacent chime area must be tested for leakage by constant internal air pressure.

Published by THE BUREAU OF NATIONAL AFFAIRS, INC., WASHINGTON, D.C. 20037

The leakage test must be conducted by submersion under water, by completely covering the surface with soap suds or oil, or by some other method that will be considered "Equally Sensitive". Leakers shall be rejected or repaired and retested. Repair by method used in constructing container, not by soldering. The air pressure must be maintained for a period of time sufficient to permit a complete inspection for leaks.

The minimum constant internal air pressure for the test must be as follows:

Spec. No.	Capacity	Minimum Test Pressure p.s.i.
17C	All	15
17E	Over 12 gallons	7
	12 gallons, or less	5
17H	Over 12 gallons	7
	12 gallons, or less	5

- Equally Sensitive Test:

Leakage Test Methods Considered "Equally Sensitive" For Reconditioned 17C, 17E and 17H Drums.

A number of questions have been raised concerning what other test methods would be considered "Equally Sensitive". Any test procedure is considered by the Office of Operations and Enforcement to be as "Equally Sensitive" as the methods specified in Section 173.28(m)(2) of the Hazardous Materials Regulations if it---

1. Will subject a drum to constant internal air pressure (at equilibrium with the system closed) at the specified minimum pressure.
2. Utilizes an accurate pressure gauge or other measuring device which will permit readings to an accuracy of .10 psig.
3. Allows for sufficient time to discover leaks; and
4. Is reproducible.

A visual inspection procedure that does not employ the minimum air pressure specified may not be used to qualify a drum for reuse under Section 173.28(m)(2), Title 49, CFR.

Other test procedures not meeting the prescribed tests or all of the above "Equally Sensitive" criteria are not considered adequate to meet the requirements of these standards unless specific approval has been obtained from the Hazardous Materials Regulations Board.

● Marking:

All previous test markings, commodity identification markings and labels must be removed.

All drums that qualify for reuse must be marked on the body within 10 inches of the top with the following information:

(1) "Tested"

(2) The Month and Year it was Tested

(3) DOT Registration Number of the reconditioner.

Markings must be at least 1/4 inch figures and the letters on contrasting background.

EXAMPLE: TESTED 2/74
DOT R1000

Any drum meeting one specification which has been altered to meet another specification must be capable of meeting the new specification in all respects. Drums converted to meet another specification must bear the original specification markings.

The old and new specification identification in conjunction with the markings shown above are required.

EXAMPLE: 17E/17H
TESTED 2/74
DOT R1000

The DOT registration number required for this marking must be obtained from:

Department of Transportation
Research and Special Programs Administration
Materials Transportation Bureau
Hazardous Materials Enforcement Division (DMT-12)
Washington, D.C. 20590

RECONDITIONED DOT SPECIFICATIONS: 17C, 17E, AND 17H DRUMS

DOT 17H

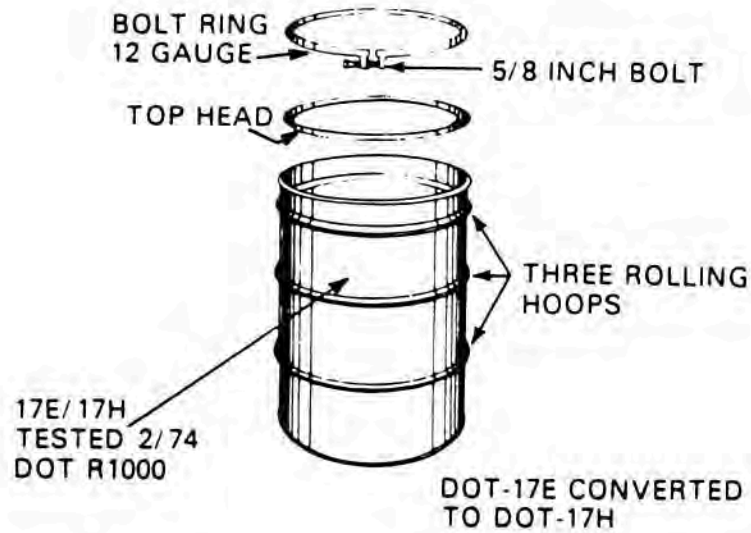

(DOT 17E)
Tight-head 20/18-gauge 55-gal. drum

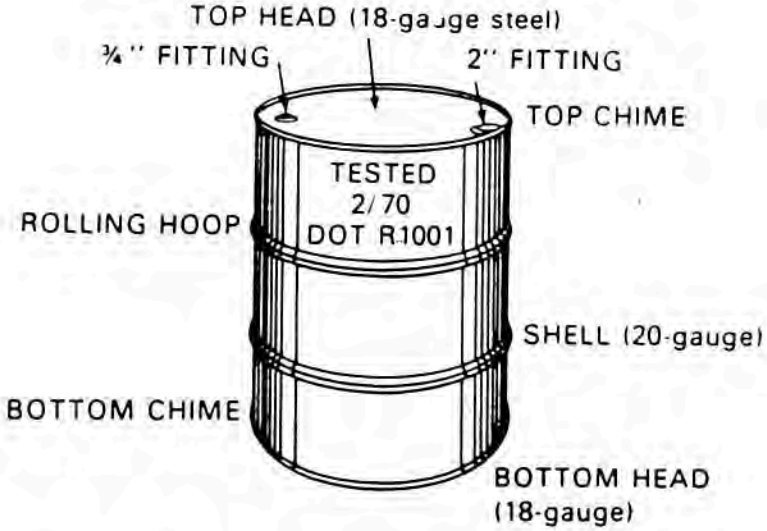

This material may be reproduced without special permission from this office.

Department of Transportation
Research and Special Programs Administration
Materials Transportation Bureau
Information Services Division (DMT-43)
Washington, D.C. 20590

REPRINTED SEPTEMBER 1980

APPENDIX D. SELECTED COST DATA FROM THE METAL FINISHING DEVELOPMENT DOCUMENT

DEVELOPMENT DOCUMENT

for

EFFLUENT LIMITATIONS GUIDELINES

NEW SOURCE PERFORMANCE STANDARDS

for the

METAL FINISHING POINT SOURCE CATEGORY

William D. Ruckelshaus
Administrator

Steven Schatzow
Director, Office of Water Regulations and Standards

Jeffery Denit
Director, Effluent Guidelines Division

Edward Stigall, P.E.
Chief, Inorganic Chemicals Branch

Richard Kinch
Project Officer

June 1983

Effluent Guidelines Division
Office of Water Regulations and Standards
U.S. Environmental Protection Agency
Washington, D.C. 20406

SEGREGATED OILY WASTE TREATMENT SYSTEM - OPTION 1

The Option 1 system for the treatment of segregated oily wastewater consists of emulsion breaking followed by skimming, as is illustrated in Figure 7-29. The emulsion breaking is effected by the addition of chemicals (such as alum or polymers) to accomplish coagulation and flocculation of the oily wastes. These floating oily wastes are then removed via skimming to complete the Option 1 level of treatment.

Treatment alternatives to the Option 1 system that are presently employed in the metal finishing industry include ultrafiltration, dissolved air flotation, coalescing gravity separators, thermal emulsion breaking and the use of centrifugation. These alternative techniques, as well as contractor hauling, are described in the subsection entitled "Additional Oily Waste Treatment Techniques."

The Option 1 treatment system is employed extensively within the metal finishing data base for treatment of segregated oily waste. However, because of the increasing price of oil, metal finishing plants are tending toward the use of treatment techniques such as ultrafiltration, reverse osmosis, or centrifugation for the recovery and direct reuse of oils.

The following paragraphs describe the emulsion breaking and skimming tecniques that are applicable to the removal of oily wastes for Option 1.

Emulsion Breaking

Emulsion breaking is a process by which emulsified oils are removed from oil/water mixtures. Emulsified oils are commonly used as coolants, lubricants, and antioxidants for many of the unit operations performed in the Metal Finishing Category. Methods of emulsion breaking include a variety of chemical processes, thermal processes, and combinations of the two processes. These techniques are discussed in the following paragraphs.

Chemical emulsion breaking can be accomplished either as a batch process or a continuous process. A typical system (with skimming incorporated) is illustrated in Figure 7-30. The mixture of emulsified oils and water is initially treated by the addition of chemicals to the wastewater. A means of agitation (either mechnical or by increasing the turbulence of the wastewater stream) is provided to ensure that the chemical added and the emulsified oils are adequately mixed to break the oil/water emulsion bond. Finally the oily residue (commonly called scum) that results rises to the surface and is separated from the remaining wastewater by a skimming or decanting process. The skimming process can be accomplished by any of the many types

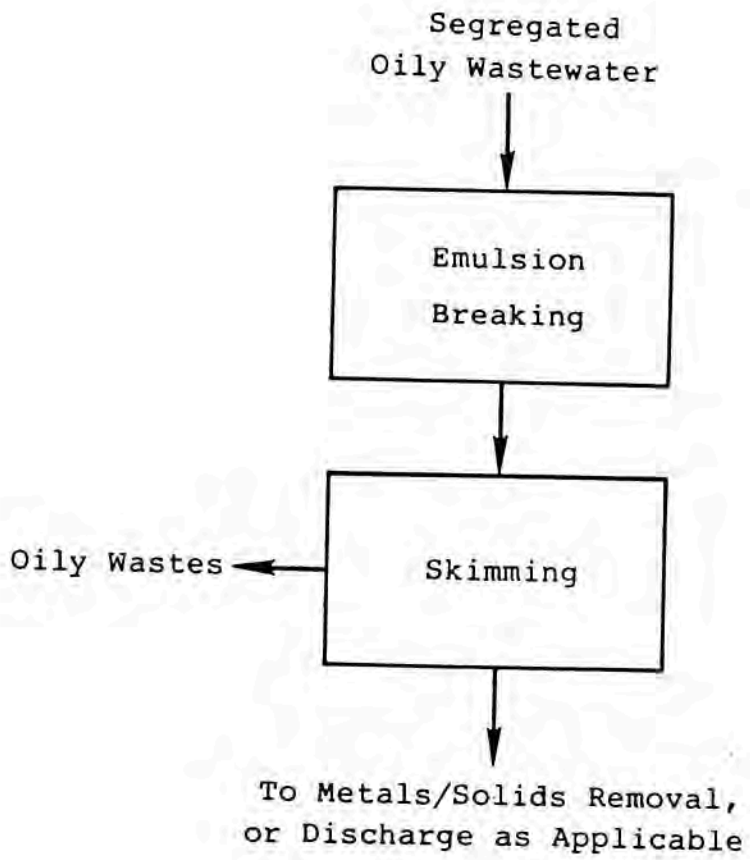

FIGURE 7-29

TREATMENT OF SEGREGATED OILY WASTES
OPTION 1