O'Reilly, Talbot & Okun
ENGINEERING ASSOCIATES

May 11, 2017
File No. 5174-01-09

Brian Allen, Chief Financial and Operations Officer
Worcester Public Schools
20 Irving Street
Worcester, Massachusetts 01609

Subject: Results of Doherty High School PCB Air Monitoring

Dear Mr. Allen:

In accordance with our proposal we have completed the indoor air monitoring program for PCBs at Doherty High School. As you know we collected the air samples between 3:00 and 10:00 PM on April 24th, 2017. The samples were transported to Alpha Analytical Laboratories of Westborough and Hopkinton MA the following day. Results of the laboratory testing were transmitted to our office on May 10th, 2017.

The report from Alpha Analytical is attached to this letter along with a table prepared by us that summarizes the laboratory results.

Description of the Sampling and Analysis Method

The method used for the sampling and analysis of polychlorinated biphenyls (PCBs) in the air at Doherty High School was the same as that used by us at Burncoat High School, which is consistent with EPA Method-10A, a copy of which is attached to this letter report. The procedure is based on the adsorption of PCBs from ambient air onto polyurethane foam (PUF) sample media. According to EPA, this low volume PUF sampling procedure is applicable to PCB concentrations ranging from 0.001 to 50 ug/m3 over 4- to 24-hour sampling periods.

The limits of detection for the method depends primarily on the volume of air that passes through the PUF sample media; for the Doherty High School sampling our goal was to achieve a detection limit of less than 100ng/m^3. In practice our sample volumes were slightly less than 1 cubic meter (equal to 1,000 liters) and this gave us a detection limit of less than 15 ng/m^3 for all of the samples. The detection limits we achieved were better than our goal.

Quality Assurance

Quality assurance was assessed through the use of quality control samples by OTO (one replicate sample, one background sample, and one field blank sample) and also by the laboratory's analysis of surrogate spike samples.

Each of the quality assurance objectives for the sampling and analysis program were satisfactorily achieved.

Air Testing Results

The results of the air testing program are summarized in Table 1 attached to this letter report. Overall, the results ranged from < 11 ng/m^3 in room 106 to a high of 156 ng/m^3 in the Auditorium. All results were well less than the EPA recommended levels for adults in schools (500 ng/m^3) and for high school students (600 ng/m^3).

In our opinion these results are consistent with PCB air concentrations that are well below EPA's recommended levels for PCBs in schools and thus they would not be expected to pose a health risk to students or staff. If you have any questions please contact me.

Sincerely,
O'Reilly, Talbot & Okun Associates, Inc.

James D. Okun, LSP
Principal

Attachments: Table 1
Alpha Analytical Laboratories, Inc. Report
EPA Method-10A

Table 1
PCB Air Sampling Results[1] Doherty High School - Worcester MA

Sample Location[2]	Sample Volume[3]	PCB in Sample[4]	PCB Air Concentration[5]	EPA Criteria[6]	
				Students	Adults
	(liters - l)	(nanograms - ng)	(ng per cubic meter - ng/m^3)	(ng/m^3)	(ng/m^3)
204	865.00	13.9	16.1	600	500
210	845.70	<10	<12	600	500
313B	872.90	< 10	<12	600	500
310	840	51.2	61.0	600	500
406	857.50	<10	<12	600	500
423	812.10	< 10	<12	600	500
Cafetaria	862.40	< 10	<12	600	500
106	886.60	< 10	<11	600	500
Main Office	802.5	81.5	102	600	500
Main Office Replicate	797.50	65.2	81.8	600	500
Auditorium	787.50	123	156	600	500
Outside	779.10	<10	<13	NA	NA
Field Blank	NA	< 10	NA	NA	NA

Notes:

1. Samples collected on April 24,2017 using polyurethane foam (PUF) cartridges and calibrated sampling pumps per EPA Method TO-10A.
2. Sample locations are room numbers in Doherty HS.
3. Sample volume is the amount of air drawn through the sampling cartridge.
4. PCB in sample is the total mass of PCBs detected on the sample cartridge in nanograms, equal to one billionth of a gram.
5. PCB concentration in air is calculated dividing the amount of PCB in a sample by the volume of the sample and multiplying this result by 1,000 l/m^3 (liters per meter cubed).
6. These are EPA's exposure levels for evaluation PCBs in school air, which may be found at: https://www.epa.gov/pcbs/exposure-levels-evaluating-polychlorinated-biphenyls-pcbs-indoor-school-air

ANALYTICAL REPORT

Lab Number:	L1713007
Client:	O'Reilly, Talbot & Okun Associates 69 Milk Street Suite 218 Westborough, MA 01581
ATTN:	Jim Okun
Phone:	(508) 366-6409
Project Name:	DOHERTY HS
Project Number:	Not Specified
Report Date:	05/10/17

The original project report/data package is held by Alpha Analytical. This report/data package is paginated and should be reproduced only in its entirety. Alpha Analytical holds no responsibility for results and/or data that are not consistent with the original.

Certifications & Approvals: MA (M-MA030), NH NELAP (2062), NJ NELAP (MA015), CT (PH-0141), FL (E87814), IL (200081), LA (85084), ME (MA00030), MD (350), NY (11627), NC (685), OH (CL106), PA (68-02089), RI (LAO00299), TX (T104704419), VT (VT-0015), VA (460194), WA (C954), US Army Corps of Engineers, USDA (Permit #P330-13-00067), USFWS (Permit #LE2069641).

320 Forbes Boulevard, Mansfield, MA 02048-1806
508-822-9300 (Fax) 508-822-3288 800-624-9220 - www.alphalab.com

Project Name: DOHERTY HS
Project Number: Not Specified

Lab Number: L1713007
Report Date: 05/10/17

Alpha Sample ID	Client ID	Matrix	Sample Location	Collection Date/Time	Receive Date
L1713007-01	DOH42417204-01	AIR MEDIA	WORCESTER MA	04/24/17 21:01	04/25/17
L1713007-02	DOH42417210-02	AIR MEDIA	WORCESTER MA	04/24/17 21:07	04/25/17
L1713007-03	DOH42417313B-03	AIR MEDIA	WORCESTER MA	04/24/17 21:13	04/25/17
L1713007-04	DOH42417310-04	AIR MEDIA	WORCESTER MA	04/24/17 21:17	04/25/17
L1713007-05	DOH42417406-05	AIR MEDIA	WORCESTER MA	04/24/17 21:30	04/25/17
L1713007-06	DOH42417423-06	AIR MEDIA	WORCESTER MA	04/24/17 21:23	04/25/17
L1713007-07	DOH42417CAF-07	AIR MEDIA	WORCESTER MA	04/24/17 22:02	04/25/17
L1713007-08	DOH42417106-08	AIR MEDIA	WORCESTER MA	04/24/17 21:58	04/25/17
L1713007-09	DOH42417MO-09	AIR MEDIA	WORCESTER, MA	04/24/17 21:45	04/25/17
L1713007-10	DOH42417MOR-10	AIR MEDIA	WORCESTER, MA	04/24/17 21:49	04/25/17
L1713007-11	DOH42417AP-11	AIR MEDIA	WORCESTER, MA	04/24/17 21:53	04/25/17
L1713007-12	DOH42417OS-12	AIR MEDIA	WORCESTER, MA	04/24/17 21:39	04/25/17
L1713007-13	DOH42417FB-13	AIR MEDIA	WORCESTER, MA	04/24/17 00:00	04/25/17

Project Name: DOHERTY HS
Project Number: Not Specified

Lab Number: L1713007
Report Date: 05/10/17

Case Narrative

The samples were received in accordance with the Chain of Custody and no significant deviations were encountered during the preparation or analysis unless otherwise noted. Sample Receipt, Container Information, and the Chain of Custody are located at the back of the report.

Results contained within this report relate only to the samples submitted under this Alpha Lab Number and meet NELAP requirements for all NELAP accredited parameters unless otherwise noted in the following narrative. The data presented in this report is organized by parameter (i.e. VOC, SVOC, etc.). Sample specific Quality Control data (i.e. Surrogate Spike Recovery) is reported at the end of the target analyte list for each individual sample, followed by the Laboratory Batch Quality Control at the end of each parameter. Tentatively Identified Compounds (TICs), if requested, are reported for compounds identified to be present and are not part of the method/program Target Compound List, even if only a subset of the TCL are being reported. If a sample was re-analyzed or re-extracted due to a required quality control corrective action and if both sets of data are reported, the Laboratory ID of the re-analysis or re-extraction is designated with an "R" or "RE", respectively. When multiple Batch Quality Control elements are reported (e.g. more than one LCS), the associated samples for each element are noted in the grey shaded header line of each data table. Any Laboratory Batch, Sample Specific % recovery or RPD value that is outside the listed Acceptance Criteria is bolded in the report. All specific QC information is also incorporated in the Data Usability format of our Data Merger tool where it can be reviewed along with any associated usability implications. Soil/sediments, solids and tissues are reported on a dry weight basis unless otherwise noted. Definitions of all data qualifiers and acronyms used in this report are provided in the Glossary located at the back of the report.

In reference to questions H (CAM) or 4 (RCP) when "NO" is checked, the performance criteria for CAM and RCP methods allow for some quality control failures to occur and still be within method compliance. In these instances the specific failure is not narrated but noted in the associated QC table. The information is also incorporated in the Data Usability format of our Data Merger tool where it can be reviewed along with any associated usability implications.

Please see the associated ADEx data file for a comparison of laboratory reporting limits that were achieved with the regulatory Numerical Standards requested on the Chain of Custody.

HOLD POLICY
For samples submitted on hold, Alpha's policy is to hold samples (with the exception of Air canisters) free of charge for 21 calendar days from the date the project is completed. After 21 calendar days, we will dispose of all samples submitted including those put on hold unless you have contacted your Client Service Representative and made arrangements for Alpha to continue to hold the samples. Air canisters will be disposed after 3 business days from the date the project is completed.

Please contact Client Services at 800-624-9220 with any questions.

Project Name:	DOHERTY HS	**Lab Number:**	L1713007
Project Number:	Not Specified	**Report Date:**	05/10/17

Case Narrative (continued)

PCBs in Air

I, the undersigned, attest under the pains and penalties of perjury that, to the best of my knowledge and belief and based upon my personal inquiry of those responsible for providing the information contained in this analytical report, such information is accurate and complete. This certificate of analysis is not complete unless this page accompanies any and all pages of this report.

Authorized Signature: Christopher J. Anderson

Title: Technical Director/Representative

Date: 05/10/17

ORGANICS

PCBS

Project Name: DOHERTY HS
Project Number: Not Specified

Lab Number: L1713007
Report Date: 05/10/17

SAMPLE RESULTS

Lab ID: L1713007-01
Client ID: DOH42417204-01
Sample Location: WORCESTER MA

Matrix: Air Media
Analytical Method: 105,8270D-SIM/680(M)
Analytical Date: 05/05/17 10:13
Analyst: MJS

Volume of Air: --

Date Collected: 04/24/17 21:01
Date Received: 04/25/17
Field Prep: Not Specified
Extraction Method: EPA 3540C
Extraction Date: 04/28/17 12:51

Parameter	Result	Qualifier	Units	RL	MDL	Dilution Factor
PCB Homologs by GC/MS-SIM (LowVol) - Mansfield Lab						
Monochlorobiphenyls	ND		ng/cart	10.0	--	1
Dichlorobiphenyls	ND		ng/cart	10.0	--	1
Trichlorobiphenyls	13.9		ng/cart	10.0	--	1
Tetrachlorobiphenyls	ND		ng/cart	10.0	--	1
Pentachlorobiphenyls	ND		ng/cart	10.0	--	1
Hexachlorobiphenyls	ND		ng/cart	10.0	--	1
Heptachlorobiphenyls	ND		ng/cart	10.0	--	1
Octachlorobiphenyls	ND		ng/cart	10.0	--	1
Nonachlorobiphenyls	ND		ng/cart	10.0	--	1
Decachlorobiphenyl	ND		ng/cart	10.0	--	1
Total Homologs	13.9		ng/cart	10.0	--	1

Surrogate	% Recovery	Qualifier	Acceptance Criteria
Cl3-BZ#19-C13	75		50-125
Cl8-BZ#202-C13	78		50-125

Project Name: DOHERTY HS
Project Number: Not Specified

Lab Number: L1713007
Report Date: 05/10/17

SAMPLE RESULTS

Lab ID: L1713007-02
Client ID: DOH42417210-02
Sample Location: WORCESTER MA

Matrix: Air Media
Analytical Method: 105,8270D-SIM/680(M)
Analytical Date: 05/05/17 11:27
Analyst: MJS

Volume of Air: --

Date Collected: 04/24/17 21:07
Date Received: 04/25/17
Field Prep: Not Specified
Extraction Method: EPA 3540C
Extraction Date: 04/28/17 12:51

Parameter	Result	Qualifier	Units	RL	MDL	Dilution Factor
PCB Homologs by GC/MS-SIM (LowVol) - Mansfield Lab						
Monochlorobiphenyls	ND		ng/cart	10.0	--	1
Dichlorobiphenyls	ND		ng/cart	10.0	--	1
Trichlorobiphenyls	ND		ng/cart	10.0	--	1
Tetrachlorobiphenyls	ND		ng/cart	10.0	--	1
Pentachlorobiphenyls	ND		ng/cart	10.0	--	1
Hexachlorobiphenyls	ND		ng/cart	10.0	--	1
Heptachlorobiphenyls	ND		ng/cart	10.0	--	1
Octachlorobiphenyls	ND		ng/cart	10.0	--	1
Nonachlorobiphenyls	ND		ng/cart	10.0	--	1
Decachlorobiphenyl	ND		ng/cart	10.0	--	1
Total Homologs	ND		ng/cart	10.0	--	1

Surrogate	% Recovery	Qualifier	Acceptance Criteria
Cl3-BZ#19-C13	84		50-125
Cl8-BZ#202-C13	84		50-125

Project Name: DOHERTY HS
Project Number: Not Specified

Lab Number: L1713007
Report Date: 05/10/17

SAMPLE RESULTS

Lab ID: L1713007-03
Client ID: DOH42417313B-03
Sample Location: WORCESTER MA

Matrix: Air Media
Analytical Method: 105,8270D-SIM/680(M)
Analytical Date: 05/05/17 12:41
Analyst: MJS

Volume of Air: --

Date Collected: 04/24/17 21:13
Date Received: 04/25/17
Field Prep: Not Specified
Extraction Method: EPA 3540C
Extraction Date: 04/28/17 12:51

Parameter	Result	Qualifier	Units	RL	MDL	Dilution Factor
PCB Homologs by GC/MS-SIM (LowVol) - Mansfield Lab						
Monochlorobiphenyls	ND		ng/cart	10.0	--	1
Dichlorobiphenyls	ND		ng/cart	10.0	--	1
Trichlorobiphenyls	ND		ng/cart	10.0	--	1
Tetrachlorobiphenyls	ND		ng/cart	10.0	--	1
Pentachlorobiphenyls	ND		ng/cart	10.0	--	1
Hexachlorobiphenyls	ND		ng/cart	10.0	--	1
Heptachlorobiphenyls	ND		ng/cart	10.0	--	1
Octachlorobiphenyls	ND		ng/cart	10.0	--	1
Nonachlorobiphenyls	ND		ng/cart	10.0	--	1
Decachlorobiphenyl	ND		ng/cart	10.0	--	1
Total Homologs	ND		ng/cart	10.0	--	1

Surrogate	% Recovery	Qualifier	Acceptance Criteria
Cl3-BZ#19-C13	82		50-125
Cl8-BZ#202-C13	83		50-125

Project Name: DOHERTY HS
Project Number: Not Specified

Lab Number: L1713007
Report Date: 05/10/17

SAMPLE RESULTS

Lab ID: L1713007-04
Client ID: DOH42417310-04
Sample Location: WORCESTER MA

Matrix: Air Media
Analytical Method: 105,8270D-SIM/680(M)
Analytical Date: 05/05/17 13:56
Analyst: MJS

Volume of Air: --

Date Collected: 04/24/17 21:17
Date Received: 04/25/17
Field Prep: Not Specified
Extraction Method: EPA 3540C
Extraction Date: 04/28/17 12:51

Parameter	Result	Qualifier	Units	RL	MDL	Dilution Factor
PCB Homologs by GC/MS-SIM (LowVol) - Mansfield Lab						
Monochlorobiphenyls	ND		ng/cart	10.0	--	1
Dichlorobiphenyls	ND		ng/cart	10.0	--	1
Trichlorobiphenyls	ND		ng/cart	10.0	--	1
Tetrachlorobiphenyls	28.1		ng/cart	10.0	--	1
Pentachlorobiphenyls	23.1		ng/cart	10.0	--	1
Hexachlorobiphenyls	ND		ng/cart	10.0	--	1
Heptachlorobiphenyls	ND		ng/cart	10.0	--	1
Octachlorobiphenyls	ND		ng/cart	10.0	--	1
Nonachlorobiphenyls	ND		ng/cart	10.0	--	1
Decachlorobiphenyl	ND		ng/cart	10.0	--	1
Total Homologs	51.2		ng/cart	10.0	--	1

Surrogate	% Recovery	Qualifier	Acceptance Criteria
Cl3-BZ#19-C13	87		50-125
Cl8-BZ#202-C13	93		50-125

Project Name: DOHERTY HS
Project Number: Not Specified

Lab Number: L1713007
Report Date: 05/10/17

SAMPLE RESULTS

Lab ID: L1713007-05
Client ID: DOH42417406-05
Sample Location: WORCESTER MA

Matrix: Air Media
Analytical Method: 105,8270D-SIM/680(M)
Analytical Date: 05/05/17 15:10
Analyst: MJS

Volume of Air: --

Date Collected: 04/24/17 21:30
Date Received: 04/25/17
Field Prep: Not Specified
Extraction Method: EPA 3540C
Extraction Date: 04/28/17 12:51

Parameter	Result	Qualifier	Units	RL	MDL	Dilution Factor
PCB Homologs by GC/MS-SIM (LowVol) - Mansfield Lab						
Monochlorobiphenyls	ND		ng/cart	10.0	--	1
Dichlorobiphenyls	ND		ng/cart	10.0	--	1
Trichlorobiphenyls	ND		ng/cart	10.0	--	1
Tetrachlorobiphenyls	ND		ng/cart	10.0	--	1
Pentachlorobiphenyls	ND		ng/cart	10.0	--	1
Hexachlorobiphenyls	ND		ng/cart	10.0	--	1
Heptachlorobiphenyls	ND		ng/cart	10.0	--	1
Octachlorobiphenyls	ND		ng/cart	10.0	--	1
Nonachlorobiphenyls	ND		ng/cart	10.0	--	1
Decachlorobiphenyl	ND		ng/cart	10.0	--	1
Total Homologs	ND		ng/cart	10.0	--	1

Surrogate	% Recovery	Qualifier	Acceptance Criteria
Cl3-BZ#19-C13	84		50-125
Cl8-BZ#202-C13	85		50-125

Project Name: DOHERTY HS
Project Number: Not Specified

Lab Number: L1713007
Report Date: 05/10/17

SAMPLE RESULTS

Lab ID: L1713007-06
Client ID: DOH42417423-06
Sample Location: WORCESTER MA

Matrix: Air Media
Analytical Method: 105,8270D-SIM/680(M)
Analytical Date: 05/05/17 16:24
Analyst: MJS

Volume of Air: --

Date Collected: 04/24/17 21:23
Date Received: 04/25/17
Field Prep: Not Specified
Extraction Method: EPA 3540C
Extraction Date: 04/28/17 12:51

Parameter	Result	Qualifier	Units	RL	MDL	Dilution Factor
PCB Homologs by GC/MS-SIM (LowVol) - Mansfield Lab						
Monochlorobiphenyls	ND		ng/cart	10.0	--	1
Dichlorobiphenyls	ND		ng/cart	10.0	--	1
Trichlorobiphenyls	ND		ng/cart	10.0	--	1
Tetrachlorobiphenyls	ND		ng/cart	10.0	--	1
Pentachlorobiphenyls	ND		ng/cart	10.0	--	1
Hexachlorobiphenyls	ND		ng/cart	10.0	--	1
Heptachlorobiphenyls	ND		ng/cart	10.0	--	1
Octachlorobiphenyls	ND		ng/cart	10.0	--	1
Nonachlorobiphenyls	ND		ng/cart	10.0	--	1
Decachlorobiphenyl	ND		ng/cart	10.0	--	1
Total Homologs	ND		ng/cart	10.0	--	1

Surrogate	% Recovery	Qualifier	Acceptance Criteria
Cl3-BZ#19-C13	82		50-125
Cl8-BZ#202-C13	85		50-125

Project Name: DOHERTY HS
Project Number: Not Specified

Lab Number: L1713007
Report Date: 05/10/17

SAMPLE RESULTS

Lab ID: L1713007-07
Client ID: DOH42417CAF-07
Sample Location: WORCESTER MA

Matrix: Air Media
Analytical Method: 105,8270D-SIM/680(M)
Analytical Date: 05/05/17 17:38
Analyst: MJS

Volume of Air: --

Date Collected: 04/24/17 22:02
Date Received: 04/25/17
Field Prep: Not Specified
Extraction Method: EPA 3540C
Extraction Date: 04/28/17 12:51

Parameter	Result	Qualifier	Units	RL	MDL	Dilution Factor
PCB Homologs by GC/MS-SIM (LowVol) - Mansfield Lab						
Monochlorobiphenyls	ND		ng/cart	10.0	--	1
Dichlorobiphenyls	ND		ng/cart	10.0	--	1
Trichlorobiphenyls	ND		ng/cart	10.0	--	1
Tetrachlorobiphenyls	ND		ng/cart	10.0	--	1
Pentachlorobiphenyls	ND		ng/cart	10.0	--	1
Hexachlorobiphenyls	ND		ng/cart	10.0	--	1
Heptachlorobiphenyls	ND		ng/cart	10.0	--	1
Octachlorobiphenyls	ND		ng/cart	10.0	--	1
Nonachlorobiphenyls	ND		ng/cart	10.0	--	1
Decachlorobiphenyl	ND		ng/cart	10.0	--	1
Total Homologs	ND		ng/cart	10.0	--	1

Surrogate	% Recovery	Qualifier	Acceptance Criteria
Cl3-BZ#19-C13	57		50-125
Cl8-BZ#202-C13	56		50-125

Project Name: DOHERTY HS
Project Number: Not Specified

Lab Number: L1713007
Report Date: 05/10/17

SAMPLE RESULTS

Lab ID: L1713007-08
Client ID: DOH42417106-08
Sample Location: WORCESTER MA

Matrix: Air Media
Analytical Method: 105,8270D-SIM/680(M)
Analytical Date: 05/05/17 18:52
Analyst: MJS

Volume of Air: --

Date Collected: 04/24/17 21:58
Date Received: 04/25/17
Field Prep: Not Specified
Extraction Method: EPA 3540C
Extraction Date: 04/28/17 12:51

Parameter	Result	Qualifier	Units	RL	MDL	Dilution Factor
PCB Homologs by GC/MS-SIM (LowVol) - Mansfield Lab						
Monochlorobiphenyls	ND		ng/cart	10.0	--	1
Dichlorobiphenyls	ND		ng/cart	10.0	--	1
Trichlorobiphenyls	ND		ng/cart	10.0	--	1
Tetrachlorobiphenyls	ND		ng/cart	10.0	--	1
Pentachlorobiphenyls	ND		ng/cart	10.0	--	1
Hexachlorobiphenyls	ND		ng/cart	10.0	--	1
Heptachlorobiphenyls	ND		ng/cart	10.0	--	1
Octachlorobiphenyls	ND		ng/cart	10.0	--	1
Nonachlorobiphenyls	ND		ng/cart	10.0	--	1
Decachlorobiphenyl	ND		ng/cart	10.0	--	1
Total Homologs	ND		ng/cart	10.0	--	1

Surrogate	% Recovery	Qualifier	Acceptance Criteria
Cl3-BZ#19-C13	85		50-125
Cl8-BZ#202-C13	89		50-125

Project Name: DOHERTY HS
Project Number: Not Specified

Lab Number: L1713007
Report Date: 05/10/17

SAMPLE RESULTS

Lab ID: L1713007-09
Client ID: DOH42417MO-09
Sample Location: WORCESTER, MA

Matrix: Air Media
Analytical Method: 105,8270D-SIM/680(M)
Analytical Date: 05/05/17 20:06
Analyst: MJS

Volume of Air: --

Date Collected: 04/24/17 21:45
Date Received: 04/25/17
Field Prep: Not Specified
Extraction Method: EPA 3540C
Extraction Date: 04/28/17 12:51

Parameter	Result	Qualifier	Units	RL	MDL	Dilution Factor
PCB Homologs by GC/MS-SIM (LowVol) - Mansfield Lab						
Monochlorobiphenyls	ND		ng/cart	10.0	--	1
Dichlorobiphenyls	ND		ng/cart	10.0	--	1
Trichlorobiphenyls	25.5		ng/cart	10.0	--	1
Tetrachlorobiphenyls	27.7		ng/cart	10.0	--	1
Pentachlorobiphenyls	28.3		ng/cart	10.0	--	1
Hexachlorobiphenyls	ND		ng/cart	10.0	--	1
Heptachlorobiphenyls	ND		ng/cart	10.0	--	1
Octachlorobiphenyls	ND		ng/cart	10.0	--	1
Nonachlorobiphenyls	ND		ng/cart	10.0	--	1
Decachlorobiphenyl	ND		ng/cart	10.0	--	1
Total Homologs	81.5		ng/cart	10.0	--	1

Surrogate	% Recovery	Qualifier	Acceptance Criteria
Cl3-BZ#19-C13	87		50-125
Cl8-BZ#202-C13	86		50-125

Project Name: DOHERTY HS
Project Number: Not Specified

Lab Number: L1713007
Report Date: 05/10/17

SAMPLE RESULTS

Lab ID: L1713007-10
Client ID: DOH42417MOR-10
Sample Location: WORCESTER, MA

Matrix: Air Media
Analytical Method: 105,8270D-SIM/680(M)
Analytical Date: 05/05/17 21:20
Analyst: MJS

Volume of Air: --

Date Collected: 04/24/17 21:49
Date Received: 04/25/17
Field Prep: Not Specified
Extraction Method: EPA 3540C
Extraction Date: 04/28/17 12:51

Parameter	Result	Qualifier	Units	RL	MDL	Dilution Factor
PCB Homologs by GC/MS-SIM (LowVol) - Mansfield Lab						
Monochlorobiphenyls	ND		ng/cart	10.0	--	1
Dichlorobiphenyls	ND		ng/cart	10.0	--	1
Trichlorobiphenyls	16.2		ng/cart	10.0	--	1
Tetrachlorobiphenyls	23.2		ng/cart	10.0	--	1
Pentachlorobiphenyls	25.8		ng/cart	10.0	--	1
Hexachlorobiphenyls	ND		ng/cart	10.0	--	1
Heptachlorobiphenyls	ND		ng/cart	10.0	--	1
Octachlorobiphenyls	ND		ng/cart	10.0	--	1
Nonachlorobiphenyls	ND		ng/cart	10.0	--	1
Decachlorobiphenyl	ND		ng/cart	10.0	--	1
Total Homologs	65.2		ng/cart	10.0	--	1

Surrogate	% Recovery	Qualifier	Acceptance Criteria
Cl3-BZ#19-C13	82		50-125
Cl8-BZ#202-C13	82		50-125

Project Name: DOHERTY HS
Project Number: Not Specified

Lab Number: L1713007
Report Date: 05/10/17

SAMPLE RESULTS

Lab ID: L1713007-11
Client ID: DOH42417AP-11
Sample Location: WORCESTER, MA

Matrix: Air Media
Analytical Method: 105,8270D-SIM/680(M)
Analytical Date: 05/09/17 15:51
Analyst: MJS

Volume of Air: --

Date Collected: 04/24/17 21:53
Date Received: 04/25/17
Field Prep: Not Specified
Extraction Method: EPA 3540C
Extraction Date: 04/28/17 12:51

Parameter	Result	Qualifier	Units	RL	MDL	Dilution Factor
PCB Homologs by GC/MS-SIM (LowVol) - Mansfield Lab						
Monochlorobiphenyls	ND		ng/cart	10.0	--	1
Dichlorobiphenyls	ND		ng/cart	10.0	--	1
Trichlorobiphenyls	ND		ng/cart	10.0	--	1
Tetrachlorobiphenyls	32.6		ng/cart	10.0	--	1
Pentachlorobiphenyls	49.4		ng/cart	10.0	--	1
Hexachlorobiphenyls	27.5		ng/cart	10.0	--	1
Heptachlorobiphenyls	13.9		ng/cart	10.0	--	1
Octachlorobiphenyls	ND		ng/cart	10.0	--	1
Nonachlorobiphenyls	ND		ng/cart	10.0	--	1
Decachlorobiphenyl	ND		ng/cart	10.0	--	1
Total Homologs	123		ng/cart	10.0	--	1

Surrogate	% Recovery	Qualifier	Acceptance Criteria
Cl3-BZ#19-C13	84		50-125
Cl8-BZ#202-C13	86		50-125

Project Name: DOHERTY HS
Project Number: Not Specified

Lab Number: L1713007
Report Date: 05/10/17

SAMPLE RESULTS

Lab ID: L1713007-12
Client ID: DOH42417OS-12
Sample Location: WORCESTER, MA

Matrix: Air Media
Analytical Method: 105,8270D-SIM/680(M)
Analytical Date: 05/09/17 17:05
Analyst: MJS

Volume of Air: --

Date Collected: 04/24/17 21:39
Date Received: 04/25/17
Field Prep: Not Specified
Extraction Method: EPA 3540C
Extraction Date: 04/28/17 12:51

Parameter	Result	Qualifier	Units	RL	MDL	Dilution Factor
PCB Homologs by GC/MS-SIM (LowVol) - Mansfield Lab						
Monochlorobiphenyls	ND		ng/cart	10.0	--	1
Dichlorobiphenyls	ND		ng/cart	10.0	--	1
Trichlorobiphenyls	ND		ng/cart	10.0	--	1
Tetrachlorobiphenyls	ND		ng/cart	10.0	--	1
Pentachlorobiphenyls	ND		ng/cart	10.0	--	1
Hexachlorobiphenyls	ND		ng/cart	10.0	--	1
Heptachlorobiphenyls	ND		ng/cart	10.0	--	1
Octachlorobiphenyls	ND		ng/cart	10.0	--	1
Nonachlorobiphenyls	ND		ng/cart	10.0	--	1
Decachlorobiphenyl	ND		ng/cart	10.0	--	1
Total Homologs	ND		ng/cart	10.0	--	1

Surrogate	% Recovery	Qualifier	Acceptance Criteria
Cl3-BZ#19-C13	85		50-125
Cl8-BZ#202-C13	89		50-125

Project Name: DOHERTY HS
Project Number: Not Specified

Lab Number: L1713007
Report Date: 05/10/17

SAMPLE RESULTS

Lab ID: L1713007-13
Client ID: DOH42417FB-13
Sample Location: WORCESTER, MA

Matrix: Air Media
Analytical Method: 105,8270D-SIM/680(M)
Analytical Date: 05/09/17 18:19
Analyst: MJS

Volume of Air: --

Date Collected: 04/24/17 00:00
Date Received: 04/25/17
Field Prep: Not Specified
Extraction Method: EPA 3540C
Extraction Date: 04/28/17 12:51

Parameter	Result	Qualifier	Units	RL	MDL	Dilution Factor
PCB Homologs by GC/MS-SIM (LowVol) - Mansfield Lab						
Monochlorobiphenyls	ND		ng/cart	10.0	--	1
Dichlorobiphenyls	ND		ng/cart	10.0	--	1
Trichlorobiphenyls	ND		ng/cart	10.0	--	1
Tetrachlorobiphenyls	ND		ng/cart	10.0	--	1
Pentachlorobiphenyls	ND		ng/cart	10.0	--	1
Hexachlorobiphenyls	ND		ng/cart	10.0	--	1
Heptachlorobiphenyls	ND		ng/cart	10.0	--	1
Octachlorobiphenyls	ND		ng/cart	10.0	--	1
Nonachlorobiphenyls	ND		ng/cart	10.0	--	1
Decachlorobiphenyl	ND		ng/cart	10.0	--	1
Total Homologs	ND		ng/cart	10.0	--	1

Surrogate	% Recovery	Qualifier	Acceptance Criteria
Cl3-BZ#19-C13	84		50-125
Cl8-BZ#202-C13	87		50-125

Project Name: DOHERTY HS
Project Number: Not Specified

Lab Number: L1713007
Report Date: 05/10/17

Method Blank Analysis
Batch Quality Control

Analytical Method: 105,8270D-SIM/680(M)
Analytical Date: 05/05/17 07:45
Analyst: MJS

Extraction Method: EPA 3540C
Extraction Date: 04/28/17 12:51

Parameter	Result	Qualifier	Units	RL	MDL
PCB Homologs by GC/MS-SIM (LowVol) - Mansfield Lab for sample(s): 01-13 Batch: WG998478-1					
Monochlorobiphenyls	ND		ng/cart	10.0	--
Dichlorobiphenyls	ND		ng/cart	10.0	--
Trichlorobiphenyls	ND		ng/cart	10.0	--
Tetrachlorobiphenyls	ND		ng/cart	10.0	--
Pentachlorobiphenyls	ND		ng/cart	10.0	--
Hexachlorobiphenyls	ND		ng/cart	10.0	--
Heptachlorobiphenyls	ND		ng/cart	10.0	--
Octachlorobiphenyls	ND		ng/cart	10.0	--
Nonachlorobiphenyls	ND		ng/cart	10.0	--
Decachlorobiphenyl	ND		ng/cart	10.0	--
Total Homologs	ND		ng/cart	10.0	--

Surrogate	%Recovery	Qualifier	Acceptance Criteria
Cl3-BZ#19-C13	68		50-125
Cl8-BZ#202-C13	68		50-125

Lab Control Sample Analysis
Batch Quality Control

Project Name: DOHERTY HS
Project Number: Not Specified

Lab Number: L1713007
Report Date: 05/10/17

Parameter	LCS %Recovery	Qual	LCSD %Recovery	Qual	%Recovery Limits	RPD	Qual	RPD Limits
PCB Homologs by GC/MS-SIM (LowVol) - Mansfield Lab Associated sample(s): 01-13 Batch: WG998478-2								
Cl1-BZ#1	66		-		40-140	-		30
CL1-BZ#3	69		-		40-140	-		30
Cl2-BZ#4/#10	67		-		40-140	-		30
Cl2-BZ#8	67		-		40-140	-		30
Cl3-BZ#19	67		-		40-140	-		30
Cl3-BZ#18	65		-		40-140	-		30
Cl2-BZ#15	73		-		40-140	-		30
Cl4-BZ#54	70		-		40-140	-		30
Cl3-BZ#29	67		-		40-140	-		30
Cl4-BZ#50	71		-		40-140	-		30
Cl3-BZ#-31	67		-		40-140	-		30
Cl3-BZ#28	68		-		40-140	-		30
Cl4-BZ#45	69		-		40-140	-		30
Cl4-BZ#52	69		-		40-140	-		30
Cl4-BZ#49	71		-		40-140	-		30
Cl5-BZ#104	77		-		40-140	-		30
Cl4-BZ#47	73		-		40-140	-		30
Cl4-BZ#44	70		-		40-140	-		30
Cl3-BZ#37	69		-		40-140	-		30
Cl5-BZ#121/#95/#88	79		-		40-140	-		30
Cl4-BZ#74	72		-		40-140	-		30
Cl6-BZ#155	84		-		40-140	-		30
Cl4-BZ#70	72		-		40-140	-		30

Lab Control Sample Analysis
Batch Quality Control

Project Name: DOHERTY HS
Project Number: Not Specified

Lab Number: L1713007
Report Date: 05/10/17

PCB Homologs by GC/MS-SIM (LowVol) - Mansfield Lab Associated sample(s): 01-13 Batch: WG998478-2

Parameter	LCS %Recovery	Qual	LCSD %Recovery	Qual	%Recovery Limits	RPD	Qual	RPD Limits
Cl4-BZ#66	70		-		40-140	-		30
Cl5-BZ#101/#90	78		-		40-140	-		30
Cl4-BZ#56	69		-		40-140	-		30
Cl5-BZ#99	79		-		40-140	-		30
Cl5-BZ#87/#111	78		-		40-140	-		30
Cl6-BZ#154	78		-		40-140	-		30
Cl5-BZ#110	77		-		40-140	-		30
Cl4-BZ#81	66		-		40-140	-		30
Cl6-BZ#151	65		-		40-140	-		30
Cl6-BZ#147/#149	63		-		40-140	-		30
Cl4-BZ#77	48		-		40-140	-		30
Cl5-BZ#107/#123	62		-		40-140	-		30
Cl7-BZ#188	67		-		40-140	-		30
Cl5-BZ#118	65		-		40-140	-		30
Cl6-BZ#146	66		-		40-140	-		30
Cl5-BZ#114	62		-		40-140	-		30
Cl6-BZ#153	62		-		40-140	-		30
Cl5-BZ#105	61		-		40-140	-		30
Cl6-BZ#138	62		-		40-140	-		30
Cl6-BZ#129/#158	70		-		40-140	-		30
Cl7-BZ#187	68		-		40-140	-		30
Cl7-BZ#183	66		-		40-140	-		30
Cl5-BZ#126	56		-		40-140	-		30

Lab Control Sample Analysis
Batch Quality Control

Project Name: DOHERTY HS
Project Number: Not Specified

Lab Number: L1713007
Report Date: 05/10/17

Parameter	LCS %Recovery	Qual	LCSD %Recovery	Qual	%Recovery Limits	RPD	Qual	RPD Limits
PCB Homologs by GC/MS-SIM (LowVol) - Mansfield Lab Associated sample(s): 01-13 Batch: WG998478-2								
Cl7-BZ#174	66		-		40-140	-		30
Cl6-BZ#128	69		-		40-140	-		30
Cl6-BZ#167	64		-		40-140	-		30
Cl8-BZ#202	71		-		40-140	-		30
Cl7-BZ#177	70		-		40-140	-		30
Cl8-BZ#204/#200-CAL	71		-		40-140	-		30
Cl6-BZ#156	62		-		40-140	-		30
Cl6-BZ#157	69		-		40-140	-		30
Cl7-BZ#180	77		-		40-140	-		30
Cl8-BZ#201	66		-		40-140	-		30
Cl7-BZ#170	70		-		40-140	-		30
Cl6-BZ#169	62		-		40-140	-		30
Cl9-BZ#208	75		-		40-140	-		30
Cl7-BZ#189	72		-		40-140	-		30
Cl8-BZ#195	73		-		40-140	-		30
Cl8-BZ#194	70		-		40-140	-		30
Cl8-BZ#205	70		-		40-140	-		30
Cl9-BZ#206	66		-		40-140	-		30
Cl10-BZ#209	76		-		40-140	-		30

Lab Control Sample Analysis

Batch Quality Control

Project Name: DOHERTY HS

Project Number: Not Specified

Lab Number: L1713007

Report Date: 05/10/17

Parameter	LCS %Recovery	Qual	LCSD %Recovery	Qual	%Recovery Limits	RPD	Qual	RPD Limits
PCB Homologs by GC/MS-SIM (LowVol) - Mansfield Lab Associated sample(s): 01-13 Batch: WG998478-2								

Surrogate	LCS %Recovery	Qual	LCSD %Recovery	Qual	Acceptance Criteria
Cl3-BZ#19-C13	66				50-125
Cl8-BZ#202-C13	71				50-125

Project Name: DOHERTY HS
Project Number: Not Specified

Lab Number: L1713007
Report Date: 05/10/17

Sample Receipt and Container Information

Were project specific reporting limits specified? YES

Cooler Information	Custody Seal
Cooler	
A	Absent
B	Absent

Container Information

Container ID	Container Type	Cooler	pH	Temp deg C	Pres	Seal	Analysis(*)
L1713007-01A	PUF Air Cartridge - High or Low	A	N/A	3.0	Y	Absent	A2-PCBHOMS-8270SIML(7)
L1713007-02A	PUF Air Cartridge - High or Low	A	N/A	3.0	Y	Absent	A2-PCBHOMS-8270SIML(7)
L1713007-03A	PUF Air Cartridge - High or Low	A	N/A	3.0	Y	Absent	A2-PCBHOMS-8270SIML(7)
L1713007-04A	PUF Air Cartridge - High or Low	A	N/A	3.0	Y	Absent	A2-PCBHOMS-8270SIML(7)
L1713007-05A	PUF Air Cartridge - High or Low	A	N/A	3.0	Y	Absent	A2-PCBHOMS-8270SIML(7)
L1713007-06A	PUF Air Cartridge - High or Low	A	N/A	3.0	Y	Absent	A2-PCBHOMS-8270SIML(7)
L1713007-07A	PUF Air Cartridge - High or Low	A	N/A	3.0	Y	Absent	A2-PCBHOMS-8270SIML(7)
L1713007-08A	PUF Air Cartridge - High or Low	A	N/A	3.0	Y	Absent	A2-PCBHOMS-8270SIML(7)
L1713007-09A	PUF Air Cartridge - High or Low	B	N/A	3.6	Y	Absent	A2-PCBHOMS-8270SIML(7)
L1713007-10A	PUF Air Cartridge - High or Low	B	N/A	3.6	Y	Absent	A2-PCBHOMS-8270SIML(7)
L1713007-11A	PUF Air Cartridge - High or Low	B	N/A	3.6	Y	Absent	A2-PCBHOMS-8270SIML(7)
L1713007-12A	PUF Air Cartridge - High or Low	B	N/A	3.6	Y	Absent	A2-PCBHOMS-8270SIML(7)
L1713007-13A	PUF Air Cartridge - High or Low	B	N/A	3.6	Y	Absent	A2-PCBHOMS-8270SIML(7)

*Values in parentheses indicate holding time in days

Project Name:	DOHERTY HS	**Lab Number:**	L1713007
Project Number:	Not Specified	**Report Date:**	05/10/17

GLOSSARY

Acronyms

EDL	- Estimated Detection Limit: This value represents the level to which target analyte concentrations are reported as estimated values, when those target analyte concentrations are quantified below the reporting limit (RL). The EDL includes any adjustments from dilutions, concentrations or moisture content, where applicable. The use of EDLs is specific to the analysis of PAHs using Solid-Phase Microextraction (SPME).
EPA	- Environmental Protection Agency.
LCS	- Laboratory Control Sample: A sample matrix, free from the analytes of interest, spiked with verified known amounts of analytes or a material containing known and verified amounts of analytes.
LCSD	- Laboratory Control Sample Duplicate: Refer to LCS.
LFB	- Laboratory Fortified Blank: A sample matrix, free from the analytes of interest, spiked with verified known amounts of analytes or a material containing known and verified amounts of analytes.
MDL	- Method Detection Limit: This value represents the level to which target analyte concentrations are reported as estimated values, when those target analyte concentrations are quantified below the reporting limit (RL). The MDL includes any adjustments from dilutions, concentrations or moisture content, where applicable.
MS	- Matrix Spike Sample: A sample prepared by adding a known mass of target analyte to a specified amount of matrix sample for which an independent estimate of target analyte concentration is available.
MSD	- Matrix Spike Sample Duplicate: Refer to MS.
NA	- Not Applicable.
NC	- Not Calculated: Term is utilized when one or more of the results utilized in the calculation are non-detect at the parameter's reporting unit.
NDPA/DPA	- N-Nitrosodiphenylamine/Diphenylamine.
NI	- Not Ignitable.
NP	- Non-Plastic: Term is utilized for the analysis of Atterberg Limits in soil.
RL	- Reporting Limit: The value at which an instrument can accurately measure an analyte at a specific concentration. The RL includes any adjustments from dilutions, concentrations or moisture content, where applicable.
RPD	- Relative Percent Difference: The results from matrix and/or matrix spike duplicates are primarily designed to assess the precision of analytical results in a given matrix and are expressed as relative percent difference (RPD). Values which are less than five times the reporting limit for any individual parameter are evaluated by utilizing the absolute difference between the values; although the RPD value will be provided in the report.
SRM	- Standard Reference Material: A reference sample of a known or certified value that is of the same or similar matrix as the associated field samples.
STLP	- Semi-dynamic Tank Leaching Procedure per EPA Method 1315.
TIC	- Tentatively Identified Compound: A compound that has been identified to be present and is not part of the target compound list (TCL) for the method and/or program. All TICs are qualitatively identified and reported as estimated concentrations.

Footnotes

1	- The reference for this analyte should be considered modified since this analyte is absent from the target analyte list of the original method.

Terms

Total: With respect to Organic analyses, a 'Total' result is defined as the summation of results for individual isomers or Aroclors. If a 'Total' result is requested, the results of its individual components will also be reported. This is applicable to 'Total' results for methods 8260, 8081 and 8082.

Analytical Method: Both the document from which the method originates and the analytical reference method. (Example: EPA 8260B is shown as 1,8260B.) The codes for the reference method documents are provided in the References section of the Addendum.

Data Qualifiers

A	- Spectra identified as "Aldol Condensation Product".
B	- The analyte was detected above the reporting limit in the associated method blank. Flag only applies to associated field samples that have detectable concentrations of the analyte at less than ten times (10x) the concentration found in the blank. For MCP-related projects, flag only applies to associated field samples that have detectable concentrations of the analyte at less than ten times (10x) the concentration found in the blank. For DOD-related projects, flag only applies to associated field samples that have detectable concentrations of the analyte at less than ten times (10x) the concentration found in the blank AND the analyte was detected above one-half the reporting limit (or above the reporting limit for common lab contaminants) in the associated method blank. For NJ-Air-related projects, flag only applies to associated field samples that have detectable concentrations of the analyte above the reporting limit. For NJ-related projects (excluding Air), flag only applies to associated field samples that have detectable concentrations of the analyte, which was detected above the reporting limit in the associated method blank or above five times the

Project Name: DOHERTY HS **Lab Number:** L1713007

Project Number: Not Specified **Report Date:** 05/10/17

Data Qualifiers

reporting limit for common lab contaminants (Phthalates, Acetone, Methylene Chloride, 2-Butanone).

C - Co-elution: The target analyte co-elutes with a known lab standard (i.e. surrogate, internal standards, etc.) for co-extracted analyses.

D - Concentration of analyte was quantified from diluted analysis. Flag only applies to field samples that have detectable concentrations of the analyte.

E - Concentration of analyte exceeds the range of the calibration curve and/or linear range of the instrument.

G - The concentration may be biased high due to matrix interferences (i.e, co-elution) with non-target compound(s). The result should be considered estimated.

H - The analysis of pH was performed beyond the regulatory-required holding time of 15 minutes from the time of sample collection.

I - The lower value for the two columns has been reported due to obvious interference.

M - Reporting Limit (RL) exceeds the MCP CAM Reporting Limit for this analyte.

NJ - Presumptive evidence of compound. This represents an estimated concentration for Tentatively Identified Compounds (TICs), where the identification is based on a mass spectral library search.

P - The RPD between the results for the two columns exceeds the method-specified criteria.

Q - The quality control sample exceeds the associated acceptance criteria. For DOD-related projects, LCS and/or Continuing Calibration Standard exceedences are also qualified on all associated sample results. Note: This flag is not applicable for matrix spike recoveries when the sample concentration is greater than 4x the spike added or for batch duplicate RPD when the sample concentrations are less than 5x the RL. (Metals only.)

R - Analytical results are from sample re-analysis.

RE - Analytical results are from sample re-extraction.

S - Analytical results are from modified screening analysis.

J - Estimated value. This represents an estimated concentration for Tentatively Identified Compounds (TICs).

ND - Not detected at the reporting limit (RL) for the sample.

Report Format: Data Usability Report

Project Name: DOHERTY HS **Lab Number:** L1713007
Project Number: Not Specified **Report Date:** 05/10/17

REFERENCES

105 Test Methods for Evaluating Solid Waste: Physical/Chemical Methods. EPA SW-846. Third Edition. Updates I - IIIA, 1997 in conjunction with NOAA Technical Memorandum NMFS-NWFSC-59: Extraction, Cleanup and GC/MS Analysis of Sediments and Tissues for Organic Contaminants, March 2004 and the Determination of Pesticides and PCBs in Water and Oil/Sediment by GC/MS: Method 680, EPA 01A0005295, November 1985.

LIMITATION OF LIABILITIES

Alpha Analytical performs services with reasonable care and diligence normal to the analytical testing laboratory industry. In the event of an error, the sole and exclusive responsibility of Alpha Analytical shall be to re-perform the work at it's own expense. In no event shall Alpha Analytical be held liable for any incidental, consequential or special damages, including but not limited to, damages in any way connected with the use of, interpretation of, information or analysis provided by Alpha Analytical.

We strongly urge our clients to comply with EPA protocol regarding sample volume, preservation, cooling, containers, sampling procedures, holding time and splitting of samples in the field.

Certification Information

The following analytes are not included in our Primary NELAP Scope of Accreditation:

Westborough Facility
EPA 624: m/p-xylene, o-xylene
EPA 8260C: NPW: 1,2,4,5-Tetramethylbenzene; 4-Ethyltoluene, Azobenzene; SCM: Iodomethane (methyl iodide), Methyl methacrylate, 1,2,4,5-Tetramethylbenzene; 4-Ethyltoluene.
EPA 8270D: NPW: Dimethylnaphthalene,1,4-Diphenylhydrazine; SCM: Dimethylnaphthalene,1,4-Diphenylhydrazine.
EPA 300: DW: Bromide
EPA 6860: NPW and SCM: Perchlorate
EPA 9010: NPW and SCM: Amenable Cyanide Distillation
EPA 9012B: NPW: Total Cyanide
EPA 9050A: NPW: Specific Conductance
SM3500: NPW: Ferrous Iron
SM4500: NPW: Amenable Cyanide, Dissolved Oxygen; SCM: Total Phosphorus, TKN, NO2, NO3.
SM5310C: DW: Dissolved Organic Carbon

Mansfield Facility
SM 2540D: TSS
EPA 3005A NPW
EPA 8082A: NPW: PCB: 1, 5, 31, 87,101, 110, 141, 151, 153, 180, 183, 187.
EPA TO-15: Halothane, 2,4,4-Trimethyl-2-pentene, 2,4,4-Trimethyl-1-pentene, Thiophene, 2-Methylthiophene, 3-Methylthiophene, 2-Ethylthiophene, 1,2,3-Trimethylbenzene, Indan, Indene, 1,2,4,5-Tetramethylbenzene, Benzothiophene, 1-Methylnaphthalene.
Biological Tissue Matrix: EPA 3050B

The following analytes are included in our Massachusetts DEP Scope of Accreditation

Westborough Facility:

Drinking Water
EPA 300.0: Nitrate-N, Fluoride, Sulfate; **EPA 353.2**: Nitrate-N, Nitrite-N; **SM4500NO3-F**: Nitrate-N, Nitrite-N; **SM4500F-C, SM4500CN-CE, EPA 180.1, SM2130B, SM4500Cl-D, SM2320B, SM2540C, SM4500H-B**
EPA 332: Perchlorate; **EPA 524.2:** THMs and VOCs; **EPA 504.1:** EDB, DBCP.
Microbiology: **SM9215B; SM9223-P/A, SM9223B-Colilert-QT,SM9222D**.

Non-Potable Water
SM4500H,B, EPA 120.1, SM2510B, SM2540C, SM2320B, SM4500CL-E, SM4500F-BC, SM4500NH3-BH, **EPA 350.1**: Ammonia-N, **LACHAT 10-107-06-1-B**: Ammonia-N, **SM4500NO3-F, EPA 353.2**: Nitrate-N**, EPA 351.1, SM4500P-E, SM4500P-B, E, SM4500SO4-E, SM5220D, EPA 410.4, SM5210B, SM5310C, SM4500CL-D, EPA 1664, EPA 420.1, SM4500-CN-CE, SM2540D.**
EPA 624: Volatile Halocarbons & Aromatics,
EPA 608: Chlordane, Toxaphene, Aldrin, alpha-BHC, beta-BHC, gamma-BHC, delta-BHC, Dieldrin, DDD, DDE, DDT, Endosulfan I, Endosulfan II, Endosulfan sulfate, Endrin, Endrin Aldehyde, Heptachlor, Heptachlor Epoxide, PCBs
EPA 625: SVOC (Acid/Base/Neutral Extractables), **EPA 600/4-81-045**: PCB-Oil.
Microbiology: **SM9223B-Colilert-QT; Enterolert-QT, SM9221E.**

Mansfield Facility:

Drinking Water
EPA 200.7: Ba, Be, Cd, Cr, Cu, Ni, Na, Ca. **EPA 200.8:** Sb, As, Ba, Be, Cd, Cr, Cu, Pb, Ni, Se, TL. **EPA 245.1** Hg.

Non-Potable Water
EPA 200.7: Al, Sb, As, Be, Cd, Ca, Cr, Co, Cu, Fe, Pb, Mg, Mn, Mo, Ni, K, Se, Ag, Na, Sr, TL, Ti, V, Zn.
EPA 200.8: Al, Sb, As, Be, Cd, Cr, Cu, Pb, Mn, Ni, Se, Ag, TL, Zn.
EPA 245.1 Hg.
SM2340B

For a complete listing of analytes and methods, please contact your Alpha Project Manager.

AIR ANALYSIS - SORBENT MEDIA
CHAIN OF CUSTODY

Page ___ of ___

Date Rec'd in Lab: 4/26/17

ALPHA Job #: L1713007

Westborough, MA
TEL: 508-898-9220
FAX: 508-822-3288

Mansfield, MA
TEL: 508-822-9300
508-822-3288

Client Information

Client: OTO
Address: 293 BRIDGE ST SUITE 500
SPRINGFIELD, MA 01103
~~Phone~~: PHONE 413-788-6222
~~Fax~~:
Email: OKUN@OTO-ENV.COM

Project Information

Project Name: DOHERTY HS
Project Location: WORCESTER MA
Project #
(Use Project name as Project #) ☑
Project Manager: JIM OKUN
ALPHA Quote #: 2545

Turn-Around Time

Standard ☒ Due Date:
Rush (only if pre approved) ☐ Time:

Report Information - Data Deliverables

☐ FAX
☐ ADEx
Criteria Checker:
Other Formats:
☒ EMAIL
☐ Add'l Deliverables

Report to: (if different than Project Manager)

Billing Information

☒ Same as Client Info
PO #

Regulatory Requirements/Report Limits

State/Fed	Program	Criteria

These samples have been previously analyzed by Alpha ☐

Other Project Specific Requirements/ Comments/Detection Limits

For PCBs, selection is REQUIRED:
☐ Congeners
☒ Homologs
☐ Aroclors (Low Vol only)

ANALYSIS

NOTE: For metals, please specify elements of interest and media type.
☐ PM-10
☐ TSP
☐ MCE

All Columns Below Must Be Filled Out

ALPHA Lab ID (Lab Use Only)	Sample ID	Collection Date	Start Time	End Time	Flow Rate (L/min)	Total Volume (L)	Sample Matrix*	Sampler's Initials	Media ID# (1)	TO-13A	PCBs (High Vol)	PCBs (Low Vol)	TO-11A	Hg via NIOSH 6009 Mod.	Metals	TO-17		Sample Comments (i.e. PID)
L1713007.01	DOH4241720401	4-24-17	1515	2101	2.5 2.5	865	AA	PJS				✓						
02	DOH4241720-02	↓	1526	2107	2.46 2.5	845.7	AA	PJS				✓						
03	DOH4241713B-03		1532	2113	2.55 2.57	872.9	AA	PJS				✓						
04	DOH4241710-04		1541	2117	2.5 2.5	840	AA	PJS				✓						
05	DOH4241706-05		1547	2130	2.5 2.5	857.5	AA	PJS				✓						
06	DOH4241723-06		1602	2123	2.5 2.55	812.1	AA	PJS				✓						
07	DOH4241720AF-07		1610	2202	2.4 2.5	862.4	AA	PJS				✓						
08	DOH4241706-08		1617	2158	2.6 2.6	886.6	AA	PJS				✓						
09	DOH4241710-09		1624	2145	2.5 2.5	802.5	AA	PJS				✓						
10	DOH4241710R-10	↓	1630	2149	2.2 2.5	797.5	AA	PJS				✓						
									Media Type	P	P	P	D	T	F	T		

*** SAMPLE MATRIX CODES**
AA = Ambient Air (Indoor/Outdoor)
SV = Soil Vapor/Landfill Gas/SVE
Other = Please Specify

(1) Required for PUF cartridges, PM-10 and TSP filters and TO-17 sorbent tubes.

Media Code
D = DNPH Cartridge
F = Filter
P = PUF Cartridge
T = Sorbent Tube
O = Other

Relinquished By:	Date/Time	Received By:	Date/Time
PAT SCHAFFNER	4-25-17 11AM	[illegible]	4/25/17 1105
[illegible]	4/25/17 1715	[illegible]	4/25/17 1715
[illegible]	4-25-17 21:50	[illegible]	4/25/17 21:50

Please print clearly, legibly and completely. Samples can not be logged in and turnaround time clock will not start until any ambiguities are resolved. BY EXECUTING THIS COC, THE CLIENT HAS READ AND AGREES TO BE BOUND BY ALPHA'S TERMS & CONDITIONS. (See reverse side.)

Form No: 101-13 (rev 01-OCT-2013)

AIR ANALYSIS - SORBENT MEDIA
CHAIN OF CUSTODY

ALPHA ANALYTICAL

Page ___ of ___

Date Rec'd in Lab: 4/26/17

ALPHA Job #: L17 13007

Westborough, MA TEL: 508-898-9220 FAX: 508-822-3288

Mansfield, MA TEL: 508-822-9300 508-822-3288

Client Information

Client: OTO

Address: 293 BRIDGE ST SUITE 500

Phone: SPRINGFIELD MA

Fax: PHONE 413-788-6222

Email:

Project Information

Project Name: DOHERTY HS

Project Location: WORCESTER MA

Project #

(Use Project name as Project #) ☑

Project Manager: JIM OKUN

ALPHA Quote #: 25415

Turn-Around Time

Standard ☒ Due Date:

Rush (only if pre approved) ☐ Time:

Report Information - Data Deliverables

☐ FAX

☐ ADEx

Criteria Checker:

Other Formats:

☒ EMAIL

☐ Add'l Deliverables

Report to: (if different than Project Manager)

Billing Information

☒ Same as Client Info

PO #

Regulatory Requirements/Report Limits

State/Fed	Program	Criteria

These samples have been previously analyzed by Alpha ☐

Other Project Specific Requirements/ Comments/Detection Limits

For PCBs, selection is REQUIRED:

☐ Congeners

☒ Homologs

☐ Aroclors (Low Vol only)

ANALYSIS

NOTE: For metals, please specify elements of interest and media type.

☐ PM-10

☐ TSP

☐ MCE

All Columns Below Must Be Filled Out

ALPHA Lab ID (Lab Use Only)	Sample ID	Collection Date	Start Time	End Time	Flow Rate (L/min)	Total Volume (L)	Sample Matrix*	Sampler's Initials	Media ID# (1)	TO-13A	PCBs (High Vol)	PCBs (Low Vol)	TO-11A	Hg via NIOSH 6009 Mod.	Metals	TO-17		Sample Comments (i.e. PID)
13007.11	DOH42417AP-11	4-24-17	1638	2153	2.5 ~~2.5~~	787.5	AA	PSS				✓						
.12	DOH42417OS-12	↓	1645	2139	~~2.0~~ ~~2.7~~	779.1	↓	PSS				✓						
	DOH42417FB-13	↓	—	—	—	—	↓	PSS				✓						
												✓						
												✓						

* SAMPLE MATRIX CODES	AA = Ambient Air (Indoor/Outdoor) SV = Soil Vapor/Landfill Gas/SVE Other = Please Specify	(1) Required for PUF cartridges, PM-10 and TSP filters and TO-17 sorbent tubes.

Media Type	P	P	P	D	T	F	T	

Media Code
D = DNPH Cartridge
F = Filter
P = PUF Cartridge
T = Sorbent Tube
O = Other

Relinquished By:	Date/Time	Received By:	Date/Time
PAT SCHAFFNER	4-25-17 11AM	[illegible]	4/25/17 1105
[illegible]	4/25/17 1P	[illegible]	4/25/17 17P
[illegible]	4-25-17 21:50	[illegible]	4/25/17 21:50

Please print clearly, legibly and completely. Samples can not be logged in and turnaround time clock will not start until any ambiguities are resolved. BY EXECUTING THIS COC, THE CLIENT HAS READ AND AGREES TO BE BOUND BY ALPHA'S TERMS & CONDITIONS. (See reverse side.)

Form No: 101-13 (rev 01-OCT-2013)

EPA/625/R-96/010b

Compendium of Methods for the Determination of Toxic Organic Compounds in Ambient Air

Second Edition

Compendium Method TO-10A

Determination Of Pesticides And Polychlorinated Biphenyls In Ambient Air Using Low Volume Polyurethane Foam (PUF) Sampling Followed By Gas Chromatographic/Multi-Detector Detection (GC/MD)

Center for Environmental Research Information
Office of Research and Development
U.S. Environmental Protection Agency
Cincinnati, OH 45268

January 1999

Method TO-10A
Acknowledgements

This Method was prepared for publication in the *Compendium of Methods for the Determination of Toxic Organic Compounds in Ambient Air, Second Edition* (EPA/625/R-96/010b), which was prepared under Contract No. 68-C3-0315, WA No. 3-10, by Midwest Research Institute (MRI), as a subcontractor to Eastern Research Group, Inc. (ERG), and under the sponsorship of the U.S. Environmental Protection Agency (EPA). Justice A. Manning, John Burckle, and Scott R. Hedges, Center for Environmental Research Information (CERI), and Frank F. McElroy, National Exposure Research Laboratory (NERL), all in the EPA Office of Research and Development (ORD), were responsible for overseeing the preparation of this method. Additional support was provided by other members of the Compendia Workgroup, which include:

- John Burckle, U.S. EPA, ORD, Cincinnati, OH
- James L. Cheney, Corps of Engineers, Omaha, NB
- Michael Davis, U.S. EPA, Region 7, KC, KS
- Joseph B. Elkins Jr., U.S. EPA, OAQPS, RTP, NC
- Robert G. Lewis, U.S. EPA, NERL, RTP, NC
- Justice A. Manning, U.S. EPA, ORD, Cincinnati, OH
- William A. McClenny, U.S. EPA, NERL, RTP, NC
- Frank F. McElroy, U.S. EPA, NERL, RTP, NC
- Heidi Schultz, ERG, Lexington, MA
- William T. "Jerry" Winberry, Jr., EnviroTech Solutions, Cary, NC

Method TO-10 was originally published in March of 1989 as one of a series of peer reviewed methods in the second supplement to *"Compendium of Methods for the Determination of Toxic Organic Compounds in Ambient Air,"* EPA 600/4-89-018. In an effort to keep these methods consistent with current technology, Method TO-10 has been revised and updated as Method TO-10A in this Compendium to incorporate new or improved sampling and analytical technologies. In addition, this method incorporates ASTM Method D 4861-94, *Standard Practice for Sampling and Analysis of Pesticides and Polychlorinated Biphenyls in Air*.

This Method is the result of the efforts of many individuals. Gratitude goes to each person involved in the preparation and review of this methodology.

Author(s)
- Robert G. Lewis, U.S. EPA, NERL, RTP, NC

Peer Reviewers
- William T. "Jerry" Winberry, Jr., EnviroTech Solutions, Cary, NC
- Irene D. DeGraff, Supelco, Bellefonte, PA
- Lauren Drees, U.S. EPA, NRMRL, Cincinnati, OH

Finally, recognition is given to Frances Beyer, Lynn Kaufman, Debbie Bond, Cathy Whitaker, and Kathy Johnson of Midwest Research Institute's Administrative Services staff whose dedication and persistence during the development of this manuscript has enabled it's production.

DISCLAIMER

This Compendium has been subjected to the Agency's peer and administrative review, and it has been approved for publication as an EPA document. Mention of trade names or commercial products does not constitute endorsement or recommendation for use.

METHOD TO-10A

Determination Of Pesticides And Polychlorinated Biphenyls In Ambient Air Using Low Volume Polyurethane Foam (PUF) Sampling Followed By Gas Chromatographic/Multi-Detector Detection (GC/MD)

TABLE OF CONTENTS

Page

1. Scope 10A-1

2. Summary of Method 10A-1

3. Significance 10A-2

4. Applicable Documents 10A-2
   4.1 ASTM Standards 10A-2
   4.2 EPA Documents 10A-2
   4.3 Other Documents 10A-3

5. Definitions 10A-3

6. Interferences 10A-3

7. Equipment and Materials 10A-4
   7.1 Materials for Sample Collection 10A-4
   7.2 Equipment for Analysis 10A-5
   7.3 Reagents and Other Materials 10A-5

8. Assembly and Calibration of Sampling System 10A-6
   8.1 Description of Sampling Apparatus 10A-6
   8.2 Calibration of Sampling System 10A-6

9. Preparation of PUF Sampling Cartridges 10A-6

10. Sampling 10A-7

11. Sample Extraction Procedure 10A-8
    11.1 Sample Extraction 10A-8
    11.2 Sample Cleanup 10A-9

TABLE OF CONTENTS (continued)

Page

12. Analytical Procedure 10A-10
    12.1 Analysis of Organochlorine Pesticides by Capillary Gas Chromatography with Electron Capture Detector (GC/ECD) 10A-10
    12.2 Analysis of Organophosphorus Pesticides by Capillary Gas Chromatography with Flame Photometric or Nitrogen-Phosphorus Detectors (GC/FPD/NPD) 10A-11
    12.3 Analysis of Carbamate and Urea Pesticides by Capillary Gas Chromatography with Nitrogen-Phosphorus Detector 10A-11
    12.4 Analysis of Carbamate, Urea, Pyrethroid, and Phenolic Pesticides by High Performance Liquid Chromatography (HPLC) 10A-11
    12.5 Analysis of Pesticides and PCBs by Gas Chromatography with Mass Spectrometry Detection (GC/MS) 10A-12
    12.6 Sample Concentration 10A-12

13. Calculations 10A-13
    13.1 Determination of Concentration 10A-13

14. Sampling and Retention Efficiencies 10A-15
    14.1 General 10A-15
    14.2 Determining SE 10A-15

15. Performance Criteria and Quality Assurance 10A-17
    15.1 Standard Operating Procedures (SOPs) 10A-17
    15.2 Process, Field, and Solvent Blanks 10A-17
    15.3 Sampling Efficiency and Spike Recovery 10A-17
    15.4 Method Precision and Bias 10A-18
    15.5 Method Safety 10A-18

16. References 10A-18

METHOD TO-10A

Determination Of Pesticides And Polychlorinated Biphenyls In Ambient Air Using Low Volume Polyurethane Foam (PUF) Sampling Followed By Gas Chromatographic/Multi-Detector (GC/MD) Detection

1. Scope

1.1 This document describes a method for sampling and analysis of a variety of common pesticides and for polychlorinated biphenyls (PCBs) in ambient air. The procedure is based on the adsorption of chemicals from ambient air on polyurethane foam (PUF) or a combination of PUF and granular sorbent using a low volume sampler.

1.2 The low volume PUF sampling procedure is applicable to multicomponent atmospheres containing common pesticide concentrations from 0.001 to 50 $\mu g/m^3$ over 4- to 24-hour sampling periods. The limits of detection will depend on the nature of the analyte and the length of the sampling period.

1.3 Specific compounds for which the method has been employed are listed in Table 1. The analytical methodology described in Compendium Method TO-10A is currently employed by laboratories throughout the U.S. The sampling methodology has been formulated to meet the needs of common pesticide and PCB sampling in ambient air.

1.4 Compendium Method TO-10 was originally published in 1989. The method was further modified for indoor air application in 1990. In an effort to keep the method consistent with current technology, Compendium Method TO-10 has incorporated ASTM Method D4861-94 (1) and is published here as Compendium Method TO-10A.

2. Summary of Method

2.1 A low-volume (1 to 5 L/minute) sample is used to collect vapors on a sorbent cartridge containing PUF or PUF in combination with another solid sorbent. Airborne particles may also be collected, but the sampling efficiency is not known (2).

2.2 Pesticides and other chemicals are extracted from the sorbent cartridge with 5 percent diethyl ether in hexane and determined by gas chromatography coupled with an electron capture detector (ECD), nitrogen-phosphorus detector (NPD), flame photometric detector (FPD), Hall electrolytic conductivity detector (HECD), or a mass spectrometer (MS). For common pesticides, high performance liquid chromatography (HPLC) coupled with an ultraviolet (UV) detector or electrochemical detector may be preferable. This method describes the use of an electron capture detector.

2.3 Interferences resulting from analytes having similar retention times during GC analysis are resolved by improving the resolution or separation, such as by changing the chromatographic column or operating parameters, or by fractionating the sample by column chromatography.

3. Significance

3.1 Pesticide usage and environmental distribution are common to rural and urban areas of the United States. The application of pesticides can cause potential adverse health effects to humans by contaminating soil, water, air, plants, and animal life. However, human exposure to PCBs continues to be a problem because of their presence in the environment.

3.2 Many pesticides and PCBs exhibit bioaccumulative, chronic health effects; therefore, monitoring the presence of these compounds in ambient air is of great importance.

3.3 Use of a portable, low volume PUF sampling system allows the user flexibility in locating the apparatus. The user can place the apparatus in a stationary or mobile location. The portable sampling apparatus may be positioned in a vertical or horizontal stationary location (if necessary, accompanied with supporting structure). Mobile positioning of the system can be accomplished by attaching the apparatus to a person to test air in the individual's breathing zone.

3.4 Moreover, this method has been successfully applied to measurement of common pesticides in outdoor air, indoor air and for personal respiratory exposure monitoring (3).

4. Applicable Documents

4.1 ASTM Standards

- D1356 *Definition of Terms Relating to Atmospheric Sampling and Analysis*
- D4861-94 *Standard Practice for Sampling and Analysis of Pesticides and Polychlorinated Biphenyls in Air*
- E260 *Recommended Practice for General Gas Chromatography Procedures*
- E355 *Practice for Gas Chromatography Terms and Relationships*
- D3686 *Practice for Sampling Atmospheres to Collect Organic Compound Vapors (Activated Charcoal Tube Adsorption Method*
- D3687 *Practice for Analysis of Organic Compound Vapors Collected by the Activated Charcoal Tube Adsorption*
- D4185 *Practice for Measurement of Metals in Workplace Atmosphere by Atomic Absorption Spectrophotometry*

4.2 EPA Documents

- *Compendium of Methods for the Determination of Toxic Organic Compounds in Ambient Air: Method TO-10, Second Supplement,* U. S. Environmental Protection Agency, EPA 600/4-89-018, March 1989.
- *Manual of Analytical Methods for Determination of Pesticides in Humans and Environmental Standards,* U. S. Environmental Protection Agency, EPA 600/8-80-038, June 1980.
- *Compendium of Methods for the Determination of Air Pollutants in Indoor Air: Method IP-8,* U. S. Environmental Protection Agency, EPA 600/4-90-010, May 1990.

4.3 Other Documents

- Code of Federal Regulations, Title 40, Part 136, Method 604

5. Definitions

[Note: Definitions used in this document and in any user-prepared Standard operating procedures (SOPs) should be consistent with ASTM D1356, E260, and E355. All abbreviations and symbols are defined within this document at point of use.]

5.1 Sampling efficiency (SE)-ability of the sampling medium to trap analytes of interest. The percentage of the analyte of interest collected and retained by the sampling medium when it is introduced as a vapor in air or nitrogen into the air sampler and the sampler is operated under normal conditions for a period of time equal to or greater than that required for the intended use is indicated by %SE.

5.2 Retention efficiency (RE)-ability of sampling medium to retain a compound added (spiked) to it in liquid solution.

5.3 Static retention efficiency-ability of the sampling medium to retain the solution spike when the sample cartridge is stored under clean, quiescent conditions for the duration of the test period.

5.4 Dynamic retention efficiency (RE_d)-ability of the sampling medium to retain the solution spike when air or nitrogen is drawn through the sampling cartridge under normal operating conditions for the duration of the test period. The dynamic RE is normally equal to or less than the SE.

5.5 Retention time (RT)-time to elute a specific chemical from a chromatographic column, for a specific carrier gas flow rate, measured from the time the chemical is injected into the gas stream until it appears at the detector.

5.6 Relative retention time (RRT)-a rate of RTs for two chemicals for the same chromatographic column and carrier gas flow rate, where the denominator represents a reference chemical.

5.7 Surrogate standard-a chemically inert compound (not expected to occur in the environmental sample) that is added to each sample, blank, and matrix-spiked sample before extraction and analysis. The recovery of the surrogate standard is used to monitor unusual matrix effects, gross sample processing errors, etc. Surrogate recovery is evaluated for acceptance by determining whether the measured concentration falls within acceptable limits.

6. Interferences

6.1 Any gas or liquid chromatographic separation of complex mixtures of organic chemicals is subject to serious interference problems due to coelution of two or more compounds. The use of capillary or microbore columns with superior resolution or two or more columns of different polarity will frequently eliminate these problems. In addition, selectivity may be further enhanced by use of a MS operated in the selected ion monitoring (SIM) mode as the GC detector. In this mode, co-eluting compounds can often be determined.

6.2 The ECD responds to a wide variety of organic compounds. It is likely that such compounds will be encountered as interferences during GC/ECD analysis. The NPD, FPD, and HECD detectors are element specific, but are still subject to interferences. UV detectors for HPLC are nearly universal, and the electrochemical detector may also respond to a variety of chemicals. Mass spectrometric analyses will generally provide positive identification of specific compounds.

6.3 PCBs and certain organochlorine pesticides (e.g., chlordane) are complex mixtures of individual compounds which can cause difficulty in accurately quantifying a particular formulation in a multiple component mixture. PCBs may interfere with the determination of pesticides.

6.4 Contamination of glassware and sampling apparatus with traces of pesticides or PCBs can be a major source of error, particularly at lower analyte concentrations. Careful attention to cleaning and handling procedures is required during all steps of sampling and analysis to minimize this source of error.

6.5 The general approaches listed below should be followed to minimize interferences.

6.5.1 Polar compounds, including certain pesticides (e.g., organophosphorus and carbamate classes) can be removed by column chromatography on alumina. Alumina clean-up will permit analysis of most organochlorine pesticides and PCBs (4).

6.5.2 PCBs may be separated from other organochlorine pesticides by column chromatography on silicic acid (5,6).

6.5.3 Many pesticides can be fractionated into groups by column chromatography on Florisil (6).

7. Equipment and Materials

7.1 Materials for Sample Collection

7.1.1 Continuous-Flow Sampling Pump (see Figure 1). The pump should provide a constant air flow ($\leq\pm5\%$), be quiet and unobtrusive, with a flow rate of 1 to 5 L/min. Sources of equipment are Supelco, Supelco Park, Bellefonte, PA; SKC, 334 Valley View Road, Eighty Four, PA and other manufacturers.

7.1.2 Sampling Cartridge (see Figure 2). Constructed from a 20-mm (I.D.) x 10-cm borosilicate glass tube drawn down to a 7-mm (O.D.) open connection for attachment to the pump by way of flexible tubing (see Figure 1).

7.1.3 Sorbent, Polyurethane Foam (PUF). Cut into a cylinder, 22-mm I.D. and 7.6-cm long, fitted under slight compression inside the cartridge. The PUF should be of the polyether type, (density of 0.0225 g/cm^3). This is the type of foam used for furniture upholstery, pillows, and mattresses. The PUF cylinders (plugs) should be slightly larger in diameter than the internal diameter of the cartridge. The PUF sorbent may be cut by one of the following means:

- With a high-speed cutting tool, such as a motorized cork borer. Distilled water should be used to lubricate the cutting tool.
- With a hot wire cutter. Care should be exercised to prevent thermal degradation of the foam.
- With scissors, while plugs are compressed between the 22-mm circular templates.

Alternatively, pre-extracted PUF plugs and glass cartridges may be obtained commercially.

7.1.4 Particle Filter. The collection efficiency of PUF for small-diameter (0.1 to 1 μm) airborne particles is only about 20% (7). However, most pesticides and PCBs exist in air under steady-state conditions primarily as vapors (8). Most particulate-associated pesticides or PCBs, if any, will also tend to be vaporized from filters after collection (9). Collocated sampling with and without a quartz-fiber pre-filter has yielded indistinguishable results for a broad spectrum of pesticides and PCBs found in indoor air (10).

7.1.4.1 An open-face filter may be attached to the sampling cartridge by means of a union for 1-in. (25.4-mm) tubing.

7.1.4.2 A 32-mm diameter quartz microfiber filter (e.g., Palifelex® type 2500 QAT-UP) is placed in the open end of the union and supported by means of a screen or perforated metal plate [e.g., a 304-stainless steel disk, 0.0312-in. (0.8-mm) thick with 1/16-in. (1.6-mm) diameter round perforations at 132 holes per in.^{2} (20 holes/cm^2), 41% open area.]. A 32-mm Viton® O-ring is placed between the filter and outer nut to effect a seal (see Figure 3). This filter holder is available from Supelco Park, Bellefonte, PA; SKC, 334 Forty Eight, PA; and other manufacturers.

7.1.5 Size-Selective Impactor Inlet. A size-selective impactor inlet with an average particle-size cut-point of 2.5 μm or 10 μm mean diameter at a sampling rate of 4 L/min may be used to exclude nonrespirable airborne particulate matter (11). This inlet, particle filter support, sampling cartridge holders are available commercially from Supelco, Supelco Park, Bellefonte, PA; SKC, 334 Forty Eight, PA and University Research Glassware (URG), Chapel Hill, NC.

7.1.6 Tenax-TA. 60/80 mesh, 2,6-diphenylphenylene oxide polymer. Commercially available from Supelco, Supelco Park, Bellefonte, PA and SKC, 334 Forty Eight, PA.

7.2 Equipment for Analysis

7.2.1 Gas Chromatograph (GC). The GC system should be equipped with appropriate detector(s) and either an isothermally controlled or temperature programmed heating oven. Improved detection limits may be obtained with a GC equipped with a cool on-column or splitless injector.

7.2.2 Gas Chromatographic Column. As an example, a 0.32 mm (I.D.) x 30 m DB-5, DB-17, DB-608, and DB-1701 are available. Other columns may also provide acceptable results.

7.2.3 HPLC Column. As an example, a 4.6-mm x 25-cm Zorbax SIL or μBondpak C-18. Other columns may also provide acceptable results.

7.2.4 Microsyringes. 5 μL volume or other appropriate sizes.

7.3 Reagents and Other Materials

7.3.1 Round Bottom Flasks. 500 mL, T 24/40 joints, best source.
7.3.2 Capacity Soxhlet Extractors. 300 mL, with reflux condensers, best source.
7.3.3 Kuderna-Danish Concentrator. 500 mL, with Snyder columns, best source.
7.3.4 Graduated Concentrator Tubes. 10 mL, with 19/22 stoppers, best source.
7.3.5 Graduated Concentrator Tubes. 1 mL, with 14/20 stoppers, best source.
7.3.6 TFE Fluorocarbon Tape. 1/2 in., best source.
7.3.7 Filter Tubes. Size 40 mm (I.D.) x 80 mm.
7.3.8 Serum Vials. 1 mL and 5 mL, fitted with caps lined with TFE fluorocarbon.
7.3.9 Pasteur Pipettes. 9 in., best source.
7.3.10 Glass Wool. Fired at 500°C, best source.
7.3.11 Boiling Chips. Fired at 500°C, best source..
7.3.12 Forceps. Stainless steel, 12 in., best source.
7.3.13 Gloves. Latex or precleaned (5% ether/hexane Soxhlet extracted) cotton.

7.3.14 Steam Bath.
7.3.15 Heating Mantles. 500 mL.
7.3.16 Analytical Evaporator. Nitrogen blow-down.
7.3.17 Acetone. Pesticide quality.
7.3.18 n-Hexane. Pesticide quality.
7.3.19 Diethyl Ether. Preserved with 2% ethanol.
7.3.20 Sodium Sulfate. Anhydrous analytical grade.
7.3.21 Alumina. Activity Grade IV, 100/200 mesh.
7.3.22 Glass Chromatographic Column. 2-mm I.D. x 15-cm long.
7.3.23 Soxhlet Extraction System. Including Soxhlet extractors (500 and 300 mL), variable voltage transformers, and cooling water source.
7.3.24 Vacuum Oven. Connected to water aspirator.
7.3.25 Die.
7.3.26 Ice Chest.
7.3.27 Silicic Acid. Pesticide grade.
7.3.28 Octachloronaphthalene (OCN). Research grade.
7.3.29 Florisil. Pesticide grade.

8. Assembly and Calibration of Sampling System

8.1 Description of Sampling Apparatus

8.1.1 A typical sampling arrangement utilizing a personal air pump is shown in Figure 1. This method is designed to use air sampling pumps capable of pulling air through the sampling cartridge at flow rates of 1 to 5 L/min. The method writeup presents the use of this device.

8.1.2 The sampling cartridge (see Figure 2) consists of a glass sampling cartridge in which the PUF plug or PUF/Tenax® TA "sandwich" is retained.

8.2 Calibration of Sampling System

8.2.1 Air flow through the sampling system is calibrated by the assembly shown in Figure 4. All air sampler must be calibrated in the laboratory before and after each sample collection period, using the procedure described below.

8.2.2 For accurate calibration, attach the sampling cartridge in-line during calibration. Vinyl bubble tubing or other means (e.g., rubber stopper or glass joint) may be used to connect the large end of the cartridge to the calibration system. Refer to ASTM Practice D3686 or D4185, for procedures to calibrate small volume air pumps.

9. Preparation of PUF Sampling Cartridges

9.1 The PUF adsorbent is white and yellows upon exposure to light. The "yellowing" of PUF will not affect its ability to collected pesticides or PCBs.

9.2 For initial cleanup and quality assurance purposes, the PUF plug is placed in a Soxhlet extractor and extracted with acetone for 14 to 24 hours at 4 to 6 cycles per hour.

[Note: If commercially pre-extracted PUF plugs are used, extraction with acetone is not required.]

Follow with a 16-hour Soxhlet extraction with 5% diethyl ether in n-hexane. When cartridges are reused, 5% diethyl ether in n-hexane can be used as the cleanup solvent.

9.3 Place the extracted PUF in a vacuum oven connected to a water aspirator and dry at room temperature for 2 to 4 hours (until no solvent odor is detected). Alternatively, they may be dried at room temperature in an air-tight container with circulating nitrogen (zero grade). Place the clean PUF plug into a labeled glass sampling cartridges using gloves and forceps. Wrap the cartridges with hexane-rinsed aluminum foil and placed in jars fitted with TFE fluorocarbon-lined caps. The foil wrapping may also be marked for identification using a blunt probe.

9.4 Granular sorbents may be combined with PUF to extend the range of use to compounds with saturation vapor pressures greater than 10^{-4} kPa (6). A useful combination trap can be assembled by "sandwiching" 0.6 g of Tenax-TA between two 22-mm I.D. x 3.8-cm pre-cleaned PUF plugs, as shown in Figure 2, Cartridge b. The Tenax-TA should be pre-extracted as described in Section 9.2. This trap may be extracted, vacuum dried, and removed without unloading it.

9.5 Analyze at least one assembled cartridge from each batch as a laboratory blank before the batch is acceptable. A blank level of <10 ng/plug for single component compounds is considered to be acceptable. For multiple component mixtures (e.g., PCBs), the blank level should be <100 ng/plug.

9.6 After cleaning, cartridges are considered clean up to 30 days when stored in sealed containers. Certified clean cartridges do not need to be chilled when shipping to the field.

10. Sampling

[Note: After the sampling system has been assembled and calibrated as per Section 8, it can be used to collect air samples as described below. The prepared sample cartridges should be used within 30 days of certification and should be handled only with latex or precleaned cotton gloves.]

10.1 Carefully remove the clean sample cartridge from the aluminum foil wrapping (the foil is returned to jars for later use) and attached to the pump with flexible tubing. The sampling assembly is positioned with the intake downward or in horizontal position. Locate the sampler in an unobstructed area at least 30 meters from any obstacle to air flow. The PUF or PUF/XAD-2 cartridge intake is positioned 1 to 2 m above ground level. Cartridge height above ground is recorded on the Compendium Method TO-10A field test data sheet (FTDS), as illustrated in Figure 5.

10.2 After the PUF cartridge is correctly inserted and positioned, the power switch is turned on and the sampling begins. The elapsed time meter is activated and the start time is recorded. The pumps are checked during the sampling process and any abnormal conditions discovered are recorded on the FTDS. Ambient temperatures and barometric pressures are measured and recorded periodically during the sampling procedure on the FTDS.

10.3 At the end of the desired sampling period, the power is turned off, the PUF cartridge removed from the sampler and wrapped with the original aluminum foil and placed in a sealed, labeled container for transport, under blue ice (<4°C), back to the laboratory. At least one field blank is returned to the laboratory with each group of

samples. A field blank is treated exactly like a sample except that no air is drawn through the cartridge. Samples are stored at <4°C or below until analyzed in the laboratory. Extraction must occur within 7 days of sampling and analysis within 40 days of extraction. Refer to ASTM D4861-94 (1), Appendix X3 for storage stability for various common pesticides and other compounds on PUF or PUF/Tenax TA sandwich.

11. Sample Extraction Procedure

[Note: Sample extraction should be performed under a properly ventilated hood.]

11.1 Sample Extraction

11.1.1 All samples should be extracted within 1 week after collection. All samples should be stored at <4°C until extracted.

11.1.2 All glassware should be washed with a suitable detergent; rinsed with deionized water, acetone, and hexane; rinsed again with deionized water; and fired in an oven (500°C).

11.1.3 Prepare a spiking solution for determination of extraction efficiency. The spiking solution should contain one or more surrogate compounds that have chemical structures and properties similar to those of the analytes of interest. Octachloronaphthalene (OCN) and dibutylchlorendate have been used as surrogates for determination of organochlorine pesticides by GC with an ECD. Tetrachloro-m-xylene and decachlorobiphenyl can also be used together to insure recovery of early and late eluting compounds. For organophosphate pesticides, tributylphosphate or triphenylphosphate may be employed as surrogates. The surrogate solution should be prepared so that addition of 100 μL into the PUF plug results in an extract containing the surrogate compound at the high end of the instrument's calibration range. As an example, the spiking solution for OCN is prepared by dissolving 10 mg of OCN in 10 mL of 10% acetone in n-hexane, followed by serial dilution n-hexane to achieve a final spiking solution of OCN of 1 μg/mL.

[Note: Use the recoveries of the surrogate compounds to monitor for unusual matrix effects and gross sample processing errors. Evaluate surrogate recovery for acceptance by determining whether the measured concentration falls within the acceptance limits of 60-120 percent.]

11.1.4 The extracting solution (5% diethyl ether/hexane) is prepared by mixing 1900 mL of freshly opened hexane and 100 mL of freshly opened diethyl ether (preserved with ethanol) to a flask.

11.1.5 All clean glassware, forceps, and other equipment to be used should be rinsed with 5% diethyl ether/ hexane and placed on rinsed (5% diethyl ether/hexane) aluminum foil until use. The condensing towers should also be rinsed with 5% diethyl ether/hexane. Then add 300 mL or 5% diethyl ether/hexane to the 500 mL round bottom boiling flask and add up to three boiling granules.

11.1.6 Using precleaned (i.e., 5% diethyl ether/hexane Soxhlet extracted) cotton gloves, the glass PUF cartridges are removed from the sealed container, the PUF removed from the glass container and is placed into the 300 mL Soxhlet extractor using prerinsed forceps.

[Note: If "sandwich" trap is used, carefully clean outside walls of cartridge with hexane-soaked cotton swabs or laboratory tissues (discard) and place cartridge into extractor with intake (large end) downward.]

11.1.7 Before extraction begins, add 100 µL of the OCN solution directly to the top of the PUF plug.

[Note: Incorporating a known concentration of the solution onto the sample provides a quality assurance check to determine recovery efficiency of the extraction and analytical processes.]

11.1.8 Connect the Soxhlet extractor to the 500 mL boiling flask and condenser. Wet the glass joints with 5% diethyl ether/hexane to ensure a tight seal between the fittings. If necessary, the PUF plug can be adjusted using forceps to wedge it midway along the length of the siphon. The above procedure should be followed for all samples, with the inclusion of a blank control sample.

11.1.9 The water flow to the condenser towers of the Soxhlet extraction assembly should be checked and the heating unit turned on. As the samples boil, the Soxhlet extractors should be inspected to ensure that they are filling and siphoning properly (4 to 6 cycles/hour). Samples should cycle for a minimum of 16 hours.

11.1.10 At the end of the extracting process (minimum of 16 hours), the heating unit is turned off and the sample cooled to room temperature.

11.1.11 The extracts are then concentrated to 5 mL using a Kuderna-Danish (K-D) apparatus. The K-D is set up, assembled with concentrator tubes, and rinsed. The lower end of the filter tube is packed with glass wool and filled with sodium sulfate to a depth of 40 mm. The filter tube is then placed in the neck of the K-D. The Soxhlet extractors and boiling flasks are carefully removed from the condenser towers and the remaining solvent is drained into each boiling flask. Sample extract is carefully poured through the filter tube into the K-D. Each boiling flask is rinsed three times by swirling hexane along the sides. Once the sample has drained, the filter tube is rinsed down with hexane. Each Synder column is attached to the K-D and rinsed to wet the joint for a tight seal. The complete K-D apparatus is placed on a steam bath and the sample is evaporated to approximately 5 mL.

[Note: Do not allow samples to evaporate to dryness.]

Remove sample from the steam bath, rinse Synder column with minimum of hexane, and allow to cool. Adjust sample volume to 10 mL in a concentrator tube, close with glass stopper and seal with TFE fluorocarbon tape. Alternatively, the sample may be quantitatively transferred (with concentrator tube rinsing) to prescored vials and brought up to final volume. Concentrated extracts are stored at <4°C until analyzed. Analysis should occur no later than 40 days after sample extraction.

11.2 Sample Cleanup

11.2.1 If polar compounds (from example, organophosphorus and carbamate classes) that interfere with GC/ECD analysis are present, use column chromatographic cleanup or alumina. The sample cleanup will permit the analysis of most organochlorine pesticides or PCBs.

11.2.2 Before cleanup, the sample extract is carefully reduced to 1 mL using a gentle stream of clean nitrogen.

11.2.3 A glass chromatographic column (2-mm I.D. x 15-cm long) is packed with alumina, activity grade IV, and rinsed with approximately 20 mL of n-hexane. The concentrated sample extract is placed on the column and eluted with 10 mL of n-hexane at a rate of 0.5 mL/minute. The eluate volume is adjusted to exactly 10 mL and analyzed as per Section 12.

11.2.4 If both PCBs and organochlorine pesticides are sought, alternate cleanup procedures (5,6) may be required (i.e., silicic acid).

11.2.5 Finally, class separation and improved specificity can be achieved by column clean-up and separation on Florisil (6).

12. Analytical Procedure

12.1 Analysis of Organochlorine Pesticides by Capillary Gas Chromatography with Electron Capture Detector (GC/ECD)

[Note: Organochlorine pesticides, PCBs and many nonchlorinated pesticides are responsive to electron capture detection (see Table 1). Most of these compounds can be analyzed at concentration of 1 to 50 ng/mL by GC/ECD. The following procedure is appropriate. Analytical methods that have been used to determine pesticides and PCBs collected from air by this procedure have been published (12).]

12.1.1 Select GC column (e.g., 0.3-mm by 30-m DB-5 column) and appropriate GC conditions to separate the target analytes. Typical operating parameters for this column with splitless injection are: Carrier gas-chromatography grade helium at a flow rate of 1 to 2 mL/min and a column head pressure of 7 to 9 psi (48 to 60 kPa); injector temperature of 250°C; detector temperature of 350°C; initial oven temperature of 50°C held for 2.0 min., ramped at 15°C/min to 150°C for 8 min, ramped at 10°C/min to 295°C then held for 5 min; purge time of 1.0 min. A typical injection volume is 2 to 3 μL.

12.1.2 Remove sample extract from the refrigerator and allow to warm to room temperature.

12.1.3 Prepare standard solution from reference materials of known purity. Analytically pure standards of organochlorine pesticides and PCBs are available from several commercial sources.

12.1.4 Use the standard solutions of the various compounds of interest to determine relative retention times (RRTs) to an internal standard such as p,p'-DDE, aldrin or octachloronaphthalene. Use 1 to 3-μL injections or other appropriate volumes.

12.1.5 Determine detector linearity by injecting standard solutions of three different concentrations (amounts) that bracket the range of analyses. The calibration is considered linear if the relative standard deviation (RSD) of the response factors for the three standards is 20 percent or less.

12.1.6 Calibrate the system with a minimum of three levels of calibration standards in the linear range. The low standard should be near the analytical method detection limit. The calibration is considered linear if the relative standard deviation (RSD) of the response factors for the three standards is 20 percent or less. The initial calibration should be verified by the analysis of a standard from an independent source. Recovery of 85 to 115 percent is acceptable. The initial calibration curve should be verified at the begining of each day and after every ten samples by the analysis of the mid point standard; an RPD of 15% or less is acceptable for continuing use of the initial calibration curve.

12.1.7 Inject 1 to 3 μL of the sample extract. Record volume injected to the nearest 0.05 μL.

12.1.8 A typical ECD response for a mixture of single component pesticides using a capillary column is illustrated in Figure 6. If the response (peak height or area) exceeds the calibration range, dilute the extract and reanalyze.

12.1.9 Quantify PCB mixtures by comparison of the total heights or areas of GC peaks (minimum of 5) with the corresponding peaks in the best-matching standard. Use Aroclor 1242 for early-eluting PCBs and either Aroclor 1254 or Aroclor 1260 as appropriate for late-eluting PCBs.

12.1.10 If both PCBs and organochlorine pesticides are present in the same sample, use column chromatographic separation on silicic acid (5,6) prior to GC analysis.

12.1.11 If polar compounds are present that interfere with GC/ECD analysis, use column chromatographic cleanup or alumina, activity grade IV, in accordance with Section 11.2.

12.1.12 For confirmation use a second GC column such as DB-608. All GC procedures except GC/MS require second column confirmation.

12.1.13 For improved resolution use a capillary column such as an 0.25-mm I.D. x 30-m DB-5 with 0.25 μm film thickness. The following conditions are appropriate.

- Helium carrier gas at 1 mL/min.
- Column temperature program, 90°C (4 min)/16°C/min to 154°C/4°C/min to 270°C.
- Detector, ^{63}Ni ECD at 350°C.
- Make up gas, nitrogen, or 5% methane/95% argon at 60 mL/min.
- Splitless injection, 2 μL maximum.
- Injector temperature, 220°C.

12.1.14 Class separation and improved specificity can be achieved by column chromatographic separation on Florisil (6).

12.2 Analysis of Organophosphorus Pesticides by Capillary Gas Chromatography with Flame Photometric or Nitrogen-Phosphorus Detectors (GC/FPD/NPD)

[Note: Organophosphorus pesticides are responsive to flame photometric and nitrogen-phosphorus (alkali flame ionization) detection. Most of these compounds can be analyzed at concentrations of 50 to 500 ng/mL using either of these detectors.]

12.2.1 Procedures given in Section 12.1.1 through 12.1.9 and Section 12.1.13 through 12.1.14 apply, except for the selection of surrogates.

12.2.2 Use tributylphosphate, triphenylphosphate, or other suitable compound(s) as surrogates to verify extraction efficiency and to determine RRTs.

12.3 Analysis of Carbamate and Urea Pesticides by Capillary Gas Chromatography with Nitrogen-Phosphorus Detector

12.3.1 Trazine, carbamate, and urea pesticides may be determined by capillary GC (DB-5, DB-17, or DB-1701 stationary phase) using nitrogen-phosphorus detection or MS-SIM with detection limits in the 0.05 to 0.2 μL/mL range. Procedures given in Section 12.1.1 through 12.1.9 and Section 12.1.13 through 12.1.14 apply, except for the selection of surrogates, detector, and make up gas.

12.3.2 Thermal degradation may be minimized by reducing the injector temperature to 200°C. HPLC may also be used, but detection limits will be higher (1 to 5 μg/mL).

12.3.3 N-methyl carbamates may be determined using reverse-phase high performance liquid chromatography (HPLC) (C-18) (Section 12.4) and post-column derivatization with o-phthaldehyde and fluorescence detection (EPA Method 531). Detection limits of 0.01 to 0.1 μg/mL can be achieved.

12.4 Analysis of Carbamate, Urea, Pyrethroid, and Phenolic Pesticides by High Performance Liquid Chromatography (HPLC)

[Note: Many carbamate pesticides, urea pesticides, pyrethrins, phenols, and other polar pesticides may be analyzed by high HPLC with fixed or variable wavelength UV detection. Either reversed-phase or normal phase chromatography may be used. Detection limits are 0.2 to 10 μg/mL of extract.]

12.4.1 Select HPLC column (i.e., Zorbax-SIL, 46-mm I.D. x 25-cm, or μ-Bondapak C18, 3.9-mm x 30-cm, or equivalent).

12.4.2 Select solvent system (i.e., mixtures of methanol or acetonitrile with water or mixtures of heptane or hexane with isopropanol).

12.4.3 Follow analytical procedures given in Sections 12.1.2 through 12.1.9.

12.4.4 If interferences are present, adjust the HPLC solvent system composition or use column chromatographic clean-up with silica gel, alumina, or Florisil (6).

12.4.5 An electrochemical detector may be used to improve sensitivity for some ureas, carbamates, and phenolics. Much more care is required in using this detector, particularly in removing dissolved oxygen from the mobile phase and sample extracts.

12.4.6 Chlorophenol (di- through penta-) may be analyzed by GC/ECD or GC/MS after derivatization with pentafluorobenzylbromide (EPA Method 604).

12.4.7 Chlorinated phenoxyacetic acid herbicides and pentachlorophenol can be analyzed by GC/ECD or GC/MS after derivatization with diazomethane (EPA Method 515). DB-5 and DB-1701 columns (0.25-mm I.D. x 30-m) at 60 to 300°C/4°C per min have been found to perform well.

12.5 Analysis of Pesticides and PCBs by Gas Chromatography with Mass Spectrometry Detection (GC/MS)

[Note: A mass spectrometer operating in the selected ion monitoring mode is useful for confirmation and identification of pesticides.]

12.5.1 A mass spectrometer operating in the select ion monitoring (SIM) mode can be used as a sensitive detector for multi-residue determination of a wide variety of pesticides. Mass spectrometers are now available that provide detection limits comparable to nitrogen-phosphorus and electron capture detectors.

12.5.2 Most of the pesticides shown in Table 1 have been successfully determined by GC/MS/SIM. Typical GC operating parameters are as described in Section 12.1.1.

12.5.3 The mass spectrometer is typically operated using positive ion electron impact ionization (70 eV). Other instrumental parameters are instrument specific.

12.5.4 p-Terphenyl-d_{14} is commonly used as a surrogate for GC/MS analysis.

12.5.5 Quantification is typically performed using an internal standard method. 1,4-Dichlorobenzene, naphthalene-d_8, acenaphthene-d_{10}, phenanthrene-d_{10}, chrysene-d_{12} and perylene-d_{12} are commonly used as internal standards. Procedures given in Section 12.1.1 through 12.1.9 and Section 12.1.13 through 12.1.14 apply, except for the selection of surrogates, detector, and make up gas.

12.5.6 See ASTM Practice D 3687 for injection technique, determination of relative retention times, and other procedures pertinent to GC and HPLC analyses.

12.6 Sample Concentration

12.6.1 If concentrations are too low to detect by the analytical procedure of choice, the extract may be concentrated to 1 mL or 0.5 mL by carefully controlled evaporation under an inert atmosphere. The following procedure is appropriate.

12.6.2 Place K-D concentrator tube in a water bath and analytical evaporator (nitrogen blow-down) apparatus. The water bath temperature should be from 25°C to 50°C.

12.6.3 Adjust nitrogen flow through hypodermic needle to provide a gentle stream.

12.6.4 Carefully lower hypodermic needle into the concentrator tube to a distance of about 1 cm above the liquid level.

12.6.5 Continue to adjust needle placement as liquid level decreases.

12.6.6 Reduce volume to slightly below desired level.

12.6.7 Adjust to final volume by carefully rinsing needle tip and concentrator tube well with solvent (usually n-hexane).

13. Calculations

13.1 Determination of Concentration

13.1.1 The concentration of the analyte in the extract solution can be taken from a standard curve where peak height or area is plotted linearly against concentration in nanograms per milliliter (ng/mL). If the detector response is known to be linear, a single point is used as a calculation constant.

13.1.2 From the standard curve, determine the nanograms of analyte standard equivalent to the peak height or area for a particular compound.

13.1.3 Ascertain whether the field blank is contaminated. Blank levels should not exceed 10 ng/sample for organochlorine pesticides or 100 ng/sample for PCBs and other pesticides. If the blank has been contaminated, the sampling series must be held suspect.

13.1.4 Quantity of the compound in the sample (A) is calculated using the following equation:

$$A = 1000 \left(\frac{A_s \times V_e}{V_i} \right)$$

where:

A = total amount of analyte in the sample, ng.

A_s = calculated amount of material injected onto the chromatograph based on calibration curve for injected standards, ng.

V_e = final volume of extract, mL.

V_i = volume of extract injected, μL.

1000 = factor for converting microliters to milliliters.

13.1.5 The extraction efficiency (EE) is determined from the recovery of surrogate spike as follows:

$$EE(\%) = \left| \frac{S}{S_a} \right| [100]$$

where:

EE = extraction efficiency, %.

S = amount of spike recovered, ng.

S_a = amount of spike added to plug, ng.

The extraction efficiency (surrogate recovery) must fall between 60-120% to be acceptable.

13.1.6 The total volume of air sampled under ambient conditions is determined using the following equation:

$$V_a = \frac{\sum_{i=1}^{n} (T_i \times F_i)}{1000 \text{ L/m}^3}$$

where:

V_a = total volume of air sampled, m^3.

T_i = length of sampling segment between flow checks, min.

F_i = average flow during sampling segment, L/min.

13.1.7 The air volume is corrected to EPA standard temperature (25°C) and standard pressure (760 mm Hg) as follows:

$$V_s = V_a \left(\frac{P_b - P_w}{760 \text{ mm Hg}} \right) \left(\frac{298K}{t_A} \right)$$

where:

V_s = volume of air at standard conditions (25°C and 760 mm Hg), std. m^3.

V_a = total volume of air sampled, m^3.

P_b = average ambient barometric pressure, mm Hg.

P_w = vapor pressure of water at calibration temperature, mm Hg.

t_A = average ambient temperature, °C + 273.

13.1.8 If the proper criteria for a sample have been met, concentration of the compound in a standard cubic meter of air sampled is calculated as follows:

$$C_a(\text{ng/std. m}^3) = \left[\frac{(A)}{(V_s)} \right] \left[\frac{(100)}{(SE(\%))} \right]$$

where:

SE = sampling efficiency as determined by the procedure outlined in Section 14.

If it is desired to convert the air concentration value to parts per trillion (ppt) in dry air at standard temperature and pressure (STP), the following conversion is used:

$$\text{ppt} = 0.844\ (C_a)$$

The air concentration can be converted to parts per trillion (v/v) in air at STP as follows:

$$\text{pptv} = \left[\frac{(24.45)\ (C_a)}{(MW)} \right]$$

where:

MW = molecular weight of the compound of interest, g/g-mole.

13.1.9 If quantification is performed using an internal standard, a relative response factor (RRF) is calculated by the equation:

$$RRF = \left[\frac{(I_s)(C_{is})}{(I_{is})(C_s)}\right]$$

where:

I_s = integrated area of the target analyte peak, counts.

I_{is} = integrated area of the internal standard peak, counts.

C_{is} = concentration of the internal standard, ng/μL.

C_s = concentration of the analyte, ng/µL.

13.1.10 The concentration of the analyte (C_a) in the sample is then calculated as follows:

$$C_a = \frac{(I_s)(C_{is})}{(RRF)(I_{is})}$$

where:

C_a = concentration of analyte, ng/m^3

I_s = integrated area of the target analyte peak, counts.

RRF = relative response factor (see Section 13.1.10).

14. Sampling and Retention Efficiencies

14.1 General

14.1.1 Before using Compendium Method TO-10A, the user should determine the sampling efficiency for the compound of interest. The sampling efficiencies shown in Tables 2, 3, 4, and 5 were determined for approximately 1 m^3 of air at about 25°C, sampled at 3.8 L/min. The SE values in these tables may be used for similar sampling conditions; for other compounds or conditions, SE values must be determined.

14.1.2 Sampling efficiencies for the pesticides shown in Table 6 are for a flowrate of 3.8 L/min and at 25°C. For compounds not listed, longer sampling times, different flow rates, or other air temperatures, the following procedure may be used to determine sampling efficiencies.

14.2 Determining SE

14.2.1 SE is determined by a modified impinger assembly attached to the sampler pump, as illustrated in Figure 7. A clean PUF is placed in the pre-filter location and the inlet is attached to a nitrogen line.

[Note: Nitrogen should be used instead of air to prevent oxidation of the compounds under test. The oxidation would not necessarily reflect what may be encountered during actual sampling and may give misleading sampling efficiencies.]

Two PUF plugs (22-mm x 7.6-cm) are placed in the primary and secondary traps and are attached to the pump.

14.2.2 A standard solution of the compound of interest is prepared in a volatile solvent (i.e., hexane, pentane, or benzene). A small, accurately measured volume (i.e., 1 mL) of the standard solution is placed into the modified midget impinger. The sampler pump is set at the rate to be used in field application and then activated. Nitrogen is drawn through the assembly for a period of time equal to or exceeding that intended for field application. After the desired sampling test period, the PUF plugs are removed and analyzed separately as per Section 12.

14.2.3 The impinger is rinsed with hexane or another suitable solvent and quantitatively transferred to a volumetric flask or concentrator tube for analysis.

14.2.4 The sampling efficiency (SE) is determined using the following equation:

$$\% \ SE = \frac{W_1}{W_0 - W_r} \times 100$$

where:

W_1 = amount of compound extracted from the primary trap, ng.

W_o = original amount of compound added to the impinger, ng.

W_r = residue left in the impinger at the end of the test, ng.

14.2.5 If material is found in the secondary trap, it is an indication that breakthrough has occurred. The addition of the amount found in the secondary trap, W_2, to W_1, will provide an indication for the overall sampling efficiency of a tandem-trap sampling system. The sum of W_1, W_2 (if any), and W_r must equal (approximately ±10%) W_o or the test is invalid.

14.2.6 If the compound of interest is not sufficiently volatile to vaporize at room temperature, the impinger may be heated in a water bath or other suitable heater to a maximum of 50°C to aid volatilization. If the compound of interest cannot be vaporized at 50°C without thermal degradation, dynamic retention efficiency (RE_d) may be used to estimate sampling efficiency. Dynamic retention efficiency is determined in the manner described in Section 14.2.7. Table 7 lists those organochlorine pesticides which dynamic retention efficiencies have been determined.

14.2.7 A pair of PUF plugs is spiked by slow, dropwise addition of the standard solution to one end of each plug. No more than 0.5 to 1 mL of solution should be used. Amounts added to each plug should be as nearly the same as possible. The plugs are allowed to dry for 2 hours in a clean, protected place (i.e., desiccator). One spiked plug is placed in the primary trap so that the spiked end is at the intake and one clean unspiked plug is placed in the secondary trap. The other spiked plug is wrapped in hexane-rinsed aluminum foil and stored in a clean place for the duration of the test (this is the static control plug, Section 14.2.8). Prefiltered nitrogen or ambient air is drawn through the assembly as per Section 14.2.2.
[Note: Impinger may be discarded.]

Each PUF plug (spiked and static control) is analyzed separately as per Section 12.

14.2.8 This dynamic retention efficiency (% RE_d) is calculated as follows:

$$\% \ RE_d = \frac{W_1}{W_o} \times 100$$

where:

W_1 = amount of compound recovered from primary plug, ng.

W_o = amount of compound added to primary plug, ng.

If a residue, W_2, is found on the secondary plug, breakthrough has occurred. The sum of $W_1 + W_2$ must equal W_o, within 25% or the test is invalid. For most compounds tested by this procedure, % RE_d values are generally less than % SE values determined per Section 14.2. The purpose of the static RE_d determination is to establish any loss or gain of analyte unrelated to the flow of nitrogen or air through the PUF plug.

15. Performance Criteria and Quality Assurance

[Note: This section summarizes required quality assurance (QA) measures and provides guidance concerning performance criteria that should be achieved within each laboratory.]

15.1 Standard Operating Procedures (SOPs)

15.1.1 Users should generate SOPs describing the following activities accomplished in their laboratory: (1) assembly, calibration, and operation of the sampling system, with make and model of equipment used; (2) preparation, purification, storage, and handling of sampling cartridges; (3) assembly, calibration, and operation of the analytical system, with make and model of equipment used; and (4) all aspects of data recording and processing, including lists of computer hardware and software used.

15.1.2 SOPs should provide specific stepwise instructions and should be readily available to, and understood by, the laboratory personnel conducting the work.

15.2 Process, Field, and Solvent Blanks

15.2.1 One PUF cartridge from each batch of approximately twenty should be analyzed, without shipment to the field, for the compounds of interest to serve as a process blank.

15.2.2 During each sampling episode, at least one PUF cartridge should be shipped to the field and returned, without drawing air through the sampler, to serve as a field blank.

15.2.3 Before each sampling episode, one PUF plug from each batch of approximately twenty should be spiked with a known amount of the standard solution. The spiked plug will remain in a sealed container and will not be used during the sampling period. The spiked plug is extracted and analyzed with the other samples. This field spike acts as a quality assurance check to determine matrix spike recoveries and to indicate sample degradation.

15.2.4 During the analysis of each batch of samples, at least one solvent process blank (all steps conducted but no PUF cartridge included) should be carried through the procedure and analyzed.

15.2.5 All blank levels should not exceed 10 ng/sample for single components or 100 ng/sample for multiple component mixtures (i.e., for organochlorine pesticides and PCBs).

15.3 Sampling Efficiency and Spike Recovery

15.3.1 Before using the method for sample analysis, each laboratory must determine its sampling efficiency for the component of interest as per Section 14.

15.3.2 The PUF in the sampler is replaced with a hexane-extracted PUF. The PUF is spiked with a microgram level of compounds of interest by dropwise addition of hexane solutions of the compounds. The solvent is allowed to evaporate.

15.3.3 The sampling system is activated and set at the desired sampling flow rate. The sample flow is monitored for 24 hours.

15.3.4 The PUF cartridge is then removed and analyzed as per Section 12.

15.3.5 A second sampler, unspiked, is collected over the same time period to account for any background levels of components in the ambient air matrix.

15.3.6 In general, analytical recoveries and collection efficiencies of 75% are considered to be acceptable method performance.

15.3.7 Replicate (at least triplicate) determinations of collection efficiency should be made. Relative standard deviations for these replicate determinations of ±15% or less are considered acceptable performance.

15.3.8 Blind spiked samples should be included with sample sets periodically as a check on analytical performance.

15.4 Method Precision and Bias

15.4.1 Precision and bias in this type of analytical procedure are dependent upon the precision and bias of the analytical procedure for each compound of concern, and the precision and bias of the sampling process.

15.4.2 Several different parameters involved in both the sampling and analysis steps of this method collectively determine the precision and bias with which each compound is detected. As the volume of air sampled is increased, the sensitivity of detection increases proportionately within limits set by: (a) the retention efficiency for each specific component trapped on the polyurethane foam plug, and (b) the background interference associated with the analysis of each specific component at a given site sampled. The sensitivity of detection of samples recovered by extraction depends on: (a) the inherent response of the particular GC detector used in the determinative step, and (b) the extent to which the sample is concentrated for analysis. It is the responsibility of the analyst(s) performing the sampling and analysis steps to adjust parameters so that the required detection limits can be obtained.

15.4.3 The reproducibility of this method for most compounds for which it has been evaluated has been determined to range from ±5 to ±30% (measured as the relative standard deviation) when replicate sampling cartridges are used (N>5). Sample recoveries for individual compounds generally fall within the range of 90 to 110%, but recoveries ranging from 65 to 125% are considered acceptable. PUF alone may give lower recoveries for more volatile compounds (i.e., those with saturation vapor pressures $>10^{-3}$ mm Hg). In those cases, another sorbent or a combination of PUF and Tenax TA (see Figure 2) should be employed.

15.5 Method Safety

15.5.1 This procedure may involve hazardous materials, operations, and equipment. This method does not purport to address all of the safety problems associated with its use.

15.5.2 It is the user's responsibility to consult and establish appropriate safety and health practices and determine the applicability of regulatory limitations prior to the implementation of this procedure. This should be part of the user's SOP manual.

16. References

1. "Standard Practice for Sampling and Analysis of Pesticides and Polychlorinated Biphenyls in Air," *Annual Book of ASTM Standards*, Method D4861-94, ASTM, Philadelphia, PA.

2. Lewis, R., and MacLeod, K., "Portable Sampler for Pesticides and Semi-volatile Industrial Organic Chemicals in Air," *Analytical Chemistry*, Vol. 54, 1982, pp. 310-315.

3. Whitmore R.W., Immerman, F.W., Camann, D.E., Bond, A.E., Lewis, R.G., and Schaum, J.L., "Non-occupational Exposure to Pesticides for Residents of Two U.S. Cities," *Arch. Environ. Contam. Toxicol.*, 26, 47-59 (1994).

4. Lewis, R., and Brown, A., and Jackson, M., "Evaluation of Polyurethane Foam for Sampling of Pesticides, Polychlorinated Biphenyls and Polychlorinated Napththalenes in Ambient Air," *Analytical Chemistry*, Vol. 49, 1977, pp. 1668-1672.

5. Armour, J., and Burke, J., "Method for Separating Polychlorinated Biphenyls from DDT and Its Analogs," *Journal of the Association of Official Analytical Chemists*, Vol. 53, No. 4, 1970, pp. 761-768.

6. *Manual of Analytical Methods for the Analysis of Pesticides in Human and Environmental Samples*, U. S. Environmental Protection Agency, Research Triangle Park, NC 27711, Report No. EPA-600/8-80-038, June 1980 (NTIS No. PB82-208752).

7. Kogan, V., Kuhlman, M., Coutant, R., and Lewis, R., "Aerosol Filtration in Sorbent Beds," *Journal of the Air and Waste Management Association*, Vol. 43, 1993, p. 1367-1373.

8. Lewis, R., and Lee, R., "Air Pollution from Pesticide Sources, Occurrences and Dispersion," In: *Air Pollution from Pesticides and Agricultural Processes*, Lee, R., Editor, CRC Press, Boca Raton, FL, 1976, pp. 51-94.

9. Lewis, R., "Problem Associated with Sampling for Semi-volatile Organic Chemicals in Air," *Proceedings of the 1986 EPA/APCA Symposium on Measurement of Toxic Air Pollutants*, Air and Waste Management Association, Pittsburgh, PA, 1986, pp. 134-145.

10. Camann, D., Harding, J., and Lewis, R., "Trapping of Particle-Associated Pesticides in Indoor Air by Polyurethane Foam and Evaporation of Soil Track-In as a Pesticide Source," In: *Indoor Air* '90, Vol. 2, Walkinshaw, D., editor, Canada Mortgage and Housing Corp., Ottawa, 1990, pp. 621-626.

11. Marple, V., Rubow, K., Turner, W., and Spengler, J., "Low Flow Rate Sharp Cut Impactors for Indoor Air Sampling Design and Calibration," *Journal of the Air Pollution Control Association*. Vol. 37, 1987, pp. 1303-1307.

12. Hsu, J., Wheeler, H., Camann, D., Shatterberg, H., Lewis, R., and Bond, A., "Analytical Methods for Detection of Nonoccupational Exposure to Pesticides," *Journal of Chromatographic Science*, Vol. 26, 1988, pp. 181-189.

TABLE 1. COMPOUNDS FOR WHICH PROCEDURE HAS BEEN TESTED[1]

Compound	Recommended Analysis[2]	Compound	Recommended Analyses
Alachlor	GC/ECD	Heptachlor	GC/ECD
Aldrin	GC/ECD	Heptachlor epoxide	GC/ECD
Allethrin	HPLC/UV	Hexachlorobenzene	GC/ECD
Aroclor 1242	GC/ECD	Hexachlorocyclopentadiene[3,4]	GC/ECD
Aroclor 1254	GC/ECD	Lindane (γ-BHC)	GC/ECD
Aroclor 1260	GC/ECD	Linuron	HPLC/UV
Atrazine	GC/NPD	Malathion	GC/NPD or FPD
Bendiocarb	HPLC/UV	Methyl parathion	GC/NPD or FPD
BHC (α- and β-Hexachlorocyclohexanes)	GC/ECD	Methoxychlor	GC/FCD
Captan	GC/ECD	Metolachlor	GC/ECD
Carbaryl	HPLC/UV	Mexacarbate	GC/FCD
Carbofuran	HPLC/UV	Mirex	GC/ECD
Chlordane, technical	GC/ECD	Monuron	HPLC/UV
Chlorothalonil	GC/ECD	Trans-nonachlor	GC/ECD
Chlorotoluron	HPLC/UV	Oxychlordane	GC/ECD
Chlorpyritos	GC/ECD	Pentachlorobenzene	GC/ECD
2,4-D esters and salts	GC/ECD	Pentachlophenol	GC/ECD
Dacthal	GC/ECD	Permethrin (cis and trans)	HPLC/UV
ρ,ρ-'DDT	GC/ECD	o-Phenylphenol	HPLC/UV
ρ,ρ-'DDE	GC/ECD	Phorate	GC/NPD or FPD
Diazinon	GC/NPD or FPD	Propazine	GC/NPD
Dicloran	GC/ECD	Propoxur (Baygon)	HPLC/UV
Dieldrin	GC/ECD	Pyrethrin	HPLC/UV
Dichlorovos (DDVP)	GC/ECD	Resmethrin	HPLC/UV
Dicofol	GC/ECD	Ronnel	GC/ECD
Dicrotophos	HPLC/UV	Simazine	HPLC/UV
Diuron	HPLC/UV	Terbuthiuron	HPLC/UV
Ethyl parathion	GC/NPD or FPD	1,2,3,4-tetrachlorobenzene[3]	GC/ECD
Fenvalerate	HPLC/UV	1,2,3-trichlorobenzene[3]	GC/ECD
Fluometuron	HPLC/UV	2,3,5-trichlorophenol	GC/ECD
Folpet	GC/ECD	Trifluralin	GC/ECD

[1]The following recommendations are specific for that analyte for maximum sensitivity.
[2]GC = gas chromatography; ECD = electron capture detector, FPD = flame photometric detector; HPLC = high performance liquid chromatography; NPD = nitrogen-phosphorus detector; UV = ultraviolet absorption detector, (GC/MS (gas chromatography/mass spectrometry) may also be used).
[3]Using PUF/Tenax-TA "sandwich" trap.
[4]Compound is very unstable in solution.

TABLE 2. SAMPLING EFFICIENCIES FOR SOME ORGANOCHLORINE PESTICIDES

Compound	Quantity Introduced, μg[2]	Air Volume, m^3	Sampling efficiency, %		
			mean	RSD	n
α-Hexachlorocyclohexane (α-BHC)	0.005	0.9	115	8	6
γ-Hexachlorocyclohexane (Lindane)	0.05-1.0	0.9	91.5	8	5
Chlordane, technical	0.2	0.9	84.0	11	8
p,p'-DDT	0.6, 1.2	0.9	97.5	21	12
p,p'-DDE	0.2, 0.4	0.9	102	11	12
Mirex	0.6, 1.2	0.9	85.9	22	7
2,4-D Esters:					
Isopropyl	0.5	3.6	92.0	5	12
Butyl	0.5	3.6	82.0	10	11
Isobutyl	0.5	3.6	79.0	20	12
Isoctyl	0.5	3.6	>80[2]	--	--

[1]Air volume = 0.9 m^3.
[2]Not vaporized. Value base on %RE = 81.0 (RSD = 10%, n = 6).

TABLE 3. SAMPLING EFFICIENCIES FOR ORGANOPHOSPHORUS PESTICIDES

Compound	Quantity Introduced, μg[2]	Sampling efficiency, %		
		mean	RSD	n
Dichlorvos (DDVP)	0.2	72.0	13	2
Ronnel	0.2	106	8	12
Chlorpyrifos	0.2	108	9	12
Diazinon[1]	1.0	84.0	18	18
Methyl parathion[1]	0.6	80.0	19	18
Ethyl parathion[1]	0.3	75.9	15	18
Malathion[1]	0.3	100[3]	--	--

[1]Analyzed by gas chromatography with nitrogen phosphorus detector or flame photometric detector.
[2]Air volume = 0.9 m^3.
[3]Decomposed in generator; value based on %RE = 101 (RDS = 7, n = 4).

TABLE 4. SAMPLING EFFICIENCIES FOR SOME SEMI-VOLATILE ORGANOCHLORINE COMPOUNDS AND PCBs

Compound	Quantity Introduced, μg[1]	Sampling efficiency, %		
		mean	RSD	n
1,2,3-Trichlorobenzene	1.0	6.6[2]	22	8
1,2,3,4-Tetrachlorobenzene	1.0	62.3[2]	33	5
Pentachlorobenzene	1.0	94.0	12	5
Hexachlorobenzene	0.5, 1.0	94.5	8	5
Hexachlorocyclopentadiene	1.0	8.3[2]	12	5
2,4,5-Trichlorophenol	1.0	108	3	5
Pentachlorophenol	1.0	107	16	5
Aroclor 1242	0.1	96.0	15	6
Aroclor 1254	0.1	95.0	7	6
Aroclor 1260	0.1	109	5	11

[1]Air volume = 0.9 m^3.
[2]% SEs were 98, and 97% (n = 2), respectively, for these three compounds by the PUF/Tenax® TA "sandwich" trap.

TABLE 5. SAMPLING EFFICIENCIES FOR CARBAMATES, UREAS, TRIAZINES, AND PYRETHRINS

Compound	Spike Level, µg/plug	Static Recovery, %		n	Retention Efficiency, %		n	Sampling Efficiency, %		n
		mean	RSDP		mean	RSD		mean	RSD	
Carbamates:										
Propoxur	5	61.4	10	6	77.6	37	6	96.7	11	6
Carbofuran	15	55.3	12	6	64.2	46	6	87.2	14	6
Bendicarb	50	57.3	11	6	69.8	43	6	62.1	14	6
Mexacarbate	10	62.8	19	6	62.7	41	6	89.8	14	6
Carbaryl	100	56.6	14	6	63.6	53	6	0	13	6
Ureas:										
Monuron	19	87.0	6	6	91.2	6	5	0		
Diuron	20	84.1	8	6	90.0	2	5	0		
Linuron	20	86.7	8	6	92.5	4	5	0		
Terbuthiuron	18	85.0	8	6	88.8	8	5	0		
Fluometuron	20	91.4	10	6	101	3	5	0		
Chlortoluron	20	86.2	11	6	92.0	7	5	0		
Triazines:										
Simazine	10	103	6	5	101	9	6	0		
Atrazine	10	104	7	5	98.9	7	6	0		
Propazine	10	105	11	5	99.9	14	6	0		
Pyrethrins:										
Pyrethrin I	(9.7)	90.5	10	6	95.6	22	5	0		
Pyrethrin II	(6.1)	88.6	11	6	69.9	29	5	0		
Allethrin	25	69.2	9	5	58.3	12	6	0		
d-trans-Allethrin	25	76.8	9	6	74.4	9	5	0		
Dicrotophos	25	72.0	22	6	71.7	8	5	0		
Resmethrin	25	76.5	14	6	66.7	14	6	0		
Fenvalerate	25	87.9	3	6	57.2	20	3	0		

TABLE 6. EXTRACTION AND 24-H SAMPLING EFFICIENCIES FOR VARIOUS PESTICIDES AND RELATED COMPOUNDS

Compound	Extraction Efficiency[1], %		Sampling Eficiency[2], %, at					
			10 ng/m^3		100 ng/m^3		1,000 ng/m^3	
	mean	RSD	mean	RSD	mean	RSD	mean	RSD
Chlropyrifos	83.3	11.5	83.7	18.0	92.7	15.1	83.7	18.0
Pentachlorophenol	84.0	22.6	66.7	42.2	52.3	36.2	66.7	42.2
Chlordane	95.0	7.1	96.0	1.4	74.0	8.5	96.0	1.4
o-Phenylphenol	47.0	46.7	46.0	19.1	45.3	29.9	46.0	19.1
Lindane	96.0	6.9	91.7	11.6	93.0	2.6	91.7	11.6
DDVP	88.3	20.2	51.0	53.7	106.0	1.4	51.0	53.7
2,4-D Methyl Ester	--	--	75.3	6.8	58.0	23.6	75.3	6.8
Heptachlor	99.0	1.7	97.3	13.6	103.0	17.3	97.3	13.6
Aldrin	97.7	4.0	90.7	5.5	94.0	2.6	90.7	5.5
Dieldrin	95.0	7.0	82.7	7.6	85.0	11.5	82.7	7.6
Ronnel	80.3	19.5	74.7	12.1	60.7	15.5	74.7	12.2
Diazinon	72.0	21.8	63.7	18.9	41.3	26.6	63.7	19.9
trans-Nonachlor	97.7	4.0	96.7	4.2	101.7	15.3	96.7	4.2
Oxychlorodane	100.0	0.0	95.3	9.5	94.3	1.2	95.3	9.5
α-BHC	98.0	3.5	86.7	13.7	97.0	18.2	86.7	13.7
Bendiocarb	81.3	8.4	59.7	16.9	30.7	23.5	59.7	16.9
Chlorothalonil	90.3	8.4	76.7	6.1	70.3	6.5	76.7	6.1
Heptachlor Epoxide	100.0	0.0	95.3	5.5	97.7	14.2	95.3	5.5
Dacthal	--	--	87.0	9.5	95.3	22.2	87.0	9.5
Aroclor 1242	91.7	14.4	95.0	15.5	94.7	17.5	95.0	15.5

[1]Mean values for one spike at 550 ng/plug and two spikes at 5,500 ng/plug.
[2]Mean values for three determinations.

TABLE 7. EXTRACTION AND 24-H DYNAMIC RETENTION EFFICIENCIES FOR VARIOUS PESTICIDES AND RELATED COMPOUNDS

Compound	Extraction Efficiency[1], %		Sampling Eficiency[2], %, at					
			10 ng/m^3		100 ng/m^3		1,000 ng/m^3	
	mean	RSD	mean	RSD	mean	RSD	mean	RSD
Propoxur	77.5	71.4	92.0	--	91.7	22.8	101.0	18.4
Resmethrin	95.5	71.4	79.0	--	100.7	13.1	107.0	4.4
Dicofol	57.0	8.5	38.0	25.9	65.0	8.7	69.0	--
Captan	73.0	12.7	56.0	--	45.5	64.3	84.3	16.3
Carbaryl	74.0	82.0	102.0	--	61.0	--	113.0	6.1
Malathion	76.5	44.5	108.0	--	54.0	16.0	77.3	7.6
cis-Permethrin	88.7	10.3	101.0	28.5	85.0	26.9	89.0	11.3
trans-Permethrin	88.7	11.0	67.3	34.8	80.7	56.4	108.3	9.5
Methoxychlor	65.5	4.9	--	--	--	--	78.5	2.1
Atrazine	75.0	50.5	--	--	73.0	30.1	83.0	9.5
Folpet	86.7	11.7	--	--	78.0	--	93.0	--
Aroclor 1260	92.0	14.5	88.0	9.6	85.3	9.9	107.1	13.6

[1]Mean values for one spike at 550 ng/plug and two spikes at 5,500 ng/plug.
[2]Mean values for three determinations.

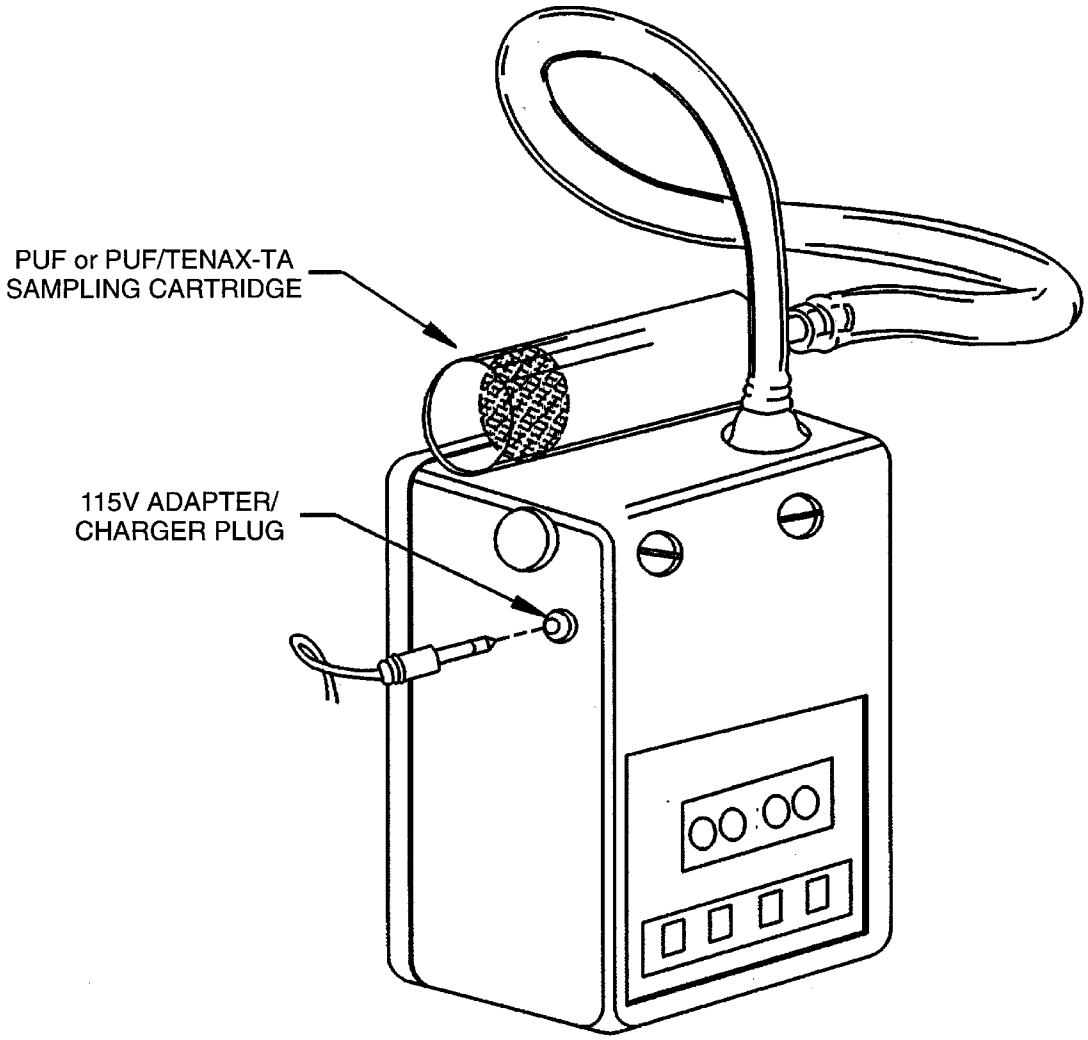

Figure 1. Low volume air sampler.

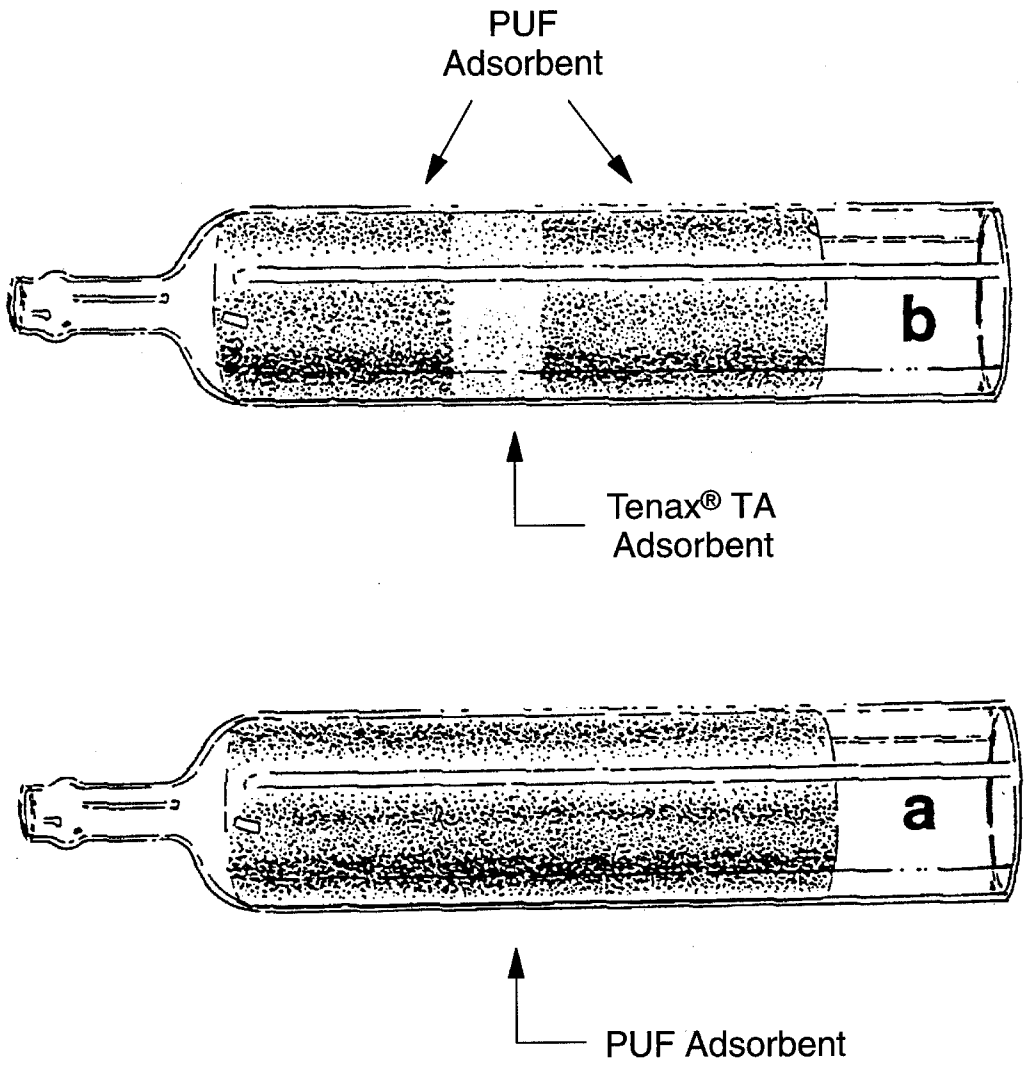

Figure 2. Polyurethane foam (PUF) sampling cartridge (a) and PUF-Tenax® TA "sandwich" sampling cartridge (b).

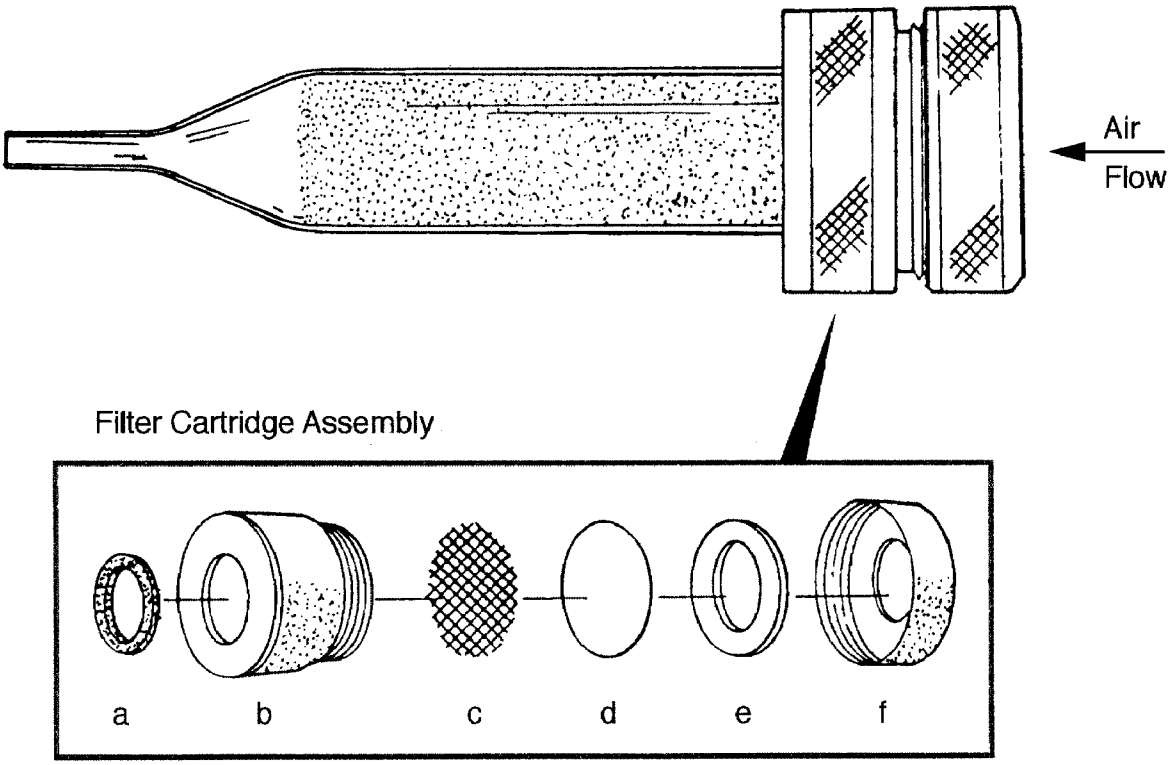

Figure 3. Open-face filter assembly attached to a PUF cartridge:
(a) Inner Viton® o-ring, (b) filter cartridge, (c) stainless steel screen, (d) quartz filter,
(e) filter ring, and (f) cartridge screw cap.

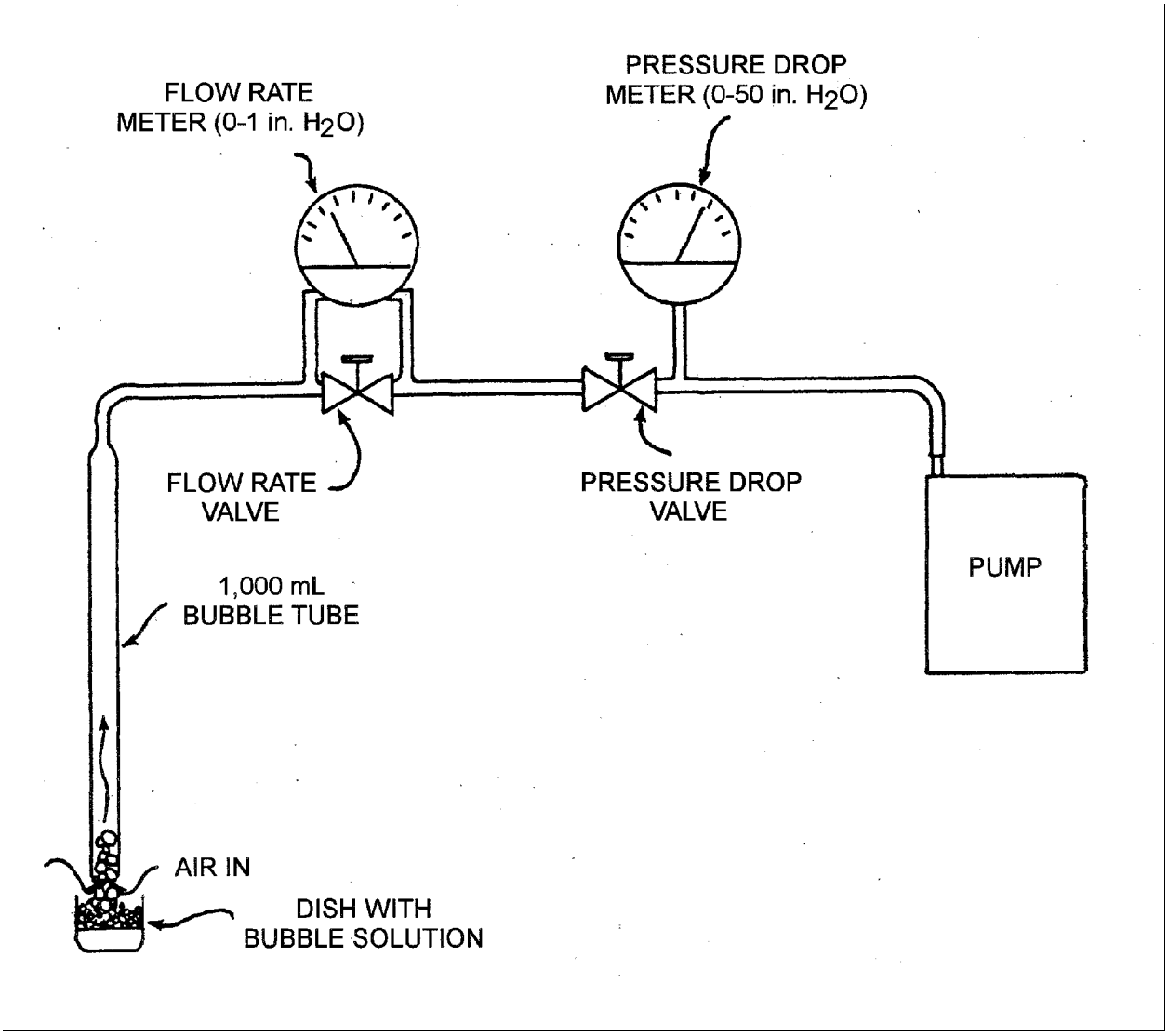

Figure 4. Calibration assembly for air sampler pump.

COMPENDIUM METHOD TO-10A
FIELD TEST DATA SHEET (FTDS)

I. GENERAL INFORMATION

PROJECT:_____ DATE(S) SAMPLED:_____
SITE:_____ TIME PERIOD SAMPLED:_____
LOCATION:_____ OPERATOR:_____
INSTRUMENT MODEL NO.:_____ CALIBRATED BY:_____
PUMP SERIAL NO.:_____ RAIN: ____YES _____NO

ADSORBENT CARTRIDGE INFORMATION:

	Cartridge 1	Cartridge 2	Cartridge 3	Cartridge 4
Type:	_____	_____	_____	_____
Adsorbent:	_____	_____	_____	_____
Serial No.:	_____	_____	_____	_____
Sample No.:	_____	_____	_____	_____

II. SAMPLING DATA

Cartridge Identifi-cation	Sampling Location	Ambient Temp., °F	Ambient Pressure, in Hg	Flow Rate (Q), mL/min		Sampling Period		Total Sampling Time, min.	Total Sample Volume, L
				Cartridge 1	Cartridge 2	Start	Stop		

III. FIELD AUDIT

	Cartridge 1	Cartridge 2	Cartridge 3	Cartridge 4
Audit Flow Check Within 10% of Set Point (Y/N)?	___ pre- _____ post-	_____ pre- _____ post-	_____ pre- _____ post-	_____ pre- _____ post-

CHECKED BY:_____

DATE:_____

Figure 5. Compendium Method TO-10A field test data sheet.

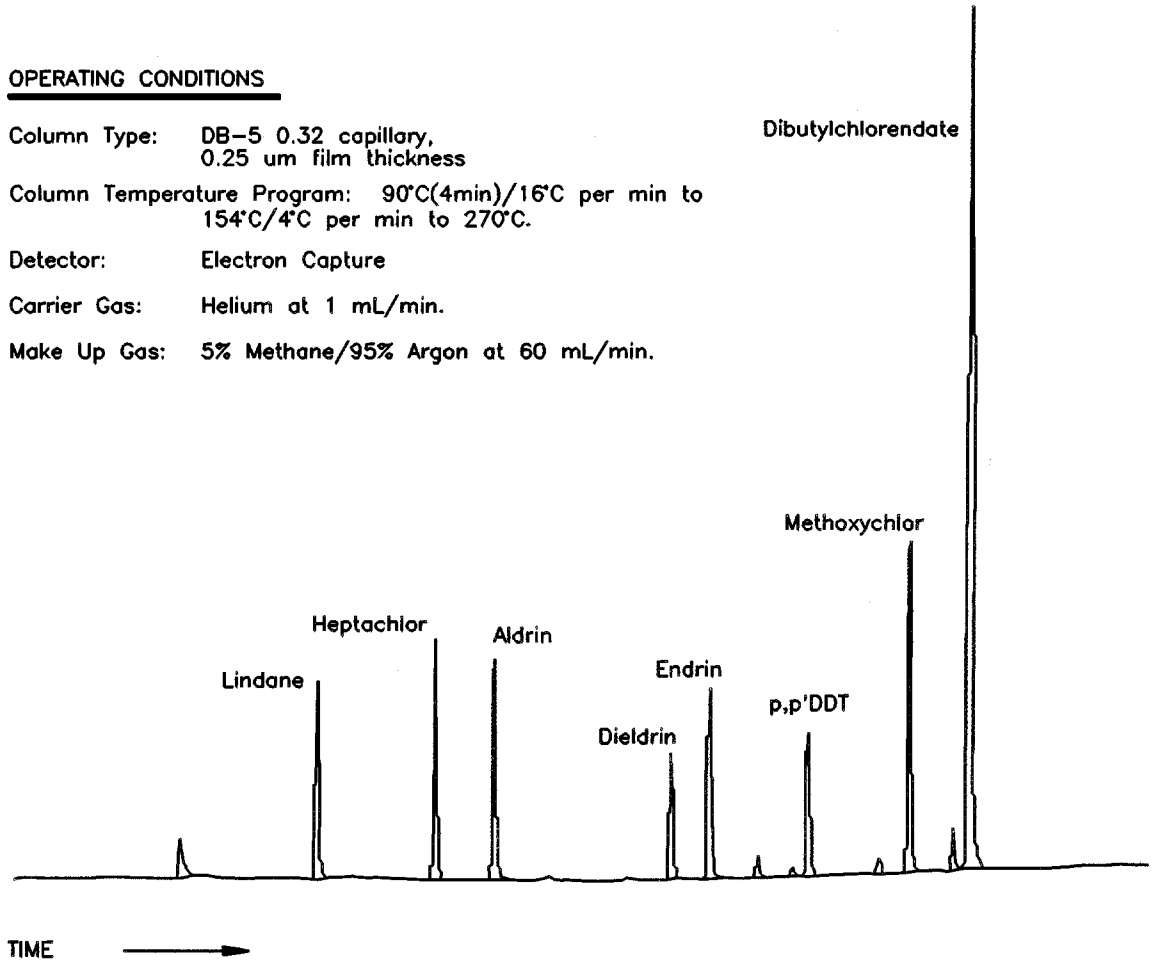

Figure 6. Chromatogram showing a mixture of single component pesticides determined by GC/ECD using a capillary column.

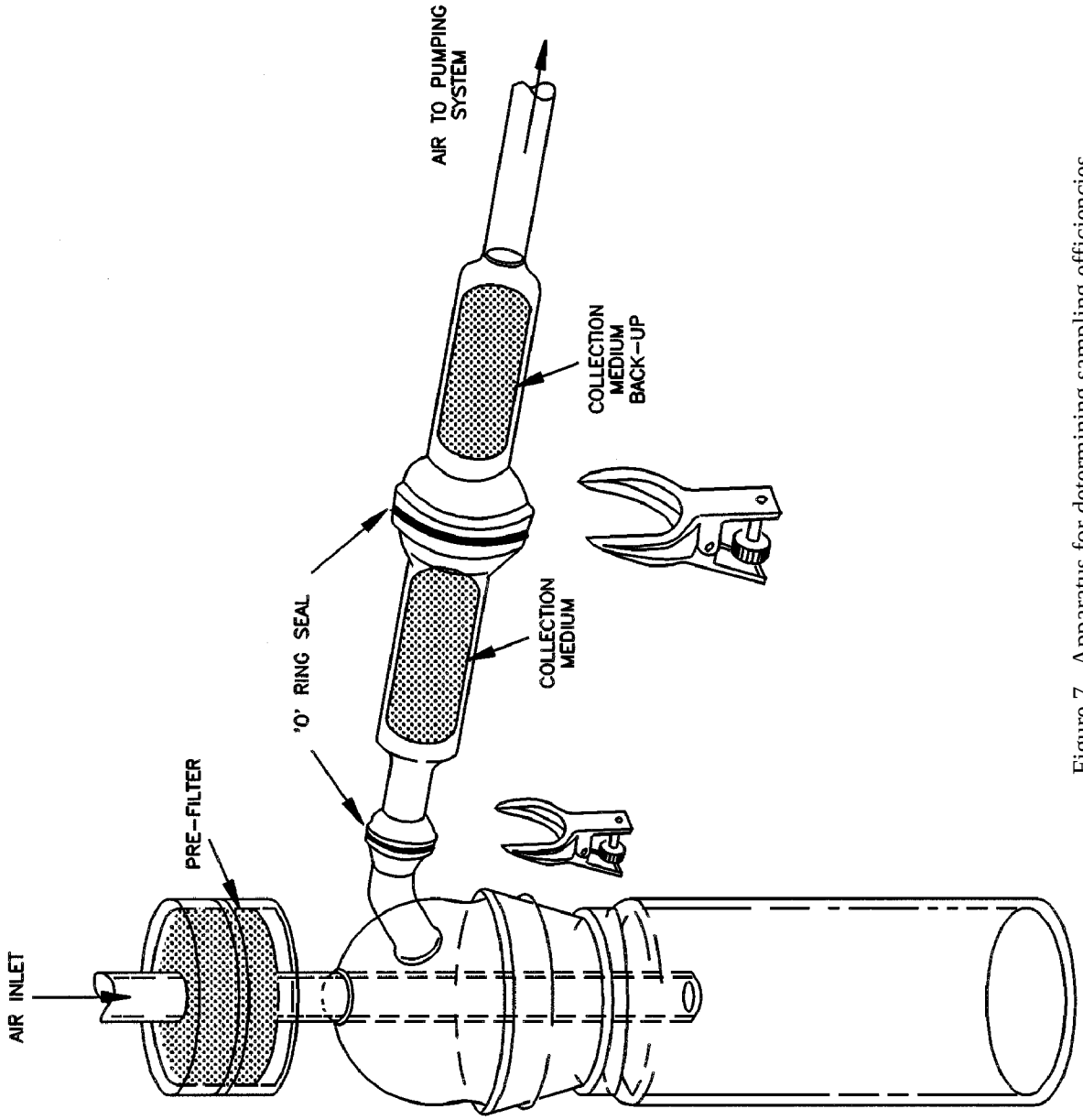

Figure 7. Apparatus for determining sampling efficiencies.