GENERAL ELECTRIC

NAMEPLATE

TITLE

FIRST MADE FOR

176B4367

CONT ON SHEET

SH NO. 1

REV NO.

UNLESS OTHERWISE SPECIFIED USE THE FOLLOWING:—

APPLIED PRACTICES

SURFACES

TOLERANCES ON MACHINED DIMENSIONS

FRACTIONS ±1

DECIMALS ±1

ANGLES ±1

STN STL C59F1E2 , 032 THK ETCHING
FILLED WITH BLACK BAKING ENAMEL.

PRINTS TO

REVISIONS

(4) .219
HOLES

DESIGNED FOR NOMINAL IMPEDANCE VOLTS OF 7.00%

6.88"

6.25"

10.50"

11.12"

GENERAL ELECTRIC

TRANSFORMER

NO. CLASS OA/FA/FOA THREE-PHASE 60H

VOLTAGE RATING 66000-13800Y/7970

KVA RATING 12000 CONTINUOUS 55C RISE SELF COOLED

KVA RATING 16000 CONTINUOUS 55C RISE FORCED AIR

KVA RATING 20000 CONTINUOUS 55C RISE FORCED OIL-AI

KVA RATING 22400 CONTINUOUS 65C RISE FORCED OIL-AI

IMPEDANCE VOLTS % 66000 — 13090Y VOLTS AT I

H V WINDING CONNECTIONS		
VOLTS	AMP 22400 KVA	DIAL POS
69300	187	1
67650	191	2
66000	196	3
64350	201	4
62700	206	5

L V WINDING CONNECTIONS		
VOLTS		AMP
L—L	L—N	22400 KVA
13800	7970	937

BASIC I INSULA LEVELS

ITEM

H_1 H_2
X_0 X_1

ALL WINDINGS ALUMINUM -

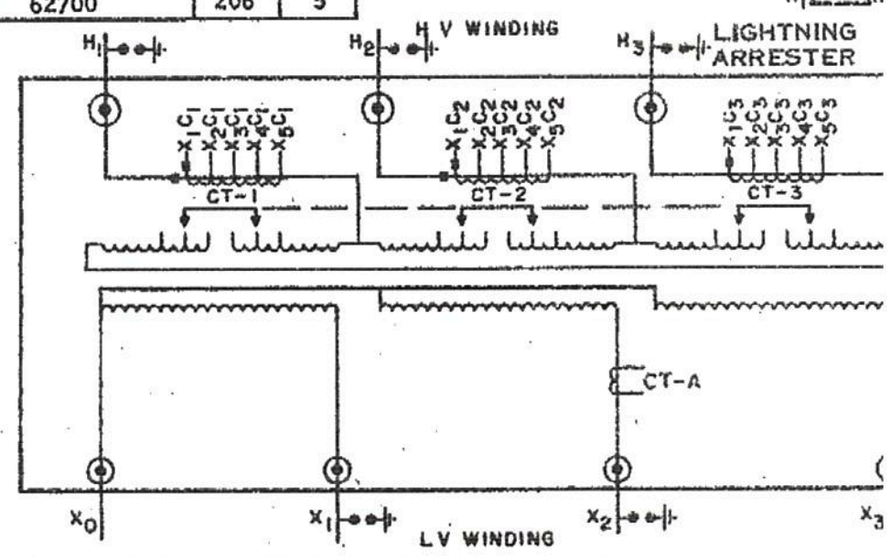

CT—A IS FOR USE WITH WINDING TEMPERATURE EQUIPMENT

CT'S 1, 2, 3 ARE 600:5

■ = POLARITY MARK

LIQUID LEVEL BELOW TOP SURFACE OF HIGHEST POINT OF MANHOLE FLANGE AT 25 C IS 12.10 INCHES.
LIQUID LEVEL CHANGES 1.11 INCH PER 10 C CHANGE IN LIQUID TEMPERATURE.
MAXIMUM OPERATING PRESSURES OF

APPROX. WEIGHTS I
TOTAL
UNTANKING