BOC GASES

Assay Laboratory
BOC GASES
600 Union Landing Road
Riverton,NJ 08077
(609) 829 7878

CERTIFICATE OF ANALYSIS
EPA Protocol Gas

CUSTOMER
Reading Compressed Plant
732 TULPEHOCKEN STREET
READING, PA 196010000

CUSTOMER PO NO:

Previous Certification Date(s):

CYLINDER NO	:	XC030330B
EXPIRATION DATE	:	29-Jul-2005
CERTIFICATION DATE	:	30-Jul-2002
CYLINDER PRESSURE	:	2000 psig
PRODUCT ID NO	:	24005985
LOT NUMBER	:	514573

ANALYTICAL INFORMATION

iis calibration standard has been certified per the 1997 EPA Traceability Protocol, Document EPA-600/97/121, Using Procedure G1. All Values certified be +/-1% NIST Traceable.

Do Not Use This Cylinder below 150 psig. i.e. 1.0 Megapascal

Analytical Results

Components	Requested Mixture	Certified Concentration	Analytical Uncertainty	Assay Dates
CARBON DIOXIDE	18.00 %	17.66 %	+/-1.00% NIST Traceable	07/30/02
[illegible]GEN	22.50 %	22.45 %	+/-1.00% NIST Traceable	07/30/02
[illegible]OGEN	BALANCE GAS			

CALIBRATION STANDARDS USED IN ASSAY

Type	LOT ID	Cylinder No	Concentration	Expiration
NTRM 82745X	97060202	XN002312B	19.98 +/- 0.20 % CO2/N2	10/02/03
SRM 2659A	71-C-33	CAL014640	20.92 +/- 0.11 % O2/N2	07/14/04

ANALYTICAL INSTRUMENTS USED IN ASSAY

Instrument/Make/Model	Analytical Principle	Last Multipoint Calibration
Siemens 5E DD721	NonDispersive Infrared	07/15/02
Siemens 5E BN805	Paramagnetic	07/09/02

A division of The BOC Group, Inc.
A Delaware Corporation

32

QA Approved W. Gonzalez

BOC GASES

Assay Laboratory
BOC GASES
600 Union Landing Road
Riverton,NJ 08077
(609) 829 7878

CERTIFICATE OF ANALYSIS
EPA Protocol Gas

CUSTOMER
BOC READING PA
732 TULPEHOCKEN STREET
READING, PA 196010000

CUSTOMER PO NO: CATLYST AIR FB501

Previous Certification Date(s):

CYLINDER NO	:	XC026217B
EXPIRATION DATE	:	12/14/03
CERTIFICATION DATE	:	01/02/02
CYLINDER PRESSURE	:	2000 psig
PRODUCT ID NO	:	02008242
LOT NUMBER	:	475394

ANALYTICAL INFORMATION

This calibration standard has been certified per the 1997 EPA Traceability Protocol, Document EPA-600/97/121, Using Procedure G1. All Values certifie
.o be +/-1% NIST Traceable.

Do Not Use This Cylinder below 150 psig. i.e. 1.0 Megapascal

Analytical Results

Components	Requested Mixture	Certified Concentration	Analytical Uncertainty	Assay Dates
NITRIC OXIDE	12.50 ppm	12.51 ppm	+/-1.00% NIST Traceable	12/07/01 & 01/02/0
TAL OXIDES OF NITROGEN		12.93 ppm		
NITROGEN	BALANCE GAS			

CALIBRATION STANDARDS USED IN ASSAY

Type	LOT ID	Cylinder No	Concentration	Expiration
SRM 2629A	50-F-12	XF003790B	19.70 +/- 0.20 ppm NITRIC OXIDE	06/01/04

ANALYTICAL INSTRUMENTS USED IN ASSAY

Instrument/Make/Model	Analytical Principle	Last Multipoint Calibration
API 200A S/N 864	Chemiluminescence	12/13/01

A division of The BOC Group, Inc.
A Delaware Corporation

33

QA Approved

BOC GASES

R

Assay Laboratory
BOC GASES
600 Union Landing Road
Riverton,NJ 08077
(609) 829 7878

CERTIFICATE OF ANALYSIS
EPA Protocol Gas

CUSTOMER
BOC READING PA
732 TULPEHOCKEN STREET
READING, PA 196010000

CUSTOMER PO NO: CATALYST AIR

Previous Certification Date(s):

CYLINDER NO	:	XC029400B
EXPIRATION DATE	:	05/13/04
CERTIFICATION DATE	:	05/22/02
CYLINDER PRESSURE	:	2000 psig
PRODUCT ID NO	:	02004252
LOT NUMBER	:	501085

ANALYTICAL INFORMATION

This calibration standard has been certified per the 1997 EPA Traceability Protocol, Document EPA-600/97/121, Using Procedure G1. All Values certifi to be +/-1% NIST Traceable.

Do Not Use This Cylinder below 150 psig. i.e. 1.0 Megapascal

Analytical Results

Components	Requested Mixture	Certified Concentration	Analytical Uncertainty	Assay Dates
NITRIC OXIDE	22.50 ppm	22.2 ppm	+/-1.00% NIST Traceable	05/14/02 & 05/21/(
TAL OXIDES OF NITROGEN		22.2 ppm		
NITROGEN	BALANCE GAS			

CALIBRATION STANDARDS USED IN ASSAY

Type	LOT ID	Cylinder No	Concentration	Expiration
SRM 1683B	45-T-106	FF16437	46.70 +/- 0.30 ppm NITRIC OXIDE	10/01/06

ANALYTICAL INSTRUMENTS USED IN ASSAY

Instrument/Make/Model	Analytical Principle	Last Multipoint Calibration
Nicolet 560 ADU9800406	FTIR	05/13/02

NOx Converter Test

CATALYST AIR MANAGEMENT, INC.
AIR QUALITY TESTING SERVICES

ANALYZER:	TECO 10A
SERIAL #:	10AR-25990-222
TIME:	15:46
DATE:	4-Jun-03
TEST:	NOx CONVERTER EFFICIENCY

DATE	TIME	NOx ppm
4-Jun-03	15:46	286.2
4-Jun-03	15:47	286.3
4-Jun-03	15:48	286.5
4-Jun-03	15:49	286.6
4-Jun-03	15:50	286.9
4-Jun-03	15:51	287.1
4-Jun-03	15:52	287.1
4-Jun-03	15:53	286.9
4-Jun-03	15:54	286.6
4-Jun-03	15:55	286.2
4-Jun-03	15:56	286.1
4-Jun-03	15:57	286
4-Jun-03	15:58	285.8
4-Jun-03	15:59	285.7
4-Jun-03	16:00	285.7
4-Jun-03	16:01	285.7
4-Jun-03	16:02	285.8
4-Jun-03	16:03	286
4-Jun-03	16:04	286.2
4-Jun-03	16:05	286.4
4-Jun-03	16:06	286.8
4-Jun-03	16:07	286.8
4-Jun-03	16:08	286.7
4-Jun-03	16:09	286.8
4-Jun-03	16:10	286.5
4-Jun-03	16:11	286.2
4-Jun-03	16:12	286
4-Jun-03	16:13	285.7
4-Jun-03	16:14	285.5
4-Jun-03	16:15	285.2
4-Jun-03	16:16	284.9
		AVG
		286.22
		ppm

Highest Concentration:	287.1
Ending Concentration:	284.9
Drift:	0.77%

CALIBRATION GASES

NOx:	503.7
O2:	20.00

ANALYZER SCALE : 500 ppm

CATALYST AIR MANAGEMENT, INC.
AIR QUALITY TESTING SERVICES

ANALYZER:	TECO 10A
SERIAL #:	10AR-25990-222
TIME:	14:52
DATE:	7/7/03
TEST:	NOx CONVERTER EFFICIENCY

DATE	TIME	NOx ppm
7/7/03	14:52	235.29
7/7/03	14:53	235.35
7/7/03	14:54	235.77
7/7/03	14:55	235.68
7/7/03	14:56	237.03
7/7/03	14:57	237.47
7/7/03	14:58	236.83
7/7/03	14:59	236.97
7/7/03	15:00	237.01
7/7/03	15:01	236.91
7/7/03	15:02	237.17
7/7/03	15:03	237.44
7/7/03	15:04	237.38
7/7/03	15:05	237
7/7/03	15:06	237.41
7/7/03	15:07	237.01
7/7/03	15:08	236.49
7/7/03	15:09	236.1
7/7/03	15:10	236.42
7/7/03	15:11	235.68
7/7/03	15:12	236.02
7/7/03	15:13	235.34
7/7/03	15:14	234.98
7/7/03	15:15	234.48
7/7/03	15:16	234.55
7/7/03	15:17	234.84
7/7/03	15:18	234.41
7/7/03	15:19	233.91
7/7/03	15:20	233.75
7/7/03	15:21	233.26
7/7/03	15:22	233.65
		AVG
		235.86
		ppm

Highest Concentration:	237.47
Ending Concentration:	233.65
Drift:	1.61%

CALIBRATION GASES

NOx:	491.0
O2:	22.45

ANALYZER SCALE : 500 ppm

APPENDIX 5
SAMPLE CALCULATIONS

CALCULATIONS FOR GAS CONCENTRATION

GAS CONCENTRATION (C_{gas})

$$C_{gas} = \left(\overline{C} - C_0\right)\left(\frac{C_{ma}}{C_m - C_o}\right)$$

C_{gas}	=	Effluent gas concentration, ppm
$\overline{C}$	=	Average gas concentration indicated by gas analyzer, dry basis, ppm
C_0	=	Average of initial and final system calibration bias check responses for the zero gas, ppm
C_m	=	Average of initial and final system calibration bias check responses for the upscale calibration gas, ppm
C_{ma}	=	Actual concentration of the upscale calibration gas, ppm

CALCULATION FOR EMISSION RATE

1. **EMISSION RATE *E(lb/mmbtu)*,**

$$E(lb/mmbtu) = C \times F_d\left(\frac{20.9}{20.9 - \%O_2}\right)$$

$$E(lb/mmbtu) = C \times F_c(100/CO_2)$$

Where:

C(lb/dscf) = Pollutant concentration (ppm) x conversion factor.

Conversion Factors:

NOx = 1.194×10^{-7}
SO_2 = 1.660×10^{-7}
CO = 7.274×10^{-8}
C_3H_8 = 1.145×10^{-7}

F_d(dscf/mmbtu) = "F" Factor for fuel type, (Ref. EPA Method 19)

F_d (Coal) = 9780	F_c (Coal) = 1800
F_d (Gas) = 8710	F_c (Gas) = 1040
F_d (Oil) = 9190	F_c (Oil) = 1420

2. **Heat input *HI* (mmBtu/hr)** *HI = fuel flow (cf/min) * Heat Value (mmBtu/cf)*60*

*HI = fuel flow (gal/min) * Heat Value (mmBtu/gal) * 60*

3. **Emission Rate *E(lb/hr)*** *E(lb/hr) = HI (mmBtu/hr) * E(lb/mmBtu)*

CALCULATION FOR RELATIVE ACCURACY

ARITHMETIC MEAN (of difference, d, of a data set)

$$d = \frac{1}{n}\sum_{i=1}^{n} d_i$$

Where n = Number of Data points.

ALGEBRAIC SUM (of the individual differences, d_i)

$$\sum_{i=1}^{n} d_i$$

STANDARD DEVIATION S_d

$$S_d = \left[\frac{\sum_{i=1}^{n} d_i^2 - \frac{\left(\sum_{i=1}^{n} d_i\right)^2}{n}}{n-1}\right]^{\frac{1}{2}}$$

CONFIDENCE COEFFICIENT, ***CC***

$$CC = t_{0.025}\frac{S_d}{\sqrt{n}}$$

For 9 tests $t_{0.975} = 2.306$
For 10 tests $t_{0.975} = 2.262$
For 11 tests $t_{0.975} = 2.228$
For 12 tests $t_{0.975} = 2.201$

RELATIVE ACCURACY, *RA*

$$RA = \frac{|\overline{d}| + |CC|}{\overline{RM}} \times 100$$

Run 1

CALCULATION QUALITY ASSURANCE CHECK

$C_{NO_x} = (22.55 - 0.17)(22.2/(22.25 - 0.17)) = 22.51$

$C_{O_2} = (14.50 - 0.01)(12.51/(12.55 - 0.01)) = 14.5$

C_{NO_x} @ 15% O_2 $= (22.51)(5.9/(20.9 - 14.5)) = 20.75$

E_{NO_x} lb/mmBtu $= 22.51(8710)(1.194 \times 10^{-7})(20.9/(20.9 - 14.5)) = 0.076$

E_{NO_x} lb/hr $= (0.076 \text{ lb/mmBtu})(436 \text{ mmBtu/hr}) = 33.14$

APPENDIX 6
FIGURES

CATALYST
AIR MANAGEMENT, INC.

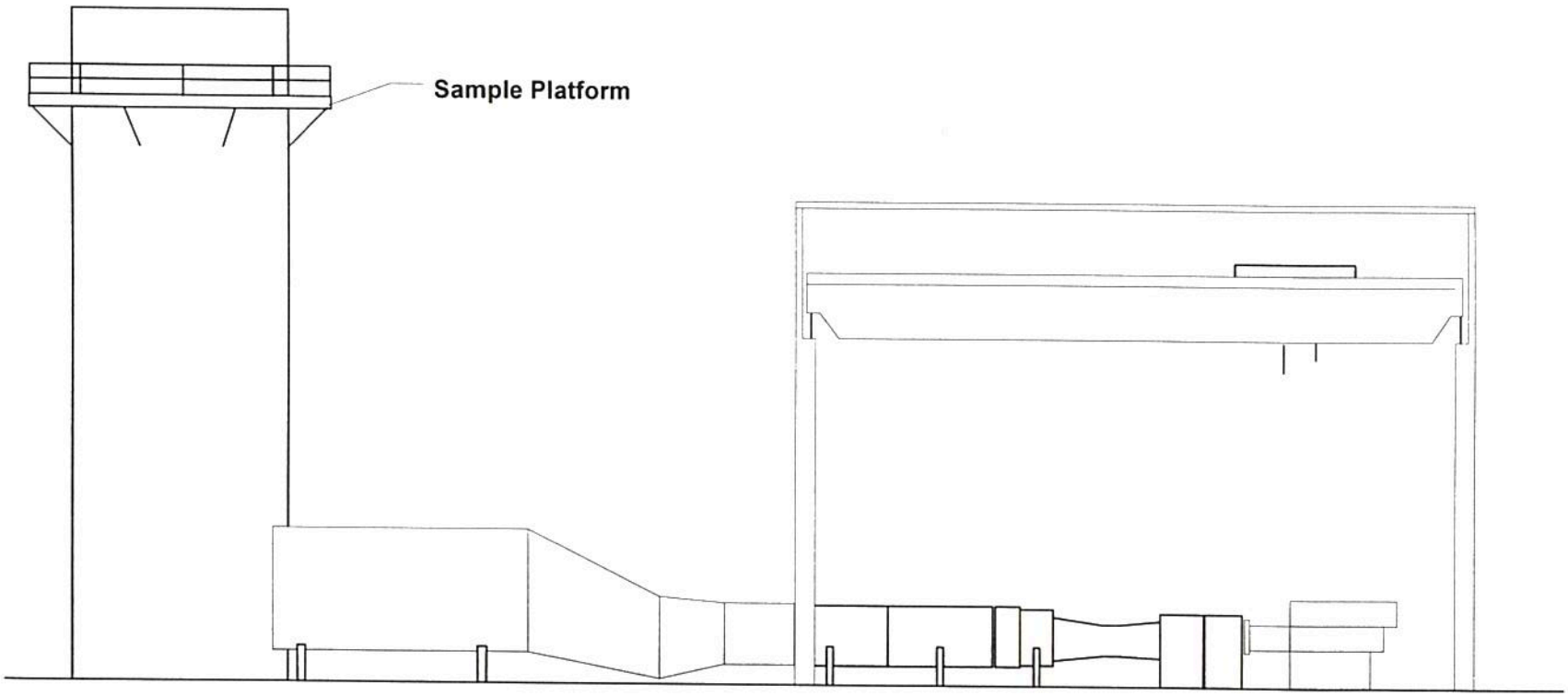

GENERAL ARRANGEMENT

TITLE UGI UTILITIES, INC. - HUNLOCK STATION		
DESCRIPTION CT GENERAL ARRANGEMENT		DATE 8/30/00
SCALE None	DRAWN BY MT TAYLOR	REVISED

CATALYST
AIR MANAGEMENT, INC.

Traverse Location

(Meters) From inside of stack
Typical 4 Ports
1. 0.4
2. 1.2
3. 2.0

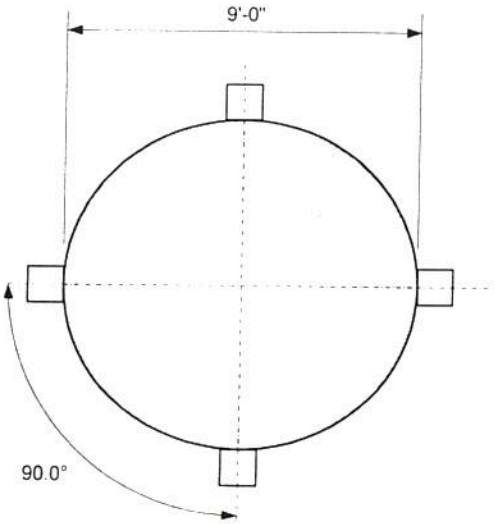

Section A-A
Scale: NONE

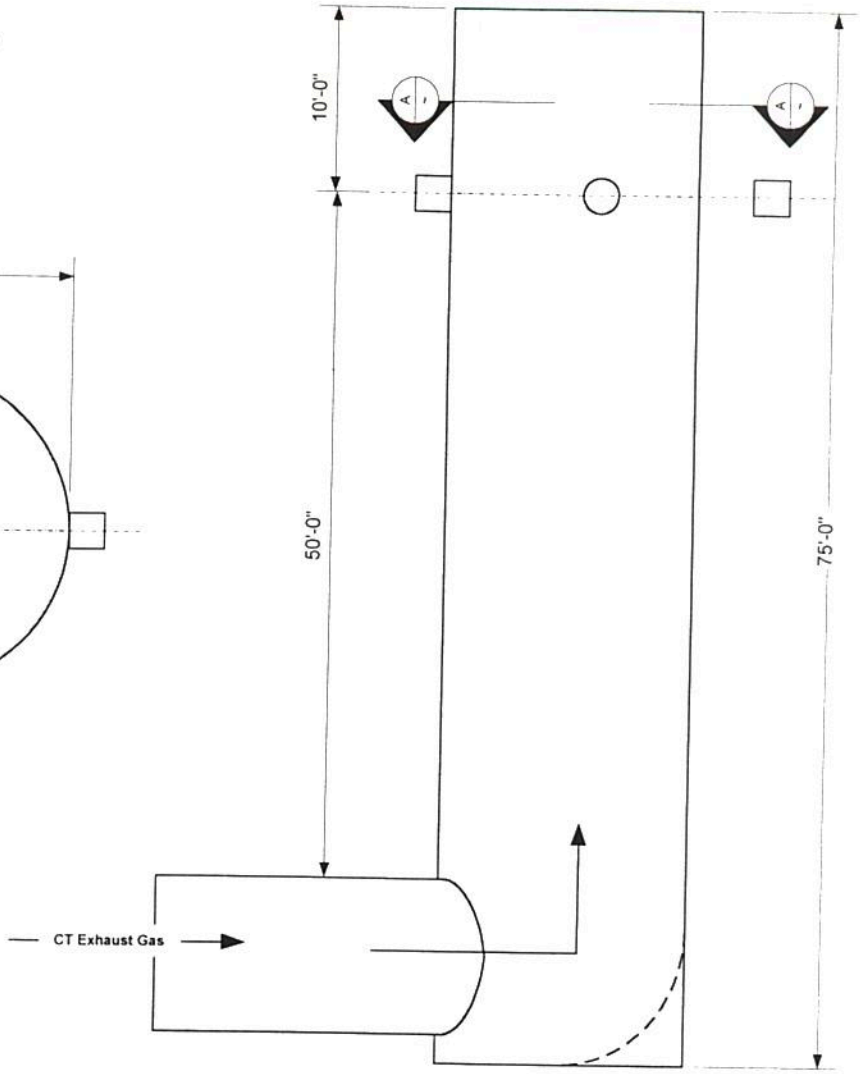

TITLE		
UGI UTILITIES, INC. - HUNLOCK STATION		
DESCRIPTION: CT STACK TEST LOCATIONS		DATE: 8/30/01
SCALE: NONE	DRAWN BY: MJ TAYLOR	REVISED:

CATALYST
AIR MANAGEMENT, INC.

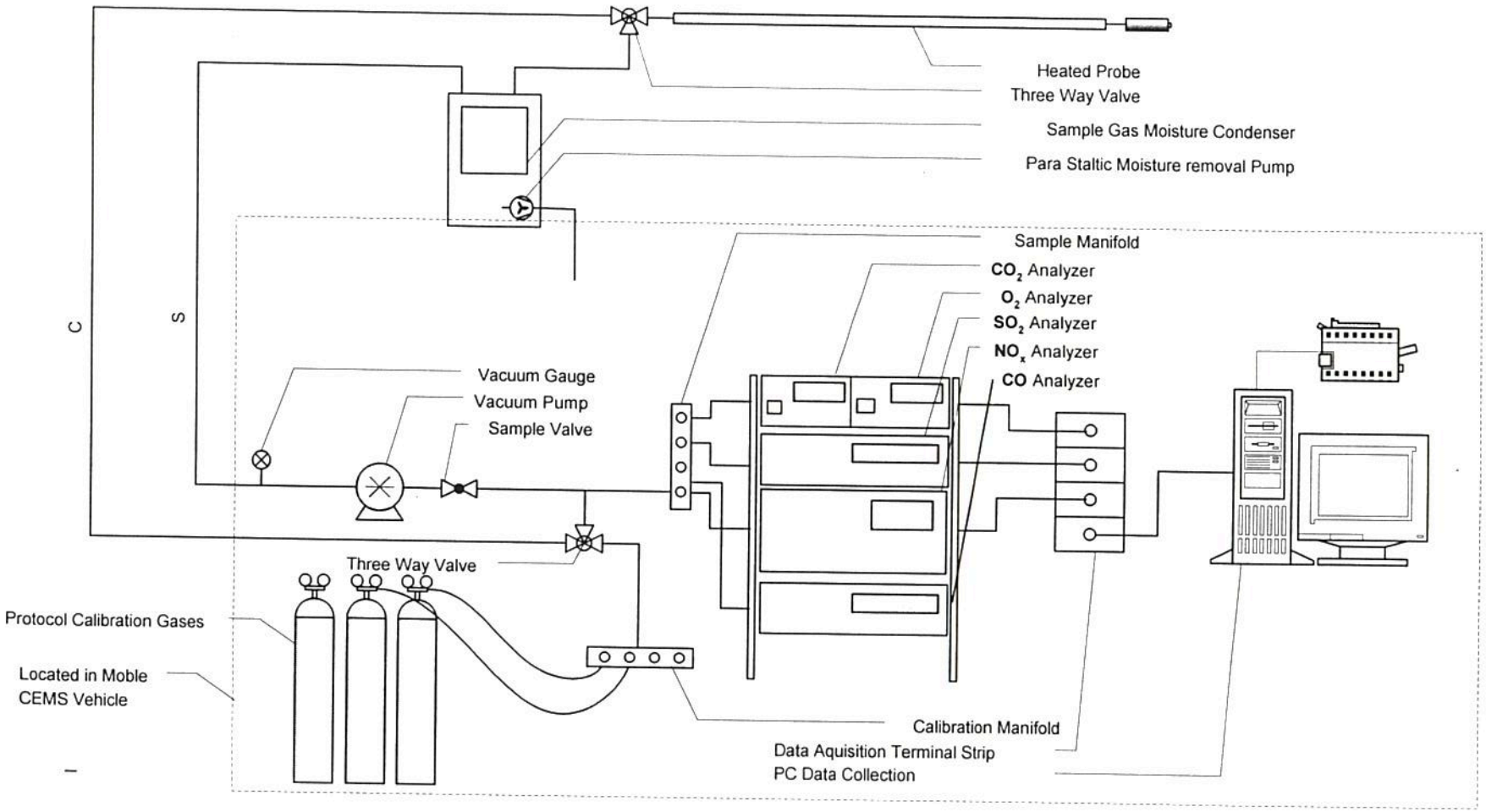

TITLE		
EPA INSTRUMENTAL SAMPLE TRAIN		
DESCRIPTION: SAMPLE TRAIN SCHEMATIC		DATE: 01-26-98
SCALE: NONE	DRAWN BY: RF COBB	REVISED: