United States
Environmental Protection
Agency

Effluent Guidelines Division
WH-552
Washington, DC 20460

EPA 440/1-79/070
December 1979

Water and Waste Management

EPA

Development Draft Document for Proposed Effluent Limitations Guidelines and Standards for the

Shipbuilding and Repair

Point Source Category

SEATAC_WOECK024723

DEVELOPMENT DOCUMENT
FOR
PROPOSED BEST MANAGEMENT PRACTICES

for the

SHIPBUILDING AND REPAIR INDUSTRY:
DRYDOCKS
POINT SOURCE CATEGORY

DRAFT

Douglas M. Costle
Administrator

Swep T. Davis
Acting Assistant Administrator
for Water and Hazardous Materials

Albert J. Erickson
Acting Deputy Assistant Administrator
for Water Planning and Standards

Robert B. Schaffer
Director, Effluent Guidelines Division

Ernst P. Hall, P.E.
Chief, Metals & Machinery Branch

John Penn Whitescarver
Project Officer

December, 1979

Effluent Guidelines Division
Office of Water and Hazardous Materials
U.S. Environmental Protection Agency
Washington, D.C. 20460

SEATAC_WOECK024724

ABSTRACT

This document presents the findings of an extensive study of the shipbuilding and repair industry. Its purpose is to provide specific guidance for the development of discharge permits to be issued under the authority of Section 402 of the Federal Water Pollution Control Act as amended. These permits are issued by state and federal authorities participating in the National Pollutant Discharge Elimination System (NPDES).

The studies conducted by the Environmental Protection Agency (EPA) determined that the imposition of national industry-wide numerical limitations and standards is impractical at this time. This document, therefore, provides guidance which recommends specific best management practices. Such management practices should be tailored to specific facilities. This determination shall in no way restrict the use of numerical limitations in NPDES permits.

The best management practices identified in this document shall be guidance for the determination of best practicable control technology currently available, best available control technology economically achievable, and best available demonstrated control technology. Supporting data and rationale are contained in this document.

SEATAC_WOECK024725

TABLE OF CONTENTS

Section	Title	Page
I	CONCLUSIONS	1
II	RECOMMENDATIONS	5
	BEST MANAGEMENT PRACTICES (BMP)	5
III	INDUSTRY CHARACTERIZATION	9
	BACKGROUND - THE CLEAN WATER ACT	10
	SUMMARY OF METHODS USED FOR DETERMINING THE PRACTICALITY OF EFFLUENT LIMITATIONS GUIDELINES AND STANDARDS OF PERFORMANCE	11
	GENERAL DESCRIPTION OF INDUSTRY	14
IV	INDUSTRY CATEGORIZATION	39
	INTRODUCTION	39
	INDUSTRY SUBCATEGORIZATION	39
	FACTORS CONSIDERED	39
V	WATER USE AND WASTE CHARACTERIZATION	41
	INTRODUCTION	41
	SPECIFIC WATER USES	44
	PROCESS WASTE CHARACTERIZATION	47
	QUANTITATIVE DATA	51
VI	SELECTION OF POLLUTION PARAMETERS	67
	INTRODUCTION	67
	RATIONALE FOR THE SELECTION OF POLLUTION PARAMETERS	69
	RATIONALE FOR REJECTION OF POLLUTION PARAMETERS	78
VII	TREATMENT AND CONTROL TECHNOLOGY	81

SEATAC_WOECK024726

	INTRODUCTION	81
	BEST MANAGEMENT PRACTICES	83
	CURRENT TREATMENT AND CONTROL TECHNOLOGIES	85
	CONTROL AND TREATMENT OF WASTEWATER FLOWS	93
	TREATMENT AND CONTROL TECHNOLOGIES UNDER DEVELOPMENT OR NOT IN COMMON USE	94
	NON-WATER QUALITY ENVIRONMENTAL ASPECTS	98
VIII	COST OF TREATMENT AND CONTROL TECHNOLOGY	103
	INTRODUCTION	103
	IDENTIFICATION OF METHODOLOGY CURRENTLY USED IN BEST MANAGEMENT PRACTICES	104
	UNIT COSTS OF BEST MANAGEMENT PRACTICES	105
	COSTS ATTRIBUTED TO BEST MANAGEMENT PRACTICES vs ENVIRONMENTAL COSTS	116
IX	ACKNOWLEDGEMENTS	119
X	REFERENCE AND BIBLIOGRAPHY	121
	REFERENCES	121
	BIBLIOGRAPHY	123
XI	GLOSSARY	129

SEATAC_WOECK024727

LIST OF FIGURES

Number	Title	Page
III-1	Typical Graving Dock	16
III-2	Typical Transverse Section of a Floating Drydock	19
III-3	Typical Inside and Outside Water Levels for Complete Docking Cycle of Floating Drydock	21
V-1	Major Flows Associated with Drydocked Vessel	42

SEATAC_WOECK024728

LIST OF TABLES

Number	Title	Page
III-1	Summary of Shipyard Information Acquisition Program	13
III-2	Abrasive Blasting	24
III-3	Constituents of Abrasive Blast Material at Naval Shipyards	27
III-4	Compositions of Formula Paints	28
III-5	Compositions of Organotin Antifouling Paints	30
III-6	Location Factors	32
III-7	Utilization of Drydocking Facilities	35
III-8	Graving Dock Lengths and Water Volumes	37
V-1	Water and Wastewater Practices, Shipyards A through G	43
V-2	Summary of NDPES Monitoring at Shipyard A - August 1975 through September 1975	54
V-3	Summary of Shipyard Test Results of EPA/Shipyard Monitoring at GD #B-3 at Shipyard B - May 1974	55
V-4	Summary of EPA Testing of EPA/Shipyard Monitoring of GD #B-3 at Shipyard B - May 1974	56
V-5	Summary of NPDES Monitoring of Drainage Discharge of Shipyard B - February 1975 Through February 1976	57
V-6	Summary of Contractor's Monitoring at Shipyard B - April 1976	58
V-7	Summary of All Monitoring at Shipyard B	59

SEATAC_WOECK024729

V-8	Summary of NPDES Monitoring of Drainage Discharges at Shipyard D - January 1975 through December 1975	60
V-9	Summary of Contractor's Monitoring of GD #D-3 Shipyard D - May 1976	61
V-10	Summary of All Harbor and Drainage Discharge Monitoring at Shipyard D	62
V-11	Grain-Size Analysis of Unspent Grit (Sample 1)	65
V-12	Grain-Size Analysis of Spent Grit and Spent Paint (Sample 2)	66
VI-1	Materials Originating from Drydocks which May be Discharged to Waterways	68
VI-2	Parameters Which May Be Present In Wastewater Discharges From Drydocks	69
VI-3	Pollution Parameters	71
VI-4	Parameters Rejected as Pollution Parameters	79
VII-1	Water Quality Treatment and Control Technologies Currently Being Used In Drydocks	86
VII-2	Water Quality Treatment and Control Technologies Under Development or Not Being Used in Drydocks	87
VII-3	Reported Application of the Treatment and Control Technologies	88
VIII-1	Unit Costs of Selected Operations Which May Be Used in Best Management Practices	107
VIII-2	Cost of Disposal of Solid Waste Removed From Docks (Includes Hauling and Landfill Fees)	108

SEATAC_WOECK024730

SECTION I

CONCLUSIONS

An engineering evaluation of graving dock and floating drydock operations was conducted to determine potential for generation of pollutants from shipbuilding and repair operations. The practicability of establishing numerical effluent guidelines was evaluated. Current techniques employed by shipyards were evaluated with respect to practices which reduce constituent levels in discharges and with respect to variations in repair practices within the industry.

The conduct of the work involved contacts with thirty-eight shipyards, engineering visits with data collection in seven shipyards, and sampling during ship repair operations in two shipyards. Additionally, prior work conducted by the EPA, discharge data collected in response to NPDES discharge permit monitoring, and relevant literature prepared by the EPA, Navy, and private shipyards were evaluated.

This industry is such that numerical effluent limitations are impractical and difficult to apply in a manner which could be monitored; therefore, guidance is provided for controlling wastewater pollutant discharges which require that best management requirements be applied.

The quality of the water discharged from drydocks is highly dependent upon the process used for removal of paint, rust, and marine growths from the metal surfaces of ship hulls. These materials are found mixed in the spent blasting material. Rust and marine growth removed from the sides of the ship may increase quantities of solids in the waste stream.

Spent paint contains compounds of copper, zinc, chromium, tin and lead, as well as organotin compounds (References 5, 6, 8, and 15). Copper, Zinc, chromium, and lead have been identified as priority pollutants and as such, their discharge must be subject to control. The paint contributes to the solid load in the waste stream as well as coming in contact with stormwater, flooding waters, hosewater, and water spills. Additionally, it can be washed, pushed, or blown into uncovered drains or shore waters.

Antifouling paints are of particular concern. Toxic constituents, such as copper or organotin compounds are used in these paint formulations. Of special concern are the new organotin antifouling paints due to irritant and toxic effects of the paint.

SEATAC_WOECK024731

The evaluation of literature, observations, and data leads to the following conclusions:

1. Segregation of water, except rainwater, from debris on drydock decks and removal of debris, spent paint and abrasive are the two most practical methods for reducing discharge of solids and wastewater.

2. Yards servicing freshwater vessels generally do not use abrasive blasting in preparing the hull for painting; therefore, some recommendations have been identified to be deleted for yards not using abrasive blasting.

3. Existing floating drydocks cannot be effectively monitored by normal sampling procedures because water drains from a rising dock through many scuppers, the ends, between pontoons, and through other openings.

4. On the basis of available sampling data, the type and the degree of activity occurring in the yards do not relate consistently to levels of pollutant constituents present in the wastewater.

5. Innovations such as closed-cycle blasting and vacuum equipment are currently in the development stage and show promise for increased productivity, reduction in airborne particulates, improved working conditions, and reduced abrasive blasting debris accumulations in drydocks.

6. Clean-up practices appear to enhance productivity by improving working conditions and allowing workers greater access to work areas.

7. Current regulations governing oil and grease spills are applicable to floating drydock and graving dock operations during flooding and deflooding.

The above conclusions are based upon data obtained during sampling at two facilities and similar data from other sources. Due to the nature of the facilities, sampling techniques are difficult to employ and estimates of the pollutant load had to take into account the processes occurring and the material balance. A complete material balance on the abrasive and spent blasting debris was considered and rejected because of inherent inaccuracies. Such factors as the unknown quantity of marine growth present on the hull, the unknown amount of paint to be removed, and uncontrollable introduction of rainwater and leakage into the abrasive blasting debris contribute to these inaccuracies. Further, dispersion of the material in the dock and possible inclusion of other forms of debris (for example, sediment and

SEATAC_WOECK024732

marine organisms which enter during flooding and when the caissons are open) compound the problems associated with a material balance.

Shipyard practices strongly influence the amount of waste produced. Yards servicing only freshwater vessels produce no spent antifouling paints since antifoulants are not used on freshwater vessels. Freshwater vessels are rarely subjected to abrasive blasting and thus the spent primer paint and abrasive are not produced.

Shipyards servicing commercial oceangoing vessels remove paint, both antifouling and anticorrosive, to varying degrees depending on the desires of the vessel owner (Reference 5). Naval vessels are customarily stripped of paint to bare metal, whereas commercial vessels are stripped to bare metal only occasionally and more frequently only lightly sand blasted to prepare the surface to receive a coating of paint. Spent antifouling paint thus occurs in shipyards in different quantities.

Graving docks are subject to inflows of water which are not encountered with floating drydocks. Groundwater and gate leakage are the two major sources. Rainfall varies with climate but constitutes a third source. These inflows must be pumped from graving docks while rainfall can run off floating drydocks.

Leachability of spent paint is still an unresolved question. Primers containing lead oxide and zinc chromate do not appear to pose a leaching problem. Antifouling paints containing copper oxide may be leachable under some conditions, but factors such as amount of active material remaining, water pH, water temperature, water hardness, particle size, and contact time would appear to influence the amount of leaching if it occurs (References 5, 16, 17). Organotin paints may present hazards to workers during dry abrasive blasting. These paints are relatively new and little experience has been accumulated with them. Major unknowns with organotin paints are those of the extent of emission of tributyl-tin-oxide or tributyl-tin-fluoride (toxicants), the conversion of the organotin compounds to inorganic tin, and again, the actual leachability of the material. Formulations are prepared in differing concentrations depending upon the owners' specifications and the expected life of the protective coating.

Finally, it is concluded that a number of management practices are used at some yards which can be adapted to the needs of other yards. All facilities practice some degree of clean up at various times, although this may consist only of moving debris out of the work area when accumulations interfere with operations. During the docking period, some facilities use extensive clean-up procedures. In general drydock clean up is directed toward improving productivity and safety and toward maintaining acceptable working conditions. Both mechanical

SEATAC_WOECK024733

and manual methods are in use. Control of water flows within the dock, like clean-up procedures, vary with each facility.

SEATAC_WOECK024734

SECTION II

RECOMMENDATIONS

Based on the results of various studies, it is concluded that numerical effluent guidelines should not be established at this time because the nature of the discharge is not conducive to numerical monitoring.

On the basis of practices observed in and reported by various shipyards, Best Management Practices (BMP) have been developed for general application, and should be considered as guidance in lieu of numerical limitations. These are recommended for shipyard implementation by each individual facility in a manner best suited to the particular needs and conditions prevailing. The magnitude of the problem, equipment needed, physical drydock factors, scheduling, etc., should be considered in developing a plan to abate pollution.

The following specific requirements shall be incorporated in NPDES permits and are to be used as guidance in the development of a specific facility plan. Best Management Practices (BMP) numbered 2, 5, 7 and 10 should be considered on a case-by-case basis for yards in which wet blasting to remove paint or dry abrasive blasting do not occur, and BMP 10 does not apply to floating drydocks.

BEST MANAGEMENT PRACTICES (BMP)

BMP 1. Control of Large Solid Materials. Scrap metal, wood and plastic, miscellaneous trash such as paper and glass, industrial scrap and waste such as insulation, welding rods, packaging, etc., shall be removed from the drydock floor prior to flooding or sinking.

BMP 2. Control of Blasting Debris. Clean-up of spent paint and abrasive shall be undertaken as part of the repair or production activities to the degree technically feasible to prevent its entry into drainage systems. Mechanical clean-up may be accomplished by mechanical sweepers, front loaders, or innovative equipment. Manual methods include the use of shovels and brooms. Innovations and procedures which improve the effectiveness of clean-up operations shall be adapted, where they can be demonstrated as preventing the discharge of solids. Those portions of the drydock floor which are reasonably accessible shall be "scraped or broomed clean" (see Glossary) of spent abrasive prior to flooding.

After a vessel has been removed from the drydock and the dock has been deflooded for repositioning of the keel and

SEATAC_WOECK024735

bilge blocks, the remaining areas of the floor which were previously inaccessible shall be cleaned by scraping or broom cleaning prior to the introduction of another vessel into the drydock. The requirement to clean the previously inaccessible area shall be waived either in an emergency situations or when another vessel is ready to be introduced into the drydock within fifteen (15) hours. Where tides are not a factor, this time shall be eight (8) hours.

BMP 3. Oil, Grease, and Fuel Spills. During the drydocked period oil, grease, or fuel spills shall be prevented from reaching drainage systems and from discharge with drainage water. Cleanup shall be carried out promptly after an oil or grease spill is detected.

BMP 4. Paint and Solvent Spills. Paint and solvent spills shall be treated as oil spills and segregated from discharge water. Spills shall be contained until clean-up is complete. Mixing of paint shall be carried out in locations and under conditions such that spills shall be prevented from entering drainage systems and discharging with the drainage water.

BMP 5. Abrasive Blasting Debris (Graving Docks). Abrasive blasting debris in graving docks shall be prevented from discharge with drainage water. Such blasting debris as deposits in drainage channels shall be removed promptly and as completely as is feasible. In some cases, covers can be placed over drainage channels, trenches, and other drains in graving docks to prevent entry of abrasive blasting debris.

The various process wastewater streams shall be segregated from sanitary wastes. Gate and hydrostatic leakage may also require segregation.

BMP 6. Segregation of Waste Water Flows in Drydocks. The various process wastewater streams shall be segregated from sanitary wastes. Gate and hydrostatic leakage may also require segregation.

BMP 7. Contact Between Water and Debris. Shipboard cooling and process water shall be directed so as to minimize contact with spent abrasive and paint and other debris. Contact of spent abrasive and paint by water can be reduced by proper segregation and control of wastewater streams. When debris is present, hosing of the dock should be minimized. When hosing is used as a removal method, appropriate methods should be incorporated to prevent accumulation of debris in drainage systems and to promptly remove it from such systems to prevent its discharge with wastewater.

SEATAC_WOECK024736

BMP 8. Maintenance of Gate Seals and Closure. Leakage through the gate shall be minimized by repair and maintenance of the sealing surfaces and proper seating of the gate. Appropriate channelling of leakage water to the drainage system should be accomplished in a manner that reduces contact with debris.

BMP 9. Maintenance of Hoses, Soil Chutes, and Piping. Leaking connections, valves, pipes, hoses, and soil chutes carrying either water or wastewater shall be replaced or repaired immediately. Soil chute and hose connections to the vessel and to receiving lines or containers shall be positive and as leak free as practicable.

BMP 10. Water Blasting, Hydroblasting, and Water-Cone Abrasive Blasting (Graving Docks). When water blasting, hydroblasting, or water-cone blasting is used in graving docks to remove paint from surfaces, the resulting water and debris shall be collected in a sump or other suitable device. This mixture then will be either delivered to appropriate containers for removal and disposal or subjected to treatment to concentrate the solids for proper disposal and prepare the water for reuse or discharge.

SEATAC_WOECK024737

SECTION III

INDUSTRY CHARACTERIZATION

Shipbuilding and repair operations have been identified by EPA as a division of the ship construction industry requiring consideration of point source discharges which may require effluent limitation guidelines. Specifically, graving docks and floating drydocks were evaluated with respect to the potential contamination of receiving waters by wastes generated by ship repair and discharged during flooding of graving docks, immersion of floating drydocks, or with drainage water and runoff.

An engineering evaluation of graving dock and floating drydock operations was conducted to determine potential for generation of wastes from shipbuilding and repair operations in graving and floating drydocks. The practicality of establishing numerical effluent limitation guidelines was evaluated for drydocks. The evaluation was accomplished by:

- Literature Pesearch
- Contacting and visiting shipyards
- Observing ship repair operations and the applications of methods designed to reduce or eliminate pollutional constituents in effluents
- Sampling and analyzing discharge constituents
- Determining the feasibility of monitoring and sampling of waste discharges from graving docks and floating drydocks
- Evaluating the technology being utilized to treat or control pollutant discharges, and determining what applicable technology may be applied to minimize the discharge of pollutants to receiving waters

There are eighty-four shipyards in the United States that utilize graving and floating drydocks. Among the shipyards are sixty-eight graving docks and 151 floating drydocks. In the conduct of the work, thirty-eight shipyards were contacted on the Atlantic Coast, Gulf Coast, Great Lakes and Inland Waterways, and Pacific Coast to determine which of the major shipyards are involved in minimizing pollutant discharges by utilizing specific control methods. Seven shipyards, referred to in the text by letters A through G, were visited to observe operations and record data. Samples were taken from the discharges from graving docks of two of these seven

SEATAC_WOECK024738

shipyards, shipyards B and D. The samples were analyzed and the constituent levels were evaluated with respect to the ship repair operations being performed and the discharge control methods utilized. The analyses were combined with other engineering data to establish the degree of pollutant discharges, to define the nature of discharges from ship repair operations, and to recommend effluent limitation guidelines if practicable or alternatives to guidelines if necessary.

BACKGROUND - The Clean Water Act

The Federal Water Pollution Control Act Amendments of 1972 established a comprehensive program to "restore and maintain the chemical, physical, and biological integrity of the Nation's waters." Section 101(a). By July 1, 1977, existing industrial dischargers were required to achieve "effluent limitations requiring the application of the best practicable control technology currently available" ("BPT"), Section 301(b)(1)(A); and by July 1, 1983, these dischargers were required to achieve "effluent limitations requiring the application of the best available technology economically achievable ... which will result in reasonable further progress toward the national goal of eliminating the discharge of all pollutants" ("BAT"), Section 301(b)(2)(A). New industrial direct dischargers were required to comply with Section 306 new source performance standards ("NSPS"), based on best available demonstrated technology; and new and existing dischargers to publicly owned treatment works ("POTWs") were subject to pretreatment standards under Sections 307(b) and (c) of the Act. While the requirements for direct dischargers were to be incorporated into National Pollutant Discharge Elimination System (NPDES) permits issued under Section 402 of the Act, pretreatment standards were made enforceable directly against dischargers to POTWs (indirect dischargers).

Although Section 402(a)(1) of the 1972 Act authorized the setting of requirements for direct dischargers on a case-by-case basis, Congress intended that, for the most part, control requirements would be based on regulations promulgated by the Administrator of EPA. Section 304(b) of the Act required the Administrator to promulgate regulations providing guidelines for effluent limitations setting forth the degree of effluent reduction attainable through the application of BPT and BAT. Moreover, Sections 304(c) and 306 of the Act required promulgation of regulations for NSPS, and Sections 304(f), 307(b), and 307(c) required promulgation of regulations for pretreatment standards. In addition to these regulations for designated industry categories, Section 307(a) of the Act required the Administrator to promulgate effluent standards applicable to all dischargers of toxic pollutants. Finally, Section 501(a) of the Act authorized the Administrator to prescribe any additional regulations "necessary to carry out his functions" under the Act.

SEATAC_WOECK024739

EPA was unable to promulgate many of these regulations by the dates contained in the Act. In 1976, EPA was sued by several environmental groups, and insettlement of this lawsuit EPA and the plaintiffs executed a "Settlement Agreement", which was approved by the Court. This Agreement required EPA to develop a program and adhere to a schedule for promulgating for 21 major industries BAT effluent limitations guidelines, pretreatment standards, and new source performance standards for 65 "priority" pollutants and classes of pollutants. See Natural Resources Defense Council, Inc. v. Train, 8 ERC 2120 (D.D.C. 1976), modified March 9, 1979.

On December 27, 1977, the President signed into law the Clean Water Act of 1977. Although this law makes several important changes in the Federal water pollution control program, its most significant feature is its incorporation into the Act of several of the basic elements of the Settlement Agreement program for toxic pollution control. Sections 301(b)(2)(A) and 301(b)(2)(C) of the Act now require the achievement by July 1, 1984, of effluent limitations requiring application of BAT for "toxic" pollutants, including the 65 "priority" pollutants and classes of pollutants which Congress declared "toxic" under Section 307(a) of the Act. Likewise, EPA's programs for new source performance standards and pretreatment standards are now aimed principally at toxic pollutant controls. Moreover, to strengthen the toxics control program, Congress added Section 304(e) to the Act, authorizing the Administrator to prescribe "best management practices" ("BMPs") to prevent the release of toxic and hazardous pollutants from plant site runoff, spillage or leaks, sludge or waste disposal, and drainage from raw material storage associated with, or ancillary to, the manufacturing or treatment process.

In keeping with its emphasis on toxic pollutants, the Clean Water Act of 1977 also revised the control program for non-toxic pollutants. Instead of BAT for "conventional" pollutants identified under Section 304(a)(4) (including biological oxygen demand, suspended solids, fecal coliform and pH), the new Section 301(b)(2)(E) requires achievement by July 1, 1984, of "effluent limitations requiring the application of the best conventional pollutant control technology" ("BCT"). The factors considered in assessing BCT for an industry include the costs of attaining a reduction in effluents and the effluent reduction benefits derived compared to the costs and effluent reduction benefits from the discharge of publicly owned treatment works (Section 304(b)(4)(B)). For non-toxic, nonconventional pollutants, Sections 301(b)(2)(A) and (b)(2)(F) require achievement of BAT effluent limitations within three years after their establishment or July 1, 1984, whichever is later, but not later than July 1, 1987.

SEATAC_WOECK024740

SUMMARY OF METHODS USED FOR DETERMINING THE PRACTICALITY OF EFFLUENT LIMITATIONS GUIDELINES AND STANDARDS OF PERFORMANCE

The recommendations and standards of performance proposed herein have been developed in the following manner.

Industry and Waste Load Categorization

The industry was first studied to determine whether or not separate limitations and standards would be required for different divisions within the category. Factors considered included the nature of the physical facilities involved, the types of activities performed, processes within each activity, and materials used.

Raw waste characteristics were then identified. This included analyses of (1) the sources and volumes of water required in each process, (2) non-process related sources of wastes and wastewaters, and (3) the components potentially present in wastewaters.

Wastewaters originating from the vessel in drydock included sanitary wastes and cooling water. (Sanitary wastes are not included in the scope of this document). Dock originating wastewaters were identified as gate and dock leakage, rainfall, water from occasional wet blasting operations, and water used in flooding the drydock for docking and undocking of the vessels.

The major concern with respect to potential pollution problems was identified as spent paint and abrasive blasting material. Hull cleaning practices were found to vary within each yard contacted, and the magnitude of this potential problem likewise varies.

Recommendations for reducing or eliminating potential environmental hazards have been based upon information obtained in the course of this effort, prior work performed by other organizations, and literature available as reference material.

Treatment and Control Technologies

The range of control and treatment technologies within the industry was identified. Included were both treatment technology and operating practices. Applicability and reliability of each treatment and control technology were investigated, as was the required time for implementation. In addition, environmental impacts of such technologies upon other pollution problems, such as air and solid waste, were identified.

SEATAC_WOECK024741

Data Base

Engineering data was obtained from a number of sources including EPA and U.S. Navy research information, EPA, Navy and State environmental personnel, trade associations, published literature, qualified technical consultations, and historical information on effluent quality and quantity. In addition, on-site engineering visits and analytical programs were conducted at specific shipyards and other shipyards were contacted for information. Table III-1 describes the extent of this shipyard information acquisition program. NPDES permits and water pollution control plans for these facilities were reviewed. Results of monitoring required under the permits were of value when samples were taken at outfalls directly related to drydock operation.

Table III-1

SUMMARY OF SHIPYARD INFORMATION ACQUISITION PROGRAM

Category	Total in Category No. of Docks (No. of Shipyards)	Contacted No. of Docks (No. of Shipyards)	Visited No. of Docks (No. of Shipyards)
Graving Docks			
East Coast	39 (14)	15 (6)	5 (2)
Great Lakes	8 (5)	8 (5)	2 (1)
Gulf Coast	3 (3)	0 (0)	0 (0)
West Coast	18 (5)	12 (4)	4 (2)
Total	68 (27)	35 (15)	11 (5)
Floating Drydocks			
East Coast	58 (21)	29 (8)	3 (1)
Great Lakes	7 (3)	7 (3)	0 (0)
Gulf Coast	36 (21)	13 (6)	2 (1)
West Coast	50 (23)	30 (11)	4 (2)
Total	151 (68)	79 (28)	9 (4)

Previous work has been performed by others in an effort to characterize and limit discharges from shipyard activities. One such study by Hamilton Standard Division of United Technologies, Inc., recommended clean-up techniques rather than effluent limitations (Reference 1).

SEATAC_WOECK024742

Other studies have been performed in an effort to facilitate issuance of NPDES permits. The EPA Office of Enforcement, Denver, Colorado conducted studies of San Diego and Newport News harbors. On the basis of its findings, housekeeping measures were recommended, primarily to prevent contact between water and spent abrasive and paint blasted from the vessels (Reference 2).

Various leaching studies have been performed to determine whether or not spent paint and abrasive are leachable. Section V discusses the results of these studies. These previous efforts have been considered in the current work.

Cost information was obtained directly from industry during shipyard visits, from engineering firms, equipment suppliers, and from the literature. These costs have been used to develop general capital, operating, and total costs for each treatment and control method. This generalized cost data was used to estimate the costs of Best Management Practices in Section VIII.

Selection of Facilities

From the total population of drydocking facilities thirty-eight were contacted by telephone to obtain information on practices and operations, seven were visited by project personnel, and of the latter group two were selected for sampling of wastewater during operations.

Shipyards contacted by telephone were located in all geographic areas of the continental United States. Visits were conducted to yards located on the East, West, and Gulf Coasts, and on the Great Lakes. Sampling was conducted on the East and West Coasts.

GENERAL DESCRIPTION OF INDUSTRY

Activities Carried Out At Shipyard Facilities

The shipbuilding and repair industry is engaged in building, conversion, alteration, and repair of all types of ships, barges, and lighters. These activities encompass a broad range of functions, such as: erection of structural steel frameworks and fastening steel plates to the framework to form a hull; application of paint systems to hull; installation of a variety of mechanical, electrical, and hydraulic equipment within the structure; repair of damaged vessels; replacement of expended or failed paint systems; and restoration of malfunctioning equipment and systems to operational condition. Typical of the trade skills involved in this industry are: shipfitters; metalsmiths; welders and burners; machinists; electricians and electronic technicians; pipefitters and coppersmiths; carpenters, joiners and patternmakers; painters; riggers and laborers; blacksmiths; boilermakers; and foundrymen. Not all of the listed activities,

SEATAC_WOECK024743

functions, or trade skills are utilized at every facility. Some of the functions require placing the ship into drydock, e.g., replacing underwater paint systems. Only those facilities providing drydocking capabilities are covered in this document.

Graving Dock Description

Graving docks are constructed with sides and a bottom and with a gate at the water end. The bottom is located below the adjacent water surface level with sufficient depth to allow floating of a vessel into the dock. Operations consist of positioning keel blocks on the bottom of the dock to match the keel surface of the ship, flooding the dock by opening valves, opening the gates, positioning the vessel over the keel blocks, closing the gates, and pumping the water out of the graving dock. During maintenance operations, the graving dock is kept dry by sump or stripping pumps which remove fluids and water by providing suction through drains located at low points in the dock. After completing operations on the vessel, the dock is flooded, the gates are opened, and the vessel is floated out of the dock. The gates to the graving dock are closed and the water is pumped out to make preparations for receiving another vessel, or, if identical vessels are being maintained, the next vessel is moved into the dock prior to removing the water.

Graving docks are usually constructed of concrete although they may occasionally be of timber or steel sheetpile cell construction. Figure III-1 illustrates typical cross section and plan views of a concrete graving dock and includes the designations of drydock features.

The preferred method of entrance closure is by floating caisson. Other available types of closure are: miter gates, flap gates, set-in-place gates, sliding caissons and rolling caissons. Floating caissons are watertight structures with flooding and dewatering systems for operation. For design of hull, floating stability, and all operational purposes, they are symmetrical both transversely and longitudinally. Miter gates were probably the first satisfactory mechanical gates. Each closure consists of a pair of gate leaves, hinged at the dock walls, swinging horizontally so that when closed, the free ends meet in fitted contact. Gates are moved by means of a hawser to a nearby power capstan. The sides and bottoms of the gates bear against seats in the drydock walls and floor. A flap gate is a rigid, one-piece gate hinged at its bottom, and swinging downward and outward. It is a compartmented structure with means for varying its bouyancy for raising and lowering. Set-in-place gates are in various forms, and may be built in one piece or multiple sections. They are of beam and plate construction, with reactions carried to the walls by girders and to the floor by beams. Sliding caissons and rolling caissons are built-in box shapes, mounted on hardwood sliding surfaces

SEATAC_WOECK024744

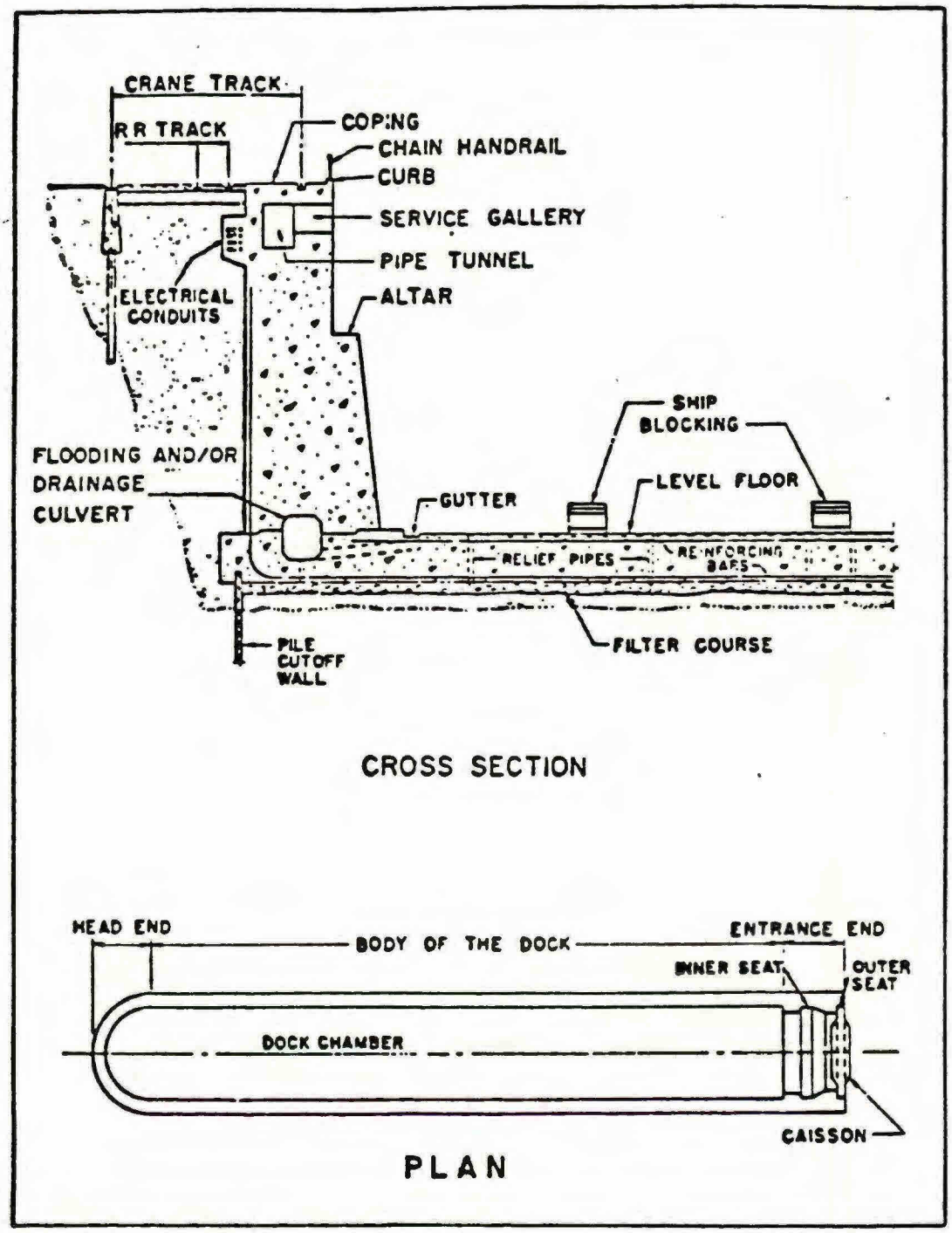

Figure III-1. Typical Graving Dock

SEATAC_WOECK024745

or metal rollers which move them into or out of place. They may be equipped with air chambers for bouyancy which reduce the work of moving.

There are three general methods used for admitting water into graving docks. These methods are: (1) through culverts built into the lower parts of sidewalls and connected to floor openings spaced along a dock length, (2) through culverts passing transversely under the floor near the entrance with openings leading upward into the floor, or (3) through ducts in an entrance closure caisson.

Graving docks have two dewatering systems. The collector channel, a wide, deep, grating covered open culvert leading to the pump suction chamber, handles the greater portion of water pumped out of the flooded graving dock. Installation of a settling basin may be justified because abrasive materials harmful to pumps and pump fittings may be washed off a graving dock floor into the pumping system where damage may result.

The main dewatering system of a drydock usually includes: (1) the suction inlet located within the dock chambers; (2) the suction passage and culvert; (3) pump suction chamber; (4) pump suction bells; (5) pumps; (6) discharge, check, and gate values; (7) discharge culvert including backwash trash rack; and (8) hinged stop gate. Where pumping plants are designed to remove water from more than one dock, additional sluice gates are required to permit independent pumping of the docks. At least two main dewatering pumps are usually required to achieve reasonable dewatering times.

A secondary system collects the last few inches of water blanketing the graving dock floor. This system has sloping longitudinal floor drain culverts near the sidewalls which lead to collector channels at pump wells. The culverts may have rectangular cross-sectional areas of several square feet. They are covered by securely anchored strong gratings. Drainage and sump pumps, of lesser capacity than the main dewatering pumps, are provided to remove seepage, precipitation, caisson and valve leakage, and wash water, and to clear the dewatering pump suction chamber and drainage system.

Ships in graving docks do not ordinarily fill all their own requirements for mechanical services essential for work, habitation, comfort, and protection. Some services, particularly those required for repairs and cleaning associated with the docking operations, must be supplied from dockside facilities. Such services include the delivery of steam, compressed air, water, systems for tank cleaning, and oxygen and acetylene or electricity for welding. Utility services are provided to ships in drydock by lines from service galleries located around the upper perimeter of the dock. The drydock also has a tank cleaning system. Means must be provided to keep a docked

SEATAC_WOECK024746

vessel far enough above the floor to permit work on its keel, giving proper allowance for removal or installation of sonar domes, rudders, propellers, and similar parts. Blocking arrangements are laid out in the dock in accordance with the docking plan for each individual vessel. Keel blocks are placed under the longitudinal centerline keel of the vessel. Bilge or side blocks are located according to dimensions indicated in the table of offsets on the vessel's docking plan. In some cases, block slides are built into the dock itself. In addition, such supporting facilities as industrial shops, transportation facilities, weight and materials handling equipment, personnel and storage facilities are normally located in close proximity to drydocks.

Floating Drydock Description

As implied by its name, a floating drydock floats on the water with the bottom of the drydocked vessel above the water surface. The floating drydock is a non-self-propelled mobile structure. The floating drydock consists of a platform and associated ballast tanks used to raise ships above the water level for work which requires exposure of the entire hull. Ballast tanks are flooded and the dock platform is submerged to a predetermined level beneath the water's surface. A ship is then moved over the dock and positioned over preset keel and bilge blocks on the floor of the dock platform. This position is maintained as the ballast tanks are dewatered. Dewatering the ballast tanks lifts the ship and drydock platform floor above the surface of the water (Reference 4).

The following discussion of the sinking and refloating procedures along with a schematic representation of the action is quoted from Appendix A of Reference 4.

> "Many different types of floating drydocks have been developed. The specific characteristics of the various types differ considerably as a consequence of the different requirements dictated from considerations of technical, operational, or strategic nature. However, the basic general features and the related terminology are, more or less, the same for all types of docks.
>
> 'Figure III-2 illustrates the various parts of a typical floating drydock. The nomenclature used in the figure is standard.
>
> 'The lower, horizontal portion of a U-shaped trough which forms the dock structure is called the pontoon. The top of the pontoon, the pontoon deck, forms a platform on which are three or more rows of blocks which support a ship when docked. The pontoon constitutes the main platform for the work to be performed on the docked ship. In order to increase the working

SEATAC_WOECK024747

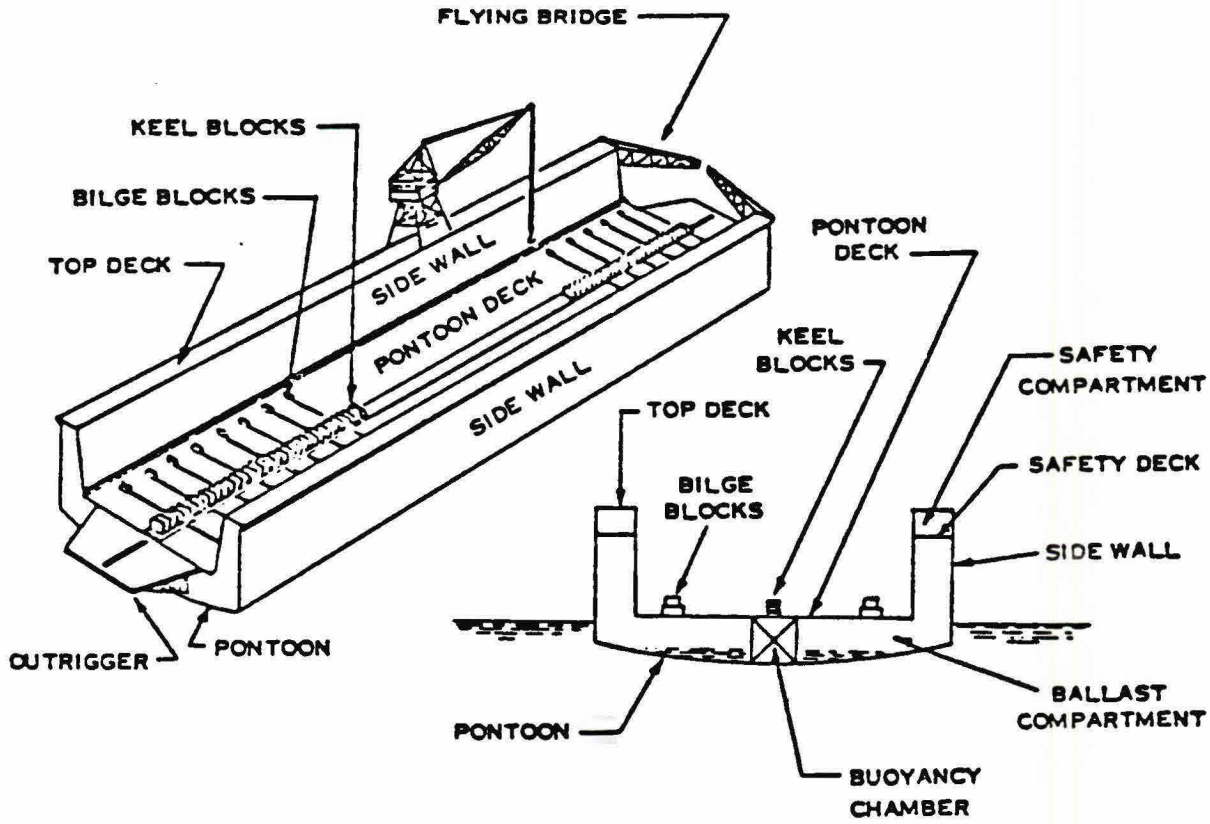

FIGURE III-2. Typical Transverse Section of a Floating Drydock

SEATAC_WOECK024748

platform, cantilevered extensions, outriggers, are fitted at the ends of the pontoon deck. The outriggers do not bear any part of the ship's weight, but are particularly convenient for setting up staging around the ends of a long ship.

'Above the two sides of the pontoon stand the side walls. The side walls extend vertically to form, with the pontoon, the U-shape of the dock trough. The top of the side walls is sufficiently high as to be afloat when the dock is submerged to receive the largest ship it is capable of docking. The side walls usually extend to the full length of the dock. The top deck of each side wall provides the necessary equipment and working space for handling the ship's docking lines. Gantry cranes required for handling material travel on tracks along the length of the top decks.

'Flying bridges are often installed at one or both ends of the top decks, to provide personnel passage between the top decks. They consist of hinged cantilever arms, which can be swung open to permit the ship to enter or leave the dock.

'Most of the space contained within the pontoon and side walls is utilized as ballast tanks. The admission of water to or its removal from these spaces creates the forces that cause the dock to submerge or rise. The remaining space consists of chambers which keep the dock afloat and their size determines the limit to which the dock will submerge when all ballast tanks are full. Spaces, termed buoyancy chambers in the pontoon and the safety compartments in the wing walls, serve this purpose. These buoyancy chambers, not being subject to flooding, may also be utilized to accommodate machinery, equipment, personnel quarters, mess rooms, workshops, and stowage spaces.

'The larger floating drydocks are sectionalized to facilitate movement overseas and to render them capable of self-docking. They can transit the Panama Canal.

'One type of floating drydock, the closed basin, ARD type, differs somewhat in design and operation from the other docks. The forward end of the dock is closed by a structure resembling the bow of a ship; the aft end is opened and closed by operation of a stern gate. Lift forces are provided by emptying the ballast tanks and by emptying the dock basin.

'Figure III-3 shows typical inside and outside water levels for a complete docking cycle."

SEATAC_WOECK024749

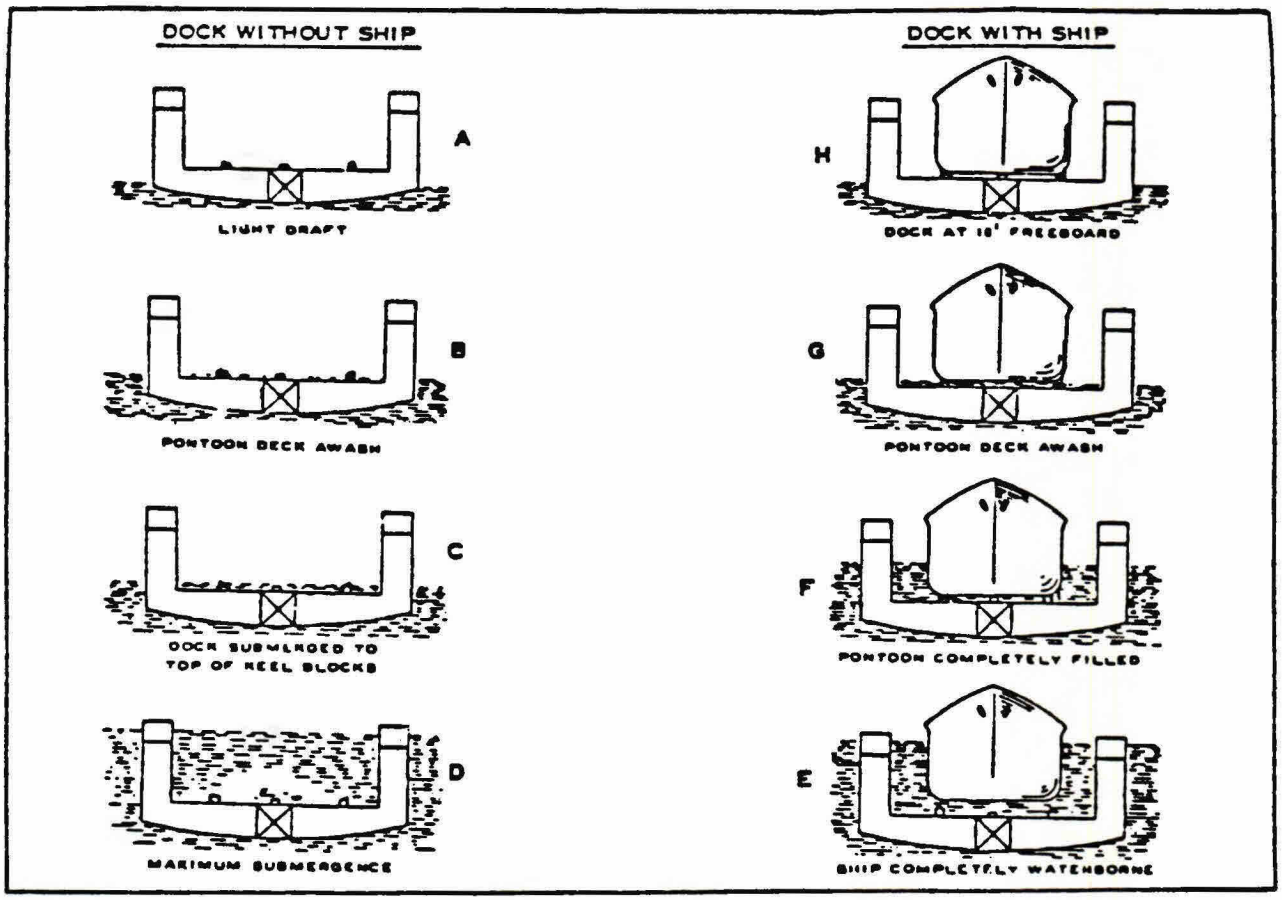

FIGURE III-3. Typical Inside and Outside Water Levels For Complete Docking Cycle of Floating Drydock

SEATAC_WOECK024750

Shipyard Practices

This section is limited to discussion of those operations normally or most frequently performed in drydock with full recognition that almost the entire range of activities listed in "Activities Carried Out at Shipyard Facilities" above are available and may on occasion be required. The basic functions of a drydock are the construction and repair of ships and the cleaning, and painting of ships' bottoms, propellers, rudders, and the external parts below the water line.

Drydocks provide access to the ship's bottom and utilities services to shipyard personnel. Drydocks supply gas, electricity, steam, compressed air, fresh water, and salt water to the ship in drydock from lines attached to or embedded in the drydock. Processes involved in drydocking include docking, undocking, tank cleaning, abrasive and chemical paint removal, painting and mechanical repair of various ships' parts. Mechanical repairs of machinery, welding, cutting of plates, and alterations of a ship's structure are other functions performed in drydock (Reference 5).

Tank cleaning operations remove dirt and sludges from fuel tanks and bilges on the ship. Workmen spray detergents, or hot water, into the emptied tanks by injecting cleaners into the steam supply hoses. Spent wash water in the tanks is pumped by Wheeler (TM) machines, which are combination pump and storage tank units, into tank trucks or barges for subsequent disposal (Reference 5).

The almost universally preferred method of preparing steel surfaces for application of a fresh paint system for saltwater immersion is dry abrasive blasting. For solely freshwater immersion, light hydroblasting (a water sweep) may be adequate to remove loose, flaking or non-adhering paint in preparation for refurbishing paint systems.

With the exception of the closed-cycle blast machines being currently being developed and evaluated, all blasting presently carried out within drydocks is done manually. Three manual blasting methods are used within drydocks, and the characteristics of the debris produced by each method are markedly different.

Dry abrasive blasting is a process by which the blasting abrasive is conveyed in a medium of high pressure air, through a nozzle, at velocities approaching 450 feet per second. This type of blasting produces the highest relative amount of dust, and resulting residues are dry. Dry blasting is used for virtually all tank interior work and extensively on exterior hull work (Reference 6).

The two other manual blasting methods are wet abrasive blasting in which water replaces air as the propellant and water cone blasting in

SEATAC_WOECK024751

which a spray of water surrounds the air driven abrasive streams (Reference 7).

Organotin antifouling paints may produce toxic dust if subjected to dry blasting. Thus, wet blasting techniques are used when removing these paints (Reference 6). Wet or slurry blasting is also used in cleaning special underwater equipment, such as resin-constructed sonar domes, to protect them from damage (Reference 8). Wet blasting procedures significantly reduce dust occurrence. A rust inhibitor may be added to the water or slurry to prevent rusting of surfaces before painting. Rust inhibitor solutions may vary but usually will be composed of diammonium phosphate and sodium nitrite along with the abrasive grit and water.

An abrasiveless method of blasting using jets of high pressure water, hydroblasting, has been demonstrated for some purposes. Generally, this will only remove surface debris and loose or flaking paint. By going to very high pressures, on the order of 10,000 psi, adhering paint can be removed to bare metal. Hydroblasting is rarely used in shipyard operations.

Blasting practices were found to vary widely between facilities. Many factors influence this, some of which are discussed later in this section. Table III-2 summarizes the blasting practices used in shipyards visited during the conduct of this study. Type of blasting, frequency of occurrence, amount of paint removal, and blasting medium are qualitatively indicated, as are the type and number of docking facilities.

SEATAC_WOECK024752

Table III-2

ABRASIVE BLASTING

Ship-yard	Facilities FD	GD	Type of Blasting	Frequency	Usual Amount of Paint Removal	Blasting Medium*
A	3	1	Dry	Usually	Usually to Bare Metal	Camel Black
B	0	5	Dry	Usually	Depends on Vessel, Sand Sweep to Bare Metal	Black Beauty
C	0	2	Dry	Rarely	None	NA
D	2	3	Dry, Also Closed Cycle	Usually	Usually to Bare Metal	Kleen Blast
E	0	1	Dry	Usually	Depends on Vessel	Kleen Blast
F	0	2	Dry	Rarely	Only for Repair Work	Black Beauty Campbell Black #2
G	2	0	Dry	Usually	Depends on Vessel, Never to Bare Metal	Sand Blast

*By trade name.
FD = Floating Drydock, GD = Graving Dock, NA = Not Applicable

SEATAC_WOECK024753

Of the seven facilities visited, none uses wet blasting routinely and only one indicated its use on rare occasions. Shipyard F uses abrasive blasting only in conjunction with repair work such as welding.

There are two techniques in use for dry abrasive blasting. The first, generally known as "sand sweep," is frequently used on commercial vessels to remove marine growth, fouling and delaminating coatings only in preparation for refurbishment or renewal of paint systems. The second, more frequently used on naval vessels, removes marine growth, fouling, and all paint down to "white metal" and abrades the metal substrate to provide a suitable surface for adherence of a complete fresh coating system.

The following procedure quoted from Reference 9, describes the entire cycle of abrasive blasting. It applies equally well to dry or wet abrasive blasting except for addition of water at the appropriate point in the cycle. It should be noted that the full cycle is not carried out at all shipyards - e.g., some facilities have the grit delivered to their site in the hoppers from which it flows into the pressure pot.

"<u>Procedure</u>

- Abrasive is delivered in large quantities as a free flowing material by covered railway hopper car or dump truck.

- Abrasive is transferred from shipping unit to storage areas by allowing abrasive to flow from shipping unit onto conveyer belts that dump it into forklift hoppers or directly into storage bins. Usually, abrasive storage will be covered by a permanent structure or temporary covers (canvas or plastic tarpaulin).

- When abrasive is required, large hoppers, in excess of 6-ton capacity, are loaded by scoop tractor or vacuum loaders. When full, these hoppers are transferred to the job site by forklift truck.

- Abrasive from these hoppers is transferred into the pressure pots, usually by gravity feed.

- Finally, the abrasive is propelled from the sandblast nozzle by compressed air to forcibly impinge on the surface being cleaned.

- Spent abrasive, paint particles, fouling organisms, and other debris fall to the drydock floor.

SEATAC_WOECK024754

- The debris from the sandblast operations is picked up by scoop tractors, hand shovels, and/or other method for transfer to hoppers or skip boxes.

- In some shipyards, spent metallic abrasive is reclaimed and reused, but abrasive contaminated with antifouling paint is discarded in designated landfill areas."

The abrasive may be either metallic or nonmetallic. Practically all blasting is done with certain by-product mineral abrasives which are low in free silica content. The specification (Reference 10) used by naval shipyards purchasing grit allows a maximum of 5 percent free silica content. The constituents of abrasive blast materials currently in use by U.S. Naval Shipyards are shown in Table III-3. Rationales of naval shipyards for purchasing particular abrasives include: low free silica content; less dusting; performance; availability; and price (Reference 8). Commercial facilities use the same or similar materials for like reasons.

Ships in drydock may be painted internally, on the hull and on the superstructure. Because the painting of the superstructure does not require a dry hull and because drydock availability is limited and expensive, superstructures are frequently painted while the ship is at berth or at sea. The bulk of painting activity in a drydock is on a ship's hull and internal fuel and water tanks. Anchor chains, anchors and portable ships' machinery are frequently placed on wooden pallets in the drydock for painting. Paints applied to protect metal from corrosion or fouling are sprayed onto most surfaces although painting of irregularly shaped objects such as chains is sometimes performed with brushes. Occasionally paints are applied to flat or gently curving surfaces by roller.

There are two kinds of paint spraying equipment in use. One uses a stream of compressed air to convey the paint from container to surface being painted. A newer method rapidly increasing in use employs hydrostatic pressure to convey the paint. It is claimed that airless paint spraying is more efficient because of very low paint loss due to drift or overspray. Almost all of the paint is applied to the intended surface. Estimates of losses due to drips, spills, and overspray range from 1 to 2% for airless paint spraying. Observations during shipyard visits of spills while mixing, noticeable overspray from airguns, and concentrations of droplets on the surface of water running through drainage gutters generates more confidence in the higher than in the lower figure. Occasionally, flowing water is purposefully used to carry spilled paint into drainage gutters.

Anticorrosive and antifouling paints are typically used on ships in drydocks. To these paints may be added differing pigment materials such as lampblack, red iron oxide, or titanium dioxide to achieve a

SEATAC_WOECK024755

Table III-3. CONSTITUENTS OF ABRASIVE BLAST MATERIAL AT NAVAL SHIPYARDS

CONSTITUENTS % BY WEIGHT (SEE NOTE)

FACILITY / ABRASIVES	IRON OXIDE	CALCIUM OXIDE	POTASSIUM OXIDE	ALUMINUM OXIDE	MAGNESIUM OXIDE	SODIUM OXIDE	COMBINED SILICON DIOXIDE	COPPER	CHROMIC OXIDE	TITANIUM	MANGANESE	ZINC OXIDE	FREE SILICA	SULFUR	OTHER
PORTSMOUTH															
BLACK DIAMOND	28	6.14		21	1.1		43			.95	.04			.15	.17
PHILADELPHIA															
POLYGRIT	42	12	.03	11	2	1	17	.7	1			13			
NORFOLK															
BLACK BEAUTY	35	4	2	23	1	1	34								
CHARLESTON															
SAF-T-BLAST	28			21			50			1					
LONG BEACH															
KLEEN BLAST	19	19		9	2.9		48	.1			.22				
MARE ISLAND															
GREEN DIAMOND	23	.6		1	23	.05	52		.04				.3	.01	
PUGET SOUND															
BLACK DIAMOND	17	22	.7	9	3	.2	36	.6	.5			12			
ROCK-WOOL SLAG	16	26	2	9	3	1	39	.2	.5			4			
PEARL HARBOR															
BLACK DIAMOND	19	19		9	3		48	.1			.22				
GUAM															
GREEN DIAMOND	23	.6		1	23	.05	52		.04				.3	.01	

NOTE: Totals may not equal 100 due to rounding off. Since percentages vary between lots, these values are approximations of the average.

SEATAC_WOECK024756

Table III-4. COMPOSITIONS O. FORMULA PAINTS

Formula No.	Mil. Spec. No.	Composition	lb/100 gal	gal/100 gal
117				
Anti-corrosion	Mil.P-15328	Polyvinyl-butyral resin	56	6.10
		Zinc chromate	54	1.59
		Magnesium silicate	8	0.35
		Lampblack	0.6	0.04
		Butyl alcohol	125	18.40
		Ethyl alcohol	482	70.70
		Phosphoric acid	28	2.0
		Water	25	3.0
119				
Anti-corrosion	Mil.P-15929	Rod Lead	220	2.9
		Vinyl resin	145	12.8
		vinyl chloride		
		vinyl alcohol		
		vinyl acetate		
		Tricresyl Phosphate	15	1.5
		Methyl Isobutyl Ketone	295	43.8
		Toluene	295	40.0
121				
Anti-fouling	Mil.P-15931	Cuprous oxide	1440	27.40
		Rosin	215	23.07
		Vinyl resin	55	4.69
		Tricresyl phosphate	50	4.92
		Methyl Isobutyl Ketone	165	23.88
		Xylene	115	15.42
		Anti-settling agent	5 to 9	0.62
129				
Anti-fouling	Mil.P-16189	Cuprous oxide	1120	21.62
		Lampblack	70	4.50
		Rosin	185	19.83
		Vinyl resin	45	3.84
		Tricresyl phosphate	40	3.93
		Methyl Isobutyl Ketone	200	28.92
		Xylene	130	17.42
		Antisettling agency	5 to 9	0.64
1B30	Mil.P-24441	Thixatrope	10 to 20	
1B29		Polyanide	20	
1B27		Polyamide adduct	280 to 320	
150		Magnesium silicate	250 to 600	
151		Titanium dioxide	5 to 600	
152		Butyl alcohol	253 to 304	
153		Copper phthalocyanine blue	0 to 1	
154		Yellow iron oxide	0 to 500	
155		Red iron oxide	0 to 300	
		Epoxy resin	500 to 586	
		Naptha	215 to 258	
Anti-corrosive		Diatomaceous silica	0 to 150	
		Lampblack	0 to 18	
			lb	
1020A		Vinyl resin	161	16.1
Anti-fouling		-bis (Tributyltin) oxide	38.3	4.0
		Tributyltin fluoride	167	16.1
		Carbon black	19.4	1.3
		Titanium dioxide	7.2	0.2
		Ethylene glycol mono-ethyl ether acetate	28	3.4
		Normal prepanol	102	15.1
		Normal butyl acetate	400	54.8

SEATAC_WOECK024757

particular decorative or camouflage effect. Table III-4 presents the chemical composition of the most commonly used external hull paints on navy ships.

The anticorrosive paints are either vinyl or vinyl and lead based, or are of the newer epoxy type which is slowly supplanting the vinyl and vinyl-lead paints. Substantial quantities of both types of paints are being used in shipyards, with some epoxy paints of unknown exact compositions being supplied by manufacturers but having characteristics essentially similar to the Navy standard formula. Both types of paints will be removed by abrasive cleaning methods.

Antifouling paints are designed to prevent growth and attachment of marine organisms on hulls of ships by releasing minute quantities of toxic substances in the immediate vicinity of the hull surface. Copper-based paints using cuprous oxide have been the standard for many years (Reference 5). The use of organotin paints is very recent, but growing. Tributyl tin fluoride (TBTF) and tributyl tin oxide (TBTO) are the principal toxicants. Table III-5 identifies some organotin antifouling paints commercially available.

SEATAC_WOECK024758

Table III-5

COMPOSITIONS OF
ORGANOTIN ANTIFOULING PAINTS

Identification	Contents
M.I. Formula 1020A	Vinyl/TBTO/TBTF
Devran MD-3198	Vinyl/TBTF
Amercoat 1795	Vinyl/TBTO
Tarset 305	Coal tar epoxy/TBTA
Andrew Brown Colortox (Brolite Z-Spar)	Vinyl/TBTF
M.I. Formula 1010	Vinyl/TBTO/10,10'-oxybis-phenoxarsine
M.I. Formula 1028	Vinyl/rosin/TBTF/Cu_2O
Biomet	Vinyl/TBTF
M.I. Formula 1011	Vinyl/TBT neodecanate/TBTF
Devoe XM-075	Epoxy/Cu_2O/TBTO
Pustban VY-5529	Vinyl/TBTF
Glidden No-Cop AF	Vinyl/TBTO
International Tri-lux 40 (wide spectrum AF, Mark I)	Vinyl/TBTF
International Tri-lux 68 (wide spectrum AF, Mark II)	Vinyl/TBTF

Note: TBTO = Tributyl Tin Oxide
TBTF = Tributyl Tin Fluoride

Reference 11

SEATAC_WOECK024759

The industrial operations carried out in drydocks result in considerable amounts of debris collecting on the dock floor. This debris consists of:

- Marine organisms removed from the hull by washing or blasting
- Spent grit from abrasive blasting (whether wet or dry)
- Old paint particles, flakes, and chips abraded from the hull
- Rust particles and flakes abraded from the hull
- Fresh paint dripped, spilled, or oversprayed onto the other debris during application to the hull, machinery, or equipment.

These materials have constituents that are potential pollutants to adjacent navigable waters. In addition to the pollution potential, the debris is a hindrance to further industrial operations in the drydock, a wear hazard to dewatering and drainage pumps, a weight addition to floating drydocks, and an inconvenience to people who must work in the dock. All shipyards clean up and remove the debris but there is wide variation in the frequency, technique, and thoroughness.

In addition to ship repair and maintenance practices, other factors can affect the kind and amount of wastes generated in drydock. During the conduct of this study it was established that wide differences exist between practices at shipyards and between conditions existing at each yard. These differences also influence the waste load generated. Among the factors noted as having impacts upon waste generation are:

- Location - fresh vs. saltwater
- Type of ships serviced
- Extent of utilization and time of stay in dock
- Type of facility, configuration, and age
- Clean-up practices

Table III-6 summarizes, for facilities visited, factors relevant to the drydock location which bear upon the quantity and type of waste.

SEATAC_WOECK024760

Table III-6

LOCATION FACTORS

Ship-yard	Location	Type of Water at Facility	Climate	Predominant Vessel Service	Predominant Type of Vessel
A	East Coast	Brackish	Moderate	Ocean	Commercial
B	East Coast	Salt	Moderate	Ocean	Commercial & Naval
C	West Coast	Salt	Moderate	Ocean	Commercial
D	West Coast	Salt	Very Dry	Ocean	Naval
E	West Coast	Salt	Very Dry	Ocean	Naval & Commercial
F	Great Lakes	Fresh	Moderate	Inland	Commercial
G	Gulf Coast	Fresh	Wet	Inland & Ocean	Commercial

SEATAC_WOECK024761

The facilities located in the Great Lakes and Gulf Coast areas were both on river sites. The Great Lakes yard, however, services only inland waterways vessels while the Gulf Coast yard services both ocean and inland vessels. All other yards which were visited service predominantly oceangoing vessels. Also shown in Table III-6 are the ownership, commercial, or naval, of the ships predominantly serviced. The two factors, ocean vs. inland, and naval vs. commercial, have a major influence on the operations in the dock and the wastes produced. Oceangoing vessels generally require antifouling paints while freshwater vessels as a rule do not. Thus, antifouling paints are removed from oceangoing vessels when repainting is needed. This does not occur in strictly freshwater operations.

The seven facilities visited included two on the West Coast, three on the East Coast, one on the Gulf, and one on the Great Lakes. Of these seven, two facilities had freshwater locations, four had ocean locations, and one was located on an internal body of water. Two facilities were naval and the balance were commercial. Finally, the age and condition ranged from over fifty years and poor to one year and excellent.

Naval vessels enter drydock for extensive maintenance. During the course of this maintenance, the antifouling and anticorrosive paints are removed to bare metal. Extensive paint removal is not usually practiced on commercial vessels. In general, freshwater commercial ships may receive no blasting prior to repainting, while naval vessels are completely refurbished from bare metal. Thus, larger quantities of spent paint and abrasive usually result from work on naval vessels than from commercial ships.

A number of other factors act to create differences in drydocking and service practices between naval and commercial vessels. Commercial vessels customarily are drydocked annually or biennially for inspection. During these drydockings, hull repainting may be undertaken; however, due to the short period between drydockings, paint deterioration may not be severe and fouling may be minimal or moderate. In addition, commercial vessels are usually on the move and this reduces the amount of fouling which can occur. Naval vessels are drydocked on a routine basis at intervals of up to five years or more. Hull preparation and painting must be designed to provide protection for that period, thus cleaning to bare metal and the use of higher levels of toxicants in antifouling paints than for commercial vessels is customary. Since naval vessels spend much time in port or at anchor, the potential for fouling is more severe than if they were underway.

Utilization of the drydocking facilities is another factor which influences the total waste generated. Yards contacted indicated utilizations ranging from 30 percent to 100 percent. A drydock which

SEATAC_WOECK024762

is used infrequently or intermittently has less total discharge than one operating on short turnaround service at a high rate of utilization. Facilities used for new construction usually are occupied by the activity for periods in excess of a year. In this case, not only is the nature of the operation less productive of waste (no spent paint to blast off the hull) but flooding occurs only at launch, once per ship. Table III-7 summarizes drydock utilization for yards contacted and visited.

SEATAC_WOECK024763

Table III-7

UTILIZATION OF DRYDOCKING FACILITIES

	Percent Utilization[1]				
	0-30	31-50	51-70	71-90	>90
Facilities Visited					
Graving Docks	2	0	2	2	2
Floating Drydocks	0	0	3	5	2
Facilities Contacted					
Graving Docks	2	7	2	5	4
Floating Drydocks	6	13	6	20	1
Building Basins[2]					2
Totals					
Graving Docks	4	7	4	7	6
Floating Drydocks	6	13	9	25	3
TOTAL	10	20	13	32	9

[1]Information not available: Graving Docks, 8;
Floating Drydocks, 20.

[2]Not included in totals.

SEATAC_WOECK024764

Geographic factors can have a major influence on wastewater from drydocking facilities, especially from graving docks. Facilities located in regions of low rainfall do not have the problem of rainwater wetting the dock floor. This is true for both floating and graving docks. Thus, in those regions spent paint and abrasive can usually be removed dry. Graving docks are frequently subject to groundwater flows into the dock basin. This problem can be critical in some docks, while for others, it does not exist. Unless provisions are made to confine and remove rainfall and groundwater (hydrostatic relief water), waste may be carried from the dock with the dewatering flows.

The age and type of construction of the drydock can have an effect on the control of waste. Older docks, both floating and graving, tend to be constructed with raised slides for bilge blocks. These produce a series of wide channels, usually six to ten feet wide, extending from the dock center line to the side. Debris from work in the dock collects in these channels and cannot easily be removed. Newer construction has favored flat dock surfaces, with keel and bilge blocks being moved by cranes. Debris can be more easily removed from docks of this construction. Facility size varies considerably. For graving docks this influences the volume of harbor water introduced during flooding and subsequently removed during dewatering. Floating drydocks, during sinking and refloating, are exposed to the normal flow of the body of water in which they are located, and actual contact of water with the floating dock may be many times the volume of water needed to flood a similarly sized graving dock. Table III-8 lists dock sizes and approximate volume (without vessel occupancy) for graving facilities contacted during this study.

SEATAC_WOECK024765

Table III-8

GRAVING DOCK LENGTHS AND WATER VOLUMES

Length of Dock, Meters, (Feet)					Approximate Dock Volume, No Vessel, Million Cubic Liters, (Million Gallons)	
<122 (<400)	122-183 (400-600)	183-244 (600-800)	244-305 (800-1000)	>305 (>1000)		
X					3.8	(1.0)
	X				13.2	(3.5)
	X				13.2	(3.5)
		X			20.4	(5.4)
		X			21.2	(5.6)
		X			21.6	(5.7)
	X				23.8	(6.3)
	X				26.9	(7.1)
	X				27.3	(7.2)
	X				28.0	(7.4)
	X				28.4	(7.5)
	X				32.9	(8.7)
		X			34.1	(9.0)
	X				39.0	(10.3)
			X		42.2	(11.2)
		X			57.2	(15.1)
		X			57.2	(15.1)
		X			58.3	(15.4)
		X			59.8	(15.8)
			X		70.8	(18.7)
		X			73.4	(19.4)
		X			73.8	(19.5)
		X			79.9	(21.1)
				X	92.2	(24.1)
				X	111.3	(29.4)
				X	143.8	(38.0)
			X		173.4	(45.8)
				X	177.1	(46.8)
				X	190.4	(50.3)
				X	213.1	(56.3)
				X	244.1	(64.5)
				X	244.9	(64.7)
Totals: 1	9	11	3	8		

SEATAC_WOECK024766

SECTION IV

INDUSTRY CATEGORIZATION

INTRODUCTION

In the development of effluent limitations guidelines and recommended standards of performance for new sources in shipbuilding and repair drydocking operations, consideration should be given to whether the industry can be treated as a whole in the establishment of uniform and equitable guidelines or whether there are sufficient differences within the industry to justify its division into subcategories. For the shipbuilding and repair industry, the following factors were considered as possible justification for industry subcategorization: dockside and shipboard activities, facility age, salt vs. freshwater facilities, climate, and types of dock. After review, only salt vs. freshwater, and type of dock (graving docks and floating drydock) were found to have distinguishable characteristics.

INDUSTRY SUBCATEGORIZATION

Although there exist distinguishing characteristics, this document will apply to all types of docks with consideration given to site specific differences. Quantitative effluent guidelines, however, cannot be established at this time for drydocks because the nature of the discharge is not conducive to numerical monitoring.

There are such a wide range of dockside activities, nearly all of which are carried on to some degree in all shipyards, that dockside activities are not an acceptable criterion for subcategorization.

FACTORS CONSIDERED

Salt vs. Freshwater

Freshwater yards perform very little abrasive blasting compared with shipyards servicing saltwater vessels. Also, antifouling paints are not applied to freshwater ships. Since blasting is less common and usually on a much smaller scale, and the spent paint composition is different, shipyards servicing only freshwater vessels and those performing neither wet blasting to remove paint nor dry abrasive blasting should receive consideration with respect to their difference. Best Management Practices (See Section II) numbered 2, 5, 7 and 10 do not apply for facilities where wet blasting to remove paint or abrasive blasting does not occur.

SEATAC_WOECK024767

Others

All other factors were rejected as bases for subcategorization. Since the major source of potential water pollution appears to result from blasting, the type of shipyard activities also was eliminated as a possible subcategory. Age of the facility does not directly affect the degree or composition of discharge. Because rainfall is unpredictable and occurs to some extent at all yards, climate also was rejected as a basis for subcategorization.

The type of dock, graving dock or floating drydock, also was considered and rejected as a subcategory. The same kinds of activities are undertaken in both types of docks and thus the same kinds of debris and discharges are produced. The only difference is that during flooding and deflooding, the water passes over the ends of and through scuppers along the sides of floating drydocks while it flows through one (or more) collector channels in graving docks and is discharged using pumps.

SEATAC_WOECK024768

SECTION V

WATER USE AND WASTE CHARACTERIZATION

INTRODUCTION

This section describes the sources and uses of water by ships and industrial operations in drydocks. Potable water for use within drydocks is drawn from the same source that supports the rest of the shipyard, almost invariably the contiguous municipal system. Non-potable water is most frequently drawn directly from the adjacent navigable waterway.

Water requirements in a drydocking facility can be broadly classified as those necessary for the ship and those associated with the drydock. The former include potable water, cooling water, water for fire control, and other shipboard uses of water. All but potable water are usually supplied from harbor water. Drydock water uses are harbor water for flooding, hosedown of ship and dock surfaces, occasional wet blasting water, and dust scrubber water. Potable water is used in drydocks for tank cleaning operations.

Wastewaters similarly originate from both ship and drydock sources. Ship wastewater includes cooling water discharge, tank cleaning wastes, and occasionally boiler water discards. Drydock wastewater includes deflooding water, hydrostatic pressure relief water and gate leakage, rainwater, water used in hosedown, tank cleaning water, water from wet blasting if practiced, and any water entering the drydock from the ship or other sources.

Figure V-1 is a schematic of water and wastewater flows between a drydock, the drydocked ship, the drydock floor or deck, and the harbor. The figure represents a graving dock; however, if the flows indicated by asterisks are deleted, it also represents a floating drydock.

Not all flows are present in all drydocks. For example, potable water is supplied to vessels only if crews are on board. Hydrostatic pressure relief water is encountered in vast quantities in some graving docks, others are completely free of this stream.

In addition to water and wastewater flows, Figure V-1 shows materials entering the drydock as a result of the repair activities and the disposition of waste materials resulting from repair activities.

Table V-1 summarizes the observations made during the shipyard visits. The numbered streams in Figure V-1 are identified as to their presence or absence at each of yards A through F in Table V-1.

SEATAC_WOECK024769

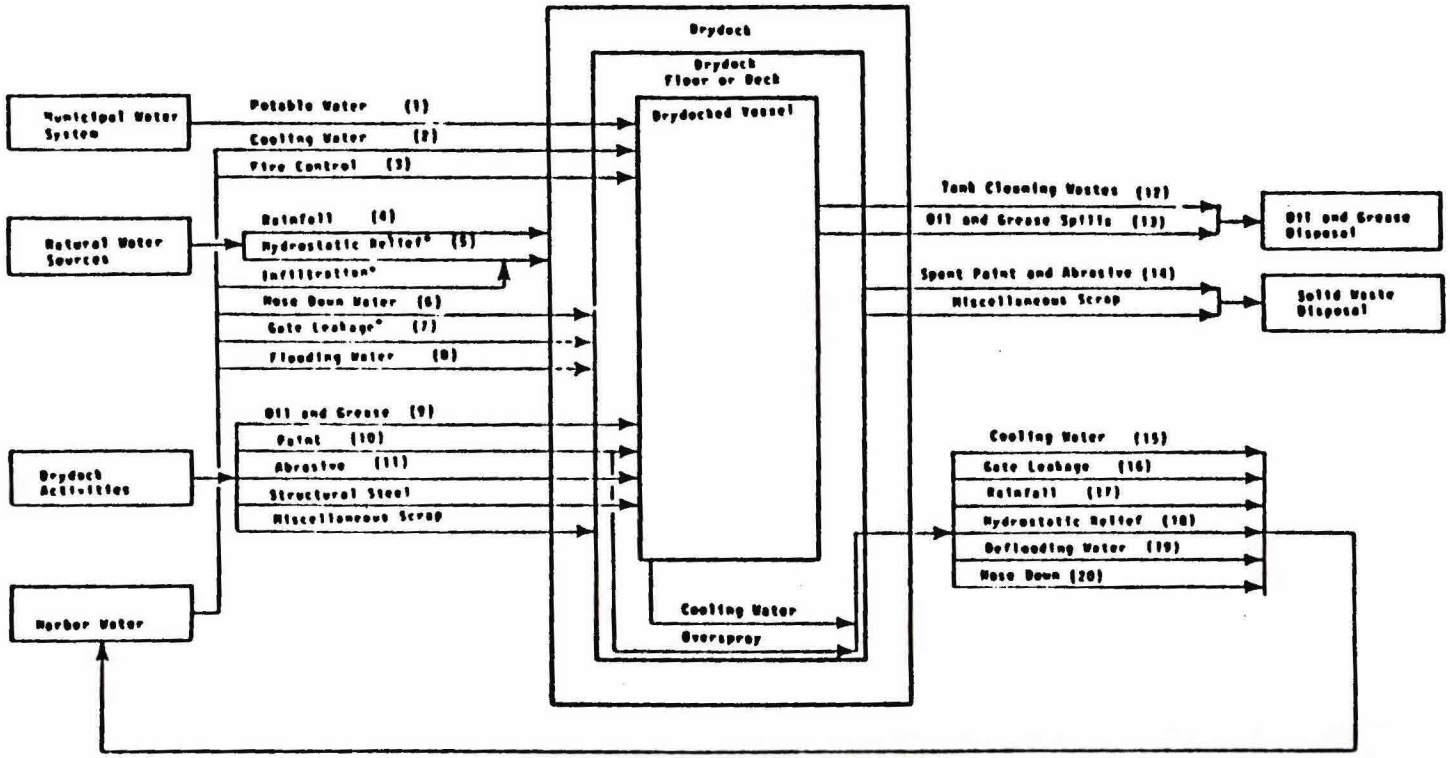

*Denotes flows not applicable to floating drydocks.

FIGURE V-1. Major Flows Associated With Drydocked Vessel

SEATAC_WOECK024770

Table V-1. WATER AND WASTEWATER PRACTICES, SHIPYARDS A THROUGH G

Water and Wastewater Flow Streams(1) In Shipyard Visited

Stream Number	SHIPYARD A	B	C	D	E	F	G
Water Into Dock							
1	P	P	P	P	P	A	A
2	P	P	P	P	P	A	A
3	P	P	P	P	P	P	P
4	P	P	I	I	I	P	P
5	P	P	NA	P	P	A	NA
6	A	I	A	I	I	I	A
7	P	P	NA	P	A	I	NA
8	P	P	P	P	P	P	P
Materials Into Dock							
9	I	I	I	I	I	I	I
10	P	P	P	P	P	P	P
11	P	P	P	P	P	I	P
Waste Materials to Disposal							
12	I	I	P	P	I	I	I
13	I	I	I	I	I	I	I
14	P	P	P	P	P	I	P
Wastewater to Harbor							
15	P	P	P	P	P	A	A
16	P	P	NA	P	I	I	NA
17	P	P	I	I	I	I	P
18	P	P	NA	P	P	A	NA
19	P	P	P	P	P	P	P
20	A	I	A	I	I	I	A

P - Present, A-Absent, I-Intermittent, NA-Not Applicable to Floating Drydock

(1) Refer to Figure V-1 for Stream Designation

SEATAC_WOECK024771

SPECIFIC WATER USES

Water For On Board Ship Use

Once they have been placed in service, ships are equivalent to small towns with respect to their demand for water and the generation of wastewater discharges. The following subsections describe the source, use, and discharge of water for each of the several systems aboard ship.

Potable Water. Potable water is drawn from supporting facilities when in drydock. In addition to direct consumption by the resident population, it is used for food preparation and personal hygiene. The wastes from these uses become sanitary discharges which are covered by other regulations and will not be further considered in this document, except that they should be segregated from process wastewaters.

Fire Protection Water. While underway, fire protection water is drawn into the vessel from water being sailed upon. It is pressurized for use in the fire protection system. When in drydock, the supporting facility provides non-potable pressurized water for this purpose. These facilities are sometimes used to hose down the dock after dewatering or to help accumulate residual spent abrasive into piles.

Boiler Feed Water. Boiler feed water is either distilled from seawater or drawn from supporting facilities such as drydocks. This type of water is often required to be purer than potable water. In use, it is converted to steam in the boiler. The steam is then used to drive propulsion, electric generation, and other machinery as well as for heating purposes. Finally, the spent steam is condensed into water and fed back into the boiler to begin the cycle again. Since this is a closed cycle system there are not normally any discharges other than unintended leaks. A ship entering a drydock for maintenance and repair may occasionally have work done on the boiler while in drydock, and it may be necessary to drain the water from the boiler.

Cooling Water. Most of the water supplied to a ship in drydock for cooling is non-potable water. Freshwater cooled equipment normally uses a recirculating chilled water system in which little water is wasted. Cooling water is used as a flow through heat sink for air conditioners and various pieces of machinery and electronic equipment. Waste cooling water is discharged from the ship into the drydock in essentially the same condition as supplied except for temperature elevation (References 5 & 11).

SEATAC_WOECK024772

Water For Industrial Use

Very little industrial wastewater is generated by the processes carried out in drydocks. However, large amounts of water may pass through the dock basin. Almost none of the drydocks in current use have design provisions for the segregation of contaminated and non-contaminated flows nor do they ensure isolation of non-contaminated flows with regard to possible contamination from contact with industrial process debris. This section will list and describe the source of all waters, except shipboard wastes, which can be potentially contaminated by flow through the drydock basin.

Launch Water, Graving Docks. As described earlier a graving dock basin is ordinarily flooded and dewatered twice for each ship docked. Water is admitted from the adjacent navigable waterway through the flooding culverts or through the caisson gate. The gate is removed, the ship is brought into or removed from the dock, the gate is replaced, and the water is returned to its source by pumping. The quality of the water on return, relative to the source, is dependent upon the condition of the admitted water and upon any material which may be added to or removed from it while in the drydock.

Launch Water, Floating Drydocks. There are two water flows involved in the sinking and raising of a floating drydock. Sinking and raising ordinarily happens twice for each ship docked.

The first water flow is that water admitted to the ballast compartments from the adjacent navigable water body to sink the dock. After the ship is brought into or removed from the dock, water is pumped from the ballast compartments back to the source body, without further contamination, to raise the dock. The return flow may be of better quality than the source since the ballast compartment may serve as a settling tank.

The second water flow is source body water flowing through the open ends of the U-shaped trough of the dock and over the pontoon deck as the dock is sunk. As the dock is raised, water flows out through the ends and other openings of the drydock and returns to the source body. The quality of the return flow, relative to the source, is dependent upon the amount and type of debris that is present on the side wall and pontoon deck surfaces prior to sinking as well as upon the time of exposure and rate of runoff during dewatering.

Wash Down. When a graving dock is flooded, it simulates a large settling tank. Silt and mud which enter the dock with the flooding water deposit on the floor following dewatering. Marine organisms may be trapped inside the dock basin when the caisson is replaced for dewatering. If the dock is not cleaned after dewatering, the dead marine organisms begin to decay and the silt and mud becomes very

SEATAC_WOECK024773

difficult to remove (Reference 11). In those facilities where these problems occur, the drydock floor and other surfaces are hosed with water from the pressurized non-potable system. Existing practices generally may include hosing (1) after initial dewatering and (2) prior to final flooding. These practices were observed in two of the seven shipyards visited. There are other times of intermittent hosing. For instance, water from drydock and ship hosing generates liquid industrial waste and, in addition, may convey solid wastes to the drainage tunnel for direct discharge to the receiving waterbody.

Washdown also occurs occasionally after clean up. Solid wastes remaining after mechanical and manual clean up efforts may be flushed by hosing into the drainage tunnel or mixed with flooding waters on the dock floor during the undocking cycle (Reference 6).

Washdown in a floating drydock is identical to that in a graving dock except that the wastes are discharged over the side of the dock instead of into the drainage tunnels.

Integrity Testing. Whenever any repair work is performed on the structure, fittings of a pressure vessel such as boilers, or whenever repair work involves penetration of ship's hull for weld repair of cracks or similar procedures, the final step in the process must be a test to demonstrate the strength or watertight integrity of the completed repair.

Although it is not necessary that a ship be in drydock to perform repairs to pressure vessel equipment, this kind of work is frequently performed while a ship is drydocked. The usual procedure for hydrostatic testing of pressure vessel equipment starts with a water rinse of the inside walls. The quality of water used depends on the type of equipment. Obviously, non-potable water is not permitted to enter a potable water system. Next, the equipment is filled with water of appropriate quality. Air is applied at test pressure and the equipment examined for leaks. The rinse and test water might be discharged to the drydock but is more likely to be dumped to a holding tank on the ship for later use.

When repairs involving penetration of the hull of ship are performed, the watertight integrity of the completed repair is usually tested in two ways. The first and preliminary method is to apply a stream from a high pressure fire hose on the repaired area while examining the other side for leaks. The final method of testing is performed as a part of the undocking cycle. When the water level reaches a point just prior to floating the ship off of the blocks flooding or sinking is stopped while a thorough inspection for leaks is made inside the ship with particular attention to repaired areas.

SEATAC_WOECK024774

PROCESS WASTE CHARACTERIZATION

Ship Originating Wastes

When a ship is drydocked, the quantity of wastewater generated depends upon the expected length of stay in dock and upon specific operations being performed on the ship during the docking cycle. Generally, ships drydocked for short periods and minor repairs operate as if they are berthed at a pier. They require potable and non-potable water and generate wastewater. On other occasions when ships are drydocked for extensive overhaul, they may use little or no water. At the beginning of the docking period, the consumption of water for such purposes as cooling is at its peak. As systems that use water are shut down, water use decreases. A ship undergoing maintenance on its non-potable water system or with its crew disembarked may use no water.

After the dock is dewatered, threaded studs are spot-welded onto the ship's hull, and metal scupper boxes are bolted on at each water discharge location. Soil chutes then are hoseclamped onto the scupper boxes and suspended from the hull. Soil chutes are flexible hoses usually made of rubber-coated nylon or canvas. The lower end of each soil chute is fastened to the appropriate disposal system; for example, cooling water to dock overboard discharge systems. Enough slack is left in the chute so it can be pushed aside if it interferes with rolling equipment. If soil chutes are properly maintained, this system is an effective means of segregating and carrying away ship's wastewater. It would be desirable for the industry to adopt a uniform standard for hose connections so as to eliminate connection leakage.

Cooling Water. As mentioned in the paragraph on Cooling Water, except for a slight temperature increase, non-contact cooling water is discharged from the ship into the drydock in essentially the same condition as supplied from the drydock non-potable water main. Reference 5 reports the following measurements taken at one West Coast facility: nonpotable water supplied at 55°F; non-contact cooling water discharged at 58°F; drainage sump temperature measured at 60°F; and groundwater infiltration, in comparable volume to the cooling water discharge, at 70°F.

Boiler Water. When ship's boilers are to be out of service for short periods, the preferred practice is to keep them completely full of very pure water. Under these conditions, there is no discharge. In some cases, during maintenance or repair work performed on the boiler while a ship is in drydock, it may be necessary to pump the water out of the boiler. This one-time discharge will be slightly alkaline and contain a mixed sludge made up of phosphate and carbonate. The volume of this one-time discharge is approximately twice the steaming capacity of the boiler.

SEATAC_WOECK024775

Bilge Discharges. Pumping oily wastewater overboard from bilges is prohibited by Coast Guard Regulations. If an accidental discharge should occur, it is treated as an oil spill within the drydock and clean up is performed before discharge to ambient waters. If an oil spill occurs during flooding or dewatering operations, the operation is stopped until the oil spill is cleaned up.

Other. Although there are other discharges from the ship, such as wastes from the cleaning of tanks and voids, they are generated by drydock industrial activity rather than ship operations and are therefore discussed in Hull Cleaning Waste below.

Dock Originating Wastes

Hull Cleaning Waste. Several methods are used to remove paint, rust, and marine growth, such as barnacles and algae, from the metal surfaces of ship hulls. In all types of surface preparation, the old paint, rust, and marine organisms are found mixed in the spent blasting media. The surface preparation methods are dry abrasive blasting, hydroblasting, wet blasting, water cone blasting, and chemical paint stripping. Surface preparation methods, other than dry blasting, are not common in the industry. Hydroblasting is being tried at three of the shipyards contacted. Wet blasting and water cone blasting is confined principally to Navy ships having special coatings. Chemical paint stripping is rare and is used only on small, localized areas made of more delicate materials. Each method is explained in greater detail below.

Dry abrasive blasting (sandblasting, grit blasting), is the most common method of surface preparation. This method is used in varying detrees by 95 percent of shipyards contacted. When employed, spent abrasive is the principal source of solids in the drydock discharge. Particle sizes of the used grit range from fine dust to whole bits of abrasive, approximately one-eighth inch in diameter. Some of the spent grit falls directly into drainage gutters, especially if a ship is large and the hull sits over the drains. The potential also exists for the abrasive to be washed into the drains from storm runoff, shipboard wastewaters dumped on the dock, hosing, seepage, or other sources of water. The spent grit is, for the most part, settleable.

Sometimes, sand is used as the abrasive, instead of utility slag or copper slag. Delicate equipment, such as sonar domes, are occasionally sand blasted. Rare aluminum-clad hulls are often blasted with sand instead of grit to minimize metal erosion during blasting. One problem with using sand instead of slag is the airborne particulates which are high in silica. The major water pollution problem from sand usage is the possible discharge of solids in the waste stream.

SEATAC_WOECK024776

The major pollution problem from hydroblasting (Reference 1) is that the volumes of water used increase the potential that the paint and grit will be flushed into the drainage discharge. Any spilled oil or solvents used elsewhere might be washed into drainage gutters. Since oxidation of the surface of the hull of the ship will prevent a good bond between the fresh paint and metal, rust inhibitors, which contain compounds such as sodium nitrite and diammonium phosphate, are used. (In fact, dry grit blasting is not performed during rainfall so that metal will not rust during or after blasting). Antifreeze may be added to the spray. This will be discharged into the wastewater streams along with the blasting water. Hydroblasting is not preferred by ship repair facilities, because the resulting surface obtained is not as suitable for paint adhesion as the surface obtained by dry grit blasting.

Wet blasting uses a mixture of grit and water. The water acts as the propulsion medium. The solids discharge potential, which is characteristic of dry grit blasting, exists as well as the aforementioned problems of hydroblasting.

Paint may be chemically stripped, rather than blasted, from more delicate apparatus such as sonar domes, antennas and deck machinery. Small articles may be dipped in some yards. Chemical paint stripping was not reported as being used in drydocks by any of the shipyards contacted or visited.

Spent Paint, Rust, and Marine Organisms. Spent paint containing the priority pollutants copper, zinc, chromium, and lead, along with iron oxides and marine organisms are removed from the ships during blasting. The paint contributes to the solid load in the waste stream as well as being subject to contact with stormwater, flooding waters, hose water, and water spills. Additionally, it can be washed, pushed, or blown into uncovered drains.

Antifouling paints are of particular concern. Toxic constituents, such as copper or organotin compounds are used in these paint formulations. Rust and marine growth removed from the sides of the ship may increase quantities of solids in the waste stream.

Fresh Paints and Solvents. Fresh paints contain a variety of metals, such as copper, zinc, chromium and lead, as well as hydrocarbons which are not present in the used paint removed from the ship's hull. Solvents generally are hydrocarbon based. Paints and solvents may be washed into drains; occasionally they are mixed directly over drains with spillage falling into the drains. Overspray from the painting operation is estimated to be between one and two percent. Paint was observed floating in discharge streams at one facility visited. Organotin paint applications were not observed in any of the shipyard visits.

SEATAC_WOECK024777

Generally two types of paints are used on ship's hulls: antifouling and anticorrosive. Antifouling paints are toxic to prevent the growth of marine organisms. Cuprous oxide based paints have been used for this purpose for many years. Increased attention has been recently given to the use of organotin antifouling paints. Although the effects of organotin are not well documented, these compounds are reported to be more effective antifoulants than copper based paints, and require a lower percentage of toxic consituents.

There is a trend toward epoxy-based anticorrosive paints replacing vinyl and vinyl-lead based coatings. Pigment materials such as lampblack, red-iron-oxide, and titanium dioxide are added to these paints. Anticorrosive additives are included in epoxy-based or vinyl base paints, usually in the form of zinc dust.

Grease and Oils. The major source of grease and oils is fuel oils and lubricants spilled on drydock floors. Spills most frequently occur when fuel and oils are transferred. Leaky hoses and connections, overflow of containers, and general carelessness contribute to spillage. When stripping fuel tanks, compartments, and when machinery is repaired, or a tank ruptures, oil and grease pollution potential increases. Spills can occur during refilling of fuel tanks at the conclusion of the drydock operations. It is reported that spills over 100 gallons are rare.

Stormwater Runoff. Stormwater is a totally uncontrollable source of wastewater in drydocks. No method of confining rainfall within the dock exists. Channels have been used to direct the water from the dock floor. The major contribution of stormwater to wastewater loads is to increase the quantity of discharge. When heavy and sustained rainfalls occur, stormwater may transport solids to the drains. Some drydocks located in dry climates have essentially no problems due to rainwater.

Dock and Gate Seepage. Another source of wastewater is leakage around the caisson gate of graving docks. This flow of harbor water into the dock can be caused by deterioration of the gate seals or by large pieces of refuse being trapped between the gate and the dock when the caisson is replaced before dewatering. This water flows across the floor and into the drainage system. Some graving docks are designed to allow relief of hydrostatic groundwater pressures through the sidewalls and floor. Relief waters also flow across the floor and into the drain system.

In some dock designs this water is isolated from the dock floor via dams and drains and is channeled directly into the drainage trenches. Flows approaching 100 gal/minute are not uncommon. Floor originating relief waters commonly flow across the dock basin and into the drainage system.

SEATAC_WOECK024778

Cleaning Waste. Detergents are used to clean water tanks, bilges, and fuel tanks. The detergents are combined with diesel oil in a one to ten ratio. After cleaning, tanks are rinsed with hot water. This process is a source of oil and grease as well as nitrogen and phosphorus compounds.

On rare occasions, delicate equipment, such as antennas and sonar domes, may be cleaned with detergents prior to painting.

Trash. Cans, paper, bottles, rags, welding rods, scrap metal, and pieces of wood are examples of trash found on a drydock floor prior to flooding. During dewatering, some of these wastes may be flushed out of the docks if they have not been removed.

QUANTITATIVE DATA

During the past several years, monitoring programs have been conducted at several shipyards. Some of the studies were performed by the shipyards while others were conducted by the government. Effluents from two shipyards were sampled for this document and the results of all of these studies are compared in this section. Additionally, leaching studies are analyzed as well as the results of a sieve analysis of abrasive collected at one shipyard. Also included in this section is a discussion of the difficulties and limitations of effectively monitoring shipyard effluents.

Sampling Results

Tables V-2 through V-10 indicate ranges and medians of results obtained during various sampling programs at shipyards A, B and D. Tables V-7 and V-10 combine the results of all data from Shipyards A and D respectively according to different aspects of the effluent discharge.

Table V-2, for Shipyard A is derived from NPDES monitoring conducted by shipyard personnel. A monthly grab sample of the harbor water was obtained at the time of flooding. While a ship was docked, multi-day composites were collected at drainage pump discharges.

Several sets of data exist for Shipyard B. Both shipyard and EPA test results of the same sampling program are summarized (Tables V-3 and V-4). This monitoring occurred during research for the Denver Rationale (Reference 2). Major differences in results are probably due to variations in laboratory techniques. For example, chromium levels found in the EPA results of the split sample are much higher than shipyard findings. This is due to the use by EPA of a glass fiber filter and a Whatman #1 paper filter during sample preparation. Additionally, limits on the accuracy of the testing methods may

SEATAC_WOECK024779

explain discrepancies such as higher values for dissolved solids than the corresponding total solids.

Heavy blasting and extensive painting of the docked vessel occurred during the sampling period. Because the purpose of these tests was to prepare the Denver study (Reference 5), and was prior to the issuance of NPDES permits, extensive clean up was not dictated.

Grab samples were collected and composited during initial and final flooding and dewatering, a total of four composited samples. Also, two sequential samplers programmed to draw one sample per hour were used to gain composited daily drainage samples.

NPDES permit monitoring data on dock drainage was available for a thirteen-month period beginning February 1975. The shipyard initiated clean-up practices only during the final month, February 1976. The drainage pump discharge was sampled once per month by yard personnel. Two or three grab samples were taken during a pump cycle and composited (see Table V-5).

Hittman Associates, under contract to EPA, conducted a sampling study in April 1976. Grab samples of the harbor water were collected prior to initial flooding and of initial and final flooded docks. Also, a grab sample was obtained at every two-foot drop in the water level during the initial and final dewaterings. These samples were then composited. Additionally, combined samples were collected and documented during drainage pump cycles throughout the monitoring period. Table V-6 presents the results of these tests.

During sampling at shipyard B, a "very light sand sweep" (32 to 35 tons of grit) of the docked ship, an ore carrier, took place, followed by anticorrosive touch-up painting, and application of antifouling paint. The hull was blasted to the light load line only. Hoses were used to transport most of the shipboard waters to drain channels. At times, cooling water fell directly on the dock floor. Clean up, using manual shovels and front end loaders, took place just prior to flooding and undocking of the ship.

Comparison of the various test results presents few contradictions. In nearly all cases, the minimum and median values were consistent. On rare occasions, high values did differ considerably. Table V-7 composites the data on Shipyard B. Regardless of the extent of painting, effluent levels remain constant. There is no apparent significant change in Shipyard B's NPDES monitoring data during, before, and after clean-up procedures were initiated. It is, therefore, concluded that the nature of the discharge is not conducive to numerical monitoring.

SEATAC_WOECK024780

Data for Shipyard D include both NPDES monitoring for 1975 (Table V-8) and sampling from May 1976 conducted for EPA (Table V-9). Shipyard personnel sampled during the second or third week of each month. The date was chosen and sampling occurred regardless of shipyard activity or weather conditions. Two samples were collected from each drain discharge, separately composited, and reported to fulfill NPDES permit requirements.

The May 1976 sampling thoroughly covered the docking procedure, including drainage discharges, regularly for ten days until the dock had been cleaned. Manual shoveling and sweeping, use of front loaders, and occasional hosing were performed to clean up 150 tons of spent abrasive used during the blasting to bare metal of the complete hull of a mediumsized Navy ship. Use of a closed cycle side blaster on about 25 percent of the ship's hull limited the abrasive tonnage. Anticorrosive paint was then applied immediately to the ship's hull. Antifouling paints were not applied during this sampling period.

The sampling program included samples of the harbor water prior to flooding as well as two additional harbor samples during the monitoring period.

SEATAC_WOECK024781

Table V-2. SUMMARY OF NPDES MONITORING AT SHIPYARD A
AUGUST 1975 THROUGH SEPTEMBER 1975

	Harbor Water		Drainage Water	
	Range		Range	
Parameter	High	Low	High	Low
pH	6.9	6.7	7.0	6.8
Suspended Solids	9.0	6.0	10.0	10.0
Settleable Solids	<0.1	<0.1	0.1	<0.1
Oil and Grease	8.2	1.2	43.82	1.71
PbT	<0.05	<0.04	<0.05	<0.04
PbD	<0.05	<0.04	<0.05	<0.04
CrT	0.02	<0.03	<0.03	0.02
CrD	0.03	<0.02	<0.03	0.01
CuT	0.47	0.2	0.54	0.36
CuD	0.04	0.03	0.04	0.04
SnT	<0.7	<0.4	<0.7	<0.4
SnD	<0.7	<0.4	<0.7	<0.4
CdT	<0.01	<0.01	<0.01	<0.01
CdD	<0.01	<0.01	<0.01	<0.01
ZnT	0.149	0.054	0.125	0.049
ZnD	0.066	0.027	0.04	0.038
AsT	0.02	<0.01	0.04	<0.01
AsD	0.02	<0.01	0.04	<0.01
HgT	0.0035	0.0025	0.018	0.0002
HgD	0.0007	0.0004	0.0005	0.0004

All values except pH are in mg/l.

SEATAC_WOECK024782

Table V-3. SUMMARY OF SHIPYARD TEST RESULTS
OF EPA/SHIPYARD MONITORING AT GD #B-3 AT SHIPYARD B
MAY 1974

Parameter	Initial Fill Value	Initial Dewatering Value	Drainage Discharge Range High	Drainage Discharge Range Low	Drainage Discharge Range Median	Final Fill Value	Final Dewatering Value
pH	7.1	7.1	7.7	7.2	7.5	7.9	7.7
Suspended Solids	30.0	35.0	19,312.0	14.0	0.49	85.0	44.0
Settleable Solids	No Results	No Results	200.0	<0.1	0.2	<0.1	<0.1
PbT	<0.05	<0.05	13.0	<0.05	0.21	0.075	<0.05
PbD	<0.05	<0.05	<0.05	<0.05	<0.05	<0.05	<0.05
CrT	0.61	0.61	0.50	<0.25	0.34	<0.025	<0.025
CrD	0.45	0.45	0.79	<0.25	0.56	<0.025	<0.025
CuT	<0.1	<0.1	60.0	<0.1	0.34	<0.25	<0.25
CuD	<0.1	<0.1	<0.25	<0.1	<0.1	<0.25	<0.25
SnT	0.11	0.11	0.204	<0.1	<0.1	<0.1	<0.1
SnD	<0.1	<0.1	<0.1	<0.1	<0.1	<0.1	<0.1
CdT	<0.05	<0.05	<0.05	<0.05	<0.05	<0.05	<0.05
CdD	<0.05	<0.05	<0.05	<0.05	<0.05	<0.05	<0.05
ZnT	<0.1	<0.1	4.7	0.17	0.42	0.23	<0.1
ZnD	<0.1	<0.1	0.15	<0.1	0.11	<0.1	<0.1
AsT	<0.02	<0.02	0.19	<0.02	<0.02	0.15	0.12
AsD	<0.02	<0.02	0.15	<0.02	<0.02	0.09	0.062
HgT	<0.0025	<0.0025	0.056	<0.0025	0.0035	0.0088	<0.0025
HgD	<0.0025	<0.0025	<0.0025	<0.0025	<0.0025	<0.0025	<0.0025
FeT	1.42	1.42	1,250.0	1.8	5.5	4.2	1.5
FeD	<0.1	<0.1	0.16	<0.1	<0.1	<0.1	<0.1
Flow (m^3/day)			(579.2)	(348.5)	(344.5)		
Flow (gal/day)			153,000	91,000	97,000		

Volume of flooded drydock = 1.1 x 10^5 m^3 (28.6 x 10^6 gallons).
All values except pH are in mg/l.

SEATAC_WOECK024783

Table V-4. SUMMARY OF EPA TESTING OF
EPA/SHIPYARD MONITORING OF GD #B-3 AT SHIPYARD B
MAY 1974

Parameter	Initial Fill Value	Initial Dewatering Value	Drainage Discharge Range High	Low	Median	Final Fill Value	Final Dewatering Value
Suspended Solids	2.0	2.0	20.0	2.0	6.0	6.0	3.0
PbT	<0.01	<0.01	13.0	<0.01	0.11	0.2	<0.01
PbD	<0.01	<0.01	1.2	<0.1	<0.1	<0.01	0.01
CrT	0.02	0.02	1.0	0.02	0.02	0.04	0.04
CrD	0.03	0.02	0.12	0.01	0.02	0.03	0.04
CuT	0.06	0.07	29.0	0.1	0.25	0.13	0.06
CuD	0.03	0.08	4.5	0.06	0.15	0.08	0.11
SnT	5.0	5.0	4.0	<0.2	2.0		
SnD	5.0	4.0	3.0	<0.2	2.0		
CdT	0.05	0.05	0.09	0.01	0.03	0.05	0.07
CdD	0.07	0.05	0.05	0.02	0.03	0.04	0.05
ZnT	11.0	0.11	39.0	0.24	0.27	0.5	0.32
ZnD	12.0	0.14	4.1	0.16	0.26	0.12	0.14
HgT	<0.0001	<0.0001	0.0003	<0.0001	0.0001	<0.0001	<0.0001
HgD	<0.0001	<0.0001	0.0001	<0.0001	<0.0001	<0.0001	<0.0001
Flow (m^3/day)			54.5	34.1	40.0		
(gal/day)			144,000	90,000	95,000		

Approximate volume of filled drydock = 1.1 x 10^5 m^3 (28.6 x 10^6 gallons).
All values except pH and flow are in mg/l.

SEATAC_WOECK024784

Table V-5. SUMMARY OF NPDES MONITORING OF DRAINAGE DISCHARGE OF SHIPYARD P FEBRUARY 1975 THROUGH FEBRUARY 1976

	GD #B-3 and #B-6			GD #B-5 and #B-7			GD #B-1 and #B-4		
	Range			Range			Range		
	High	Low	Median	High	Low	Median	High	Low	Median
pH	7.9	7.3	7.6	8.3	7.5	7.8	8.8	7.1	7.9
Suspended Solids	62.3	16.6	55.1	120.0	3.6	56.0	61.5	2.8	21.0
Settleable Solids	3.0	<0.1	0.1	0.2	<0.1	0.1	0.3	<0.1	<0.1
Oil and Grease	6.3	<0.1	1.3	5.6	0.65	1.2	2.8	0.22	0.6
PbT	0.64	<0.1	<0.1	0.27	<0.1	<0.1	0.19	<0.1	<0.1
PbD	<0.1	<0.1	<0.1	0.14	<0.1	<0.1	0.14	<0.1	<0.1
CrT	0.18	<0.1	<0.1	0.13	<0.1	<0.1	0.14	<0.1	<0.1
CrD	0.12	<0.1	<0.1	<0.1	<0.1	<0.1	<0.1	<0.1	<0.1
CuT	1.2	0.1	0.15	0.75	<0.1	0.11	0.33	<0.1	0.12
CuD	<0.1	<0.1	<0.1	<0.1	<0.1	<0.1	<0.1	<0.1	<0.1
SnT	<0.1	<0.1	<0.1	0.21	<0.1	<0.1	<0.1	<0.1	<0.1
SnD	<0.1	<0.1	<0.1	0.11	<0.1	<0.1	<0.1	<0.1	<0.1
CdT	<0.1	<0.1	<0.1	<0.1	<0.1	<0.1	<0.1	<0.1	<0.1
CdD	<0.1	<0.1	<0.1	<0.1	<0.1	<0.1	<0.1	<0.1	<0.1
ZnT	2.05	0.29	0.33	0.85	0.13	0.3	0.18	<0.1	0.11
ZnD	0.13	<0.1	0.16	0.21	<0.1	<0.1	<0.1	<0.1	<0.1
AsT	<0.1	<0.1	<0.1	<0.1	<0.1	<0.1	<0.1	<0.1	<0.1
AsD	<0.1	<0.1	<0.1	<0.1	<0.1	<0.1	<0.1	<0.1	<0.1
HgT	<0.0025	<0.0025	<0.0025	<0.0025	<0.0025	<0.0025	<0.0025	<0.0025	<0.0025
HgD	<0.0025	<0.0025	<0.0025	<0.0025	<0.0025	<0.0025	<0.0025	<0.0025	<0.0025
Flow (m^3/day)	5,300.0	2,044.1	3,570.4	4,542.7	1,135.6	2,649.6	8,327.9	4,921.0	7,570.8
(gal/day)	1,400,000	540,000	930,000	1,200,000	300,000	700,000	2,200,000	1,300,000	2,000,000
Number of Samples			13			13			13

All values except pH and flow are in mg/l.

SEATAC_WOECK024785

Table V-6. SUMMARY OF CONTRACTOR'S MONITORING AT SHIPYARD B
APRIL 1976

Parameter	Harbor Water Value	Initial Fill Value	Initial Dewatering Value	Drainage Discharge Range High	Drainage Discharge Range Low	Drainage Discharge Range Median	Final Fill Value	Final Dewatering Value
pH	7.9	8.1		8.0	7.7	7.8	7.8	7.8
Suspended Solids	12.0	41.0	43.0	68.0	13.0	24.0	26.0	41.9
Settleable Solids	0.0	0.0	0.0	0.4	0.0	0.0	0.0	TRACE
Oil and Grease	<5.0	<5.0	<5.0	9.3	<5.0	5.0	5.3	<5.0
PbT	0.26	0.25	0.39	0.37	0.2	0.31	0.25	0.31
PbD	0.26	0.25	0.16	0.23	0.16	0.19	0.25	0.31
CrT	<0.1	<0.1	<0.1	0.1	<0.1	<0.1	<0.1	<0.1
CrD	<0.1	<0.1	<0.1	0.1	<0.1	<0.1	<0.1	<0.1
CuT	<0.1	<0.1	<0.1	<0.1	<0.1	<0.1	<0.1	<0.1
CuD	<0.1	<0.1	<0.1	<0.1	<0.1	<0.1	<0.1	<0.1
SnT	<2.0	<2.0	2.0	4.0	<2.0	3.0	3.0	<2.0
SnD	<2.0	<2.0	2.0	3.0	<2.0	<2.0	2.0	<2.0
CdT	0.03	0.03	0.03	0.03	0.03	0.03	0.03	0.03
CdD	0.03	0.03	0.03	0.03	0.03	0.03	0.03	0.03
ZnT	<0.02	<0.02	<0.2	4.0	<0.02	0.3	0.1	0.5
ZnD	<0.02	<0.02	<0.02	0.1	<0.02	0.02	0.1	0.1
MnT	<0.06	0.1	0.1	0.2	0.06	0.1	0.06	0.1
MnD	<0.06	0.06	0.06	0.1	<0.06	0.06	0.06	0.1
AsT	<0.02	<0.02	<0.02	<0.02	<0.02	<0.02	<0.02	<0.02
AsD	<0.02	<0.02	<0.02	<0.02	<0.02	<0.02	<0.02	<0.02
HgT	0.0031	0.0027	0.0036	0.0021	0.0012	0.0015	0.001	0.0017
HgD	0.0031	0.0027	0.0008	0.0021	0.0011	0.0015	0.001	0.0017
NiT	<0.2	<0.2	<0.2	<0.2	<0.2	<0.2	<0.2	<0.2
NiD	<0.2	<0.2	<0.2	<0.2	<0.2	<0.2	<0.2	<0.2
AlT	<1.0	<1.0	<1.0	1.6	<1.0	<1.0	<1.0	<1.0
AlD	<1.0	<1.0	<1.0	<1.0	<1.0	<1.0	<1.0	<1.0
FeT	0.3	1.0	1.2	2.6	0.4	1.1	1.1	0.9
FeD	<0.1	<0.1	<0.1	0.1	<0.1	<0.1	<0.1	<0.1
Flow (m^3/day)						3,028.3		
(gal/day)						800,000		

Volume of filled drydock = 8.3 x 10^4 m^3 (22 x 10^6 gallons).
All values except pH and flow are in mg/l.

SEATAC_WOECK024786

Table V-7 SUMMARY OF ALL MONITORING
AT SHIPYARD B

Parameter	Initial Fill Range High	Initial Fill Range Low	Initial Fill Median	Initial Dewatering Range High	Initial Dewatering Range Low	Initial Dewatering Median	Drainage Discharge Range High	Drainage Discharge Range Low	Drainage Discharge Median	Final Fill Range High	Final Fill Range Low	Final Fill Median	Final Dewatering Range High	Final Dewatering Range Low	Final Dewatering Median
pH	8.1	7.1	(2)	7.1		(1)	8.0	7.2	7.7	7.9	7.8	(2)	7.8	7.7	(1
Suspended Solids	41.0	2.0	30.0	43.0	2.0	35.0	19,312.0	2.0	36.5	26.0	6.0	8.5	44.0	41.0	3.0
Settleable Solids	0.1	0.0	(2)	0.0		(1)	200.0	0.0	< 0.1(3)	<0.1	0.0	(2)	41.0	<0.1	(2
Oil & Grease	<5.0		(1)	5.0		(1)	61.0	<0.1	1.2(2)	5.3		(1)	<5.0		(1
Pb^T	0.25	<0.01	<0.05	0.39	<0.01	<0.05	13.0	<0.05	<0.1	<0.25	0.02	0.075	0.31	<0.01	<0.05
Pb^D	0.25	<0.01	<0.05	0.16	<0.01	<0.05	1.2	0.03	<0.1	<0.25	<0.01	<0.05	0.31	0.01	<0.05
Cr^T	0.61	0.02	<0.1	0.61	0.02	<0.1	1.0	<0.025	<0.1	<0.01	<0.025	0.04	<0.01	0.025	0.04
Cr^D	0.45	0.03	<0.1	0.45	0.02	<0.1	0.79	0.01	<0.1	<0.01	<0.025	0.04	<0.01	0.925	0.04
Cu^T	<0.1	0.06	<0.1	<0.1	0.07	<0.1	60.0	<0.1	<0.1	<0.25	<0.1	0.13	<0.25	0.06	<0.1
Cu^D	<0.1	0.03	<0.1	<0.1	0.08	<0.1	4.5	0.06	<0.1	<0.25	<0.1	0.08	<0.25	<0.1	0.11
Sn^T	5.0	0.11	<2.0	5.0	0.11	2.0	5.0	<0.1	<0.1	3.0	<0.1	(2)	6.0	0.1	<2.0
Sn^D	5.0	<0.1	<2.0	4.0	<0.1	2.0	3.0	<0.1	<0.1	2.0	<0.1	(2)	6.0	0.1	<2.0
Cd^T	0.05	0.03	<0.05	0.05	0.03	<0.05	<0.1	0.01	<0.1	0.05	0.03	<0.05	0.07	0.03	<0.05
Cd^D	0.07	<0.03	<0.05	0.05	0.03	<0.05	<0.1	0.02	<0.1	<0.05	0.03	0.04	0.05	0.03	<0.05
Zn^T	11.0	<0.02	<0.1	0.11	<0.02	<0.1	39.0	<0.02	0.26	0.5	0.1	0.23	0.5	0.1	0.32
Zn^D	12.0	<0.02	<0.1	0.14	<0.02	<0.1	4.1	<0.02	<0.1	0.12	<0.1	0.1	0.14	0.1	0.1
Mn^T	0.1		(1)	0.1		(1)	0.2	0.06	0.1(1)	0.06		(1)	0.1		(1
Mn^D	0.06		(1)	0.06		(1)	0.1	<0.06	0.06(1)	0.06		(1)	0.1		(1
As^T	<0.02	<0.02	(2)	<0.02	<0.02	(2)	0.19	<0.02	<0.1	0.15		(2)	0.12	<0.02	(2
As^D	<0.02	<0.02	(2)	<0.02	<0.02	(2)	0.15	<0.02	<0.1	0.09	<0.02	(2)	0.062	<0.2	(2
Hg^T	0.002	<0.0001	<0.0025	0.0036	<0.0001	<0.0025	0.056	<0.0001	<0.0025	0.0080	<0.02	0.001	<0.0025	<0.0001	0.0017
Hg^D	0.0027	<0.0001	<0.0025	<0.0025	<0.0001	0.0008	<0.0025	<0.0001	<0.0025	<0.0025	<0.0001	0.001	<0.0025	<0.0001	0.0017
Ni^T	<0.2		(1)	2.0		(1)	<0.2	<0.0001	<0.0025	0.001		(1)	<0.2		(1
Ni^D	<0.2		(1)	2.0		(1)	<0.2	<0.2	<0.2 (1)	0.001		(1)	<0.2		(1
Al^T	<1.0		(1)	<1.0		(1)	1.6	<1.0	<1.0 (1)	<1.0		(1)	<1.0		(1
Al^D	<1.0		(1)	<1.0		(1)	<1.0	<1.0	<1.0 (1)	<1.0		(1)	<1.0		(1
Fe^T	1.42	1.0	(2)	1.42	1.2	(2)	1,250.0	1.0	5.5 (1)	4.2	1.1	(2)	1.5	0.0	(2
Fe^D	<0.1	<0.1	(2)	0.1	<0.1	(2)	0.16	<0.1	<0.1 (1)	<0.1	<0.1	(2)	<0.1	<0.1	(2
Number of			3			3			4						3

All values except pH are in mg/l.

Numbers in parentheses () indicate number of tests performed if different from "Number of Tests".

SEATAC_WOECK024787

Table V-8 SUMMARY OF NPDES MONITORING
OF DRAINAGE DISCHARGES AT SHIPYARD D
JANUARY 1975 THROUGH DECEMBER 1975

	Harbor Water			GD #D-2			GD #D-3			GD #D-4		
	Range			Range			Range			Range		
Parameters	High	Low	Median	High	Low	Median	High	Low	Median	High	Low	Median
pH	NR	NR	NR	7.9	6.9	7.6	8.1	7.5	7.7	7.8	7.5	7.7
Suspended Solids	19.0	1.7	5.6	20.0	4.4	9.1	22.0	3.2	10.0	32.0	3.2	16.0
Settleable Solids	NR	NR	NR	0.3	0.0	0.0	0.1	0.0	0.0	0.1	0.0	0.0
Oil & Grease	NR	NR	NR	4.0	0.0	2.0	3.4	0.0	0.2	3.8	0.0	1.3
PbT	NR	NR	NR	0.7	<0.01	<0.05	0.6	<0.01	<0.04	0.58	<0.01	<0.02
CrT	NR	NR	NR	0.27	<0.1	<0.1	0.34	<0.01	<0.05	0.2	0.0	0.03
CuT	1.4	<0.05	0.12	1.2	<0.05	0.21	1.6	0.07	0.25	4.1	0.1	0.27
SnT	NR	NR	NR	<1.0	0.03	<0.1	<1.0	0.03	<0.7	<1.0	<0.01	<0.5
ZnT	1.6	0.02	0.29	1.8	0.02	0.6	1.2	0.1	0.5	1.1	0.03	0.28
FeT	0.39	<0.01	0.07	3.2	0.02	0.39	3.0	0.13	1.0	3.0	0.13	0.91
Flow (m3/day)				1135.6	1135.6	1135.6				473.2	473.2	473.2
(gal/day)				300,000	300,000	300,000				125,000	125,000	125,000

All values except pH and flow are in mg/l.

NR = No Result

SEATAC_WOECK024788

Table V-9 SUMMARY OF CONTRACTORS
MONITORING OF GD #D-3 SHIPYARD D
MAY 1976

Parameter	Harbor Water Range High	Harbor Water Range Low	Harbor Water Median	Initial Half Filled Dock Value	Initial Filled Dock Value	Initial Dewatering Value	Drainage Discharge Range High	Drainage Discharge Range Low	Drainage Discharge Median
pH	9.3	8.4	9.0	8.5	8.6	8.6	9.1	7.6	8.6
Suspended Solids	200.0	6.0	21.0	88.0	44.0	106.0	166.0	20.0	74.0
Settleable Solids	TRACE	0.0	0.0	TRACE	0.0	0.0	0.2	0.0	0.0
Oil & Grease	<5.0	<5.0	<5.0	<5.0	<5.0	<5.0	<5.0	<5.0	<5.0
PbT	0.57	0.36	0.43	0.57	0.47	0.47	0.57	0.33	0.43
PbD	0.57	0.36	0.42	0.53	0.43	0.47	0.5	0.32	0.4
CrT	0.1	<0.1	0.1	<0.1	<0.1	<0.1	0.1	<0.1	<0.1
CrD	<0.1	<0.1	<0.1	<0.1	<0.1	<0.1	<0.1	<0.1	<0.1
CuT	<0.1	<0.1	<0.1	0.4	0.1	0.2	1.1	<0.1	0.2
CuD	<0.1	<0.1	<0.1	<0.1	<0.1	<0.1	0.3	<0.1	<0.1
SnT	3.4	<2.0	2.1	<2.0	<2.0	<2.0	3.7	<2.0	<2.0
SnD	2.1	<2.0	<2.0	<2.0	<2.0	<2.0	2.0	<2.0	<2.0
CdT	0.06	0.05	0.05	0.06	0.05	0.07	0.06	<0.03	0.04
CdD	0.05	<0.03	0.05	0.06	0.05	0.06	0.06	<0.03	0.04
ZnT	0.45	<0.02	0.31	0.07	<0.02	0.04	0.59	<0.02	0.16
ZnD	0.45	<0.02	0.1	<0.02	<0.02	<0.02	0.36	<0.02	0.05
MnT	0.14	<0.06	0.1	0.06	0.08	<0.06	1.83	0.25	1.43
MnD	0.1	<0.06	0.07	<0.06	<0.06	<0.06	1.79	0.21	1.4
AsT	0.05	<0.02	<0.02	0.08	<0.02	<0.02	0.04	<0.02	<0.02
AsD	<0.02	0.02	<0.02	<0.06	<0.02	<0.02	<0.02	<0.02	<0.02
HgT	0.0014	0.0013	0.0014	0.0008	0.0018	1.6	0.0019	<0.0001	0.000
HgD	0.0014	0.0006	0.0013	0.0008	0.0012	1.6	0.0019	<0.0001	0.000
NiT	0.36	0.24	0.36	0.2	0.21	0.23	0.35	<0.2	<0.2
NiD	0.36	0.24	0.36	<0.2	0.21	<0.2	0.35	<0.2	<0.2
AlT	<1.0	<1.0	<1.0	<1.0	<1.0	<1.0	1.1	<1.0	<1.0
AlD	<1.0	<1.0	<1.0	<1.0	<1.0	<1.0	<1.0	<1.0	<1.0
FeT	0.8	0.2	0.2	0.2	0.5	1.2	3.7	1.6	2.0
FeD	0.2	0.2	0.2	0.2	0.2	0.4	2.1	0.6	0.8
Flow (m^3/day)							946.4		
(gal/day)							250,000		

Volume of filled drydock = 4.9×10^4 m^3 (12×10^6 gallons)

All values except pH are in mg/l

SEATAC_WOECK024789

Table V-10 SUMMARY OF ALA HARBOR AND DRAINAGE DISCHARGE MONITORING AT SHIPYARD D

Parameter	Harbor Water Range High	Harbor Water Range Low	Harbor Water Median	Drainage Discharge Range High	Drainage Discharge Range Low	Drainage Discharge Median
pH	9.3	8.4	9.0	9.1	6.9	7.9 (2)
Suspended Solids	200.0	1.7	6.0	166.0	3.2	17.0 (2)
Settleable Solids	TRACE	0.0	0.0	0.3	0.0	0.0 (2)
Oil & Grease	<5.0	<5.0	<5.0	<5.0	0.0	3.2 (2)
PbT	0.57	0.36	0.43	0.57	0.01	0.07(2)
PbD	0.57	0.36	0.42	0.50	0.32	0.4
CrT	0.1	<0.1	<0.1	0.27	<0.01	<0.1 (2)
CrD	<0.1	<0.1	<0.1	<0.1	<0.1	<0.1
CuT	1.4	<0.05	0.12(2)	4.1	0.03	0.2 (2)
CuD	<0.1	<0.1	<0.1	0.3	<0.1	<0.1
SnT	3.4	<2.0	2.1	3.7	0.01	<1.0
SnD	2.1	<2.0	<2.0	2.9	<2.0	<2.0
CdT	0.06	0.05	0.05	0.06	<0.03	<0.04
CdD	0.05	<0.03	0.05	0.06	<0.03	<0.04
ZnT	1.6	<0.02	0.19(2)	2.0	0.02	0.28(2)
ZnD	0.45	<0.02	<0.1	0.36	<0.02	0.05
MnT	0.14	<0.06	0.1	1.83	0.25	1.43
MnD	0.1	<0.06	0.07	1.79	0.21	1.4
AsT	0.05	<0.02	<0.02	0.04	<0.02	<0.02
AsD	<0.02	<0.02	<0.02	<0.02	<0.02	<0.02
HgT	0.0014	0.0013	0.0014	0.0019	<0.0001	<0.0009
HgD	0.0014	0.0006	0.0013	0.0019	<0.0001	0.0008
NiT	0.36	0.24	0.36	0.35	<0.2	<0.2
NiD	0.36	0.24	0.36	0.35	<0.2	<0.2
AlT	<1.0	<1.0	<1.0	1.1	<1.0	<1.0
AlD	<1.0	<1.0	<1.0	<1.0	<1.0	<1.0
FeT	0.39	<0.01	0.07(2)	3.7	0.02	1.3
FeD	0.2	0.2	0.2	2.1	0.6	0.8

All values except pH are in mg/l.

(2) Indicates both contractor and NPDES monitoring. All other results are only contractor results.

SEATAC_WOECK024790

A grab sample of the flooded dock was collected and a composite of samples collected at each two-foot water level drop was made during dewatering. Samples were taken of the drainage water during hosedown following initial dewatering and regularly throughout the monitoring period. Every two minutes during the pumping cycle, samples were drawn and composited.

During the May 1976 sampling program at Shipyard D, the harbor water was actually higher in certain constituents, such as total suspended solids and pH, than in the NPDES tests. No significant increases occurred between corresponding influents and effluents. As in samples at other shipyards, discharge levels tend to be very low with rare "high" values of certain parameters. It could not be established that dockside activities affect discharge levels. As in the case of Shipyards A and B, constituent levels remain constant throughout. Only levels of manganese varied from the harbor water concentrations. In all likelihood, this can be attributed to groundwater infiltration since no other major source of manganese is apparent. The results again lead to the conclusion that the nature of the discharge is not conducive to numerical monitoring.

Several obstacles exist with respect to conducting an accurate sampling program of floating drydocks and/or graving docks. Some of these problems are due to the nature of the operation and drydock design. Other difficulties occur during interpretation of the data.

- The physical design and operation of a floating drydock is not conducive to conducting an effective sampling program. During submersion of the dock, potential contaminants such as grit and paint might be flushed from the surface of the dock, rather than discharged through a single sampling point such as a pipe or sewer, as in the case with graving docks.

  When the dock is submerged, grit, spent paint, oil and grease, and other dockside wastes may be flushed or may float from the dock floor. Any spills, stormwater, or discharges onto the floated dock floors will randomly run off the ends and through scuppers along the sides of the floating drydock. Since there are multiple discharge points, accurate sampling is not feasible.

- Because only total drainage discharges were monitored on a daily basis, it is difficult to attribute constituents and flows to any individual source or operation. For example, variations in flows and composition of cooling water and degree of hydrostatic relief might occur concurrently with an operation such as blasting or painting. Any alteration in drainage discharge would be difficult to correlate with these activities.

SEATAC_WOECK024791

Shipyard D management once attempted to estimate all drydock discharge parameters and levels but were unable to determine the source of some of the contaminants. The problem obviously is complex.

- Insufficient documentation of sampling programs performed prior to this contract makes interpretation of previous monitoring questionable. By failing to explain what shipyard operations were in progress, weather conditions, floor conditions, and especially analytical procedures, interpretation and comparison of monitoring data is difficult.

- The lack of a "typical" daily dock operation means that all data obtained is particular to that specific day and is not necessarily representative of the usual drydock discharges. Consequently interpretation of the data is difficult. This restricts determination of sources and establishment of recommendations.

Leaching Studies

Studies of the leachability of the fresh abrasive and spent abrasive and paint were done at several shipyards. The experiments are discussed below.

Leaching Study #1 consisted of an experiment in which 400 grams of spent abrasive collected from a shipyard facility were mixed with a liter of seawater. The combination was shaken intermittently. A 100 ml aliquot was withdrawn after two days one inch below the surface. Another aliquot was withdrawn after eight days. The method of analysis was not defined. The two aliquots produced no difference in concentrations of Cd, Cr, Zn, Cu, and Sn. Only levels of lead showed a significant increase.

The results of leaching Study #2 present markedly different conclusions. These tests performed by EPA indicate that the spent abrasive may actually act as an adsorbent of metals already present in the water. Approximately 100 grams of spent abrasive collected at five different shipyards were each exposed to approximately one liter of seawater from the local bay. An analysis indicated that cadmium, chromium, lead, and tin levels all either remain the same or decreased. Only copper and zinc exhibited any increase in concentration.

Leaching Study #3 resulted in no major change in nickel, zinc, tin, or cadmium. Slight increases in chromium, copper, iron, and lead levels occurred, but mercury concentration was reduced 98 percent.

SEATAC_WOECK024792

The data for Leaching Study #4 was much more thorough. Seven spent abrasive samples and two fresh abrasive samples were subjected to a leaching test in seawater. A level of pollutant was determined after exposure of 300 hours and 700 hours. Only lead concentrations markedly increased with each sample. Copper and zinc levels increased significantly on occasions, but otherwise remained constant. Arsenic, cadmium, mercury, and tin concentrations never varied appreciably. Levels of copper, lead, and zinc in the liquid consistantly corresponded to the levels in the spent abrasive. Similarly low values of these metals in the liquid samples occurred when the spent abrasive contained lesser quantities of these three elements.

Leaching Study #5 consisted of treating five different samples of grit and river sediment with river water or deionized water. Some of the experiments involved stirring, while others did not. Chromium levels actually showed a slight decrease in value, indicating again the possibility that the abrasive acts in certain cases as an adsorbent. Copper levels changed very little. Data on leachability of zinc was inconclusive since concentrations of zinc increased in some instances and decreased in others.

There are many inconsistencies in the results of the five leaching studies reviewed. Questions which remain about testing procedures and conflicting data indicate that further study would be beneficial. Doubts exist about the reliability of a leaching test done in a small closed container where dilution and circulation are not factors.

Sieve Analyses of Debris

Sieve analyses were conducted on fresh grit and spent paint and abrasive collected by the contractor at Shipyard B. One sample consisted entirely of fresh abrasive, and the second sample containing spent paint and grit was collected from the drydock floor immediately following blasting. The two samples were analyzed using a standard sieve analysis and the results are shown in Table V-11 and V-12.

Table V-11. GRAIN-SIZE ANALYSIS OF UNSPENT GRIT (SAMPLE 1)

Sieve	% Retained	% Finer
10	15	85
40	83	2
60	1.8	.2
140	<.1	<.1
200	<.1	<.1
<200	<.1	<.1
	100	

Average specific gravity = 4.617

SEATAC_WOECK024793

Table V-12. GRAIN-SIZE ANALYSIS OF SPENT GRIT AND SPENT PAINT (SAMPLE 2)

Sieve	% Retained	% Finer
10	10	90
40	78	12
60	6	6
140	3	3
200	1	2
<200	2	1
	100	

Average specific gravity = 4.418

The fresh grit, "Black Beauty," was purchased by the company from power plants. The abrasive is actually the slag collected from coal-fired boilers. The principal constituents are iron, aluminum, and silicon oxides (see Table III-3). The spent grit and paint, which were collected following a "very light sand sweep," contained flakes and particles of antifouling and primer paints and bits of iron oxides. The test results indicate that over 95 percent of the particles in each sample were sand size and were retained in U.S.A. Standard Testing sieves numbered 10, 40, 60, and 140, made by Tyler Equipment Co., with the largest fraction retained in sieve number 40. The unspent grit particles were slightly larger and the facets were sharper and more defined. The specific gravities of the two samples did not differ significantly. These sand-size particles were readily settleable.

SEATAC_WOECK024794

SECTION VI

SELECTION OF POLLUTION PARAMETERS

INTRODUCTION

Materials originating from shipbuilding and repair activities which may have significance as potential pollutants have been identified during the course of this study. Although an exhaustive list of materials capable of discharge to waterways could be developed, many of these can be eliminated from consideration. The priority pollutants copper, zinc, chromium, and lead have been identified as being present in shipyard facilities under conditions which can result in their discharge. Compounds of these metals are constituents of fresh paints (Tables III-4 and III-5). They persist in the abrasive blasting debris as components of the spent paint and abrasive. The rationale for selection of constituents as pollution parameters or for rejection of others is presented here.

While numerical guidelines and standards are not being recommended at this time, pollution parameters are being identified for consideration by the users of this document and for further investigation, and use where it may be appropriate.

Factors which have been considered in selecting and rejecting pollution parameters include:

- The degree of pollutional constituents used and discharged from ship repair and construction operations in graving docks and floating drydocks.
- The need for preventing the introduction of the constituent into the waterway; and
- The aesthetic effects of the constituent and the effects on other uses of the water.

A list of constituents which may be subject to discharge from graving docks and from floating drydocks is shown in Table VI-1. Pollution parameters have been selected from this list, and this is discussed in the following sections.

SEATAC_WOECK024795

Table VI-1. MATERIALS ORIGINATING FROM DRYDOCKS WHICH MAY BE DISCHARGED TO WATERWAYS

Constituents	Source	Comments
Fresh Grit	Spills during transfer and handling	Uncontaminated solid, usually slag, sand, cast iron or steel shot
Blasting Debris	Material removed from ships hull during blasting	Spent grit, marine fouling, spent paint, rust, may contain priority pollutants
Solid Wastes	Repair and Construction Activities	Scrap metal, welding rods, wood, plastics, trash such as paper and food scraps
Fresh Paint	Paint mixing spills, overspray	Overspray may reach dock floor, spills to floor or drains and contains priority pollutants
Oil & Grease Fuel	Spills and leakage from ship and equipment, losses during servicing	Can originate either from vessel or from dock activities
Oil, Grease and Fuel Contaminated Water	Leakage from tank cleaning and ruptured tanks, bilgewater	May contain detergents used in tank cleaning
Solvents, Paint Remover	Paint stripping other than blasting	Not common practice
Boiler Water	Vessel boiler	High quality water, usually not discharged
Cooling Water	Vessel equipment	Supplied by on-shore source, once-through, non-contact
Hydrostatic Leakage	Groundwater leakage into dock	Graving docks only
Gate Leakage	Harbor water	Graving docks only

SEATAC_WOECK024796

Materials identified in Table VI-1 may produce other contaminants in water. Their effects are generally measured in terms of parameters such as suspended solids, dissolved solids, BOD and COD, oil and grease, and specific elements or chemical species. Table VI-2 lists specific and nonspecific parameters which are possible pollutants. Analytical methods for monitoring would necessarily include some or all of the items listed in Table VI-2.

Table VI-2. PARAMETERS WHICH MAY BE PRESENT IN WASTEWATER DISCHARGES FROM DRYDOCKS

Specific Parameters			Non-Specific
Metals		Non-Metals	Parameters
Pb	Mn	PO_4	pH
Cr	As	NO_2	Total Suspended Solids
Cu	Hg		Settleable Solids
Sn	Ni		Oil and Grease
Cd	Al		
Zn	Fe		

RATIONALE FOR THE SELECTION OF POLLUTION PARAMETERS

During the course of this study and the sampling program conducted in support of it, it has become evident that a direct cause and effect relationship between activities and materials in the docking facility and constituents in the wastewater does not always exist. In addition, much of the water purposefully used in drydocking operations is harbor water already containing measurable levels of constituents leached from the drainage area supplying the harbor, discharged from other sources, or naturally present in the water. Because of this, the problem of identifying the origin of these constituents, in the presence of sampling and analytical variations, becomes complex.

In selecting pollution parameters two questions have been considered as vital to the proper inclusion of a constituent in this category. The first of these is, "Are the constituents discharged to the environment"? Second, and equally important is, "Is the constituent present in the ship repair and construction facility in a condition capable of creating a hazardous discharge"? If both of these questions can be answered in the affirmative, the constituent should be

SEATAC_WOECK024797

considered a potential pollutant requiring monitoring and possibly necessitating controls.

Referring to Table VI-2, the listed metals all may be constituents of the paint used on hulls. The most commonly used anticorrosive paints contain zinc chromate or lead oxide. Antifouling paints in current use usually incorporate cuprous oxide. The use of arsenic and mercury antifouling paints has been discontinued because of their toxicity. Recently, antifouling paints containing organotin compounds have been introduced into practice. These have the advantage of longer life in service but when removed for repainting, like mercury based paints, can be toxic to workers. Three sources of iron exist in the drydocking facility. Steel scrap and waste metal are major sources. Iron from scrap is initially in the metallic form but air and moisture will rapidly produce a surface coat of rust. The second source is iron oxide contained in the paints. The amount of iron oxide in paint is negligible compared to the other paint components and to exposed steel surfaces found in the drydock area. The third source is metallic iron abraded from ships during abrasive blasting and subsequent potential dissolution into water.

Non-metal constituents are phosphates and nitrites. These are added to water in trace quantities during wet blasting to bare metal. They function as rust inhibitors. Their use is infrequent and total quantities are small.

Non-specific parameters which may ultimately be transported to wastewater are also listed in Table VI-2.

Solids content is measured by total solids, suspended and settleable solids, and dissolved solids. Total solids is the total of the suspended and dissolved components. Most of the suspended solids are spent paint and grit from the blasting operations, but may also include dried fresh paint resulting from overspray and spills. Other sources of solids are metal or metal scale particulates resulting from cutting and cleaning work, slag from arc welding, wood and other organic solids particles, etc., all in small quantities. Dissolved solids may be present due to constituents from spent or fresh paint, solution of iron or alloy metals from scrap steel, and solution of components from virtually any solid coming in contact with water.

A measure of the hydrogen ion concentration of water is pH. As such, it can be altered (from the neutral value of 7) to either acidic or basic values by the effects of dissolved materials added to the water.

Oil and grease are measures of the quantity of organic compounds extractable by hexane. This can include not only oils and greases, but also fuel, solvents, and paint components.

SEATAC_WOECK024798

The parameters selected as pollutants potentially released by shipyard activities into wastewaters are listed in Table VI-3. These constituents represent materials which are commonly used in drydocking facilities and hence which have potential for release to ambient waters. Although other parameters listed in Table VI-2 have been rejected as pollutants to be regulated at this time, the sampling and analysis program routinely determined the levels of those as well. The basis for rejection is discussed in the subsection on "Rationale for Rejection of Pollution Parameters."

Table VI-3. POLLUTION PARAMETERS

Specific Parameters			
Priority Pollutants	Non-Metals	Other Metals	Non-Specific Parameters
Zn	None	Sn*	Suspended Solids
Cu			Settleable Solids
Pb			Oil and Grease
Cr			pH

*Only where organotin anti-fouling plants may be used or removed from the hull.

It must be emphasized that one of the great uncertainties in establishing pollution parameters arises from the use of harbor water for most of the shipyard operations. Unlike chemical processing plants, where high quality water is used, input water may vary in constituent concentration from fresh lake and river water to saline ocean water, thus the background content of suspended and dissolved components may mask many of the parameters frequently monitored. The following subsections discuss each of the parameters selected as potential pollutants.

Zinc (Zn)

Occurring abundantly in rocks and ores, zinc is readily refined into a stable pure metal and is used extensively as a metal, an alloy, and a plating material. In addition, zinc salts are also used in paint pigments, dyes, and insecticides. Many of these salts (for example, zinc chloride and zinc sulfate) are highly soluble in water; hence, it is expected that zinc might occur in many industrial wastes. On the other hand, some zinc salts (zinc carbonate, zinc oxide, zinc sulfide) are insoluble in water and, consequently, it is expected that some zinc will precipitate and be removed readily in many natural waters.

SEATAC_WOECK024799

In soft water, concentrations of zinc ranging from 0.1 to 1.0 mg/l have been reported to be lethal to fish. Zinc is thought to exert its toxic action by forming insoluble compounds with the mucous that covers the gills, by damage to the gill epithelium, or possibly by acting as an internal poison. The sensitivity of fish to zinc varies with species, age, and condition, as well as with the physical and chemical characteristics of the water. Some acclimatization to the presence of the zinc is possible. It has also been observed that the effects of zinc poisoning may not become apparent immediately so that fish removed from zinc-contaminated to zinc-free water may die as long as 48 hours after the removal. The presence of copper in water may increase the toxicity of zinc to aquatic organisms, while the presence of calcium or hardness may decrease the relative toxicity.

A complex relationship exists between zinc concentrations, dissolved oxygen, pH, temperature, and calcium and magnesium concentrations. Prediction of harmful effects has been less than reliable and controlled studies have not been extensively documented.

Concentrations of zinc in excess of 5 mg/l in public water supply sources cause an undesirable taste which persists through conventional treatment. Zinc can have an adverse effect on man and animals at high concentrations.

Observed values for the distribution of zinc in ocean waters vary widely. The major concern with zinc compounds in marine waters is not one of acute lethal effects, but rather one of the long term sublethal effects of the metallic compounds and complexes. From the point of view of acute lethal effects, invertebrate marine animals seem to be the most sensitive organisms tested.

A variety of freshwater plants tested manifested harmful symptoms at concentrations of 10 mg/l. Zinc sulfate has also been found to be lethal to many plants and it could impair agricultural uses of the water.

Copper (Cu)

Copper is an elemental metal that is sometimes found free in nature and is found in many minerals such as cuprite, malachite, azurite, chalcopyrite, and hornite. Copper is obtained from these ores by smelting, leaching, and electrolysis. Significant industrial uses are in the plating, electrical, plumbing, and heating equipment industries. Copper is also commonly used with other minerals as an insecticide and fungicide.

Traces of copper are found in all forms of plant and animal life, and it is an essential trace element for nutrition. Copper is not considered to be a cumulative systemic poison for humans as it is

SEATAC_WOECK024800

readily excreted by the body, but it can cause symptoms of gastroenteritis, with nausea and intestinal irritations, at relatively low dosages. The limiting factor in domestic water supplies is taste. Threshold concentrations for taste have been generally reported in the range of 1.0 to 2.0 mg/l of copper while concentrations of 5 to 7.5 mg/l have made water completely undrinkable. It has been recommended that the copper in public water supply sources not exceed 1 mg/l.

Copper salts cause undesirable color reactions in the food industry and cause pitting when deposited on some other metals such as aluminum and galvanized steel. The textile industry is affected when copper salts are present in water used for processing of fabrics. Irrigation waters containing more than minute quantities of copper can be detrimental to certain crops. The toxicity of copper to aquatic organisms varies significantly, not only with the species, but also with the physical and chemical characteristics of the water, including temperature, hardness, turbidity, and carbon dioxide content. In hard water, the toxicity of copper salts may be reduced by the precipitation of copper carbonate or other insoluble compounds. The sulfates of copper and zinc, and of copper and cadmium are synergistic in their toxic effect on fish.

Copper concentrations less than 1 mg/l have been reported to be toxic, particularly in soft water, to many kinds of fish, crustaceans, mollusks, insects, phytoplankton, and zooplanton. Concentrations of copper, for example, are detrimental to some oysters above 0.1 ppm. Oysters cultured in seawater containing 0.13 to 0.5 ppm of copper deposited the metal in their bodies and became unfit as a food substance.

Tin (Sn)

Tin is not present in natural water, but it may occur in industrial wastes. Stannic and stannous chloride are used as mordants for reviving colors, dyeing fabrics, weighting silk, and tinning vessels. Stannic chromate is used in decorating porcelain, and stannic oxide is used in glass works, dye houses, and for fingernail polishes. Stannic sulfide is used in some lacquers and varnishes. Tin compounds are also used in fungicides, insecticides, and anti-helminthics.

No reports have been uncovered to indicate that tin is detrimental in domestic water supplies. Traces of tin occur in the human diet from canned foods, and it has been estimated that the average diet contains 17.14 mg of tin per day. Man can apparently tolerate 850 to 1000 mg per day of free tin in his diet.

On the basis of feeding experiments, it is unlikely that any concentration of tin that could occur in most natural waters would be detrimental to livestock. Most species of fish can withstand fairly

SEATAC_WOECK024801

large concentrations of tin; however, tin is about ten times as toxic as copper to certain marine organisms such as barnacles and tubeworms.

While the inorganic compounds of tin are essentially non-toxic at the levels normally encountered, organotin compounds exhibit a high degree of toxicity to specific organisms. These are relatively recent innovations and little experience has been developed in their use.

Due to the potential hazards of organotins to marine environments and in light of the present lack of knowledge concerning the behavior of organotin waste in the environment, abrasive blasting waste containing organtin compounds should be considered pollutants of concern.

Lead (Pb)

Lead is used in various solid forms both as a pure metal and in several compounds. Lead appears in some natural waters, especially in those areas where mountain limestone and galena are found. Lead can also be introduced into water from lead pipes by the action of the water on the lead.

Lead is a toxic material that is foreign to humans and animals. The most common form of lead poisoning is called plumbism. Lead can be introduced into the body from the atmosphere containing lead or from food and water.

Lead cannot be easily excreted and is cumulative in the body over long periods of time, eventually causing lead poisoning with the ingestion of an excess of 0.6 mg per day over a period of years. It has been recommended that 0.05 mg/l lead not be exceeded in public water supply sources.

Chronic lead poisoning has occurred among animals at levels of 0.18 mg/l of lead in soft water and by concentrations under 2.4 mg/l in hard water. Farm animals are poisoned by lead more frequently than any other poison. Sources of this occurrence include paint and water with the lead in solution as well as in suspension. Each year thousands of wild waterfowl are poisoned from lead shot that is discharged over feeding areas and ingested by the waterfowl. The bacterial decomposition of organic matter is inhibited by lead at levels of 0.1 to 0.5 mg/l.

Fish and other marine life have had adverse effects from lead and salts in their environment. Experiments have shown that small concentrations of heavy metals, especially of lead, have caused a film of coagulated mucous to form first over the gills and then over the entire body probably causing suffocation of the fish due to this obstructive layer. Toxicity of lead is increased with a reduction of dissolved oxygen concentration in the water.

SEATAC_WOECK024802

Chromium (Cr)

Chromium is an elemental metal usually found as a chromite ($FeCr_2O_4$). The metal is normally processed by reducing the oxide with aluminum.

Chromium and its compounds are used extensively throughout industry. It is used to harden steel and as an ingredient in other useful alloys. Chromium is also used in the electroplating industry as an ornamental and corrosion resistant plating on steel and can be used in pigments and as a pickling acid (chromic acid).

The two most prevalent chromium forms found in industry wastewaters are hexavalent and trivalent chromium. Chromic acid used in industry is a hexavalent chromium compound which is partially reduced to the trivalent form during use. Chromium can exist as either trivalent or hexavalent compounds in raw waste streams. Hexavalent chromium treatment involves reduction to the trivalent form prior to removal of chromium from the waste stream as a hydroxide precipitate.

Chromium, in its various valence states, is hazardous to man. It can produce lung tumors when inhaled and induces skin sensitizations. Large doses of chromates have corrosive effects on the intestinal tract and can cause inflammation of the kidneys. Levels of chromate ions that have no effect on man appear to be so low as to prohibit determination to date. The recommendation for public water supplies is that such supplies contain no more than 0.05 mg/l total chromium.

The toxicity of chromium salts to fish and other aquatic life varies widely with the species, temperature, pH, valence of the chromium and synergistic or antagonistic effects, especially that of hard water. Studies have shown that trivalent chromium is more toxic to fish of some types than hexavalent chromium. Other studies have shown opposite effects. Fish food organisms and other lower forms of aquatic life are extremely sensitive to chromium and it also inhibits the growth of algae. Therefore, both hexavalent and trivalent chromium must be considered harmful to particular fish or organisms.

Total Suspended Solids (TSS)

Suspended solids include both organic and inorganic materials The inorganic compounds include sand, silt, and clay. The organic fraction includes such materials as grease, oil, tar, and animal and vegetable waste products. These solids may settle out rapidly and bottom deposits are often a mixture of both organic and inorganic solids. Solids may be suspended in water for a time, and then settle to the bed of the stream or lake. These solids discharged with man's wastes may be inert, slowly biodegradable materials, or rapidly decomposable substances. While in suspension, they increase the

SEATAC_WOECK024803

turbidity of the water, reduce light penetration, and impair the photosynthetic activity of aquatic plants.

Suspended solids in water interfere with many industrial processes, cause foaming in boilers, and incrustations on equipment exposed to such water, especially as the temperature rises. They are undesirable in process water used in the manufacture of steel, in the textile industry, in laundries, in dyeing, and in cooling systems.

Solids in suspension are aesthetically displeasing. When they settle to form sludge deposits on the stream or lake bed, they are often damaging to the life in water. Solids, when transformed to sludge deposits, may do a variety of damaging things, including blanketing the stream or lake bed and thereby destroying the living spaces for those benthic organisms that would otherwise occupy the habitat. When of an organic nature, solids use a portion of all of the dissolved oxygen available in the area. Organic materials also serve as a food source for sludgeworms and associated undesirable organisms.

Disregarding any toxic effect attributable to substances leached out by water, suspended solids may kill fish and shellfish by causing abrasive injuries and by clogging gills and respiratory passages of various aquatic fauna. Indirectly, suspended solids are inimical to aquatic life because they screen out light, and they promote and maintain the development of noxious conditions through oxygen depletion. This results in the killing of fish and fish food organisms. Suspended solids also reduce the recreational value of the water.

Oil and Grease

Because of widespread use, oil and grease occur often in wastewater streams. These oily wastes may be classified as follows:

- Light Hydrocarbons - These include light fuels such as gasoline, kerosene, jet fuel, and miscellaneous solvents used for industrial processing, degreasing, or cleaning purposes. The presence of these light hydrocarbons may make the removal of other heavier oily wastes more difficult.

- Heavy Hydrocarbons, Fuels, and Tars - These include the crude oils, diesel oils, #6 fuel oil, residual oils, slop oils, and in some cases, asphalt and road tar.

- Lubricants and Cutting Fluids - These generally fall into two classes: non-emulsifiable oils such as lubricating oils and greases and emulsifiable oils such as water soluble oils, rolling oils, cutting oils, and drawing compounds.

SEATAC_WOECK024804

Emulsifiable oils may contain fat soap or various other additives.

- Vegetable and Animal Fats and Oils - These originate primarily from processing of foods and natural products.

These compounds can settle or float and may exist as solids or liquids depending upon factors such as method of use, production process, and temperature of wastewater.

Oils and grease even in small quantities cause troublesome taste and odor problems. Scum lines from these agents are produced on water treatment basin walls and other containers. Fish and waterfowl are adversely affected by oils in their habitat. Oil emulsions may adhere to the gills of fish causing suffocation, and the flesh of fish is tainted when microorganisms that were exposed to waste oil are eaten. Deposition of oil in the bottom sediments of water can serve to inhibit normal benthic growth. Oil and grease exhibit an oxygen demand.

Levels of oil and grease which are toxic to aquatic organisms vary greatly, depending on the type and the species susceptibility. However, it has been reported that crude oil in concentrations as low as 0.3 mg/l is extremely toxic to freshwater fish. It has been recommended that public water supply sources be essentially free from oil and grease.

Oil and grease in quantities of 100 l/sq km (10 gallons/sq mile) show up as a sheen on the surface of a body of water. The presence of oil slicks prevent the full aesthetic enjoyment of water. The presence of oil in water can also increase the toxicity of other substances being discharged into the receiving bodies of water. Municipalities frequently limit the quantity of oil and grease that can be discharged to their wastewater treatment systems by industry.

Acidity and Alkalinity (pH)

Although not a specific pollutant, pH is related to the acidity or alkalinity of a wastewater stream. It is not a linear or direct measure of either, however, it may be used properly as a surrogate to control both excess acidity and excess alkalinity in water. The term pH is used to describe the hydrogen ion - hydroxyl ion balance in water. pH measures the hydrogen ion concentration or activity present in a given solution. pH numbers are the negative common logarithm of the hydrogen ion concentration. A pH of 7 indicates neutrality or a balance between free hydrogen and free hydroxyl ions. A pH above 7 indicates that the solution is alkaline, while a pH below 7 indicates that the solution is acid.

SEATAC_WOECK024805

Knowledge of the pH of water or wastewater is useful in determining necessary measures for corrosion control, pollution control, and disinfection. Waters with a pH below 6.0 are corrosive to water works structures, distribution lines, and household plumbing fixtures and such corrosion can add constituents to drinking water such as iron, copper, zinc, cadmium, and lead. Low pH waters not only tend to dissolve metals from structures and fixtures but also tend to redissolve or leach metals from sludges and bottom sediments. The hydrogen ion concentration can affect the "taste" of the water and at a low pH, water tastes "sour."

Extremes of pH or rapid pH changes can exert stress conditions or kill aquatic life outright. Even moderate changes from "acceptable" criteria limits of pH are deleterious to some species. The relative toxicity to aquatic life of many materials is increased by changes in the water pH. For example, metalocyanide complexes can increase a thousand-fold in toxicity with a drop of 1.5 pH units. Similarly, the toxicity of ammonia is a function of pH. The bactericidal effect of chlorine in most cases is less as the pH increases, and it is economically advantageous to keep the pH close to 7.

Acidity is defined as the quantitative ability of a water to neutralize hydroxyl ions. It is usually expressed as the calcium carbonate equivalent of the hydroxyl ions neutralized. Acidity should not be confused with pH value. Acidity is the quantity of hydrogen ions which may be released to react with or neutralize hydroxyl ions while pH is a measure of the free hydrogen ions in a solution at the instant the pH measurement is made. A property of many chemicals, called buffering, may hold hydrogen ions in a solution from being in the free state and being measured as pH. The bond of most buffers is rather weak and hydrogen ions tend to be released from the buffer as needed to maintain a fixed pH value.

Highly acid waters are corrosive to metals, concrete and living organisms, exhibiting the pollutional characteristics outlined above for low pH waters. Depending on buffering capacity, water may have a higher total acidity at pH values of 6.0 than other waters with a pH value of 4.0.

RATIONALE FOR REJECTION OF POLLUTION PARAMETERS

A number of parameters shown in Table VI-2 have been rejected as pollution parameters. This rejection was based on negative answers to one or both of the questions used to select pollution parameters. Rejected parameters are listed in Table VI-4. A brief discussion of the rejected parameters and the rationale follows.

SEATAC_WOECK024806

Table VI-4. PARAMETERS REJECTED AS POLLUTION PARAMETERS

Specific Parameters			Non-Specific
Metals		Non-Metals	Parameters
As	Mn	PO_4	Total Solids
Hg	Al	NO_2	Dissolved Solids
Fe			COD
Cd			BOD
Ni			

Arsenic has been rejected because its use in antifouling paints has been discontinued due to toxicity. Mercury also formerly was included as a constituent of antifouling paints. However, on March 29, 1972, the EPA suspended its use in marine paints, and since that use was not subject to appeal (although its use in other paint formulations was appealed), it no longer is found in shipbuilding and repair facilities. If further investigation reveals the presence of arsenic in foreign paints which are subsequently removed in U.S. facilities, then it shall become a selected pollutant.

Iron has been rejected because, except for trace quantities in spent paint both as a pigment component and as rust blasted from the hulls, its presence in shipbuilding and repair facilities is in the form of structural steel, or at levels below immediate concern.

Cd, Ni, and Mn are unlikely constituents to arise from shipyard operations. No uses of these materials in shipyards have been identified. Aluminum may be present but is not considered a significant pollutant. Aluminum in the form of alum is commonly used in water treatment plants.

Phosphates and nitrites have been eliminated. Both are potentially detrimental to natural water bodies, but the only source is from wet blasting to bare metal. In this operation they are added to the water in fractional percentages as rust inhibitors. Wet blasting to bare metal is rarely used in shipyard practice because of the formation of rust on the unpainted surface.

COD and BOD have also been rejected. COD occurs as a result of the presence of reducing chemical compounds in the wastewater. The only reducing chemical species identified are nitrites, and these have been rejected as a parameter. BOD results from biological (sanitary) wastes and is not within the scope of this study.

SEATAC_WOECK024807

SECTION VII

TREATMENT AND CONTROL TECHNOLOGY

INTRODUCTION

Treatment and control of shipyard discharges is subject to problems not encountered in most industries. One example is the volume of water involved in graving dock dewatering or raising floating drydocks. Graving dock volumes shown in Table III-8 range from 3.8 million liters (1.0 million gallons) to 246 million liters (65 million gallons). Dewatering may be carried out in four hours or less and at the upper size extreme the flowrate during dewatering would be 60 million liters (16 million gallons) per hour or the equivalent of 476 million liters (390 million gallons) per day. Floating drydocks are open ended, and confinement of volumes of water equivalent to that found in graving docks would make it impossible to raise the dock. Thus, flooding and dewatering operations defy practical wastewater treatment.

There are, however, a number of practices which can potentially benefit the discharges of industrial and other waters from both graving docks and floating drydocks. In the course of this study, these practices, which constitute the treatment and control technology in use or under development, were observed or reported to the contractor by facilities visited or contacted.

Seven facilities were visited and thirty-eight were contacted by telephone. From the information obtained, the treatment and control technology in use basically consists of (1) clean-up procedures in the dock and (2) control of water flows within the dock. The degree to which the available control measures are implemented by any yard depends upon conditions prevailing at the facility, physical constraints within the facility, economic factors, and, to a large extent, management philosophy.

All facilities practice some degree of clean up at various times, although this may consist only of moving debris out of the work area when accumulations interfere with operations. During the docking period, some facilities use extensive clean-up procedures, not only to remove debris prior to flooding, but to eliminate possible contact with gate leakage, hydrostatic water, or rainwater. In general drydock clean up is directed toward improving productivity and safety and toward maintaining acceptable working conditions. Both mechanical and manual methods are in use.

SEATAC_WOECK024808

Mechanical clean-up methods used or tried include mechanical sweepers, front loaders, vacuum equipment and closed cycle blasting. Manual methods include shovels, brooms, and hoses.

Control of water flows within the dock, like clean-up procedures, varies with facility. In some cases, no controls of wastewater from either the docked vessel, industrial activities, leakage, or other natural causes are practiced.

Other facilities use methods to control and segregate water flows or have plans to implement such control. Generally, control and segregation of water flows in the dock, when practiced, has been for the same purposes as clean up, i.e., productivity, safety, and improved working conditions. However, recently, particularly in naval facilities, this form of control has the added purpose of eliminating potential discharge of pollutants.

In summary the treatment and control technology being applied or planned for drydocks consists of clean-up procedures and control and segregation of water flows. The objectives of clean-up activities are:

- To improve productivity by removing physical obstacles and impediments to men and machinery working in the dock.
- To improve safety by eliminating hazardous materials and conditions from the work area.
- To improve working conditions by eliminating health (and safety) hazards and factors detrimental to morale.
- To prevent potential contaminants from being discharged to the atmosphere or waterways.

Where control and segregation of water flows within the docks are in use or planned the objectives are:

- To segregate sanitary waste, cooling water, industrial wastewaters, and leakages in order to comply with existing regulations governing sanitary wastes.
- To comply with existing regulations governing oil spills and discharges.
- To prevent transport of solids to the waterway way and contact of wastewater with debris in the drydock.

Management practices consistant with attaining these objectives have been defined. These represent actions and philosophies which can be

SEATAC_WOECK024809

adopted in the normal course of shipyard operations. As such they can be set forth in general terms, and the particular conditions prevailing at each facility will determine the details and methods of implementation. The best management practices are presented below.

The following specific requirements shall be incorporated in NPDES permits and are to be used as guidance in the development of a specific facility plan. Best Management Practices (BMP) numbered 2, 5, 7 and 10 should be considered on a case-by-case basis for yards in which wet blasting to remove paint or dry abrasive blasting do not occur, and BMP 10 does not apply to floating drydocks.

BEST MANAGEMENT PRACTICES (BMP)

BMP 1. Control of Large Solid Materials. Scrap metal, wood and plastic, miscellaneous trash such as paper and glass, industrial scrap and waste such as insulation, welding rods, packaging, etc., shall be removed from the drydock floor prior to flooding or sinking.

BMP 2. Control of Blasting Debris. Clean-up of spent paint and abrasive shall be undertaken as part of the repair or production activities to the degree technically feasible to prevent its entry into drainage systems. Mechanical clean-up may be accomplished by mechanical sweepers, front loaders, or innovative equipment. Manual methods include the use of shovels and brooms. Innovations and procedures which improve the effectiveness of clean-up operations shall be adapted, where they can be demonstrated as preventing the discharge of solids. Those portions of the drydock floor which are reasonably accessible shall be "scraped or broomed clean" of spent abrasive prior to flooding.

After a vessel has been removed from the drydock and the dock has been deflooded for repositioning of the keel and bilge blocks, the remaining areas of the floor which were previously inaccessible shall be cleaned by scraping or broom cleaning prior to the introduction of another vessel into the drydock. The requirement to clean the previously inaccessible area shall be waived either in an emergency situations or when another vessel is ready to be introduced into the drydock within fifteen (15) hours. Where tides are not a factor, this time shall be eight (8) hours.

BMP 3. Oil, Grease, and Fuel Spills. During the drydocked period oil, grease, or fuel spills shall be prevented from reaching drainage systems and from discharge with drainage water. Cleanup shall be carried out promptly after an oil or grease spill is detected.

SEATAC_WOECK024810

BMP 4. Paint and Solvent Spills. Paint and solvent spills shall be treated as oil spills and segregated from discharge water. Spills shall be contained until clean-up is complete. Mixing of paint shall be carried out in locations and under conditions such that spills shall be prevented from entering drainage systems and discharging with the drainage water.

BMP 5. Abrasive Blasting Debris (Graving Docks). Abrasive blasting debris in graving docks shall be prevented from discharge with drainage water. Such blasting debris as deposits in drainage channels shall be removed promptly and as completely as is feasible. In some cases, covers can be placed over drainage channels, trenches, and other drains in graving docks to prevent entry of abrasive blasting debris.

BMP 6. Segregation of Waste Water Flows in Drydocks. The various process wastewater streams shall be segregated from sanitary wastes. Gate and hydrostatic leakage may also require segregation.

BMP 7. Contact Between Water and Debris. Shipboard cooling and process water shall be directed so as to minimize contact with spent abrasive and paint and other debris. Contact of spent abrasive and paint by water can be reduced by proper segregation and control of wastewater streams. When debris is present, hosing of the dock should be minimized. When hosing is used as a removal method, appropriate methods should be incorporated to prevent accumulation of debris in drainage systems and to promptly remove it from such systems to prevent its discharge with wastewater.

BMP 8. Maintenance of Gate Seals and Closure. Leakage through the gate shall be minimized by repair and maintenance of the sealing surfaces and proper seating of the gate. Appropriate channelling of leakage water to the drainage system should be accomplished in a manner that reduces contact with debris.

BMP 9. Maintenance of Hoses, Soil Chutes, and Piping. Leaking connections, valves, pipes, hoses, and soil chutes carrying either water or wastewater shall be replaced or repaired immediately. Soil chute and hose connections to the vessel and to receiving lines or containers shall be positive and as leak free as practicable.

BMP 10. Water Blasting, Hydroblasting, and Water-Cone Abrasive Blasting (Graving Docks). When water blasting, hydroblasting, or water-cone blasting is used in graving docks to remove paint from surfaces, the resulting water and

SEATAC_WOECK024811

debris shall be collected in a sump or other suitable device. This mixture then will be either delivered to appropriate containers for removal and disposal or subjected to treatment to concentrate the solids for disposal and prepare the water for reuse or discharge.

CURRENT TREATMENT AND CONTROL TECHNOLOGIES

Most of the current efforts toward water pollution control in both graving docks and floating drydocks are derived from the recommendations of the rationale for shipbuilding and ship repair facilities published by the Denver branch of EPA's National Field Investigations Center in 1974, (Reference 2), after observing the practices in effect in some shipyards. That document emphasized the segregation of wastewaters and general housekeeping practices. It was recommended that all water flows be intercepted or otherwise controlled in order to prevent contact with spent paint and abrasive and other solid materials on the drydock floor. Procedures for handling particular water flows, cooling water, hydrostatic relief water, gate leakage, and air scrubber water were specified. Miscellaneous trash was to be eliminated through "the diligent use of waste receptacles or a thorough clean up...prior to flooding." Clean up of the drydock floor to "broom clean conditions" prior to each undocking was recommended.

Many of the shipyards contacted or visited during the course of this study have made efforts to comply with these recommendations. Their efforts fall into two general areas (as set forth in Table VII-1):

- Clean up of abrasive
- Control of wastewater flows

The extent to which particular treatment and control technologies were found to exist during the contact and visit phase of this study are shown in Table VII-2.

The following paragraphs describe observed sequences of the drydock treatment and control technologies listed in Table VII-3. It should be noted that certain of these processes and technologies are designed to reduce or eliminate effluents in drainage pump discharges and overboard flows from floating drydocks. Others are effective on the much larger discharges which occur during deflooding and sinking. The next few pages document procedures for the clean-up of spent abrasive and other solid drydock debris at seven shipyards which were visited and observed (labeled shipyards A through G) as well as procedures for handling cooling water discharges.

SEATAC_WOECK024812

Table VII-1. WATER QUALITY TREATMENT AND CONTROL TECHNOLOGIES CURRENTLY BEING USED IN DRYDOCKS

Purpose	Technology	Pollutants Possibly Affected	Applicability
Clean-up of Abrasive From Drydock Floor	Front Loader	FLO, SUS, SET, HM	GD, FD
	Hand Shovel and Broom	FLO, SUS, SET, HM	GD, FD
From Drainage Trenches	Backhoe	FLO, SUS, SET, HM	GD
	Hand Shovel	FLO, SUS, SET, HM	GD
Control of Wastewater Flows	Sill, Channeling, or Trench Drain for Control of Gate Leakage and Hydrostatic Relief	FLO, SUS, SET, HM, O	

FLO = Floating Solids
SUS = Suspended Solids
SET = Settleable Solids
O = Oil and Grease
HM = Heavy Metals and Other Chemical Constituents

pH = pH
Air = Particulates
SOLIDS = Solid Waste
GD = Graving Dock
FD = Floating Drydock

SEATAC_WOECK024813

Table VII-2. WATER QUALITY TREATMENT AND CONTROL TECHNOLOGIES UNDER DEVELOPMENT OR NOT BEING USED IN DRYDOCKS

Purpose	Technology	Pollutants Intended To Be Affected	Applicability
Clean-up of Abrasive From Drydock Floor	Mechanical Sweeper	FLOW, SET, SUS, HM	GD, FD
From Drydock Floor or Drainage Trenches	Vacuum Recovery Equipment (Stationary or Mobile)	FLO, SET, SUS, HM	GD, FD
Alternative To Conventional Dry Abrasive Blasting	Water Cone Abrasive Blasting	AIR	GD, FD
	Wet Abrasive Blasting	AIR	GD, FD
	Hydroblasting (Steady Stream or Cavitation)	AIR, SET, SUS, HM, SOLIDS	GD, FD
	Closed-Cycle Abrasive Blast and Recovery	AIR, SET, SUS, HM, SOLIDS	GD, FD
	Cyclone Separation and Chemical-Physical Pretreatment	AIR, SET, SUS, HM, SOLIDS pH	GD, FD
Control of Wastewater Flows	Channeling for Improved Floor Drainage	SET, SUS, HM, O	GD
	Curbing & Channeling on Floating Drydocks	SET, SUS, HM, O	FD
	Scrupper Boxes, Hose, Piping, and/or Pumps for Clean Water Discharges	SET, SUS, HM, O	GD, FD
	Cover Plates to Prevent Abrasive from Entering Drainage System	SET, SUS, HM	GD
	Containment of Flows from Wet Blasting	SET, SUS, HM, O	GD, FD
Treatment of Wastewater Flows	Baffle Arrangement for Settling in the Drainage System	SET, SUS	GD
	Contained Absorbent in Discharge Flow Path	O	GD
	Wire Mesh in Discharge Flow Path	FLO	GD
	Adaptation of Pontoons for Settling Solids	SET, SUS, O	FD
Access for Clean-up Operations	Flat Floor Overlay	FLOW, SET, SUS, HM	GD, FD
	Removal of Bilge Block Slides	FLO, SET, SUS, HM	GD, FD
	Increased Keel Block	FLO, SET, SUS, HM	GD, FD
	Clearance	FLO, SET, SUS, HM	GD, FD
	Hydraulic Bilge Blocks	FLO, SET, SUS, HM	GD, FD

S = Sewage
FLO = Floating Solids
SUS = Suspended Solids
SET = Settleable Solids
O = Oil and Grease
HM = Heavy Metals and Other Constituents
pH = pH
AIR = Particulates
GD = Graving Docks
FD = Floating Drydocks
SOLIDS = Solid Waste

SEATAC_WOECK024814

Table VII-3. REPORTED APPLICATION OF THE TREATMENT AND CONTROL TECHNOLOGIES

Purpose	Technology	Shipyards Visited A	B	C	D	E	F	G	Shipyards Contacted (H Through A) Use	Do Not Use	Insufficient Information
Clean-Up of Abrasive From Drydock Floor	Front Loader	*	*	*	*	*	X	*	21	7	2
	Mechanical Sweeper	X	X	*	X	*	X	X	1	27	2
	Hand Shovel	*	*	*	*	*	X	*	26	1	3
	Broom	X	X	X	*	*	X	X	5	20	5
	Vacuum Recovery Equipment	X	X	X	Z	X	X	X	2	26	2
From Drainage Ditches	Backhoe	X	X	NA	X	X	*	NA	0	.0	30
	Hand Shovel	*	*	NA	*	*	*	NA	0	0	30
	Vacuum Recovery Equipment	X	X	NA	Z	X	X	NA	0	0	30
	Container Lifted by Crane	X	X	NA	X	X	*	NA	0	0	30
Alternative to Conventional Dry Abrasive Blasting	Water Cone Abrasive Blasting	X	X	X	*	X	X	X	0	0	30
	Wet Abrasive Blasting	X	X	X	*	*	X	X	0	4	26
	Hydroblasting										
	Steady Stream	X	X	X	X	X	X	X	3	4	23
	Cavitation	X	X	X	X	X	X	X	0	0	30
	Closed Cycle Abrasive Blast and Recovery	X	X	X	Z	X	X	Z	1	28	1
	Cyclone Separation Chemical-Physical Pretreatment	X	X	X	X	Z	X	X	0	0	30
Control of Waste-water flows	Sill, Channeling, or Trench Drain for Control of Gate Leakage and Hydrostatic Relief	*	*	NA	*	*	*	NA	0	0	30
	Channeling for Improved Floor Drainage	X	X	X	*	X	X	X	0	0	30
	Curbing and Channeling of Floating Drydocks	X	NA	X	X	NA	NA	X	0	0	30
	Scupper Boxes, Hose, Piping, and Pumps for Clean Water Discharges	*	*	*	*	*	X	X	4	5	21
	Cover Plates to Prevent Abrasive from Entering Drainage System	X	X	NA	X	*	X	NA	0	0	30
	Containment of Floor from Wet Blasting	X	NA	NA	X	*	NA	NA	0	0	30
Treatment of Wastewater Flows	Baffle Arrangement for Settling in the Drainage System	X	Z	NA	X	X	X	NA	0	0	30
	Contained Absorbent in Drainage Discharge Flow Path	X	X	NA	X	X		NA	0	0	30
	Wire Mesh in Drainage Discharge Flow Path	X	X	NA	X	NA	NA	NA	0	0	30
	Adaptation of Pontoons for Settling Solids	X	NA	X	X	NA	NA	X	0	0	30

NOTE: * = Use
X = Do Not Use
Z = Planned, Infrequent Use, or Under Development
NA= Not Applicable

SEATAC_WOECK024815

Most of the facilities visited perform a manual pick up of large debris prior to each undocking. Such debris includes scrap metal, large wood chips or blocks, metal cans, scrap paper, paint cans, and the like. After this manual pick up, with the aid of shovels, the debris is deposited into receptacles on the drydock floor for removal and disposal. Some shipyards require this procedure at the end of each shift. Upon completion of this phase, only spent abrasive and other small sized debris remain on the drydock floor. A variety of procedures and technologies to remove the remaining substances were observed.

At many shipyards, no efforts are made to remove spent abrasive from the drydock floor prior to flooding. Docks servicing fresh water vessels rarely do any extensive blasting and consequently do not have spent abrasive to collect. In some cases contractual requirements do not allow time for clean up. Some companies regard the clean up process as difficult, time-consuming, labor-intensive, and hence expensive. The practice of no clean up was observed in smaller or older drydocks, particularly those with raised bilge block slides and those not requiring keel or bilge block movement prior to the next docking. The necessity for clean up is perceived at these docks only when accumulations of spent abrasive reach such levels that it interferes with keel or bilge block placement or movement, creates hazardous working conditions, or reduces productivity. Those conditions may be reached after only a few ships have been serviced or after many. Clean up may be as frequent as weekly or as infrequent as semiannually.

When clean up is necessary, front loaders are usually placed on the drydock floor. With graving docks, cranes are required to lower the machinery into the dock basin. The front loader is often modified to permit access to the floor beneath the ships hull and consequently to operate while the ship is still in dock. The loaders scrape and push the spent abrasive into piles. Men with shovels and the front loaders then place the accumulated waste in containers or hoppers.

When bilge block slides are present or low keel blocks are employed, the efficiency of operation of the front loaders is greatly reduced. The equipment has difficulty in passing over bilge block slides. Frequent stopping and starting, climbing and falling wears down the equipment and is time consuming. Laborers with shovels must manually clean areas inacessible to the front loader, such as beneath the hull and around the blocks and slides.

To remove the remaining grit some shipyards use manual sweepers. Workers with push brooms sweep the abrasive into piles which are transferred to the hoppers.

SEATAC_WOECK024816

In a few instances mechanical sweepers are also used. One sweeper, a modified 1-3/4 ton truck, employs horizontal and vertical rotary brushes to loosen and pick up spent abrasive and other debris from the floor. These wastes are collected inside the sweeper. The sweeper can make two passes along the length of the dock before becoming full; then it must be emptied before continuing. The sweeper dumps its contents in a pile on the floor of the drydock. The pile is then loaded into containers by front loaders and laborers with shovels.

The mechanical sweeper has no arrangements for reaching around or under obstructions. It is also too high to clean under ships and can only clean those areas over which it passes. The sweeper cannot operate effectively unless the floor is clear of removable obstructions such as scupper hoses, hoppers of abrasive, scaffolding, and materials being used in the drydock (paint cans, metal plates, etc.). Thus, the sweeper does not begin clean up until after exterior work on the hull has been completed. When a large ship has been docked, there is little clearance along the sides or at the end of the dock. In such cases, space does not allow for the sweeper to be used prior to undocking.

Shipyard A has two graving docks and three floating drydocks It utilizes scupper boxes and hoses to direct cooling water discharges from the vessel to the drydock drains and ultimately to the harbor. Graving dock caisson leaks are intercepted at the outboard end of the dock and pumped back to the harbor without coming into contact with solid wastes on the floor of the graving dock. Hydrostatic leakage flows to drainage trenches along the periphery of the floor and is pumped to the harbor. The wastes are invariably wet and packed from flooding or sinking of the dock, from rain, and from the movement and placement of equipment, men and materials. This makes the drydock floor at Shipyard A difficult to clean thoroughly. Also, Shipyard A drydocks have bilge block slides that are raised above the dock surface and interfere with cleaning operations.

Clean up occurs whenever abrasive buildup has reached a depth such that the bilge blocks can no longer be repositioned on the bilge slides. This is necessary following approximately five dockings. When clean up is necessary, front loaders are brought in to scoop and scrape the drydock floor. Wastes are accumulated in piles, then collected in containers using front loaders and shovels. The containers are lifted out of the drydock by cranes and placed onto or emptied into trucks. Laborers with hand shovels accompany the front loaders, primarily under the hull and at the bilge blocks and their slides.

Shipyard B has five graving docks and cleans up spent abrasive and related debris prior to each undocking. The clean up procedure of Shipyard B is identical to that of Shipyard A except that it is

SEATAC_WOECK024817

performed more frequently. As the time for undocking approaches, front loaders and laborers with shovels clean the floor. In Shipyard B, the wastes are frequently dry. Shipyard B has no raised bilge block slides. Thus, the clean up at Shipyard B is ordinarily less time consuming per occurrence than the clean up at Shipyard A. Shipyard B uses scupper boxes and hoses to direct cooling water discharges to the drydock drains. The hoses observed, however, were in poor shape and considerable leakage flowed across the drydock floor. The discharges are pumped from the drains to the harbor. Caisson leakage is intercepted at the outboard end of the docks and pumped to the harbor. Hydrostatic relief and leakage waters flow to trenches along the periphery of the dock and are pumped to the harbor.

Shipyard C has two flush decked floating drydocks and also cleans prior to and after each undocking. The cleaning is performed using a mechanical sweeper and a front loader. The sweeper and front loader are utilized to clean as best as practicable before flooding. Following flooding and undocking of the vessel, the sweeper and front loader are returned to the dock and work unimpeded (except for the keel blocks and bilge blocks) and effect a complete cleaning operation. In every case, the sweeper completes its clean up including areas previously inaccessible subsequent to flooding, undocking, and deflooding but before the docking of the next vessel.

Shipyard D has three graving docks and two floating drydocks. Clean up of spent abrasive and associated debris is performed on a continuing basis. Upon completion of a blasting operation, front loaders and shovels are brought in to collect the wastes into piles and then load them into containers. This operation may occur several times during a single docking depending on the scheduling of abrasive blasting. Following the use of front loaders and shovels, laborers use push brooms to sweep the docks. Just before undocking, the front loaders, shovels, and brooms are returned to the drydock floor for a final comprehensive clean up. On occasion, remaining wastes are hosed to the drainage system. The drainage system and the flooding tunnel are shovelled out on an as-required basis, but not necessarily prior to each undocking. Scupper boxes and hoses are attached to the vessel in drydock to direct cooling waters to drains discharging to the harbor. Hydrostatic leakage water and water from internal tank blasting units flow across the drydock floor to overboard drains where they are pumped to the harbor.

Shipyard E has one graving dock. The clean up at Shipyard E begins with front loaders and shovels. The shovellers accompany the front loaders in addition to cleaning those areas the front loaders cannot reach or cannot clean effectively, such as at corners and surfaces or between bilge blocks. Wastes are consolidated into piles before being loaded into containers. A mechanical sweeper follows the front loaders and shovels. The sweeper works like the sweeper at Shipyard

SEATAC_WOECK024818

C. If these procedures do not result in a satisfactory floor condition, shovels and push brooms are used to complete the job. Flooding ports in the dock floor are shovelled out prior to each undocking. The flooding tunnel is inspected and shovelled out if necessary. Stairways are swept manually, as are the utility dugouts and the altar. Areas adjacent to the dock are cleaned by a small, mobile, mechanical sweeper the size of a small front loader. No hosing of abrasive is performed at Shipyard E during the clean up prior to undocking. Clean up of abrasive and debris occurs for each ship at the end of its stay in the drydock, not on an ongoing basis as is the practice at Shipyard D. Scupper boxes and hoses are attached to the vessel after drydocking to direct cooling water discharges to drains to the harbor. The graving dock was dry with no evidence of hydrostatic relief or leakage water in the dock during the visit to this shipyard.

All of the shipyards described up to this point service primarily saltwater ships which require high levels of abrasive blasting. Some shipyards service only freshwater ships. Clean-up procedures and technologies at these yards are correspondingly different.

Shipyard F has two graving docks and services vessels that sail in fresh (inland) waters. This facility does very little abrasive blasting. Ships at this yard receive no abrasive blast treatment at all to remove paints. Shipyard F has no mechanized equipment for the removal of spent abrasive and other granular debris. It performs no clean up of such materials prior to undocking. Large debris is picked up manually. After flooding, undocking, and the subsequent deflooding, material accumulated on the drydock floor (which at this point includes silt and other debris which entered during flooding) is hosed to the drainage trenches. Hosing of the dock floor is carried out in order to maintain clean working conditions and to improve productivity. Therefore, the clean up is not always complete, especially at the ends of the dock, near the drainage trenches and away from working or dock entry areas. Little hosing is done on minor accumulations around the keel blocks or bilge blocks if no block movement is necessary. Periodically (every few months), the trenches fill and require cleaning. All drainage water from the graving docks is pumped into a sluice. A floating box containing an absorbent for oil and grease completely blocks the discharge end of the sluice. Water can flow under (the box extends only a short distance below the surface) and through the box, but floating oil and grease are removed by the absorbent.

All vessels are evacuated and shut down during drydocking; consequently, little or no water of any type is discharged to the graving docks during the servicing period. Caisson leaks and hydrostatic relief or leakage waters are collected in trenches and pumped through the sluice to the harbor.

SEATAC_WOECK024819

Shipyard G has two floating drydocks. During ship repair on one of the floating drydocks (a flush deck dock), spent abrasive is consolidated into piles using front loaders and shovels. The piles are loaded into containers for disposal. This activity begins soon after abrasive blast operations have ended regardless of the remaining period for the ship to be in dock. Shipyard G does more abrasive blasting than Shipyard F, but rarely at levels comparable to the saltwater shipyards A, B, C, D, and E. Normally, the crew does not remain on board during drydocking at Shipyard G. Since shipboard services are shut down there are no cooling water discharges. On the second floating drydock (having bilge block slides on deck), spent paint and abrasive is cleaned up only when accumulations interfere with vessel repair operations or cause safety hazards. This occurs about twice a year. The vessel is evacuated during drydocking; consequently, there are no discharges from the ship.

CONTROL AND TREATMENT OF WASTEWATER FLOWS

In addition to clean up of solid wastes from the drydock floor, efforts to control and treat wastewater flows are being undertaken at many facilities. In the dewatered graving dock there are two streams of wastewater during ship repair operations: (1) cooling and process wastewater discharges, and (2) flows from various sources such as caisson leaks, hydrostatic relief or leakage, and industrial or process wastewater. Floating drydocks also have these wastewaters, with the exception of caisson and hydrostatic leaks. Process wastewaters include discharges from air scrubbers, wet grit blasting, and tank and bilge cleaning. Tank and bilge cleaning wastes are oil and water mixtures. A collection and holding tank system, usually the Wheeler (TM) type, is used to remove and separate this waste. Other wastewaters may be directed by hoses or allowed to flow across the floor into the graving dock drainage system, or directly to ambient waters from floating drydock pontoon decks. Miscellaneous water flows come from such sources as hydrostatic relief, non-contact cooling discharges, gate leakage, and pipe and fitting leakage. Existing dock drainage system designs allow process wastewaters to mix with other wastewater. They may contact solid wastes on the deck or in the trench before being discharged into ambient waters.

The volume of wastewater discharged from a ship in drydock may depend upon the point in the docking cycle. As shipboard equipment which uses water is being shut down following docking, the volume of discharge decreases. The continuing volume of discharge from the ship will depend upon the size of the crew remaining on board while in drydock. Some ship operators, such as the U.S. Navy, keep most of the operating crew on board even when the ship is drydocked for an extended period. This practice generates considerable volumes of wastewater. Other operators may shut down all equipment and remove the entire crew even for short drydocking periods.

SEATAC_WOECK024820

Another factor bearing on the volume of water passing through a drydock is the effectiveness and level of maintenance effort applied by shipyard facility personnel to the many fittings and valves in the drydock potable and nonpotable water systems. Industrial water usage is minimal and higher flows occur only if wet abrasive blasting, water cone blasting, or hydroblasting is used. The use of hoses for clean up also contributes to wastewater volume. Drydock industrial waters are sometimes controlled by channels, sills, and drainage trenches. Some graving docks have arrangements for intercepting flows and conducting the water to drainage systems. This reduces contact of gate leakage and hydrostatic relief water solids on the drydock floor. Floating drydocks, on the other hand, generally lack arrangements for the containment of flows, and have no hydrostatic or gate leakage.

Graving dock drainage system designs vary widely but all involve networks of gutters, trenches, and/or culverts which serve to collect the heavier settleable solids transported in industrial wastewater flows. Unless promptly removed this debris may come in contact with water flows. To protect drainage pumps from excessive wear or damage, some drainage systems are designed with settling basins or sand traps to intercept and settle even the lighter particles. This removes transported particles from the discharge flow but may increase contact of water with solid wastes. Some of these settling locations, such as shallow transverse and longitudinal gutters in the drydock floor are relatively easy to clean out. Large longitudinal drainage culverts under the walls of graving docks can be extremely difficult to clean.

TREATMENT AND CONTROL TECHNOLOGIES UNDER DEVELOPMENT OR NOT IN COMMON USE

Many technologies are being developed that potentially can reduce solid waste, expedite clean up and control wastewater flows. In the section on "Control or Clean Up of Abrasive Through Access In Clean Up Operations" these technologies are discussed. The second half of Table VII-1 has summarized these developmental projects.

Control or Clean Up of Abrasive

High-suction vacuum grit removal equipment, such as the Vacu-Veyor (TM) unit, is used extensively to collect and remove debris from blasting operations in the ship's interior. Occasionally, however, the situation accommodates placing a container directly beneath an access hole cut through the ship's side, to collect the debris directly. Several existing kinds of equipment, not originally designed for drydock use, are being evaluated and modified to facilitate the removal of spent abrasive and debris. Vacu-Veyor (TM) units are relatively simple devices which are used in removing dry abrasive and debris from internal tank blasting operations and occasionally from drydock floors. They suffer, however. from a lack

SEATAC_WOECK024821

of mobility and the airborne particulate material cannot be effectively contained when blown into open skip boxes (Reference 9). At least one shipyard is attempting to develop this equipment by enclosing the container and making the unit more easily moveable. Two other complex, high-suction vacuum machines are being evaluated and developed by shipyard facilities. They are the VAC-ALL (TM) (References 8, 9, & 12) and the VACTOR 700 (TM) (References 6 & 8) units. Both of these units have demonstrated tremendous capability to move large amounts of grit in a relatively short time but both, in their present configuration, have many limitations for drydock application. A third type of vacuum equipment being evaluated for use in removing grit and debris from drydock floors is a low profile self-propelled device called the ULTRA-VAC (TM) Grit Vacuum. It shows the most promise for application in flush floored drydocks and can best be described as a powerful vacuum cleaner on wheels (References 8, 9, & 12). Until a design evolves from the development of these three types of vacuum equipment that will meet the needs of the varying drydock characteristics, most facilities will be forced to resort to labor intensive, time consuming techniques to remove debris.

Alternatives to conventional dry abrasive blasting include water cone abrasive blasting, wet abrasive blasting, hydroblasting (steady stream or cavitation), and closed cycle abrasive blast and recovery. Some of these techniques have potential for reducing or eliminating the quantity of solids required in blasting but some substitute a water pollution problem for an air pollution problem. None of these technologies can completely replace conventional dry abrasive blasting and all are in various stages of development. Table VII-2 indicates which shipyards contacted are currently practicing these alternatives.

A variation of the wet grit method of abrasive blasting, called water cone, water envelopment, or water ring, is fairly new but rapidly gaining popularity particularly with increasing use of organotin antifouling paints on some Navy ships. This process projects a cone of water around the stream of air and abrasive as it leaves the hose nozzle. This is accomplished by a simple water ring accessory which fits around any standard blasting hose nozzle. This method has the advantages of dry grit blasting with less dust production. It does, however, add to the volume of industrial wastewater and rust inhibitors, when added, are present in the wastewaters (References 7 and 9).

Hydroblasting is a surface preparation method used when extensive, heavy abrading is not a requirement. In one technique a cavitating water jet is used as the abrading material. As explained in Reference 13:

> "The basic concept simply consists of inducing the growth of vapor-filled cavities within a relatively low velocity liquid

SEATAC_WOECK024822

jet. By proper adjustment of the distance between the nozzle and the surface to be fragmented, these cavities are permitted to grow from the point of formation, and then to collapse on that surface in the high pressure stagnation region where the jet impacts the solid material. Because the collapse energy is concentrated over many, very small areas at collapse, extremely high, very localized stresses are produced. This local amplification of pressure provides the cavitating water jet with a great advantage over a steady non-cavitating jet operating at the same pump pressure and flow rate."

Considerable success in laboratory experiments is claimed for the CAVIJET (TM) method but results of field evaluation are not available.

Several versions of closed-cycle vacuum abrasive blasting equipment are undergoing engineering development and operational evaluation at various shipyard facilities. They all operate on the principle of automatically recovering and reusing abrasives. Abraded coatings and fouling are sometimes separated and contained for land disposal. The machines, when operating as designed, are expected to eliminate both air and water pollution problems resulting from dust emissions and from solid wastes entering the drydock drainage system. If steel shot is used as the abrasive and is recovered, the solid waste load is reduced many times. Steel shot retains its cutting power even after repeated reuse. The closed-cycle blaster has limits however. These machines will not completely supplant other surface preparation techniques since they are large, heavy, and require considerable space for maneuvering. In addition, they are not designed to function on other than nearly flat or gently curving surfaces. More detailed information regarding come of these machines is provided in technical references to this document, particularly those prepared by or for the U.S. Navy.

Control of Wastewater Flow

The control and treatment of wastewater flows is critically tied to the segregation of wastewater streams. This philosophy is best expressed in a quote from Reference 6:

"The key to cessation of unnecessary liquid waste generation...is seen as segregation of wastes as completely as possible and reasonable. Unpolluted waters should be segregated from contaminated solid wastes and vice versa.

An appropriate system to collect and convey liquid waste must be capable of maintaining segregation until contaminated wastes are removed from the drydock and unpolluted wastes are properly discharged to harbor receiving waters."

SEATAC_WOECK024823

This report proceeds with definitions of systems and techniques to segregate, collect, and transfer contaminated and uncontaminated wastewater streams (and materials causing contamination) to environmentally acceptable treatment systems.

A similar philosophy of approach was reported in Reference 11:

> "A practical solution to eliminate the large volume of polluted wastewater discharge into the harbor would be segregation of clean water flows from both spent abrasive and any already polluted wastewaters. This is the basis for the following recommendations. Wastewaters can be divided into three streams. The first stream, comprised of hydrostatic water, ships' cooling water, and miscellaneous other equipment cooling water discharges, could be collected in what will be henceforth called the clean water conduit. These unpolluted waters could be discharged directly into the harbor without treatment. The second stream, comprised of drydock sanitary wastewater and ships' non-oily wastewater, could be collected in a sanitary sewer and pumped to a municipal sewage treatment plant. The third stream, comprising all other wastewater discharges including ships' oily wastewater, dock floor wash water, miscellaneous equipment washings, spills, sewer leaks, rain, and clean water which accidentally contacts the dock floor, could be collected in an industrial wastewater sewer and pumped to an industrial wastewater treatment facility."

The facility that served as a model for these two studies is planning the implementation of the recommended improvements.

Segregation of water flows is accomplished by physical isolation. Collection can be through either or both in-floor and above-floor plumbing systems. For example, above-floor systems can be fabricated from PVC piping and attached adjacent to keel blocks.

Treatment of Wastewater Flows

Innovative controls will be installed at one shipyard in its graving docks having large transverse trenches or cross drains near the outboard or drain end. Involved is an arrangement of baffles in the cross drain as a means of minimizing the discharge of settleable solids and floating material. The baffles will be installed so as to use the cross drain as a settling pond. A baffle acts as a dam to establish a water level and hence a retention time for settleable solids to separate. Water flowing over the top of this baffle will go directly to the drainage pump. Upstream of this overflow dam, a second baffle will be installed to form an underflow dam for holding floating debris, oil, or other substances for collection and removal prior to flooding the drydock. Both baffles will be removable, and

SEATAC_WOECK024824

provisions will be made to drain off the water held behind them. Settleable solids contained within the cross trench will be removed for land disposal. The baffles will be installed after the ship is secure in the dock and the initial dewatering has been completed. The installation will not minimize the contact of solids with water streams, but is expected to reduce the potential of solids transport.

At one facility (Shipyard F), graving dock discharges, other than dewatering, are directed through a flume prior to emission to the adjacent river. Across this flume, near the discharge end, a floating box-like structure is placed in the flume after dewatering. The box-like structure holds a screen across the surface of the flow to prevent floating trash and debris from entering ambient waters. It is filled with absorbent material which removes oil and grease from the discharge flow. The absorbent material is replaced as needed.

Access In Clean-Up Operations

Two items of drydock design make efforts to clean up industrial wastes, such as abrasive blasting debris, more difficult and costly. They are the height of keel blocks and the existence of raised slides across the floor (or pontoon deck) for movement of bilge blocks.

Almost all existing drydocks have keel block heights of 3-1/2 to 6 feet. Older docks tend to have smaller keel blocks. With short keel blocks the working space between the drydock deck and ship bottom is too restricted for men using shovels and brooms to effectively clean up blasting debris and for using mechanized techniques currently available. This situation is most severe when the ship has a wide beam and a flat bottom. At least one new graving dock, currently under construction, will have 10-foot high keel blocks.

Graving docks and floating drydocks which have bilge block slides present a particularly severe problem to clean-up activities.

These solids establish corners and crevices from which fine debris is difficult to remove. They interfere with the movement of wheeled equipment and increase maintenance costs of the equipment used to clean up blasting debris (such as small front loaders). The positioning of these tracks across the flow direction of launch water may be beneficial, however, in acting as a submerged weir or dam, trapping sediment that would otherwise wash away.

NON-WATER QUALITY ENVIRONMENTAL ASPECTS

The control and treatment technologies described in this section are designed to improve the water quality of drydock discharges. However, some of these technologies also impact, either favorably or

SEATAC_WOECK024825

unfavorably, on other environmental concerns, particularly air pollution and solid waste. This subsection addresses those impacts.

Air Pollution Several control technologies provide alternatives to conventional dry abrasive blasting. These alternatives include wet abrasive blasting, hydroblasting using either steady stream or cavitation, water cone abrasive blasting, closed cycle abrasive blast and recovery equipment, and chemical stripping. Comparison of these alternatives must include many considerations among which are the desirability and thoroughness of surface preparation, speed of application, labor costs, equipment modifications, capital required, occupational health and safety, and effects of possible contamination of water flows. However, all of the alternatives are extremely effective in the reduction or elimination of one of the most detrimental aspects associated with dry abrasive blasting, namely the production of airborne particulates.

Upon impact, abrasive particles fracture. The larger fragments fall to the drydock floor or occasionally to adjacent land or water areas. Smaller fragments, however, become airborne or suspended, along with some particles released from the blasted surface. Depending on the wind, they may travel appreciable distances. Shifting to harder blast media reduces these effects only slightly.

Most of the technologies listed above have been developed more as air pollution control measures than water pollution control measures. Closed-cycle abrasive blast and recovery equipment uses a vacuum to pull blast particles from the air as they are released. This equipment (of which there are several types in various stages of development) is not totally successful in the recovery of blast particles; however, the characteristic plume of dust emanating from dry abrasive blasting is eliminated and the level of airborne particulates and suspended solids is drastically reduced. Wet abrasive blasting and water cone abrasive blasting prevent the production of airborne particles by wetting blast fragments. The moisture-laden fragments then fall to the drydock floor or drip down the structure being blasted. Wet abrasive blasting is a particularly effective means of improving air quality in blasting. Water cone abrasive blasting, though not as effective, still reduces the air pollution problem to a local one involving only the blast nozzle operator and those in the immediate vicinity. Hydroblasting preempts the problem of abrasive fragmentation by eliminating the source, i.e., the abrasive. Only particles from the surface being blasted must be contended with and in hydroblasting, these particles are wet, causing virtually all to drop. Chemical stripping completely eliminates airborne particulates since it involves no blasting. Chemicals are brushed on, allowed to work, then scraped off manually. Because slow, labor-intensive methods are required, chemical stripping is used very little. This technology trades off particulate emission for

SEATAC_WOECK024826

hydrocarbons and other chemical vapors caused by its high volatility. Closed-cycle blasters under development which use steel shot show promise of eliminating essentially all air and water pollution from blasting operations.

Vacuum material handling equipment can be a source of particulate emission where open collection containers are used. The magnitude of this emission depends on the geometry of the collection system, the volume and rate of material being moved, and the material composition, particularly its moisture content and particle weight. Vacuum equipment is ordinarily diesel powered and thereby contributes hydrocarbons, nitrogen oxides, carbon monoxide, and other emissions associated with diesel engine combustion. Mobile units have greater fossil fuel energy requirements than stationary units and thus produce higher levels of air pollution.

A number of the control technologies similarly affect air quality through requirements for power from local combustion equipment. Mobile sweepers and front loaders are examples. Pumping equipment on mobile floating drydocks are usually diesel powered, so that drydock design changes which result in the installation of pumping equipment may add to air emissions. Such design changes include modifying floating drydock pontoons for use as settling tanks, adding filtration equipment or extensive new piping, and other efforts to segregate wastewater flows which require additional pumping. Air emissions may not increase if the pumping requirements are split without increasing input energy requirements. Hydroblasting, by avoiding air as a propellant, reduces air emissions from local air compressor stations. This reduction occurs at the expense of emissions from the alternate compression source. The practice of shutting down shipboard equipment while in drydock also reduces air emissions, in this case, from fossil fueled equipment on board.

Solid Waste

Conventional dry abrasive blasting creates appreciable accumulations of solid waste. Where it is applicable, closed-cycle blast and recovery equipment can greatly reduce the quantity of abrasive required and alleviate the clean up of spent paint and abrasive. Disposal of the material, whether from open or closed-cycle blasting is required. Generally, solid wastes will be transported by a contractor to landfill disposal sites. Though the degree to which the wastes are potentially harmful has not been assessed, several considerations appear warranted. In order to ensure long-term protection of the environment from potentially harmful constituents, special considerations of disposal sites should be made. Landfill sites should be selected which prevent horizontal and vertical migration of constituents to ground or surface waters. In cases where geologic conditions are not suitable adequate mechanical precautions

SEATAC_WOECK024827

(e.g., impervious liners) may be required to ensure long-term protection of the environment. A program of routine periodic sampling and analysis of leachates may be advisable. Where appropriate, the location of solid hazardous materials disposal sites, if any, should be permanently recorded in the appropriate office of legal jurisdiction.

Of particular concern is the disposal of the new organotin wastes. These toxic compounds which are sometimes used in antifouling paints may be present in the spent paint, as well as originating from paint spills and overspray. Currently the Navy, for example, requires that these wastes be sealed in drums and shipped to a properly managed landfill. These precautions are taken to prevent runoff, seepage, and possibly leaching of organotin compounds.

Other Environmental Aspects

In addition to air pollution and solid waste, some of the water control and treatment technologies exhibit minor effects in other environmental areas. The shut down of shipboard services reduces cooling water discharges and consequent thermal pollution. Noise is also reduced. Alternative technologies to dry abrasive blasting which do not employ air as a propellant (hydroblasting and wet abrasive blasting) reduce the load on shore-based air compressors and less heat is added to the water. Thermal discharges from this source are thus reduced. Vacuum material handling equipment and other engine-driven equipment (closed cycle abrasive blast and recovery equipment, mobile sweepers, front loaders, etc.) add to the general noise level in the drydocks.

SEATAC_WOECK024828

SECTION VIII

COST OF TREATMENT AND CONTROL TECHNOLOGY

INTRODUCTION

The economics of currently applied treatment and control technology were obtained during shipyard visits. The technologies, as listed in Section VII, include:

- Technologies for the clean up of abrasive
- Alternatives to conventional dry abrasive blasting
- Control technologies for wastewater flows excluding sewage
- Treatment technologies for wastewater flows excluding sewage

The costs of clean-up and best management practices were developed from information obtained during visits to shipyards A through G. These represent a composite of costs for these seven facilities, and are not specific to any one of them. This information was obtained during the period March through May of 1976 and has not been adjusted for inflation occurring since that period.

The reported and observed application of these technologies appears in Table VII-2. Clean up of abrasive is practiced at each of the shipyards visited and has been for many years. Much cost information is available concerning technology for the clean up of abrasive. With the exception of scupper boxes and piping, and design features for the control of gate leakage and hydrostatic relief water, the other treatment and control technologies have found little application among the shipyards visited. Many of these technologies are in the planning, research, or experimental stages of development and could not be evaluated with respect to economics since actual cost data (particularly operation and maintenance costs) are unavailable. The cost data applies to current technologies for the clean up of abrasive as reported and observed during the shipyard visit program. Developmental methods are not considered.

Throughout the history of conventional dry abrasive blasting, it has been necessary for shipyards which use appreciable amounts of abrasive in their docks to clean it up periodically solely to continue in business. Abrasive on the drydock floor can adversely affect working conditions and productivity. It can hamper the placement and movement of bilge blocks. It hampers the movement of mechanized equipment. Consequently, shipyards have performed periodic clean up of abrasive from the drydock floor. However, in 1974, the EPA, through its

SEATAC_WOECK024829

National Field Investigations Center in Denver, Colorado, recommended that shipyards increase their efforts to prevent wastewaters from contacting abrasive on the drydock floor and to clean up to "broom clean" conditions prior to flooding or sinking.

Response to EPA's recommendations has been mixed. It is very difficult to segregate clean-up costs for environmental purposes at these shipyards and those costs which would have been incurred during the normal course of business. The estimated costs developed here reflect stepped up efforts to reduce effluent discharges to nearby water bodies. But no effort is made to isolate the cost of these stepped up efforts. Costs presented later in this section are total costs of clean-up operations as currently performed.

The cost data include capital, labor, operating, and maintenance costs incurred directly during clean-up operations. Certain indirect costs could not be estimated accurately and are not included. A thorough clean up of drydock floor space, trenches, tunnels, and altars can lead to increased drydock time per ship. If such time is allowed for in contract arrangements with shipowners, busy shipyard operators may find that they cannot service as many ships per year and must correspondingly suffer a drop in revenue. If increased time for clean-up activities is not allowed for, the shipyard is faced with the loss in revenue or additional charges to the ship owner. Frequently at shipyards in this position, complete clean up prior to flooding is not performed. Either way, time delays create dissatisfied customers, and can harm shipyard reputations and good will as well as current and future business prospects. These are important considerations which can produce hidden costs not recognized as clean-up related.

On the other hand, the clean up of abrasive prior to flooding may provide some economic benefits. When abrasive blasting has been particularly heavy, collection of the abrasive may be required to profitably carry out repair operations on a vessel. Thus, increased clean-up efforts may provide benefits as well as increase costs. However, this section does not present a cost/benefit analysis of the operation. Only those costs are included that directly result from the clean-up methods discussed.

IDENTIFICATION OF METHODOLOGY CURRENTLY USED IN BEST MANAGEMENT PRACTICES

Best Management Practices, previously defined, are directed toward clean up within the dock working area and control of water and wastewater flows into and out of the dock. Wide differences are found between facilities and conditions in facilities, and as a result of these differences, Best Management as practiced at one dock may be either inadequate or unnecessarily extensive if applied to another dock.

SEATAC_WOECK024830

Any attempt to define a total cost of Best Management and to apply this to specific facilities is misleading because of the differences encountered. A preferred approach to defining cost is to evaluate costs of individual operations, which can be applied in Best Management Practices, and normalize these to a standard application time, or extent. From such data the costs of Best Management can then be synthesized for individual docks depending upon the specific operations of Best Management required and the time or extent of these operations. This approach admittedly will not permit an exact definition of costs because the components going into the values will not account for variations between facilities, for example labor rates. However, it will be possible to compare the costs attributed to different degrees of Best Management Practices for any given facility and to determine combinations of operations which may achieve equivalent results at reduced expenditures.

Only costs associated with routine clean-up operations of Best Management Practices are considered here. Costs resulting from events such as oil and paint spills are not due to normal operations and are not incurred on a regular basis. The operations considered, in principal, can be applied in any facility but all would not necessarily be applied at any given facility.

The cost of segregation and control of water and wastewater flows is not addressed. Most such efforts require structural modifications to the facility. This aspect of Best Management Practices is dock specific. Differences in facility ages, construction, size and configuration, and geologic and meteorologic conditions prohibit any valid effort to generalize with respect to costs of modifications needed to achieve water and wastewater segregation and control.

Clean-up operations for which costs are estimated here include both mechanical and manual techniques. Mechanical operations use front loaders, sweepers, backhoes, vacuum equipment, and closed cycle blasting. Worker use of shovels, brooms, and hoses are manual operations and in some cases are needed in combination with mechanical methods.

UNIT COSTS OF BEST MANAGEMENT PRACTICES

The elements of cost which combine to make up the costs associated with Best Management Practices include capital investment and depreciation, operating and maintenance costs for equipment, labor costs (with overhead), and contract costs where contractual arrangements are made. When equipment is used for multiple purposes, only one of which relates to the clean-up operations, the cost attributed to management practices must be prorated on the basis of the fractional time so used.

SEATAC_WOECK024831

The approach used in this section has been to define the costs associated with methodologies used for clean up. These costs have been normalized to one eight-hour shift. For comparing various techniques which may be used in an existing facility, the unit costs per shift will be multiplied by the number of shifts required for the cleanup cycle.

Clean-up techniques and methodologies included in this breakdown involve use of front loader, mechanical sweeper, vacuum equipment, and backhoe operations. Labor costs for support of these operations, as opposed to the direct operation costs, are separately identified and in most instances represent manual operations when considered alone. Disposal costs are estimated on the basis of unit volume.

Table VIII-1 summarizes the clean-up methodologies which may be used to implement Best Management Practices. The applicability of each method is shown. Where the cost of equipment or method varied due to the presence of raised bilge block slides, two entries have been made to allow for this effect. This has been done because of the higher maintenance costs and life of mechanical equipment subjected to operation over raised bilge block slides. Under these conditions, depreciation over a three year period is used as opposed to eight years for service in a dock having a smooth floor.

Table VIII-2 shows an estimated cost of solid waste removal from shipyards.

SEATAC_WOECK024832

Table VIII-1. UNIT COSTS OF SELECTED OPERATIONS WHICH MAY BE USED IN BEST MANAGEMENT PRACTICES

	Large Front Loader		Small Front Loader		Mechanical Sweepers			
	Smooth Dock Floor	Raised Ridge Block Slides	Smooth Dock Floor	Raised Ridge Block Slides	Large	Small	Backhoe	Supporting Crane Operations
Capital Equipment Cost	$15,000	$15,000	$8,000	$8,000	$35,000	$1,000	$15,000	NA
Depreciation Period, Yrs	8	3	8	3	8	8	8	NA
Annual Depreciation	$ 1,875	$ 5,000	$1,000	$2,667	$ 4,375	$ 375	$ 1,875	NA
Depreciation Chargeable to one 8 hr shift	$ 1.71	$ 4.57	$0.91	$2.44	$ 4.00	$0.34	$ 1.71	NA
Operating Labor								
Skill Level	Operator	Operator	Operator	Operator	Operator	Operator	Operator	Operator / Ripper
Number of Operators	1	1	1	1	1	1	1	1 / 2
Hourly Rate with Overhead	$11.80	$11.80	$11.80	$11.80	$11.80	$11.80	$11.80	$ 17.00 / $ 10.0
Cost per 8 hr shift	$94.40	$94.40	$94.40	$94.40	$94.40	$94.40	$94.40	$136.00 / $160.00
Operating and Maintenance Cost								
Annual Maintenance	$ 1,500	$ 3,000	$ 800	$ 1,600	$ 5,250	$ 600	$ 2,250	NA
Maintenance Chargeable to one 8 hr shift	$ 1.37	$ 2.74	$ 0.73	$ 1.46	$ 4.79	$ 0.55	$ 2.05	NA
Fuel, Oil, etc. per 8 hr shift	$20.00	$20.00	$13.00	$13.00	$26.00	$13.00	$13.00	NA
Cost of Operation	$117.48/ Shift	$121.71/ Shift	$109.04/ Shift	$111.30/ Shift	$129.19/ Shift	$108.29/ Shift	$111.16	$37.00/hr
Purpose of Operation	Cleanup of Debris		Cleanup of Debris		Cleanup of Spent Paint and Abrasive		Cleanup of Debris from Drainage Trenches	Move Equipment and Containers
Additional Support Services Required, Not Included in Cost of Operation	Shovellers, Crane	Shovellers, Crane	Shovellers, Crane	Shovellers, Crane	Crane	Crane	Crane	NA

Manual Support Operations

	Shoveling	Sweeping	Hosing		Tunnel Cleanout Preparation	Tunnel Cleanout Cleanout
Operating Labor Costs						
Skill Level	Shovelers	Sweepers	Nozzle men	Assistants	Electrical/Mechanical	Shovelers
Number of Operators	1	1	2	2	4	5
Hourly Rate with Overhead	$8.90	$8.90	$8.90	$8.90	$9.00	$8.90
Cost per 8 hr shift	$71.20	$71.20	$142.40	$142.40	$288.00	$356.00
Cost of Operation	$71.20/ Shift	$71.20/ Shift	$284.80/Shift		$288.00/Shift	$356.00/ Shift
Purpose of Operation	Cleanup of Spent Paint and Abrasive from Dock Floor				Lighting and Ventilation in Tunnels	Cleanout of Accumulated Debris from Tunnel

Note: (1) NA - Not Applicable (2) Cost data as of March to May, 1976

SEATAC_WOECK024833

Table VIII-2. COST OF DISPOSAL OF SOLID WASTE REMOVED FROM DOCKS (INCLUDES HAULING AND LANDFILL FEES)

	Tons of Debris Per Ship	Volume Cubic Yds	Number of Containers	Total Cost $ per Clean Up
Light Blasting	200	128	8	1,000
Heavy	1,350	862	53	6,625

Notes:

1. Cost Data as of March to May, 1976.
2. Bulk Density assumed 116 lb/cu ft.
3. Standard container has 16.4 cubic yard volume.
4. Cost per standard container is $125 for removal and disposal.

In using the costs presented in Tables VIII-1 and VIII-2 the operations required for best management techniques can be synthesized. Where mechanical equipment has been defined, only the cost of operating the equipment is included. Additional costs resulting from the need for shovellers to work in conjunction with front loaders (or for crane operation to move machinery and collected debris to and from the dock) must be added to define total cost of each operation. Finally, these costs are approximate and do not reflect regional variations, and are based on costs prevailing during the conduct of this study in 1976.

COSTS ATTRIBUTED TO BEST MANAGEMENT PRACTICES VS. ENVIRONMENTAL COSTS

Regardless of other considerations clean up of graving docks and floating drydocks must be performed at some time simply to permit the repair and maintenance operations to be carried out. Some facilities may find frequent clean up a necessary part of their total work effort, while others may routinely go for long time periods between clean up. Cost of clean up performed as normal maintenance cannot be considered environmental charges.

Likewise, the cost of implementing a formal Best Management Practices program cannot be charged entirely to environmental restrictions. Such a program would be directed toward the management objectives, and these are primarily for operational purposes. It is possible that an

SEATAC_WOECK024834

actual cost benefit may be realized as a result of a formal program to remove wastes at regular times, but a detailed cost analysis would be necessary to demonstrate the actual effect.

Only two operations have been identified which, in some instances, may represent environmental costs: (1) implementation of a management program requiring clean up at a frequency in great excess of that necessary to achieve Best Management Practices, (2) costs incurred as a result of special solids disposal methods required solely for environmental protection.

In the first of these, only such costs resulting from the excess practices imposed could be related to environmental concern. In the more probable case such a program would be adopted at the discretion of the facility management. Only where local regulations may be stringent enough to force this type of program could part of it be attributed to protecting the environment.

The second example is more clear cut. In general contractual arrangements are in force for ultimate disposal of abrasive blasting debris. This material most frequently is landfilled. Many landfills are regulated to prevent contamination of ground and surface waters by the materials disposed of in them. Some are not. It may be necessary, in certain cases, to alter disposal practices by changing to certified land fills in order to prevent potential damage to groundwater by leaching constituents from abrasive blasting debris. In particular, the disposal of organotin-based debris has been controlled by Naval policies which require that it be sealed in steel drums. Costs resulting from these practices may be considered environmentally incurred.

In summary, shipyards which are currently operating under Best Management Practices programs probably will experience no adverse effects in terms of excessive costs or reduced operations. Where increased effort is necessary by other shipyards to achieve Best Management Practices, minor effects may be noted.

SEATAC_WOECK024835

SECTION IX

ACKNOWLEDGEMENTS

The Environmental Protection Agency expresses appreciation for the support in preparing this document provided by Hittman Associates, Inc., Columbia, Maryland, under the overall direction of Mr. Burton C. Becker, Vice President, Operations. Mr. Dwight B. Emerson and Mr. Jack Preston Overman shared direction of the day-to-day work on the project.

Appreciation is extended to the staff of the Environmental Engineering Department of Hittman Associates for their assistance during this program. Specifically our thanks to:

Mr. V. Bruce May, Senior Chemical Engineer
Ms. Barbara A. White, Manuscript Coordinator
Mr. Thomas V. Bolan, III, Mechanical Engineer
Mr. Craig S. Koralek, Chemical Engineer
Mr. Phillip E. Brown, Environmental Engineer
Mr. J. Patrick Carr, Consultant, U.S. Navy (Ret.)

Acknowledgement and appreciation is given to Mr. Robert Blaser, Hamilton Standard, Division of United Technologies Corporation, who made an invaluable contribution to the preparation of this document.

Acknowledgement and appreciation is also given to Mr. Harold B. Coughlin, Chief, Guidelines Implementation Branch, Effluent Guidelines Division, for administrative support and to Ms. Kaye Starr, Ms. Nancy Zrubek, and Ms. Carol Swann for their tireless and dedicated effort in this manuscript.

SEATAC_WOECK024836

SECTION X

REFERENCES AND BIBLOIGRAPHY

REFERENCES

1. Hamilton Standard, Inc., Draft Development Document for Effluent Limitations Guidelines and Standards of Performance for the Machinery & Mechanical Products Manufacturing Point Source Category, EPA Contract No. 68-01-2914, Washington, DC, June 1975.

2. U.S. Environmental Protection Agency, Rationale for Water Pollution Control at Shipbuilding and Ship Repair Facilities, National Field Investigations Center, Denver, Colorado, August 1974.

3. U.S. Department of the Navy, Design Manual-Drydocking Facilities, DM-29, Naval Facilities Engineering Command, Alexandria, Virginia, February 1974.

4. Automation Industries, Inc., Environmental Impact Assessment of Floating Drydocks Operated by the U.S. Navy, Vitro Laboratories Division, Silver Spring, Maryland, May 1975.

5. Engineering-Science, Inc., Pollutional Effects of Drydock Discharges, Berkeley, California, October 1973.

6. Moffatt & Nichol, Engineers, Industrial Waste and Ship Wastewater Collection and Disposal Facility: Drydocks 1, 2, and 3, Long Beach Naval Shipyard, Long Beach, California, November 1975.

7. Birnbaum, Bruce, Experimental Grit Blasting of the U.S.S. James Monroe (SSBN 662) Aboard the U.S.S. Alamagordo (ARDM 2) at Naval Weapons Station, Charleston, South Carolina, Naval Ship Engineering Center, Hyattsville, Maryland, October, 1975.

8. U.S. Department of the Navy, Final Environmental Impact Statement: Abrasive Blasting of Naval Ships' Hulls, Washington, DC, November 1975.

9. Ticker, A. and Rodgers, S., Abatement of Pollution Caused by Abrasive Blasting; Status in Naval Shipyards, Report 4549, Naval Ship Research and Development Center, Bethesda, Maryland, July 1975.

SEATAC_WOECK024837

10. U.S. Department of Navy, "Military Specification: Sand, Sandblast; and Grain, Abrasive - Ship Hull Blast Cleaning," Military Specification MIL-S-22262 (Ships), Washington, DC, December 4, 1959.

11. Alig, Craig S., Long Beach Naval Shipyard Drydock Wastewater Discharge Study, Report 4557, Naval Ship Research and Development Center, Bethesda, Maryland, December 1975.

12. Marks, Earl E., "Report on the Application and Use Experience of the VAC-ALL Grit Removal Machine," Code 971, Long Beach Naval Shipyard, Long Beach, California, 1974.

13. Conn, Andrew F. and Rudy, S. Lee, Parameters for a Ship Hull Cleaning System Using the CAVIJETTM Cavitating Water Jet Method, Hydronautics, Inc., Laurel, Maryland, July 1975.

14. Ray, T.B., "Water Pollution Control Plant," submitted to the State of Virginia Water Control Board as a requirement of NPDES Permit #VA 4804, Newport News Shipbuilding and Drydock Co., Newport News, Virginia, 1975.

15. U.S. Environmental Protection Agency. Draft Report to the San Diego Regional Water Quality Control Board on Guidelines for the Control of Shipyard Pollutants, National Field Investigations Center, Denver, Colorado, July 1, 1974.

16. Carr, Dodd S. and Kronstein, Max, "Antifouling Mechanism of Shipbottom Finishes," Modern Paint and Coatings, Palmerton Publishing Co., New York, New York, December 1975, pp. 23-27.

17. Barry, Joseph N., "Staff Report on Wastes Associated with Shipbuilding and Repair Facilities in San Diego Bay," California Regional Water Quality Control Board, San Diego Region, San Diego, California, June 1972.

SEATAC_WOECK024838

BIBLIOGRAPHY

1. Academy of Natural Sciences of Philadelphia, "Summary of Leaching Study for Sun Shipbuilding and Dry Dock Company," Division of Limnology and Ecology, Philadephia, Pennsylvania, 1974.

2. Alig, Craig S., Long Beach Naval Shipyard Drydock Wastewater Discharge Study, Report 4557, Naval Ship Research and Development Center, Bethesda, Maryland, December 1975.

3. Automation Industries, Inc., Environmental Impact Assessment of Floating Drydocks Operated by the U.S. Navy, Vitro Laboratories Division, Silver spring, Maryland, May 1975.

4. Barry, Joseph N., "Staff Report on Wastes Associated With Shipbuilding and Repair Facilities In San Diego Bay," California Regional Water Quality Control Board, San Diego Region, San Diego, California, June 1972.

5. Birnbaum, Bruce, Experimental Grit Blasting of the U.S.S. James Monroe (SSBN 622) Aboard the U.S.S. Alamagordo (ARDM 2) at Naval Weapons Station, Charleston, South Carolina, Naval Ship Engineering Center, Hyattsville, Maryland, October, 1975.

6. California Air Resources Board, "Abrasive Blasting, Title 17, California Administrative Code, Subchapter 6, State of California, Sacramento, California, February 3, 1976.

7. California Water Resources Control Board, Water Quality Control Plan for Ocean Waters of California, State of California, Sacramento, California, July 6, 1972.

8. Chan, D.B. and Saam, Richard D., "Drydock Wastewater Treatment Study," U.S. Navy, Civil Engineering Laboratory, Construction Battalion Center, Port Hueneme, California, June 1975.

9. Conn, Andrew F. and Rudy, S. Lee, Parameters for a Ship Hull Cleaning System Using The CAVIJETTM Cavitating Water Jet Method, Hydronautics, Inc., Laurel, Maryland, July 1975.

10. Engineering-Science, Inc., Lower James River Basin Comprehensive Water Quality Management Study, Planning Bulletin 217-B, State of Virginia Water Control Boad, Richmond, Virginia, July 1974.

11. Engineering-Science, Inc., Pollutional Effects of Drydock Discharges, Berkeley, California, October 1973.

SEATAC_WOECK024839

12. Hamilton Standard, Inc., Draft Development Document For Effluent Limitations Guidelines and Standards of Performance for the Machinery & Mechanical Products Manufacturing Point Source Category, EPA Contract No. 68-01-2914, Washington, DC, June 1975.

13. Huggett, R.J., Analyses of Sediment and Elutriate Samples from the James River, Virginia, Virginia Institute of Marine Science, Gloucester Point, Virginia, July 1975.

14. Huggett, R.J., Study of Channel Sediments: Baltimore Harbor, Norfolk Harbor, York Entrance Channel, Virginia Institute of Marine Science, Gloucester Point, Virginia, 1972.

15. Hurst, W. Calvin and Whiteneck, L.L., An Analysis of the Impact From Completion of Yard Modernization, Todd Shipyards Corporation, Los Angeles Division, San Pedro, California, Berths 103-109, Engineering Feasibility Studies, Inc., Los Angeles, California, April 1975.

16. Johnson, Patricia G. and Villa, Orterio, Jr., Distribution of Metals In Baltimore Harbor Sediments, Technical Report 59, U.S. Environmental Protection Agency, Annapolis Field Office, Annapolis, Maryland, 1974.

17. Marks, Earl E., "Report on the Application and Use Experience of the VAC-ALL Grit Removal Machine," Code 971, Long Beach Naval Shipyard, Long Beach, California, 1974.

18. Moffatt & Nichol, Engineers, Industrial Waste and Ship Wastewater Collection and Disposal Facility: Drydocks 1, 2 and 3, Long Beach Naval Shipyard, Long Beach, California, November 1975.

19. Newport News Shipbuilding and Dry Dock Company, "EPA Survey of Wastewater Discharge from Graving #10 During the Repair and Painting of the SS Claude Conway, May 1975," Laboratory Services Report No. N-5327, Newport News, Virginia, December 5, 1974.

20. Partek Corporation of Houston, "Partek Liqua-Blaster TM," Houston, Texas, 1976.

21. Pennington, J.C., untitled letter to T.B. Ray at Newport News Shipbuilding and Dry Dock Company, U.S. Environmental Protection Agency, National Field Investigations Center, Denver, Colorado, August 1974.

22. Price, R.A., "Texstar, Inc. Automatic Descaling Equipment Demonstration at Avondale Shipyards, Inc.," memorandum, Avondale Shipyards, Inc., New Orleans, Louisiana, June 24, 1975.

SEATAC_WOECK024840

23. Fay, T.B., "Comments on the Draft Development Document for Machinery and Mechanical Products Manufacturers," letter to the U.S. Environmental Protection Agency, Newport News Shipbuilding and Dry Dock Co., Newport News, Virginia, August 1975.

24. Ray, T.B., "Water Pollution Control Plan," submitted to the State of Virginia Water Control Board as a requirement of NPDES Permit #VA 0004804, Newport News Shipbuilding and Dry Dock Co., Newport News, Virginia 1975.

25. Ticker, A. and Rodgers, S., Abatement of Pollution Caused by Abrasive Blasting; Status in Naval Shipyards, Report 4549, Naval Ship Research and Development Center, Bethesda, Maryland, July 1975.

26. Shierman, E.G., A Demonstration of the Myers-Sherman Vactor Model 700, U.S. Navy, Long Beach Naval Shipyard, Long Beach, California, 1975.

27. U.S. Congress, Current Status of Shipyards, 1974 - Part 2, hearings before the Seapower Subcommittee of the Committee on Armed Services, House of

28. U.S. Department of Commerce and U.S. Department of Defense, Principal Shipbuilding and Repair Facilities of the United States, Naval Sea Systems Command, Washington, DC, 1970.

29. U.S. Department of Defense, "Military Specification: Paint, Antifouling, Vinyl-Red (Formula No. 121/63), Military Specficiation MIL-P-15931B, Amendment 2, Washington, DC, April 13, 1970.

30. U.S. Department of Defense, "Military Specification: Primer Coating, Shipyard, Vinyl-Red Lead (Formula 119), Military Specification MIL-P-15929C, Washington, DC, October 24, 1972.

31. U.S. Department of the Navy, Design Manual - Drydocking Facilities, DM-29, Naval Facilities Engineering Command, Alexandria, Virginia, February 1974.

32. U.S. Department of the Navy, Docking Instructions and Routine Work in Drydock, Naval Ships' Technical Manual Chapter 9070, Naval Sea Systems Command, Washington, DC, November 1, 1972.

33. U.S. Department of the Navy, Environmental Protection Manual, OPNAV Instruction 6240.3, Office of the Chief of Naval Operations, Washington, DC, 1975.

SEATAC_WOECK024841

34. U.S. Department of the Navy, Final Environmental Impact Statement: Abrasive Blasting of Naval Ships' Hulls, Naval Sea Systems Command, Washington, DC, November 1975.

35. U.S. Department of the Navy, "Military Specification: Sand, Sandblast; and Grain, Abrasive - Ship Hull Blast Cleaning," Military Specification MIL-S-22262 (Ships), Washington, DC, December 4, 1959.

36. U.S. Department of the Navy, "'Mini Scope': Shipalt ARD-193, Industrial Waste Disposal,: Boston Naval Shipyard, Code 2060.2, Boston, Massachusetts, September 12, 1975.

37. U.S. Department of the Navy, P-174 Drydock Water Pollution Abatement, Fiscal Year - 1979, Military Construction Program, Long Beach Naval Shipyard, Long Beach, California, May 1, 1976.

38. U.S. Department of the Navy, "Revised Sandblasting Procedures," Naval Ships' Technical Manual Chapter 9190, Amendment 1, Naval Sea Systems Command, Washington, DC, August 1, 1975.

39. U.S. Department of the Navy, A Study of Sediments and Soil Samples From Pearl Harbor Area, Facilities Engineering Command, Civil Engineering Laboratory, Port Hueneme, California, March 1973.

40. U.S. Environmental Protection Agency, "Determination of Metals in Salt Water by Atomic Absorption," National Field Investigations Center, Denver, Colorado, 1974.

41. U.S. Environmental Protection Agency, Draft Report to the San Diego Regional Water Quality Control Board on Guidelines for the Control of Shipyard Pollutants, National Field Investigations Center, Denver, Colorado, July 1, 1974.

42. U.S. Environmental Protection Agency, Rationale for Water Pollution Control at Shipbuilding and Ship Repair Facilities, National Field Investigations Center, Denver, Colorado, August 1974.

43. U.S. Environmental Protection Agency, "Study Plan for Shipyard Field Survey, Newport News, Virginia," National Field Investigations Center, Denver, Colorado, May 1974.

44. Virginia Institute of Marine Science, Study of Channel Sediments, James River and Hampton Roads Area, Gloucester Point, Virginia, August 1971.

SEATAC_WOECK024842

45. Carr, Dodd S. and Kronstein, Max, "Anti-fouling Mechanism of Shipbottom Finishes," Modern Paint and Coatings, Palmerton Publishing Co., New York, New York December 1975, pp. 23-27.

46. "At Last, A Lasting Bottom Paint," Washington Star News, Washington, DC, April 4, 1976.

47. "Bay's Project on Schedule," World Dredging and Marine Construction, Symcon Publishing Co., San Pedro, California, April 1976, p. 8.

48. Hassani, Jay J. and Millard, Charles F., "Graving Dock for 300,000-Ton Ships," Civil Engineering, American Society of Civil Engineers, New York, New York, June 1971.

49. "Navy Device Soaks Up Spilled Oil," Navy Times, Washington, DC, April 12, 1976, p. 44.

50. "New Paint Keeps Barnacles At Bay," Navy Times, Washington, DC, April 19, 1976, p. 3.

51. Clark, Allen, "Shipyard Problems with Oily Wastes," Proceedings of the International Conference on Waste Oil Recovery and Reuse, February 12-14, 1974, Information Transfer, Inc., Rockville, Maryland, 1974.

52. United States Department of Defense and Department of Commerce, Principal Shipbuilding and Repair Facilities of the United States, Office of the Coordinator for Ship Repair and Conversion, Naval Sea Systems Command, September 1, 1978.

SEATAC_WOECK024843

SECTION XI

GLOSSARY

Anticorrosive paints - the initial layer(s) of paint on a ship's hull. The purpose of these paints is to prevent rusting.

Antifouling paints - the final layer(s) of paint applied to a ship's hull. They inhibit the growth of marine organisms on a ship's hull.

Bare Metal - hull metal that has had all paint and marine organisms abraded in preparation for repainting.

Building Basins - a graving dock used solely for ship construction.

Bilge water - water and oil that collects in the lower hull.

Bilge blocks - side blocks placed on the drydock floor. They are located according to the dimensions specific to a particular ship and help stabilize and support the drydocked ship.

Bilge block slides - raised lateral tracks built into many older docks, used to move and position bilge blocks.

Broomed clean - see "Scraped or Broomed clean".

Closed cycle blaster - a type of abrasive blaster that reuses abrasive, usually steel shot, and often collects removed paint and marine organisms.

Cooling water - non-potable water used for shipboard purposes such as air-conditioning and condenser cooling during the drydocked period.

Deflooding - the pumping out of the flooded (filled) drydocks.

Dewatering - see deflooding.

Dock leakage - hydrostatic relief water, gate seepage, and other water leakage other than ship originating wastes that leak into the dock floor.

Drainage discharge - the daily effluent from a drydock. This does not include deflooding water.

Dregs - silt, grit, or other particles deposited on a dock floor during dewatering.

SEATAC_WOECK024844

Dry abrasive blasting - a process to remove paint, rust, and marine organisms from a ship's hull. The abrasive usually a copper slag or sand, is conveyed in a medium of high pressure air through a nozzle.

Drydock - either a graving dock or a floating drydock. Also to place a ship in drydock.

Flap gate - a rigid one piece gate hanged at the bottom.

Floating - raising of a submerged floating drydock.

Floating caisson gate - the most common type of graving dock gate. It is floatable and can be moved to permit entry and departure of the ship.

Floating drydock - a submersible moveable platform to enable repairs and maintenance of ships out of water.

Flooded dock - the filled dock following flooding.

Flooding - the filling of a graving dock with water to permit entry or departure of a ship.

Flush deck construction - a flat dock floor not having permanent bilge block slides.

Fresh grit - unused abrasive.

Front loaders - a type of machinery, similar to a bull dozer used to scrap collect and transfer spent paint, grit and marine organisms that collect on the dock floor during blasting.

Gate - the closure that separates a graving dock from the harbor. It is removed to permit entry and departure of the ship.

Graving dock - a dry basin, below water level that is used for repair and maintenance of ships.

Grit - abrasive.

Hydroblasting - the use of a high pressure water stream to remove paint, rust, and marine organisms from a ship's hull.

Hydrostatic relief - the water that leaks into a dock through holes and cracks in the floors and walls of a graving dock. This equilibrates groundwater pressure.

SEATAC_WOECK024845

Keel blocks - blocks positioned on the floor of the dock, fitted to match the keel surface of the ship. The drydocked ship is positioned on the blocks.

Launch water - the water in a flooded graving dock.

Manual clean up - use of shovels, brooms, and other equipment which is not power operated to clean the dock floor.

Mechanical clean up - use of machinery, such as front end loaders, mechanical sweepers, or vacuum cleaners to clean the dock floor.

Miter gate - a pair of gate leaves, hinged at the dock walls which swing open to allow passage of a ship into and from a graving dock.

Primer - see "anticorrosive paints."

Sand - often used to describe any dry abrasive.

Sand blast - dry abrasive blasting.

Sand sweep - a light dry abrasive blast used to remove only the outer layers of paint and marine growth from a ships hull.

"Scraped or Broomed Clean" - using shovels, mechanical loaders, mechanical sweepers, or brooms to remove abrasive blasting debris.

Scupper boxes - containers used to collect water that runs off a ship deck.

Shipboard wastes - all effluent discharges originating from a drydocked ship. Included are sanitary wastes, bilge water, cooling water, and cleaning wastes.

Sinking - flooding of caissons and lowering of floating drydock to permit a ship to be positioned over the dock prior to floating of the dock and docking.

Slurry blasting - see "wet abrasive blasting."

Soil chutes - flexible hoses, usually made of rubber coated nylon or canvas used to transfer shipboard wastes from the docked vessel to the appropriate disposal system.

Spent abrasive - used grit and spent paint, rust, and marine organisms that collect on the dock floor during blasting.

SEATAC_WOECK024846

Stripping - see "drainage discharge."

Wash down - the hosing down of the dock, and sides of the ship following docking to remove silt, marine organisms, etc.

Water cone abrasive blasting - a type of blasting that uses a cone of water to surround the stream of air and abrasive as they leave the nozzle.

Wet abrasive blasting - a process to remove paint, rust, and marine growth from ship's hulls, in which high pressure water propels an abrasive.

White metal - see "bare metal."

SEATAC_WOECK024847

TABLE

METRIC TABLE

CONVERSION TABLE

MULTIPLY (ENGLISH UNITS)		by	TO OBTAIN (METRIC UNITS)	
ENGLISH UNIT	ABBREVIATION	CONVERSION	ABBREVIATION	METRIC UNIT
acre	ac	0.405	ha	hectares
acre - feet	ac ft	1233.5	cu m	cubic meters
British Thermal Unit	BTU	0.252	kg cal	kilogram - calories
British Thermal Unit/pound	BTU/lb	0.555	kg cal/kg	kilogram calories/kilogram
cubic feet/minute	cfm	0.028	cu m/min	cubic meters/minute
cubic feet/second	cfs	1.7	cu m/min	cubic meters/minute
cubic feet	cu ft	0.028	cu m	cubic meters
cubic feet	cu ft	28.32	l	liters
cubic inches	cu in	16.39	cu cm	cubic centimeters
degree Fahrenheit	°F	0.555(°F-32)*	°C	degree Centigrade
feet	ft	0.3048	m	meters
gallon	gal	3.785	l	liters
gallon/minute	gpm	0.0631	l/sec	liters/second
horsepower	hp	0.7457	kw	killowatts
inches	in	2.54	cm	centimeters
inches of mercury	in Hg	0.03342	atm	atmospheres
pounds	lb	0.454	kg	kilograms
million gallons/day	mgd	3,785	cu m/day	cubic meters/day
mile	mi	1.609	km	kilometer
pound/square inch (gauge)	psig	(0.06805 psig +1)*	atm	atmospheres (absolute)
square feet	sq ft	0.0929	sq m	square meters
square inches	sq in	6.452	sq cm	square centimeters
ton (short)	ton	0.907	kkg	metric ton (1000 kilograms)
yard	yd	0.9144	m	meter

* Actual conversion, not a multiplier

SEATAC_WOECK024848