TABLE 3-1
SUMMARY OF ACTUAL AIR EMISSION RATES

DEWITT CENTRAL FACILITY 3 January 1st 2012 through January 1st 2013

BURLINGTON RESOURCES OIL & GAS COMPANY LP

			Proposed Allowable Hourly and Annual Emission Rates															
			VOC		NO_X		CO		$PM/PM_{10}/PM_{2.5}$		SO_2		H_2S		CH_2O		Benzene	
EPN	**FIN**	**Description**	**(lb/hr)**	**(T/yr)**	**(lb/hr)**	**(T/yr)**	**(lb/hr)**	**(T/yr)**	**(lb/hr)**	**(T/yr)**	**(lb/hr)**	**(T/yr)**	**(lb/hr)**	**(T/yr)**	**(lb/hr)**	**(T/yr)**	**(lb/hr)**	**(T/yr)**
Normal Operations																		
COMP-01	COMP-01	Compressor Engine 1	0.41	1.80	5.91	25.89	0.38	1.66	0.10	0.44	0.01	0.04	--	--	0.52	2.28	0.003	0.01
FUG	FUG	Site Fugitives	0.78	3.40	--	--	--	--	--	--	--	--	0.000	0.001	--	--	0.01	0.04
REB-1	REB-1	Glycol Reboiler No. 1	0.003	0.01	0.05	0.22	0.04	0.18	0.004	0.02	0.001	0.004	--	--	0.00004	0.0002	0.000001	0.000004
REB-1	DEHY-SV	Glycol Dehy Still Vent	0.10	0.42	--	--	--	--	--	--	--	--	0.001	0.003	--	--	0.004	0.02
FL-1	TK-01 TK-02	Controlled Condensate Tank Emissions	0.38	0.77	--	--	--	--	--	--	--	--	0.00002	0.0001	--	--	0.003	0.003
FL-1	TK-03	Controlled Slop Tank Emissions	0.22	0.04	--	--	--	--	--	--	--	--	--	--	--	--	0.002	0.0004
FL-1	TK-04	Controlled PW Tank Emissions	0.06	0.24	--	--	--	--	--	--	--	--	0.00001	0.00004	--	--	0.0002	0.001
FL-1	TRUCK1	Controlled Condensate Truck Loading	1.97	0.10	--	--	--	--	--	--	--	--	--	--	--	--	0.02	0.001
FL-1	TRUCK2	Controlled Produced Water Truck Loading	0.02	0.004	--	--	--	--	--	--	--	--	--	--	--	--	0.0001	0.00002
FL-1	FL-1	Flare Combustion (normal operations waste gas, assist, and pilot)	0.01	0.04	0.96	2.82	1.94	5.67	--	--	0.03	0.15	0.0001	0.0002	--	--	0.000003	0.00001
TK-AF	TK-AF	Antifreeze Liquid Storage	0.50	0.01	--	--	--	--	--	--	--	--	--	--	--	--	--	--
TK-LO	TK-LO	Lube Oil Liquid Storage	0.0002	0.000002	--	--	--	--	--	--	--	--	--	--	--	--	--	--
TK-SCAV	TK-SCAV	H_2S Scavenger Liquid Storage	<0.01	<0.01	--	--	--	--	--	--	--	--	--	--	--	--	--	--
Scheduled Maintenance, Startup and Shutdown Events																		
COMP-01-SV	COMP-01-SV	Compressor Engine 1 Starter Vent	24.16	0.63	--	--	--	--	--	--	--	--	0.02	0.001	--	--	0.16	0.004
FL-1-SMSS	COMP-01-BD	Compressor Engine 1 Blowdown	0.57	0.01	--	--	--	--	--	--	--	--	0.0004	0.00002	--	--	0.004	0.0001
FL-1-SMSS	FL-1-SMSS	Flare Combustion (Blowdowns waste gas)	--	--	0.21	0.01	0.42	0.01	--	--	0.04	0.002	0.0004	0.00002	--	--	--	--
TK-01 TK-02	TK-01 TK-02	Uncontrolled Condensate Tank Standing Loss Emissions (during flare downtime)	0.00	0.00	--	--	--	--	--	--	--	--	--	--	--	--	0.00	0.00
TK-03	TK-03	Uncontrolled Slop Tank Standing Loss Emissions (during flare downtime)	0.00	0.00	--	--	--	--	--	--	--	--	--	--	--	--	0.00	0.00
TK-04	TK-04	Uncontrolled PW Tank Standing Loss Emissions (during flare downtime)	0.001	0.0001	--	--	--	--	--	--	--	--	--	--	--	--	0.00001	0.000001
		Site-Wide Emissions:	**29.18**	**7.47**	**7.13**	**28.94**	**2.78**	**7.52**	**0.10**	**0.46**	**0.08**	**0.20**	**0.02**	**0.01**	**0.52**	**2.28**	**0.21**	**0.08**

CALCULATION OF COMPRESSOR ENGINE POTENTIAL TO EMIT

DEWITT CENTRAL FACILITY 3 January 1st 2012 through January 1st 2013

BURLINGTON RESOURCES OIL & GAS COMPANY LP

			Engine Ratings			Annual Operating					Potential to Emit (PTE)	
EPN	FIN	Description	Type	Rated Horsepower (hp)	Fuel Consumption (Btu/hp-hr)	Hours (hr/yr)	Pollutant	Emission Factors [a]	Units		Hourly [a] (lb/hr)	Annual [b] (T/yr)
COMP-01	COMP-01	Compressor Engine 1	Caterpillar G3516TALE	1,340	7,405	8,760	CO	0.13	g/hp-hr		0.38	1.66
			Lean Burn				NO_X	2.00	g/hp-hr		5.91	25.89
			Catalyst				$PM/PM_{10}/PM_{2.5}$	0.0099871	lb/MMBtu		0.10	0.44
			AFR Controller				SO_2	10	ppm S		0.01	0.04
							VOC	0.14	g/hp-hr		0.41	1.80
							CH_2O	0.0528	lb/MMBtu		0.52	2.28
							Benzene[c]	0.001	g/hp-hr		0.003	0.01

[a] The Emission Factors for engines COMP-01 for CO, NO_X and VOC are based on vendor data and conservatively represented. The VOC emission factor includes the CH_2O emission factor from AP-42 because the vendor provided information does not include formaldehyde. An example calculation for hourly CO emissions for EPN COMP-01 follows:

CO (lb/hr) = (Rated Horsepower, hp)*(Emission Factor, g/hp-hr)*(1 lb/453.59 g)

CO (lb/hr) = (1340 hp)*(0.13 g/hp-hr)*(1 lb/453.59 g)

= 0.38 lb/hr CO

The PM/PM_{10} and CH_20 Emission Factors for EPN COMP-01 and COMP-02 are from AP-42 Chapter 3. An example calculation for hourly PM emissions for EPN COMP-01 follows:

PM (lb/hr) = (Fuel Consumption, Btu/hp-hr)*(Rated Horsepower, hp)*(1 MMBtu/10^6 Btu)*(Emission Factor, lb/MMBtu)

PM (lb/hr) = (7,405 Btu/hp-hr)*(1,340 hp)*(1 MMBtu/10^6 Btu)*(0.009987 lb/MMBtu)

= 0.10 lb/hr PM

A material balance approach was used to estimate the SO_2 emission rates using the maximum sulfur concentration in the natural gas. H_2S Scavenger liquids are used to bring the fuel gas H_2S concentration below 10 ppm S. An example calculation for hourly SO_2 emissions for EPN COMP-01 follows:

SO_2 (lb/hr) = (Fuel Consumption, Btu/hp-hr)*(Rated Horsepower, hp)/(Lower Fuel Heating Value, Btu/scf)*(Sulfur Content, ppmv)*(1 lb-mol/379 scf)*(32.06 lb S/lb-mol)*(64.06 lb SO_2/32.06 lb S)

SO_2 (lb/hr) = (7,418 Btu/hp-hr)*(276 hp)/(1,235 Btu/scf)*(10 scf S/10^6 scf gas)*(1 lb-mol/379 scf)*(32.06 lb S/lb-mol)*(64.06 lb SO2/32.06 lb S)

= 0.01 lb/hr SO_2

[b] An example calculation for annual CO emissions for EPN COMP-01 follows:

CO (T/yr) = (Hourly PTE, lb/hr)*(Annual Operating Hours, hr/yr)*(1 T/2,000 lb)

CO (T/yr) = (0.38 lb/hr)*(8,760 hr/yr)*(1 T/2,000 lb)

= 1.66 T/yr CO

[c] An example calculation for benzene emission factor (EF) for EPN COMP-01 follows:

Benzene EF (g/hp-hr) = (VOC emission factor, g/hp-hr)*(Benzene AP-42 Emission Factor, lb/MMBtu) / (VOC AP-42 Emission Factor, lb/MMBtu)

Benzene EF (g/hp-hr) = (0.14) * (0.00044 lb/MMBtu) / (0.118 lb/MMBtu)

= 0.001 g/hp-hr

CALCULATION OF SITE FUGITIVES (FIN FUG) POTENTIAL TO EMIT

DEWITT CENTRAL FACILITY 3 January 1st 2012 through January 1st 2013

BURLINGTON RESOURCES OIL & GAS COMPANY LP

Component	Number of Components	Emission Factors [a] (lb/hr-component)	Annual Operating Hours (hr/yr)	Maximum VOC[a] (wt%)	Maximum Benzene[a] (wt%)	Maximum H_2S (wt%)	Reduction Credit [a] (%)	PTE VOC Hourly [b] (lb/hr)	PTE VOC Annual [c] (T/yr)	PTE Benzene Hourly [b] (lb/hr)	PTE Benzene Annual [c] (T/yr)	PTE H_2S Hourly [b] (lb/hr)	PTE H_2S Annual [c] (T/yr)
Valves													
Gas Streams	75	0.00992	8,760	40%	0.65%	0.03%	0%	0.30	1.30	0.005	0.02	0.000	0.001
Light Oil	54	0.0055	8,760	100%	0.98%	--	0%	0.30	1.30	0.003	0.01	--	--
Water/Light Oil	55	0.000216	8,760	--	0.50%	--	0%	0.01	0.05	0.0001	0.0003	--	--
Pumps seals													
Water/Light Oil	3	0.000052	8,760	--	0.50%	--	0%	0.0002	0.001	0.000001	0.000003	--	--
Compressors seals													
Gas Streams	4	0.0194	8,760	40%	0.65%	0.03%	0%	0.03	0.14	0.001	0.002	0.0000	0.0001
Flanges													
Gas Streams	88	0.00086	8,760	40%	0.65%	0.03%	0%	0.03	0.13	0.0005	0.002	0.0000	0.0001
Light Oil	29	0.000243	8,760	100%	0.98%	--	0%	0.01	0.03	0.0001	0.0003	--	--
Water/Light Oil	10	0.000006	8,760	--	0.50%	--	0%	0.0001	0.0003	0.0000003	0.000001	--	--
Connectors													
Gas Streams	123	0.00044	8,760	40%	0.65%	0.03%	0%	0.02	0.09	0.0004	0.002	0.0000	0.0001
Light Oil	113	0.000463	8,760	100%	0.98%	--	0%	0.05	0.23	0.001	0.002	--	--
Water/Light Oil	124	0.000243	8,760	--	0.50%	--	0%	0.03	0.13	0.0002	0.001	--	--
							TOTAL:	**0.78**	**3.40**	**0.01**	**0.04**	**0.000**	**0.001**

[a] Fugitive Emission Factors and Reduction Credits are per TCEQ Technical Guidance Document for Equipment Leak Fugitives, dated October 2000. The emission factors are for total hydrocarbon, except for the emission factors associated with Water/Light Oil. As indicated on page 6 of 55 in the mentioned Guidance document, these factors are based off of a known stream constituency of 50%-99% water, and remainder VOC. Therefore, applying a VOC wt % would be double counting for the reduction due to water.

[b] Hourly VOC emission rates are calculated as follows:

(75 components) * (0.00992 lb/hr-component) * (40% VOC) * (100% - 0% reduction credit) = 0.30 lb/hr

[c] Annual VOC emission rates are calculated as follows:

(75 components) * (0.00992 lb/hr-component) * (8,760 hr/yr) * (40% VOC) * (100% - 0% reduction credit) / (2,000 lb/T) = 1.30 T/yr

CALCULATION OF HEATERS POTENTIAL TO EMIT

DEWITT CENTRAL FACILITY 3 January 1st 2012 through January 1st 2013

BURLINGTON RESOURCES OIL & GAS COMPANY LP

EPN	FIN	Description	Rated Duty (MMBtu/hr)	Operating Annual (hr/yr)	Pollutant	Emission Factor [a]	Unit	Potential To Emit[b] Hourly (lb/hr)	Potential To Emit[b] Annual (T/yr)
REB-1	REB-1	Glycol Reboiler No. 1	0.50	8,760	CO	84	lb/MMscf	0.04	0.18
					NO_X	100	lb/MMscf	0.05	0.22
					$PM/PM_{10}/PM_{2.5}$ [d]	7.6	lb/MMscf	0.004	0.02
					SO_2 [c]	10.0	ppm H2S	0.001	0.004
					VOC	5.5	lb/MMscf	0.003	0.01
					Benzene	0.0021	lb/MMscf	0.000001	0.000004
					CH_2O	0.075	lb/MMscf	0.00004	0.0002

[a] Unless otherwise noted, emission factors are from AP-42 Tables 1.4-1, 1.4-2, and 1.4-3 (dated 7/98) and are based on a fuel HHV of 1020 Btu/scf.

[b] Example calculations for EPN REB-1 follows:

CO (lb/hr) = (Rated Duty, MMBtu/hr)/(Higher Heating Value, Btu/scf)*(Emission Factor, lb/MMscf)

CO (lb/hr) = (0.50 MMBtu/hr)*) / (1020 Btu/scf) * (84 lb/MMscf)

= 0.04 lb/hr CO

CO (T/yr) = (Hourly Emissions, lb/hr)*(Annual Operating Hours, hr/yr)/(2,000 lb/T)

CO (T/yr) = (0.04 lb/hr)*(8,760 hr/yr)/(2,000 lb/T)

= 0.18 T/yr CO

[c] A material balance approach was used to estimate the SO_2 emission rates using the maximum sulfur concentration in the natural gas. H_2S Scavenger liquids are used to bring the fuel gas H_2S concentration below 10 ppm S.

SO_2 (lb/hr) = (Rated Duty, MMBtu/hr)/(Fuel Heating Value, Btu/scf)*(Sulfure, scf H2S/MMscf gas)*(1 lb-mol/379 scf)*(64.06 lb SO_2/lb-mol S)

SO_2 (lb/hr) = (0.50 MMBtu/hr)/(1448 Btu/scf)*(10.0 scf S/MMscf gas)*(1 lb-mol/379 scf)*(34.065 lb H2S/lb-mol)*(64.06 lb SO2/34.065 lb H2S)

= 0.001 lb/hr SO_2

[d] All PM is assumed to be less than 2.5 microns in diameter per footnote "c" of AP-42 Table 1.4-2.

GLYCOL DEHYDRATOR STILL VENT POTENTIAL TO EMIT

DEWITT CENTRAL FACILITY 3 January 1st 2012 through January 1st 2013

BURLINGTON RESOURCES OIL & GAS COMPANY LP

	Potential to Emit FIN DEHY-SV/EPN REB-1	
Component	**Hourly (lb/hr)**	**Annual (T/yr)**
Hydrogen Sulfide	0.0008	0.0032
Methane	0.0748	0.3276
Ethane	0.0312	0.1367
Propane	0.0248	0.1089
Isobutane	0.0084	0.0364
n-Butane	0.0151	0.0660
Isopentane	0.0079	0.0346
n-Pentane	0.0074	0.0323
n-Hexane	0.0041	0.0175
Cyclohexane	0.0029	0.0126
Other Hexanes	0.0076	0.0333
Heptanes	0.0038	0.0162
Benzene	0.0037	0.0161
Toluene	0.0066	0.0291
Ethylbenzene	0.0002	0.0006
Xylenes	0.0014	0.0057
C8+ Heavies	0.0014	0.0060
Total VOC	**0.0953**	**0.4153**

Note: The emissions from the pressurized flash tank and the condenser vent are routed to the reboiler, which will be running continuously with a 98% combustion efficiency. In the event that the reboiler can not handle the total volume of recycled gas to it, the remainder will be re-directed to flare with a 98% combustion efficiency. Accounting for both the max heater combustion and the max waste gas flare combustions is a built in conservative assumption such that both would not be running at max at the same time.

GRI-GLYCalc VERSION 4.0 - SUMMARY OF INPUT VALUES

Case Name: DEWITT CENTRAL FACILITY
File Name: T:\ConocoPhillips - 507\507-104 EPA 114 Response\04 DeWitt CF 3\DeWitt CF 3 Dehy.ddf
Date: August 05, 2014

DESCRIPTION:

Description: Burlington Resources Dehy Unit

Annual Hours of Operation: 8760.0 hours/yr

WET GAS:

Temperature: 100.00 deg. F
Pressure: 1000.00 psig
Wet Gas Water Content: Saturated

Component	Conc. (vol %)
Carbon Dioxide	1.5470
Hydrogen Sulfide	0.0500
Nitrogen	0.0660
Methane	68.4160
Ethane	13.7110
Propane	6.9330
Isobutane	1.7130
n-Butane	2.9130
Isopentane	1.3010
n-Pentane	1.1500
n-Hexane	0.4920
Cyclohexane	0.1770
Other Hexanes	0.9950
Heptanes	0.3500
Benzene	0.0570
Toluene	0.0940
Ethylbenzene	0.0020
Xylenes	0.0190
C8+ Heavies	0.0640

DRY GAS:

Flow Rate: 8.1 MMSCF/day
Water Content: 7.0 lbs. H2O/MMSCF

LEAN GLYCOL:

Glycol Type: TEG
Water Content: 1.0 wt% H2O
Recirculation Ratio: 0.8 gal/lb H2O

PUMP:

Glycol Pump Type: Gas Injection
Gas Injection Pump Volume Ratio: 0.080 acfm gas/gpm glycol

FLASH TANK:

Flash Control: Combustion device
Flash Control Efficiency: 98.00 %
Temperature: 180.0 deg. F
Pressure: 35.0 psig

REGENERATOR OVERHEADS CONTROL DEVICE:

Control Device: Condenser
Temperature: 120.0 deg. F
Pressure: 14.0 psia

Control Device: Combustion Device
Destruction Efficiency: 98.0 %
Excess Oxygen: 0.0 %
Ambient Air Temperature: 80.0 deg. F

GRI-GLYCalc VERSION 4.0 - AGGREGATE CALCULATIONS REPORT

Case Name: DEWITT CENTRAL FACILITY
File Name: T:\ConocoPhillips - 507\507-104 EPA 114 Response\04 DeWitt CF 3\DeWitt CF 3 Dehy.
Date: August 05, 2014

DESCRIPTION:

Description: Burlington Resources Dehy Unit

Annual Hours of Operation: 8760.0 hours/yr

EMISSIONS REPORTS:

CONTROLLED REGENERATOR EMISSIONS

Component	lbs/hr	lbs/day	tons/yr
Hydrogen Sulfide	0.0001	0.002	0.0003
Methane	0.0002	0.006	0.0011
Ethane	0.0002	0.006	0.0011
Propane	0.0004	0.011	0.0019
Isobutane	0.0002	0.004	0.0007
n-Butane	0.0003	0.008	0.0014
Isopentane	0.0001	0.002	0.0005
n-Pentane	0.0001	0.002	0.0004
n-Hexane	<0.0001	0.001	0.0002
Cyclohexane	0.0001	0.002	0.0003
Other Hexanes	0.0001	0.002	0.0004
Heptanes	<0.0001	0.001	0.0001
Benzene	0.0004	0.010	0.0019
Toluene	0.0004	0.010	0.0018
Ethylbenzene	<0.0001	<0.001	<0.0001
Xylenes	<0.0001	0.001	0.0002
C8+ Heavies	<0.0001	<0.001	<0.0001
Total Emissions	0.0028	0.066	0.0121
Total Hydrocarbon Emissions	0.0027	0.065	0.0118
Total VOC Emissions	0.0022	0.053	0.0097
Total HAP Emissions	0.0009	0.022	0.0041
Total BTEX Emissions	0.0009	0.021	0.0039

UNCONTROLLED REGENERATOR EMISSIONS

Component	lbs/hr	lbs/day	tons/yr
Hydrogen Sulfide	0.0048	0.115	0.0210
Methane	0.0122	0.293	0.0534
Ethane	0.0129	0.310	0.0565
Propane	0.0266	0.638	0.1164
Isobutane	0.0112	0.268	0.0490
n-Butane	0.0252	0.605	0.1104
Isopentane	0.0132	0.316	0.0576
n-Pentane	0.0144	0.346	0.0631
n-Hexane	0.0117	0.281	0.0513
Cyclohexane	0.0242	0.581	0.1061
Other Hexanes	0.0171	0.410	0.0748
Heptanes	0.0176	0.423	0.0772
Benzene	0.2294	5.506	1.0049
Toluene	0.5619	13.484	2.4609
Ethylbenzene	0.0165	0.397	0.0725
Xylenes	0.2480	5.952	1.0863
C8+ Heavies	0.0037	0.088	0.0161
Total Emissions	1.2505	30.013	5.4773
Total Hydrocarbon Emissions	1.2457	29.898	5.4563
Total VOC Emissions	1.2206	29.296	5.3464
Total HAP Emissions	1.0675	25.621	4.6758
Total BTEX Emissions	1.0558	25.340	4.6245

FLASH GAS EMISSIONS

Component	lbs/hr	lbs/day	tons/yr
Hydrogen Sulfide	0.0007	0.016	0.0029
Methane	0.0746	1.789	0.3265
Ethane	0.0310	0.743	0.1356
Propane	0.0244	0.586	0.1070
Isobutane	0.0082	0.196	0.0357
n-Butane	0.0148	0.354	0.0646
Isopentane	0.0078	0.187	0.0341
n-Pentane	0.0073	0.175	0.0319
n-Hexane	0.0040	0.095	0.0173
Cyclohexane	0.0028	0.067	0.0123
Other Hexanes	0.0075	0.180	0.0329
Heptanes	0.0037	0.088	0.0161
Benzene	0.0033	0.078	0.0142
Toluene	0.0062	0.150	0.0273
Ethylbenzene	0.0001	0.003	0.0005
Xylenes	0.0013	0.030	0.0055
C8+ Heavies	0.0013	0.032	0.0059
Total Emissions	0.1988	4.770	0.8706
Total Hydrocarbon Emissions	0.1981	4.755	0.8677
Total VOC Emissions	0.0926	2.222	0.4055
Total HAP Emissions	0.0148	0.356	0.0650
Total BTEX Emissions	0.0109	0.261	0.0476

FLASH TANK OFF GAS

Component	lbs/hr	lbs/day	tons/yr
Hydrogen Sulfide	0.0325	0.781	0.1425
Methane	3.7277	89.466	16.3275
Ethane	1.5483	37.160	6.7817
Propane	1.2212	29.309	5.3489
Isobutane	0.4077	9.785	1.7857
n-Butane	0.7376	17.703	3.2308
Isopentane	0.3895	9.349	1.7062
n-Pentane	0.3639	8.733	1.5937
n-Hexane	0.1979	4.751	0.8670
Cyclohexane	0.1405	3.373	0.6155
Other Hexanes	0.3760	9.023	1.6467
Heptanes	0.1837	4.409	0.8047
Benzene	0.1626	3.903	0.7123
Toluene	0.3121	7.490	1.3669
Ethylbenzene	0.0063	0.150	0.0274
Xylenes	0.0629	1.508	0.2753
C8+ Heavies	0.0674	1.617	0.2951
Total Emissions	9.9379	238.509	43.5279
Total Hydrocarbon Emissions	9.9053	237.728	43.3854
Total VOC Emissions	4.6293	111.103	20.2762
Total HAP Emissions	0.7417	17.802	3.2489
Total BTEX Emissions	0.5438	13.051	2.3819

EQUIPMENT REPORTS:

CONDENSER AND COMBUSTION DEVICE

Condenser Outlet Temperature: 120.00 deg. F
Condenser Pressure: 14.00 psia
Condenser Duty: 5.37e-004 MM BTU/hr
Hydrocarbon Recovery: 0.09 bbls/day
Produced Water: 1.17 bbls/day
Ambient Temperature: 80.00 deg. F
Excess Oxygen: 0.00 %

Combustion Efficiency: 98.00 %
Supplemental Fuel Requirement: 5.37e-004 MM BTU/hr

Component	Emitted	Destroyed
Hydrogen Sulfide	1.42%	98.58%
Methane	1.98%	98.02%
Ethane	1.91%	98.09%
Propane	1.65%	98.35%
Isobutane	1.40%	98.60%
n-Butane	1.25%	98.75%
Isopentane	0.78%	99.22%
n-Pentane	0.66%	99.34%
n-Hexane	0.35%	99.65%
Cyclohexane	0.26%	99.74%
Other Hexanes	0.48%	99.52%
Heptanes	0.14%	99.86%
Benzene	0.19%	99.81%
Toluene	0.07%	99.93%
Ethylbenzene	0.02%	99.98%
Xylenes	0.02%	99.98%
C8+ Heavies	0.00%	100.00%

ABSORBER

Calculated Absorber Stages: 1.74
Specified Dry Gas Dew Point: 7.00 lbs. H2O/MMSCF
Temperature: 100.0 deg. F
Pressure: 1000.0 psig
Dry Gas Flow Rate: 8.1000 MMSCF/day
Glycol Losses with Dry Gas: 0.6332 lb/hr
Wet Gas Water Content: Saturated
Calculated Wet Gas Water Content: 58.29 lbs. H2O/MMSCF
Specified Lean Glycol Recirc. Ratio: 0.81 gal/lb H2O

Component	Remaining in Dry Gas	Absorbed in Glycol
Water	12.00%	88.00%
Carbon Dioxide	99.96%	0.04%
Hydrogen Sulfide	99.79%	0.21%
Nitrogen	100.00%	0.00%
Methane	100.00%	0.00%
Ethane	99.99%	0.01%
Propane	99.99%	0.01%
Isobutane	99.99%	0.01%
n-Butane	99.98%	0.02%
Isopentane	99.99%	0.01%
n-Pentane	99.98%	0.02%
n-Hexane	99.98%	0.02%
Cyclohexane	99.91%	0.09%
Other Hexanes	99.98%	0.02%
Heptanes	99.97%	0.03%
Benzene	99.04%	0.96%
Toluene	98.90%	1.10%
Ethylbenzene	98.83%	1.17%
Xylenes	98.30%	1.70%
C8+ Heavies	99.96%	0.04%

FLASH TANK

Flash Control: Combustion device
Flash Control Efficiency: 98.00 %
Flash Temperature: 180.0 deg. F
Flash Pressure: 35.0 psig

Component	Left in Glycol	Removed in Flash Gas
Water	98.18%	1.82%
Carbon Dioxide	2.94%	97.06%
Hydrogen Sulfide	12.85%	87.15%
Nitrogen	0.30%	99.70%

Methane	0.33%	99.67%
Ethane	0.83%	99.17%
Propane	2.13%	97.87%
Isobutane	2.67%	97.33%
n-Butane	3.30%	96.70%
Isopentane	3.40%	96.60%
n-Pentane	3.96%	96.04%
n-Hexane	5.76%	94.24%
Cyclohexane	16.68%	83.32%
Other Hexanes	4.65%	95.35%
Heptanes	8.96%	91.04%
Benzene	60.52%	39.48%
Toluene	67.03%	32.97%
Ethylbenzene	75.34%	24.66%
Xylenes	82.34%	17.66%
C8+ Heavies	11.45%	88.55%

REGENERATOR

No Stripping Gas used in regenerator.

Component	Remaining in Glycol	Distilled Overhead
Water	7.18%	92.82%
Carbon Dioxide	0.00%	100.00%
Hydrogen Sulfide	0.00%	100.00%
Nitrogen	0.00%	100.00%
Methane	0.00%	100.00%
Ethane	0.00%	100.00%
Propane	0.00%	100.00%
Isobutane	0.00%	100.00%
n-Butane	0.00%	100.00%
Isopentane	4.02%	95.98%
n-Pentane	3.99%	96.01%
n-Hexane	3.21%	96.79%
Cyclohexane	13.90%	86.10%
Other Hexanes	6.90%	93.10%
Heptanes	2.55%	97.45%
Benzene	7.98%	92.02%
Toluene	11.45%	88.55%
Ethylbenzene	13.44%	86.56%
Xylenes	15.37%	84.63%
C8+ Heavies	57.90%	42.10%

STREAM REPORTS:

WET GAS STREAM

Temperature: 100.00 deg. F
Pressure: 1014.70 psia
Flow Rate: 3.38e+005 scfh

Component	Conc. (vol%)	Loading (lb/hr)
Water	1.23e-001	1.97e+001
Carbon Dioxide	1.54e+000	6.05e+002
Hydrogen Sulfide	4.99e-002	1.52e+001
Nitrogen	6.59e-002	1.64e+001
Methane	6.83e+001	9.76e+003
Ethane	1.37e+001	3.67e+003
Propane	6.92e+000	2.72e+003
Isobutane	1.71e+000	8.85e+002
n-Butane	2.91e+000	1.51e+003
Isopentane	1.30e+000	8.35e+002
n-Pentane	1.15e+000	7.38e+002
n-Hexane	4.91e-001	3.77e+002

Cyclohexane 1.77e-001 1.32e+002
Other Hexanes 9.93e-001 7.62e+002
Heptanes 3.49e-001 3.12e+002

Benzene 5.69e-002 3.96e+001
Toluene 9.38e-002 7.70e+001
Ethylbenzene 2.00e-003 1.89e+000
Xylenes 1.90e-002 1.79e+001
C8+ Heavies 6.39e-002 9.69e+001
--- --- ---
Total Components 100.00 2.26e+004

DRY GAS STREAM

Temperature: 100.00 deg. F
Pressure: 1014.70 psia
Flow Rate: 3.38e+005 scfh

Component	Conc. (vol%)	Loading (lb/hr)
Water	1.47e-002	2.36e+000
Carbon Dioxide	1.55e+000	6.05e+002
Hydrogen Sulfide	4.99e-002	1.51e+001
Nitrogen	6.60e-002	1.64e+001
Methane	6.84e+001	9.76e+003
Ethane	1.37e+001	3.67e+003
Propane	6.93e+000	2.72e+003
Isobutane	1.71e+000	8.85e+002
n-Butane	2.91e+000	1.51e+003
Isopentane	1.30e+000	8.34e+002
n-Pentane	1.15e+000	7.38e+002
n-Hexane	4.92e-001	3.77e+002
Cyclohexane	1.77e-001	1.32e+002
Other Hexanes	9.94e-001	7.62e+002
Heptanes	3.50e-001	3.12e+002
Benzene	5.64e-002	3.92e+001
Toluene	9.29e-002	7.62e+001
Ethylbenzene	1.98e-003	1.87e+000
Xylenes	1.87e-002	1.76e+001
C8+ Heavies	6.39e-002	9.69e+001
Total Components	100.00	2.26e+004

LEAN GLYCOL STREAM

Temperature: 100.00 deg. F
Flow Rate: 2.33e-001 gpm

Component	Conc. (wt%)	Loading (lb/hr)
TEG	9.89e+001	1.30e+002
Water	1.00e+000	1.31e+000
Carbon Dioxide	1.86e-011	2.44e-011
Hydrogen Sulfide	2.44e-012	3.20e-012
Nitrogen	4.90e-014	6.44e-014
Methane	7.98e-018	1.05e-017
Ethane	9.82e-008	1.29e-007
Propane	9.07e-009	1.19e-008
Isobutane	2.46e-009	3.24e-009
n-Butane	4.42e-009	5.80e-009
Isopentane	4.19e-004	5.50e-004
n-Pentane	4.56e-004	5.99e-004
n-Hexane	2.95e-004	3.88e-004
Cyclohexane	2.98e-003	3.91e-003
Other Hexanes	9.63e-004	1.26e-003
Heptanes	3.51e-004	4.61e-004
Benzene	1.52e-002	1.99e-002
Toluene	5.53e-002	7.26e-002
Ethylbenzene	1.96e-003	2.57e-003
Xylenes	3.43e-002	4.50e-002
C8+ Heavies	3.84e-003	5.04e-003

--- --- ---

Total Components 100.00 1.31e+002

RICH GLYCOL AND PUMP GAS STREAM

Temperature: 100.00 deg. F
Pressure: 1014.70 psia
Flow Rate: 2.93e-001 gpm
NOTE: Stream has more than one phase.

Component	Conc. (wt%)	Loading (lb/hr)
TEG	8.10e+001	1.30e+002
Water	1.17e+001	1.87e+001
Carbon Dioxide	2.85e-001	4.57e-001
Hydrogen Sulfide	2.33e-002	3.73e-002
Nitrogen	4.01e-003	6.41e-003
Methane	2.34e+000	3.74e+000
Ethane	9.75e-001	1.56e+000
Propane	7.79e-001	1.25e+000
Isobutane	2.62e-001	4.19e-001
n-Butane	4.77e-001	7.63e-001
Isopentane	2.52e-001	4.03e-001
n-Pentane	2.37e-001	3.79e-001
n-Hexane	1.31e-001	2.10e-001
Cyclohexane	1.05e-001	1.69e-001
Other Hexanes	2.46e-001	3.94e-001
Heptanes	1.26e-001	2.02e-001
Benzene	2.57e-001	4.12e-001
Toluene	5.91e-001	9.47e-001
Ethylbenzene	1.58e-002	2.54e-002
Xylenes	2.22e-001	3.56e-001
C8+ Heavies	4.75e-002	7.61e-002
Total Components	100.00	1.60e+002

FLASH TANK OFF GAS STREAM

Temperature: 180.00 deg. F
Pressure: 49.70 psia
Flow Rate: 1.47e+002 scfh

Component	Conc. (vol%)	Loading (lb/hr)
Water	4.85e+000	3.40e-001
Carbon Dioxide	2.59e+000	4.43e-001
Hydrogen Sulfide	2.46e-001	3.25e-002
Nitrogen	5.88e-002	6.39e-003
Methane	5.98e+001	3.73e+000
Ethane	1.33e+001	1.55e+000
Propane	7.13e+000	1.22e+000
Isobutane	1.81e+000	4.08e-001
n-Butane	3.27e+000	7.38e-001
Isopentane	1.39e+000	3.90e-001
n-Pentane	1.30e+000	3.64e-001
n-Hexane	5.91e-001	1.98e-001
Cyclohexane	4.30e-001	1.41e-001
Other Hexanes	1.12e+000	3.76e-001
Heptanes	4.72e-001	1.84e-001
Benzene	5.36e-001	1.63e-001
Toluene	8.72e-001	3.12e-001
Ethylbenzene	1.52e-002	6.25e-003
Xylenes	1.52e-001	6.29e-002
C8+ Heavies	1.02e-001	6.74e-002
Total Components	100.00	1.07e+001

FLASH TANK GLYCOL STREAM

Temperature: 180.00 deg. F
Flow Rate: 2.69e-001 gpm

Component	Conc. (wt%)	Loading (lb/hr)	(ppm)
TEG	8.68e+001	1.30e+002	867869.
Water	1.23e+001	1.83e+001	122648.
Carbon Dioxide	8.99e-003	1.34e-002	90.
Hydrogen Sulfide	3.21e-003	4.80e-003	32.
Nitrogen	1.27e-005	1.89e-005	0.
Methane	8.16e-003	1.22e-002	82.
Ethane	8.64e-003	1.29e-002	86.
Propane	1.78e-002	2.66e-002	178.
Isobutane	7.49e-003	1.12e-002	75.
n-Butane	1.69e-002	2.52e-002	169.
Isopentane	9.18e-003	1.37e-002	92.
n-Pentane	1.01e-002	1.50e-002	101.
n-Hexane	8.11e-003	1.21e-002	81.
Cyclohexane	1.88e-002	2.81e-002	188.
Other Hexanes	1.23e-002	1.83e-002	123.
Heptanes	1.21e-002	1.81e-002	121.
Benzene	1.67e-001	2.49e-001	1669.
Toluene	4.25e-001	6.35e-001	4248.
Ethylbenzene	1.28e-002	1.91e-002	128.
Xylenes	1.96e-001	2.93e-001	1962.
C8+ Heavies	5.83e-003	8.71e-003	58.
Total Components	100.00	1.49e+002	1000000.

FLASH GAS EMISSIONS

Flow Rate: 6.27e+002 scfh
Control Method: Combustion Device
Control Efficiency: 98.00

Component	Conc. (vol%)	Loading (lb/hr)
Water	5.99e+001	1.78e+001
Carbon Dioxide	3.96e+001	2.88e+001
Hydrogen Sulfide	1.15e-003	6.51e-004
Nitrogen	1.38e-002	6.39e-003
Methane	2.81e-001	7.46e-002
Ethane	6.23e-002	3.10e-002
Propane	3.35e-002	2.44e-002
Isobutane	8.48e-003	8.15e-003
n-Butane	1.54e-002	1.48e-002
Isopentane	6.53e-003	7.79e-003
n-Pentane	6.10e-003	7.28e-003
n-Hexane	2.78e-003	3.96e-003
Cyclohexane	2.02e-003	2.81e-003
Other Hexanes	5.28e-003	7.52e-003
Heptanes	2.22e-003	3.67e-003
Benzene	2.52e-003	3.25e-003
Toluene	4.10e-003	6.24e-003
Ethylbenzene	7.12e-005	1.25e-004
Xylenes	7.16e-004	1.26e-003
C8+ Heavies	4.78e-004	1.35e-003
Total Components	100.00	4.69e+001

REGENERATOR OVERHEADS STREAM

Temperature: 212.00 deg. F
Pressure: 14.70 psia
Flow Rate: 3.64e+002 scfh

Component	Conc. (vol%)	Loading (lb/hr)
Water	9.84e+001	1.70e+001
Carbon Dioxide	3.18e-002	1.34e-002
Hydrogen Sulfide	1.47e-002	4.80e-003
Nitrogen	7.05e-005	1.89e-005
Methane	7.92e-002	1.22e-002

Ethane	4.47e-002	1.29e-002
Propane	6.28e-002	2.66e-002
Isobutane	2.00e-002	1.12e-002
n-Butane	4.52e-002	2.52e-002
Isopentane	1.90e-002	1.32e-002
n-Pentane	2.08e-002	1.44e-002
n-Hexane	1.42e-002	1.17e-002
Cyclohexane	3.00e-002	2.42e-002
Other Hexanes	2.06e-002	1.71e-002
Heptanes	1.83e-002	1.76e-002
Benzene	3.06e-001	2.29e-001
Toluene	6.35e-001	5.62e-001
Ethylbenzene	1.62e-002	1.65e-002
Xylenes	2.43e-001	2.48e-001
C8+ Heavies	2.24e-003	3.67e-003
Total Components	100.00	1.83e+001

CONDENSER PRODUCED WATER STREAM

Temperature: 120.00 deg. F
Flow Rate: 3.40e-002 gpm

Component	Conc. (wt%)	Loading (lb/hr)	(ppm)
Water	9.99e+001	1.70e+001	998960.
Carbon Dioxide	6.24e-003	1.06e-003	62.
Hydrogen Sulfide	5.80e-003	9.86e-004	58.
Nitrogen	2.50e-007	4.25e-008	0.
Methane	3.14e-004	5.35e-005	3.
Ethane	3.66e-004	6.23e-005	4.
Propane	6.70e-004	1.14e-004	7.
Isobutane	1.31e-004	2.23e-005	1.
n-Butane	3.48e-004	5.92e-005	3.
Isopentane	8.05e-005	1.37e-005	1.
n-Pentane	7.99e-005	1.36e-005	1.
n-Hexane	2.88e-005	4.90e-006	0.
Cyclohexane	2.45e-004	4.17e-005	2.
Other Hexanes	4.60e-005	7.83e-006	0.
Heptanes	9.38e-006	1.60e-006	0.
Benzene	4.75e-002	8.09e-003	475.
Toluene	3.73e-002	6.34e-003	373.
Ethylbenzene	2.76e-004	4.69e-005	3.
Xylenes	4.55e-003	7.74e-004	45.
C8+ Heavies	3.11e-009	5.30e-010	0.
Total Components	100.00	1.70e+001	1000000.

CONDENSER RECOVERED OIL STREAM

Temperature: 120.00 deg. F
Flow Rate: 2.58e-003 gpm

Component	Conc. (wt%)	Loading (lb/hr)
Water	6.32e-002	6.93e-004
Carbon Dioxide	2.90e-002	3.18e-004
Hydrogen Sulfide	3.60e-002	3.95e-004
Nitrogen	3.82e-005	4.19e-007
Methane	7.23e-003	7.93e-005
Ethane	4.60e-002	5.04e-004
Propane	4.16e-001	4.56e-003
Isobutane	3.02e-001	3.31e-003
n-Butane	8.60e-001	9.43e-003
Isopentane	7.29e-001	7.99e-003
n-Pentane	8.78e-001	9.63e-003
n-Hexane	8.79e-001	9.64e-003
Cyclohexane	1.92e+000	2.11e-002
Other Hexanes	1.18e+000	1.30e-002
Heptanes	1.50e+000	1.64e-002

Benzene	1.82e+001	2.00e-001
Toluene	4.88e+001	5.35e-001
Ethylbenzene	1.49e+000	1.63e-002
Xylenes	2.23e+001	2.45e-001
C8+ Heavies	3.34e-001	3.67e-003
Total Components	100.00	1.10e+000

CONDENSER VENT STREAM

Temperature: 120.00 deg. F
Pressure: 14.00 psia
Flow Rate: 1.39e+000 scfh

Component	Conc. (vol%)	Loading (lb/hr)
Water	1.22e+001	8.04e-003
Carbon Dioxide	7.46e+000	1.20e-002
Hydrogen Sulfide	2.73e+000	3.42e-003
Nitrogen	1.80e-002	1.85e-005
Methane	2.05e+001	1.21e-002
Ethane	1.12e+001	1.23e-002
Propane	1.35e+001	2.19e-002
Isobutane	3.68e+000	7.85e-003
n-Butane	7.37e+000	1.57e-002
Isopentane	1.95e+000	5.15e-003
n-Pentane	1.80e+000	4.77e-003
n-Hexane	6.57e-001	2.08e-003
Cyclohexane	1.01e+000	3.13e-003
Other Hexanes	1.30e+000	4.11e-003
Heptanes	3.32e-001	1.22e-003
Benzene	7.53e+000	2.16e-002
Toluene	6.08e+000	2.06e-002
Ethylbenzene	5.18e-002	2.02e-004
Xylenes	6.16e-001	2.40e-003
C8+ Heavies	1.03e-004	6.40e-007
Total Components	100.00	1.59e-001

COMBUSTION DEVICE OFF GAS STREAM

Temperature: 1000.00 deg. F
Pressure: 14.70 psia
Flow Rate: 2.24e-002 scfh

Component	Conc. (vol%)	Loading (lb/hr)
Hydrogen Sulfide	3.40e+000	6.83e-005
Methane	2.55e+001	2.41e-004
Ethane	1.39e+001	2.47e-004
Propane	1.68e+001	4.38e-004
Isobutane	4.59e+000	1.57e-004
n-Butane	9.17e+000	3.14e-004
Isopentane	2.42e+000	1.03e-004
n-Pentane	2.25e+000	9.55e-005
n-Hexane	8.18e-001	4.15e-005
Cyclohexane	1.26e+000	6.25e-005
Other Hexanes	1.62e+000	8.22e-005
Heptanes	4.13e-001	2.44e-005
Benzene	9.37e+000	4.31e-004
Toluene	7.57e+000	4.11e-004
Ethylbenzene	6.45e-002	4.03e-006
Xylenes	7.67e-001	4.80e-005
C8+ Heavies	1.28e-004	1.28e-008
Total Components	100.00	2.77e-003
Ethylbenzene	6.38e-002	1.88e-005
Xylenes	7.09e-001	2.09e-004
C8+ Heavies	3.28e-004	1.55e-007
Total Components	100.00	1.31e-002

SUMMARY OF TANKS SENT TO FLARE POTENTIAL TO EMIT

DEWITT CENTRAL FACILITY 3 January 1st 2012 through January 1st 2013

BURLINGTON RESOURCES OIL & GAS COMPANY LP

			VOC Emissions								Benzene Emissions								H_2S Emissions[c]			
			Flash Emissions[a]		WB Emissions[b]		Uncontrolled Total		Controlled Total[d]		Flash Emissions[a]		WB Emissions[b]		Uncontrolled Total		Controlled Total[d]		Uncontrolled Total		Controlled Total[d]	
EPN	**FIN**	**Description**	**Hourly (lb/hr)**	**Annual (T/yr)**	**Hourly (lb/hr)**	**Annual (T/yr)**	**Hourly (lb/hr)**	**Annual (T/yr)**	**Hourly (lb/hr)**	**Annual (T/yr)**	**Hourly (lb/hr)**	**Annual (T/yr)**	**Hourly (lb/hr)**	**Annual (T/yr)**	**Hourly (lb/hr)**	**Annual (T/yr)**	**Hourly (lb/hr)**	**Annual (T/yr)**	**Hourly (lb/hr)**	**Annual (T/yr)**	**Hourly (lb/hr)**	**Annual (T/yr)**
FL-1	TK-01 TK-02	500 bbl Condensate Storage Tanks	7.73	33.86	11.02	4.39	18.75	38.25	0.38	0.77	0.03	0.13	0.11	0.04	0.14	0.17	0.003	0.003	0.001	0.004	0.00002	0.0001
FL-1	TK-03	500 bbl Slop Storage Tank	--	--	11.02	1.85	11.02	1.85	0.22	0.04	--	--	0.11	0.02	0.11	0.02	0.002	0.0004	--	--	--	--
FL-1	TK-04	500 bbl Produced Water Storage Tank	2.73	11.96	0.11	0.03	2.84	11.99	0.06	0.24	0.01	0.04	0.001	0.0002	0.01	0.04	0.0002	0.001	0.0005	0.002	0.00001	0.00004
TK-AF[e]	TK-AF[e]	Antifreeze Liquid Storage	--	--	0.50	0.01	0.50	0.01	--	--	--	--	--	--	--	--	--	--	--	--	--	--
TK-LO[f]	TK-LO[f]	Lube Oil Liquid Storage	--	--	0.0002	0.000002	0.0002	0.000002	--	--	--	--	--	--	--	--	--	--	--	--	--	--
TK-SCAV[f]	TK-SCAV[f]	H_2S Scavenger Liquid Storage	--	--	--	--	<0.01	<0.01	--	--	--	--	--	--	--	--	--	--	--	--	--	--

Notes:

[a] VOC and Benzene Flash Emissions are calculated using the WinSim stream simulation program. Data inputs included the pressurized stream data and throughputs represented in this submittal. See the pages at the end of this attachment for a printout of the data inputs and emissions reports.

[b] The Working/Breathing emissions for tanks TK-01 thourgh TK-04 are calculated using AP 42 Chapter 7 calculations with data inputs from the stream data and throughputs. See the following pages for the represented calculations.

[c] The Ideal Gas Law was used to estimate the H2S emission rates using the maximum sulfur concentration in the gas coming off the tanks (150 ppm). An example calculation for hourly H2S emissions from FIN TK-04 follows:

H_2S (lb/hr) = (% Vol H_2S in stream) * (Total Volumetric Flow of Gas, scf/hr) * (1 atm STP) * (34.0798 lb/lb-mol H2S) / (1.314, atm-scf/lb-mol-K) / (298 K)

H_2S (lb/hr) = (150 ppm /10^6) * (35.66 scf/hr) * (1 atm) * (34.0789 lb/lbmol H2S) / (1.314, atm-scf/lb-mol-K) / (298 K)

H_2S (lb/hr) = 0.001 lb/hr

[d] All VOC tank emissions are routed to the flare control device with a capture and control efficiency of 98%. H_2S emissions are captured at 98% and then 98% converted to SO_2 during combustion.

[e] Working and breathing emissions for the Antifreeze and Lube Oil tanks were determined using Tanks 4.09d simulation software. The size and number of TK-AF and TK-LO tanks may vary, but the total throughput of the liquid and the associated VOC emissions will not exceed the proposed emission rate. Printouts from the software can be found on the following pages. An example calculation of the hourly emissions for FIN TK-AF follows:

VOC(lb/hr)= [((Breathing Loss, lb/yr) / (8,760 hr/yr)) + ((Working Loss, lb/yr) / (Number of turnovers/yr) / (Turnovers per hour))] * No. of tanks

VOC(lb/hr)= ((8.909 lb/yr) / (8,760 hr/yr)) + ((5.9832 lb/yr) / (12 turnovers/yr) / (1 turnover per hour))

VOC(lb/hr)= 0.50 lb/hr

An example calculation of the annual emissions for FIN TK-AF follows:

VOC(T/yr)= ((Working Loss, lb/yr) + (Breathing Loss, lb/yr)) / (2,000 ton/yr)) * No. of Tanks

VOC(T/yr)= ((5.9832 lb/yr) + (8.909 lb/yr)) / (2,000 ton/yr)

VOC(T/yr)= 0.01 lb/hr

[f] The size and number of the H_2S Scavenger Liquid Storage Tanks may vary, but the total throughput of the liquid and the associated VOC emissions will not exceed the proposed negligible emission rate.

CALCULATION OF STORAGE TANK WORKING AND BREATHING POTENTIAL TO EMIT

DEWITT CENTRAL FACILITY 3 January 1st 2012 through January 1st 2013

BURLINGTON RESOURCES OIL & GAS COMPANY LP

Variable	Description	Units	Value
L_T	total loss = Ls + Lw	Ton/yr	See Table
L_S	standing loss = 365 Vv Wv Ke Ks	lb/yr	See Table
L_W	working loss = 0.001 Mv Pv Q Kn Kp	lb/yr	See Table
L_H	working loss = 0.001 Mv Pmax Qh	lb/hr	See Table
	Roof Construction		Cone
RVP	Condensate Reid Vapor Pressure	psia	13.77
ΔPb	Breather vent pressure range	psi	0.06
I	Solar insolation factor	Btu/ft2-day	1521
P_A	Atmospheric Pressure	psia	14.7
Mv	Vapor Molecular Weight	lb/lb-mol	40
T	Annual Average Temperature	°F	72.1
T_{AX}	Daily Maximum Ambient Temperature	°R	541.6
T_{AN}	Daily Minimum Ambient Temperature	°R	522.5
ΔT_A	Daily average ambient temperature range	°R	19.1
Kp	Product factor		1

		Tank Specifications							Material Specifications																VOC		Benzene	
		V/H	D	H/L	Capacity	Color		α	Mv	P_{MAX}	Q^{Δ}		ΔTv	Hvo	Vv	T_{LA}	P_{VA}	Wv	ΔPv	Ke	Ks	Kn	L_S	L_W	L_T	L_H	L_T	L_H
Material	No. of Tanks	Tank Type	Tank Diameter (ft)	Tank Height/ Length (ft)	Tank Capacity (bbl)	Paint Color	Paint Conditions	Paint Solar Absorbance Factor	Vapor Molecular Weight	Reid Vapor Pressure (psia)	Max. Hourly Thruput (bbl/hr)	Annual thruput (bbl)	Daily Vapor Temp. Range °F	Vapor Space Outage (ft)	Vapor Space Volume (ft3)	Daily Average Liquid Surface Temp °R	Average Vapor Pressure (psia)	Vapor Density (lb/ft3)	Daily Vapor Pressure Range	Vapor Space Expan. Factor	Vented Vapor Sat. Factor	Turnover Factor	Standing Loss per tank (lb/yr)	Working Loss per tank (lb/yr)	Total Loss (lb/hr)	Total Loss (T/yr)	Total Loss (lb/hr)	Total Loss (T/yr)
Condensate	2	V	12	25	500	Gray	Good	0.54	40	13.77	20	14,200	36.75	12.63	1428.4	539.8	15.456	0.10673	3.96891	-5.1024	0.09	1.00	0.00	8,779.01	**11.02**	**4.39**	**0.11**	**0.04**
Slop	1	V	12	25	500	Gray	Good	0.54	40	13.77	20	6,000	36.75	12.63	1428.4	539.8	15.456	0.10673	3.96891	-5.1024	0.09	1.00	0.00	3,709.44	**11.02**	**1.85**	**0.11**	**0.02**
PW	1	V	12	25	500	Gray	Good	0.54	40	0.138	20	73,000	36.75	12.63	1428.4	539.8	0.042	0.00029	0.02561	0.0662	0.97	0.37	9.71	45.38	**0.11**	**0.03**	**0.001**	**0.0002**

NOTE: Tank working and breathing emissions are based on the equations found in EPA AP 42 Chapter 7. All factors used are represented in the table on this page. The Condensate Reid Vapor Pressure and Vapor Molecular Weight are determined based on the WinSim condensate stream and Off Gas stream. All other variables are found in AP 42 Chapter 7 or are default unit values.

CALCULATION OF TRUCK LOADING POTENTIAL TO EMIT

DEWITT CENTRAL FACILITY 3 January 1st 2012 through January 1st 2013

BURLINGTON RESOURCES OIL & GAS COMPANY LP

Sample Calculations for condensate and slop:

Loading Loss (lb/Mgal) = 12.46 * S * P * M / T (AP-42 Section 5.2)
Maximum Loading Loss = 12.46 * 0.60 * 13.770 * 40 / 560 = 7.353 lb/Mgal

Hourly Uncollected Emissions PTE = (Hourly Throughput, Mgal/hr) * (Maximum Loading Loss, lb/Mgal) * (1 - Capture Efficiency)
Hourly Uncollected Emissions PTE = (8.19 Mgal/hr) * (7.353 lb/Mgal) * (1 - 0.987) = 0.78 lb/hr

Hourly PTE = ((Hourly Throughput, Mgal/hr) * (Maximum Loading Loss, lb/Mgal) * (Capture Efficiency) * (1 - Control Efficiency)) + (Hourly Uncollected Loading Emissions, (lb/hr))
Hourly PTE = (8.19 Mgal/hr) * (7.353 lb/Mgal) * (0.987) * (1 - 0.98) + (0.78 lb/hr) = 1.97 lb/hr

Annual Emissions = ((Annual Throughput, Mgal/yr) * (Average Loading Loss, lb/Mgal) * (Capture Efficiency) * (1 - Control Efficiency)) + (Annual Uncollected Loading Emissions, lb/yr)) / (2000 lb/T)
Annual Emissions = (848.40 Mgal/yr) * (7.367 lb/Mgal) * (0.987) * (1 - 0.98) + (81.25 lb/yr) / (2000 lb/T) = 0.10 T/yr

															VOC		Benzene	
FIN	EPN	Facility Name	S	P @ 560 °R (psia)	P @531.7 °R (psia)	M	Maximum Loading Loss (lb/Mgal)	Average Loading Loss (lb/Mgal)	Hourly Throughput (Mgal/hr)	Annual Throughput (Mgals/yr)	Capture Efficiency	Hourly Uncollected Loading Emissions (lb/hr)	Annual Uncollected Loading Emissions (lb/yr))	Control Efficiency	Hourly PTE (lb/hr)	Annual PTE (T/yr)	Hourly PTE (lb/hr)	Annual PTE (T/yr)
TRUCK1	FL-1	Condensate and Slop Tank Truck Loading	0.60	13.77	13.099	40	7.353	7.367	8.19	848.40	0.987	0.78	81.25	0.98	1.97	0.10	0.02	0.001
TRUCK2	FL-1	Produced Water Tank Truck Loading	0.60	0.14	0.029	40	0.075	0.079	8.19	3,066.00	0.987	0.01	3.15	0.98	0.02	0.004	0.0001	0.00002

Daily maximum and daily minimum ambient temperature from Tanks 4.09d for this area's annual averages (79.5and 57.725, for average of 68.62).

Annual Average Condensate Vapor Pressure at T_{LA} :

P = exp{ [(2799/(T+459.6) - 2.227]log10(RVP) - 7261/(T+459.6) + 12.82}
exp{ [(2799/(68.62+459.6) - 2.227]log10(13.77) - 7261/(68.62+459.6) + 12.82}
13.099 psia

Annual Average Produced Water Vapor Pressure at T_{LA} :

P = exp{ [(2799/(T+459.6) - 2.227]log10(RVP) - 7261/(T+459.6) + 12.82}
exp{ [(2799/(68.62+459.6) - 2.227]log10(13.77*.01) - 7261/(68.62+459.6) + 12.82}
0.029 psia

NOTE: Capture Efficiency of 98.7% represented based upon TCEQ Guidance regarding trucks that are utlizing NSPS XX Testing.

SUMMARY OF PROCESS FLARE FUEL GAS COMBUSTION AND
WASTE GAS COMBUSTION POTENTIAL TO EMIT- NORMAL OPERATIONS

DEWITT CENTRAL FACILITY 3 January 1st 2012 through January 1st 2013

BURLINGTON RESOURCES OIL & GAS COMPANY LP

EPN	FIN	Description	CO		NO_X		SO_2		H_2S		VOC		Benzene	
			(lb/hr)	(T/yr)	(lb/hr)	(T/yr)	(lb/hr)	(T/yr)	(lb/hr)	(T/yr)	(lb/hr)	(T/yr)	(lb/hr)	(T/yr)
FL-1	FL-1	Pilot Gas Combustion	0.01	0.04	0.003	0.01	0.0004	0.002	0.0000001	0.0000004	0.0001	0.0004	0.00000003	0.0000001
FL-1	FL-1	Flare Assist Gas Combustion	0.44	1.93	0.22	0.96	0.03	0.13	0.00001	0.00004	0.01	0.04	0.000003	0.00001
FL-1	FL-1	Waste Gas Combustion	1.49	3.70	0.74	1.85	0.00	0.02	0.0001	0.0002	--	--	--	--
		Totals:	**1.94**	**5.67**	**0.96**	**2.82**	**0.03**	**0.15**	**0.0001**	**0.0002**	**0.01**	**0.04**	**0.000003**	**0.00001**

NOTE: Pilot Gas Combustion and Flare Assist Gas Combustion calculations are shown on the following page. Waste Gas Combustion shown here is the combined sum of the waste gas from the Dehy waste stream, Condensate and Produced Water tanks, and loading operations shown on subsequent pages.

CALCULATION OF FLARE PILOT GAS and FLARE ASSIST GAS POTENTIAL TO EMIT

DEWITT CENTRAL FACILITY 3 January 1st 2012 through January 1st 2013

BURLINGTON RESOURCES OIL & GAS COMPANY LP

EPN	FIN	Description	LHV (Btu/scf)	Heat Release scf/hr	Operating Hours (hr/yr)	Pollutant	Emission Factors	Units	Emission Rates Hourly [a] (lb/hr)	Emission Rates Annual [b] (T/yr)
FL-1	FL-1	Flare 1- Process Pilot Gas Combustion	1,292	15	8,760	CO	0.2755	lb/MMBtu	0.01	0.04
						NO_X	0.138	lb/MMBtu	0.003	0.01
						$PM/PM_{10}/PM_{2.5}$	-- [c]	--	--	--
						SO_2	150	ppm H_2S	0.0004	0.002
						H_2S	150	ppm H_2S	0.0000001	0.0000004
						VOC	5.5	lb/MMscf	0.0001	0.0004
						Benzene	0.0021	lb/MMscf	0.00000003	0.0000001
FL-1	FL-1	Flare 1- Process Flare Assist Gas Combustion	1,292	1,250	8,760	CO	0.2755	lb/MMBtu	0.44	1.93
						NO_X	0.138	lb/MMBtu	0.22	0.96
						$PM/PM_{10}/PM_{2.5}$	-- [c]	--	--	--
						SO_2	150	ppm H_2S	0.03	0.13
						H_2S	150	ppm H_2S	0.00001	0.00004
						VOC	5.5	lb/MMscf	0.01	0.04
						Benzene	0.0021	lb/MMscf	0.000003	0.00001

[a] Emission Factors for CO and NO_X are based upon the Draft TNRCC Guidance Document for Flares and Vapor Oxidizers (dated 10/00) for other high-Btu flares. An example calculation for hourly CO emissions for EPN FL-1 follows:

CO (lb/hr) = (Heat Release, scf/hr) * (Lower Heating Value, Btu/scf) * ($MM/10^6$)*(Emission Factor, lb/MMBtu)

CO (lb/hr) = (15 scf/hr) * (1,292 Btu/scf) * (MM/10^6)*(0.2755 lb/MMBtu)

= 0.01 lb/hr CO

The Emission Factors for VOC and Benzene were based upon AP-42 Table 1.4-2 and 1.4-3 (dated 7/98). An example calculation for hourly VOC emissions for EPN FL-1 follows:

VOC (lb/hr) = (Heat Release, scf/hr) * ($MM/10^6$) * (Emission Factor, lb/MMscf)

VOC (lb/hr) = (15 scf/hr) * (MM/10^6) * (5.5 lb/MMscf)

= 0.0001 lb/hr VOC

A material balance approach was used to estimate the SO2 and H2S emission rates using the maximum sulfur concentration in the natural gas. As shown in Figure 6-1, H2S concentration at the site is conservatively represented at 150 ppm. When used as a pilot gas or flare assist gas, 98% of this concentration will be converted to SO2, and 2% will remain uncombusted and unconverted. An example calculation for hourly SO2 emissions for the pilot gas of EPN FL-01 follows:

SO_2 (lb/hr) = Heat Release (scf/hr)*(Sulfur Content, ppmv)*(98% conversion to SO_2)*(1 lb-mol/379 scf)*(34.065 lb H2S/lb-mol)*(64.06 lb SO_2/34.065 lb H2S)

SO_2 (lb/hr) = (15 scf/hr)*((150 ppm H2S)/(10^6 scf gas))*(98% converted to SO2)*(1 lb-mol/379 scf)*(34.065 lb H2S/lb-mol)*(64.06 lb SO2/34.065 lb H2S)

= 0.0004 lb/hr SO_2

[b] An example calculation for annual CO emissions for EPN FL-1 follows:

CO (T/yr) = (Hourly Emissions, lb/hr)*(Annual Operating Hours, hr/yr)*(1 T/2,000 lb)

CO (T/yr) = (0.01 lb/hr)*(8,760 hr/yr)*(1 T/2,000 lb)

CO (T/yr) = 0.04 T/yr CO

[c] The process flares are smokeless per 40 CFR §60.18 requirements; therefore, PM emissions are negligible.

PROCESS FLARE WASTE GAS COMBUSTION EMISSIONS

DEWITT CENTRAL FACILITY 3 January 1st 2012 through January 1st 2013

BURLINGTON RESOURCES OIL & GAS COMPANY LP

EPN	FIN	Description	LHV[a] (Btu/scf)	Waste Gas Flow Rate Hourly (MMBtu/hr)	Waste Gas Flow Rate Annual (MMBtu/yr)	Pollutant	Emission Factors	Units	Potential to Emit Hourly[b] (lb/hr)	Potential to Emit Annual[c] (T/yr)
FL-1	FL-1	Process Flare	2,088	2.61	2,516.79	CO	0.2755	lb/MMBtu	0.72	0.35
		Condensate Tanks and Loading				NO_X	0.1380	lb/MMBtu	0.36	0.17
						$PM/PM_{10}/PM_{2.5}$	-- [e]	--	--	--
						SO_2	-- [c]	--	0.002	0.01
						H_2S	--	--	0.00002	0.0001
FL-1	FL-1	Process Flare	2,061	0.10	703.27	CO	0.2755	lb/MMBtu	0.03	0.10
		Produced Water Tank and Loading				NO_X	0.1380	lb/MMBtu	0.01	0.05
						$PM/PM_{10}/PM_{2.5}$	-- [e]	--	--	--
						SO_2	-- [c]	--	0.001	0.004
						H_2S	--	--	0.00001	0.00004
FL-1	FL-1	Process Flare	1,436	2.69	23,564.40	CO	0.2755	lb/MMBtu	0.74	3.25
		Dehy Unit Waste Gas				NO_X	0.1380	lb/MMBtu	0.37	1.63
						$PM/PM_{10}/PM_{2.5}$	-- [e]	--	--	--
						SO_2	-- [c]	--	0.001	0.01
						H_2S	--	--	0.00002	0.0001

[a] Waste gas stream lower heating value was taken from WinSim calculated stream value.

[b] Emission Factors for CO and NO_X are based upon the Draft TNRCC Guidance Document for Flares and Vapor Oxidizers (dated 10/00) for other high-Btu flares. An example calculation for hourly CO emissions for EPN Fl-1 follows:

CO (lb/hr) = (Hourly Waste Gas Flow Rate, MMBtu/hr)*(Emission Factor, lb/MMBtu)

CO (lb/hr) = (2.61 MMBtu/hr)*(0.2755 lb/MMBtu)

= 0.72 lb/hr CO

[c] H_2S emissions are routed from the tanks to the flare and from the seperator to the flare and then converted to SO_2. SO_2 emission rates were determined based on the combustion efficiency of 98% H_2S converted to SO_2. H_2S emitted at the flare is 2% of the stream not converted by combustion. An example calculation for hourly SO_2 emissions for EPN FL-1 follows:

SO_2 (lb/hr) = (Source H_2S Emission Rate, lb/hr) * (98% captured H2S stream) * (98% conversion to SO_2 at combustion) * (1 mol H_2S/34.07 lb H_2S) * (64.06 lb SO2/1 mol SO_2)

SO_2 (lb/hr) = (0.00 lb/hr H2S at Condensate Tanks)* (98%) * (98%) * (1 mol H2S/34.07 lb H2S) * (64.06 lb SO2/1 mol SO2)

= 0.00 lb/hr SO_2

[d] An example calculation for annual CO emissions for EPN FL-1 follows:

CO (T/yr) = (Annual Waste Gas Flow Rate, MMBtu/yr) * (Emission Factor, lb/MMBtu) * (1 T / 2,000 lb)

CO (T/yr) = (2,516.79 MMBtu/yr) * (0.2755 lb/MMBtu) * (1 T / 2,000 lb)

= 0.35 T/yr CO

[e] The process flares are smokeless per 40 CFR §60.18 requirements; therefore, PM emissions are negligible.

CALCULATION OF FLARE FEED RATES FROM FINs TK-01 THROUGH TK-03, and TRUCK1

DEWITT CENTRAL FACILITY 3 January 1st 2012 through January 1st 2013

BURLINGTON RESOURCES OIL & GAS COMPANY LP

TK-01 through TK-03 and TRUCK1 Total Emissions:[a]

VOC Emissions (lb/hr):	89.27
VOC Emissions (TPY):	43.07
Hydrocarbon Emissions (lb/hr):	124.47
Hydrocarbon Emissions (TPY):	60.05

Constituent	Heating Value[b] (Btu/lb)	Condensate Tanks Flash Gas Weight (%)	TK-01 through TK-03 and TRUCK1 Emissions [c] Hourly (lb/hr)	Annual (T/yr)	Flare Feed Rate [d] Hourly (MMBtu/hr)	Annual (MMBtu/yr)
Methane	23,861	11.82%	14.71	7.10	0.34	332.05
Ethane	22,304	14.97%	18.63	8.99	0.41	393.01
Propane	21,646	20.07%	24.98	12.05	0.53	511.24
I-Butane	21,242	7.76%	9.66	4.66	0.20	194.02
N-Butane	21,293	14.66%	18.25	8.80	0.38	367.26
I-Pentane	21,025	8.47%	10.54	5.09	0.22	209.75
N-Pentane	21,072	8.35%	10.39	5.01	0.21	206.92
Cyclopentane	20,350	0.00%	0.00	0.00	0.00	0.00
n-Hexane	20,928	7.23%	9.00	4.34	0.18	178.02
Cyclohexane	20,195	0.51%	0.63	0.31	0.01	12.27
Other Hexanes	20,928	0.00%	0.00	0.00	0.00	0.00
Heptanes	20,825	3.15%	3.92	1.89	0.08	77.14
Octanes	20,747	0.60%	0.75	0.36	0.02	14.64
Nonanes	20,687	0.08%	0.10	0.05	0.002	2.03
Decanes Plus	20,638	0.03%	0.04	0.02	0.001	0.81
Benzene	18,172	0.26%	0.32	0.16	0.01	5.70
Toluene	18,422	0.40%	0.50	0.24	0.01	8.67
Ethylbenzene	18,658	0.03%	0.04	0.02	0.001	0.73
Xylene	18,438	0.12%	0.15	0.07	0.003	2.53
	VOC	71.72%				
				Total:	**2.61**	**2,516.79**

[a] Total VOC Emissions were determined by adding the Uncontrolled Streams for FIN TK-01 through TK-03 on the Tank Summary table with the uncontrolled emissions from the Condensate Truck Loading. Total Hydrocarbon Emissions were calculated as follows:

Total HC (lb/hr) = VOC Emissions (lb/hr) * (1/ VOC% of stream)

Total HC (lb/hr) = (89.27 lb/hr) * (1 / 71.72%)

Total HC (lb/hr) = 124.47 lb/hr

[b] Heating values taken from Perry's Chemical Engineers' Handbook , Table 3-207 (pg. 3-155)

[c] Emission Rates were proportioned from the Total Hydrocarbon Emissions using the Condensate Flash Gas stream constituents weight percents, generated by the WinSim program.

[d] An example calculation for the hourly flare feed rate for Methane is demonstrated.

MMBtu/hr Methane = Methane Heating Value (Btu/lb) * Hourly Methane Emissions (lb/hr) * 98% of stream is combusted / 10^6

MMBtu/hr Methane = (23,861 Btu/lb) * (14.71 lb/hr) * 98% / (10^6)

MMBtu/hr Methane = 0.34 MMBtu/hr

An example calculation for the annual flare feed rate for Methane is demonstrated.

MMBtu/yr Methane = Methane Heating Value (Btu/lb) * Annual Methane Emissions (T/yr) * (2,000 lb/T) * 98% of stream is combusted / 10^6

MMBtu/yr Methane = (23,861 Btu/lb) * (7.10 T/yr) * (2,000 lb/T) * 98% / (10^6)

MMBtu/yr Methane = 332.05 MMBtu/yr

CALCULATION OF FLARE FEED RATES FROM FIN TK-04 and TRUCK2

DEWITT CENTRAL FACILITY 3 January 1st 2012 through January 1st 2013

BURLINGTON RESOURCES OIL & GAS COMPANY LP

TK-04 and TRUCK2 Total Emissions:[a]

VOC Emissions (lb/hr):	3.34
VOC Emissions (TPY):	12.11
Hydrocarbon Emissions (lb/hr):	4.65
Hydrocarbon Emissions (TPY):	16.86

Constituent	Heating Value[b] (Btu/lb)	Produced Water Tanks Flash Gas Weight (%)	TK-04 and TRUCK2 Emissions [c] Hourly (lb/hr)	TK-04 and TRUCK2 Emissions [c] Annual (T/yr)	Flare Feed Rate [d] Hourly (MMBtu/hr)	Flare Feed Rate [d] Annual (MMBtu/yr)
Methane	23,861	11.49%	0.53	1.94	0.01	90.73
Ethane	22,304	14.66%	0.68	2.47	0.01	107.98
Propane	21,646	19.85%	0.92	3.35	0.02	142.13
I-Butane	21,242	7.80%	0.36	1.32	0.01	54.96
N-Butane	21,293	14.75%	0.69	2.49	0.01	103.92
I-Pentane	21,025	8.53%	0.40	1.44	0.01	59.34
N-Pentane	21,072	8.40%	0.39	1.42	0.01	58.65
Cyclopentane	20,350	0.00%	0.00	0.00	0.00	0.00
n-Hexane	20,928	7.29%	0.34	1.23	0.01	50.45
Cyclohexane	20,195	0.51%	0.02	0.09	0.0004	3.56
Other Hexanes	20,928	0.00%	0.00	0.00	0.00	0.00
Heptanes	20,825	3.17%	0.15	0.53	0.003	21.63
Octanes	20,747	0.60%	0.03	0.10	0.001	4.07
Nonanes	20,687	0.08%	0.004	0.01	0.0001	0.41
Decanes Plus	20,638	0.03%	0.001	0.01	0.00002	0.40
Benzene	18,172	0.26%	0.01	0.04	0.0002	1.42
Toluene	18,422	0.40%	0.02	0.07	0.0004	2.53
Ethylbenzene	18,658	0.03%	0.001	0.01	0.00002	0.37
Xylene	18,438	0.12%	0.01	0.02	0.0002	0.72
	VOC	71.82%				
				Total:	**0.10**	**703.27**

[a] Total VOC Emissions were determined by adding the Uncontrolled Streams for FIN TK-04 on the Tank Summary table and the uncontrolled emissions associated with the produced water loading, FIN TRUCK2. Total Hydrocarbon Emissions were calculated as follows:

Total HC (lb/hr) = VOC Emissions (lb/hr) * (1/ VOC% of stream)

Total HC (lb/hr) = (03.34 lb/hr) * (1/ 71.82%)

Total HC (lb/hr) = 4.65 lb/hr

[b] Heating values taken from Perry's Chemical Engineers' Handbook , Table 3-207 (pg. 3-155)

[c] Emission Rates were proportioned from the Total Hydrocarbon Emissions using the Produced Water Flash Gas stream constituents weight percents, generated by the WinSim program.

[d] An example calculation for the hourly flare feed rate for Methane is demonstrated.

MMBtu/hr Methane = Methane Heating Value (Btu/lb) * Hourly Methane Emissions (lb/hr) * 98% of stream is combusted / 10^6

MMBtu/hr Methane = (23,861 Btu/lb) * (0.53 lb/hr) * 98% / (10^6)

MMBtu/hr Methane = 0.01 MMBtu/hr

An example calculation for the annual flare feed rate for Methane is demonstrated.

MMBtu/yr Methane = Methane Heating Value (Btu/lb) * Annual Methane Emissions (T/yr) * (2,000 lb/T) * 98% of stream is combusted / 10^6

MMBtu/yr Methane = (23,861 Btu/lb) * (1.94 T/yr) * (2,000 lb/T) * 98% / (10^6)

MMBtu/yr Methane = 90.73 MMBtu/yr

CALCULATION OF STORAGE TANK WORKING AND BREATHING POTENTIAL TO EMIT DURING FLARE DOWNTIME -SMS

DEWITT CENTRAL FACILITY 3 January 1st 2012 through January 1st 2013

BURLINGTON RESOURCES OIL & GAS COMPANY LP

Variable	Description	Units	Value
L_T	total loss = Ls + Lw	Ton/yr	See Table
L_S	standing loss = 365 Vv Wv Ke Ks	lb/yr	See Table
L_W	working loss = 0.001 Mv Pv Q Kn Kp	lb/yr	See Table
L_H	working loss = 0.001 Mv Pmax Qh	lb/hr	See Table
	Roof Construction		Cone
RVP	Condensate Reid Vapor Pressure	psia	13.77
ΔPb	Breather vent pressure range	psi	0.06
I	Solar insolation factor	Btu/ft2-day	1521
P_A	Atmospheric Pressure	psia	14.7
Mv	Vapor Molecular Weight	lb/lb-mol	40
T	Annual Average Temperature	°F	72.1
T_{AX}	Daily Maximum Ambient Temperature	°R	541.6
T_{AN}	Daily Minimum Ambient Temperature	°R	522.5
ΔT_A	Daily average ambient temperature range	°R	19.1
Kp	Product factor		1

		Tank Specifications							Material Specifications												VOC		Benzene	
		V/H	D	H/L	Capacity	Color		α	Mv	P_{MAX}	Q^2	ΔTv	Hvo	T_{LA}	P_{VA}	Wv	ΔPv	Ke	Ks	L_S	L_T	L_H	L_T	L_H
Material	No. of Tanks	Tank Type	Tank Diameter (ft)	Tank Height/ Length (ft)	Tank Capacity (bbl)	Paint Color	Paint Conditions	Paint Solar Absorbance Factor	Vapor Molecular Weight	Reid Vapor Pressure (psia)	Max. Hourly Storage (bbl/hr)	Daily Vapor Temp. Range °F	Vapor Space Outage (ft)	Daily Average Liquid Surface Temp °R	Average Vapor Pressure (psia)	Vapor Density (lb/ft3)	Daily Vapor Pressure Range	Vapor Space Expan. Factor	Vented Vapor Sat. Factor	Standing Loss per tank (lb/yr)	Total Loss (lb/hr)	Total Loss (T/yr)	Total Loss (lb/hr)	Total Loss (T/yr)
Condensate	2	V	12	25	500	Gray	Good	0.54	40	13.77	500	36.75	12.63	539.8	15.456	0.10673	3.96891	-5.1024	0.09	0.00	**0.00**	**0.00**	**0.00**	**0.00**
Slop	1	V	12	25	500	Gray	Good	0.54	40	13.77	500	36.75	12.63	539.8	15.456	0.10673	3.96891	-5.1024	0.09	0.00	**0.00**	**0.00**	**0.00**	**0.00**
PW	1	V	12	25	500	Gray	Good	0.54	40	0.138	500	36.75	12.63	539.8	0.042	0.00029	0.02561	0.0662	0.97	0.19	**0.001**	**0.0001**	**0.00001**	**0.000001**

NOTE: Tank working and breathing emissions are based on the equations found in EPA AP 42 Chapter 7. All factors used are represented in the table on this page. The Condensate Reid Vapor Pressure and Vapor Molecular Weight are determined based on the WinSim condensate stream and Off Gas stream. All other variables are found in AP 42 Chapter 7 or are default unit values.

The emissions shown are due to flare maintenance occuring 2% of the year. During the flare downtime the wellhead would be shut in. Therefore, there would be no condensate or produced water liquids flowing to the tanks; however, any liquid already in the tanks would remain and have breathing (standing losses) emissions. These emissions would not be controlled, as the flare is down for maintenance. The calculations shown demonstrate this alternative operating scenario regarding flare maintenance and downtime. Based on 2% downtime, this scenario is being shown to occur for 175.2 hours in a year.

As shown on the summary page representing the Tank Emission sent to Flare, H_2S emissions are represented as occuring when the liquid streams flash during the change from a pressurized flow to the atmospheric tank. Due to the chemical properties of H_2S, the most conservative approach is to represent that all H_2S in the liquid will immediately flash, and there will be no H_2S emitted during working and breathing while the liquids are stored. Since there will be no liquid flow during the flare downtime, there are no flash emissions and therefore no H_2S emissions from the standing loss of the tanks.

MSS CALCULATION OF COMPRESSOR ENGINE STARTER VENT POTENTIAL TO EMIT

DEWITT CENTRAL FACILITY 3 January 1st 2012 through January 1st 2013

BURLINGTON RESOURCES OIL & GAS COMPANY LP

Description	Facility Identification Number COMP-01-SV
Number of Engine Starts per Year	52
Number of Engine Starts per Hour	1
Start Volume per Event, scf	900
Fuel Stream Specific Gravity	0.8781
Fuel Stream Density, lb/scf [a]	0.0671
VOC Percentage in Fuel Stream, wt%	40%
Max Benzene Percentage in Gas Stream, wt%	0.26%
Max H_2S Percentage in Fuel Stream, wt%	0.03%
VOC Hourly Emission Rates (lb/hr): [b]	24.16
VOC Annual Emission Rates (T/yr): [c]	0.63
Benzene Hourly Emission Rates (lb/hr): [b]	0.16
Benzene Annual Emission Rates (T/yr): [c]	0.004
H_2S Hourly Emission Rates (lb/hr): [b]	0.02
H_2S Annual Emission Rates (T/yr): [c]	0.0005

[a] Gas stream density is calculated as follows:

(28.96 lb/mole) / (379 scf/mole) * (0.8781) = 0.067 lb/scf

[b] Hourly starter vent VOC, benzene and H2S emissions are calculated based upon a conservative estimate of the portion of each consituent in the volume known to blow down from the engine source. An example calculation for VOC for COMP-01-SV is as follows:

VOC lb/hr = (1 startup/hr) * (900 scf/startup) * (0.067 lb/scf) * (40.00%) = 24.16 lb/hr

[c] Annual starter VOC emission rates are calculated as follows:

VOC lb/hr = (52 startups/yr) * (900 scf/startup) * (0.067 lb/scf) * (40.00%) / (2,000 lb/T) = 0.63 T/yr

SMSS - CALCULATION OF COMPRESSOR ENGINE BLOWDOWN POTENTIAL TO EMIT

DEWITT CENTRAL FACILITY 3 January 1st 2012 through January 1st 2013

BURLINGTON RESOURCES OIL & GAS COMPANY LP

Description	Facility Identification Number COMP-01-BD
Number of Blowdowns per Year	52
Number of Blowdowns per Hour	1
Blowdown Volume per Event, scf	1,061
Gas Stream Specific Gravity	0.8781
Gas Stream Density, lb/scf [a]	0.0671
Max VOC Percentage in Gas Stream, wt%	40%
Max Benzene Percentage in Gas Stream, wt%	0.26%
Max H_2S Percentage in Gas Stream, wt%	0.03%
VOC Hourly Emission Rates (lb/hr): [b]	28.48
VOC Annual Emission Rates (T/yr): [c]	0.74
Benzene Hourly Emission Rates (lb/hr):[b]	0.19
Benzene Annual Emission Rates (T/yr): [c]	0.005
H_2S Hourly Emission Rates (lb/hr): [b]	0.02
H_2S Annual Emission Rates (T/yr): [c]	0.001
Controlled VOC Hourly Emission Rates (lb/hr)[d]	0.57
Controlled VOC Annual Emission Rates (T/yr):[e]	0.01
Controlled Benzene Hourly Emission Rates (lb/hr):[d]	0.004
Controlled Benzene Annual Emission Rates (T/yr): [e]	0.0001
Controlled H_2S Hourly Emission Rates (lb/hr)[d]	0.0004
Controlled H_2S Annual Emission Rates (T/yr):[e]	0.00002

[a] Gas stream density is calculated as follows:

(28.96 lb/mole) / (379 scf/mole) * (0.8781) = 0.067 lb/scf

[b] Hourly blowdown VOC, Benzene and H_2S emissions rates are calculated. An example calculation for VOC for COMP-01-BD is as follows:
VOC lb/hr = (1 blowdown/hr) * (1,061 scf/blowdown) * (0.067 lb/scf) * (40.00% VOC in Stream) * (100-98% controlled at flare) = 28.48 lb/hr

[c] Annual blowdown VOC, Benzene and H_2S emission rates are calculated as follows:

VOC lb/hr = (52 blowdowns/yr) * (1,061 scf/blowdown) * (0.067 lb/scf) * (40.00%) / (2,000 lb/T) * (100% - 98% controlled

[d] Hourly controlled blowdown VOC, Benzene and H_2S emissions are calculated based upon a conservative estimate of the portion of each consituent in the volume known to blowdown from the engine source. An example calculation for VOC for

VOC lb/hr = (1 blowdown/hr) * (1,061 scf/blowdown) * (0.067 lb/scf) * (40.00% VOC in Stream) * (100-98% controlled at

[e] Annual controlled blowdown VOC emission rates are calculated as follows:

VOC lb/hr = (52 blowdowns/yr) * (1,061 scf/blowdown) * (0.067 lb/scf) * (40.00%) / (2,000 lb/T) * (100% - 98% controlled

SMSS - PROCESS FLARE WASTE GAS COMBUSTION EMISSIONS

DEWITT CENTRAL FACILITY 3 January 1st 2012 through January 1st 2013

BURLINGTON RESOURCES OIL & GAS COMPANY LP

EPN	FIN	Description	LHV[a] (Btu/scf)	Waste Gas Flow Rate Hourly (MMBtu/hr)	Waste Gas Flow Rate Annual (MMBtu/yr)	Pollutant	Emission Factors	Units	Potential to Emit Hourly[b] (lb/hr)	Potential to Emit Annual[c] (T/yr)
FL-1-SMSS	COMP-01-BD	Process Flare	1,448	1.52	79.16	CO	0.2755	lb/MMBtu	0.42	0.01
		Compressor Blowdown Event				NO_X	0.1380	lb/MMBtu	0.21	0.01
						$PM/PM_{10}/PM_{2.5}$	-- [e]	--	--	--
						SO_2	-- [c]	--	0.04	0.002
						H_2S	-- [c]	--	0.0004	0.00002

[a] Waste gas stream lower heating value was taken from the inlet gas analysis.

[b] Emission Factors for CO and NO_X are based upon the Draft TNRCC Guidance Document for Flares and Vapor Oxidizers (dated 10/00) for other high-Btu flares. An example calculation for hourly CO emissions for EPN Fl-1-SMSS follows:

CO (lb/hr) = (Hourly Waste Gas Flow Rate, MMBtu/hr)*(Emission Factor, lb/MMBtu)

CO (lb/hr) = (1.52 MMBtu/hr)*(0.2755 lb/MMBtu)

= 0.42 lb/hr CO

[c] H_2S emissions are routed from the separator to the flare and then converted to SO_2. SO_2 emission rates were determined based on the combustion efficiency of 98% H_2S converted to SO_2. H_2S emitted at the flare is 2% of the captured stream not converted by combustion. An example calculation for hourly SO_2 emissions for EPN FL-1-SMSS follows:

SO_2 (lb/hr) = (Source H_2S Emission Rate, lb/hr) * (98% captured H2S stream) * (98% conversion to SO_2 at combustion) * (1 mol H_2S/34.07 lb H_2S) * (64.06 lb SO2/1 mol SO_2)

SO_2 (lb/hr) = (0.02 lb/hr H2S from Blowdown)* (98%) * (98%) * (1 mol H2S/34.07 lb H2S) * (64.06 lb SO2/1 mol SO2)

= 0.04 lb/hr SO_2

[d] An example calculation for annual CO emissions for EPN FL-1-SMSS follows:

CO (T/yr) = (Annual Waste Gas Flow Rate, MMBtu/yr) * (Emission Factor, lb/MMBtu) * (1 T / 2,000 lb)

CO (T/yr) = (79.16 MMBtu/yr) * (0.2755 lb/MMBtu) * (1 T / 2,000 lb)

= 0.01 T/yr CO

[e] The process flares are smokeless per 40 CFR §60.18 requirements; therefore, PM emissions are negligible.

SMSS - CALCULATION OF FLARE FEED RATES FROM BLOWDOWN EVENTS

DEWITT CENTRAL FACILITY 3 January 1st 2012 through January 1st 2013

BURLINGTON RESOURCES OIL & GAS COMPANY LP

Max Engine BD Volume (Mscf/hr)	1.06
Max Engine BD Volume (Mscf/yr)	55
Gas Density (lb/scf)	0.0671

Constituent	Heating Value[a] (Btu/lb)	Inlet Gas Weight (%)	Engine BD Emissions[b] Hourly (lb/hr)	Engine BD Emissions[b] Annual (T/yr)	Flare Feed Rate[c] Hourly (MMBtu/hr)	Flare Feed Rate[c] Annual (MMBtu/yr)
Methane	23,861	43.33%	30.82	0.80	0.72	37.41
Ethane	22,304	16.28%	11.58	0.30	0.25	13.11
Propane	21,646	12.07%	8.58	0.22	0.18	9.33
I-Butane	21,242	3.93%	2.80	0.07	0.06	2.91
N-Butane	21,293	6.68%	4.75	0.12	0.10	5.01
I-Pentane	21,025	3.71%	2.64	0.07	0.05	2.88
N-Pentane	21,072	3.28%	2.33	0.06	0.05	2.48
Cyclopentane	20,350	0.00%	0.00	0.00	0.00	0.00
n-Hexane	20,928	1.67%	1.19	0.03	0.02	1.23
Cyclohexane	20,195	0.60%	0.43	0.01	0.01	0.40
Other Hexanes	20,928	3.39%	2.41	0.06	0.05	2.46
Heptanes	20,825	1.38%	0.98	0.03	0.02	1.22
Octanes	20,747	0.22%	0.16	0.004	0.003	0.16
Nonanes	20,687	0.08%	0.06	0.001	0.001	0.04
Decanes Plus	20,638	0.00%	0.00	0.00	0.00	0.00
Benzene	18,172	0.18%	0.13	0.003	0.002	0.11
Toluene	18,422	0.34%	0.24	0.01	0.004	0.36
Ethylbenzene	18,658	0.01%	0.01	0.0002	0.0002	0.01
Xylene	18,438	0.08%	0.06	0.001	0.001	0.04
				Totals:	**1.52**	**79.16**

[a] Heating values taken from Perry's Chemical Engineers' Handbook , Table 3-207 (pg. 3-155)

[b] Constituent Emission Rates were calculated from the known maximum blowdown volumes and density then proportioned using the Inlet Gas stream constituents weight percents. An example calculation for Methane emissions is as follows:

Methane (lb/hr) = Maximum BD Volume (Mscf/hr) * Gas Density (lb/scf) * Inlet Gas Weight % * 1000
Methane (lb/hr) = (1.06 Mscf/hr) * (0.0671 lb/scf) * 43.33% * 1,000
Methane (lb/hr) = 30.82 lb/hr

[c] An example calculation for the hourly flare feed rate for Methane is demonstrated.

MMBtu/hr Methane = Methane Heating Value (Btu/lb) * Hourly Methane Emissions (lb/hr) * 98% of stream is combusted / 10^6
MMBtu/hr Methane = (23,861 Btu/lb) * (0,030.82 lb/hr) * 98% / (10^6)
MMBtu/hr Methane = 0.72 MMBtu/hr

An example calculation for the annual flare feed rate for Methane is demonstrated.

MMBtu/yr Methane = Methane Heating Value (Btu/lb) * Annual Methane Emissions (T/yr) * (2,000 lb/T) * 98% of stream is combusted / 10^6
MMBtu/yr Methane = (23,861 Btu/lb) * (0.80 T/yr) * (2,000 lb/T) * 98% / (10^6)
MMBtu/yr Methane = 37.41 MMBtu/yr

TABLE 3-1
SUMMARY OF ACTUAL AIR EMISSION RATES

DEWITT CENTRAL FACILITY 3 January 1st 2013 throught January 1st 2014

BURLINGTON RESOURCES OIL & GAS COMPANY LP

			Proposed Allowable Hourly and Annual Emission Rates															
			VOC		NO_X		CO		$PM/PM_{10}/PM_{2.5}$		SO_2		H_2S		CH_2O		Benzene	
EPN	FIN	Description	(lb/hr)	(T/yr)	(lb/hr)	(T/yr)	(lb/hr)	(T/yr)	(lb/hr)	(T/yr)	(lb/hr)	(T/yr)	(lb/hr)	(T/yr)	(lb/hr)	(T/yr)	(lb/hr)	(T/yr)
Normal Operations																		
COMP-01	COMP-01	Compressor Engine 1	0.41	1.65	5.91	23.72	0.38	1.52	0.10	0.40	0.01	0.04	--	--	0.52	2.09	0.003	0.01
FUG	FUG	Site Fugitives	0.78	3.40	--	--	--	--	--	--	--	--	0.001	0.004	--	--	0.01	0.04
REB-1	REB-1	Glycol Reboiler No. 1	0.003	0.01	0.05	0.22	0.04	0.18	0.004	0.02	0.001	0.004	--	--	0.00004	0.0002	0.000001	0.000004
REB-1	DEHY-SV	Glycol Dehy Still Vent	0.10	0.42	--	--	--	--	--	--	--	--	0.001	0.003	--	--	0.004	0.02
FL-1	TK-01 TK-02	Controlled Condensate Tank Emissions	0.28	0.31	--	--	--	--	--	--	--	--	0.00004	0.0002	--	--	0.002	0.001
FL-1	TK-03	Controlled Slop Tank Emissions	0.22	0.04	--	--	--	--	--	--	--	--	--	--	--	--	0.002	0.0004
FL-1	TK-04	Controlled PW Tank Emissions	0.06	0.24	--	--	--	--	--	--	--	--	0.00004	0.0002	--	--	0.0002	0.001
FL-1	TRUCK1	Controlled Condensate Truck Loading	1.97	0.06	--	--	--	--	--	--	--	--	--	--	--	--	0.02	0.001
FL-1	TRUCK2	Controlled Produced Water Truck Loading	0.02	0.004	--	--	--	--	--	--	--	--	--	--	--	--	0.0001	0.00002
FL-1	FL-1	Flare Combustion (normal operations waste gas, assist, and pilot)	0.01	0.04	0.94	2.73	1.91	5.48	--	--	0.11	0.49	0.0001	0.001	--	--	0.000003	0.00001
TK-AF	TK-AF	Antifreeze Liquid Storage	0.50	0.01	--	--	--	--	--	--	--	--	--	--	--	--	--	--
TK-LO	TK-LO	Lube Oil Liquid Storage	0.0002	0.000002	--	--	--	--	--	--	--	--	--	--	--	--	--	--
TK-SCAV	TK-SCAV	H_2S Scavenger Liquid Storage	<0.01	<0.01	--	--	--	--	--	--	--	--	--	--	--	--	--	--
Scheduled Maintenance, Startup and Shutdown Events																		
COMP-01-SV	COMP-01-SV	Compressor Engine 1 Starter Vent	24.16	0.39	--	--	--	--	--	--	--	--	0.06	0.001	--	--	0.16	0.003
FL-1-SMSS	COMP-01-BD	Compressor Engine 1 Blowdown	0.57	0.01	--	--	--	--	--	--	--	--	0.001	0.00002	--	--	0.004	0.0001
FL-1-SMSS	FL-1-SMSS	Flare Combustion (Blowdowns waste gas)	--	--	0.21	0.003	0.42	0.01	--	--	0.13	0.002	0.001	0.00002	--	--	--	--
TK-01 TK-02	TK-01 TK-02	Uncontrolled Condensate Tank Standing Loss Emissions (during flare downtime)	0.00	0.00	--	--	--	--	--	--	--	--	--	--	--	--	0.00	0.00
TK-03	TK-03	Uncontrolled Slop Tank Standing Loss Emissions (during flare downtime)	0.00	0.00	--	--	--	--	--	--	--	--	--	--	--	--	0.00	0.00
TK-04	TK-04	Uncontrolled PW Tank Standing Loss Emissions (during flare downtime)	0.001	0.0001	--	--	--	--	--	--	--	--	--	--	--	--	0.00001	0.000001
		Site-Wide Emissions:	**29.08**	**6.58**	**7.11**	**26.67**	**2.75**	**7.19**	**0.10**	**0.42**	**0.25**	**0.54**	**0.06**	**0.01**	**0.52**	**2.09**	**0.21**	**0.08**

CALCULATION OF COMPRESSOR ENGINE POTENTIAL TO EMIT

DEWITT CENTRAL FACILITY 3 January 1st 2013 throught January 1st 2014

BURLINGTON RESOURCES OIL & GAS COMPANY LP

EPN	FIN	Description	Engine Ratings: Type	Engine Ratings: Rated Horsepower (hp)	Engine Ratings: Fuel Consumption (Btu/hp-hr)	Annual Operating Hours (hr/yr)	Pollutant	Emission Factors [a]	Units	Potential to Emit (PTE): Hourly [a] (lb/hr)	Potential to Emit (PTE): Annual [b] (T/yr)
COMP-01	COMP-01	Compressor Engine 1	Caterpillar G3516TALE	1,340	7,405	8,026	CO	0.13	g/hp-hr	0.38	1.52
			Lean Burn				NO_X	2.00	g/hp-hr	5.91	23.72
			Catalyst				$PM/PM_{10}/PM_{2.5}$	0.0099871	lb/MMBtu	0.10	0.40
			AFR Controller				SO_2	10	ppm S	0.01	0.04
							VOC	0.14	g/hp-hr	0.41	1.65
							CH_2O	0.0528	lb/MMBtu	0.52	2.09
							Benzene[c]	0.001	g/hp-hr	0.003	0.01

[a] The Emission Factors for engines COMP-01 for CO, NO_X and VOC are based on vendor data and conservatively represented. The VOC emission factor includes the CH_2O emission factor from AP-42 because the vendor provided information does not include formaldehyde. An example calculation for hourly CO emissions for EPN COMP-01 follows:

CO (lb/hr) = (Rated Horsepower, hp)*(Emission Factor, g/hp-hr)*(1 lb/453.59 g)

CO (lb/hr) = (1340 hp)*(0.13 g/hp-hr)*(1 lb/453.59 g)

= 0.38 lb/hr CO

The PM/PM_{10} and CH_20 Emission Factors for EPN COMP-01 and COMP-02 are from AP-42 Chapter 3. An example calculation for hourly PM emissions for EPN COMP-01 follows:

PM (lb/hr) = (Fuel Consumption, Btu/hp-hr)*(Rated Horsepower, hp)*(1 MMBtu/10^6 Btu)*(Emission Factor, lb/MMBtu)

PM (lb/hr) = (7,405 Btu/hp-hr)*(1,340 hp)*(1 MMBtu/10^6 Btu)*(0.009987 lb/MMBtu)

= 0.10 lb/hr PM

A material balance approach was used to estimate the SO_2 emission rates using the maximum sulfur concentration in the natural gas. H_2S Scavenger liquids are used to bring the fuel gas H_2S concentration below 10 ppm S. An example calculation for hourly SO_2 emissions for EPN COMP-01 follows:

SO_2 (lb/hr) = (Fuel Consumption, Btu/hp-hr)*(Rated Horsepower, hp)/(Lower Fuel Heating Value, Btu/scf)*(Sulfur Content, ppmv)*(1 lb-mol/379 scf)*(32.06 lb S/lb-mol)*(64.06 lb SO_2/32.06 lb S)

SO_2 (lb/hr) = (7,418 Btu/hp-hr)*(276 hp)/(1,235 Btu/scf)*(10 scf S/10^6 scf gas)*(1 lb-mol/379 scf)*(32.06 lb S/lb-mol)*(64.06 lb SO2/32.06 lb S)

= 0.01 lb/hr SO_2

[b] An example calculation for annual CO emissions for EPN COMP-01 follows:

CO (T/yr) = (Hourly PTE, lb/hr)*(Annual Operating Hours, hr/yr)*(1 T/2,000 lb)

CO (T/yr) = (0.38 lb/hr)*(8,026 hr/yr)*(1 T/2,000 lb)

= 1.52 T/yr CO

[c] An example calculation for benzene emission factor (EF) for EPN COMP-01 follows:

Benzene EF (g/hp-hr) = (VOC emission factor, g/hp-hr)*(Benzene AP-42 Emission Factor, lb/MMBtu) / (VOC AP-42 Emission Factor, lb/MMBtu)

Benzene EF (g/hp-hr) = (0.14) * (0.00044 lb/MMBtu) / (0.118 lb/MMBtu)

= 0.001 g/hp-hr

CALCULATION OF SITE FUGITIVES (FIN FUG) POTENTIAL TO EMIT

DEWITT CENTRAL FACILITY 3 January 1st 2013 throught January 1st 2014

BURLINGTON RESOURCES OIL & GAS COMPANY LP

Component	Number of Components	Emission Factors [a] (lb/hr-component)	Annual Operating Hours (hr/yr)	Maximum VOC[a] (wt%)	Maximum Benzene[a] (wt%)	Maximum H_2S (wt%)	Reduction Credit [a] (%)	PTE VOC Hourly [b] (lb/hr)	PTE VOC Annual [c] (T/yr)	PTE Benzene Hourly [b] (lb/hr)	PTE Benzene Annual [c] (T/yr)	PTE H_2S Hourly [b] (lb/hr)	PTE H_2S Annual [c] (T/yr)
Valves													
Gas Streams	75	0.00992	8,760	40%	0.65%	0.10%	0%	0.30	1.30	0.005	0.02	0.001	0.003
Light Oil	54	0.0055	8,760	100%	0.98%	--	0%	0.30	1.30	0.003	0.01	--	--
Water/Light Oil	55	0.000216	8,760	--	0.50%	--	0%	0.01	0.05	0.0001	0.0003	--	--
Pumps seals													
Water/Light Oil	3	0.000052	8,760	--	0.50%	--	0%	0.0002	0.001	0.000001	0.000003	--	--
Compressors seals													
Gas Streams	4	0.0194	8,760	40%	0.65%	0.10%	0%	0.03	0.14	0.001	0.002	0.0001	0.0003
Flanges													
Gas Streams	88	0.00086	8,760	40%	0.65%	0.10%	0%	0.03	0.13	0.0005	0.002	0.0001	0.0003
Light Oil	29	0.000243	8,760	100%	0.98%	--	0%	0.01	0.03	0.0001	0.0003	--	--
Water/Light Oil	10	0.000006	8,760	--	0.50%	--	0%	0.0001	0.0003	0.0000003	0.000001	--	--
Connectors													
Gas Streams	123	0.00044	8,760	40%	0.65%	0.10%	0%	0.02	0.09	0.0004	0.002	0.0001	0.0002
Light Oil	113	0.000463	8,760	100%	0.98%	--	0%	0.05	0.23	0.001	0.002	--	--
Water/Light Oil	124	0.000243	8,760	--	0.50%	--	0%	0.03	0.13	0.0002	0.001	--	--
							TOTAL:	**0.78**	**3.40**	**0.01**	**0.04**	**0.001**	**0.004**

[a] Fugitive Emission Factors and Reduction Credits are per TCEQ Technical Guidance Document for Equipment Leak Fugitives, dated October 2000. The emission factors are for total hydrocarbon, except for the emission factors associated with Water/Light Oil. As indicated on page 6 of 55 in the mentioned Guidance document, these factors are based off of a known stream constituency of 50%-99% water, and remainder VOC. Therefore, applying a VOC wt % would be double counting for the reduction due to water.

[b] Hourly VOC emission rates are calculated as follows:

(75 components) * (0.00992 lb/hr-component) * (40% VOC) * (100% - 0% reduction credit) = 0.30 lb/hr

[c] Annual VOC emission rates are calculated as follows:

(75 components) * (0.00992 lb/hr-component) * (8,760 hr/yr) * (40% VOC) * (100% - 0% reduction credit) / (2,000 lb/T) = 1.30 T/yr

CALCULATION OF HEATERS POTENTIAL TO EMIT

DEWITT CENTRAL FACILITY 3 January 1st 2013 throught January 1st 2014

BURLINGTON RESOURCES OIL & GAS COMPANY LP

EPN	FIN	Description	Rated Duty (MMBtu/hr)	Operating Annual (hr/yr)	Pollutant	Emission Factor [a]	Unit	Potential To Emit[b] Hourly (lb/hr)	Potential To Emit[b] Annual (T/yr)
REB-1	REB-1	Glycol Reboiler No. 1	0.50	8,760	CO	84	lb/MMscf	0.04	0.18
					NO_X	100	lb/MMscf	0.05	0.22
					$PM/PM_{10}/PM_{2.5}$ [d]	7.6	lb/MMscf	0.004	0.02
					SO_2 [c]	10.0	ppm H2S	0.001	0.004
					VOC	5.5	lb/MMscf	0.003	0.01
					Benzene	0.0021	lb/MMscf	0.000001	0.000004
					CH_2O	0.075	lb/MMscf	0.00004	0.0002

[a] Unless otherwise noted, emission factors are from AP-42 Tables 1.4-1, 1.4-2, and 1.4-3 (dated 7/98) and are based on a fuel HHV of 1020 Btu/scf.

[b] Example calculations for EPN REB-1 follows:

CO (lb/hr) = (Rated Duty, MMBtu/hr)/(Higher Heating Value, Btu/scf)*(Emission Factor, lb/MMscf)

CO (lb/hr) = (0.50 MMBtu/hr)*) / (1020 Btu/scf) * (84 lb/MMscf)

= 0.04 lb/hr CO

CO (T/yr) = (Hourly Emissions, lb/hr)*(Annual Operating Hours, hr/yr)/(2,000 lb/T)

CO (T/yr) = (0.04 lb/hr)*(8,760 hr/yr)/(2,000 lb/T)

= 0.18 T/yr CO

[c] A material balance approach was used to estimate the SO_2 emission rates using the maximum sulfur concentration in the natural gas. H_2S Scavenger liquids are used to bring the fuel gas H_2S concentration below 10 ppm S.

SO_2 (lb/hr) = (Rated Duty, MMBtu/hr)/(Fuel Heating Value, Btu/scf)*(Sulfure, scf H2S/MMscf gas)*(1 lb-mol/379 scf)*(64.06 lb SO_2/lb-mol S)

SO_2 (lb/hr) = (0.50 MMBtu/hr)/(1448 Btu/scf)*(10.0 scf S/MMscf gas)*(1 lb-mol/379 scf)*(34.065 lb H2S/lb-mol)*(64.06 lb SO2/34.065 lb H2S)

= 0.001 lb/hr SO_2

[d] All PM is assumed to be less than 2.5 microns in diameter per footnote "c" of AP-42 Table 1.4-2.

GLYCOL DEHYDRATOR STILL VENT POTENTIAL TO EMIT

DEWITT CENTRAL FACILITY 3 January 1st 2013 throught January 1st 2014

BURLINGTON RESOURCES OIL & GAS COMPANY LP

	Potential to Emit FIN DEHY-SV/EPN REB-1	
Component	**Hourly (lb/hr)**	**Annual (T/yr)**
Hydrogen Sulfide	0.0008	0.0032
Methane	0.0744	0.3276
Ethane	0.0312	0.1367
Propane	0.0248	0.1089
Isobutane	0.0084	0.0364
n-Butane	0.0151	0.0660
Isopentane	0.0079	0.0346
n-Pentane	0.0074	0.0323
n-Hexane	0.0041	0.0175
Cyclohexane	0.0029	0.0126
Other Hexanes	0.0076	0.0333
Heptanes	0.0038	0.0162
Benzene	0.0037	0.0161
Toluene	0.0066	0.0291
Ethylbenzene	0.0002	0.0006
Xylenes	0.0014	0.0057
C8+ Heavies	0.0014	0.0060
Total VOC	**0.0953**	**0.4153**

Note: The emissions from the pressurized flash tank and the condenser vent are routed to the reboiler, which will be running continuously with a 98% combustion efficiency. In the event that the reboiler can not handle the total volume of recycled gas to it, the remainder will be re-directed to flare with a 98% combustion efficiency. Accounting for both the max heater combustion and the max waste gas flare combustions is a built in conservative assumption such that both would not be running at max at the same time.

GRI-GLYCalc VERSION 4.0 - SUMMARY OF INPUT VALUES

Case Name: DEWITT CENTRAL FACILITY
File Name: T:\ConocoPhillips - 507\507-104 EPA 114 Response\04 DeWitt CF 3\DeWitt CF 3 Dehy.ddf
Date: August 05, 2014

DESCRIPTION:

Description: Burlington Resources Dehy Unit

Annual Hours of Operation: 8760.0 hours/yr

WET GAS:

Temperature: 100.00 deg. F
Pressure: 1000.00 psig
Wet Gas Water Content: Saturated

Component	Conc. (vol %)
Carbon Dioxide	1.5470
Hydrogen Sulfide	0.0500
Nitrogen	0.0660
Methane	68.4160
Ethane	13.7110
Propane	6.9330
Isobutane	1.7130
n-Butane	2.9130
Isopentane	1.3010
n-Pentane	1.1500
n-Hexane	0.4920
Cyclohexane	0.1770
Other Hexanes	0.9950
Heptanes	0.3500
Benzene	0.0570
Toluene	0.0940
Ethylbenzene	0.0020
Xylenes	0.0190
C8+ Heavies	0.0640

DRY GAS:

Flow Rate: 8.1 MMSCF/day
Water Content: 7.0 lbs. H2O/MMSCF

LEAN GLYCOL:

Glycol Type: TEG
Water Content: 1.0 wt% H2O
Recirculation Ratio: 0.8 gal/lb H2O

PUMP:

Glycol Pump Type: Gas Injection
Gas Injection Pump Volume Ratio: 0.080 acfm gas/gpm glycol

FLASH TANK:

Flash Control: Combustion device
Flash Control Efficiency: 98.00 %
Temperature: 180.0 deg. F
Pressure: 35.0 psig

REGENERATOR OVERHEADS CONTROL DEVICE:

Control Device: Condenser
Temperature: 120.0 deg. F
Pressure: 14.0 psia

Control Device: Combustion Device
Destruction Efficiency: 98.0 %
Excess Oxygen: 0.0 %
Ambient Air Temperature: 80.0 deg. F

GRI-GLYCalc VERSION 4.0 - AGGREGATE CALCULATIONS REPORT

Case Name: DEWITT CENTRAL FACILITY
File Name: T:\ConocoPhillips - 507\507-104 EPA 114 Response\04 DeWitt CF 3\DeWitt CF 3 Dehy.dd
Date: August 05, 2014

DESCRIPTION:

Description: Burlington Resources Dehy Unit

Annual Hours of Operation: 8760.0 hours/yr

EMISSIONS REPORTS:

CONTROLLED REGENERATOR EMISSIONS

Component	lbs/hr	lbs/day	tons/yr
Hydrogen Sulfide	0.0001	0.002	0.0003
Methane	0.0002	0.006	0.0011
Ethane	0.0002	0.006	0.0011
Propane	0.0004	0.011	0.0019
Isobutane	0.0002	0.004	0.0007
n-Butane	0.0003	0.008	0.0014
Isopentane	0.0001	0.002	0.0005
n-Pentane	0.0001	0.002	0.0004
n-Hexane	<0.0001	0.001	0.0002
Cyclohexane	0.0001	0.002	0.0003
Other Hexanes	0.0001	0.002	0.0004
Heptanes	<0.0001	0.001	0.0001
Benzene	0.0004	0.010	0.0019
Toluene	0.0004	0.010	0.0018
Ethylbenzene	<0.0001	<0.001	<0.0001
Xylenes	<0.0001	0.001	0.0002
C8+ Heavies	<0.0001	<0.001	<0.0001
Total Emissions	0.0028	0.066	0.0121
Total Hydrocarbon Emissions	0.0027	0.065	0.0118
Total VOC Emissions	0.0022	0.053	0.0097
Total HAP Emissions	0.0009	0.022	0.0041
Total BTEX Emissions	0.0009	0.021	0.0039

UNCONTROLLED REGENERATOR EMISSIONS

Component	lbs/hr	lbs/day	tons/yr
Hydrogen Sulfide	0.0048	0.115	0.0210
Methane	0.0122	0.293	0.0534
Ethane	0.0129	0.310	0.0565
Propane	0.0266	0.638	0.1164
Isobutane	0.0112	0.268	0.0490
n-Butane	0.0252	0.605	0.1104
Isopentane	0.0132	0.316	0.0576
n-Pentane	0.0144	0.346	0.0631
n-Hexane	0.0117	0.281	0.0513
Cyclohexane	0.0242	0.581	0.1061
Other Hexanes	0.0171	0.410	0.0748
Heptanes	0.0176	0.423	0.0772
Benzene	0.2294	5.506	1.0049
Toluene	0.5619	13.484	2.4609
Ethylbenzene	0.0165	0.397	0.0725
Xylenes	0.2480	5.952	1.0863
C8+ Heavies	0.0037	0.088	0.0161
Total Emissions	1.2505	30.013	5.4773
Total Hydrocarbon Emissions	1.2457	29.898	5.4563
Total VOC Emissions	1.2206	29.296	5.3464
Total HAP Emissions	1.0675	25.621	4.6758
Total BTEX Emissions	1.0558	25.340	4.6245

FLASH GAS EMISSIONS

Component	lbs/hr	lbs/day	tons/yr
Hydrogen Sulfide	0.0007	0.016	0.0029
Methane	0.0746	1.789	0.3265
Ethane	0.0310	0.743	0.1356
Propane	0.0244	0.586	0.1070
Isobutane	0.0082	0.196	0.0357
n-Butane	0.0148	0.354	0.0646
Isopentane	0.0078	0.187	0.0341
n-Pentane	0.0073	0.175	0.0319
n-Hexane	0.0040	0.095	0.0173
Cyclohexane	0.0028	0.067	0.0123
Other Hexanes	0.0075	0.180	0.0329
Heptanes	0.0037	0.088	0.0161
Benzene	0.0033	0.078	0.0142
Toluene	0.0062	0.150	0.0273
Ethylbenzene	0.0001	0.003	0.0005
Xylenes	0.0013	0.030	0.0055
C8+ Heavies	0.0013	0.032	0.0059
Total Emissions	0.1988	4.770	0.8706
Total Hydrocarbon Emissions	0.1981	4.755	0.8677
Total VOC Emissions	0.0926	2.222	0.4055
Total HAP Emissions	0.0148	0.356	0.0650
Total BTEX Emissions	0.0109	0.261	0.0476

FLASH TANK OFF GAS

Component	lbs/hr	lbs/day	tons/yr
Hydrogen Sulfide	0.0325	0.781	0.1425
Methane	3.7277	89.466	16.3275
Ethane	1.5483	37.160	6.7817
Propane	1.2212	29.309	5.3489
Isobutane	0.4077	9.785	1.7857
n-Butane	0.7376	17.703	3.2308
Isopentane	0.3895	9.349	1.7062
n-Pentane	0.3639	8.733	1.5937
n-Hexane	0.1979	4.751	0.8670
Cyclohexane	0.1405	3.373	0.6155
Other Hexanes	0.3760	9.023	1.6467
Heptanes	0.1837	4.409	0.8047
Benzene	0.1626	3.903	0.7123
Toluene	0.3121	7.490	1.3669
Ethylbenzene	0.0063	0.150	0.0274
Xylenes	0.0629	1.508	0.2753
C8+ Heavies	0.0674	1.617	0.2951
Total Emissions	9.9379	238.509	43.5279
Total Hydrocarbon Emissions	9.9053	237.728	43.3854
Total VOC Emissions	4.6293	111.103	20.2762
Total HAP Emissions	0.7417	17.802	3.2489
Total BTEX Emissions	0.5438	13.051	2.3819

EQUIPMENT REPORTS:

CONDENSER AND COMBUSTION DEVICE

Condenser Outlet Temperature: 120.00 deg. F
Condenser Pressure: 14.00 psia
Condenser Duty: 5.37e-004 MM BTU/hr
Hydrocarbon Recovery: 0.09 bbls/day
Produced Water: 1.17 bbls/day
Ambient Temperature: 80.00 deg. F
Excess Oxygen: 0.00 %
Combustion Efficiency: 98.00 %
Supplemental Fuel Requirement: 5.37e-004 MM BTU/hr

Component	Emitted	Destroyed

Hydrogen Sulfide	1.42%	98.58%
Methane	1.98%	98.02%
Ethane	1.91%	98.09%
Propane	1.65%	98.35%
Isobutane	1.40%	98.60%
n-Butane	1.25%	98.75%
Isopentane	0.78%	99.22%
n-Pentane	0.66%	99.34%
n-Hexane	0.35%	99.65%
Cyclohexane	0.26%	99.74%
Other Hexanes	0.48%	99.52%
Heptanes	0.14%	99.86%
Benzene	0.19%	99.81%
Toluene	0.07%	99.93%
Ethylbenzene	0.02%	99.98%
Xylenes	0.02%	99.98%
C8+ Heavies	0.00%	100.00%

ABSORBER

Calculated Absorber Stages: 1.74
Specified Dry Gas Dew Point: 7.00 lbs. H2O/MMSCF
Temperature: 100.0 deg. F
Pressure: 1000.0 psig
Dry Gas Flow Rate: 8.1000 MMSCF/day
Glycol Losses with Dry Gas: 0.6332 lb/hr
Wet Gas Water Content: Saturated
Calculated Wet Gas Water Content: 58.29 lbs. H2O/MMSCF
Specified Lean Glycol Recirc. Ratio: 0.81 gal/lb H2O

Component	Remaining in Dry Gas	Absorbed in Glycol
Water	12.00%	88.00%
Carbon Dioxide	99.96%	0.04%
Hydrogen Sulfide	99.79%	0.21%
Nitrogen	100.00%	0.00%
Methane	100.00%	0.00%
Ethane	99.99%	0.01%
Propane	99.99%	0.01%
Isobutane	99.99%	0.01%
n-Butane	99.98%	0.02%
Isopentane	99.99%	0.01%
n-Pentane	99.98%	0.02%
n-Hexane	99.98%	0.02%
Cyclohexane	99.91%	0.09%
Other Hexanes	99.98%	0.02%
Heptanes	99.97%	0.03%
Benzene	99.04%	0.96%
Toluene	98.90%	1.10%
Ethylbenzene	98.83%	1.17%
Xylenes	98.30%	1.70%
C8+ Heavies	99.96%	0.04%

FLASH TANK

Flash Control: Combustion device
Flash Control Efficiency: 98.00 %
Flash Temperature: 180.0 deg. F
Flash Pressure: 35.0 psig

Component	Left in Glycol	Removed in Flash Gas
Water	98.18%	1.82%
Carbon Dioxide	2.94%	97.06%
Hydrogen Sulfide	12.85%	87.15%
Nitrogen	0.30%	99.70%
Methane	0.33%	99.67%
Ethane	0.83%	99.17%
Propane	2.13%	97.87%
Isobutane	2.67%	97.33%
n-Butane	3.30%	96.70%

Isopentane	3.40%	96.60%
n-Pentane	3.96%	96.04%
n-Hexane	5.76%	94.24%
Cyclohexane	16.68%	83.32%
Other Hexanes	4.65%	95.35%
Heptanes	8.96%	91.04%
Benzene	60.52%	39.48%
Toluene	67.03%	32.97%
Ethylbenzene	75.34%	24.66%
Xylenes	82.34%	17.66%
C8+ Heavies	11.45%	88.55%

REGENERATOR

No Stripping Gas used in regenerator.

Component	Remaining in Glycol	Distilled Overhead
Water	7.18%	92.82%
Carbon Dioxide	0.00%	100.00%
Hydrogen Sulfide	0.00%	100.00%
Nitrogen	0.00%	100.00%
Methane	0.00%	100.00%
Ethane	0.00%	100.00%
Propane	0.00%	100.00%
Isobutane	0.00%	100.00%
n-Butane	0.00%	100.00%
Isopentane	4.02%	95.98%
n-Pentane	3.99%	96.01%
n-Hexane	3.21%	96.79%
Cyclohexane	13.90%	86.10%
Other Hexanes	6.90%	93.10%
Heptanes	2.55%	97.45%
Benzene	7.98%	92.02%
Toluene	11.45%	88.55%
Ethylbenzene	13.44%	86.56%
Xylenes	15.37%	84.63%
C8+ Heavies	57.90%	42.10%

STREAM REPORTS:

WET GAS STREAM

Temperature: 100.00 deg. F
Pressure: 1014.70 psia
Flow Rate: 3.38e+005 scfh

Component	Conc. (vol%)	Loading (lb/hr)
Water	1.23e-001	1.97e+001
Carbon Dioxide	1.54e+000	6.05e+002
Hydrogen Sulfide	4.99e-002	1.52e+001
Nitrogen	6.59e-002	1.64e+001
Methane	6.83e+001	9.76e+003
Ethane	1.37e+001	3.67e+003
Propane	6.92e+000	2.72e+003
Isobutane	1.71e+000	8.85e+002
n-Butane	2.91e+000	1.51e+003
Isopentane	1.30e+000	8.35e+002
n-Pentane	1.15e+000	7.38e+002
n-Hexane	4.91e-001	3.77e+002
Cyclohexane	1.77e-001	1.32e+002
Other Hexanes	9.93e-001	7.62e+002
Heptanes	3.49e-001	3.12e+002
Benzene	5.69e-002	3.96e+001
Toluene	9.38e-002	7.70e+001
Ethylbenzene	2.00e-003	1.89e+000
Xylenes	1.90e-002	1.79e+001

C8+ Heavies	6.39e-002	9.69e+001
Total Components	100.00	2.26e+004

DRY GAS STREAM

Temperature: 100.00 deg. F
Pressure: 1014.70 psia
Flow Rate: 3.38e+005 scfh

Component	Conc. (vol%)	Loading (lb/hr)
Water	1.47e-002	2.36e+000
Carbon Dioxide	1.55e+000	6.05e+002
Hydrogen Sulfide	4.99e-002	1.51e+001
Nitrogen	6.60e-002	1.64e+001
Methane	6.84e+001	9.76e+003
Ethane	1.37e+001	3.67e+003
Propane	6.93e+000	2.72e+003
Isobutane	1.71e+000	8.85e+002
n-Butane	2.91e+000	1.51e+003
Isopentane	1.30e+000	8.34e+002
n-Pentane	1.15e+000	7.38e+002
n-Hexane	4.92e-001	3.77e+002
Cyclohexane	1.77e-001	1.32e+002
Other Hexanes	9.94e-001	7.62e+002
Heptanes	3.50e-001	3.12e+002
Benzene	5.64e-002	3.92e+001
Toluene	9.29e-002	7.62e+001
Ethylbenzene	1.98e-003	1.87e+000
Xylenes	1.87e-002	1.76e+001
C8+ Heavies	6.39e-002	9.69e+001
Total Components	100.00	2.26e+004

LEAN GLYCOL STREAM

Temperature: 100.00 deg. F
Flow Rate: 2.33e-001 gpm

Component	Conc. (wt%)	Loading (lb/hr)
TEG	9.89e+001	1.30e+002
Water	1.00e+000	1.31e+000
Carbon Dioxide	1.86e-011	2.44e-011
Hydrogen Sulfide	2.44e-012	3.20e-012
Nitrogen	4.90e-014	6.44e-014
Methane	7.98e-018	1.05e-017
Ethane	9.82e-008	1.29e-007
Propane	9.07e-009	1.19e-008
Isobutane	2.46e-009	3.24e-009
n-Butane	4.42e-009	5.80e-009
Isopentane	4.19e-004	5.50e-004
n-Pentane	4.56e-004	5.99e-004
n-Hexane	2.95e-004	3.88e-004
Cyclohexane	2.98e-003	3.91e-003
Other Hexanes	9.63e-004	1.26e-003
Heptanes	3.51e-004	4.61e-004
Benzene	1.52e-002	1.99e-002
Toluene	5.53e-002	7.26e-002
Ethylbenzene	1.96e-003	2.57e-003
Xylenes	3.43e-002	4.50e-002
C8+ Heavies	3.84e-003	5.04e-003
Total Components	100.00	1.31e+002

RICH GLYCOL AND PUMP GAS STREAM

Temperature: 100.00 deg. F
Pressure: 1014.70 psia
Flow Rate: 2.93e-001 gpm
NOTE: Stream has more than one phase.

Component	Conc. (wt%)	Loading (lb/hr)
TEG	8.10e+001	1.30e+002
Water	1.17e+001	1.87e+001
Carbon Dioxide	2.85e-001	4.57e-001
Hydrogen Sulfide	2.33e-002	3.73e-002
Nitrogen	4.01e-003	6.41e-003
Methane	2.34e+000	3.74e+000
Ethane	9.75e-001	1.56e+000
Propane	7.79e-001	1.25e+000
Isobutane	2.62e-001	4.19e-001
n-Butane	4.77e-001	7.63e-001
Isopentane	2.52e-001	4.03e-001
n-Pentane	2.37e-001	3.79e-001
n-Hexane	1.31e-001	2.10e-001
Cyclohexane	1.05e-001	1.69e-001
Other Hexanes	2.46e-001	3.94e-001
Heptanes	1.26e-001	2.02e-001
Benzene	2.57e-001	4.12e-001
Toluene	5.91e-001	9.47e-001
Ethylbenzene	1.58e-002	2.54e-002
Xylenes	2.22e-001	3.56e-001
C8+ Heavies	4.75e-002	7.61e-002
Total Components	100.00	1.60e+002

FLASH TANK OFF GAS STREAM

Temperature: 180.00 deg. F
Pressure: 49.70 psia
Flow Rate: 1.47e+002 scfh

Component	Conc. (vol%)	Loading (lb/hr)
Water	4.85e+000	3.40e-001
Carbon Dioxide	2.59e+000	4.43e-001
Hydrogen Sulfide	2.46e-001	3.25e-002
Nitrogen	5.88e-002	6.39e-003
Methane	5.98e+001	3.73e+000
Ethane	1.33e+001	1.55e+000
Propane	7.13e+000	1.22e+000
Isobutane	1.81e+000	4.08e-001
n-Butane	3.27e+000	7.38e-001
Isopentane	1.39e+000	3.90e-001
n-Pentane	1.30e+000	3.64e-001
n-Hexane	5.91e-001	1.98e-001
Cyclohexane	4.30e-001	1.41e-001
Other Hexanes	1.12e+000	3.76e-001
Heptanes	4.72e-001	1.84e-001
Benzene	5.36e-001	1.63e-001
Toluene	8.72e-001	3.12e-001
Ethylbenzene	1.52e-002	6.25e-003
Xylenes	1.52e-001	6.29e-002
C8+ Heavies	1.02e-001	6.74e-002
Total Components	100.00	1.07e+001

FLASH TANK GLYCOL STREAM

Temperature: 180.00 deg. F
Flow Rate: 2.69e-001 gpm

Component	Conc. (wt%)	Loading (lb/hr)	(ppm)
TEG	8.68e+001	1.30e+002	867869.
Water	1.23e+001	1.83e+001	122648.
Carbon Dioxide	8.99e-003	1.34e-002	90.
Hydrogen Sulfide	3.21e-003	4.80e-003	32.
Nitrogen	1.27e-005	1.89e-005	0.
Methane	8.16e-003	1.22e-002	82.

Ethane	8.64e-003	1.29e-002	86.
Propane	1.78e-002	2.66e-002	178.
Isobutane	7.49e-003	1.12e-002	75.
n-Butane	1.69e-002	2.52e-002	169.
Isopentane	9.18e-003	1.37e-002	92.
n-Pentane	1.01e-002	1.50e-002	101.
n-Hexane	8.11e-003	1.21e-002	81.
Cyclohexane	1.88e-002	2.81e-002	188.
Other Hexanes	1.23e-002	1.83e-002	123.
Heptanes	1.21e-002	1.81e-002	121.
Benzene	1.67e-001	2.49e-001	1669.
Toluene	4.25e-001	6.35e-001	4248.
Ethylbenzene	1.28e-002	1.91e-002	128.
Xylenes	1.96e-001	2.93e-001	1962.
C8+ Heavies	5.83e-003	8.71e-003	58.
Total Components	100.00	1.49e+002	1000000.

FLASH GAS EMISSIONS

Flow Rate: 6.27e+002 scfh
Control Method: Combustion Device
Control Efficiency: 98.00

Component	Conc. (vol%)	Loading (lb/hr)
Water	5.99e+001	1.78e+001
Carbon Dioxide	3.96e+001	2.88e+001
Hydrogen Sulfide	1.15e-003	6.51e-004
Nitrogen	1.38e-002	6.39e-003
Methane	2.81e-001	7.46e-002
Ethane	6.23e-002	3.10e-002
Propane	3.35e-002	2.44e-002
Isobutane	8.48e-003	8.15e-003
n-Butane	1.54e-002	1.48e-002
Isopentane	6.53e-003	7.79e-003
n-Pentane	6.10e-003	7.28e-003
n-Hexane	2.78e-003	3.96e-003
Cyclohexane	2.02e-003	2.81e-003
Other Hexanes	5.28e-003	7.52e-003
Heptanes	2.22e-003	3.67e-003
Benzene	2.52e-003	3.25e-003
Toluene	4.10e-003	6.24e-003
Ethylbenzene	7.12e-005	1.25e-004
Xylenes	7.16e-004	1.26e-003
C8+ Heavies	4.78e-004	1.35e-003
Total Components	100.00	4.69e+001

REGENERATOR OVERHEADS STREAM

Temperature: 212.00 deg. F
Pressure: 14.70 psia
Flow Rate: 3.64e+002 scfh

Component	Conc. (vol%)	Loading (lb/hr)
Water	9.84e+001	1.70e+001
Carbon Dioxide	3.18e-002	1.34e-002
Hydrogen Sulfide	1.47e-002	4.80e-003
Nitrogen	7.05e-005	1.89e-005
Methane	7.92e-002	1.22e-002
Ethane	4.47e-002	1.29e-002
Propane	6.28e-002	2.66e-002
Isobutane	2.00e-002	1.12e-002
n-Butane	4.52e-002	2.52e-002
Isopentane	1.90e-002	1.32e-002
n-Pentane	2.08e-002	1.44e-002
n-Hexane	1.42e-002	1.17e-002
Cyclohexane	3.00e-002	2.42e-002
Other Hexanes	2.06e-002	1.71e-002
Heptanes	1.83e-002	1.76e-002

Benzene	3.06e-001	2.29e-001
Toluene	6.35e-001	5.62e-001
Ethylbenzene	1.62e-002	1.65e-002
Xylenes	2.43e-001	2.48e-001
C8+ Heavies	2.24e-003	3.67e-003
Total Components	100.00	1.83e+001

CONDENSER PRODUCED WATER STREAM

Temperature: 120.00 deg. F
Flow Rate: 3.40e-002 gpm

Component	Conc. (wt%)	Loading (lb/hr)	(ppm)
Water	9.99e+001	1.70e+001	998960.
Carbon Dioxide	6.24e-003	1.06e-003	62.
Hydrogen Sulfide	5.80e-003	9.86e-004	58.
Nitrogen	2.50e-007	4.25e-008	0.
Methane	3.14e-004	5.35e-005	3.
Ethane	3.66e-004	6.23e-005	4.
Propane	6.70e-004	1.14e-004	7.
Isobutane	1.31e-004	2.23e-005	1.
n-Butane	3.48e-004	5.92e-005	3.
Isopentane	8.05e-005	1.37e-005	1.
n-Pentane	7.99e-005	1.36e-005	1.
n-Hexane	2.88e-005	4.90e-006	0.
Cyclohexane	2.45e-004	4.17e-005	2.
Other Hexanes	4.60e-005	7.83e-006	0.
Heptanes	9.38e-006	1.60e-006	0.
Benzene	4.75e-002	8.09e-003	475.
Toluene	3.73e-002	6.34e-003	373.
Ethylbenzene	2.76e-004	4.69e-005	3.
Xylenes	4.55e-003	7.74e-004	45.
C8+ Heavies	3.11e-009	5.30e-010	0.
Total Components	100.00	1.70e+001	1000000.

CONDENSER RECOVERED OIL STREAM

Temperature: 120.00 deg. F
Flow Rate: 2.58e-003 gpm

Component	Conc. (wt%)	Loading (lb/hr)
Water	6.32e-002	6.93e-004
Carbon Dioxide	2.90e-002	3.18e-004
Hydrogen Sulfide	3.60e-002	3.95e-004
Nitrogen	3.82e-005	4.19e-007
Methane	7.23e-003	7.93e-005
Ethane	4.60e-002	5.04e-004
Propane	4.16e-001	4.56e-003
Isobutane	3.02e-001	3.31e-003
n-Butane	8.60e-001	9.43e-003
Isopentane	7.29e-001	7.99e-003
n-Pentane	8.78e-001	9.63e-003
n-Hexane	8.79e-001	9.64e-003
Cyclohexane	1.92e+000	2.11e-002
Other Hexanes	1.18e+000	1.30e-002
Heptanes	1.50e+000	1.64e-002
Benzene	1.82e+001	2.00e-001
Toluene	4.88e+001	5.35e-001
Ethylbenzene	1.49e+000	1.63e-002
Xylenes	2.23e+001	2.45e-001
C8+ Heavies	3.34e-001	3.67e-003
Total Components	100.00	1.10e+000

CONDENSER VENT STREAM

Temperature: 120.00 deg. F
Pressure: 14.00 psia
Flow Rate: 1.39e+000 scfh

Component	Conc. (vol%)	Loading (lb/hr)
Water	1.22e+001	8.04e-003
Carbon Dioxide	7.46e+000	1.20e-002
Hydrogen Sulfide	2.73e+000	3.42e-003
Nitrogen	1.80e-002	1.85e-005
Methane	2.05e+001	1.21e-002
Ethane	1.12e+001	1.23e-002
Propane	1.35e+001	2.19e-002
Isobutane	3.68e+000	7.85e-003
n-Butane	7.37e+000	1.57e-002
Isopentane	1.95e+000	5.15e-003
n-Pentane	1.80e+000	4.77e-003
n-Hexane	6.57e-001	2.08e-003
Cyclohexane	1.01e+000	3.13e-003
Other Hexanes	1.30e+000	4.11e-003
Heptanes	3.32e-001	1.22e-003
Benzene	7.53e+000	2.16e-002
Toluene	6.08e+000	2.06e-002
Ethylbenzene	5.18e-002	2.02e-004
Xylenes	6.16e-001	2.40e-003
C8+ Heavies	1.03e-004	6.40e-007
Total Components	100.00	1.59e-001

COMBUSTION DEVICE OFF GAS STREAM

Temperature: 1000.00 deg. F
Pressure: 14.70 psia
Flow Rate: 2.24e-002 scfh

Component	Conc. (vol%)	Loading (lb/hr)
Hydrogen Sulfide	3.40e+000	6.83e-005
Methane	2.55e+001	2.41e-004
Ethane	1.39e+001	2.47e-004
Propane	1.68e+001	4.38e-004
Isobutane	4.59e+000	1.57e-004
n-Butane	9.17e+000	3.14e-004
Isopentane	2.42e+000	1.03e-004
n-Pentane	2.25e+000	9.55e-005
n-Hexane	8.18e-001	4.15e-005
Cyclohexane	1.26e+000	6.25e-005
Other Hexanes	1.62e+000	8.22e-005
Heptanes	4.13e-001	2.44e-005
Benzene	9.37e+000	4.31e-004
Toluene	7.57e+000	4.11e-004
Ethylbenzene	6.45e-002	4.03e-006
Xylenes	7.67e-001	4.80e-005
C8+ Heavies	1.28e-004	1.28e-008
Total Components	100.00	2.77e-003
Ethylbenzene	6.38e-002	1.88e-005
Xylenes	7.09e-001	2.09e-004
C8+ Heavies	3.28e-004	1.55e-007
Total Components	100.00	1.31e-002
C8+ Heavies	3.28e-004	1.55e-007
Total Components	100.00	1.31e-002

SUMMARY OF TANKS SENT TO FLARE POTENTIAL TO EMIT

DEWITT CENTRAL FACILITY 3 January 1st 2013 throught January 1st 2014

BURLINGTON RESOURCES OIL & GAS COMPANY LP

			VOC Emissions								Benzene Emissions								H_2S Emissions[c]			
			Flash Emissions[a]		WB Emissions[b]		Uncontrolled Total		Controlled Total[d]		Flash Emissions[a]		WB Emissions[b]		Uncontrolled Total		Controlled Total[d]		Uncontrolled Total		Controlled Total[d]	
EPN	**FIN**	**Description**	**Hourly (lb/hr)**	**Annual (T/yr)**	**Hourly (lb/hr)**	**Annual (T/yr)**	**Hourly (lb/hr)**	**Annual (T/yr)**	**Hourly (lb/hr)**	**Annual (T/yr)**	**Hourly (lb/hr)**	**Annual (T/yr)**	**Hourly (lb/hr)**	**Annual (T/yr)**	**Hourly (lb/hr)**	**Annual (T/yr)**	**Hourly (lb/hr)**	**Annual (T/yr)**	**Hourly (lb/hr)**	**Annual (T/yr)**	**Hourly (lb/hr)**	**Annual (T/yr)**
FL-1	TK-01 TK-02	500 bbl Condensate Storage Tanks	3.18	13.93	11.02	1.81	14.20	15.74	0.28	0.31	0.01	0.04	0.11	0.02	0.12	0.06	0.002	0.001	0.002	0.01	0.00004	0.0002
FL-1	TK-03	500 bbl Slop Storage Tank	--	--	11.02	1.85	11.02	1.85	0.22	0.04	--	--	0.11	0.02	0.11	0.02	0.002	0.0004	--	--	--	--
FL-1	TK-04	500 bbl Produced Water Storage Tank	2.73	11.96	0.11	0.03	2.84	11.99	0.06	0.24	0.01	0.04	0.001	0.0002	0.01	0.04	0.0002	0.001	0.002	0.01	0.00004	0.0002
TK-AF[e]	TK-AF[e]	Antifreeze Liquid Storage	--	--	0.50	0.01	0.50	0.01	--	--	--	--	--	--	--	--	--	--	--	--	--	--
TK-LO[f]	TK-LO[e]	Lube Oil Liquid Storage	--	--	0.0002	0.000002	0.0002	0.000002	--	--	--	--	--	--	--	--	--	--	--	--	--	--
TK-SCAV[f]	TK-SCAV[f]	H_2S Scavenger Liquid Storage	--	--	--	--	<0.01	<0.01	--	--	--	--	--	--	--	--	--	--	--	--	--	--

Notes:

[a] VOC and Benzene Flash Emissions are calculated using the WinSim stream simulation program. Data inputs included the pressurized stream data and throughputs represented in this submittal. See the pages at the end of this attachment for a printout of the data inputs and emissions reports.

[b] The Working/Breathing emissions for tanks TK-01 thourgh TK-04 are calculated using AP 42 Chapter 7 calculations with data inputs from the stream data and throughputs. See the following pages for the represented calculations.

[c] The Ideal Gas Law was used to estimate the H2S emission rates using the maximum sulfur concentration in the gas coming off the tanks (500 ppm). An example calculation for hourly H2S emissions from FIN TK-04 follows:

H_2S (lb/hr) = (% Vol H_2S in stream) * (Total Volumetric Flow of Gas, scf/hr) * (1 atm STP) * (34.0798 lb/lb-mol H2S) / (1.314, atm-scf/lb-mol-K) / (298 K)

H_2S (lb/hr) = (500 ppm /10^6) * (35.66 scf/hr) * (1 atm) * (34.0789 lb/lbmol H2S) / (1.314, atm-scf/lb-mol-K) / (298 K)

H_2S (lb/hr) = 0.002 lb/hr

[d] All VOC tank emissions are routed to the flare control device with a capture and control efficiency of 98%. H_2S emissions are captured at 98% and then 98% converted to SO_2 during combustion.

[e] Working and breathing emissions for the Antifreeze and Lube Oil tanks were determined using Tanks 4.09d simulation software. The size and number of TK-AF and TK-LO tanks may vary, but the total throughput of the liquid and the associated VOC emissions will not exceed the proposed emission rate. Printouts from the software can be found on the following pages. An example calculation of the hourly emissions for FIN TK-AF follows:

VOC(lb/hr)= [((Breathing Loss, lb/yr) / (8,760 hr/yr)) + ((Working Loss, lb/yr) / (Number of turnovers/yr) / (Turnovers per hour))] * No. of tanks

VOC(lb/hr)= ((8.909 lb/yr) / (8,760 hr/yr)) + ((5.9832 lb/yr) / (12 turnovers/yr) / (1 turnover per hour))

VOC(lb/hr)= 0.50 lb/hr

An example calculation of the annual emissions for FIN TK-AF follows:

VOC(T/yr)= ((Working Loss, lb/yr) + (Breathing Loss, lb/yr)) / (2,000 ton/yr)) * No. of Tanks

VOC(T/yr)= ((5.9832 lb/yr) + (8.909 lb/yr)) / (2,000 ton/yr)

VOC(T/yr)= 0.01 lb/hr

[f] The size and number of the H_2S Scavenger Liquid Storage Tanks may vary, but the total throughput of the liquid and the associated VOC emissions will not exceed the proposed negligible emission rate.

CALCULATION OF STORAGE TANK WORKING AND BREATHING POTENTIAL TO EMIT

DEWITT CENTRAL FACILITY 3 January 1st 2013 throught January 1st 2014

BURLINGTON RESOURCES OIL & GAS COMPANY LP

Variable	Description	Units	Value
L_T	total loss = Ls + Lw	Ton/yr	See Table
L_S	standing loss = 365 Vv Wv Ke Ks	lb/yr	See Table
L_W	working loss = 0.001 Mv Pv Q Kn Kp	lb/yr	See Table
L_H	working loss = 0.001 Mv Pmax Qh	lb/hr	See Table
	Roof Construction		Cone
RVP	Condensate Reid Vapor Pressure	psia	13.77
ΔPb	Breather vent pressure range	psi	0.06
I	Solar insolation factor	Btu/ft2-day	1521
P_A	Atmospheric Pressure	psia	14.7
Mv	Vapor Molecular Weight	lb/lb-mol	40
T	Annual Average Temperature	°F	72.1
T_{AX}	Daily Maximum Ambient Temperature	°R	541.6
T_{AN}	Daily Minimum Ambient Temperature	°R	522.5
ΔT_A	Daily average ambient temperature range	°R	19.1
Kp	Product factor		1

		Tank Specifications							Material Specifications																	VOC		Benzene	
		V/H	D	H/L	Capacity	Color		α	Mv	P_{MAX}	Q^2		ΔTv	Hvo	Vv	T_{LA}	P_{VA}	Wv	ΔPv	Ke	Ks	Kn	L_S	L_W	L_T	L_H	L_T	L_H
Material	No. of Tanks	Tank Type	Tank Diameter (ft)	Tank Height/ Length (ft)	Tank Capacity (bbl)	Paint Color	Paint Conditions	Paint Solar Absorbance Factor	Vapor Molecular Weight	Reid Vapor Pressure (psia)	Max. Hourly Thruput (bbl/hr)	Annual thruput (bbl)	Daily Vapor Temp. Range °F	Vapor Space Outage (ft)	Vapor Space Volume (ft3)	Daily Average Liquid Surface Temp °R	Average Vapor Pressure (psia)	Vapor Density (lb/ft3)	Daily Vapor Pressure Range	Vapor Space Expan. Factor	Vented Vapor Sat. Factor	Turnover Factor	Standing Loss per tank (lb/yr)	Working Loss per tank (lb/yr)	Total Loss (lb/hr)	Total Loss (T/yr)	Total Loss (lb/hr)	Total Loss (T/yr)
Condensate	2	V	12	25	500	Gray	Good	0.54	40	13.77	20	5,840	36.75	12.63	1428.4	539.8	15.456	0.10673	3.96891	-5.1024	0.09	1.00	0.00	3,610.52	**11.02**	**1.81**	**0.11**	**0.02**
Slop	1	V	12	25	500	Gray	Good	0.54	40	13.77	20	6,000	36.75	12.63	1428.4	539.8	15.456	0.10673	3.96891	-5.1024	0.09	1.00	0.00	3,709.44	**11.02**	**1.85**	**0.11**	**0.02**
PW	1	V	12	25	500	Gray	Good	0.54	40	0.138	20	73,000	36.75	12.63	1428.4	539.8	0.042	0.00029	0.02561	0.0662	0.97	0.37	9.71	45.38	**0.11**	**0.03**	**0.001**	**0.0002**

NOTE: Tank working and breathing emissions are based on the equations found in EPA AP 42 Chapter 7. All factors used are represented in the table on this page. The Condensate Reid Vapor Pressure and Vapor Molecular Weight are determined based on the WinSim condensate stream and Off Gas stream. All other variables are found in AP 42 Chapter 7 or are default unit values.

CALCULATION OF TRUCK LOADING POTENTIAL TO EMIT

DEWITT CENTRAL FACILITY 3 January 1st 2013 throught January 1st 2014

BURLINGTON RESOURCES OIL & GAS COMPANY LP

Sample Calculations for condensate and slop:

Loading Loss (lb/Mgal) = 12.46 * S * P * M / T (AP-42 Section 5.2)
Maximum Loading Loss = 12.46 * 0.60 * 13.770 * 40 / 560 = 7.353 lb/Mgal

Hourly Uncollected Emissions PTE = (Hourly Throughput, Mgal/hr) * (Maximum Loading Loss, lb/Mgal) * (1 - Capture Efficiency)
Hourly Uncollected Emissions PTE = (8.19 Mgal/hr) * (7.353 lb/Mgal) * (1 - 0.987) = 0.78 lb/hr

Hourly PTE = ((Hourly Throughput, Mgal/hr) * (Maximum Loading Loss, lb/Mgal) * (Capture Efficiency) * (1 - Control Efficiency)) + (Hourly Uncollected Loading Emissions, (lb/hr))
Hourly PTE = (8.19 Mgal/hr) * (7.353 lb/Mgal) * (0.987) * (1 - 0.98) + (0.78 lb/hr) = 1.97 lb/hr

Annual Emissions = ((Annual Throughput, Mgal/yr) * (Average Loading Loss, lb/Mgal) * (Capture Efficiency) * (1 - Control Efficiency)) + (Annual Uncollected Loading Emissions, lb/yr)) / (2000 lb/T)
Annual Emissions = (497.28 Mgal/yr) * (7.367 lb/Mgal) * (0.987) * (1 - 0.98) + (47.63 lb/yr) / (2000 lb/T) = 0.06 T/yr

															VOC		Benzene	
FIN	EPN	Facility Name	S	P @ 560 °R (psia)	P @531.7 °R (psia)	M	Maximum Loading Loss (lb/Mgal)	Average Loading Loss (lb/Mgal)	Hourly Throughput (Mgal/hr)	Annual Throughput (Mgals/yr)	Capture Efficiency	Hourly Uncollected Loading Emissions (lb/hr)	Annual Uncollected Loading Emissions (lb/yr))	Control Efficiency	Hourly PTE (lb/hr)	Annual PTE (T/yr)	Hourly PTE (lb/hr)	Annual PTE (T/yr)
TRUCK1	FL-1	Condensate and Slop Tank Truck Loading	0.60	13.77	13.099	40	7.353	7.367	8.19	497.28	0.987	0.78	47.63	0.98	1.97	0.06	0.02	0.001
TRUCK2	FL-1	Produced Water Tank Truck Loading	0.60	0.14	0.029	40	0.075	0.079	8.19	3,066.00	0.987	0.01	3.15	0.98	0.02	0.004	0.0001	0.00002

Daily maximum and daily minimum ambient temperature from Tanks 4.09d for this area's annual averages (79.5and 57.725, for average of 68.62).

Annual Average Condensate Vapor Pressure at T_{LA} :

P = exp{ [(2799/(T+459.6) - 2.227]log10(RVP) - 7261/(T+459.6) + 12.82}
exp{ [(2799/(68.62+459.6) - 2.227]log10(13.77) - 7261/(68.62+459.6) + 12.82}
13.099 psia

Annual Average Produced Water Vapor Pressure at T_{LA} :

P = exp{ [(2799/(T+459.6) - 2.227]log10(RVP) - 7261/(T+459.6) + 12.82}
exp{ [(2799/(68.62+459.6) - 2.227]log10(13.77*.01) - 7261/(68.62+459.6) + 12.82}
0.029 psia

NOTE: Capture Efficiency of 98.7% represented based upon TCEQ Guidance regarding trucks that are utlizing NSPS XX Testing.

SUMMARY OF PROCESS FLARE FUEL GAS COMBUSTION AND
WASTE GAS COMBUSTION POTENTIAL TO EMIT- NORMAL OPERATIONS

DEWITT CENTRAL FACILITY 3 January 1st 2013 throught January 1st 2014

BURLINGTON RESOURCES OIL & GAS COMPANY LP

EPN	FIN	Description	CO		NO_X		SO_2		H_2S		VOC		Benzene	
			(lb/hr)	(T/yr)	(lb/hr)	(T/yr)	(lb/hr)	(T/yr)	(lb/hr)	(T/yr)	(lb/hr)	(T/yr)	(lb/hr)	(T/yr)
FL-1	FL-1	Pilot Gas Combustion	0.01	0.04	0.003	0.01	0.001	0.004	0.0000004	0.000002	0.0001	0.0004	0.00000003	0.0000001
FL-1	FL-1	Flare Assist Gas Combustion	0.44	1.93	0.22	0.96	0.10	0.44	0.00003	0.0001	0.01	0.04	0.000003	0.00001
FL-1	FL-1	Waste Gas Combustion	1.46	3.51	0.72	1.76	0.01	0.05	0.0001	0.0005	--	--	--	--
		Totals:	**1.91**	**5.48**	**0.94**	**2.73**	**0.11**	**0.49**	**0.0001**	**0.001**	**0.01**	**0.04**	**0.000003**	**0.00001**

NOTE: Pilot Gas Combustion and Flare Assist Gas Combustion calculations are shown on the following page. Waste Gas Combustion shown here is the combined sum of the waste gas from the Dehy waste stream, Condensate and Produced Water tanks, and loading operations shown on subsequent pages.

CALCULATION OF FLARE PILOT GAS and FLARE ASSIST GAS POTENTIAL TO EMIT

DEWITT CENTRAL FACILITY 3 January 1st 2013 throught January 1st 2014

BURLINGTON RESOURCES OIL & GAS COMPANY LP

EPN	FIN	Description	LHV (Btu/scf)	Heat Release scf/hr	Operating Hours (hr/yr)	Pollutant	Emission Factors	Units	Emission Rates Hourly [a] (lb/hr)	Emission Rates Annual [b] (T/yr)
FL-1	FL-1	Flare 1- Process Pilot Gas Combustion	1,292	15	8,760	CO	0.2755	lb/MMBtu	0.01	0.04
						NO_X	0.138	lb/MMBtu	0.003	0.01
						$PM/PM_{10}/PM_{2.5}$	-- [c]	--	--	--
						SO_2	500	ppm H_2S	0.001	0.004
						H_2S	500	ppm H_2S	0.0000004	0.000002
						VOC	5.5	lb/MMscf	0.0001	0.0004
						Benzene	0.0021	lb/MMscf	0.00000003	0.0000001
FL-1	FL-1	Flare 1- Process Flare Assist Gas Combustion	1,292	1,250	8,760	CO	0.2755	lb/MMBtu	0.44	1.93
						NO_X	0.138	lb/MMBtu	0.22	0.96
						$PM/PM_{10}/PM_{2.5}$	-- [c]	--	--	--
						SO_2	500	ppm H_2S	0.10	0.44
						H_2S	500	ppm H_2S	0.00003	0.0001
						VOC	5.5	lb/MMscf	0.01	0.04
						Benzene	0.0021	lb/MMscf	0.000003	0.00001

[a] Emission Factors for CO and NO_X are based upon the Draft TNRCC Guidance Document for Flares and Vapor Oxidizers (dated 10/00) for other high-Btu flares. An example calculation for hourly CO emissions for EPN FL-1 follows:

CO (lb/hr) = (Heat Release, scf/hr) * (Lower Heating Value, Btu/scf) * ($MM/10^6$)*(Emission Factor, lb/MMBtu)

CO (lb/hr) = (15 scf/hr) * (1,292 Btu/scf) * (MM/10^6)*(0.2755 lb/MMBtu)

= 0.01 lb/hr CO

The Emission Factors for VOC and Benzene were based upon AP-42 Table 1.4-2 and 1.4-3 (dated 7/98). An example calculation for hourly VOC emissions for EPN FL-1 follows:

VOC (lb/hr) = (Heat Release, scf/hr) * ($MM/10^6$) * (Emission Factor, lb/MMscf)

VOC (lb/hr) = (15 scf/hr) * (MM/10^6) * (5.5 lb/MMscf)

= 0.0001 lb/hr VOC

A material balance approach was used to estimate the SO2 and H2S emission rates using the maximum sulfur concentration in the natural gas. As shown in Figure 6-1, H2S concentration at the site is conservatively represented at 500 ppm. When used as a pilot gas or flare assist gas, 98% of this concentration will be converted to SO2, and 2% will remain uncombusted and unconverted. An example calculation for hourly SO2 emissions for the pilot gas of EPN FL-01 follows:

SO_2 (lb/hr) = Heat Release (scf/hr)*(Sulfur Content, ppmv)*(98% conversion to SO_2)*(1 lb-mol/379 scf)*(34.065 lb H2S/lb-mol)*(64.06 lb SO_2/34.065 lb H2S)

SO_2 (lb/hr) = (15 scf/hr)*((500 ppm H2S)/(10^6 scf gas))*(98% converted to SO2)*(1 lb-mol/379 scf)*(34.065 lb H2S/lb-mol)*(64.06 lb SO2/34.065 lb H2S)

= 0.001 lb/hr SO_2

[b] An example calculation for annual CO emissions for EPN FL-1 follows:

CO (T/yr) = (Hourly Emissions, lb/hr)*(Annual Operating Hours, hr/yr)*(1 T/2,000 lb)

CO (T/yr) = (0.01 lb/hr)*(8,760 hr/yr)*(1 T/2,000 lb)

CO (T/yr) = 0.04 T/yr CO

[c] The process flares are smokeless per 40 CFR §60.18 requirements; therefore, PM emissions are negligible.

PROCESS FLARE WASTE GAS COMBUSTION EMISSIONS

DEWITT CENTRAL FACILITY 3 January 1st 2013 throught January 1st 2014

BURLINGTON RESOURCES OIL & GAS COMPANY LP

EPN	FIN	Description	LHV[a] (Btu/scf)	Waste Gas Flow Rate Hourly (MMBtu/hr)	Waste Gas Flow Rate Annual (MMBtu/yr)	Pollutant	Emission Factors	Units	Potential to Emit Hourly[b] (lb/hr)	Potential to Emit Annual[c] (T/yr)
FL-1	FL-1	Process Flare	2,088	2.49	1,134.17	CO	0.2755	lb/MMBtu	0.69	0.16
		Condensate Tanks and Loading				NO_X	0.1380	lb/MMBtu	0.34	0.08
						$PM/PM_{10}/PM_{2.5}$	-- [e]	--	--	--
						SO_2	-- [c]	--	0.004	0.02
						H_2S	--	--	0.00004	0.0002
FL-1	FL-1	Process Flare	2,061	0.10	703.27	CO	0.2755	lb/MMBtu	0.03	0.10
		Produced Water Tank and Loading				NO_X	0.1380	lb/MMBtu	0.01	0.05
						$PM/PM_{10}/PM_{2.5}$	-- [e]	--	--	--
						SO_2	-- [c]	--	0.004	0.02
						H_2S	--	--	0.00004	0.0002
FL-1	FL-1	Process Flare	1,436	2.69	23,564.40	CO	0.2755	lb/MMBtu	0.74	3.25
		Dehy Unit Waste Gas				NO_X	0.1380	lb/MMBtu	0.37	1.63
						$PM/PM_{10}/PM_{2.5}$	-- [e]	--	--	--
						SO_2	-- [c]	--	0.001	0.01
						H_2S	--	--	0.00002	0.0001

[a] Waste gas stream lower heating value was taken from WinSim calculated stream value.

[b] Emission Factors for CO and NO_X are based upon the Draft TNRCC Guidance Document for Flares and Vapor Oxidizers (dated 10/00) for other high-Btu flares. An example calculation for hourly CO emissions for EPN Fl-1 follows:

CO (lb/hr) = (Hourly Waste Gas Flow Rate, MMBtu/hr)*(Emission Factor, lb/MMBtu)

CO (lb/hr) = (2.49 MMBtu/hr)*(0.2755 lb/MMBtu)

= 0.69 lb/hr CO

[c] H_2S emissions are routed from the tanks to the flare and from the seperator to the flare and then converted to SO_2. SO_2 emission rates were determined based on the combustion efficiency of 98% H_2S converted to SO_2. H_2S emitted at the flare is 2% of the stream not converted by combustion. An example calculation for hourly SO_2 emissions for EPN FL-1 follows:

SO_2 (lb/hr) = (Source H_2S Emission Rate, lb/hr) * (98% captured H2S stream) * (98% conversion to SO_2 at combustion) * (1 mol H_2S/34.07 lb H_2S) * (64.06 lb SO2/1 mol SO_2)

SO_2 (lb/hr) = (0.00 lb/hr H2S at Condensate Tanks)* (98%) * (98%) * (1 mol H2S/34.07 lb H2S) * (64.06 lb SO2/1 mol SO2)

= 0.004 lb/hr SO_2

[d] An example calculation for annual CO emissions for EPN FL-1 follows:

CO (T/yr) = (Annual Waste Gas Flow Rate, MMBtu/yr) * (Emission Factor, lb/MMBtu) * (1 T / 2,000 lb)

CO (T/yr) = (1,134.17 MMBtu/yr) * (0.2755 lb/MMBtu) * (1 T / 2,000 lb)

= 0.16 T/yr CO

[e] The process flares are smokeless per 40 CFR §60.18 requirements; therefore, PM emissions are negligible.

CALCULATION OF FLARE FEED RATES FROM FINs TK-01 THROUGH TK-03, and TRUCK1

DEWITT CENTRAL FACILITY 3 January 1st 2013 throught January 1st 2014

BURLINGTON RESOURCES OIL & GAS COMPANY LP

TK-01 through TK-03 and TRUCK1 Total Emissions:[a]

VOC Emissions (lb/hr):	84.72
VOC Emissions (TPY):	19.40
Hydrocarbon Emissions (lb/hr):	118.13
Hydrocarbon Emissions (TPY):	27.05

Constituent	Heating Value[b] (Btu/lb)	Condensate Tanks Flash Gas Weight (%)	TK-01 through TK-03 and TRUCK1 Emissions [c] Hourly (lb/hr)	TK-01 through TK-03 and TRUCK1 Emissions [c] Annual (T/yr)	Flare Feed Rate [d] Hourly (MMBtu/hr)	Flare Feed Rate [d] Annual (MMBtu/yr)
Methane	23,861	11.82%	13.96	3.20	0.33	149.66
Ethane	22,304	14.97%	17.68	4.05	0.39	177.05
Propane	21,646	20.07%	23.71	5.43	0.50	230.37
I-Butane	21,242	7.76%	9.17	2.10	0.19	87.43
N-Butane	21,293	14.66%	17.32	3.97	0.36	165.69
I-Pentane	21,025	8.47%	10.01	2.29	0.21	94.37
N-Pentane	21,072	8.35%	9.86	2.26	0.20	93.34
Cyclopentane	20,350	0.00%	0.00	0.00	0.00	0.00
n-Hexane	20,928	7.23%	8.54	1.96	0.18	80.40
Cyclohexane	20,195	0.51%	0.60	0.14	0.01	5.54
Other Hexanes	20,928	0.00%	0.00	0.00	0.00	0.00
Heptanes	20,825	3.15%	3.72	0.85	0.08	34.69
Octanes	20,747	0.60%	0.71	0.16	0.01	6.51
Nonanes	20,687	0.08%	0.09	0.02	0.002	0.81
Decanes Plus	20,638	0.03%	0.04	0.01	0.001	0.40
Benzene	18,172	0.26%	0.31	0.07	0.01	2.49
Toluene	18,422	0.40%	0.47	0.11	0.01	3.97
Ethylbenzene	18,658	0.03%	0.04	0.01	0.001	0.37
Xylene	18,438	0.12%	0.14	0.03	0.003	1.08
	VOC	71.72%				
				Total:	**2.49**	**1,134.17**

[a] Total VOC Emissions were determined by adding the Uncontrolled Streams for FIN TK-01 through TK-03 on the Tank Summary table with the uncontrolled emissions from the Condensate Truck Loading. Total Hydrocarbon Emissions were calculated as follows:

Total HC (lb/hr) = VOC Emissions (lb/hr) * (1/ VOC% of stream)

Total HC (lb/hr) = (84.72 lb/hr) * (1 / 71.72%)

Total HC (lb/hr) = 118.13 lb/hr

[b] Heating values taken from Perry's Chemical Engineers' Handbook , Table 3-207 (pg. 3-155)

[c] Emission Rates were proportioned from the Total Hydrocarbon Emissions using the Condensate Flash Gas stream constituents weight percents, generated by the WinSim program.

[d] An example calculation for the hourly flare feed rate for Methane is demonstrated.

MMBtu/hr Methane = Methane Heating Value (Btu/lb) * Hourly Methane Emissions (lb/hr) * 98% of stream is combusted / 10^6

MMBtu/hr Methane = (23,861 Btu/lb) * (13.96 lb/hr) * 98% / (10^6)

MMBtu/hr Methane = 0.33 MMBtu/hr

An example calculation for the annual flare feed rate for Methane is demonstrated.

MMBtu/yr Methane = Methane Heating Value (Btu/lb) * Annual Methane Emissions (T/yr) * (2,000 lb/T) * 98% of stream is combusted / 10^6

MMBtu/yr Methane = (23,861 Btu/lb) * (3.20 T/yr) * (2,000 lb/T) * 98% / (10^6)

MMBtu/yr Methane = 149.66 MMBtu/yr

CALCULATION OF FLARE FEED RATES FROM FIN TK-04 and TRUCK2

DEWITT CENTRAL FACILITY 3 January 1st 2013 throught January 1st 2014

BURLINGTON RESOURCES OIL & GAS COMPANY LP

TK-04 and TRUCK2 Total Emissions:[a]

VOC Emissions (lb/hr):	3.34
VOC Emissions (TPY):	12.11
Hydrocarbon Emissions (lb/hr):	4.65
Hydrocarbon Emissions (TPY):	16.86

Constituent	Heating Value[b] (Btu/lb)	Produced Water Tanks Flash Gas Weight (%)	TK-04 and TRUCK2 Emissions [c] Hourly (lb/hr)	TK-04 and TRUCK2 Emissions [c] Annual (T/yr)	Flare Feed Rate [d] Hourly (MMBtu/hr)	Flare Feed Rate [d] Annual (MMBtu/yr)
Methane	23,861	11.49%	0.53	1.94	0.01	90.73
Ethane	22,304	14.66%	0.68	2.47	0.01	107.98
Propane	21,646	19.85%	0.92	3.35	0.02	142.13
I-Butane	21,242	7.80%	0.36	1.32	0.01	54.96
N-Butane	21,293	14.75%	0.69	2.49	0.01	103.92
I-Pentane	21,025	8.53%	0.40	1.44	0.01	59.34
N-Pentane	21,072	8.40%	0.39	1.42	0.01	58.65
Cyclopentane	20,350	0.00%	0.00	0.00	0.00	0.00
n-Hexane	20,928	7.29%	0.34	1.23	0.01	50.45
Cyclohexane	20,195	0.51%	0.02	0.09	0.0004	3.56
Other Hexanes	20,928	0.00%	0.00	0.00	0.00	0.00
Heptanes	20,825	3.17%	0.15	0.53	0.003	21.63
Octanes	20,747	0.60%	0.03	0.10	0.001	4.07
Nonanes	20,687	0.08%	0.004	0.01	0.0001	0.41
Decanes Plus	20,638	0.03%	0.001	0.01	0.00002	0.40
Benzene	18,172	0.26%	0.01	0.04	0.0002	1.42
Toluene	18,422	0.40%	0.02	0.07	0.0004	2.53
Ethylbenzene	18,658	0.03%	0.001	0.01	0.00002	0.37
Xylene	18,438	0.12%	0.01	0.02	0.0002	0.72
	VOC	71.82%				
				Total:	**0.10**	**703.27**

[a] Total VOC Emissions were determined by adding the Uncontrolled Streams for FIN TK-04 on the Tank Summary table and the uncontrolled emissions associated with the produced water loading, FIN TRUCK2. Total Hydrocarbon Emissions were calculated as follows:

Total HC (lb/hr) = VOC Emissions (lb/hr) * (1/ VOC% of stream)

Total HC (lb/hr) = (03.34 lb/hr) * (1/ 71.82%)

Total HC (lb/hr) = 4.65 lb/hr

[b] Heating values taken from Perry's Chemical Engineers' Handbook , Table 3-207 (pg. 3-155)

[c] Emission Rates were proportioned from the Total Hydrocarbon Emissions using the Produced Water Flash Gas stream constituents weight percents, generated by the WinSim program.

[d] An example calculation for the hourly flare feed rate for Methane is demonstrated.

MMBtu/hr Methane = Methane Heating Value (Btu/lb) * Hourly Methane Emissions (lb/hr) * 98% of stream is combusted / 10^6

MMBtu/hr Methane = (23,861 Btu/lb) * (0.53 lb/hr) * 98% / (10^6)

MMBtu/hr Methane = 0.01 MMBtu/hr

An example calculation for the annual flare feed rate for Methane is demonstrated.

MMBtu/yr Methane = Methane Heating Value (Btu/lb) * Annual Methane Emissions (T/yr) * (2,000 lb/T) * 98% of stream is combusted / 10^6

MMBtu/yr Methane = (23,861 Btu/lb) * (1.94 T/yr) * (2,000 lb/T) * 98% / (10^6)

MMBtu/yr Methane = 90.73 MMBtu/yr

CALCULATION OF STORAGE TANK WORKING AND BREATHING POTENTIAL TO EMIT DURING FLARE DOWNTIME -SMS

DEWITT CENTRAL FACILITY 3 January 1st 2013 throught January 1st 2014

BURLINGTON RESOURCES OIL & GAS COMPANY LP

Variable	Description	Units	Value
L_T	total loss = Ls + Lw	Ton/yr	See Table
L_S	standing loss = 365 Vv Wv Ke Ks	lb/yr	See Table
L_W	working loss = 0.001 Mv Pv Q Kn Kp	lb/yr	See Table
L_H	working loss = 0.001 Mv Pmax Qh	lb/hr	See Table
	Roof Construction		Cone
RVP	Condensate Reid Vapor Pressure	psia	13.77
ΔPb	Breather vent pressure range	psi	0.06
I	Solar insolation factor	Btu/ft2-day	1521
P_A	Atmospheric Pressure	psia	14.7
Mv	Vapor Molecular Weight	lb/lb-mol	40
T	Annual Average Temperature	°F	72.1
T_{AX}	Daily Maximum Ambient Temperature	°R	541.6
T_{AN}	Daily Minimum Ambient Temperature	°R	522.5
ΔT_A	Daily average ambient temperature range	°R	19.1
Kp	Product factor		1

		Tank Specifications							Material Specifications													VOC		Benzene	
		V/H	D	H/L	Capacity	Color		α	Mv	P_{MAX}	$Q^{\angle}$	ΔTv	Hvo	T_{LA}	P_{VA}	Wv	ΔPv	Ke	Ks	L_S	L_T	L_H	L_T	L_H
Material	No. of Tanks	Tank Type	Tank Diameter (ft)	Tank Height/ Length (ft)	Tank Capacity (bbl)	Paint Color	Paint Conditions	Paint Solar Absorbance Factor	Vapor Molecular Weight	Reid Vapor Pressure (psia)	Max. Hourly Storage (bbl/hr)	Daily Vapor Temp. Range °F	Vapor Space Outage (ft)	Daily Average Liquid Surface Temp °R	Average Vapor Pressure (psia)	Vapor Density (lb/ft3)	Daily Vapor Pressure Range	Vapor Space Expan. Factor	Vented Vapor Sat. Factor	Standing Loss per tank (lb/yr)	Total Loss (lb/hr)	Total Loss (T/yr)	Total Loss (lb/hr)	Total Loss (T/yr)
Condensate	2	V	12	25	500	Gray	Good	0.54	40	13.77	500	36.75	12.63	539.8	15.456	0.10673	3.96891	-5.1024	0.09	0.00	**0.00**	**0.00**	**0.00**	**0.00**
Slop	1	V	12	25	500	Gray	Good	0.54	40	13.77	500	36.75	12.63	539.8	15.456	0.10673	3.96891	-5.1024	0.09	0.00	**0.00**	**0.00**	**0.00**	**0.00**
PW	1	V	12	25	500	Gray	Good	0.54	40	0.138	500	36.75	12.63	539.8	0.042	0.00029	0.02561	0.0662	0.97	0.19	**0.001**	**0.0001**	**0.00001**	**0.000001**

NOTE: Tank working and breathing emissions are based on the equations found in EPA AP 42 Chapter 7. All factors used are represented in the table on this page. The Condensate Reid Vapor Pressure and Vapor Molecular Weight are determined based on the WinSim condensate stream and Off Gas stream. All other variables are found in AP 42 Chapter 7 or are default unit values.

The emissions shown are due to flare maintenance occuring 2% of the year. During the flare downtime the wellhead would be shut in. Therefore, there would be no condensate or produced water liquids flowing to the tanks; however, any liquid already in the tanks would remain and have breathing (standing losses) emissions. These emissions would not be controlled, as the flare is down for maintenance. The calculations shown demonstrate this alternative operating scenario regarding flare maintenance and downtime. Based on 2% downtime, this scenario is being shown to occur for 175.2 hours in a year.

As shown on the summary page representing the Tank Emission sent to Flare, H_2S emissions are represented as occuring when the liquid streams flash during the change from a pressurized flow to the atmospheric tank. Due to the chemical properties of H_2S the most conservative approach is to represent that all H_2S in the liquid will immediately flash, and there will be no H_2S emitted during working and breathing while the liquids are stored. Since there will be no liquid flow during the flare downtime, there are no flash emissions and therefore no H_2S emissions from the standing loss of the tanks.

MSS CALCULATION OF COMPRESSOR ENGINE STARTER VENT POTENTIAL TO EMIT

DEWITT CENTRAL FACILITY 3 January 1st 2013 throught January 1st 2014

BURLINGTON RESOURCES OIL & GAS COMPANY LP

Description	Facility Identification Number COMP-01-SV
Number of Engine Starts per Year	32
Number of Engine Starts per Hour	1
Start Volume per Event, scf	900
Fuel Stream Specific Gravity	0.8781
Fuel Stream Density, lb/scf [a]	0.0671
VOC Percentage in Fuel Stream, wt%	40%
Max Benzene Percentage in Gas Stream, wt%	0.26%
Max H_2S Percentage in Fuel Stream, wt%	0.10%
VOC Hourly Emission Rates (lb/hr): [b]	24.16
VOC Annual Emission Rates (T/yr): [c]	0.39
Benzene Hourly Emission Rates (lb/hr):[b]	0.16
Benzene Annual Emission Rates (T/yr): [c]	0.003
H_2S Hourly Emission Rates (lb/hr): [b]	0.06
H_2S Annual Emission Rates (T/yr): [c]	0.001

[a] Gas stream density is calculated as follows:

(28.96 lb/mole) / (379 scf/mole) * (0.8781) = 0.067 lb/scf

[b] Hourly starter vent VOC, benzene and H2S emissions are calculated based upon a conservative estimate of the portion of each consituent in the volume known to blow down from the engine source. An example calculation for VOC for COMP-01-SV is as follows:

VOC lb/hr = (1 startup/hr) * (900 scf/startup) * (0.067 lb/scf) * (40.00%) = 24.16 lb/hr

[c] Annual starter VOC emission rates are calculated as follows:

VOC lb/hr = (32 startups/yr) * (900 scf/startup) * (0.067 lb/scf) * (40.00%) / (2,000 lb/T) = 0.39 T/yr

SMSS - CALCULATION OF COMPRESSOR ENGINE BLOWDOWN POTENTIAL TO EMIT

DEWITT CENTRAL FACILITY 3 January 1st 2013 throught January 1st 2014

BURLINGTON RESOURCES OIL & GAS COMPANY LP

Description	Facility Identification Number COMP-01-BD
Number of Blowdowns per Year	32
Number of Blowdowns per Hour	1
Blowdown Volume per Event, scf	1,061
Gas Stream Specific Gravity	0.8781
Gas Stream Density, lb/scf [a]	0.0671
Max VOC Percentage in Gas Stream, wt%	40%
Max Benzene Percentage in Gas Stream, wt%	0.26%
Max H_2S Percentage in Gas Stream, wt%	0.10%
VOC Hourly Emission Rates (lb/hr): [b]	28.48
VOC Annual Emission Rates (T/yr): [c]	0.46
Benzene Hourly Emission Rates (lb/hr):[b]	0.19
Benzene Annual Emission Rates (T/yr): [c]	0.003
H_2S Hourly Emission Rates (lb/hr): [b]	0.07
H_2S Annual Emission Rates (T/yr): [c]	0.001
Controlled VOC Hourly Emission Rates (lb/hr)[d]	0.57
Controlled VOC Annual Emission Rates (T/yr):[e]	0.01
Controlled Benzene Hourly Emission Rates (lb/hr):[d]	0.004
Controlled Benzene Annual Emission Rates (T/yr): [e]	0.0001
Controlled H_2S Hourly Emission Rates (lb/hr)[d]	0.001
Controlled H_2S Annual Emission Rates (T/yr):[e]	0.00002

[a] Gas stream density is calculated as follows:

(28.96 lb/mole) / (379 scf/mole) * (0.8781) = 0.067 lb/scf

[b] Hourly blowdown VOC, Benzene and H_2S emissions rates are calculated. An example calculation for VOC for COMP-01-BD is as follows:
VOC lb/hr = (1 blowdown/hr) * (1,061 scf/blowdown) * (0.067 lb/scf) * (40.00% VOC in Stream) * (100-98% controlled at flare) = 28.48 lb/hr

[c] Annual blowdown VOC, Benzene and H_2S emission rates are calculated as follows:

VOC lb/hr = (32 blowdowns/yr) * (1,061 scf/blowdown) * (0.067 lb/scf) * (40.00%) / (2,000 lb/T) * (100% - 98% controlled

[d] Hourly controlled blowdown VOC, Benzene and H_2S emissions are calculated based upon a conservative estimate of the portion of each consituent in the volume known to blowdown from the engine source. An example calculation for VOC for

VOC lb/hr = (1 blowdown/hr) * (1,061 scf/blowdown) * (0.067 lb/scf) * (40.00% VOC in Stream) * (100-98% controlled at

[e] Annual controlled blowdown VOC emission rates are calculated as follows:

VOC lb/hr = (32 blowdowns/yr) * (1,061 scf/blowdown) * (0.067 lb/scf) * (40.00%) / (2,000 lb/T) * (100% - 98% controlled

SMSS - PROCESS FLARE WASTE GAS COMBUSTION EMISSIONS

DEWITT CENTRAL FACILITY 3 January 1st 2013 throught January 1st 2014

BURLINGTON RESOURCES OIL & GAS COMPANY LP

EPN	FIN	Description	LHV[a] (Btu/scf)	Waste Gas Flow Rate Hourly (MMBtu/hr)	Waste Gas Flow Rate Annual (MMBtu/yr)	Pollutant	Emission Factors	Units	Potential to Emit Hourly[b] (lb/hr)	Potential to Emit Annual[c] (T/yr)
FL-1-SMSS	COMP-01-BD	Process Flare	1,448	1.52	49.57	CO	0.2755	lb/MMBtu	0.42	0.01
		Compressor Blowdown Event				NO_X	0.1380	lb/MMBtu	0.21	0.003
						$PM/PM_{10}/PM_{2.5}$	-- [e]	--	--	--
						SO_2	-- [c]	--	0.13	0.002
						H_2S	-- [c]	--	0.001	0.00002

[a] Waste gas stream lower heating value was taken from the inlet gas analysis.

[b] Emission Factors for CO and NO_X are based upon the Draft TNRCC Guidance Document for Flares and Vapor Oxidizers (dated 10/00) for other high-Btu flares. An example calculation for hourly CO emissions for EPN Fl-1-SMSS follows:

CO (lb/hr) = (Hourly Waste Gas Flow Rate, MMBtu/hr)*(Emission Factor, lb/MMBtu)

CO (lb/hr) = (1.52 MMBtu/hr)*(0.2755 lb/MMBtu)

= 0.42 lb/hr CO

[c] H_2S emissions are routed from the separator to the flare and then converted to SO_2. SO_2 emission rates were determined based on the combustion efficiency of 98% H_2S converted to SO_2. H_2S emitted at the flare is 2% of the captured stream not converted by combustion. An example calculation for hourly SO_2 emissions for EPN FL-1-SMSS follows:

SO_2 (lb/hr) = (Source H_2S Emission Rate, lb/hr) * (98% captured H2S stream) * (98% conversion to SO_2 at combustion) * (1 mol H_2S/34.07 lb H_2S) * (64.06 lb SO2/1 mol SO_2)

SO_2 (lb/hr) = (0.07 lb/hr H2S from Blowdown)* (98%) * (98%) * (1 mol H2S/34.07 lb H2S) * (64.06 lb SO2/1 mol SO2)

= 0.13 lb/hr SO_2

[d] An example calculation for annual CO emissions for EPN FL-1-SMSS follows:

CO (T/yr) = (Annual Waste Gas Flow Rate, MMBtu/yr) * (Emission Factor, lb/MMBtu) * (1 T / 2,000 lb)

CO (T/yr) = (49.57 MMBtu/yr) * (0.2755 lb/MMBtu) * (1 T / 2,000 lb)

= 0.01 T/yr CO

[e] The process flares are smokeless per 40 CFR §60.18 requirements; therefore, PM emissions are negligible.

SMSS - CALCULATION OF FLARE FEED RATES FROM BLOWDOWN EVENTS

DEWITT CENTRAL FACILITY 3 January 1st 2013 throught January 1st 2014

BURLINGTON RESOURCES OIL & GAS COMPANY LP

Max Engine BD Volume (Mscf/hr)	1.06
Max Engine BD Volume (Mscf/yr)	34
Gas Density (lb/scf)	0.0671

Constituent	Heating Value[a] (Btu/lb)	Inlet Gas Weight (%)	Engine BD Emissions[b] Hourly (lb/hr)	Engine BD Emissions[b] Annual (T/yr)	Flare Feed Rate[c] Hourly (MMBtu/hr)	Flare Feed Rate[c] Annual (MMBtu/yr)
Methane	23,861	43.31%	30.80	0.49	0.72	22.92
Ethane	22,304	16.27%	11.57	0.19	0.25	8.31
Propane	21,646	12.06%	8.58	0.14	0.18	5.94
I-Butane	21,242	3.93%	2.80	0.04	0.06	1.67
N-Butane	21,293	6.68%	4.75	0.08	0.10	3.34
I-Pentane	21,025	3.70%	2.63	0.04	0.05	1.65
N-Pentane	21,072	3.27%	2.33	0.04	0.05	1.65
Cyclopentane	20,350	0.00%	0.00	0.00	0.00	0.00
n-Hexane	20,928	1.67%	1.19	0.02	0.02	0.82
Cyclohexane	20,195	0.60%	0.43	0.01	0.01	0.40
Other Hexanes	20,928	3.38%	2.40	0.04	0.05	1.64
Heptanes	20,825	1.38%	0.98	0.02	0.02	0.82
Octanes	20,747	0.22%	0.16	0.003	0.003	0.12
Nonanes	20,687	0.08%	0.06	0.001	0.001	0.04
Decanes Plus	20,638	0.00%	0.00	0.00	0.00	0.00
Benzene	18,172	0.18%	0.13	0.002	0.002	0.07
Toluene	18,422	0.34%	0.24	0.004	0.004	0.14
Ethylbenzene	18,658	0.01%	0.01	0.0001	0.0002	0.004
Xylene	18,438	0.08%	0.06	0.001	0.001	0.04
				Totals:	**1.52**	**49.57**

[a] Heating values taken from Perry's Chemical Engineers' Handbook , Table 3-207 (pg. 3-155)

[b] Constituent Emission Rates were calculated from the known maximum blowdown volumes and density then proportioned using the Inlet Gas stream constituents weight percents. An example calculation for Methane emissions is as follows:

Methane (lb/hr) = Maximum BD Volume (Mscf/hr) * Gas Density (lb/scf) * Inlet Gas Weight % * 1000
Methane (lb/hr) = (1.06 Mscf/hr) * (0.0671 lb/scf) * 43.31% * 1,000
Methane (lb/hr) = 30.80 lb/hr

[c] An example calculation for the hourly flare feed rate for Methane is demonstrated.

MMBtu/hr Methane = Methane Heating Value (Btu/lb) * Hourly Methane Emissions (lb/hr) * 98% of stream is combusted / 10^6
MMBtu/hr Methane = (23,861 Btu/lb) * (0,030.80 lb/hr) * 98% / (10^6)
MMBtu/hr Methane = 0.72 MMBtu/hr

An example calculation for the annual flare feed rate for Methane is demonstrated.

MMBtu/yr Methane = Methane Heating Value (Btu/lb) * Annual Methane Emissions (T/yr) * (2,000 lb/T) * 98% of stream is combusted / 10^6
MMBtu/yr Methane = (23,861 Btu/lb) * (0.49 T/yr) * (2,000 lb/T) * 98% / (10^6)
MMBtu/yr Methane = 22.92 MMBtu/yr

TABLE 3-1
SUMMARY OF ACTUAL AIR EMISSION RATES

DEWITT CENTRAL FACILITY 3 January 1st 2014 through May 1st 2014

BURLINGTON RESOURCES OIL & GAS COMPANY LP

			Proposed Allowable Hourly and Annual Emission Rates															
			VOC		NO_X		CO		$PM/PM_{10}/PM_{2.5}$		SO_2		H_2S		CH_2O		Benzene	
EPN	**FIN**	**Description**	**(lb/hr)**	**(T/yr)**	**(lb/hr)**	**(T/yr)**	**(lb/hr)**	**(T/yr)**	**(lb/hr)**	**(T/yr)**	**(lb/hr)**	**(T/yr)**	**(lb/hr)**	**(T/yr)**	**(lb/hr)**	**(T/yr)**	**(lb/hr)**	**(T/yr)**
Normal Operations																		
COMP-01	COMP-01	Compressor Engine 1	0.41	0.54	5.91	7.72	0.38	0.50	0.10	0.13	0.01	0.01	--	--	0.52	0.68	0.003	0.004
FUG	FUG	Site Fugitives	0.78	1.12	--	--	--	--	--	--	--	--	0.001	0.001	--	--	0.01	0.02
REB-1	REB-1	Glycol Reboiler No. 1	0.003	0.004	0.05	0.07	0.04	0.06	0.004	0.01	0.001	0.001	--	--	0.00004	0.0001	0.000001	0.000001
REB-1	DEHY-SV	Glycol Dehy Still Vent	0.10	0.14	--	--	--	--	--	--	--	--	0.001	0.001	--	--	0.004	0.01
FL-1	TK-01 TK-02	Controlled Condensate Tank Emissions	0.35	0.21	--	--	--	--	--	--	--	--	0.0001	0.0002	--	--	0.003	0.001
FL-1	TK-03	Controlled Slop Tank Emissions	0.22	0.04	--	--	--	--	--	--	--	--	--	--	--	--	0.002	0.0004
FL-1	TK-04	Controlled PW Tank Emissions	0.06	0.08	--	--	--	--	--	--	--	--	0.00004	0.0001	--	--	0.0002	0.0002
FL-1	TRUCK1	Controlled Condensate Truck Loading	1.97	0.05	--	--	--	--	--	--	--	--	--	--	--	--	0.02	0.0005
FL-1	TRUCK2	Controlled Produced Water Truck Loading	0.02	0.001	--	--	--	--	--	--	--	--	--	--	--	--	0.0001	0.00001
FL-1	FL-1	Flare Combustion (normal operations waste gas, assist, and pilot)	0.01	0.01	0.95	0.93	1.93	1.85	--	--	0.12	0.17	0.0002	0.0003	--	--	0.000003	0.000004
TK-AF	TK-AF	Antifreeze Liquid Storage	0.50	0.01	--	--	--	--	--	--	--	--	--	--	--	--	--	--
TK-LO	TK-LO	Lube Oil Liquid Storage	0.0002	0.000002	--	--	--	--	--	--	--	--	--	--	--	--	--	--
TK-SCAV	TK-SCAV	H_2S Scavenger Liquid Storage	<0.01	<0.01	--	--	--	--	--	--	--	--	--	--	--	--	--	--
Scheduled Maintenance, Startup and Shutdown Events																		
COMP-01-SV	COMP-01-SV	Compressor Engine 1 Starter Vent	24.16	0.23	--	--	--	--	--	--	--	--	0.06	0.001	--	--	0.16	0.001
FL-1-SMSS	COMP-01-BD	Compressor Engine 1 Blowdown	0.57	0.01	--	--	--	--	--	--	--	--	0.001	0.00002	--	--	0.004	0.00004
FL-1-SMSS	FL-1-SMSS	Flare Combustion (Blowdowns waste gas)	--	--	0.21	0.002	0.42	0.004	--	--	0.13	0.002	0.001	0.00002	--	--	--	--
TK-01 TK-02	TK-01 TK-02	Uncontrolled Condensate Tank Standing Loss Emissions (during flare downtime)	0.00	0.00	--	--	--	--	--	--	--	--	--	--	--	--	0.00	0.00
TK-03	TK-03	Uncontrolled Slop Tank Standing Loss Emissions (during flare downtime)	0.00	0.00	--	--	--	--	--	--	--	--	--	--	--	--	0.00	0.00
TK-04	TK-04	Uncontrolled PW Tank Standing Loss Emissions (during flare downtime)	0.003	0.0001	--	--	--	--	--	--	--	--	--	--	--	--	0.00002	0.000001
		Site-Wide Emissions:	**29.16**	**2.45**	**7.12**	**8.72**	**2.77**	**2.41**	**0.10**	**0.14**	**0.26**	**0.18**	**0.06**	**0.004**	**0.52**	**0.68**	**0.21**	**0.04**

CALCULATION OF COMPRESSOR ENGINE POTENTIAL TO EMIT

DEWITT CENTRAL FACILITY 3 January 1st 2014 through May 1st 2014

BURLINGTON RESOURCES OIL & GAS COMPANY LP

EPN	FIN	Description	Engine Ratings: Type	Engine Ratings: Rated Horsepower (hp)	Engine Ratings: Fuel Consumption (Btu/hp-hr)	Annual Operating Hours (hr/yr)	Pollutant	Emission Factors [a]	Units	Potential to Emit (PTE): Hourly [a] (lb/hr)	Potential to Emit (PTE): Annual [b] (T/yr)
COMP-01	COMP-01	Compressor Engine 1	Caterpillar G3516TALE	1,340	7,405	2,612	CO	0.13	g/hp-hr	0.38	0.50
			Lean Burn				NO_X	2.00	g/hp-hr	5.91	7.72
			Catalyst				$PM/PM_{10}/PM_{2.5}$	0.0099871	lb/MMBtu	0.10	0.13
			AFR Controller				SO_2	10	ppm S	0.01	0.01
							VOC	0.14	g/hp-hr	0.41	0.54
							CH_2O	0.0528	lb/MMBtu	0.52	0.68
							Benzene[c]	0.001	g/hp-hr	0.003	0.004

[a] The Emission Factors for engines COMP-01 for CO, NO_X and VOC are based on vendor data and conservatively represented. The VOC emission factor includes the CH_2O emission factor from AP-42 because the vendor provided information does not include formaldehyde. An example calculation for hourly CO emissions for EPN COMP-01 follows:

CO (lb/hr) = (Rated Horsepower, hp)*(Emission Factor, g/hp-hr)*(1 lb/453.59 g)

CO (lb/hr) = (1340 hp)*(0.13 g/hp-hr)*(1 lb/453.59 g)

= 0.38 lb/hr CO

The PM/PM_{10} and CH_20 Emission Factors for EPN COMP-01 and COMP-02 are from AP-42 Chapter 3. An example calculation for hourly PM emissions for EPN COMP-01 follows:

PM (lb/hr) = (Fuel Consumption, Btu/hp-hr)*(Rated Horsepower, hp)*(1 MMBtu/10^6 Btu)*(Emission Factor, lb/MMBtu)

PM (lb/hr) = (7,405 Btu/hp-hr)*(1,340 hp)*(1 MMBtu/10^6 Btu)*(0.009987 lb/MMBtu)

= 0.10 lb/hr PM

A material balance approach was used to estimate the SO_2 emission rates using the maximum sulfur concentration in the natural gas. H_2S Scavenger liquids are used to bring the fuel gas H_2S concentration below 10 ppm S. An example calculation for hourly SO_2 emissions for EPN COMP-01 follows:

SO_2 (lb/hr) = (Fuel Consumption, Btu/hp-hr)*(Rated Horsepower, hp)/(Lower Fuel Heating Value, Btu/scf)*(Sulfur Content, ppmv)*(1 lb-mol/379 scf)*(32.06 lb S/lb-mol)*(64.06 lb SO_2/32.06 lb S)

SO_2 (lb/hr) = (7,418 Btu/hp-hr)*(276 hp)/(1,235 Btu/scf)*(10 scf S/10^6 scf gas)*(1 lb-mol/379 scf)*(32.06 lb S/lb-mol)*(64.06 lb SO2/32.06 lb S)

= 0.01 lb/hr SO_2

[b] An example calculation for annual CO emissions for EPN COMP-01 follows:

CO (T/yr) = (Hourly PTE, lb/hr)*(Annual Operating Hours, hr/yr)*(1 T/2,000 lb)

CO (T/yr) = (0.38 lb/hr)*(2,612 hr/yr)*(1 T/2,000 lb)

= 0.50 T/yr CO

[c] An example calculation for benzene emission factor (EF) for EPN COMP-01 follows:

Benzene EF (g/hp-hr) = (VOC emission factor, g/hp-hr)*(Benzene AP-42 Emission Factor, lb/MMBtu) / (VOC AP-42 Emission Factor, lb/MMBtu)

Benzene EF (g/hp-hr) = (0.14) * (0.00044 lb/MMBtu) / (0.118 lb/MMBtu)

= 0.001 g/hp-hr

CALCULATION OF SITE FUGITIVES (FIN FUG) POTENTIAL TO EMIT

DEWITT CENTRAL FACILITY 3 January 1st 2014 through May 1st 2014

BURLINGTON RESOURCES OIL & GAS COMPANY LP

Component	Number of Components	Emission Factors [a] (lb/hr-component)	Annual Operating Hours (hr/yr)	Maximum VOC[a] (wt%)	Maximum Benzene[a] (wt%)	Maximum H_2S (wt%)	Reduction Credit [a] (%)	PTE VOC Hourly [b] (lb/hr)	PTE VOC Annual [c] (T/yr)	PTE Benzene Hourly [b] (lb/hr)	PTE Benzene Annual [c] (T/yr)	PTE H_2S Hourly [b] (lb/hr)	PTE H_2S Annual [c] (T/yr)
Valves													
Gas Streams	75	0.00992	2,880	40%	0.65%	0.10%	0%	0.30	0.43	0.005	0.01	0.001	0.001
Light Oil	54	0.0055	2,880	100%	0.98%	--	0%	0.30	0.43	0.003	0.004	--	--
Water/Light Oil	55	0.000216	2,880	--	0.50%	--	0%	0.01	0.02	0.0001	0.0001	--	--
Pumps seals													
Water/Light Oil	3	0.000052	2,880	--	0.50%	--	0%	0.0002	0.0002	0.000001	0.000001	--	--
Compressors seals													
Gas Streams	4	0.0194	2,880	40%	0.65%	0.10%	0%	0.03	0.04	0.001	0.001	0.0001	0.0001
Flanges													
Gas Streams	88	0.00086	2,880	40%	0.65%	0.10%	0%	0.03	0.04	0.0005	0.001	0.0001	0.0001
Light Oil	29	0.000243	2,880	100%	0.98%	--	0%	0.01	0.01	0.0001	0.0001	--	--
Water/Light Oil	10	0.000006	2,880	--	0.50%	--	0%	0.0001	0.0001	0.0000003	0.0000004	--	--
Connectors													
Gas Streams	123	0.00044	2,880	40%	0.65%	0.10%	0%	0.02	0.03	0.0004	0.001	0.0001	0.0001
Light Oil	113	0.000463	2,880	100%	0.98%	--	0%	0.05	0.08	0.001	0.001	--	--
Water/Light Oil	124	0.000243	2,880	--	0.50%	--	0%	0.03	0.04	0.0002	0.0002	--	--
							TOTAL:	**0.78**	**1.12**	**0.01**	**0.02**	**0.001**	**0.001**

[a] Fugitive Emission Factors and Reduction Credits are per TCEQ Technical Guidance Document for Equipment Leak Fugitives, dated October 2000. The emission factors are for total hydrocarbon, except for the emission factors associated with Water/Light Oil. As indicated on page 6 of 55 in the mentioned Guidance document, these factors are based off of a known stream constituency of 50%-99% water, and remainder VOC. Therefore, applying a VOC wt % would be double counting for the reduction due to water.

[b] Hourly VOC emission rates are calculated as follows:

(75 components) * (0.00992 lb/hr-component) * (40% VOC) * (100% - 0% reduction credit) = 0.30 lb/hr

[c] Annual VOC emission rates are calculated as follows:

(75 components) * (0.00992 lb/hr-component) * (2,880 hr/yr) * (40% VOC) * (100% - 0% reduction credit) / (2,000 lb/T) = 0.43 T/yr

CALCULATION OF HEATERS POTENTIAL TO EMIT

DEWITT CENTRAL FACILITY 3 January 1st 2014 through May 1st 2014

BURLINGTON RESOURCES OIL & GAS COMPANY LP

EPN	FIN	Description	Rated Duty (MMBtu/hr)	Operating Annual (hr/yr)	Pollutant	Emission Factor [a]	Unit	Potential To Emit[b] Hourly (lb/hr)	Potential To Emit[b] Annual (T/yr)
REB-1	REB-1	Glycol Reboiler No. 1	0.50	2,880	CO	84	lb/MMscf	0.04	0.06
					NO_X	100	lb/MMscf	0.05	0.07
					$PM/PM_{10}/PM_{2.5}$ [d]	7.6	lb/MMscf	0.004	0.01
					SO_2 [c]	10.0	ppm H2S	0.001	0.001
					VOC	5.5	lb/MMscf	0.003	0.004
					Benzene	0.0021	lb/MMscf	0.000001	0.000001
					CH_2O	0.075	lb/MMscf	0.00004	0.0001

[a] Unless otherwise noted, emission factors are from AP-42 Tables 1.4-1, 1.4-2, and 1.4-3 (dated 7/98) and are based on a fuel HHV of 1020 Btu/scf.

[b] Example calculations for EPN REB-1 follows:

CO (lb/hr) = (Rated Duty, MMBtu/hr)/(Higher Heating Value, Btu/scf)*(Emission Factor, lb/MMscf)

CO (lb/hr) = (0.50 MMBtu/hr)*) / (1020 Btu/scf) * (84 lb/MMscf)

= 0.04 lb/hr CO

CO (T/yr) = (Hourly Emissions, lb/hr)*(Annual Operating Hours, hr/yr)/(2,000 lb/T)

CO (T/yr) = (0.04 lb/hr)*(2,880 hr/yr)/(2,000 lb/T)

= 0.06 T/yr CO

[c] A material balance approach was used to estimate the SO_2 emission rates using the maximum sulfur concentration in the natural gas. H_2S Scavenger liquids are used to bring the fuel gas H_2S concentration below 10 ppm S.

SO_2 (lb/hr) = (Rated Duty, MMBtu/hr)/(Fuel Heating Value, Btu/scf)*(Sulfure, scf H2S/MMscf gas)*(1 lb-mol/379 scf)*(64.06 lb SO_2/lb-mol S)

SO_2 (lb/hr) = (0.50 MMBtu/hr)/(1448 Btu/scf)*(10.0 scf S/MMscf gas)*(1 lb-mol/379 scf)*(34.065 lb H2S/lb-mol)*(64.06 lb SO2/34.065 lb H2S)

= 0.001 lb/hr SO_2

[d] All PM is assumed to be less than 2.5 microns in diameter per footnote "c" of AP-42 Table 1.4-2.

GLYCOL DEHYDRATOR STILL VENT POTENTIAL TO EMIT

DEWITT CENTRAL FACILITY 3 January 1st 2014 through May 1st 2014

BURLINGTON RESOURCES OIL & GAS COMPANY LP

	Potential to Emit FIN DEHY-SV/EPN REB-1	
Component	**Hourly (lb/hr)**	**Annual (T/yr)**
Hydrogen Sulfide	0.0008	0.0010
Methane	0.0748	0.1077
Ethane	0.0312	0.0450
Propane	0.0248	0.0358
Isobutane	0.0084	0.0119
n-Butane	0.0151	0.0217
Isopentane	0.0079	0.0113
n-Pentane	0.0074	0.0106
n-Hexane	0.0041	0.0058
Cyclohexane	0.0029	0.0041
Other Hexanes	0.0076	0.0109
Heptanes	0.0038	0.0054
Benzene	0.0037	0.0053
Toluene	0.0066	0.0096
Ethylbenzene	0.0002	0.0003
Xylenes	0.0014	0.0019
C8+ Heavies	0.0014	0.0020
Total VOC	**0.0953**	**0.1366**

Note: The emissions from the pressurized flash tank and the condenser vent are routed to the reboiler, which will be running continuously with a 98% combustion efficiency. In the event that the reboiler can not handle the total volume of recycled gas to it, the remainder will be re-directed to flare with a 98% combustion efficiency. Accounting for both the max heater combustion and the max waste gas flare combustions is a built in conservative assumption such that both would not be running at max at the same time.

NOTE: GlyCalc program was run with 8760 runtime, hourly totals adjusted for partial year timeframe.

GRI-GLYCalc VERSION 4.0 - SUMMARY OF INPUT VALUES

Case Name: DEWITT CENTRAL FACILITY
File Name: T:\ConocoPhillips - 507\507-104 EPA 114 Response\04 DeWitt CF 3\DeWitt CF 3 Dehy.ddf
Date: August 05, 2014

DESCRIPTION:

Description: Burlington Resources Dehy Unit

Annual Hours of Operation: 2880.0 hours/yr

WET GAS:

Temperature: 100.00 deg. F
Pressure: 1000.00 psig
Wet Gas Water Content: Saturated

Component	Conc. (vol %)
Carbon Dioxide	1.5470
Hydrogen Sulfide	0.0500
Nitrogen	0.0660
Methane	68.4160
Ethane	13.7110
Propane	6.9330
Isobutane	1.7130
n-Butane	2.9130
Isopentane	1.3010
n-Pentane	1.1500
n-Hexane	0.4920
Cyclohexane	0.1770
Other Hexanes	0.9950
Heptanes	0.3500
Benzene	0.0570
Toluene	0.0940
Ethylbenzene	0.0020
Xylenes	0.0190
C8+ Heavies	0.0640

DRY GAS:

Flow Rate: 8.1 MMSCF/day
Water Content: 7.0 lbs. H2O/MMSCF

LEAN GLYCOL:

Glycol Type: TEG
Water Content: 1.0 wt% H2O
Recirculation Ratio: 0.8 gal/lb H2O

PUMP:

Glycol Pump Type: Gas Injection
Gas Injection Pump Volume Ratio: 0.080 acfm gas/gpm glycol

FLASH TANK:

Flash Control: Combustion device
Flash Control Efficiency: 98.00 %
Temperature: 180.0 deg. F
Pressure: 35.0 psig

REGENERATOR OVERHEADS CONTROL DEVICE:

Control Device: Condenser
Temperature: 120.0 deg. F
Pressure: 14.0 psia

Control Device: Combustion Device
Destruction Efficiency: 98.0 %
Excess Oxygen: 0.0 %
Ambient Air Temperature: 80.0 deg. F

GRI-GLYCalc VERSION 4.0 - AGGREGATE CALCULATIONS REPORT

Case Name: DEWITT CENTRAL FACILITY
File Name: T:\ConocoPhillips - 507\507-104 EPA 114 Response\04 DeWitt CF 3\DeWitt CF 3 Dehy.
Date: August 05, 2014

DESCRIPTION:

Description: Burlington Resources Dehy Unit

Annual Hours of Operation: 2880.0 hours/yr

EMISSIONS REPORTS:

CONTROLLED REGENERATOR EMISSIONS

Component	lbs/hr	lbs/day	tons/yr
Hydrogen Sulfide	0.0001	0.002	0.0001
Methane	0.0002	0.006	0.0003
Ethane	0.0002	0.006	0.0004
Propane	0.0004	0.011	0.0006
Isobutane	0.0002	0.004	0.0002
n-Butane	0.0003	0.008	0.0005
Isopentane	0.0001	0.002	0.0001
n-Pentane	0.0001	0.002	0.0001
n-Hexane	<0.0001	0.001	0.0001
Cyclohexane	0.0001	0.002	0.0001
Other Hexanes	0.0001	0.002	0.0001
Heptanes	<0.0001	<0.001	<0.0001
Benzene	0.0004	0.010	0.0006
Toluene	0.0004	0.010	0.0006
Ethylbenzene	<0.0001	<0.001	<0.0001
Xylenes	<0.0001	0.001	0.0001
C8+ Heavies	<0.0001	<0.001	<0.0001
Total Emissions	0.0028	0.066	0.0040
Total Hydrocarbon Emissions	0.0027	0.065	0.0039
Total VOC Emissions	0.0022	0.053	0.0032
Total HAP Emissions	0.0009	0.022	0.0013
Total BTEX Emissions	0.0009	0.021	0.0013

UNCONTROLLED REGENERATOR EMISSIONS

Component	lbs/hr	lbs/day	tons/yr
Hydrogen Sulfide	0.0048	0.115	0.0069
Methane	0.0122	0.293	0.0176
Ethane	0.0129	0.310	0.0186
Propane	0.0266	0.638	0.0383
Isobutane	0.0112	0.268	0.0161
n-Butane	0.0252	0.605	0.0363
Isopentane	0.0132	0.316	0.0189
n-Pentane	0.0144	0.346	0.0208
n-Hexane	0.0117	0.281	0.0169
Cyclohexane	0.0242	0.581	0.0349
Other Hexanes	0.0171	0.410	0.0246
Heptanes	0.0176	0.423	0.0254
Benzene	0.2295	5.507	0.3304
Toluene	0.5620	13.488	0.8093
Ethylbenzene	0.0165	0.397	0.0238
Xylenes	0.2481	5.954	0.3572
C8+ Heavies	0.0037	0.088	0.0053
Total Emissions	1.2508	30.020	1.8012
Total Hydrocarbon Emissions	1.2460	29.905	1.7943
Total VOC Emissions	1.2209	29.303	1.7582
Total HAP Emissions	1.0678	25.627	1.5376
Total BTEX Emissions	1.0561	25.346	1.5208

FLASH GAS EMISSIONS

Component	lbs/hr	lbs/day	tons/yr
Hydrogen Sulfide	0.0007	0.016	0.0009
Methane	0.0746	1.790	0.1074
Ethane	0.0310	0.743	0.0446
Propane	0.0244	0.586	0.0352
Isobutane	0.0082	0.196	0.0117
n-Butane	0.0148	0.354	0.0212
Isopentane	0.0078	0.187	0.0112
n-Pentane	0.0073	0.175	0.0105
n-Hexane	0.0040	0.095	0.0057
Cyclohexane	0.0028	0.067	0.0040
Other Hexanes	0.0075	0.180	0.0108
Heptanes	0.0037	0.088	0.0053
Benzene	0.0033	0.078	0.0047
Toluene	0.0062	0.150	0.0090
Ethylbenzene	0.0001	0.003	0.0002
Xylenes	0.0013	0.030	0.0018
C8+ Heavies	0.0013	0.032	0.0019
Total Emissions	0.1988	4.771	0.2863
Total Hydrocarbon Emissions	0.1981	4.755	0.2853
Total VOC Emissions	0.0926	2.222	0.1333
Total HAP Emissions	0.0148	0.356	0.0214
Total BTEX Emissions	0.0109	0.261	0.0157

FLASH TANK OFF GAS

Component	lbs/hr	lbs/day	tons/yr
Hydrogen Sulfide	0.0325	0.781	0.0469
Methane	3.7284	89.480	5.3688
Ethane	1.5486	37.166	2.2300
Propane	1.2214	29.314	1.7589
Isobutane	0.4078	9.786	0.5872
n-Butane	0.7378	17.706	1.0624
Isopentane	0.3896	9.351	0.5610
n-Pentane	0.3639	8.734	0.5240
n-Hexane	0.1980	4.751	0.2851
Cyclohexane	0.1406	3.373	0.2024
Other Hexanes	0.3760	9.024	0.5415
Heptanes	0.1838	4.410	0.2646
Benzene	0.1627	3.904	0.2342
Toluene	0.3121	7.491	0.4495
Ethylbenzene	0.0063	0.150	0.0090
Xylenes	0.0629	1.509	0.0905
C8+ Heavies	0.0674	1.617	0.0970
Total Emissions	9.9396	238.550	14.3130
Total Hydrocarbon Emissions	9.9070	237.769	14.2661
Total VOC Emissions	4.6301	111.122	6.6673
Total HAP Emissions	0.7419	17.805	1.0683
Total BTEX Emissions	0.5439	13.053	0.7832

EQUIPMENT REPORTS:

CONDENSER AND COMBUSTION DEVICE

Condenser Outlet Temperature: 120.00 deg. F
Condenser Pressure: 14.00 psia
Condenser Duty: 5.37e-004 MM BTU/hr
Hydrocarbon Recovery: 0.09 bbls/day
Produced Water: 1.17 bbls/day
Ambient Temperature: 80.00 deg. F
Excess Oxygen: 0.00 %

Combustion Efficiency: 98.00 %
Supplemental Fuel Requirement: 5.37e-004 MM BTU/hr

Component	Emitted	Destroyed
Hydrogen Sulfide	1.42%	98.58%
Methane	1.98%	98.02%
Ethane	1.91%	98.09%
Propane	1.65%	98.35%
Isobutane	1.40%	98.60%
n-Butane	1.25%	98.75%
Isopentane	0.78%	99.22%
n-Pentane	0.66%	99.34%
n-Hexane	0.35%	99.65%
Cyclohexane	0.26%	99.74%
Other Hexanes	0.48%	99.52%
Heptanes	0.14%	99.86%
Benzene	0.19%	99.81%
Toluene	0.07%	99.93%
Ethylbenzene	0.02%	99.98%
Xylenes	0.02%	99.98%
C8+ Heavies	0.00%	100.00%

ABSORBER

Calculated Absorber Stages: 1.74
Specified Dry Gas Dew Point: 7.00 lbs. H2O/MMSCF
Temperature: 100.0 deg. F
Pressure: 1000.0 psig
Dry Gas Flow Rate: 8.1000 MMSCF/day
Glycol Losses with Dry Gas: 0.6332 lb/hr
Wet Gas Water Content: Saturated
Calculated Wet Gas Water Content: 58.29 lbs. H2O/MMSCF
Specified Lean Glycol Recirc. Ratio: 0.81 gal/lb H2O

Component	Remaining in Dry Gas	Absorbed in Glycol
Water	12.00%	88.00%
Carbon Dioxide	99.96%	0.04%
Hydrogen Sulfide	99.79%	0.21%
Nitrogen	100.00%	0.00%
Methane	100.00%	0.00%
Ethane	99.99%	0.01%
Propane	99.99%	0.01%
Isobutane	99.99%	0.01%
n-Butane	99.98%	0.02%
Isopentane	99.99%	0.01%
n-Pentane	99.98%	0.02%
n-Hexane	99.98%	0.02%
Cyclohexane	99.91%	0.09%
Other Hexanes	99.98%	0.02%
Heptanes	99.97%	0.03%
Benzene	99.04%	0.96%
Toluene	98.90%	1.10%
Ethylbenzene	98.83%	1.17%
Xylenes	98.30%	1.70%
C8+ Heavies	99.96%	0.04%

FLASH TANK

Flash Control: Combustion device
Flash Control Efficiency: 98.00 %
Flash Temperature: 180.0 deg. F
Flash Pressure: 35.0 psig

Component	Left in Glycol	Removed in Flash Gas
Water	98.18%	1.82%
Carbon Dioxide	2.94%	97.06%
Hydrogen Sulfide	12.85%	87.15%
Nitrogen	0.30%	99.70%

Methane	0.33%	99.67%
Ethane	0.83%	99.17%
Propane	2.13%	97.87%
Isobutane	2.67%	97.33%
n-Butane	3.30%	96.70%
Isopentane	3.40%	96.60%
n-Pentane	3.96%	96.04%
n-Hexane	5.76%	94.24%
Cyclohexane	16.68%	83.32%
Other Hexanes	4.65%	95.35%
Heptanes	8.96%	91.04%
Benzene	60.52%	39.48%
Toluene	67.03%	32.97%
Ethylbenzene	75.35%	24.65%
Xylenes	82.34%	17.66%
C8+ Heavies	11.45%	88.55%

REGENERATOR

No Stripping Gas used in regenerator.

Component	Remaining in Glycol	Distilled Overhead
Water	7.18%	92.82%
Carbon Dioxide	0.00%	100.00%
Hydrogen Sulfide	0.00%	100.00%
Nitrogen	0.00%	100.00%
Methane	0.00%	100.00%
Ethane	0.00%	100.00%
Propane	0.00%	100.00%
Isobutane	0.00%	100.00%
n-Butane	0.00%	100.00%
Isopentane	4.02%	95.98%
n-Pentane	3.99%	96.01%
n-Hexane	3.21%	96.79%
Cyclohexane	13.90%	86.10%
Other Hexanes	6.90%	93.10%
Heptanes	2.55%	97.45%
Benzene	7.98%	92.02%
Toluene	11.45%	88.55%
Ethylbenzene	13.44%	86.56%
Xylenes	15.37%	84.63%
C8+ Heavies	57.90%	42.10%

STREAM REPORTS:

WET GAS STREAM

Temperature: 100.00 deg. F
Pressure: 1014.70 psia
Flow Rate: 3.38e+005 scfh

Component	Conc. (vol%)	Loading (lb/hr)
Water	1.23e-001	1.97e+001
Carbon Dioxide	1.54e+000	6.05e+002
Hydrogen Sulfide	4.99e-002	1.52e+001
Nitrogen	6.59e-002	1.64e+001
Methane	6.83e+001	9.76e+003
Ethane	1.37e+001	3.67e+003
Propane	6.92e+000	2.72e+003
Isobutane	1.71e+000	8.85e+002
n-Butane	2.91e+000	1.51e+003
Isopentane	1.30e+000	8.35e+002
n-Pentane	1.15e+000	7.38e+002
n-Hexane	4.91e-001	3.77e+002

Cyclohexane	1.77e-001	1.32e+002
Other Hexanes	9.93e-001	7.62e+002
Heptanes	3.49e-001	3.12e+002
Benzene	5.69e-002	3.96e+001
Toluene	9.38e-002	7.70e+001
Ethylbenzene	2.00e-003	1.89e+000
Xylenes	1.90e-002	1.79e+001
C8+ Heavies	6.39e-002	9.69e+001
Total Components	100.00	2.26e+004

DRY GAS STREAM

Temperature: 100.00 deg. F
Pressure: 1014.70 psia
Flow Rate: 3.38e+005 scfh

Component	Conc. (vol%)	Loading (lb/hr)
Water	1.47e-002	2.36e+000
Carbon Dioxide	1.55e+000	6.05e+002
Hydrogen Sulfide	4.99e-002	1.51e+001
Nitrogen	6.60e-002	1.64e+001
Methane	6.84e+001	9.76e+003
Ethane	1.37e+001	3.67e+003
Propane	6.93e+000	2.72e+003
Isobutane	1.71e+000	8.85e+002
n-Butane	2.91e+000	1.51e+003
Isopentane	1.30e+000	8.34e+002
n-Pentane	1.15e+000	7.38e+002
n-Hexane	4.92e-001	3.77e+002
Cyclohexane	1.77e-001	1.32e+002
Other Hexanes	9.94e-001	7.62e+002
Heptanes	3.50e-001	3.12e+002
Benzene	5.64e-002	3.92e+001
Toluene	9.29e-002	7.62e+001
Ethylbenzene	1.98e-003	1.87e+000
Xylenes	1.87e-002	1.76e+001
C8+ Heavies	6.39e-002	9.69e+001
Total Components	100.00	2.26e+004

LEAN GLYCOL STREAM

Temperature: 100.00 deg. F
Flow Rate: 2.33e-001 gpm

Component	Conc. (wt%)	Loading (lb/hr)
TEG	9.89e+001	1.30e+002
Water	1.00e+000	1.31e+000
Carbon Dioxide	1.86e-011	2.44e-011
Hydrogen Sulfide	2.44e-012	3.20e-012
Nitrogen	4.90e-014	6.44e-014
Methane	7.98e-018	1.05e-017
Ethane	9.82e-008	1.29e-007
Propane	9.07e-009	1.19e-008
Isobutane	2.46e-009	3.24e-009
n-Butane	4.42e-009	5.81e-009
Isopentane	4.19e-004	5.51e-004
n-Pentane	4.56e-004	5.99e-004
n-Hexane	2.96e-004	3.88e-004
Cyclohexane	2.98e-003	3.91e-003
Other Hexanes	9.63e-004	1.27e-003
Heptanes	3.51e-004	4.62e-004
Benzene	1.52e-002	1.99e-002
Toluene	5.53e-002	7.27e-002
Ethylbenzene	1.96e-003	2.57e-003
Xylenes	3.43e-002	4.51e-002
C8+ Heavies	3.84e-003	5.05e-003

Total Components 100.00 1.31e+002

RICH GLYCOL AND PUMP GAS STREAM

Temperature: 100.00 deg. F
Pressure: 1014.70 psia
Flow Rate: 2.93e-001 gpm
NOTE: Stream has more than one phase.

Component	Conc. (wt%)	Loading (lb/hr)
TEG	8.10e+001	1.30e+002
Water	1.17e+001	1.87e+001
Carbon Dioxide	2.85e-001	4.57e-001
Hydrogen Sulfide	2.33e-002	3.73e-002
Nitrogen	4.01e-003	6.41e-003
Methane	2.34e+000	3.74e+000
Ethane	9.75e-001	1.56e+000
Propane	7.79e-001	1.25e+000
Isobutane	2.62e-001	4.19e-001
n-Butane	4.77e-001	7.63e-001
Isopentane	2.52e-001	4.03e-001
n-Pentane	2.37e-001	3.79e-001
n-Hexane	1.31e-001	2.10e-001
Cyclohexane	1.05e-001	1.69e-001
Other Hexanes	2.46e-001	3.94e-001
Heptanes	1.26e-001	2.02e-001
Benzene	2.57e-001	4.12e-001
Toluene	5.91e-001	9.47e-001
Ethylbenzene	1.58e-002	2.54e-002
Xylenes	2.22e-001	3.56e-001
C8+ Heavies	4.75e-002	7.61e-002
Total Components	100.00	1.60e+002

FLASH TANK OFF GAS STREAM

Temperature: 180.00 deg. F
Pressure: 49.70 psia
Flow Rate: 1.47e+002 scfh

Component	Conc. (vol%)	Loading (lb/hr)
Water	4.85e+000	3.40e-001
Carbon Dioxide	2.59e+000	4.44e-001
Hydrogen Sulfide	2.46e-001	3.25e-002
Nitrogen	5.88e-002	6.40e-003
Methane	5.98e+001	3.73e+000
Ethane	1.33e+001	1.55e+000
Propane	7.13e+000	1.22e+000
Isobutane	1.81e+000	4.08e-001
n-Butane	3.27e+000	7.38e-001
Isopentane	1.39e+000	3.90e-001
n-Pentane	1.30e+000	3.64e-001
n-Hexane	5.91e-001	1.98e-001
Cyclohexane	4.30e-001	1.41e-001
Other Hexanes	1.12e+000	3.76e-001
Heptanes	4.72e-001	1.84e-001
Benzene	5.36e-001	1.63e-001
Toluene	8.72e-001	3.12e-001
Ethylbenzene	1.52e-002	6.25e-003
Xylenes	1.52e-001	6.29e-002
C8+ Heavies	1.02e-001	6.74e-002
Total Components	100.00	1.07e+001

FLASH TANK GLYCOL STREAM

Temperature: 180.00 deg. F
Flow Rate: 2.69e-001 gpm

Component	Conc. (wt%)	Loading (lb/hr)	(ppm)
TEG	8.68e+001	1.30e+002	867886.
Water	1.23e+001	1.83e+001	122629.
Carbon Dioxide	8.99e-003	1.34e-002	90.
Hydrogen Sulfide	3.21e-003	4.80e-003	32.
Nitrogen	1.27e-005	1.89e-005	0.
Methane	8.16e-003	1.22e-002	82.
Ethane	8.64e-003	1.29e-002	86.
Propane	1.78e-002	2.66e-002	178.
Isobutane	7.49e-003	1.12e-002	75.
n-Butane	1.69e-002	2.52e-002	169.
Isopentane	9.18e-003	1.37e-002	92.
n-Pentane	1.01e-002	1.50e-002	101.
n-Hexane	8.11e-003	1.21e-002	81.
Cyclohexane	1.88e-002	2.81e-002	188.
Other Hexanes	1.23e-002	1.83e-002	123.
Heptanes	1.21e-002	1.81e-002	121.
Benzene	1.67e-001	2.49e-001	1670.
Toluene	4.25e-001	6.35e-001	4249.
Ethylbenzene	1.28e-002	1.91e-002	128.
Xylenes	1.96e-001	2.93e-001	1962.
C8+ Heavies	5.83e-003	8.71e-003	58.
Total Components	100.00	1.49e+002	1000000.

FLASH GAS EMISSIONS

Flow Rate: 6.28e+002 scfh
Control Method: Combustion Device
Control Efficiency: 98.00

Component	Conc. (vol%)	Loading (lb/hr)
Water	5.99e+001	1.78e+001
Carbon Dioxide	3.96e+001	2.88e+001
Hydrogen Sulfide	1.15e-003	6.51e-004
Nitrogen	1.38e-002	6.40e-003
Methane	2.81e-001	7.46e-002
Ethane	6.23e-002	3.10e-002
Propane	3.35e-002	2.44e-002
Isobutane	8.48e-003	8.16e-003
n-Butane	1.54e-002	1.48e-002
Isopentane	6.53e-003	7.79e-003
n-Pentane	6.10e-003	7.28e-003
n-Hexane	2.78e-003	3.96e-003
Cyclohexane	2.02e-003	2.81e-003
Other Hexanes	5.28e-003	7.52e-003
Heptanes	2.22e-003	3.68e-003
Benzene	2.52e-003	3.25e-003
Toluene	4.10e-003	6.24e-003
Ethylbenzene	7.12e-005	1.25e-004
Xylenes	7.16e-004	1.26e-003
C8+ Heavies	4.78e-004	1.35e-003
Total Components	100.00	4.69e+001

REGENERATOR OVERHEADS STREAM

Temperature: 212.00 deg. F
Pressure: 14.70 psia
Flow Rate: 3.64e+002 scfh

Component	Conc. (vol%)	Loading (lb/hr)
Water	9.84e+001	1.70e+001
Carbon Dioxide	3.18e-002	1.34e-002
Hydrogen Sulfide	1.47e-002	4.80e-003
Nitrogen	7.05e-005	1.89e-005
Methane	7.92e-002	1.22e-002

Ethane	4.47e-002	1.29e-002
Propane	6.28e-002	2.66e-002
Isobutane	2.00e-002	1.12e-002
n-Butane	4.52e-002	2.52e-002
Isopentane	1.90e-002	1.32e-002
n-Pentane	2.08e-002	1.44e-002
n-Hexane	1.42e-002	1.17e-002
Cyclohexane	3.00e-002	2.42e-002
Other Hexanes	2.07e-002	1.71e-002
Heptanes	1.83e-002	1.76e-002
Benzene	3.06e-001	2.29e-001
Toluene	6.36e-001	5.62e-001
Ethylbenzene	1.62e-002	1.65e-002
Xylenes	2.43e-001	2.48e-001
C8+ Heavies	2.24e-003	3.67e-003
Total Components	100.00	1.83e+001

CONDENSER PRODUCED WATER STREAM

Temperature: 120.00 deg. F
Flow Rate: 3.40e-002 gpm

Component	Conc. (wt%)	Loading (lb/hr)	(ppm)
Water	9.99e+001	1.70e+001	998960.
Carbon Dioxide	6.24e-003	1.06e-003	62.
Hydrogen Sulfide	5.80e-003	9.86e-004	58.
Nitrogen	2.50e-007	4.25e-008	0.
Methane	3.14e-004	5.35e-005	3.
Ethane	3.66e-004	6.23e-005	4.
Propane	6.70e-004	1.14e-004	7.
Isobutane	1.31e-004	2.23e-005	1.
n-Butane	3.48e-004	5.92e-005	3.
Isopentane	8.05e-005	1.37e-005	1.
n-Pentane	7.99e-005	1.36e-005	1.
n-Hexane	2.88e-005	4.90e-006	0.
Cyclohexane	2.45e-004	4.17e-005	2.
Other Hexanes	4.60e-005	7.83e-006	0.
Heptanes	9.38e-006	1.60e-006	0.
Benzene	4.75e-002	8.09e-003	475.
Toluene	3.73e-002	6.34e-003	373.
Ethylbenzene	2.76e-004	4.69e-005	3.
Xylenes	4.55e-003	7.74e-004	45.
C8+ Heavies	3.12e-009	5.30e-010	0.
Total Components	100.00	1.70e+001	1000000.

CONDENSER RECOVERED OIL STREAM

Temperature: 120.00 deg. F
Flow Rate: 2.58e-003 gpm

Component	Conc. (wt%)	Loading (lb/hr)
Water	6.32e-002	6.93e-004
Carbon Dioxide	2.90e-002	3.18e-004
Hydrogen Sulfide	3.60e-002	3.95e-004
Nitrogen	3.82e-005	4.19e-007
Methane	7.23e-003	7.93e-005
Ethane	4.60e-002	5.04e-004
Propane	4.16e-001	4.57e-003
Isobutane	3.02e-001	3.31e-003
n-Butane	8.60e-001	9.43e-003
Isopentane	7.29e-001	7.99e-003
n-Pentane	8.78e-001	9.63e-003
n-Hexane	8.79e-001	9.64e-003
Cyclohexane	1.92e+000	2.11e-002
Other Hexanes	1.18e+000	1.30e-002
Heptanes	1.50e+000	1.64e-002

Benzene	1.82e+001	2.00e-001
Toluene	4.88e+001	5.35e-001
Ethylbenzene	1.49e+000	1.63e-002
Xylenes	2.23e+001	2.45e-001
C8+ Heavies	3.34e-001	3.67e-003
Total Components	100.00	1.10e+000

CONDENSER VENT STREAM

Temperature: 120.00 deg. F
Pressure: 14.00 psia
Flow Rate: 1.39e+000 scfh

Component	Conc. (vol%)	Loading (lb/hr)
Water	1.22e+001	8.04e-003
Carbon Dioxide	7.46e+000	1.20e-002
Hydrogen Sulfide	2.73e+000	3.42e-003
Nitrogen	1.80e-002	1.85e-005
Methane	2.05e+001	1.21e-002
Ethane	1.12e+001	1.23e-002
Propane	1.35e+001	2.19e-002
Isobutane	3.68e+000	7.85e-003
n-Butane	7.37e+000	1.57e-002
Isopentane	1.95e+000	5.15e-003
n-Pentane	1.80e+000	4.78e-003
n-Hexane	6.57e-001	2.08e-003
Cyclohexane	1.01e+000	3.13e-003
Other Hexanes	1.30e+000	4.11e-003
Heptanes	3.32e-001	1.22e-003
Benzene	7.53e+000	2.16e-002
Toluene	6.08e+000	2.06e-002
Ethylbenzene	5.18e-002	2.02e-004
Xylenes	6.16e-001	2.40e-003
C8+ Heavies	1.03e-004	6.41e-007
Total Components	100.00	1.59e-001

COMBUSTION DEVICE OFF GAS STREAM

Temperature: 1000.00 deg. F
Pressure: 14.70 psia
Flow Rate: 2.24e-002 scfh

Component	Conc. (vol%)	Loading (lb/hr)
Hydrogen Sulfide	3.40e+000	6.83e-005
Methane	2.55e+001	2.41e-004
Ethane	1.39e+001	2.47e-004
Propane	1.68e+001	4.38e-004
Isobutane	4.59e+000	1.57e-004
n-Butane	9.17e+000	3.14e-004
Isopentane	2.42e+000	1.03e-004
n-Pentane	2.25e+000	9.55e-005
n-Hexane	8.18e-001	4.15e-005
Cyclohexane	1.26e+000	6.25e-005
Other Hexanes	1.62e+000	8.22e-005
Heptanes	4.13e-001	2.44e-005
Benzene	9.37e+000	4.31e-004
Toluene	7.57e+000	4.11e-004
Ethylbenzene	6.45e-002	4.03e-006
Xylenes	7.67e-001	4.80e-005
C8+ Heavies	1.28e-004	1.28e-008
Total Components	100.00	2.77e-003

SUMMARY OF TANKS SENT TO FLARE POTENTIAL TO EMIT

DEWITT CENTRAL FACILITY 3 January 1st 2014 through May 1st 2014

BURLINGTON RESOURCES OIL & GAS COMPANY LP

			VOC Emissions								Benzene Emissions								H_2S Emissions[c]			
			Flash Emissions[a]		WB Emissions[b]		Uncontrolled Total		Controlled Total[d]		Flash Emissions[a]		WB Emissions[b]		Uncontrolled Total		Controlled Total[d]		Uncontrolled Total		Controlled Total[d]	
EPN	**FIN**	**Description**	**Hourly (lb/hr)**	**Annual (T/yr)**	**Hourly (lb/hr)**	**Annual (T/yr)**	**Hourly (lb/hr)**	**Annual (T/yr)**	**Hourly (lb/hr)**	**Annual (T/yr)**	**Hourly (lb/hr)**	**Annual (T/yr)**	**Hourly (lb/hr)**	**Annual (T/yr)**	**Hourly (lb/hr)**	**Annual (T/yr)**	**Hourly (lb/hr)**	**Annual (T/yr)**	**Hourly (lb/hr)**	**Annual (T/yr)**	**Hourly (lb/hr)**	**Annual (T/yr)**
FL-1	TK-01 TK-02	500 bbl Condensate Storage Tanks	6.36	9.16	11.02	1.19	17.38	10.35	0.35	0.21	0.02	0.03	0.11	0.01	0.13	0.04	0.003	0.001	0.004	0.01	0.0001	0.0002
FL-1	TK-03	500 bbl Slop Storage Tank	--	--	11.02	1.85	11.02	1.85	0.22	0.04	--	--	0.11	0.02	0.11	0.02	0.002	0.0004	--	--	--	--
FL-1	TK-04	500 bbl Produced Water Storage Tank	2.73	3.93	0.11	0.02	2.84	3.95	0.06	0.08	0.01	0.01	0.001	0.0001	0.01	0.01	0.0002	0.0002	0.002	0.003	0.00004	0.0001
TK-AF[e]	TK-AF[e]	Antifreeze Liquid Storage	--	--	0.50	0.01	0.50	0.01	--	--	--	--	--	--	--	--	--	--	--	--	--	--
TK-LO[f]	TK-LO[e]	Lube Oil Liquid Storage	--	--	0.0002	0.000002	0.0002	0.000002	--	--	--	--	--	--	--	--	--	--	--	--	--	--
TK-SCAV[f]	TK-SCAV[f]	H_2S Scavenger Liquid Storage	--	--	--	--	<0.01	<0.01	--	--	--	--	--	--	--	--	--	--	--	--	--	--

Notes:

[a] VOC and Benzene Flash Emissions are calculated using the WinSim stream simulation program. Data inputs included the pressurized stream data and throughputs represented in this submittal. See the pages at the end of this attachment for a printout of the data inputs and emissions reports.

[b] The Working/Breathing emissions for tanks TK-01 thourgh TK-04 are calculated using AP 42 Chapter 7 calculations with data inputs from the stream data and throughputs. See the following pages for the represented calculations.

[c] The Ideal Gas Law was used to estimate the H2S emission rates using the maximum sulfur concentration in the gas coming off the tanks (500 ppm). An example calculation for hourly H2S emissions from FIN TK-04 follows:

H_2S (lb/hr) = (% Vol H_2S in stream) * (Total Volumetric Flow of Gas, scf/hr) * (1 atm STP) * (34.0798 lb/lb-mol H2S) / (1.314, atm-scf/lb-mol-K) / (298 K)

H_2S (lb/hr) = (500 ppm /10^6) * (35.66 scf/hr) * (1 atm) * (34.0789 lb/lbmol H2S) / (1.314, atm-scf/lb-mol-K) / (298 K)

H_2S (lb/hr) = 0.002 lb/hr

[d] All VOC tank emissions are routed to the flare control device with a capture and control efficiency of 98%. H_2S emissions are captured at 98% and then 98% converted to SO_2 during combustion.

[e] Working and breathing emissions for the Antifreeze and Lube Oil tanks were determined using Tanks 4.09d simulation software. The size and number of TK-AF and TK-LO tanks may vary, but the total throughput of the liquid and the associated VOC emissions will not exceed the proposed emission rate. Printouts from the software can be found on the following pages. An example calculation of the hourly emissions for FIN TK-AF follows:

VOC(lb/hr)= [((Breathing Loss, lb/yr) / (8,760 hr/yr)) + ((Working Loss, lb/yr) / (Number of turnovers/yr) / (Turnovers per hour))] * No. of tanks

VOC(lb/hr)= ((8.909 lb/yr) / (8,760 hr/yr)) + ((5.9832 lb/yr) / (12 turnovers/yr) / (1 turnover per hour))

VOC(lb/hr)= 0.50 lb/hr

An example calculation of the annual emissions for FIN TK-AF follows:

VOC(T/yr)= ((Working Loss, lb/yr) + (Breathing Loss, lb/yr)) / (2,000 ton/yr)) * No. of Tanks

VOC(T/yr)= ((5.9832 lb/yr) + (8.909 lb/yr)) / (2,000 ton/yr)

VOC(T/yr)= 0.01 lb/hr

[f] The size and number of the H_2S Scavenger Liquid Storage Tanks may vary, but the total throughput of the liquid and the associated VOC emissions will not exceed the proposed negligible emission rate.

CALCULATION OF STORAGE TANK WORKING AND BREATHING POTENTIAL TO EMIT

DEWITT CENTRAL FACILITY 3 January 1st 2014 through May 1st 2014

BURLINGTON RESOURCES OIL & GAS COMPANY LP

Variable	Description	Units	Value
L_T	total loss = Ls + Lw	Ton/yr	See Table
L_S	standing loss = 365 Vv Wv Ke Ks	lb/yr	See Table
L_W	working loss = 0.001 Mv Pv Q Kn Kp	lb/yr	See Table
L_H	working loss = 0.001 Mv Pmax Qh	lb/hr	See Table
	Roof Construction		Cone
RVP	Condensate Reid Vapor Pressure	psia	13.77
ΔPb	Breather vent pressure range	psi	0.06
I	Solar insolation factor	Btu/ft2-day	1521
P_A	Atmospheric Pressure	psia	14.7
Mv	Vapor Molecular Weight	lb/lb-mol	40
T	Annual Average Temperature	°F	72.1
T_{AX}	Daily Maximum Ambient Temperature	°R	541.6
T_{AN}	Daily Minimum Ambient Temperature	°R	522.5
ΔT_A	Daily average ambient temperature range	°R	19.1
Kp	Product factor		1

		Tank Specifications							Material Specifications																	VOC		Benzene	
		V/H	D	H/L	Capacity	Color		α	Mv	P_{MAX}	Q^2		ΔTv	Hvo	Vv	T_{LA}	P_{VA}	Wv	ΔPv	Ke	Ks	Kn	L_S	L_W	L_T	L_H	L_T	L_H
Material	No. of Tanks	Tank Type	Tank Diameter (ft)	Tank Height/ Length (ft)	Tank Capacity (bbl)	Paint Color	Paint Conditions	Paint Solar Absorbance Factor	Vapor Molecular Weight	Reid Vapor Pressure (psia)	Max. Hourly Thruput (bbl/hr)	Annual thruput (bbl)	Daily Vapor Temp. Range °F	Vapor Space Outage (ft)	Vapor Space Volume (ft3)	Daily Average Liquid Surface Temp °R	Average Vapor Pressure (psia)	Vapor Density (lb/ft3)	Daily Vapor Pressure Range	Vapor Space Expan. Factor	Vented Vapor Sat. Factor	Turnover Factor	Standing Loss per tank (lb/yr)	Working Loss per tank (lb/yr)	Total Loss (lb/hr)	Total Loss (T/yr)	Total Loss (lb/hr)	Total Loss (T/yr)
Condensate	2	V	12	25	500	Gray	Good	0.54	40	13.77	20	3,840	36.75	12.63	1428.4	539.8	15.456	0.10673	3.96891	-5.1024	0.09	1.00	0.00	2,374.04	**11.02**	**1.19**	**0.11**	**0.012**
Slop	1	V	12	25	500	Gray	Good	0.54	40	13.77	20	6,000	36.75	12.63	1428.4	539.8	15.456	0.10673	3.96891	-5.1024	0.09	1.00	0.00	3,709.44	**11.02**	**1.85**	**0.11**	**0.02**
PW	1	V	12	25	500	Gray	Good	0.54	40	0.138	20	24,000	36.75	12.63	1428.4	539.8	0.042	0.00029	0.02561	0.0662	0.97	0.79	3.19	31.85	**0.11**	**0.02**	**0.001**	**0.0001**

NOTE: Tank working and breathing emissions are based on the equations found in EPA AP 42 Chapter 7. All factors used are represented in the table on this page. The Condensate Reid Vapor Pressure and Vapor Molecular Weight are determined based on the WinSim condensate stream and Off Gas stream. All other variables are found in AP 42 Chapter 7 or are default unit values.

CALCULATION OF TRUCK LOADING POTENTIAL TO EMIT

DEWITT CENTRAL FACILITY 3 January 1st 2014 through May 1st 2014

BURLINGTON RESOURCES OIL & GAS COMPANY LP

Sample Calculations for condensate and slop:

Loading Loss (lb/Mgal) = 12.46 * S * P * M / T (AP-42 Section 5.2)
Maximum Loading Loss = 12.46 * 0.60 * 13.770 * 40 / 560 = 7.353 lb/Mgal

Hourly Uncollected Emissions PTE = (Hourly Throughput, Mgal/hr) * (Maximum Loading Loss, lb/Mgal) * (1 - Capture Efficiency)
Hourly Uncollected Emissions PTE = (8.19 Mgal/hr) * (7.353 lb/Mgal) * (1 - 0.987) = 0.78 lb/hr

Hourly PTE = ((Hourly Throughput, Mgal/hr) * (Maximum Loading Loss, lb/Mgal) * (Capture Efficiency) * (1 - Control Efficiency)) + (Hourly Uncollected Loading Emissions, (lb/hr))
Hourly PTE = (8.19 Mgal/hr) * (7.353 lb/Mgal) * (0.987) * (1 - 0.98) + (0.78 lb/hr) = 1.97 lb/hr

Annual Emissions = ((Annual Throughput, Mgal/yr) * (Average Loading Loss, lb/Mgal) * (Capture Efficiency) * (1 - Control Efficiency)) + (Annual Uncollected Loading Emissions, lb/yr)) / (2000 lb/T)
Annual Emissions = (413.28 Mgal/yr) * (7.367 lb/Mgal) * (0.987) * (1 - 0.98) + (39.58 lb/yr) / (2000 lb/T) = 0.05 T/yr

															VOC		Benzene	
FIN	EPN	Facility Name	S	P @ 560 °R (psia)	P @531.7 °R (psia)	M	Maximum Loading Loss (lb/Mgal)	Average Loading Loss (lb/Mgal)	Hourly Throughput (Mgal/hr)	Annual Throughput (Mgals/yr)	Capture Efficiency	Hourly Uncollected Loading Emissions (lb/hr)	Annual Uncollected Loading Emissions (lb/yr))	Control Efficiency	Hourly PTE (lb/hr)	Annual PTE (T/yr)	Hourly PTE (lb/hr)	Annual PTE (T/yr)
TRUCK1	FL-1	Condensate and Slop Tank Truck Loading	0.60	13.77	13.099	40	7.353	7.367	8.19	413.28	0.987	0.78	39.58	0.98	1.97	0.05	0.02	0.0005
TRUCK2	FL-1	Produced Water Tank Truck Loading	0.60	0.14	0.029	40	0.075	0.079	8.19	1,008.00	0.987	0.01	1.04	0.98	0.02	0.001	0.0001	0.00001

Daily maximum and daily minimum ambient temperature from Tanks 4.09d for this area's annual averages (79.5and 57.725, for average of 68.62).

Annual Average Condensate Vapor Pressure at T_{LA} :

P = exp{ [(2799/(T+459.6) - 2.227]log10(RVP) - 7261/(T+459.6) + 12.82}
exp{ [(2799/(68.62+459.6) - 2.227]log10(13.77) - 7261/(68.62+459.6) + 12.82}
13.099 psia

Annual Average Produced Water Vapor Pressure at T_{LA} :

P = exp{ [(2799/(T+459.6) - 2.227]log10(RVP) - 7261/(T+459.6) + 12.82}
exp{ [(2799/(68.62+459.6) - 2.227]log10(13.77*.01) - 7261/(68.62+459.6) + 12.82}
0.029 psia

NOTE: Capture Efficiency of 98.7% represented based upon TCEQ Guidance regarding trucks that are utlizing NSPS XX Testing.

SUMMARY OF PROCESS FLARE FUEL GAS COMBUSTION AND
WASTE GAS COMBUSTION POTENTIAL TO EMIT- NORMAL OPERATIONS

DEWITT CENTRAL FACILITY 3 January 1st 2014 through May 1st 2014

BURLINGTON RESOURCES OIL & GAS COMPANY LP

			CO		NO_X		SO_2		H_2S		VOC		Benzene	
EPN	**FIN**	**Description**	**(lb/hr)**	**(T/yr)**	**(lb/hr)**	**(T/yr)**	**(lb/hr)**	**(T/yr)**	**(lb/hr)**	**(T/yr)**	**(lb/hr)**	**(T/yr)**	**(lb/hr)**	**(T/yr)**
FL-1	FL-1	Pilot Gas Combustion	0.01	0.01	0.003	0.004	0.001	0.001	0.0000004	0.000001	0.0001	0.0001	0.00000003	0.00000004
FL-1	FL-1	Flare Assist Gas Combustion	0.44	0.63	0.22	0.32	0.10	0.14	0.00003	0.00004	0.01	0.01	0.000003	0.000004
FL-1	FL-1	Waste Gas Combustion	1.48	1.21	0.73	0.61	0.02	0.03	0.0002	0.0003	--	--	--	--
		Totals:	**1.93**	**1.85**	**0.95**	**0.93**	**0.12**	**0.17**	**0.0002**	**0.0003**	**0.01**	**0.01**	**0.000003**	**0.000004**

NOTE: Pilot Gas Combustion and Flare Assist Gas Combustion calculations are shown on the following page. Waste Gas Combustion shown here is the combined sum of the waste gas from the Dehy waste stream, Condensate and Produced Water tanks, and loading operations shown on subsequent pages.

CALCULATION OF FLARE PILOT GAS and FLARE ASSIST GAS POTENTIAL TO EMIT

DEWITT CENTRAL FACILITY 3 January 1st 2014 through May 1st 2014

BURLINGTON RESOURCES OIL & GAS COMPANY LP

EPN	FIN	Description	LHV (Btu/scf)	Heat Release scf/hr	Operating Hours (hr/yr)	Pollutant	Emission Factors	Units	Emission Rates Hourly [a] (lb/hr)	Emission Rates Annual [b] (T/yr)
FL-1	FL-1	Flare 1- Process Pilot Gas Combustion	1,292	15	2,880	CO	0.2755	lb/MMBtu	0.01	0.01
						NO_X	0.138	lb/MMBtu	0.003	0.004
						$PM/PM_{10}/PM_{2.5}$	-- [c]	--	--	--
						SO_2	500	ppm H_2S	0.001	0.001
						H_2S	500	ppm H_2S	0.0000004	0.000001
						VOC	5.5	lb/MMscf	0.0001	0.0001
						Benzene	0.0021	lb/MMscf	0.00000003	0.00000004
FL-1	FL-1	Flare 1- Process Flare Assist Gas Combustion	1,292	1,250	2,880	CO	0.2755	lb/MMBtu	0.44	0.63
						NO_X	0.138	lb/MMBtu	0.22	0.32
						$PM/PM_{10}/PM_{2.5}$	-- [c]	--	--	--
						SO_2	500	ppm H_2S	0.10	0.14
						H_2S	500	ppm H_2S	0.00003	0.00004
						VOC	5.5	lb/MMscf	0.01	0.01
						Benzene	0.0021	lb/MMscf	0.000003	0.000004

[a] Emission Factors for CO and NO_X are based upon the Draft TNRCC Guidance Document for Flares and Vapor Oxidizers (dated 10/00) for other high-Btu flares. An example calculation for hourly CO emissions for EPN FL-1 follows:

CO (lb/hr) = (Heat Release, scf/hr) * (Lower Heating Value, Btu/scf) * ($MM/10^6$)*(Emission Factor, lb/MMBtu)

CO (lb/hr) = (15 scf/hr) * (1,292 Btu/scf) * (MM/10^6)*(0.2755 lb/MMBtu)

= 0.01 lb/hr CO

The Emission Factors for VOC and Benzene were based upon AP-42 Table 1.4-2 and 1.4-3 (dated 7/98). An example calculation for hourly VOC emissions for EPN FL-1 follows:

VOC (lb/hr) = (Heat Release, scf/hr) * ($MM/10^6$) * (Emission Factor, lb/MMscf)

VOC (lb/hr) = (15 scf/hr) * (MM/10^6) * (5.5 lb/MMscf)

= 0.0001 lb/hr VOC

A material balance approach was used to estimate the SO2 and H2S emission rates using the maximum sulfur concentration in the natural gas. As shown in Figure 6-1, H2S concentration at the site is conservatively represented at 500 ppm. When used as a pilot gas or flare assist gas, 98% of this concentration will be converted to SO2, and 2% will remain uncombusted and unconverted. An example calculation for hourly SO2 emissions for the pilot gas of EPN FL-01 follows:

SO_2 (lb/hr) = Heat Release (scf/hr)*(Sulfur Content, ppmv)*(98% conversion to SO_2)*(1 lb-mol/379 scf)*(34.065 lb H2S/lb-mol)*(64.06 lb SO_2/34.065 lb H2S)

SO_2 (lb/hr) = (15 scf/hr)*((500 ppm H2S)/(10^6 scf gas))*(98% converted to SO2)*(1 lb-mol/379 scf)*(34.065 lb H2S/lb-mol)*(64.06 lb SO2/34.065 lb H2S)

= 0.001 lb/hr SO_2

[b] An example calculation for annual CO emissions for EPN FL-1 follows:

CO (T/yr) = (Hourly Emissions, lb/hr)*(Annual Operating Hours, hr/yr)*(1 T/2,000 lb)

CO (T/yr) = (0.01 lb/hr)*(2,880 hr/yr)*(1 T/2,000 lb)

CO (T/yr) = 0.01 T/yr CO

[c] The process flares are smokeless per 40 CFR §60.18 requirements; therefore, PM emissions are negligible.

PROCESS FLARE WASTE GAS COMBUSTION EMISSIONS

DEWITT CENTRAL FACILITY 3 January 1st 2014 through May 1st 2014

BURLINGTON RESOURCES OIL & GAS COMPANY LP

EPN	FIN	Description	LHV[a] (Btu/scf)	Waste Gas Flow Rate Hourly (MMBtu/hr)	Waste Gas Flow Rate Annual (MMBtu/yr)	Pollutant	Emission Factors	Units	Potential to Emit Hourly[b] (lb/hr)	Potential to Emit Annual[c] (T/yr)
FL-1	FL-1	Process Flare	2,088	2.57	801.15	CO	0.2755	lb/MMBtu	0.71	0.11
		Condensate Tanks and Loading				NO_X	0.1380	lb/MMBtu	0.35	0.06
						$PM/PM_{10}/PM_{2.5}$	--[e]	--	--	--
						SO_2	--[c]	--	0.01	0.02
						H_2S	--	--	0.0001	0.0002
FL-1	FL-1	Process Flare	2,061	0.10	230.42	CO	0.2755	lb/MMBtu	0.03	0.03
		Produced Water Tank and Loading				NO_X	0.1380	lb/MMBtu	0.01	0.02
						$PM/PM_{10}/PM_{2.5}$	--[e]	--	--	--
						SO_2	--[c]	--	0.004	0.01
						H_2S	--	--	0.00004	0.0001
FL-1	FL-1	Process Flare	1,436	2.69	7,747.20	CO	0.2755	lb/MMBtu	0.74	1.07
		Dehy Unit Waste Gas				NO_X	0.1380	lb/MMBtu	0.37	0.53
						$PM/PM_{10}/PM_{2.5}$	--[e]	--	--	--
						SO_2	--[c]	--	0.001	0.002
						H_2S	--	--	0.00002	0.00002

[a] Waste gas stream lower heating value was taken from WinSim calculated stream value.

[b] Emission Factors for CO and NO_X are based upon the Draft TNRCC Guidance Document for Flares and Vapor Oxidizers (dated 10/00) for other high-Btu flares. An example calculation for hourly CO emissions for EPN Fl-1 follows:

CO (lb/hr) = (Hourly Waste Gas Flow Rate, MMBtu/hr)*(Emission Factor, lb/MMBtu)

CO (lb/hr) = (2.57 MMBtu/hr)*(0.2755 lb/MMBtu)

= 0.71 lb/hr CO

[c] H_2S emissions are routed from the tanks to the flare and from the seperator to the flare and then converted to SO_2. SO_2 emission rates were determined based on the combustion efficiency of 98% H_2S converted to SO_2. H_2S emitted at the flare is 2% of the stream not converted by combustion. An example calculation for hourly SO_2 emissions for EPN FL-1 follows:

SO_2 (lb/hr) = (Source H_2S Emission Rate, lb/hr) * (98% captured H2S stream) * (98% conversion to SO_2 at combustion) * (1 mol H_2S/34.07 lb H_2S) * (64.06 lb SO2/1 mol SO_2)

SO_2 (lb/hr) = (0.00 lb/hr H2S at Condensate Tanks)* (98%) * (98%) * (1 mol H2S/34.07 lb H2S) * (64.06 lb SO2/1 mol SO2)

= 0.01 lb/hr SO_2

[d] An example calculation for annual CO emissions for EPN FL-1 follows:

CO (T/yr) = (Annual Waste Gas Flow Rate, MMBtu/yr) * (Emission Factor, lb/MMBtu) * (1 T / 2,000 lb)

CO (T/yr) = (0,801.15 MMBtu/yr) * (0.2755 lb/MMBtu) * (1 T / 2,000 lb)

= 0.11 T/yr CO

[e] The process flares are smokeless per 40 CFR §60.18 requirements; therefore, PM emissions are negligible.

CALCULATION OF FLARE FEED RATES FROM FINs TK-01 THROUGH TK-03, and TRUCK1

DEWITT CENTRAL FACILITY 3 January 1st 2014 through May 1st 2014

BURLINGTON RESOURCES OIL & GAS COMPANY LP

TK-01 through TK-03 and TRUCK1 Total Emissions:[a]

VOC Emissions (lb/hr):	87.90
VOC Emissions (TPY):	13.71
Hydrocarbon Emissions (lb/hr):	122.56
Hydrocarbon Emissions (TPY):	19.12

Constituent	Heating Value[b] (Btu/lb)	Condensate Tanks Flash Gas Weight (%)	TK-01 through TK-03 and TRUCK1 Emissions [c] Hourly (lb/hr)	Annual (T/yr)	Flare Feed Rate [d] Hourly (MMBtu/hr)	Annual (MMBtu/yr)
Methane	23,861	11.82%	14.49	2.26	0.34	105.69
Ethane	22,304	14.97%	18.35	2.86	0.40	125.03
Propane	21,646	20.07%	24.60	3.84	0.52	162.92
I-Butane	21,242	7.76%	9.51	1.48	0.20	61.62
N-Butane	21,293	14.66%	17.97	2.80	0.37	116.86
I-Pentane	21,025	8.47%	10.38	1.62	0.21	66.76
N-Pentane	21,072	8.35%	10.23	1.60	0.21	66.08
Cyclopentane	20,350	0.00%	0.00	0.00	0.00	0.00
n-Hexane	20,928	7.23%	8.86	1.38	0.18	56.61
Cyclohexane	20,195	0.51%	0.63	0.10	0.01	3.96
Other Hexanes	20,928	0.00%	0.00	0.00	0.00	0.00
Heptanes	20,825	3.15%	3.86	0.60	0.08	24.49
Octanes	20,747	0.60%	0.74	0.11	0.02	4.47
Nonanes	20,687	0.08%	0.10	0.02	0.002	0.81
Decanes Plus	20,638	0.03%	0.04	0.006	0.001	0.24
Benzene	18,172	0.26%	0.32	0.05	0.01	1.78
Toluene	18,422	0.40%	0.49	0.08	0.01	2.89
Ethylbenzene	18,658	0.03%	0.04	0.006	0.001	0.22
Xylene	18,438	0.12%	0.15	0.02	0.003	0.72
	VOC	71.72%				
				Total:	**2.57**	**801.15**

[a] Total VOC Emissions were determined by adding the Uncontrolled Streams for FIN TK-01 through TK-03 on the Tank Summary table with the uncontrolled emissions from the Condensate Truck Loading. Total Hydrocarbon Emissions were calculated as follows:

Total HC (lb/hr) = VOC Emissions (lb/hr) * (1/ VOC% of stream)

Total HC (lb/hr) = (87.90 lb/hr) * (1 / 71.72%)

Total HC (lb/hr) = 122.56 lb/hr

[b] Heating values taken from Perry's Chemical Engineers' Handbook , Table 3-207 (pg. 3-155)

[c] Emission Rates were proportioned from the Total Hydrocarbon Emissions using the Condensate Flash Gas stream constituents weight percents, generated by the WinSim program.

[d] An example calculation for the hourly flare feed rate for Methane is demonstrated.

MMBtu/hr Methane = Methane Heating Value (Btu/lb) * Hourly Methane Emissions (lb/hr) * 98% of stream is combusted / 10^6

MMBtu/hr Methane = (23,861 Btu/lb) * (14.49 lb/hr) * 98% / (10^6)

MMBtu/hr Methane = 0.34 MMBtu/hr

An example calculation for the annual flare feed rate for Methane is demonstrated.

MMBtu/yr Methane = Methane Heating Value (Btu/lb) * Annual Methane Emissions (T/yr) * (2,000 lb/T) * 98% of stream is combusted / 10^6

MMBtu/yr Methane = (23,861 Btu/lb) * (2.26 T/yr) * (2,000 lb/T) * 98% / (10^6)

MMBtu/yr Methane = 105.69 MMBtu/yr

CALCULATION OF FLARE FEED RATES FROM FIN TK-04 and TRUCK2

DEWITT CENTRAL FACILITY 3 January 1st 2014 through May 1st 2014

BURLINGTON RESOURCES OIL & GAS COMPANY LP

TK-04 and TRUCK2 Total Emissions:[a]

VOC Emissions (lb/hr):	3.34
VOC Emissions (TPY):	3.97
Hydrocarbon Emissions (lb/hr):	4.65
Hydrocarbon Emissions (TPY):	5.53

Constituent	Heating Value[b] (Btu/lb)	Produced Water Tanks Flash Gas Weight (%)	TK-04 and TRUCK2 Emissions [c] Hourly (lb/hr)	TK-04 and TRUCK2 Emissions [c] Annual (T/yr)	Flare Feed Rate [d] Hourly (MMBtu/hr)	Flare Feed Rate [d] Annual (MMBtu/yr)
Methane	23,861	11.49%	0.53	0.64	0.01	29.93
Ethane	22,304	14.66%	0.68	0.81	0.01	35.41
Propane	21,646	19.85%	0.92	1.10	0.02	46.67
I-Butane	21,242	7.80%	0.36	0.43	0.01	17.90
N-Butane	21,293	14.75%	0.69	0.82	0.01	34.22
I-Pentane	21,025	8.53%	0.40	0.47	0.01	19.37
N-Pentane	21,072	8.40%	0.39	0.46	0.01	19.00
Cyclopentane	20,350	0.00%	0.00	0.00	0.00	0.00
n-Hexane	20,928	7.29%	0.34	0.40	0.01	16.41
Cyclohexane	20,195	0.51%	0.02	0.03	0.0004	1.19
Other Hexanes	20,928	0.00%	0.00	0.00	0.00	0.00
Heptanes	20,825	3.17%	0.15	0.18	0.003	7.35
Octanes	20,747	0.60%	0.03	0.03	0.001	1.22
Nonanes	20,687	0.08%	0.004	0.004	0.0001	0.16
Decanes Plus	20,638	0.03%	0.001	0.002	0.00002	0.08
Benzene	18,172	0.26%	0.01	0.01	0.0002	0.36
Toluene	18,422	0.40%	0.02	0.02	0.0004	0.72
Ethylbenzene	18,658	0.03%	0.001	0.002	0.00002	0.07
Xylene	18,438	0.12%	0.01	0.01	0.0002	0.36
	VOC	71.82%				
				Total:	**0.10**	**230.42**

[a] Total VOC Emissions were determined by adding the Uncontrolled Streams for FIN TK-04 on the Tank Summary table and the uncontrolled emissions associated with the produced water loading, FIN TRUCK2. Total Hydrocarbon Emissions were calculated as follows:

Total HC (lb/hr) = VOC Emissions (lb/hr) * (1/ VOC% of stream)

Total HC (lb/hr) = (03.34 lb/hr) * (1/ 71.82%)

Total HC (lb/hr) = 4.65 lb/hr

[b] Heating values taken from Perry's Chemical Engineers' Handbook , Table 3-207 (pg. 3-155)

[c] Emission Rates were proportioned from the Total Hydrocarbon Emissions using the Produced Water Flash Gas stream constituents weight percents, generated by the WinSim program.

[d] An example calculation for the hourly flare feed rate for Methane is demonstrated.

MMBtu/hr Methane = Methane Heating Value (Btu/lb) * Hourly Methane Emissions (lb/hr) * 98% of stream is combusted / 10^6

MMBtu/hr Methane = (23,861 Btu/lb) * (0.53 lb/hr) * 98% / (10^6)

MMBtu/hr Methane = 0.01 MMBtu/hr

An example calculation for the annual flare feed rate for Methane is demonstrated.

MMBtu/yr Methane = Methane Heating Value (Btu/lb) * Annual Methane Emissions (T/yr) * (2,000 lb/T) * 98% of stream is combusted / 10^6

MMBtu/yr Methane = (23,861 Btu/lb) * (0.64 T/yr) * (2,000 lb/T) * 98% / (10^6)

MMBtu/yr Methane = 29.93 MMBtu/yr

CALCULATION OF STORAGE TANK WORKING AND BREATHING POTENTIAL TO EMIT DURING FLARE DOWNTIME -SMS

DEWITT CENTRAL FACILITY 3 January 1st 2014 through May 1st 2014

BURLINGTON RESOURCES OIL & GAS COMPANY LP

Variable	Description	Units	Value
L_T	total loss = Ls + Lw	Ton/yr	See Table
L_S	standing loss = 365 Vv Wv Ke Ks	lb/yr	See Table
L_W	working loss = 0.001 Mv Pv Q Kn Kp	lb/yr	See Table
L_H	working loss = 0.001 Mv Pmax Qh	lb/hr	See Table
	Roof Construction		Cone
RVP	Condensate Reid Vapor Pressure	psia	13.77
ΔPb	Breather vent pressure range	psi	0.06
I	Solar insolation factor	Btu/ft2-day	1521
P_A	Atmospheric Pressure	psia	14.7
Mv	Vapor Molecular Weight	lb/lb-mol	40
T	Annual Average Temperature	°F	72.1
T_{AX}	Daily Maximum Ambient Temperature	°R	541.6
T_{AN}	Daily Minimum Ambient Temperature	°R	522.5
ΔT_A	Daily average ambient temperature range	°R	19.1
Kp	Product factor		1

		Tank Specifications							Material Specifications													VOC		Benzene	
		V/H	D	H/L	Capacity	Color		α	Mv	P_{MAX}	Q'	ΔTv	Hvo	T_{LA}	P_{VA}	Wv	ΔPv	Ke	Ks	L_S	L_T	L_H	L_T	L_H
Material	No. of Tanks	Tank Type	Tank Diameter (ft)	Tank Height/ Length (ft)	Tank Capacity (bbl)	Paint Color	Paint Conditions	Paint Solar Absorbance Factor	Vapor Molecular Weight	Reid Vapor Pressure (psia)	Max. Hourly Storage (bbl/hr)	Daily Vapor Temp. Range °F	Vapor Space Outage (ft)	Daily Average Liquid Surface Temp °R	Average Vapor Pressure (psia)	Vapor Density (lb/ft3)	Daily Vapor Pressure Range	Vapor Space Expan. Factor	Vented Vapor Sat. Factor	Standing Loss per tank (lb/yr)	Total Loss (lb/hr)	Total Loss (T/yr)	Total Loss (lb/hr)	Total Loss (T/yr)
Condensate	2	V	12	25	500	Gray	Good	0.54	40	13.77	500	36.75	12.63	539.8	15.456	0.10673	3.96891	-5.1024	0.09	0.00	**0.00**	**0.00**	**0.00**	**0.00**
Slop	1	V	12	25	500	Gray	Good	0.54	40	13.77	500	36.75	12.63	539.8	15.456	0.10673	3.96891	-5.1024	0.09	0.00	**0.00**	**0.00**	**0.00**	**0.00**
PW	1	V	12	25	500	Gray	Good	0.54	40	0.138	500	36.75	12.63	539.8	0.042	0.00029	0.02561	0.0662	0.97	0.19	**0.003**	**0.0001**	**0.00002**	**0.000001**

NOTE: Tank working and breathing emissions are based on the equations found in EPA AP 42 Chapter 7. All factors used are represented in the table on this page. The Condensate Reid Vapor Pressure and Vapor Molecular Weight are determined based on the WinSim condensate stream and Off Gas stream. All other variables are found in AP 42 Chapter 7 or are default unit values.

The emissions shown are due to flare maintenance occuring 2% of the year. During the flare downtime the wellhead would be shut in. Therefore, there would be no condensate or produced water liquids flowing to the tanks; however, any liquid already in the tanks would remain and have breathing (standing losses) emissions. These emissions would not be controlled, as the flare is down for maintenance. The calculations shown demonstrate this alternative operating scenario regarding flare maintenance and downtime. Based on 2% downtime, this scenario is being shown to occur for 175.2 hours in a year.

As shown on the summary page representing the Tank Emission sent to Flare, H_2S emissions are represented as occuring when the liquid streams flash during the change from a pressurized flow to the atmospheric tank. Due to the chemical properties of H_2S the most conservative approach is to represent that all H_2S in the liquid will immediately flash, and there will be no H_2S emitted during working and breathing while the liquids are stored. Since there will be no liquid flow during the flare downtime, there are no flash emissions and therefore no H_2S emissions from the standing loss of the tanks.

MSS CALCULATION OF COMPRESSOR ENGINE STARTER VENT POTENTIAL TO EMIT

DEWITT CENTRAL FACILITY 3 January 1st 2014 through May 1st 2014

BURLINGTON RESOURCES OIL & GAS COMPANY LP

Description	Facility Identification Number COMP-01-SV
Number of Engine Starts per Year	19
Number of Engine Starts per Hour	1
Start Volume per Event, scf	900
Fuel Stream Specific Gravity	0.8781
Fuel Stream Density, lb/scf [a]	0.0671
VOC Percentage in Fuel Stream, wt%	40%
Max Benzene Percentage in Gas Stream, wt%	0.26%
Max H_2S Percentage in Fuel Stream, wt%	0.10%
VOC Hourly Emission Rates (lb/hr): [b]	24.16
VOC Annual Emission Rates (T/yr): [c]	0.23
Benzene Hourly Emission Rates (lb/hr): [b]	0.16
Benzene Annual Emission Rates (T/yr): [c]	0.001
H_2S Hourly Emission Rates (lb/hr): [b]	0.06
H_2S Annual Emission Rates (T/yr): [c]	0.001

[a] Gas stream density is calculated as follows:

(28.96 lb/mole) / (379 scf/mole) * (0.8781) = 0.067 lb/scf

[b] Hourly starter vent VOC, benzene and H2S emissions are calculated based upon a conservative estimate of the portion of each consituent in the volume known to blow down from the engine source. An example calculation for VOC for COMP-01-SV is as follows:

VOC lb/hr = (1 startup/hr) * (900 scf/startup) * (0.067 lb/scf) * (40.00%) = 24.16 lb/hr

[c] Annual starter VOC emission rates are calculated as follows:

VOC lb/hr = (19 startups/yr) * (900 scf/startup) * (0.067 lb/scf) * (40.00%) / (2,000 lb/T) = 0.23 T/yr

SMSS - CALCULATION OF COMPRESSOR ENGINE BLOWDOWN POTENTIAL TO EMIT

DEWITT CENTRAL FACILITY 3 January 1st 2014 through May 1st 2014

BURLINGTON RESOURCES OIL & GAS COMPANY LP

Description	Facility Identification Number COMP-01-BD
Number of Blowdowns per Year	19
Number of Blowdowns per Hour	1
Blowdown Volume per Event, scf	1,061
Gas Stream Specific Gravity	0.8781
Gas Stream Density, lb/scf [a]	0.0671
Max VOC Percentage in Gas Stream, wt%	40%
Max Benzene Percentage in Gas Stream, wt%	0.26%
Max H_2S Percentage in Gas Stream, wt%	0.10%
VOC Hourly Emission Rates (lb/hr): [b]	28.48
VOC Annual Emission Rates (T/yr): [c]	0.27
Benzene Hourly Emission Rates (lb/hr):[b]	0.19
Benzene Annual Emission Rates (T/yr): [c]	0.002
H_2S Hourly Emission Rates (lb/hr): [b]	0.07
H_2S Annual Emission Rates (T/yr): [c]	0.001
Controlled VOC Hourly Emission Rates (lb/hr)[d]	0.57
Controlled VOC Annual Emission Rates (T/yr):[e]	0.01
Controlled Benzene Hourly Emission Rates (lb/hr):[d]	0.004
Controlled Benzene Annual Emission Rates (T/yr): [e]	0.00004
Controlled H_2S Hourly Emission Rates (lb/hr)[d]	0.001
Controlled H_2S Annual Emission Rates (T/yr):[e]	0.00002

[a] Gas stream density is calculated as follows:

(28.96 lb/mole) / (379 scf/mole) * (0.8781) = 0.067 lb/scf

[b] Hourly blowdown VOC, Benzene and H_2S emissions rates are calculated. An example calculation for VOC for COMP-01-BD is as follows:
VOC lb/hr = (1 blowdown/hr) * (1,061 scf/blowdown) * (0.067 lb/scf) * (40.00% VOC in Stream) * (100-98% controlled at flare) = 28.48 lb/hr

[c] Annual blowdown VOC, Benzene and H_2S emission rates are calculated as follows:

VOC lb/hr = (19 blowdowns/yr) * (1,061 scf/blowdown) * (0.067 lb/scf) * (40.00%) / (2,000 lb/T) * (100% - 98% controlled

[d] Hourly controlled blowdown VOC, Benzene and H_2S emissions are calculated based upon a conservative estimate of the portion of each consituent in the volume known to blowdown from the engine source. An example calculation for VOC for

VOC lb/hr = (1 blowdown/hr) * (1,061 scf/blowdown) * (0.067 lb/scf) * (40.00% VOC in Stream) * (100-98% controlled at

[e] Annual controlled blowdown VOC emission rates are calculated as follows:

VOC lb/hr = (19 blowdowns/yr) * (1,061 scf/blowdown) * (0.067 lb/scf) * (40.00%) / (2,000 lb/T) * (100% - 98% controlled

SMSS - PROCESS FLARE WASTE GAS COMBUSTION EMISSIONS

DEWITT CENTRAL FACILITY 3 January 1st 2014 through May 1st 2014

BURLINGTON RESOURCES OIL & GAS COMPANY LP

EPN	FIN	Description	LHV[a] (Btu/scf)	Waste Gas Flow Rate Hourly (MMBtu/hr)	Waste Gas Flow Rate Annual (MMBtu/yr)	Pollutant	Emission Factors	Units	Potential to Emit Hourly[b] (lb/hr)	Potential to Emit Annual[c] (T/yr)
FL-1-SMSS	COMP-01-BD	Process Flare	1,448	1.52	28.20	CO	0.2755	lb/MMBtu	0.42	0.004
		Compressor Blowdown Event				NO_X	0.1380	lb/MMBtu	0.21	0.002
						$PM/PM_{10}/PM_{2.5}$	-- [e]	--	--	--
						SO_2	-- [c]	--	0.13	0.002
						H_2S	-- [c]	--	0.001	0.00002

[a] Waste gas stream lower heating value was taken from the inlet gas analysis.

[b] Emission Factors for CO and NO_X are based upon the Draft TNRCC Guidance Document for Flares and Vapor Oxidizers (dated 10/00) for other high-Btu flares. An example calculation for hourly CO emissions for EPN Fl-1-SMSS follows:

CO (lb/hr) = (Hourly Waste Gas Flow Rate, MMBtu/hr)*(Emission Factor, lb/MMBtu)

CO (lb/hr) = (1.52 MMBtu/hr)*(0.2755 lb/MMBtu)

= 0.42 lb/hr CO

[c] H_2S emissions are routed from the separator to the flare and then converted to SO_2. SO_2 emission rates were determined based on the combustion efficiency of 98% H_2S converted to SO_2. H_2S emitted at the flare is 2% of the captured stream not converted by combustion. An example calculation for hourly SO_2 emissions for EPN FL-1-SMSS follows:

SO_2 (lb/hr) = (Source H_2S Emission Rate, lb/hr) * (98% captured H2S stream) * (98% conversion to SO_2 at combustion) * (1 mol H_2S/34.07 lb H_2S) * (64.06 lb SO2/1 mol SO_2)

SO_2 (lb/hr) = (0.07 lb/hr H2S from Blowdown)* (98%) * (98%) * (1 mol H2S/34.07 lb H2S) * (64.06 lb SO2/1 mol SO2)

= 0.13 lb/hr SO_2

[d] An example calculation for annual CO emissions for EPN FL-1-SMSS follows:

CO (T/yr) = (Annual Waste Gas Flow Rate, MMBtu/yr) * (Emission Factor, lb/MMBtu) * (1 T / 2,000 lb)

CO (T/yr) = (28.20 MMBtu/yr) * (0.2755 lb/MMBtu) * (1 T / 2,000 lb)

= 0.00 T/yr CO

[e] The process flares are smokeless per 40 CFR §60.18 requirements; therefore, PM emissions are negligible.

SMSS - CALCULATION OF FLARE FEED RATES FROM BLOWDOWN EVENTS

DEWITT CENTRAL FACILITY 3 January 1st 2014 through May 1st 2014

BURLINGTON RESOURCES OIL & GAS COMPANY LP

Max Engine BD Volume (Mscf/hr)	1.06
Max Engine BD Volume (scf/yr)	20
Gas Density (lb/scf)	0.0671

Constituent	Heating Value[a] (Btu/lb)	Inlet Gas Weight (%)	Engine BD Emissions[b]		Flare Feed Rate[c]	
			Hourly (lb/hr)	Annual (T/yr)	Hourly (MMBtu/hr)	Annual (MMBtu/yr)
Methane	23,861	43.31%	30.80	0.29	0.72	13.56
Ethane	22,304	16.27%	11.57	0.11	0.25	4.81
Propane	21,646	12.06%	8.58	0.08	0.18	3.39
I-Butane	21,242	3.93%	2.80	0.03	0.06	1.25
N-Butane	21,293	6.68%	4.75	0.04	0.10	1.67
I-Pentane	21,025	3.70%	2.63	0.02	0.05	0.82
N-Pentane	21,072	3.27%	2.33	0.02	0.05	0.83
Cyclopentane	20,350	0.00%	0.00	0.00	0.00	0.00
n-Hexane	20,928	1.67%	1.19	0.01	0.02	0.41
Cyclohexane	20,195	0.60%	0.43	0.00	0.01	0.00
Other Hexanes	20,928	3.38%	2.40	0.02	0.05	0.82
Heptanes	20,825	1.38%	0.98	0.01	0.02	0.41
Octanes	20,747	0.22%	0.16	0.001	0.003	0.04
Nonanes	20,687	0.08%	0.06	0.001	0.001	0.04
Decanes Plus	20,638	0.00%	0.00	0.00	0.00	0.00
Benzene	18,172	0.18%	0.13	0.001	0.002	0.04
Toluene	18,422	0.34%	0.24	0.002	0.004	0.07
Ethylbenzene	18,658	0.01%	0.01	0.0001	0.0002	0.004
Xylene	18,438	0.08%	0.06	0.001	0.001	0.04
				Totals:	**1.52**	**28.20**

[a] Heating values taken from Perry's Chemical Engineers' Handbook , Table 3-207 (pg. 3-155)

[b] Constituent Emission Rates were calculated from the known maximum blowdown volumes and density then proportioned using the Inlet Gas stream constituents weight percents. An example calculation for Methane emissions is as follows:

Methane (lb/hr) = Maximum BD Volume (Mscf/hr) * Gas Density (lb/scf) * Inlet Gas Weight % * 1000
Methane (lb/hr) = (1.06 Mscf/hr) * (0.0671 lb/scf) * 43.31% * 1,000
Methane (lb/hr) = 30.80 lb/hr

[c] An example calculation for the hourly flare feed rate for Methane is demonstrated.

MMBtu/hr Methane = Methane Heating Value (Btu/lb) * Hourly Methane Emissions (lb/hr) * 98% of stream is combusted / 10^6
MMBtu/hr Methane = (23,861 Btu/lb) * (0,030.80 lb/hr) * 98% / (10^6)
MMBtu/hr Methane = 0.72 MMBtu/hr

An example calculation for the annual flare feed rate for Methane is demonstrated.

MMBtu/yr Methane = Methane Heating Value (Btu/lb) * Annual Methane Emissions (T/yr) * (2,000 lb/T) * 98% of stream is combusted / 10^6
MMBtu/yr Methane = (23,861 Btu/lb) * (0.29 T/yr) * (2,000 lb/T) * 98% / (10^6)
MMBtu/yr Methane = 13.56 MMBtu/yr

G3516 LE Gas Petroleum Engine

858-999 bkW
1150-1340 bhp
1200-1400 rpm

2.0 g/bhp-hr NOx (NTE)

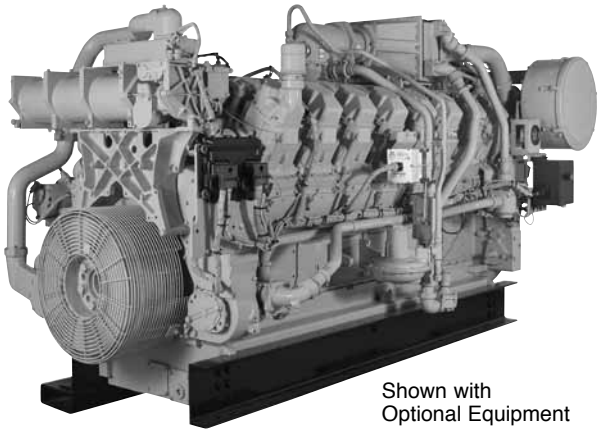

Shown with Optional Equipment

CAT® ENGINE SPECIFICATIONS

V-16, 4-Stroke-Cycle

Bore	170 mm (6.7 in.)
Stroke	190 mm (7.5 in.)
Displacement	69 L (4210 cu. in.)
Aspiration	Turbocharged-Aftercooled
Digital Engine Management Governor and Protection	Electronic (ADEM™ A3)
Combustion	Low Emission (Lean Burn)
Engine Weight, net dry (approx)	8015 kg (17,670 lb)
Power Density	8 kg/kW (13.2 lb/bhp)
Power per Displacement	19.3 bhp/L
Total Cooling System Capacity	217.7 L (57.5 gal)
Jacket Water	200.6 L (53 gal)
Aftercooler Circuit	17 L (4.5 gal)
Lube Oil System (refill)	424 L (112 gal)
Oil Change Interval	1000 hours
Rotation (from flywheel end)	Counterclockwise
Flywheel and Flywheel Housing	SAE No. 00
Flywheel Teeth	183

FEATURES

Engine Design
- Proven reliability and durability
- Ability to burn a wide spectrum of gaseous fuels
- Robust diesel strength design prolongs life and lowers owning and operating costs
- Broad operating speed range

Emissions
Meets U.S. EPA Spark Ignited Stationary NSPS Emissions for 2007/8

Lean Burn Engine Technology
Lean-burn engines operate with large amounts of excess air. The excess air absorbs heat during combustion reducing the combustion temperature and pressure, greatly reducing levels of NOx. Lean-burn design also provides longer component life and excellent fuel consumption.

Advanced Digital Engine Management
ADEM A3 control system providing integrated ignition, speed governing, protection, and controls, including detonation-sensitive variable ignition timing. ADEM A3 has improved: user interface, display system, shutdown controls, and system diagnostics.

Ease of Operation
Side covers on block allow for inspection of internal components

Full Range of Attachments
Large variety of factory-installed engine attachments reduces packaging time

Testing
Every engine is full-load tested to ensure proper engine performance.

Gas Engine Rating Pro
GERP is a PC-based program designed to provide site performance capabilities for Cat® natural gas engines for the gas compression industry. GERP provides engine data for your site's altitude, ambient temperature, fuel, engine coolant heat rejection, performance data, installation drawings, spec sheets, and pump curves.

Product Support Offered Through Global Cat Dealer Network
More than 2,200 dealer outlets

Cat factory-trained dealer technicians service every aspect of your petroleum engine

Cat parts and labor warranty

Preventive maintenance agreements available for repair-before-failure options

S•O•S℠ program matches your oil and coolant samples against Caterpillar set standards to determine:
- Internal engine component condition
- Presence of unwanted fluids
- Presence of combustion by-products
- Site-specific oil change interval

Over 80 Years of Engine Manufacturing Experience
Over 60 years of natural gas engine production

Ownership of these manufacturing processes enables Caterpillar to produce high quality, dependable products.
- Cast engine blocks, heads, cylinder liners, and flywheel housings
- Machine critical components
- Assemble complete engine

Web Site
For all your petroleum power requirements, visit www.catoilandgas.cat.com.

STANDARD EQUIPMENT

Air Inlet System
Air cleaner — intermediate-duty with service indicator

Control System
A3 ECU
Air-fuel ratio control

Cooling System
Thermostats and housing
Jacket water pump
Aftercooler water pump
Aftercooler core for sea-air atmosphere
Aftercooler thermostats and housing

Exhaust System
Watercooled exhaust manifolds

Flywheels & Flywheel Housings
SAE No. 00 flywheel
SAE No. 00 flywheel housing
SAE standard rotation

Fuel System
Gas pressure regulator
Natural gas carburetor

Ignition System
A3 ECU

Instrumentation
PL1000 Advisor panel

Lubrication System
Crankcase breather — top mounted
Oil cooler
Oil filter — RH
Oil bypass filter
Oil pan — shallow
Oil sampling valve
Turbo oil accumulator

Mounting System
Rails, engine mounting — 254 mm (10 in)

Protection System
Electronic shutoff system
Gas shutoff valve

General
Paint — Cat yellow
Vibration damper and guard — dual 484 mm (23 in)

OPTIONAL EQUIPMENT

Air Inlet System
Remote air inlet adapters
Precleaner

Charging System
Battery chargers
Charging alternators

Cooling System
Aftercooler core
Thermostatic valve
Temperature switch
Connections
Expansion and overflow tank
Water level switch gauge

Exhaust System
Flexible fittings
Elbows
Flange
Flange and exhaust expanders
Rain cap
Mufflers

Fuel System
Low pressure gas conversions
Propane gas valve and jet kits
Fuel filter

Instrumentation
PL1000 communications modules

Lubrication System
Oil bypass filter removal and oil pan accessories
Sump pump
Air prelube pump
Manual prelube pump
Lubricating oil

Mounting System
Rails
Vibration isolators

Power Take-Offs
Front accessory drives
Auxiliary drive shafts and pulleys
Front stub shaft
Pulleys

Protection System
Explosion relief valves, status control box interconnect wiring harness

Starting System
Air starting motor
Air pressure regulator
Air silencer
Electric air start controls
Electric starting motors — dual 24-volt
Starting aids
Battery sets (24-volt dry), cables, and rack

General
Flywheel intertia weight
Guard removal
Engine barring group
Premium 8:1 pistons
Premium cylinder heads

TECHNICAL DATA

G3516 LE Gas Petroleum Engine

Fuel System		2 g NOx NTE Rating DM8618-01	2 g NOx NTE Rating DM8620-01
Engine Power			
@ 100% Load	bkW (bhp)	999 (1340)	858 (1150)
@ 75% Load	bkW (bhp)	749 (1004)	643 (862)
Engine Speed	rpm	**1400**	**1200**
Max Altitude @ Rated Torque and 38°C (100°F)	m (ft)	304.8 (1000)	1219.2 (4000)
Speed Turndown @ Max Altitude, Rated Torque, and 38°C (100°F)	%	25	9.2
SCAC Temperature	°C (°F)	54 (130)	54 (130)
Emissions*			
NOx	g/bkW-hr (g/bhp-hr)	2.68 (2)	2.68 (2)
CO	g/bkW-hr (g/bhp-hr)	2.49 (1.86)	2.35 (1.75)
CO_2	g/bkW-hr (g/bhp-hr)	632 (471)	624 (466)
VOC**	g/bkW-hr (g/bhp-hr)	0.35 (0.26)	0.4 (0.3)
Fuel Consumption***			
@ 100% Load	MJ/bkW-hr (Btu/bhp-hr)	10.48 (7405)	10.36 (7324)
@ 75% Load	MJ/bkW-hr (Btu/bhp-hr)	10.79 (7628)	10.76 (7605)
Heat Balance			
Heat Rejection to Jacket Water			
@ 100% Load	bkW (Btu/mn)	741 (42,123)	639 (36,343)
@ 75% Load	bkW (Btu/mn)	616.7 (35,075)	554 (31,480)
Heat Rejection to Aftercooler			
@ 100% Load	bkW (Btu/mn)	167.8 (9546)	131.9 (7509)
@ 75% Load	bkW (Btu/mn)	108.6 (6179)	72.2 (4108)
Heat Rejection to Exhaust			
@ 100% Load LHV to 25° C (77° F)	bkW (Btu/mn)	837.8 (47,643)	694.6 (39,536)
@ 75% Load LHV to 25° C (77° F)	bkW (Btu/mn)	630.4 (35,848)	524.1 (29,806)
Exhaust System			
Exhaust Gas Flow Rate			
@ 100% Load	m^3/min (cfm)	217.0 (7663)	182.9 (6460)
@ 75% Load	m^3/min (cfm)	163.8 (5785)	138.9 (4905)
Exhaust Stack Temperature			
@ 100% Load	°C (°F)	467.22 (873)	452.2 (846)
@ 75% Load	°C (°F)	467.22 (873)	450.5 (843)
Intake System			
Air Inlet Flow Rate			
@ 100% Load	m^3/min (scfm)	80.6 (2847)	69.5 (2453)
@ 75% Load	m^3/min (scfm)	60.8 (2147)	52.8 (1864)
Gas Pressure	kPag (psig)	241.5-275.8 (35-40)	241.5-275.8 (35-40)

*at 100% load and speed, all values are listed as not to exceed
**Volatile organic compounds as defined in U.S. EPA 40 CFR 60, subpart JJJJ
***ISO 3046/1

GAS PETROLEUM ENGINE

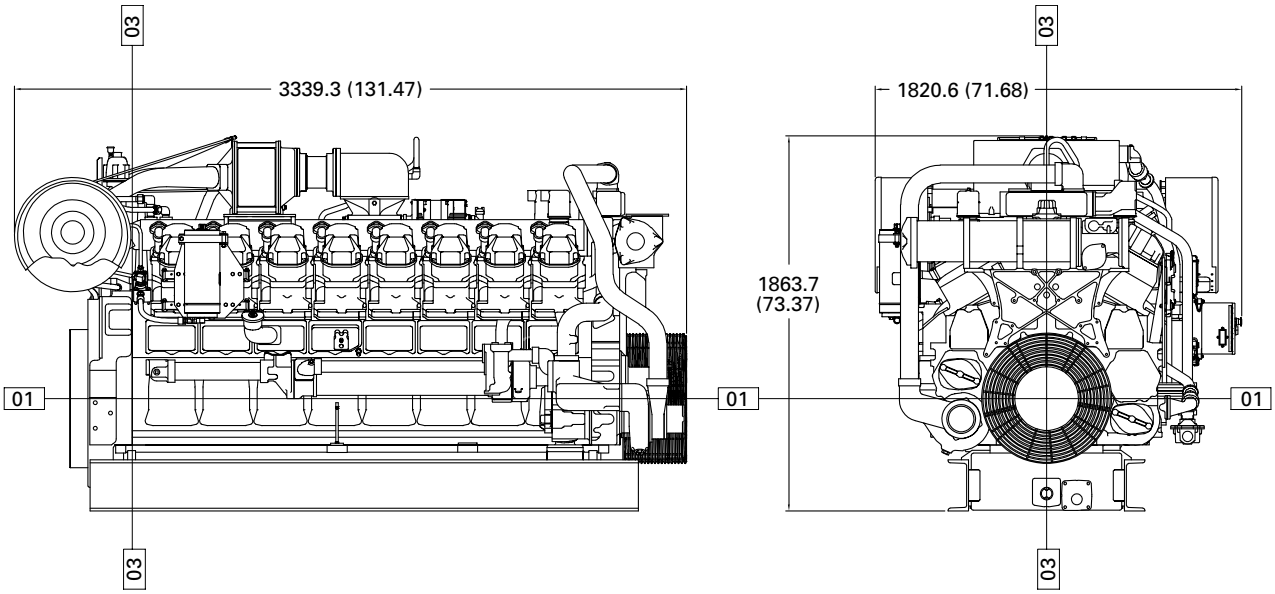

DIMENSIONS		
Length	mm (in.)	3339.3 (131.47)
Width	mm (in.)	1820.6 (71.68)
Height	mm (in.)	1863.7 (73.37)
Shipping Weight	kg (lb)	8015 (17,670)

Note: General configuration not to be used for installation. See general dimension drawings for detail (drawing #289-2971).

Dimensions are in mm (inches).

RATING DEFINITIONS AND CONDITIONS

Engine performance is obtained in accordance with SAE J1995, ISO3046/1, BS5514/1, and DIN6271/1 standards.

Transient response data is acquired from an engine/ generator combination at normal operating temperature and in accordance with ISO3046/1 standard ambient conditions. Also in accordance with SAE J1995, BS5514/1, and DIN6271/1 standard reference conditions.

Conditions: Power for gas engines is based on fuel having an LHV of 33.74 kJ/L (905 Btu/cu ft) at 101 kPa (29.91 in. Hg) and 15° C (59° F). Fuel rate is based on a cubic meter at 100 kPa (29.61 in. Hg) and 15.6° C (60.1° F). Air flow is based on a cubic foot at 100 kPa (29.61 in. Hg) and 25° C (77° F). Exhaust flow is based on a cubic foot at 100 kPa (29.61 in. Hg) and stack temperature.

Materials and specifications are subject to change without notice. The International System of Units (SI) is used in this publication.
CAT, CATERPILLAR, their respective logos, ADEM, “Caterpillar Yellow” and the “Power Edge” trade dress, as well as corporate and product identity used herein, are trademarks of Caterpillar and may not be used without permission.

Performance Numbers: DM8618-01, DM8620-01
LEHW0036-00 (11-09)
Supersedes LEHW6046-02

©2009 Caterpillar
All rights reserved.

Mailing address: **P.O. Box 90, Concord, Ontario, Canada, L4K 1B2**
Toll free: **1-800-872-1968** *Phone:* **905-660-6450** *Fax:* **905-660-6435** *E-mail:* **info@dcl-inc.com**

DCL International Inc.

To	Barry Loyd	Telephone	
	ISC	Facsimile	
		Email	
Date	December 15, 2010	No.of Pages	

RE: EMISSIONS GUARANTEE FOR CSI

Freddy,

We hereby guarantee that our QUICK-LID™ Model DC65Q-12 catalytic converter described below:

Catalyst model	DC65
Catalyst coating	Oxidation (Q)
Outside Diameter of catalyst substrate	30.75"
No. of catalyst substrates	1
Cell Density	300 cpsi

and sized for the following engine:

Engine model	CAT 3516 TALE
Power	1340 hp @ 1400 rpm
Fuel	Pipeline Quality Natural Gas

will perform as follows:

Emissions	**After Catalyst**
Carbon Monoxide (CO)	93 % reduction
Volatile Organic Compounds (VOCs)	45 % reduction
Formaldehyde (CH2O)	90 % reduction

for a period of 1 year or 8000 hours, whichever comes first, subject to all terms and conditions contained in the attached warranty document being respected and met.

Best regards,
DCL International, Inc.

Tawnya VanGroningen
Account Manager
North American Industrial Catalyst Division

Quote#16-1448