T9074-AS-GIB-010/271

REVISION 1

NAVSEA TECHNICAL PUBLICATION

REQUIREMENTS FOR NONDESTRUCTIVE TESTING METHODS

THIS REVISION SUPERSEDES T9074-AS-GIB-010/271 DATED 30 APRIL 1997.

DISTRIBUTION STATEMENT A: APPROVED FOR PUBLIC RELEASE; DISTRIBUTION UNLIMITED.

PUBLISHED BY DIRECTION OF COMMANDER, NAVAL SEA SYSTEMS COMMAND

T9074-AS-GIB-010

0910-LP-112-4510

11 SEPTEMBER 2014

LIST OF EFFECTIVE PAGES

Dispose of superseded pages in accordance with applicable regulations.

Dates of issue for original and subsequent revisions:

Original.....	30 April 1997
ACN-1	16 February 1999
Revision 1.....	11 September 2014

TOTAL NUMBER OF PAGES IN THIS PUBLICATION IS 116, CONSISTING OF THE FOLLOWING:

Page No.

Title and A

CHENG's Intent/blank

i-xiii/(xiv blank)

1-1 through 1-5/(1-6 blank)

2-1 through 2-3/(2-4 blank)

3-1 through 3-27/(3-28 blank)

4-1 through 4-8

5-1 through 5-6

6-1 through 6-26

7-1 through 7-4

8-1 through 8-2

9-1/(9-2 blank)

A-1 through A-4

B-1 through B-7/(B-8 blank)

CHENG'S INTENT

NAVSEA Technical Publication T9074-AS-GIB-010/271, Requirements for Nondestructive Testing Methods, was last revised in 1999 with issuance of Advanced Change Notice 1 (dated 16 February 1999) and covers the requirements for conducting nondestructive testing (NDT) used in determining the presence of discontinuities in metals. It also contains the minimum requirements necessary to qualify NDT personnel, procedures, and equipment.

The NAVSEA Chief Engineer's (CHENG's) intent for the changes in Revision 1 is to reduce nondestructive testing and evaluation (NDT&E) costs without reducing quality or capability. Examples such as the allowance of local approvals at Regional Maintenance Centers (RMCs), allowing delegation of some NDT Examiner duties to allow work flexibility, addition of Selenium-75 as a gamma radiation source option that potentially reduces radiation boundary footprints, and usage of computed radiography (CR) to evaluate pipe wall erosion/corrosion through lagging are expected to meet the Commander's affordability expectations. Several changes, such as deleting the use of direct current (DC) yokes for magnetic particle testing (MT) and requiring local NDT Examiners to approve light-emitting diode (LED) lighting sources are known performance improvements the Shipyards have agreed to implement.

The use of the latest, affordable tools and methods for NDT&E is encouraged, and implementation of Revision 1 is expected to be an overall improvement in NDT&E affordability. Should you find this intent is not being realized upon use of this revision, please contact the NDT&E Technical Warrant Holder, Dr. Kirsten Green (SEA 05P2) at (301) 227-5074, for resolution. Errors, omissions, discrepancies, and suggestions for improvement to Revision 1 shall also be submitted as a Technical Manual Deficiency/Evaluation Report (TMDER). The NAVSEA/SPAWAR Technical Manual Deficiency/Evaluation Report form, NAVSEA 4160/1 is included at the back of this document.

L. B. FULLER
Rear Admiral, USN
NAVSEA CHENG

TABLE OF CONTENTS

Chapter/Paragraph Page

CHENG'S INTENT

LIST OF ILLUSTRATIONS x

LIST OF TABLES xi

FOREWORD xii

CHAPTER 1 SCOPE 1-1

1.1 GENERAL. 1-1
1.1.1 Inspection Areas. 1-1
1.1.2 Calibration. 1-1
1.1.3 Safety. 1-1
1.2 CLASSIFICATION. 1-1
1.3 ACCEPTANCE STANDARDS. 1-1
1.4 TIME OF INSPECTION. 1-1
1.5 GENERAL DEFINITIONS. 1-1
1.5.1 Authorized Representative of the Naval Sea Systems Command (NAVSEA). 1-2
1.5.2 Government inspector. 1-2
1.5.3 Activity. 1-2
1.5.4 Nominal Thickness. 1-2
1.5.5 Level III NDT Examiner. 1-2
1.5.6 Level I NDT Operator. 1-2
1.5.7 Level II NDT Inspector. 1-2
1.6 NONDESTRUCTIVE TEST PERSONNEL CERTIFICATION. 1-2
1.6.1 Training and Experience Requirements for Initial Certification. 1-2
1.6.1.1 Limited Certifications. 1-2
1.6.2 Examiner Personnel Testing Requirements. 1-3
1.6.2.1 Examiner Specific Examination. 1-3
1.6.3 Certification of Personnel. 1-3
1.6.3.1 Other Methods. 1-3
1.6.4 Recertification. 1-3
1.6.4.1 Maintenance. 1-3
1.6.5 Alternate Certification. 1-3
1.6.5.1 Naval Personnel. 1-3
1.6.5.2 Other Certification Programs. 1-3
1.6.6 Assessment. 1-4
1.6.7 Vision Tests. 1-4
1.6.7.1 General. 1-4
1.6.7.2 Vision Correction. 1-4
1.6.8 Personnel Records. 1-4
1.6.9 NDT Certification Transfer. 1-4
1.6.10 Oversight. 1-4
1.6.10.1 Annual Surveillances. 1-4
1.6.10.2 Technical Performance Evaluations. 1-4
1.7 PROCEDURE QUALIFICATION AND APPROVAL. 1-5
1.7.1 Development and Certification. 1-5
1.7.2 Qualification. 1-5

1.7.3 Approval. 1-5
1.7.4 Transfer. 1-5
1.8 INSPECTION RECORDS. 1-5
1.8.1 General. 1-5
1.8.2 Inspection Record Attributes that Do Not Change. 1-5
1.8.3 Signature. 1-5
1.8.4 Maintenance of Inspection Records. 1-5

CHAPTER 2 APPLICABLE DOCUMENTS 2-1

2.1 GOVERNMENT DOCUMENTS. 2-1
2.1.1 Specifications, Standards, and Handbooks. 2-1
2.1.2 Other Government Documents, Drawings and Publications. 2-1
2.2 NON-GOVERNMENT PUBLICATIONS. 2-2
2.3 ORDER OF PRECEDENCE. 2-3

CHAPTER 3 RADIOGRAPHIC TESTING 3-1

3.1 INTENDED USE. 3-1
3.2 DEFINITIONS. 3-1
3.2.1 Material Thickness (T_m). 3-1
3.2.2 Maximum Effective Radiation Source Dimension. 3-1
3.2.3 Multiple Film Technique. 3-1
3.2.4 Specimen Thickness (T_s). 3-1
3.3 GENERAL REQUIREMENTS. 3-1
3.3.1 Extent of Radiographic Inspection. 3-2
3.3.1.1 Radiographic Shooting Sketch (RSS) for Castings. 3-2
3.3.1.2 Inspection of Heat-Treated Items. 3-2
3.3.1.3 Inspection of Machined Items. 3-2
3.3.1.4 Inspection of Weldments. 3-2
3.3.2 Radiographic Procedure. 3-2
3.3.2.1 Minimum Radiographic Procedure Requirements. 3-2
3.4 RADIOGRAPHY REQUIREMENTS. 3-3
3.4.1 Direction of Radiation. 3-3
3.4.2 Screens and Filters. 3-3
3.4.3 Film. 3-3
3.4.3.1 Film Quality. 3-3
3.4.3.2 Film Density. 3-4
3.4.3.3 Multiple Film Techniques. 3-4
3.4.4 Filmless Techniques. 3-4
3.4.5 Radiation Sources. 3-4
3.4.6 Source-To-Film Distance. 3-4
3.4.6.1 Calculations. 3-4
3.4.6.2 Film-Specimen Contact. 3-4
3.4.6.3 Reduced Source-To-Film Distance. 3-4
3.4.7 Radiographic Location Markers. 3-5
3.4.8 Film Identification. 3-5
3.4.9 Maintenance of Radiographic Records. 3-5
3.4.10 Darkroom Facilities. 3-5
3.4.11 Film Viewing Facilities. 3-5
3.4.11.1 Film Viewing Equipment. 3-5
3.4.12 Surface Preparation of Components and Welds Prior to Radiography. 3-5
3.4.13 Safety. 3-5
3.4.14 Interpretation of Radiographs. 3-6
3.4.15 Radiographic Records. 3-6

3.4.16 Availability of Radiographs. 3-6
3.5 PENETRAMETERS. 3-7
3.5.1 Penetrameter Material. 3-7
3.5.1.1 Dissimilar Metal Welds. 3-8
3.5.1.1.1 Dissimilar Metal Welds of Same Group. 3-8
3.5.1.1.2 Dissimilar Metal Welds of Different Groups. 3-8
3.5.1.2 Other Metals. 3-8
3.5.2 Penetrameter Dimensions. 3-8
3.5.3 Penetrameter Identification. 3-8
3.5.3.1 Lead Number Placement for Circular Penetrameters. 3-8
3.5.3.2 Identification for Special Quality Levels. 3-8
3.5.4 Penetrameter Selection. 3-8
3.5.4.1 Welds. 3-8
3.5.4.2 Castings and Forgings. 3-9
3.5.5 Number, Location, and Placement of Penetrameters. 3-10
3.5.5.1 Penetrameter Location. 3-10
3.5.5.1.1 Film-Side Penetrameter Technique (Double-Wall Exposure). 3-10
3.5.5.1.2 Film-Side Penetrameter Technique (Single-Wall Exposure). 3-10
3.5.5.1.3 Separate Block Penetrameter Technique. 3-10
3.5.5.2 Requirements for Castings and Forgings. 3-10
3.5.5.3 Requirements for Welds. 3-11
3.5.5.3.1 Penetrameter Image Position. 3-11
3.5.5.3.2 Penetrameter Image Location. 3-11
3.5.5.3.3 Penetrameters on Weld. 3-11
3.5.5.3.4 Penetrameter Orientation. 3-12
3.5.5.3.5 Obstructions. 3-12
3.5.5.3.6 Tapered and Fillet Welds. 3-13
3.5.5.4 Radiography of Parts. 3-13
3.6 SHIMS. 3-13
3.7 RADIOGRAPHIC QUALITY LEVELS. 3-14
3.7.1 X-ray Radiography. 3-15
3.7.2 Radioisotope Radiography. 3-15
3.8 SINGLE-WALL AND DOUBLE-WALL RADIOGRAPHY. 3-15
3.8.1 Single-Wall Radiography. 3-15
3.8.2 Double-Wall Radiography. 3-15
3.8.2.1 Double-Wall Exposure/Single-Wall Viewing. 3-15
3.8.2.2 Double-Wall Exposure/Double-Wall Viewing. 3-15
3.9 RADIOGRAPHY OF REPAIR WELDS. 3-16
3.10 RADIOGRAPHY OF CASTINGS AND FORGINGS. 3-16
3.11 RADIOGRAPHIC FILM OWNERSHIP. 3-16

CHAPTER 4 MAGNETIC PARTICLE TESTING 4-1

4.1 INTENDED USE. 4-1
4.2 DEFINITIONS. 4-1
4.2.1 Relevant Indications. 4-1
4.2.2 Indication. 4-1
4.2.3 Non-Relevant Indications. 4-1
4.3 MAGNETIC PARTICLE INSPECTION REQUIREMENTS. 4-1
4.3.1 General Requirements. 4-1
4.3.1.1 Method. 4-1
4.3.1.1.1 Lighting in Test Area. 4-1
4.3.1.2 Procedure. 4-2
4.3.1.3 Inspection Through Coatings. 4-2

4.3.1.4 Surface Preparation. 4-2
4.3.1.4.1 Cleaning and Masking. 4-2
4.3.1.4.2 Cleaning Solution. 4-2
4.3.1.5 Direction of Magnetization. 4-2
4.3.1.6 Demagnetizing Apparatus. 4-3
4.3.1.6.1 Demagnetization. 4-3
4.3.1.7 Equipment Accuracy. 4-3
4.3.1.7.1 DC Portable Prod and Stationary Magnetic Particle Equipment. 4-3
4.3.1.7.2 Yoke Equipment. 4-3
4.3.1.8 Magnetizing Current. 4-3
4.3.1.9 Record Requirements. 4-3
4.3.2 Wet Method. 4-3
4.3.2.1 General Requirements. 4-3
4.3.2.1.1 Equipment. 4-3
4.3.2.2 Vehicles. 4-4
4.3.2.2.1 Cleaning and Drying. 4-4
4.3.2.3 Magnetic Particles. 4-4
4.3.2.4 Suspensions. 4-4
4.3.2.5 Procedure. 4-4
4.3.2.5.1 Continuous Method. 4-4
4.3.2.5.2 Residual Method. 4-4
4.3.2.5.3 Circular Magnetization; Central Conductor (Indirect Method). 4-4
4.3.2.5.4 Circular Magnetization; Item as Conductor (Direct Method). 4-4
4.3.2.5.5 Circular Magnetization; Magnetizing Current. 4-5
4.3.2.5.6 Longitudinal Magnetization. 4-5
4.3.2.5.7 Longitudinal Magnetizing Current. 4-5
4.3.2.6 Maintenance of suspension. 4-5
4.3.2.6.1 Concentration of Suspension Test. 4-5
4.3.3 Dry Powder Method. 4-6
4.3.3.1 General Requirements for Magnetic Particles. 4-6
4.3.3.2 Application and Removal of Particles. 4-6
4.3.3.2.1 Removal of Excess Particles. 4-6
4.3.3.2.2 Automated Equipment. 4-6
4.3.3.3 Magnetizing Procedures. 4-6
4.3.3.3.1 Circular Magnetization. 4-6
4.3.3.3.2 Longitudinal Magnetization. 4-6
4.3.3.3.3 Yoke Magnetization. 4-6
4.3.3.3.4 Magnetizing Current (Prod Methods). 4-6
4.3.3.4 Magnetizing Technique (Yoke and Prod). 4-6
4.3.3.4.1 Weld Inspection. 4-6
4.3.3.4.2 Base Metal. 4-6
4.3.3.4.3 Continuous Magnetization. 4-6
4.4 EVALUATION OF INDICATIONS. 4-7
4.5 DETERMINATION OF RELEVANCY. 4-7
4.6 FINAL CLEANING. 4-7
4.7 ARC STRIKES. 4-7
4.7.1 Arc Strikes in High Hardenability Materials. 4-7
CHAPTER 5 LIQUID PENETRANT TESTING 5-1
5.1 INTENDED USE. 5-1
5.2 DEFINITIONS. 5-1
5.3 INSPECTION METHODS. 5-1
5.3.1 Liquid Penetrant Material. 5-1

5.4 GENERAL REQUIREMENTS. 5-1
5.4.1 Procedure. 5-2
5.4.1.1 Change of Penetrant Materials. 5-2
5.4.1.2 Record Requirements. 5-2
5.5 SURFACE PREPARATION. 5-2
5.5.1 Finished Surfaces. 5-2
5.6 TEST PROCEDURES. 5-3
5.6.1 Order of Testing. 5-3
5.6.2 Pre-Test Cleanliness. 5-3
5.6.2.1 Qualification of Alternate Precleaners. 5-3
5.6.3 Temperature. 5-3
5.6.4 Penetrant Application. 5-4
5.6.4.1 Application of Emulsifier (Methods B and D). 5-4
5.6.5 Removal of Penetrant. 5-4
5.6.5.1 Method C Materials. 5-4
5.6.5.2 Method B and D Materials. 5-4
5.6.5.3 Method A Only. 5-4
5.6.6 Surface Drying. 5-5
5.6.6.1 Method C. 5-5
5.6.6.2 Methods A, B, and D. 5-5
5.6.7 Application of Developer. 5-5
5.6.7.1 Nonaqueous Wet Developer. 5-5
5.6.7.2 Dry Developer. 5-5
5.6.7.3 Aqueous Wet Developer. 5-5
5.6.8 Lighting in Test Area. 5-5
5.6.9 Final Cleaning. 5-5
5.6.10 Safety Precautions. 5-5
5.7 DETERMINATION OF RELEVANCY. 5-6

CHAPTER 6 ULTRASONIC TESTING 6-1

6.1 INTENDED USE. 6-1
6.2 DEFINITIONS. 6-1
6.2.1 Acoustically Similar Materials. 6-1
6.2.2 Amplitude Rejection Level (ARL). 6-1
6.2.3 As-Welded Condition. 6-1
6.2.4 Calibration. 6-1
6.2.5 Calibration Reflectors. 6-1
6.2.6 Calibration Standard. 6-1
6.2.7 Class of Weld. 6-1
6.2.8 Continuous Scan. 6-1
6.2.9 Disregard Level (DRL). 6-1
6.2.10 Full Screen Height. 6-1
6.2.11 IIW Block. 6-2
6.2.12 Instrument Display. 6-2
6.2.13 Peak Indication. 6-2
6.2.14 Ultrasonic Test Sensitivity. 6-2
6.2.15 Ultrasonically Sound Material. 6-2
6.2.16 Weld Heat Affected Zone (HAZ). 6-2
6.3 PROCEDURE AND TEST METHODS. 6-2
6.3.1 Test Method Selection. 6-2
6.3.2 Surface Finish. 6-2
6.3.3 Testing Speed. 6-2
6.3.4 Couplant. 6-2

6.3.5 Calibration. 6-2
6.4 EQUIPMENT. 6-3
6.5 GENERAL REQUIREMENTS. 6-3
6.5.1 Equipment Requirements. 6-3
6.5.1.1 Basic Instrument Qualification - A-Scan Display Instruments. 6-3
6.5.1.1.1 Vertical Linearity. 6-3
6.5.1.1.2 Horizontal Linearity. 6-3
6.5.1.1.3 Resolution. 6-3
6.5.1.1.4 Attenuation. 6-3
6.5.1.2 Basic Instrument Qualification - Thickness Gauge. 6-3
6.5.1.3 Frequency of Basic Instrument Qualification. 6-3
6.5.1.4 Shear Wave Transducers. 6-3
6.5.2 Inspection Procedure. 6-3
6.5.2.1 Procedure Requalification. 6-4
6.5.3 Discontinuity Evaluation. 6-4
6.5.4 Records. 6-4
6.6 TEST METHODS. 6-4
6.6.1 Forged, Wrought, and Extruded Material. 6-4
6.6.1.1 Ring Forgings. 6-5
6.6.1.1.1 Shear Wave Tests of Ring Forgings. 6-5
6.6.1.1.1.1 Test Calibration, Shear Wave. 6-5
6.6.1.1.1.2 Testing, Shear Wave. 6-6
6.6.1.1.2 Longitudinal Wave Tests of Ring Forgings. 6-6
6.6.1.1.2.1 Test Calibration, Longitudinal Wave. 6-6
6.6.1.1.2.2 Testing, Longitudinal Wave. 6-6
6.6.1.2 Rectangular Forgings. 6-6
6.6.1.2.1 Test Calibration, Longitudinal Wave. 6-6
6.6.1.2.2 Testing - Longitudinal Wave. 6-6
6.6.1.3 Round and Multi-Sided Forged or Wrought Bars Including Disc or Pancake Forgings. 6-7
6.6.1.3.1 Test Calibration, Longitudinal Wave. 6-7
6.6.1.3.2 Testing - Longitudinal Wave. 6-7
6.6.2 Plate and Sheet. 6-7
6.6.2.1 Shear Wave Testing Technique. 6-7
6.6.2.1.1 Test Calibration, Shear Wave. 6-7
6.6.2.1.2 Grid Test Procedure. 6-7
6.6.2.1.3 Continuous Scanning Procedure. 6-7
6.6.2.2 Longitudinal Wave Testing Technique. 6-7
6.6.2.2.1 Testing Calibration, Longitudinal Wave. 6-7
6.6.2.2.2 Test Procedures. 6-7
6.6.2.2.2.1 Continuous Method. 6-7
6.6.2.2.2.2 Static Method. 6-7
6.6.3 Pipes and Tubes. 6-8
6.6.3.1 Scanning Technique. 6-8
6.6.3.2 Test Calibration, Radial Defects Detection. 6-8
6.6.3.3 Test, Radial Defects. 6-8
6.6.4 Ultrasonic Inspection of Weldments. 6-8
6.6.4.1 Scope. 6-8
6.6.4.2 General Requirements. 6-8
6.6.4.2.1 Application. 6-8
6.6.4.2.2 Surface Finish. 6-8
6.6.4.2.3 Limitations. 6-8
6.6.4.2.4 Calibration Standards. 6-8
6.6.4.2.4.1 Butt Welds, Corner Welds, Tee Welds for Discontinuities into the Through Member, and Tee Weld Volumetric Inspection. 6-8

6.6.4.2.4.2 Detection of Lack of Penetration in Full Penetration Tee Welds. 6-9
6.6.4.3 Specific Requirements for Butt and Corner Welds and the Volumetric Inspection of Tee Welds. 6-9
6.6.4.3.1 Instrument. 6-9
6.6.4.3.2 Transducers. 6-9
6.6.4.3.2.1 Size. 6-9
6.6.4.3.2.2 Frequency. 6-9
6.6.4.3.2.3 Angle. 6-9
6.6.4.3.3 Calibration. 6-9
6.6.4.3.3.1 Class I Welds. 6-9
6.6.4.3.3.2 Class II and III Welds. 6-9
6.6.4.3.4 Procedure. 6-10
6.6.4.3.4.1 Longitudinal Discontinuities. 6-10
6.6.4.3.4.1.1 One Directional Coverage. 6-10
6.6.4.3.4.2 Transverse Discontinuities. 6-10
6.6.4.3.4.2.1 Butt and Corner Welds Ground Flush. 6-10
6.6.4.3.4.2.2 Butt and Corner Welds Not Ground Flush. 6-10
6.6.4.3.4.2.3 Tee Welds Inspected from the Through Member Surface Opposite the Attached Member (Required Method When Accessible). 6-10
6.6.4.3.4.2.4 Tee Welds Inspected from the Attached Member. 6-10
6.6.4.3.4.3 Discontinuity Evaluation. 6-10
6.6.4.3.5 Transverse Discontinuities (Special Case). 6-11
6.6.4.4 Specific Requirements for Tee Welds that Are Not Volumetrically Inspected. 6-11
6.6.4.4.1 Detection of Lack of Penetration in Full Penetration Tee Welds. 6-11
6.6.4.4.1.1 Search Units. 6-11
6.6.4.4.1.2 Calibration. 6-11
6.6.4.4.1.3 Procedure. 6-11
6.6.4.4.2 Detection of Discontinuities into the Through Member. 6-11
6.6.4.4.2.1 Inspection Zone. 6-12
6.6.4.4.2.2 Search Units. 6-12
6.6.4.4.2.3 Calibration. 6-12
6.6.4.4.2.4 Procedure. 6-12
6.6.4.5 Record of Inspection Results. 6-13
6.7 THICKNESS MEASUREMENTS. 6-13
6.7.1 Scope. 6-13
6.7.2 Calibration. 6-13
6.7.3 Painted/Coated Surfaces. 6-13
6.7.4 Method. 6-13
6.8 BOND TESTING OF WELD DEPOSITED MATERIALS. 6-13
6.8.1 Scope. 6-13
6.8.1.1 Method. 6-13
6.8.2 Transducers. 6-14
6.8.3 Calibration of Test Equipment. 6-14
6.8.4 Scanning. 6-14
6.8.4.1 Continuous Scanning. 6-14
6.8.4.2 Intermittent Scanning. 6-14
6.8.4.3 Calibration for Ultrasonic Testing of Nonparallel Surfaces. 6-14
6.8.4.4 Continuous Scanning of Nonparallel Surfaces. 6-15
6.8.5 Marking. 6-15
6.8.6 Flaw Plotting. 6-15

CHAPTER 7 EDDY CURRENT TESTING 7-1

7.1 INTENDED USE. 7-1
7.2 DEFINITIONS. 7-1
7.2.1 Normalize/Normalization. 7-1

7.3 EDDY CURRENT INSPECTION REQUIREMENTS. 7-1
7.3.1 General Requirements. 7-1
7.3.1.1 Method. 7-1
7.3.1.2 Surface Finish. 7-1
7.3.2 Procedure. 7-1
7.3.3 Records. 7-2
7.4 EQUIPMENT REQUIREMENTS. 7-2
7.4.1 Eddy Current Instrument. 7-2
7.4.2 Performance Verification Reference Block. 7-2
7.5 STANDARDIZATION. 7-2
7.5.1 Painted/Coated Surfaces. 7-2
7.6 TEST TECHNIQUE. 7-3
7.6.1 Toe of Weld Scan. 7-3
7.6.2 Weld and HAZ Scan. 7-3
7.6.3 Inspection of Surfaces Other Than Welds. 7-3
7.6.4 Indexing. 7-3
7.7 EVALUATION OF TEST RESULTS. 7-3

CHAPTER 8 VISUAL TESTING 8-1

8.1 INTENDED USE. 8-1
8.2 DEFINITIONS. 8-1
8.3 REFERENCE STANDARD. 8-1
8.4 PROCEDURE REQUIREMENTS. 8-1
8.5 RECORDS. 8-1
8.6 INSPECTION TECHNIQUES. 8-2
8.7 DIMENSIONAL INSPECTION ACCURACY. 8-2
8.8 LIGHTING. 8-2

CHAPTER 9 NOTES 9-1

9.1 SUPERSEDURE INFORMATION. 9-1

APPENDIX A COMPUTED RADIOGRAPHY REQUIREMENTS FOR THE DETECTION AND MEASUREMENT OF PIPE CORROSION AND EROSION A-1

A.1 SCOPE. A-1
A.1.1 Supplemental Requirements. A-1
A.1.2 CR Guidance/Tutorial/Definitions. A-1
A.1.3 CR Limitations. A-1
A.2 INSPECTION PROCEDURE. A-1
A.2.1 Procedure Qualification. A-2
A.2.2 Procedure Approval. A-2
A.3 COMPUTED RADIOGRAPHY EQUIPMENT. A-2
A.4 COMPUTED RADIOGRAPHY PERSONNEL REQUIREMENTS. A-2
A.5 COMPUTED RADIOGRAPHY TECHNIQUE REQUIREMENTS. A-2
A.5.1 Reference Standards. A-2
A.5.2 Reference Standard Location. A-3
A.5.4 Source/Imaging Plate Alignment. A-3
A.5.5 Radiographic Contrast. A-3
A.5.6 Exposure/Pixel Value. A-4
A.6 INADVERTENT RADIOGRAPHY. A-4
A.7 RECORDS. A-4

APPENDIX B REQUIREMENTS FOR ULTRASONIC CHARACTERIZATION AND SIZING INSPECTION OF EMBEDDED AND SURFACE CONNECTED DISCONTINUITIES B-1

B.1 SCOPE. B-1
B.1.1 Certification. B-1
B.1.2 Procedure. B-1
B.2 DEFINITIONS. B-1
B.2.1 Absolute Arrival Time Technique (AATT). B-1
B.2.2 Collateral Echo 1 (CE-1). B-1
B.2.3 Collateral Echo 2 (CE-2). B-1
B.2.4 Creeping Wave. B-1
B.2.5 Echo Dynamics. B-1
B.2.6 High-Angle Longitudinal Wave (HAL)Technique. B-1
B.2.7 Planar Discontinuity. B-2
B.2.8 Specular Reflection. B-2
B.2.9 Tip Signal. B-2
B.2.10 Volumetric Discontinuity. B-2
B.3 EQUIPMENT. B-2
B.3.1 Ultrasonic Instrument. B-2
B.3.2 Transducers. B-2
B.3.3 Calibration Blocks and Reference Standards. B-2
B.3.4 Couplant. B-2
B.4 CALIBRATIONS. B-2
B.4.1 Calibration. B-2
B.4.1.1 Curved Surfaces. B-2
B.4.2 Calibration Interval. B-2
B.5 PREREQUISITES. B-3
B.5.1 Inspection Area. B-3
B.5.2 Recommended Practice. B-3
B.5.3 Surface Preparation. B-3
B.5.4 Scanning. B-3
B.5.5 Scanning Considerations. B-3
B.6 DISCONTINUITY CHARACTERIZATION. B-3
B.6.1 Characterization. B-3
B.6.2 Straight Beam Evaluation. B-3
B.6.3 Shear Wave Evaluation. B-3
B.6.4 Echo Dynamics. B-3
B.6.5 Transducer Skew. B-4
B.6.6 Orbit the Discontinuity. B-4
B.6.7 30-70-70 Creeping Wave Technique. B-4
B.7 SIZING DISCONTINUITIES. B-4
B.7.1 Sizing Volumetric Discontinuities/Rapid Drop Method. B-4
B.7.2 Sizing Planar Discontinuities. B-4
B.7.2.1 Straight Beam Longitudinal Wave Technique. B-4
B.7.2.2 Absolute Arrival Time Technique (AATT). B-4
B.7.2.3 High-Angle Techniques. B-4
B.7.3 Evaluation. B-5
B.8 RECORDS. B-5
B.8.1 Reporting Requirements. B-5

LIST OF ILLUSTRATIONS

Figure Title Page

Figure 3-1. Recommended X-ray Voltage Settings and Radioisotope Sources to Be Used with Various Steel and Similar Alloys. 3-17

Figure 3-2. Recommended X-ray Voltage Settings and Radioisotope Sources to Be Used with Various Copper-Base and Similar Alloys. 3-18

Figure 3-3. Recommended X-ray Voltage Settings and Radioisotope Sources to Be Used with Various Aluminum, Magnesium and Similar Alloys. 3-19

Figure 3-4. Maximum Allowed U_g. 3-20

Figure 3-5. Penetrameter Designs. 3-21

Figure 3-6. Penetrameter Identification Notching. 3-22

Figure 3-7. Examples of T_m, T_s, and Penetrameter Placement: Single Wall, No Reinforcement, No Back-Up Strip. 3-23

Figure 3-8. Examples of T_m, T_s, and Penetrameter Placement: Single Wall, Weld Reinforcement, No Back-Up Strip. 3-23

Figure 3-9. Examples of T_m, T_s, and Penetrameter Placement: Single Wall, Weld Reinforcement, Back-Up Strip. 3-24

Figure 3-10. Examples of T_m, T_s, and Penetrameter Placement: Single Wall, Integral Backing Ring, Weld Reinforcement. 3-24

Figure 3-11. Examples of T_m, T_s, and Penetrameter Placement: Single Wall, Weld Reinforcement, Cladding Redeposited Over Weld in Base Metal. 3-25

Figure 3-12. Examples of T_m, T_s, and Penetrameter Placement: Double Wall, Double Wall Viewing, Weld Reinforcement and Back-Up Strip. 3-25

Figure 3-13. Examples of T_m, T_s, and Penetrameter Placement: Double Wall, Single Wall Viewing. 3-26

Figure 3-14. Examples of T_m, T_s, and Penetrameter Placement: Full Penetration Weld, Single Wall. 3-27

Figure 3-15. Examples of T_m, T_s, and Penetrameter Placement: Root Connection Weld, Single Wall. 3-27

Figure 4-1. Magnetic Particle Field Indicator. 4-8

Figure 6-1. Skip Distance Example. 6-16

Figure 6-2. Inspection Zones for Volumetric Inspection of Welds. 6-17

Figure 6-3. Example Full Coverage Scanning Techniques for Butt Welds. 6-18

Figure 6-4. Example One-Directional Coverage Techniques for Butt Welds. 6-19

Figure 6-5. Example Scanning Techniques for Corner Welds. 6-20

Figure 6-6. Example Scanning Techniques for Tee Welds. 6-21

Figure 6-7. Example Reference Calibration Standard (Sensitivity). 6-22

Figure 6-8. Scanning Procedures for Welds. 6-23

Figure 6-9. Scanning Procedure for Detection of Lack of Penetration in Tee Welds. 6-24

Figure 6-10. Surface Opposite Attachment Member Not Accessible. 6-25

Figure 6-11. Surface Opposite Attachment Member Accessible. 6-25

Figure 6-12. Typical Ultrasonic Weld Inspection Record. 6-26

Figure 7-1. Recommended Probe-To-Weld Attitude for Eddy Current Standardization and Scanning Operations. 7-4

Figure A-1. Alignment of Radiation Source and Imaging Plate. A-3

LIST OF TABLES

Table Title Page

Table 3-1. Examples of Penetrameter Identification. 3-9
Table 3-2. Allowable Film-Side Penetrameters. 3-11
Table 3-3. Minimum Radiographic Quality Levels for Iridium-192 and Selenium-75 (Only Applicable to Group 1 and Higher for Selenium) Radiography of Castings and Welds In Piping, Machinery and Pressure Vessels. 3-12
Table 3-4. Number of Penetrameters and Placement for Welds. 3-14
Table 3-5. Definition of Radiographic Quality Levels. 3-16
Table 6-1. Calibration Hole Size for Longitudinal Test. 6-5
Table 6-2. Calibration Reference Notch Dimensions of Square and “U” Bottom Notch. 6-6

FOREWORD

This technical publication provides nondestructive testing method requirements for radiography, magnetic particle, liquid penetrant, ultrasonic, eddy current, and visual inspections. These requirements are designed to ensure the integrity and reliability of inspections performed. This standard does not contain acceptance criteria for the inspection methods defined.

The technical publication is organized as follows:

Chapter 1, Scope

Chapter 2, Applicable Documents

Chapter 3, Radiographic Testing

Chapter 4, Magnetic Particle Testing

Chapter 5, Liquid Penetrant Testing

Chapter 6, Ultrasonic Testing

Chapter 7, Eddy Current Testing

Chapter 8, Visual Testing

Chapter 9, Notes

Appendix A, Computed Radiography Requirements for the Detection and Measurement of Pipe Corrosion and Erosion

Appendix B, Requirements for Ultrasonic Characterization and Sizing Inspection of Embedded and Surface Connected Discontinuities

TMDER INSTRUCTIONS
Ships, training activities, supply points, depots, Naval Shipyards and Supervisors of Shipbuilding are requested to arrange for the maximum practical use and evaluation of NAVSEA and SPAWAR technical manuals (TMs). All errors, omissions, discrepancies, and suggestions for improvement to NAVSEA and SPAWAR TMs shall be submitted as a Technical Manual Deficiency/Evaluation Report (TMDER). All feedback comments shall be thoroughly investigated and originators will be advised of action resulting there from.

The NAVSEA/SPAWAR Technical Manual Deficiency/Evaluation Report form, NAVSEA 4160/1 is included at the back of the TM.

Copies of form NAVSEA 4160/1 may also be downloaded from:
https://nsdsa.nmci.navy.mil/nsdsarepository/TMDER_BLANK_REV_9-2010-1.pdf

The following methods are for generation and submission of TMDERs against unclassified TMs:

- For those with a Technical Data Management Information System (TDMIS) account, the most expedient and preferred method of TMDER generation and submission is via the TDMIS website at: https://mercury.tdmis.navy.mil.

- For those without a TDMIS account, generate and submit TMDER via the Naval Systems Data Support Activity (NSDSA) website at: https://mercury.tdmis.navy.mil/def_external/pubsearch.cfm. (TDMIS accounts may be requested at https://nsdsa.nmci.navy.mil.)

- When internet access is not available, submit TMDER via hardcopy to:

  COMMANDER
  CODE 310 TMDERs
  NAVSURFWARCENDIV NSDSA
  4363 MISSILE WAY, BLDG 1389
  PORT HUENEME, CA 93043-4307

- TMDERs against classified/restricted (includes all NOFORN) TMs must be submitted using the hardcopy method cited above.

- Urgent priority TM deficiencies shall be reported by Naval message with transmission to Port Hueneme Division, Naval Surface Warfare Center (Code 310), Port Hueneme, CA. Local message handling procedures shall be used. The message shall identify each TM deficiency by TM identification number and title. This method shall be used in those instances where a TM deficiency constitutes an urgent problem, (i.e., involves a condition, which if not corrected, could result in injury to personnel, damage to the equipment, or jeopardy to the safety or success of the mission).

Complete instructions for TMDER generation and submission are detailed on the NSDSA website at: https://nsdsa.nmci.navy.mil/tmder/tmder.asp?lvl=1.

CHAPTER 1
SCOPE

1.1 GENERAL.

This document covers the requirements for conducting nondestructive tests (NDT) used in determining the presence of surface and internal discontinuities in metals. It also contains the minimum requirements necessary to qualify NDT personnel, procedures, and equipment. This document does not contain acceptance criteria for NDT. This document does not cover all of the requirements for performing NDT in an underwater environment. Nondestructive tests in an underwater environment shall be performed as specified in NAVSEA S0600-AA-PRO-070.

1.1.1 Inspection Areas. Areas to be inspected shall be specified in the applicable drawings, specifications, contracts, or purchase orders. Drawings specifying NDT shall employ symbols in accordance with AWS A2.4.

1.1.2 Calibration. Since calibration requirements are self-contained in this document, the instruments and standards contained herein are not included in calibration programs defined by ANSI/NCSL Z540.3. This document does not exempt from calibration programs any linear measuring tools such as scales, film interpretation or Magnetic Particle/Liquid Penetrant Test overlay scales/comparators, mechanical calipers and micrometers, or other ancillary equipment and devices that provide quantitative measurement, such as light meters, pressure gages, thermometers, densitometers or ammeters.

1.1.3 Safety. This document does not claim to address all safety and health related issues, if any, concerning the use of the inspection techniques described herein. Users of this document should refer to, and comply with, all safety and health regulations as established by the manufacturer, governing local, state, and federal authorities as applicable.

1.2 CLASSIFICATION.

This document covers the following test methods:

a. Radiographic Testing (RT)

b. Magnetic Particle Testing (MT)

c. Liquid Penetrant Testing (PT)

d. Ultrasonic Testing (UT)

e. Eddy Current Testing (ET)

f. Visual Testing (VT)

1.3 ACCEPTANCE STANDARDS.

The standards for acceptance shall be as specified in the applicable drawing, specification, contract, or order.

1.4 TIME OF INSPECTION.

Acceptance inspection shall be performed on an item in the final surface condition and final heat-treated condition, except as specified in 3.3.1.2, 3.3.1.3, 3.3.1.4, or in the applicable specification.

1.5 GENERAL DEFINITIONS.

The standard terminology for NDT as described in ASTM E1316 shall apply to this document, except as noted below and in the individual sections of this document.

1.5.1 Authorized Representative of the Naval Sea Systems Command (NAVSEA). Unless otherwise specified, the Commanding Officer of a Naval Shipyard, Regional Maintenance Center, Trident Refit Facility, Ship Support Activity, Intermediate Maintenance Activity, Supervisor of Shipbuilding, or their delegated representative.

1.5.2 Government inspector. Government official who is charged with the responsibility for assuring that the materials, processes, fabrication technique, and testing personnel meet specification and contractual requirements. In this regard, he or she shall be as follows:

a. For Government shipyards: The Shipyard Commander or his delegated representative.

b. For commercial shipyards: The Supervisor of Shipbuilding or his delegated representative.

c. For other organizations: The cognizant Government inspector, his representative or the representative of another Government agency designated by or through the cognizant Government inspector.

d. For Forces Afloat: The squadron commander or his delegated representative.

e. For Naval Repair Facilities (including Regional Maintenance Centers, Trident Refit Facilities, Ship Support Activities, Intermediate Maintenance Activities): The commanding officer or his delegated representative.

1.5.3 Activity. All sites of an organization under the same quality assurance management and using the same quality assurance plan performing work to which this document is applicable.

1.5.4 Nominal Thickness. That thickness specified on plans or drawings without application of any allowed tolerance.

1.5.5 Level III NDT Examiner. The Examiner is the individual(s) to whom the activity delegates the responsibility and authority to examine and certify NDT personnel to ensure that their personnel are competent and qualified to perform the applicable inspections in conformance with contractual requirements. The administration and grading of examinations may be delegated to a representative of the Examiner and so recorded. The Examiner is the individual to whom the activity assigns the responsibility of approving NDT procedures and workmanship standards. The Examiner is equivalent to the Level III in ASNT SNT-TC-1A.

1.5.6 Level I NDT Operator. The operator is equivalent to the Level I in ASNT SNT-TC-1A.

1.5.7 Level II NDT Inspector. The inspector is equivalent to the Level II in ASNT SNT-TC-1A.

1.6 NONDESTRUCTIVE TEST PERSONNEL CERTIFICATION. Personnel performing nondestructive testing shall be certified in accordance with the activity's written practice, which shall be developed as required by ASNT SNT-TC-1A to identify the requirements necessary for the control and administration of NDT personnel training, examination and certification. ASNT SNT-TC-1A, as modified herein, shall be invoked as mandatory minimum requirements (minimum training hours, experience, examinations, etc.) and shall not be considered as recommendations or guidelines. A copy of the activity's written practice shall be provided to the Government inspector upon request.

1.6.1 Training and Experience Requirements for Initial Certification. The minimum number of training and experience hours for all candidates for certification as NDT personnel shall be in accordance with ASNT SNT-TC-1A.

1.6.1.1 Limited Certifications. The number of training hours and experience, as well as the number of test questions and extent of practical examinations for personnel who perform only one operation of a NDT method that consists of more than one operation, or perform NDT inspections of limited scope, may be less than those specified in ASNT SNT-TC-1A, provided the requirements are described in the written practice, and any limitation or restriction on the certification is described in the written practice and in certification records. However, in no case shall the number of questions be less than fifteen for the General examination and ten for the Specific examination.

1.6.2 Examiner Personnel Testing Requirements. Nondestructive test Examiner personnel shall be tested by examinations administered by the employing activity, American Society for Nondestructive Testing (ASNT), or other outside agency.

1.6.2.1 Examiner Specific Examination. A specific examination for each NDT method relating to specifications, equipment, techniques, and procedures applicable to the employer's products and methods, as well as the administration of the employers written practice, is required. It is the responsibility of the employing activity, independent of the Examiner being tested, to prepare, approve, and administer this specific examination.

1.6.3 Certification of Personnel. The employing activity is responsible for the adequacy of the NDT program and is responsible for the certification of all levels of NDT personnel.

1.6.3.1 Other Methods. For NDT methods not covered by ASNT SNT-TC-1A, personnel shall be qualified to comparable levels of competency by the administration of comparable examinations on the particular method involved.

1.6.4 Recertification. All NDT personnel shall be recertified by examinations that are as comprehensive as those employed in the initial certification, except that the basic examination for NDT Examiners need not be administered as long as a method certification is maintained. Recertification by evidence of continuing satisfactory technical performance, or on the basis of ASNT certifications granted without examination, is not permitted. Nondestructive test personnel, other than Examiners, shall be recertified at intervals not greater than three years. Examiners shall be recertified at intervals not greater than five years. A certification is considered to be expired on the last day of the month in which recertification is due.

1.6.4.1 Maintenance. NDT Operator and Inspector personnel shall be recertified by examination if they have not satisfied the annual oversight requirements of 1.6.10, in the method in which they are certified. This re-examination need only consist of an approved practical examination administered by the activity's NDT Examiner.

1.6.5 Alternate Certification. NDT Examiners and inspection personnel certified in accordance with certification programs that meet the requirements of MIL-STD-2132 or NAVSEA 250-1500-1 may perform duties and inspections in accordance with the requirements of this document for the same inspection methods/techniques provided the following:

a. Examiner:

   (1) The inspection procedure meets the requirements of this document, including the appropriate acceptance criteria; and

   (2) A specific examination is administered in accordance with 1.6.2.1; and

   (3) The ASNT SNT-TC-1A Level III education and training requirements are met.

b. Operator/Inspector:

   (1) The inspection procedure meets the requirements of this document, including the appropriate acceptance criteria; and

   (2) The individual is trained to the inspection procedure; and

   (3) A specific examination is administered that addresses the requirements of the procedure, including acceptance criteria; and

   (4) The ASNT SNT-TC-1A education and training requirements are met.

1.6.5.1 Naval Personnel. Naval (military) personnel only may be certified to the requirements of NAVSEA S9086-CH-STM-020, Chapter 074 Volume 2, as an alternative to the requirements herein.

1.6.5.2 Other Certification Programs. The use of personnel certified to specific inspection methods/techniques of other certification programs shall require NAVSEA approval.

1.6.6 Assessment. The Government inspector may request a practical or written examination be administered if there is reason to believe that an individual is unable to competently perform at the level that the individual is certified.

1.6.7 Vision Tests.

1.6.7.1 General. All NDT personnel shall be required to pass a vision test. The vision test must be current at the time of examination. Vision tests shall be conducted annually, or earlier if medical conditions that may affect vision have occurred, such as eye surgery. A vision test is considered to be expired on the last day of the month in which retesting is due. Vision testing shall be conducted by a qualified technician, using standard test methods for determining visual acuity. The standard of acceptance for vision tests shall be:

a. Natural or corrected near distance acuity such that the individual is capable of reading J1 letters on the Standard Jaeger's Test chart for near vision, or equivalent type test, at a distance of not less than 12 inches, but no more than 16 inches. This requirement must be met by one or both eyes.

b. Ability to distinguish between colors when required by the work (need only be performed for initial certification). This test may consist of the practical examination that should demonstrate the capability to distinguish and differentiate contrast among the colors used within a given test method as determined by the Examiner.

1.6.7.2 Vision Correction. The corrective aids used for vision tests must be used during certification examination and all subsequent inspections and tests performed.

1.6.8 Personnel Records. Employing activities shall maintain individual NDT personnel records, which shall be made available to the authorized representative of NAVSEA upon request. These records, as a minimum, shall include the following:

a. Records of qualification training and experience obtained prior to initial certification, which shall be maintained as long as personnel are certified.

b. Results of all current examinations that can be correlated to the examination administered and a master copy of each examination. When ASNT is used for Examiner qualification, the current ASNT certification letters applicable to each method of NDT certification may be used for the basic and method examinations.

c. Records of vision tests noting corrective aids, if used, which shall be maintained for the current and preceding certification period.

d. Certification statement with signature of the activity’s NDT Examiner for operators and inspectors (signature of employer/activity representative for Examiners).

1.6.9 NDT Certification Transfer. Transfer of NDT certifications to other activities is prohibited except as authorized by NAVSEA.

1.6.10 Oversight. Oversight of personnel who perform NDT shall be evaluated and documented by the activity's Examiner, or the Examiner's designated representative. The methodology of how this oversight is to be accomplished shall be defined in the activity's written practice.

1.6.10.1 Annual Surveillances. The activity's evaluation program shall consist of witnessing in-process inspections, conducting reinspections of previously inspected product, or conducting technical performance evaluations (TPE) in accordance with 1.6.10.2. At least one of these types of evaluations shall be accomplished and documented annually (every 12 months, by the last day of the twelfth month).

1.6.10.2 Technical Performance Evaluations. Technical performance evaluations shall be performed utilizing production hardware or test specimens containing discontinuities. At a minimum, a TPE shall be performed prior to the end of the second year of the certification cycle for personnel who perform acceptance inspections.

1.7 PROCEDURE QUALIFICATION AND APPROVAL. Nondestructive testing methods shall be performed in accordance with written procedures.

1.7.1 Development and Certification. Activities performing NDT shall develop and maintain a written procedure for each method performed and certify that each procedure is in accordance with the requirements of this document. This certification statement shall be part of each written procedure and signed by the cognizant Examiner of the activity.

1.7.2 Qualification. Each procedure shall have been qualified by proving that known discontinuities, either natural or artificial, can be reliably detected and evaluated. Discontinuities shall be representative of typical expected flaw types and shall be of a size near the threshold of acceptance/rejection. Data documenting this procedure demonstration shall be provided to the Government inspector upon request. This requirement does not apply to procedures approved under previous revisions of this document.

1.7.3 Approval. Procedures shall be approved by the cognizant Examiner of the activity and provided to the Government inspector for review upon request. The Government inspector may request demonstration of the procedure during initial review of the procedure or at any time there is reason to believe it is unable to provide adequate results.

1.7.4 Transfer. Procedures shall not be transferred from one activity to another without the specific approval of NAVSEA.

1.8 INSPECTION RECORDS.

1.8.1 General. An inspection record shall be completed for any NDT inspection required by a specification, contract, or order. The record shall include, as a minimum, the record requirements listed in the applicable inspection method section of this document, unless the controlling specification for the work that is being performed contains NDT record requirements or states that NDT records are not required. In these cases, the record requirements of the controlling specification may be followed in lieu of the requirements herein for the NDT method being performed.

1.8.2 Inspection Record Attributes that Do Not Change. Each inspection record may either contain all of the required information, or, the record can contain part of the information with the remaining attributes and parameters that do not change (i.e., the inspection procedure allows no option) included in the inspection procedure. When this allowance is utilized, an inspection record shall be completed for all items inspected, and shall as a minimum contain the inspection procedure identification, description or unique identification of the item(s) inspected, date of inspection, inspector signature, and disposition of the inspected item(s).

1.8.3 Signature. When a signature is specified herein, the signature shall be written and shall be entered on each inspection record for which the signature applies. The use of any system or process for completing inspection records that does not provide for written signatures shall require NAVSEA approval.

1.8.4 Maintenance of Inspection Records. Records shall be maintained as specified in the applicable ship specifications, fabrication specifications, and other documents invoking this document.

CHAPTER 2
APPLICABLE DOCUMENTS

2.1 GOVERNMENT DOCUMENTS.

2.1.1 Specifications, Standards, and Handbooks. The following specifications, standards, and handbooks form a part of this document to the extent specified herein. Unless otherwise specified, the issues of these documents are those cited in the solicitation or contract.

COMMERCIAL ITEM DESCRIPTIONS

A-A-59230	-	Fluid, Magnetic Particle Inspection, Suspension

DEPARTMENT OF DEFENSE SPECIFICATIONS

MIL-PRF-680	-	Degreasing Solvent

DEPARTMENT OF DEFENSE STANDARDS

MIL-STD-792	-	Identification Marking Requirements for Special Purpose Components
MIL-STD-2132	-	Nondestructive Examination Requirements for Special Applications

(Copies of these documents are available online at http://quicksearch.dla.mil/ or https://assist.dla.mil.)

2.1.2 Other Government Documents, Drawings and Publications. The following other Government documents, drawings, and publications form a part of this document to the extent specified herein. Unless otherwise specified, the issues are those cited in the solicitation or contract.

NAVAL SEA SYSTEMS COMMAND (NAVSEA)

PUBLICATIONS

S0600-AA-PRO-070	-	Underwater Ship Husbandry Manual, Chapter 7, Nondestructive Testing
S9074-AR-GIB-010/278	-	Requirements for Fabrication Welding and Inspection, and Casting Inspection and Repair for Machinery, Piping, and Pressure Vessels
S9086-CH-STM-020	-	Chapter 074 Volume 2 Nondestructive Testing of Metals – Qualification and Certification Requirements for Naval Personnel (Non Nuclear)
250-1500-1	-	Welding Standard

(Copies of these documents are available from the Naval Logistics Library, 5450 Carlisle Pike, Mechanicsburg, PA 17055 or online at https://nll.ahf.nmci.navy.mil.)

2.2 NON-GOVERNMENT PUBLICATIONS.The following documents form a part of this document to the extent specified herein. Unless otherwise specified, the issues of these documents are those cited in the solicitation or contract.

AMERICAN SOCIETY FOR NONDESTRUCTIVE TESTING, INC. (ASNT)

SNT-TC-1A	-	Recommended Practice No. SNT-TC-1A: Personnel Qualification and Certification in Nondestructive Testing

(Copies of this document are available from ASNT, P.O. Box 28518, 1711 Arlingate Lane, Columbus, OH 43228 or online at www.asnt.org.)

AMERICAN WELDING SOCIETY (AWS)

AWS A2.4	-	Standard Symbols for Welding, Brazing and Nondestructive Examination
AWS A3.0	-	Standard Welding Terms and Definitions; Including Terms for Adhesive Bonding, Brazing, Soldering, Thermal Cutting, and Thermal Spraying

(Copies of these documents are available from the American Welding Society, 550 N.W. LeJeune Road, Miami, FL 33126 or online at www.aws.org.)

ASTM INTERNATIONAL

ASTM D3699	-	Standard Specification for Kerosine
ASTM E317	-	Standard Practice for Evaluating Performance Characteristics of Ultrasonic Pulse-Echo Testing Instruments and Systems Without the Use of Electronic Measurement Instruments
ASTM E1025	-	Standard Practice for Design, Manufacture, and Material Grouping Classification of Hole Type Image Quality Indicators (IQI) Used for Radiology
ASTM E1079	-	Standard Practice for Calibration of Transmission Densitometers
ASTM E1316	-	Standard Terminology for Nondestructive Examinations
ASTM E2007	-	Standard Guide for Computed Radiography

(Copies of these documents are available from ASTM International, 100 Barr Harbor Dr., P.O. Box C700, West Conshohocken, PA 19428-2959 or online at www.astm.org.)

NCSL INTERNATIONAL

ANSI/NCSL Z540.3	-	Requirements for the Calibration of Measuring and Test Equipment

(Copies of this document are available from NCSL International, 2995 Wilderness Place, Suite 107, Boulder, CO 80301-5404 or online at http://www.ncsli.org.)

SAE INTERNATIONAL

SAE AMS 2641	-	Vehicle, Magnetic Particle Inspection, Petroleum Base
SAE AMS 2644	-	Inspection Materials, Penetrant
SAE AMS 3040	-	Magnetic Particles, Nonfluorescent, Dry Method
SAE AMS 3041	-	Magnetic Particles, Nonfluorescent, Wet Method, Oil Vehicle, Ready-to-Use
SAE AMS 3042	-	Magnetic Particles, Nonfluorescent, Wet Method, Dry Powder
SAE AMS 3043	-	Magnetic Particles, Nonfluorescent, Wet Method, Oil vehicle, Aerosol Packaged
SAE AMS 3044	-	Magnetic Particles, Fluorescent Wet Method, Dry Powder
SAE AMS 3045	-	Magnetic Particles, Fluorescent Wet Method, Oil Vehicle, Ready-to-Use
SAE AMS 3046	-	Magnetic Particles, Fluorescent Wet Method, Oil Vehicle, Aerosol Packaged
SAE AMS 3161	-	Oil, Odorless Heavy Solvent

(Copies of these documents are available from SAE World Headquarters, 400 Commonwealth Drive, Warrendale, PA 15096-0001 or online at www.sae.org.)

2.3 ORDER OF PRECEDENCE.

In the event of a conflict between the text of this document and the references cited herein, the text of this document takes precedence. Nothing in this document, however, supersedes applicable laws and regulations unless a specific exemption has been obtained.

CHAPTER 3
RADIOGRAPHIC TESTING

3.1 INTENDED USE.

The radiographic test method is primarily used for the detection of discontinuities through the volume of welds and castings in most types of material and in a variety of geometric configurations. Requirements for the use of digital computed radiography for the detection and measurement of pipe corrosion and erosion are attached as Appendix A.

3.2 DEFINITIONS.

The standard terminology for radiographic nondestructive examination as described in ASTM E1316 shall apply to this section, except as noted below.

3.2.1 Material Thickness (T_m). The material thickness (T_m) is the nominal thickness or actual thickness, if measured, of the strength member, and does not include reinforcements, backing rings or strips. The strength member is defined as the thinner of the sections being joined.

3.2.2 Maximum Effective Radiation Source Dimension. The maximum source or focal spot dimension projected on the center of the radiographic film. For example, a cylindrical isotope source whose length is greater than its diameter will have a greater effective radiation source dimension when oriented coaxially in the center of a pipe for a panoramic exposure than when the axis of the source is positioned at right angles to the pipe.

3.2.3 Multiple Film Technique. A procedure in which two or more films, of the same or different speed, are used in the same film holder and exposed simultaneously.

3.2.4 Specimen Thickness (T_s). The total thickness to be radiographed including, if present, reinforcements, backing rings, or strips. This is the thickness upon which the source-to-film distance (SFD) is based.

3.3 GENERAL REQUIREMENTS.

The radiographic method of testing is used for determining the presence of discontinuities in all ferrous and nonferrous metals. Radiographic inspection specified herein is intended to apply to all items requiring radiographic inspection in compliance with applicable specifications, drawings, contracts, or purchase orders, and one of the following shall be used:

a. X-ray machine.

b. Iridium-192.

c. Cobalt-60.

d. Selenium-75.

e. The use of other radiation sources requires specific NAVSEA approval.

3.3.1 Extent of Radiographic Inspection. All acquisition documents, drawings, or both shall specify the extent of radiographic inspection, when it is required. This information shall include the number of areas and items to be radiographed, the point in fabrication when radiography shall be performed, the quality level of inspection, and the acceptance standard to be applied.

3.3.1.1 Radiographic Shooting Sketch (RSS) for Castings. The casting designer shall select and identify, in accordance with AWS A2.4, areas requiring radiography on the engineering drawing. The contractor or activity performing the inspection shall prepare the RSS which shows film placements and radiation directions to assure adequate radiographic coverage as specified by the engineering drawing. The RSS shall be validated by a signature of a certified radiographic inspector. The requirements of 3.4.14 herein provide specific detailed requirements that shall be contained on the RSS.

3.3.1.2 Inspection of Heat-Treated Items. Radiographic inspection may be performed at the following times:

a. Before or after stress relief.

b. Before or after heat treatment where the heat treatment does not require quenching of the item in a liquid medium.

3.3.1.3 Inspection of Machined Items. Castings or forgings may be radiographed in the as-cast, as-forged, or rough machined conditions, provided the requirements of 3.5.4.2 are met.

3.3.1.4 Inspection of Weldments. Weldments that require contouring or machining may be radiographed in the as-welded condition provided the surface condition does not interfere with the interpretation of the radiographs and the penetrameter selection is based on the requirements of 3.5.4.

3.3.2 Radiographic Procedure. Radiographic inspection procedures shall contain as a minimum, the following elements.

3.3.2.1 Minimum Radiographic Procedure Requirements.

a. X-ray machine information.
   (1) Model and type.
   (2) Manufacturer.
   (3) Focal spot size.
   (4) Voltage rating.
b. Isotope source information.
   (1) Type of isotope.
   (2) Source dimensions (maximum).
c. Film processing methods.
d. Film type.
e. Viewing facilities.
f. Film density requirements including density-measuring equipment used.
g. Method of providing film identification as specified in 3.4.8.
h. The requirements of this document that apply.

3.4 RADIOGRAPHY REQUIREMENTS.

3.4.1 Direction of Radiation. Unless otherwise specified, the direction of the central beam of radiation shall be as nearly central to the area being examined and perpendicular to the surface of the film as possible.

3.4.2 Screens and Filters. All radiographs produced with radioisotopes or a source of 150 kV or greater shall employ a front and back lead screen in contact with the film. Intensifying screens and filters shall be as follows:

a. Intensifying screens: For radiation energies up to 300 kV (inclusive), either lead oxide or lead foil intensifying screens may be used. For energies above 300 kV, only lead foil screens may be used. Intimate contact between the screens and the films should be maintained during exposure.

b. Front filters: When using radiation sources with energies of 0.7 MeV or greater (including Cobalt-60), a lead filter with a thickness of not less than 0.010 inch shall be placed between the specimen and the film. The filter may be located either in the film holder and may be combined with the intensifying screen, or may be located in front of the film holder. However, if the filter is located in front of the film holder, the screens shall be placed in contact with the film, as in (a) above.

c. Back filters: Lead filters shall be used behind the film holder to prevent scattered radiation from the floor, walls, air, or other surrounding objects from fogging the film. Each holder shall have a lead letter “B” not less than ½ inch high and not less than 1⁄16 inch thick positioned behind the film and within the area of film to be read. When performing panoramic exposures, one lead letter “B” may be placed in each quadrant. The lead letter “B” is not required for radiography of circumferential welds with an inside diameter less than ¾ inch which are performed by the single wall exposure technique. If the image of the letter “B” shows a light image on a darker background, the radiograph shall be rejected. A darker image of the letter “B” on a lighter background is not cause for rejection provided the darker image does not interfere with the film evaluation.

d. Masking: Masking may be used for control of scattered radiation provided the area being viewed for acceptance is masked to the same degree as the penetrameter.

3.4.3 Film. Radiographs shall be made on fine grain, extra-fine grain, or ultra-fine grain, safety base film. High-speed, medium or coarse grain films shall be used only when authorized by NAVSEA or its authorized representative.

3.4.3.1 Film Quality. Radiographs presented for interpretation shall be free from blemishes or film artifacts that might mask or be confused with defects in the material being examined. If doubt exists concerning the true nature of an indication on the film, the radiograph shall be rejected. Typical blemishes are as follows:

a. Fogging caused by light leaks in the processing room or cassettes, defective safelights, exposure marks caused by improper processing, or old film.

b. Mechanical processing defects such as streaking, air bells, water marks, or chemical stains.

c. Blemishes caused by dirt in cassettes, particularly between intensifying screens and the film.

d. Pressure or lead marks, scratches, gouges, finger marks, crimp marks, or static electricity marks.

e. Loss of detail caused by poor film-to-screen contact in localized areas.

3.4.3.2 Film Density. The density shall be 1.5 to 4.0 for single film viewing and 2.0 to 4.0 for superimposed film viewing in the area being examined for acceptance. For castings and forgings, the density shall be 1.5 to 4.0 in the area being examined for acceptance for both the single and superimposed film viewing. When the thickness of the part varies considerably in the area under examination, two or more films, either of equal or of different speeds, may be exposed simultaneously in the same film holder and the resultant radiograph submitted for interpretation either as single or superimposed film, whichever is better suited for the interpretation of any small portion of the area covered by the exposure. For the small portion of the area under immediate examination, the density of either the single or the superimposed film shall be in accordance with the aforementioned requirements.

3.4.3.3 Multiple Film Techniques. Film techniques with two or more films of the same or different speeds in the same film holder shall be permitted provided the applicable radiographic quality level for a specific area is demonstrated.

3.4.4 Filmless Techniques. Requirements for the use of digital computed radiography for the detection and measurement of pipe corrosion and erosion are attached as Appendix A. For any other application, the use of filmless techniques shall be limited to in-process inspection and shall not be permitted for final acceptance inspection unless specifically approved by NAVSEA.

3.4.5 Radiation Sources. Recommended X-ray machine voltage settings and gamma-ray sources to be used with various specimen thicknesses are shown on figure 3-1, figure 3-2, and figure 3-3. Other voltage settings or sources may be used provided the required quality levels are maintained. Cobalt-60 sources shall not be used on welds with a specimen thickness (T_s) less than 2.5 inches or on any material with a nominal thickness less than 1 inch. Cobalt-60 may be used on casting repair welds where the specimen thickness is greater than or equal to 1 inch.

3.4.6 Source-To-Film Distance.

3.4.6.1 Calculations. The source-to-film distance SFD shall be such that the geometric unsharpness (U_g) values of figure 3-4 are not exceeded. Source-to-film distance shall be calculated as follows:

$$SFD = t + \frac{Ft}{U_g}$$

Where:

U_g = Geometric unsharpness in inches.

F = Maximum effective radiation source dimension in inches (see 3.2.2).

t = Specimen thickness T_s in inches.

SFD = Distance, in inches, between radiation source and film.

3.4.6.2 Film-Specimen Contact. When the film cannot be placed in intimate contact with the specimen, and a gap exists between the specimen and the film, the minimum SFD (as calculated per 3.4.6.1) shall be multiplied by the ratio of:

$$\frac{t + gap}{t}$$

3.4.6.3 Reduced Source-To-Film Distance. When accessibility does not permit compliance with the above, a shorter source-to-film distance is allowed provided the following conditions are met:

a. The required quality level is obtained.

b. The greatest possible source-to-film distance is used.

c. The radiographic record shows what accessibility conditions limited the source-to-film distance and indicates the actual source-to-film distance used.

3.4.7 Radiographic Location Markers. The images of the location markers for the coordination of the part with the film shall appear on the film without interfering with the interpretation and with such an arrangement that it is evident that complete coverage was obtained. These marker positions shall be marked on the part and the position of the markers shall be maintained on the part during radiography. When using a technique in which radiation passes through two walls and the welds in both walls are viewed for acceptance and the entire image of the object being radiographed is shown on the radiograph, only one location marker is required on the base metal at the center of the area being examined. Markings shall be in accordance with MIL-STD-792.

3.4.8 Film Identification. A system of positive identification of the film shall be used and each film shall have a unique identification relating it to the item being inspected. As a minimum, the following additional information shall appear on each radiograph or in the records accompanying each radiograph:

a. Identification of the organization making the radiograph.

b. Date of exposure.

c. Identification of the part, component, or system and, where applicable, the weld joint in the part, component, or system.

d. Whether the radiograph is of the original area or a repair area.

3.4.9 Maintenance of Radiographic Records. Radiographic records shall be maintained as specified in 1.8.4.

3.4.10 Darkroom Facilities. Darkroom facilities, including equipment and materials, shall be capable of producing uniform, blemish-free radiographs.

3.4.11 Film Viewing Facilities. A subdued level of background lighting shall be maintained in film viewing facilities to prevent reflection on the radiographic film that interferes with interpretation.

3.4.11.1 Film Viewing Equipment. Equipment used for radiographic interpretation shall provide the following minimum features:

a. A light source of sufficient intensity controlled to allow the selection of optimum intensities for viewing film densities specified in 3.4.3.2. The required intensity range may be provided by the use of a separate high intensity viewing port. The light enclosure shall be so designed to provide a uniform level of illumination over the entire viewing surface.

b. A suitable fan, blower, or other cooling device to provide stable temperature at the viewing port such that film emulsions shall not be damaged during l minute of continuous contact with the viewing surface.

c. An opal glass front in each viewing port, except for high intensity viewers used for high density film.

d. A set of opaque masks to suit the sizes of radiographs to be viewed, or equivalent.

e. A densitometer meeting the requirements of ASTM E1079 shall be provided for assuring conformance with film density requirements. The densitometer aperture size shall not be greater than 2 millimeters in diameter.

3.4.12 Surface Preparation of Components and Welds Prior to Radiography. Metal components shall be free of scale, surface slag, adhering or imbedded sand, or other surface conditions that may interfere with proper interpretation of radiographs. With the exception of undercuts at the toe of the weld that are within specification allowances, the contour of welds shall blend smoothly and gradually into the base metal. Excessive weld ripples or weld surface irregularities shall be removed by any suitable mechanical process to such a degree that the resulting radiographic contrast due to any irregularity cannot mask or be confused with the image of a defect.

3.4.13 Safety. Radiographic tests shall be performed under protected conditions such that personnel shall not receive a whole-body radiation dosage exceeding the maximum permitted by city, state, or national codes.

3.4.14 Interpretation of Radiographs. To aid in the proper interpretation of radiographs, a sketch, drawing, written procedure, or equivalent record shall be prepared to show the setup used to make each radiograph. The information shall accompany each radiograph (or a group of radiographs if the same information applies). Reference to a standard setup is acceptable if descriptions of this standard setup are made available. The information shall include:

a. Number of films and film type.

b. Location of each film on the radiographed item.

c. Orientation of location markers.

d. Location of radiation source, including source-to-film distance and approximate angle of beam.

e. The kilovoltage and focal spot size (for X-ray machines).

f. The isotope type, intensity (in curies), and physical dimensions.

g. Type of material, and material thickness.

h. Shim or block material, and thickness.

i. Type of weld joint, for example, butt with backing ring.

j. Whether original or repair.

k. Part and drawing number.

l. Material groups, penetrameter sizes and types (MIL-type or ASTM-type) and the required quality level.

m. Source-side or film-side penetrameter.

n. Single-wall or double-wall viewing.

o. Type and thickness of intensifying screens and filters.

p. Location of lead letter “B”.

q. Applicable acceptance standards.

r. Signature of the radiographic operator.

s. Approved procedure identification.

3.4.15 Radiographic Records. Radiographic records (see 1.8) shall contain the following:

a. The information specified in 3.4.14.

b. Notation of acceptable and rejectable discontinuities. Any questionable discontinuity in the area of interest that is due to a surface condition shall be visually verified and noted.

c. Date of interpretation.

d. Disposition (accept/reject) of the item radiographed.

e. Signature of the radiographic inspector.

3.4.16 Availability of Radiographs. Radiographs and records shall be made available to the Government inspector upon request.

3.5 PENETRAMETERS.

Penetrameters shall be employed for all radiographs, except as specified in 3.5.5.4, and the penetrameter image will be employed to determine the radiographic quality level. Either MIL-type penetrameters (as defined in the following paragraphs), or ASTM-type penetrameters (as defined in ASTM E1025) may be used. None of the requirements of this document that apply to physical size, marking, etc. of penetrameters shall be interpreted as applying to ASTM-type penetrameters. The film density of the penetrameter image shall not be greater than 15 percent more than the film density of the area of interest. It may be less dense than the film density of the area of interest. The film density of the penetrameter shall be measured directly over the penetrameter hole used to obtain the required sensitivity.

3.5.1 Penetrameter Material. Material grouping for penetrameter material shall be as shown below. Penetrameters shall be of the same group number as the base material of the item being radiographed. Penetrameters of a lower group number (Group 03 is lowest) may be used for any material group of a higher number provided the applicable quality level is maintained. For material not listed, the penetrameter material shall be as specified in 3.5.1.2.

Material, Group 03	Penetrameters, Group 03
Magnesium	Magnesium
Material, Group 02	**Penetrameters, Group 02**
Aluminum	Aluminum
Material, Group 01	**Penetrameters, Group 01**
Titanium	Titanium
Material, Group 1	**Penetrameters, Group 1**
Carbon steel Alloy steel Stainless steel Manganese-nickel-aluminum bronze	Penetrameters made of any of these materials may be used interchangeably.
Material, Group 2	**Penetrameters, Group 2**
Aluminum bronze Nickel-aluminum-bronze	Penetrameters made of any of these materials may be used interchangeably.
Material, Group 3	**Penetrameters, Group 3**
Nickel-chromium-iron alloy	Nickel-chromium-iron alloy
Material, Group 4	**Penetrameters, Group 4**
Nickel-copper alloys Copper-nickel alloys	Penetrameters made of any of these materials may be used interchangeably.
Material, Group 5	**Penetrameters, Group 5**
Tin bronze Gun metals Valve bronze	Penetrameters made of any of these materials may be used interchangeably.

3.5.1.1 Dissimilar Metal Welds.

3.5.1.1.1 Dissimilar Metal Welds of Same Group. For welds made between dissimilar metals in any one group, the penetrameters for that group or penetrameters of a lower group number shall be used, provided the quality level as applicable is maintained.

3.5.1.1.2 Dissimilar Metal Welds of Different Groups. For welds made between dissimilar metals not of the same materials group, two penetrameters shall be used, one on each side of the weld, of the material group (or lower group) corresponding to the base material upon which it is placed. The use of a single penetrameter is allowed, provided that the lower group number penetrameter is placed on the higher group number material, and the applicable quality level is obtained.

3.5.1.2 Other Metals. For radiography of materials not herein covered, penetrameters of the same material may be used, or penetrameters of any other material may be used if the following requirements are met. Two blocks of equal thickness, one of the material to be radiographed and one of the material of which the penetrameters are made, shall be radiographed on the same film by one exposure at the lowest energy level to be used for the production radiographs. Densitometer readings for both materials shall be read from the film and shall be between 2.0 and 4.0 density for both materials. If the film density for the material to be radiographed is within plus 15 percent or less than the film density for the penetrameter material, the penetrameter material may be used for radiography of the production material.

3.5.2 Penetrameter Dimensions. The dimensions of MIL-type penetrameters shall conform to those shown on figure 3-5.

3.5.3 Penetrameter Identification. MIL-type penetrameters shall be identified with lead numbers or engraved lead strips indicating the material thickness (T_m or T_s as applicable) to which the penetrameter applies as specified in table 3-1. Examples of corresponding identification numbers for ASTM-type penetrameters are also shown for reference.

a. MIL-type rectangular penetrameters shall be identified with lead numbers attached to the penetrameters, as shown on figure 3-5.

b. For MIL-type penetrameters, the lead numbers shall indicate the material thickness in hundredths of an inch up to l inch, and in inches to the nearest tenth of an inch over l inch.

c. Each MIL-type penetrameter shall be further identified by permanently marking its metal or principal alloy composition into the surface of the penetrameter, and by notches in accordance with figure 3-6.

3.5.3.1 Lead Number Placement for Circular Penetrameters. Lead numbers shall be placed adjacent to the circular penetrameters to provide identification of the penetrameter on the film.

3.5.3.2 Identification for Special Quality Levels. For the special quality levels of 1-1T and 1-2T, the applicable penetrameter size shall be based on one-half of the material thickness. For the special quality level of 4-2T, the applicable penetrameter size shall be based on twice the material thickness.

3.5.4 Penetrameter Selection.

3.5.4.1 Welds. Penetrameter selection shall be based on material thickness (T_m) as defined in 3.2.1 for piping, machinery, and pressure vessel welds, and on T_s as defined in 3.2.4 for structural welds. For double-wall viewing (see 3.8.2.2), the penetrameter shall be based on $2T_m$ or $2T_s$ as appropriate.

Table 3-1. Examples of Penetrameter Identification.

MIL-Type Penetrameter Identification Number [2/]	Penetrameter Thickness (Inches)	Material Thickness [1/] (Inches)	ASTM-Type Penetrameter Identification Number [2/]
25	0.005	0.25	5
50	0.010	0.50	10
75	0.015	0.75	15
1.0	0.020	1.0	20
1.5	0.030	1.5	30
2.0	0.040	2.0	40
3.0	0.060	3.0	60
5.5	0.110	5.5	110
9.0	0.180	9.0	180
10.0	0.200	10.0	200

NOTES:

[1/] The 0.005-inch thick penetrameter shall be used for material thickness less than 0.25 inch unless otherwise specified in the applicable specification or purchase order.

[2/] For 2 percent sensitivity.

3.5.4.2 Castings and Forgings. Castings or forgings may be radiographed in the as-cast, as-forged, or rough machined condition provided the surface condition does not mask rejectable defects and the following requirements for penetrameter selection are met:

a. Structural castings and forgings: The penetrameter shall be based on the actual or nominal thickness of the material being radiographed (T_s as defined in 3.2.4). For single-wall viewing, the penetrameter shall be based on T_s. For double-wall viewing, the penetrameter shall be based on $2T_s$.

b. Other castings and forgings: The penetrameter thickness shall be based on the actual or nominal thickness of the material being radiographed (T_s as defined in 3.2.4). For single-wall viewing, the penetrameter shall be based on T_s. For double-wall viewing, the penetrameter shall be based on $2T_s$. However, if the thickness to be radiographed exceeds the nominal thickness of the finished piece, the penetrameter size shall be based on a thickness which is not greater than 20 percent more than the nominal thickness of the finished piece, or ¼ inch, whichever is greater. The penetrameter size shall not be based on a thickness greater than the actual thickness to be radiographed. For areas in castings that have been end-prepared for welding, the penetrameter shall be selected based on the actual or nominal thickness of the area adjacent to, but exclusive of, the weld end-preparation.

c. Any exceptions to the foregoing shall be designated on the drawings or shooting sketches and shall require specific approval of the authorized representative of NAVSEA.

d. Techniques specified in 3.5.5 are allowed as long as the requirements of this section are met.

3.5.5 Number, Location, and Placement of Penetrameters.

3.5.5.1 Penetrameter Location. The penetrameter shall be placed on the source side of the section being examined (see figures 3-7, 3-8, 3-9, 3-10, and 3-11). In the inspection of irregular objects, the penetrameter shall be placed on the part of the object farthest from the film. When performing double-wall radiography, the penetrameter shall be placed on the surface of the wall or walls being evaluated nearest the source of radiation (see figure 3-12). Where this is not practicable, the film side technique specified in 3.5.5.1.1, 3.5.5.1.2, the separate block technique of 3.5.5.1.3, or the technique shot approach of 3.5.5.4, as appropriate, may be employed.

3.5.5.1.1 Film-Side Penetrameter Technique (Double-Wall Exposure). The film-side penetrameter placement technique shall be as shown on figure 3-13. The radiographic technique shall be demonstrated in a similar section with the applicable penetrameter placed on the source side of the wall for which radiography is desired, and a series of penetrameters, ranging in thickness from that of the penetrameter required on the source side to one-fourth that thickness, shall be placed on the film side. If the proper penetrameter on the source side indicates the required quality level, the image of the smallest hole in the thinnest penetrameter clearly visible on the film side shall be used to determine the penetrameter and the penetrameter hole to be applied in evaluating production radiographs. Technique radiographs shall be made available for review upon request by the Government inspector. Table 3-2 contains a list of film side penetrameters that may be used in lieu of performing technique radiography and selection of penetrameters as described above.

3.5.5.1.2 Film-Side Penetrameter Technique (Single-Wall Exposure). For large diameter pipe (8-inch and over) where the diameters are such that the source may be placed inside the pipe for simultaneous single-wall radiography of welds but source-side penetrameter placement is not feasible, a film-side penetrameter technique may be employed provided the requirements of 3.4.6 and the radiographic quality level of the source-side penetrameter being 2-2T as required by 3.7 are met. When using an Iridium-192 or Selenium-75 (only applicable to Group 1 and higher for Selenium) source, the required source-side penetrameter may be selected from table 3-3 for the applicable wall thickness for single-wall viewing technique, or 2-4T for welds less than ¾ inch thick, whichever is less restrictive, and the film-side penetrameter selected from table 3-2. For castings and forgings, see note 2 in table 3-4.

3.5.5.1.3 Separate Block Penetrameter Technique. The penetrameter may be positioned on a block of the same or a lower group number material placed as close as possible to the area being radiographed. The block shall be of thickness equal to or greater than the thickness of the item being radiographed and, in piping 1-inch nominal pipe size and larger, shall be positioned so that the penetrameter is at the same distance from the film as it would be if placed on the source side of the item being radiographed.

3.5.5.2 Requirements for Castings and Forgings. One penetrameter shall represent an area within which radiographic densities do not vary more than plus 30 percent to minus 15 percent from the density measured as specified in 3.5. Not less than one penetrameter per radiograph shall be used except as specified in 3.5.5.4. If a shim is used, it shall be of the same or lower group number as the item being radiographed. When the film density varies by more than minus 15 to plus 30 percent, two penetrameters used as follows will be satisfactory. If one penetrameter shows an acceptable sensitivity at the most dense portion of the radiograph, and the second penetrameter shows an acceptable sensitivity at the least dense portion of the radiograph, these two penetrameters shall serve to qualify the radiograph within the density limits. For components where there are changes in wall thickness and wall alignment, and the use of two penetrameters is not practicable, the use of one penetrameter is approved. The required penetrameter density tolerance need not be met; however, the density in areas of interest shall be between 1.5 and 4.0. Where only one penetrameter is used, the penetrameter size shall be based on the thinnest wall being radiographed and shall be placed on the thickest wall section. For castings and forgings, see note 2 of table 3-4.

Table 3-2. Allowable Film-Side Penetrameters. [1/]

Required Source-Side Penetrameter		Allowed Film-Side Penetrameter		Required Source-Side Penetrameter		Allowed Film-Side Penetrameter	
Size	Sensitivity	Size	Sensitivity	Size	Sensitivity	Size	Sensitivity
25	2T	25	2T	70	4T	65	4T
30	2T	25	4T	75	2T	70	2T
35	2T	30	4T	80	2T	75	2T
40	2T	35	4T	85	2T	80	2T
45	2T	40	4T	90	2T	85	2T
50	2T	45	2T	95	2T	90	2T
50	4T	45	4T	1.0	2T	95	2T
55	2T	50	2T	1.2	2T	1.0	2T
55	4T	50	4T	1.5	2T	1.0	2T
60	2T	55	2T	1.7	2T	1.0	2T
60	4T	55	4T	2.0	2T	1.0	2T
65	2T	60	2T	2.2	2T	1.2	2T
65	4T	60	4T	2.5	2T	1.2	2T
70	2T	65	2T	2.7	2T	1.5	2T

NOTE:

[1/] Only MIL-type penetrameter sizes are shown. If ASTM-type penetrameters are used, substitute the corresponding ASTM penetrameter size.

3.5.5.3 Requirements for Welds. The number and placement of penetrameters for specific configurations shall be as specified in table 3-4 and the following.

3.5.5.3.1 Penetrameter Image Position. The image of the penetrameter or the shim on which the penetrameter is placed shall not be superimposed on the weld in the area being evaluated.

3.5.5.3.2 Penetrameter Image Location. Where possible, the image of the penetrameter shall not be greater than 1¼ inches from the edge of the weld as shown on the radiograph.

3.5.5.3.3 Penetrameters on Weld. Penetrameters may be placed on the weld outside the area to be read for acceptance.

Table 3-3. Minimum Radiographic Quality Levels for Iridium-192 and Selenium-75 (Only Applicable to Group 1 and Higher for Selenium) Radiography of Castings and Welds In Piping, Machinery and Pressure Vessels.

Actual or Nominal Single Wall Thickness (Inches)	Type of Exposure and Viewing Technique	Source-Side Penetrameter Number [1/]	Nominal Penetrameter Thickness (Inches)	Minimum Perceptible Hole	Nominal Diameter of Penetrameter Hole (Inches)
Up to 0.199	Double-wall exposure	50	0.010	4T	0.040
0.200 – 0.235		55	0.011	4T	0.044
0.236 – 0.275		60	0.012	4T	0.048
0.276 – 0.298		65	0.013	2T	0.026
0.299 – 0.321		70	0.014	2T	0.028
0.322 – 0.343		75	0.015	2T	0.030
0.344 – 0.359	Double-wall viewing	80	0.016	2T	0.032
0.360 – 0.375		85	0.017	2T	0.034
0.376 – 0.432		90	0.018	2T	0.036
0.433 – 0.489		95	0.019	2T	0.038
0.490 – 0.547		1.0	0.020	2T	0.040
Up to 0.500	Single-wall viewing (Single- or double-wall exposure)	50	0.010	4T	0.040
0.501 – 0.555		55	0.011	4T	0.044
0.556 – 0.600		60	0.012	4T	0.048
0.601 – 0.642		65	0.013	2T	0.026
0.643 – 0.684		70	0.014	2T	0.028
0.685 – 0.725		75	0.015	2T	0.030
0.726 – 0.816		80	0.016	2T	0.032
0.817 – 0.906		85	0.017	2T	0.034

NOTE:

[1/] This penetrameter is to be used for both insert and backing ring joints regardless of the amount of reinforcement or thickness of backing ring. Only MIL-type penetrameter sizes are shown. If ASTM-type penetrameters are used, substitute the corresponding ASTM penetrameter size.

3.5.5.3.4 Penetrameter Orientation. Penetrameters may be placed with the long axis either parallel or perpendicular to the length of the weld.

3.5.5.3.5 Obstructions. When part geometry or access will not permit placement of the penetrameter at one or both extremities, the penetrameter shall be placed within 1 inch of the obstruction. A lead source-side marker shall be placed on the adjacent base material at the extremity of the area to be viewed for acceptance. If access to adjacent base material is restricted, the marker shall be placed on the weld. If the extremity of the area of interest is obvious on the radiograph (that is, the end of a plate, a weld intersection, and so forth), the additional marker is not required.

3.5.5.3.6 Tapered and Fillet Welds. Tapered and fillet-type welds shall have a minimum of two penetrameters representing the minimum and maximum weld thickness (see figures 3-14 and 3-15). However, one penetrameter may be used for small differences in thickness, provided the penetrameter size is based on the thinner section and it is placed on the thicker weld section and the film density of the penetrameter image is not greater than 15 percent more than the lightest film density in the area of interest.

3.5.5.4 Radiography of Parts. Penetrameters are not required on each film when placement of the penetrameter on the part would obscure part or all of the area of interest, and where it would not be practicable to place the penetrameter on a block adjacent to the part, as specified in 3.5.5.1.3. However, an initial technique shot with the applicable penetrameter on the part shall demonstrate the specified sensitivity, and subsequent exposure without a penetrameter shall be made only if exposed in the same manner as the technique shot. Whenever the setup is changed, and at intervals not greater than once each work shift, additional technique shots shall be made in proper sequence to assure that the process is being properly controlled. The technique shots shall accompany the subsequently exposed film. If multiple parts or components are exposed simultaneously, at least one penetrameter shall be required on each film plus additional penetrameters as required by table 3-4.

3.6 SHIMS.

When it is necessary to compensate for a difference in material thickness between the area of interest and the area where the penetrameter is located, a shim of material which is of the same or a lower group number shall be placed under the penetrameter to ensure that the density requirements of 3.5 are met. The shim image shall extend beyond the penetrameter image on at least one side; for pipe less than 1-inch nominal pipe size the end of the penetrameter and shim nearest the weld needs to be discernible on the radiograph. All other penetrameter features required by the applicable quality level shall be visible. The image of the shim shall not overlap the image of the weld or backing strip or ring.

Table 3-4. Number of Penetrameters and Placement for Welds.

Weld Configuration [2/]	Inspected Weld Length (Inches)	Penetrameters	
		Minimum Number	Placement [1/]
Welds in curved surfaces less than 24 inches in diameter.	5 and less	1	At the center of the area of interest.
	Greater than 5	2	One at the extremity and one at the center of the area of interest, or one at each extremity of the area of interest.
Welds in flat surfaces and curved surfaces 24 inches and greater in diameter (includes longitudinal welds in pipes and pressure vessels).	Less than 10	1	At the center of the area of interest.
	10 up to and including 17	2	One placed at each extremity of the area of interest.
	Greater than 17	3	One placed at each extremity and one at the center of the area of interest.
Essentially circular (non cylindrical welds on one film)	Unlimited	2	Approximately 180 degrees apart at the extremity of the area being inspected.
Cylindrical welds radiographed simultaneously using a series of films or a single length of roll film (panoramic exposure).	Unlimited	4	One in each quadrant.
Repairs in cylindrical welds initially radiographed using panoramic exposure technique.	Unlimited	1	One in each affected quadrant, provided the technique used is the same as the initial radiograph.

NOTES:

[1/] Penetrameter placement specified for longer inspected weld lengths may be used for shorter weld lengths within each weld configuration.

[2/] This table may be utilized for radiography of comparable cast and forged shapes as those listed under the "Weld Configuration" column.

3.7 RADIOGRAPHIC QUALITY LEVELS.

Unless otherwise specified in the applicable specification, contract, or drawing, the radiographic quality level shall be 2-2T, except as noted in 3.7.1 and 3.7.2. Penetrameter identification, definition of radiographic quality level, and design are specified in table 3-1, table 3-5, and figures 3-5 and 3-6, respectively.

a. Standard radiographic quality level.

(1) 2-2T: This requires that a penetrameter whose thickness (T) is no greater than 2 percent (1/50) of the material thickness of the item being radiographed and a hole drilled through the penetrameter with a diameter equal to twice the thickness of the penetrameter (2T) shall be visible.

b. Special radiographic quality levels.

(1) Quality level 1-1T radiography: The 1T hole in a penetrameter whose thickness (T) is no greater than 1 percent (1/100) of the material thickness shall be visible.

(2) Quality level 2-1T radiography: The 1T hole in a penetrameter whose thickness (T) is no greater than 2 percent (1/50) of the material thickness shall be visible.

(3) Quality level 1-2T radiography: The 2T hole in a penetrameter whose thickness (T) is no greater than 1 percent (1/100) of the material thickness shall be visible.

(4) Quality level 2-4T radiography: The 4T hole in a penetrameter whose thickness (T) is no greater than 2 percent (1/50) of the material thickness shall be visible.

(5) Quality level 4-2T radiography: The 2T hole in a penetrameter whose thickness (T) is no greater than 4 percent (1/25) of the material thickness shall be visible.

3.7.1 X-ray Radiography. For welds under the following conditions, a 2-4T quality level is acceptable:

a. For butt welds with permanent backing, where the material thickness T_m is less than ½ inch.

b. For penetration and connection welds (figures 3-14 and 3-15) where the T_{m1} thickness is less than 2 inches.

3.7.2 Radioisotope Radiography. When radioisotopes are used, the quality level and selection of penetrameter shall, as a minimum, be in accordance with table 3-3. For welds and components not specified in table 3-3 (e.g., structural welds), the 2-4T quality level is acceptable under the following conditions:

a. Penetration and connection welds (figures 3-14 and 3-15) when the T_{m1} thickness is less than 2 inches (applicable to all isotopes).

b. Components and welds, other than above, when the T_m is not greater than ¾ inch (only applicable to Iridium-192 and Group 1 and higher for Selenium-75).

3.8 SINGLE-WALL AND DOUBLE-WALL RADIOGRAPHY.

3.8.1 Single-Wall Radiography. Radiographs shall be made through single wall whenever practical. Shims under the penetrameter shall be as specified in 3.6. For cylindrical welds in piping, double-wall radiography is permitted as specified below.

3.8.2 Double-Wall Radiography.

3.8.2.1 Double-Wall Exposure/Single-Wall Viewing. For welds in pipe greater than 3½ inches nominal pipe size, only the weld closest to the film shall be viewed for acceptance. The source shall be positioned in such a location that the source-side weld image does not obscure the image of the film-side weld. Shims under the penetrameter shall be provided in accordance with 3.6. The minimum source-to-film distance shall be calculated based on the T_s value illustrated on figure 3-13 and 3.4.6.

3.8.2.2 Double-Wall Exposure/Double-Wall Viewing. Welds in pipe or tube 3½ inches or less nominal pipe size may be radiographed using a technique in which the radiation passes through two walls and the weld in both walls is viewed for acceptance on the same film. The radiation beam may be offset from the plane of the weld at an angle sufficient to separate the images of source-side and film-side portions of the weld. Shims under the penetrameter shall be provided in accordance with 3.6. The minimum source-to-film distance shall be calculated using the outside diameter of the pipe or section as the specimen thickness T_s (see figure 3-12 and 3.4.6).

Table 3-5. Definition of Radiographic Quality Levels.

Radiographic Quality Level	Max Penetrameter Thickness 1/ (Percent)	Min Perceptible Hole Diameter 2/	Equivalent Penetrameter Sensitivity 3/ (Percent)
1-1T	1	1T	0.7
1-2T	1	2T	1.0
2-1T	2	1T	1.4
2-2T	2	2T	2.0
2-4T	2	4T	2.8
4-2T	4	2T	4.0

NOTES:

1/ Expressed as a percentage of the material thickness.

2/ Expressed as a multiple of thickness of penetrameter (T).

3/ Equivalent penetrameter sensitivity is that thickness of the penetrameter, expressed as a percentage of the material thickness, in which a 2T hole would be visible under the radiographic conditions.

3.9 RADIOGRAPHY OF REPAIR WELDS.

When weld repairs are made to castings and forgings, to remove defects revealed by radiography, the original radiographs of the previously defective areas shall be submitted for review with the final acceptance radiographs. For those items where radiography is required for the repair, a sketch showing the location, size, and shape of the repair weld shall accompany the radiograph. Penetrameters, location markers, or film identification shall not be placed in the weld repair areas being inspected.

3.10 RADIOGRAPHY OF CASTINGS AND FORGINGS.

Whenever possible a single-wall technique shall be used; however, for casting and forging areas with nominal internal dimensions 4 inches or less a double-wall technique may be used. The minimum source-to-film distance shall be calculated using the outside diameter of the item radiographed as specimen thickness T_s.

3.11 RADIOGRAPHIC FILM OWNERSHIP.

Unless otherwise specified, radiographic film and the associated inspection records of an item shall become the property of the purchaser of the item. Maintenance of radiographic records shall be as specified in 1.8.4.

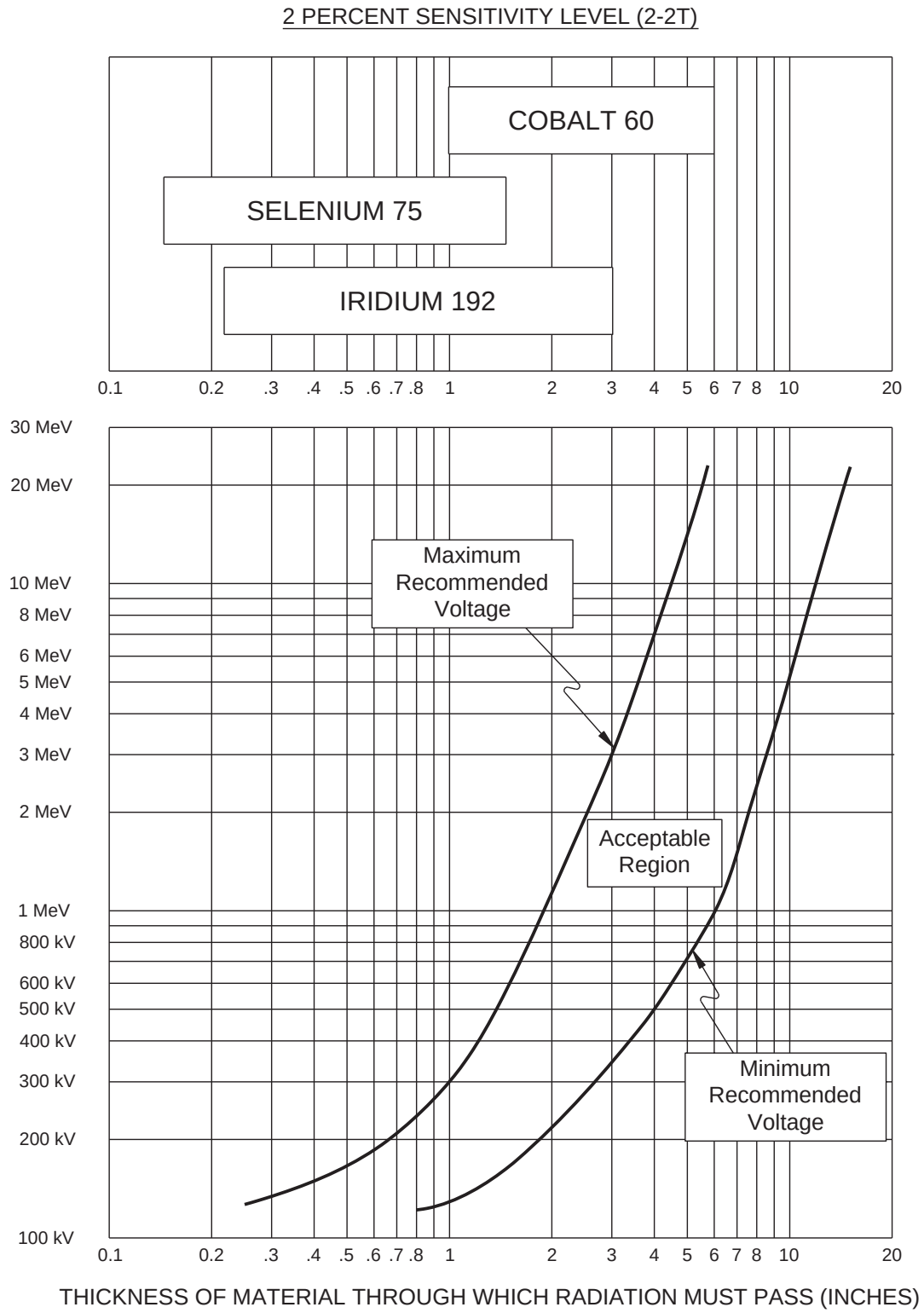

Figure 3-1. Recommended X-ray Voltage Settings and Radioisotope Sources to Be Used with Various Steel and Similar Alloys.

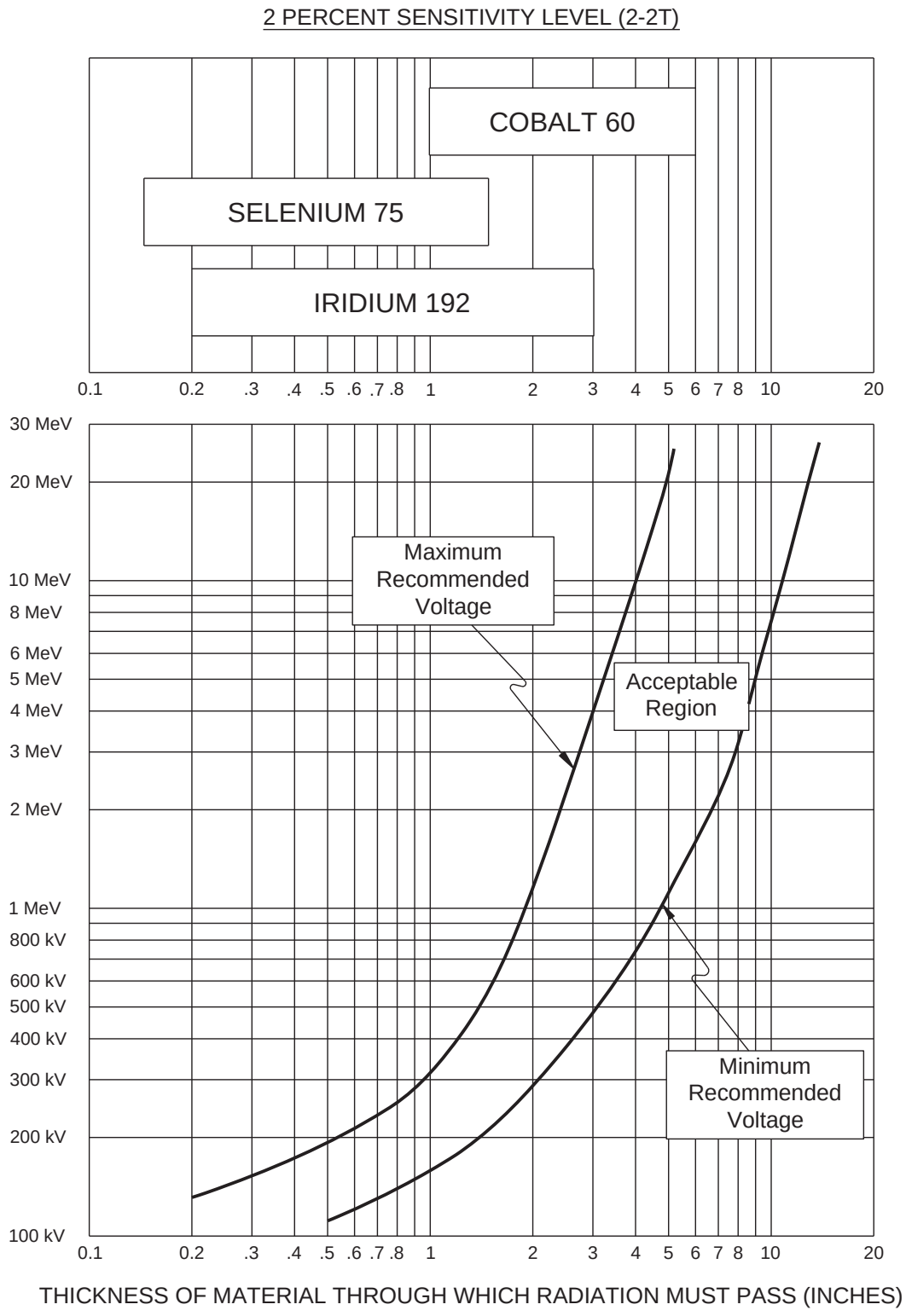

Figure 3-2. Recommended X-ray Voltage Settings and Radioisotope Sources to Be Used with Various Copper-Base and Similar Alloys.

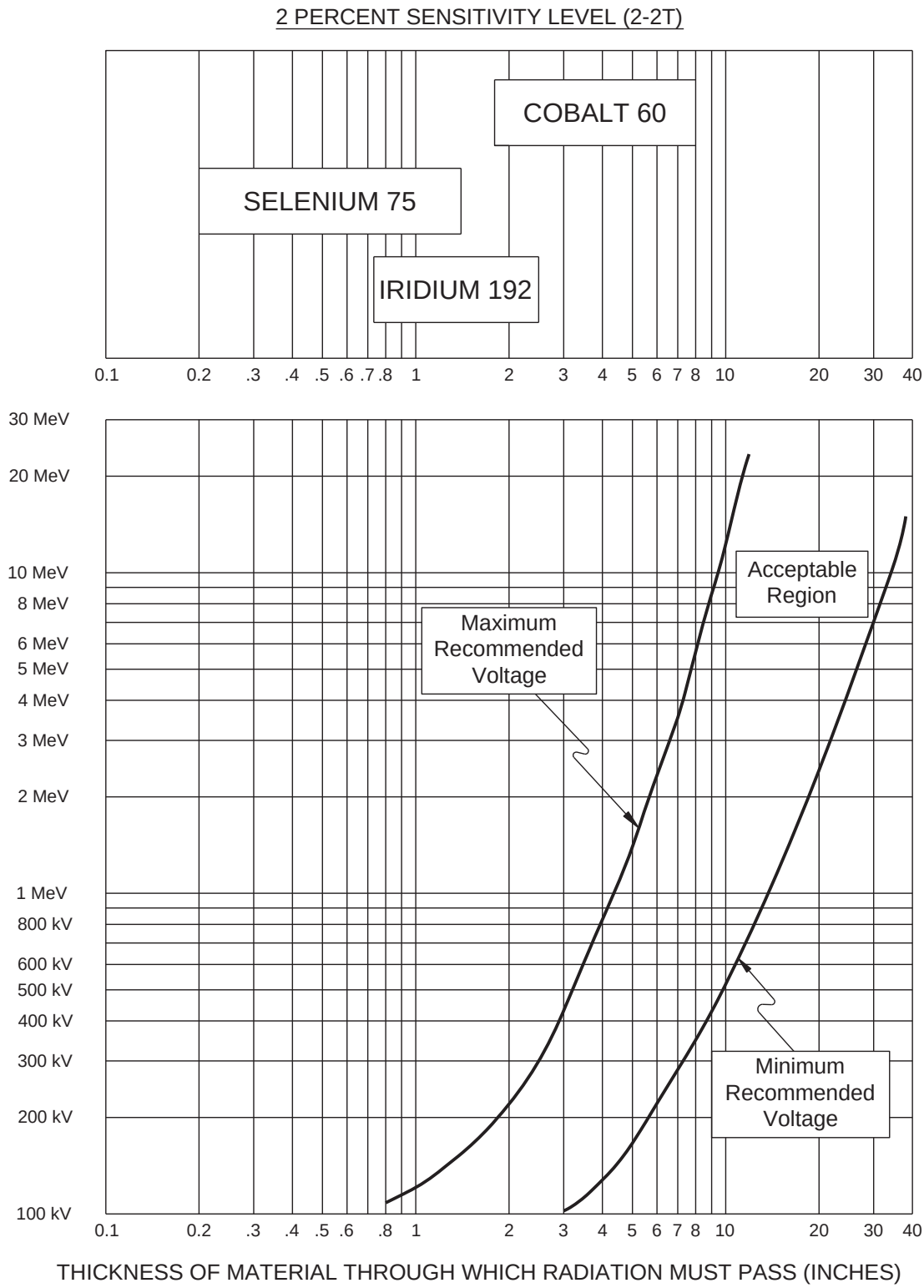

Figure 3-3. Recommended X-ray Voltage Settings and Radioisotope Sources to Be Used with Various Aluminum, Magnesium and Similar Alloys.

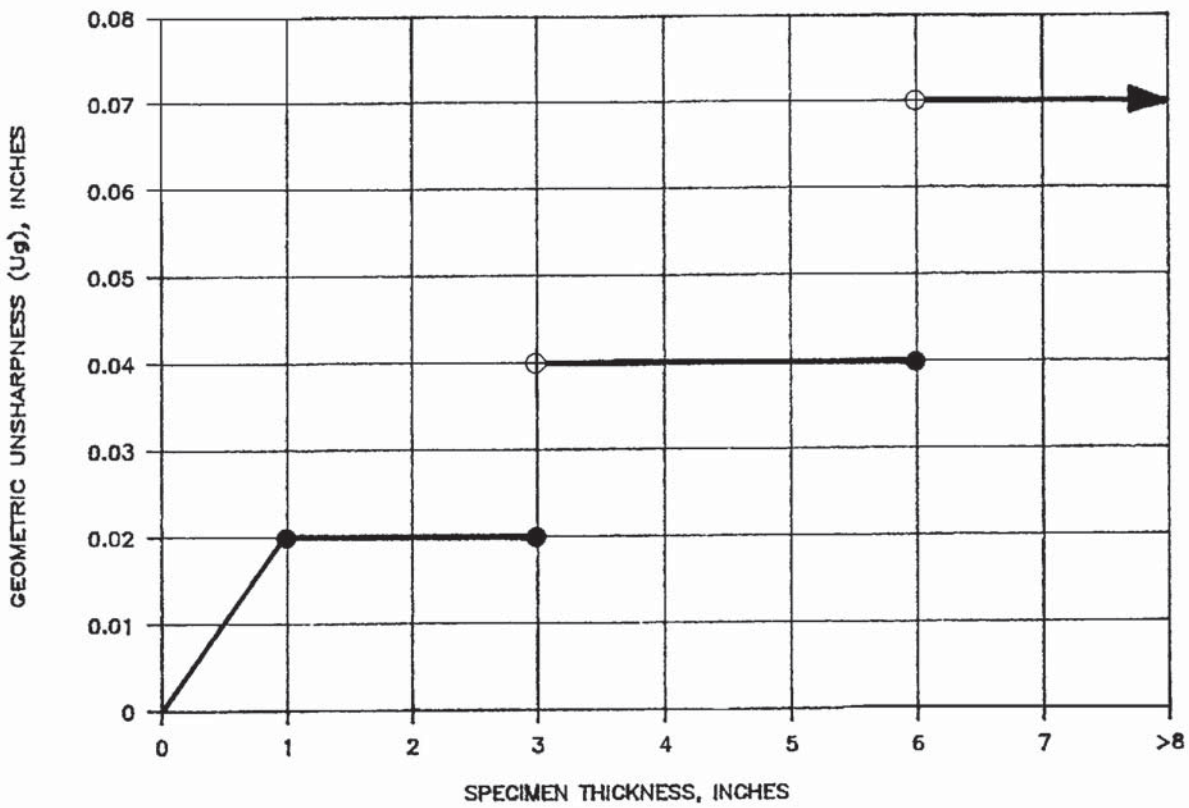

Notes

1. The symbol ● indicates inclusive.

2. For specimen thicknesses less than one inch, U_g is calculated by:

$$U_g = 0.02 \times \text{SPECIMEN THICKNESS}$$

Figure 3-4. Maximum Allowed U_g.

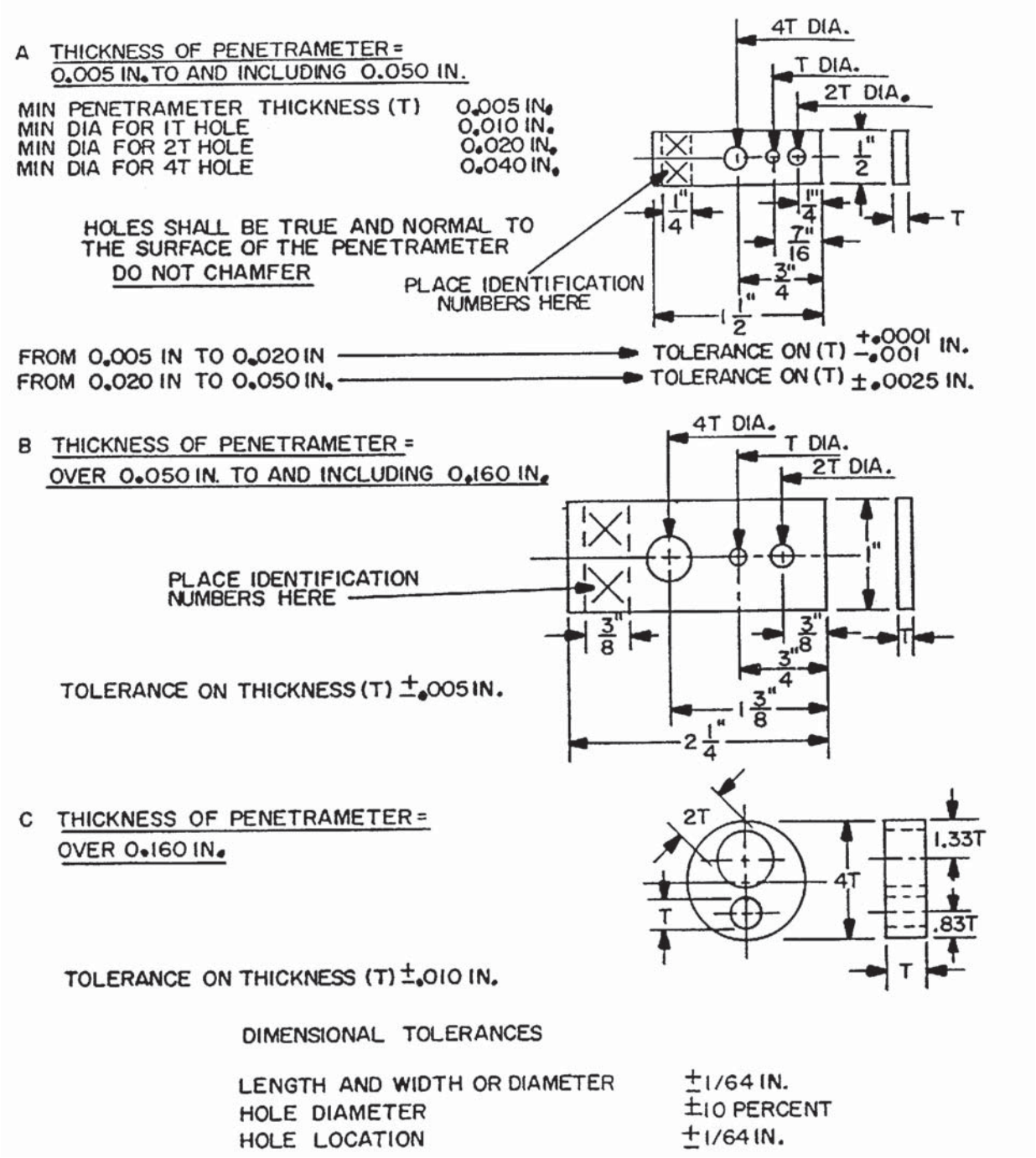

Figure 3-5. Penetrameter Designs.

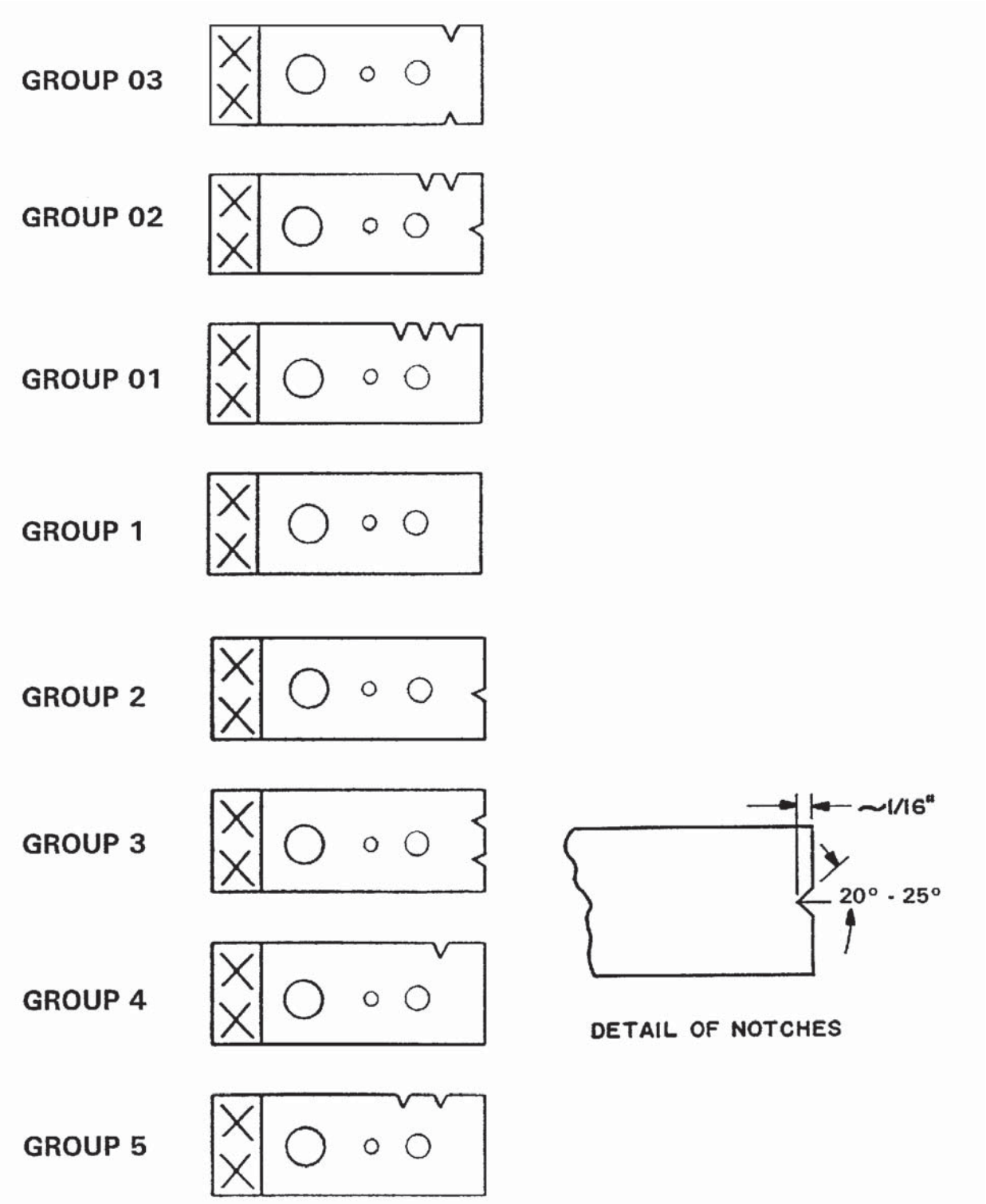

Figure 3-6. Penetrameter Identification Notching.

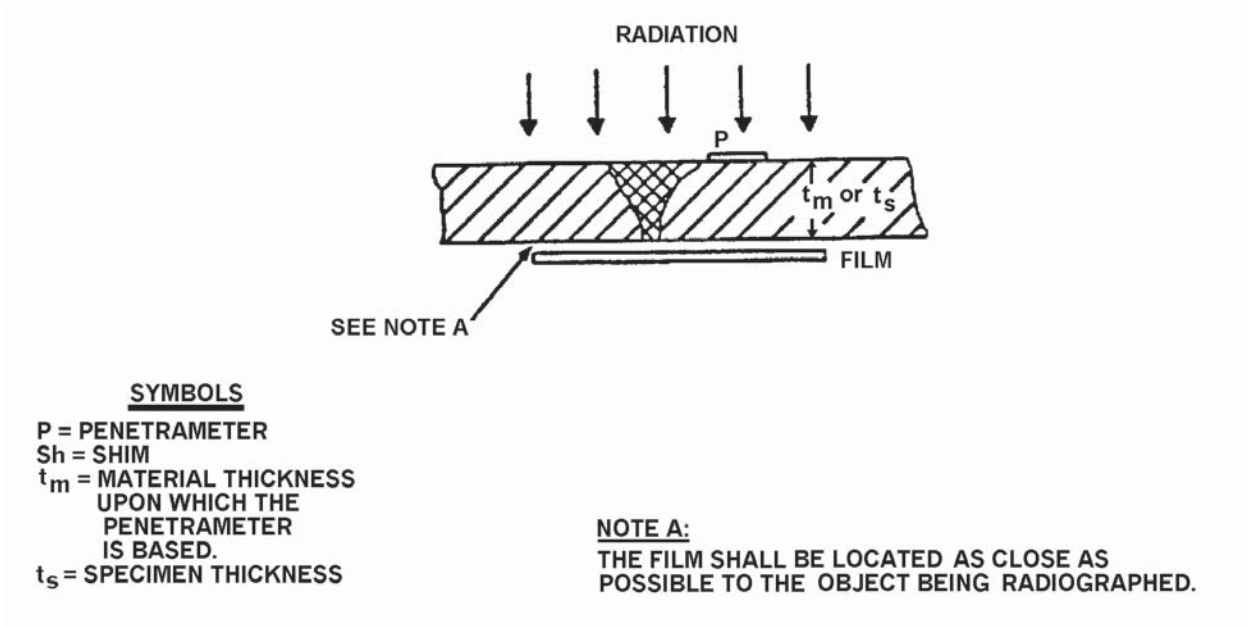

Figure 3-7. Examples of T_m, T_s, and Penetrameter Placement: Single Wall, No Reinforcement, No Back-Up Strip.

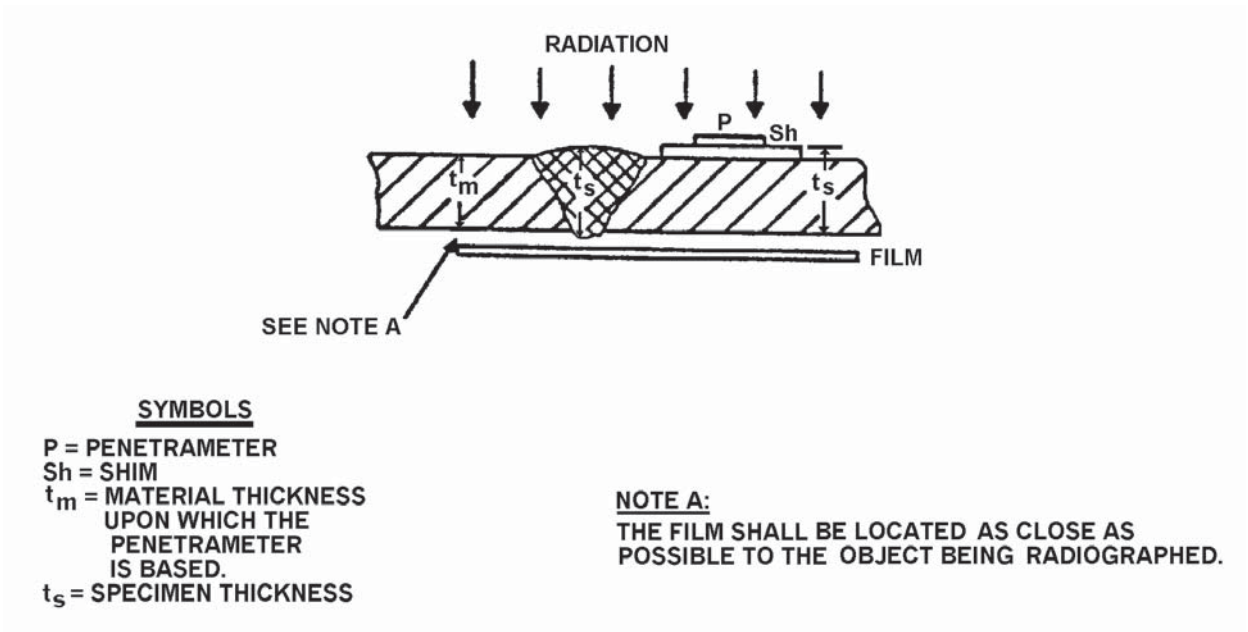

Figure 3-8. Examples of T_m, T_s, and Penetrameter Placement: Single Wall, Weld Reinforcement, No Back-Up Strip.

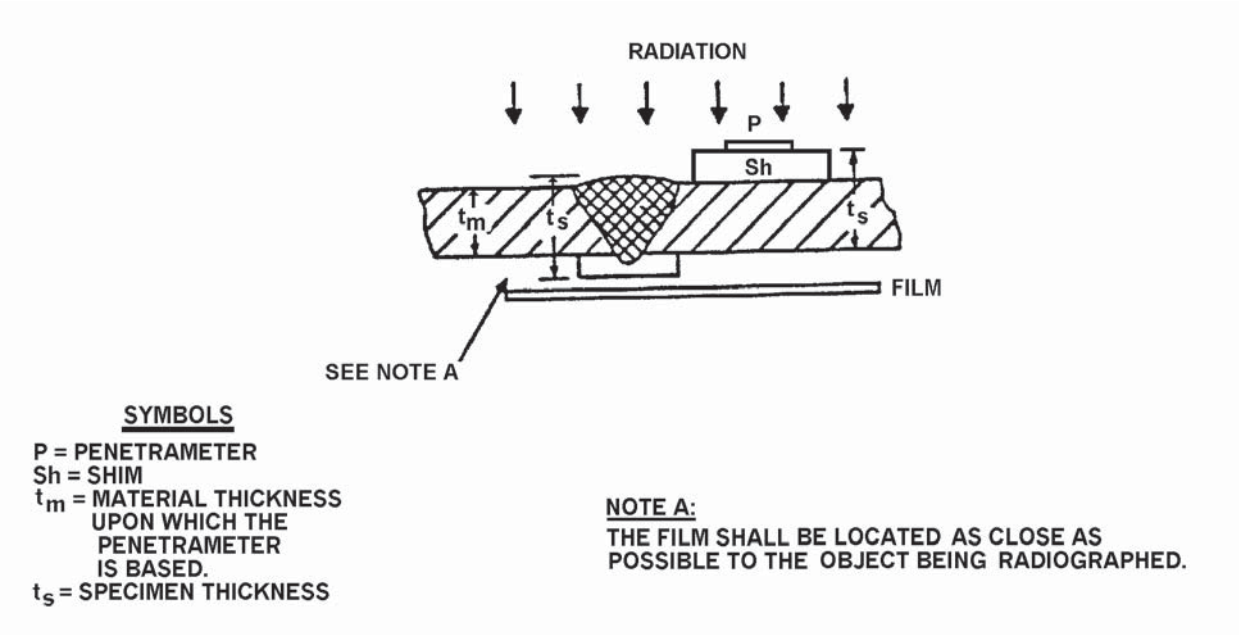

Figure 3-9. Examples of T_m, T_s, and Penetrameter Placement: Single Wall, Weld Reinforcement, Back-Up Strip.

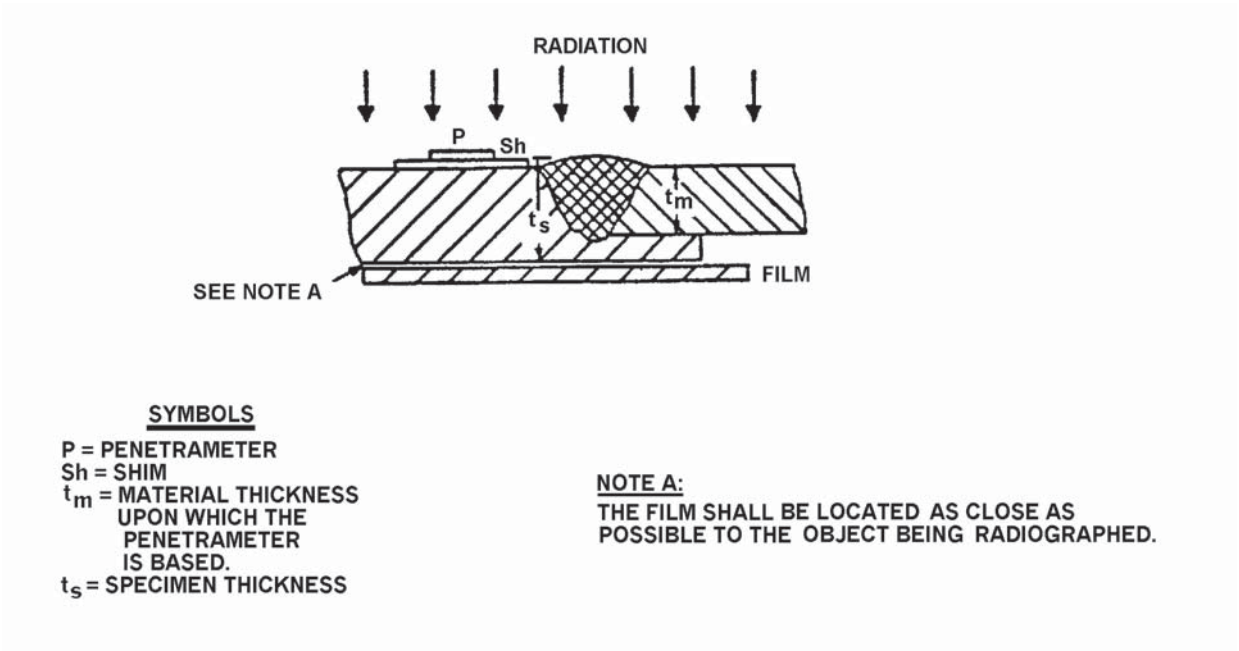

Figure 3-10. Examples of T_m, T_s, and Penetrameter Placement: Single Wall, Integral Backing Ring, Weld Reinforcement.

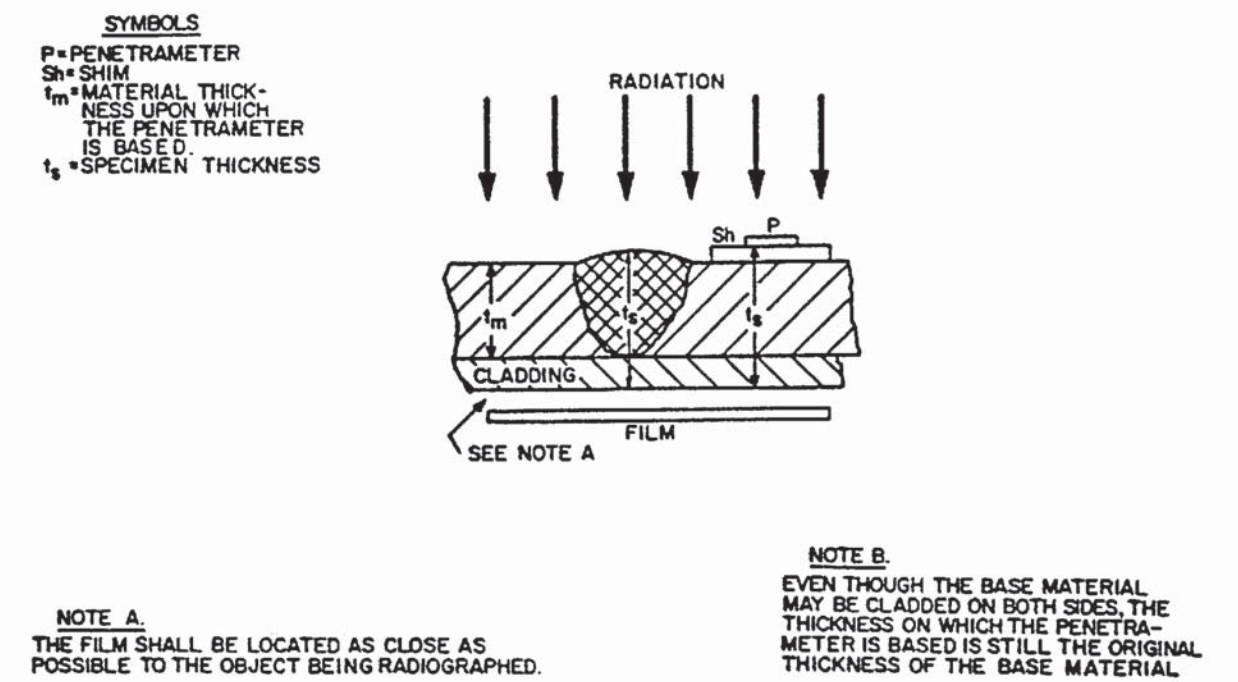

Figure 3-11. Examples of T_m, T_s, and Penetrameter Placement: Single Wall, Weld Reinforcement, Cladding Redeposited Over Weld in Base Metal.

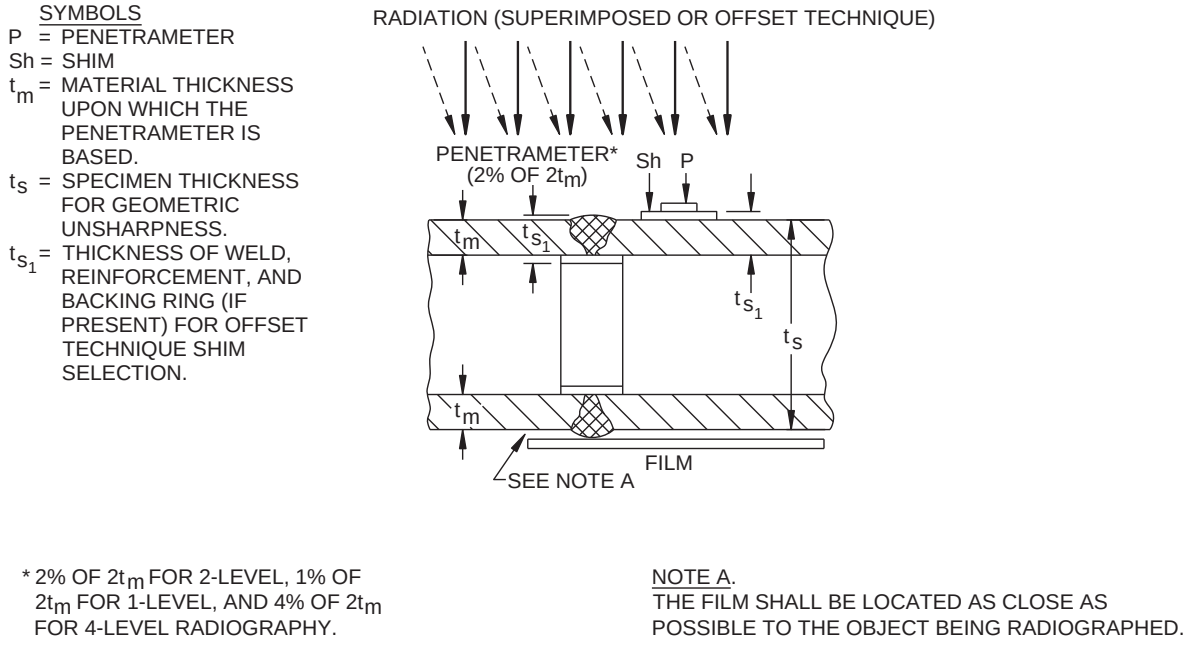

Figure 3-12. Examples of T_m, T_s, and Penetrameter Placement: Double Wall, Double Wall Viewing, Weld Reinforcement and Back-Up Strip.

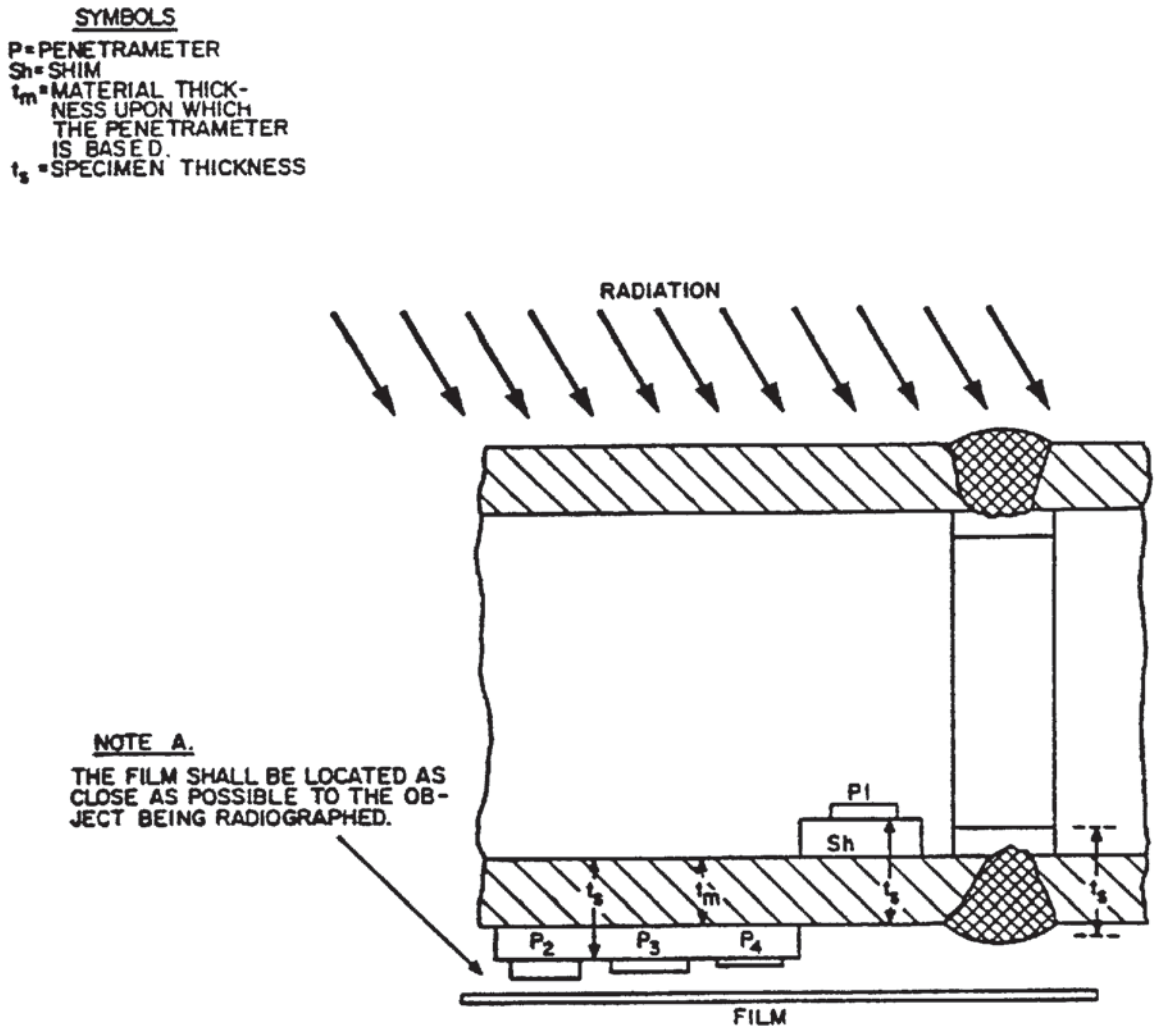

NOTE B.
ONLY THE PORTION OF THE WELD NEXT TO THE FILM IS TO BE VIEWED. PENETRAMETER (P_1) MAY BE PLACED INSIDE OF PIPE FOR EACH EXPOSURE, OR A TECHNIQUE SHOT, AS SHOWN, MAY ESTABLISH WHICH FILM-SIDE PENETRAMETER (P_2, P_3, OR P_4) SHALL BE USED IN SUBSEQUENT EXPOSURES, IF INSIDE OF PIPE IS NOT ACCESSIBLE.

Figure 3-13. Examples of T_m, T_s, and Penetrameter Placement: Double Wall, Single Wall Viewing.

NOTE A.
THE FILM SHALL BE LOCATED AS CLOSE AS POSSIBLE TO THE OBJECT BEING RADIOGRAPHED.

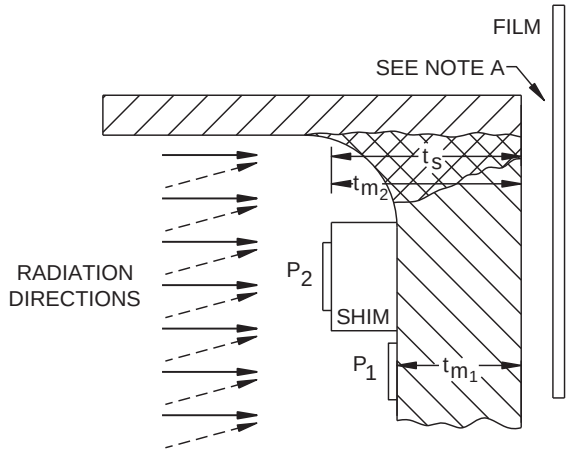

NOTE B.
PENETRAMETERS, BASED ON WELD THICKNESS (t_{m_1} AND t_{m_2}) TO QUALIFY VARIOUS THICKNESSES OF WELD. THIRD PENETRAMETER, BASED ON AVERAGE THICKNESS OF WELD TO BE USED IF REQUIRED. MULTIPLE EXPOSURE IF NECESSARY TO OBTAIN READABLE DENSITY OVER COMPLETE WIDTH OF WELD.

Figure 3-14. Examples of T_m, T_s, and Penetrameter Placement: Full Penetration Weld, Single Wall.

NOTE A.
THE FILM SHALL BE LOCATED AS CLOSE AS POSSIBLE TO THE OBJECT BEING RADIOGRAPHED.

NOTE B.
THE FILM MAY BE LOCATED INSIDE THE VESSEL IF A TRIAL EXPOSURE DEMONSTRATES THAT THE REQUIRED QUALITY LEVEL CAN BE OBTAINED.

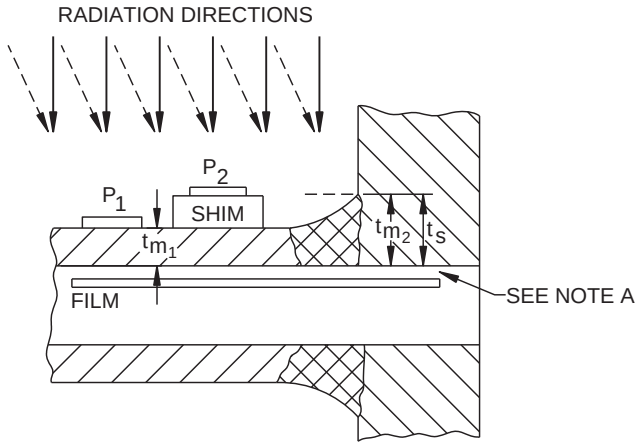

NOTE C.
PENETRAMETERS, BASED ON WELD THICKNESS (t_{m_1} AND t_{m_2}) TO QUALIFY VARIOUS THICKNESSES OF WELD. THIRD PENETRAMETER, BASED ON AVERAGE THICKNESS OF WELD TO BE USED IF REQUIRED. MULTIPLE EXPOSURE IF NECESSARY TO OBTAIN READABLE DENSITY OVER COMPLETE WIDTH OF WELD.

Figure 3-15. Examples of T_m, T_s, and Penetrameter Placement: Root Connection Weld, Single Wall.

CHAPTER 4
MAGNETIC PARTICLE TESTING

4.1 INTENDED USE.

The inspection process is intended for the detection of surface or near surface discontinuities in ferromagnetic materials.

4.2 DEFINITIONS.

The standard terminology for magnetic particle examination as described in ASTM E1316 shall apply to this section, except as noted below.

4.2.1 Relevant Indications. Accumulations of magnetic particles caused by discontinuities in the item tested which shall be evaluated to the applicable acceptance criteria.

4.2.2 Indication. Any magnetically held magnetic particle pattern on the surface of a part being tested.

4.2.3 Non-Relevant Indications. Accumulations of magnetic particles held to a particular area caused by conditions that have no bearing on the suitability of the part for service. Examples of such indications that could be considered non-relevant, when evaluated per 4.5, are as follows:

a. Magnetic writing: Indication is fuzzy and will be destroyed by demagnetization. These indications are caused by contact with other steel or magnets while magnetized.

b. Change in section: Indications are broad and fuzzy caused by concentration of magnetic field.

c. Flow lines: These are large groups of parallel indications that occur in forgings under excessive currents.

d. Change in permeability: These are areas in the material where the magnetic “strength” changes.

e. Surface roughness.

f. Permanent marking: Scribe lines and vibro-etching.

4.3 MAGNETIC PARTICLE INSPECTION REQUIREMENTS.

4.3.1 General Requirements.

4.3.1.1 Method. Magnetic particle inspection may be performed by either the wet or dry method. Unless otherwise specified, the inspection zone for welds shall include the weld and ½ inch of adjacent base material on each side of the weld, where possible.

4.3.1.1.1 Lighting in Test Area. The test area shall be adequately illuminated for proper evaluation of indications revealed on the test surface. Due to the fact that some light-emitting diode (LED) lights have been found to impair color contrast of indications, specific use of these types of lighting sources and other light sources that impair contrast of indications or adversely impact test results shall be approved by the activity’s NDT Examiner, or the Examiner's designated representative. When fluorescent magnetic particle material is used, the inspection shall be accomplished in a darkened area using black light (ultraviolet light). The black light shall be capable of producing an intensity of 800 microwatts per square centimeter on the inspection surface. Intensity shall be measured daily when used, and after bulb replacement. For battery operated black lights, the NDT Examiner shall include a process in the procedure to ensure the depleting battery life does not result in an unacceptable black light intensity during inspections. Not less than 5 minutes shall be allowed for the black light lamp to obtain full brilliance before the lamp is used for any part of the inspection. For LED and other black light sources that do not require a 5-minute warm up, the NDT Examiner shall approve and document an alternative warm up time in the procedure.

4.3.1.2 Procedure. All magnetic particle procedures shall include as a minimum the following information:

a. Material, shapes, and sizes to be tested.

b. Type and direction of magnetization to be used.

c. Equipment to be used for magnetization.

d. Surface preparation (finishing and cleaning).

e. Whether wet or dry method is to be used.

f. Type of magnetic particles to be used.

g. Whether continuous or residual method is used.

h. Magnetizing current (amperage, alternating current [AC], or direct current [DC]), and type (full-wave, half-wave, etc.).

i. Demagnetization.

j. Test for concentration of particle suspension (if any).

k. Sketches or a chart showing the typical inspection grid to be used.

l. Method of particle application and removal.

m. Applicable acceptance standards.

n. Method for determining maximum coating thickness (if any).

For the inspection of welds, the magnetic particle inspection procedure shall have the proven ability to detect a 1/16-inch long by 0.006 inch wide by 0.020 inch deep notch (maximum dimensions) oriented 90 degrees to the magnetic flux. The notch shall be cut in a 3/8-inch low alloy steel plate, and shall be filled flush with a nonconducting material, such as epoxy, to prevent mechanical holding of the indication medium.

4.3.1.3 Inspection Through Coatings. Magnetic particle inspection shall not be performed with coatings in place that could prevent the detection of surface defects in the underlying material. In addition, the procedure must be qualified with a coating of the same type and maximum possible thickness that will be encountered in the actual inspection. Furthermore, the procedure must also contain specific instructions as to what method the inspector is to employ to determine the maximum coating thickness in the area to be inspected. For non-ferromagnetic coating thicknesses of 0.003 inches and less, the qualification sample need not be coated.

4.3.1.4 Surface Preparation. Prior to inspection, surfaces shall be dry and free from any contamination that might interfere with the proper formation or interpretation of the magnetic particle patterns. With the exception of undercuts that are within specification allowances, the contour of welds shall blend smoothly and gradually into the base metal. Surface irregularities shall be removed to the extent that they will not interfere with interpretation of the test results. The final magnetic particle inspection shall be performed in the final surface and heat-treated conditions as specified in 1.4.

4.3.1.4.1 Cleaning and Masking. Grease or other matter that might interfere with the proper distribution and concentration or with the intensity, character, or definition of magnetic particle indications shall be removed from the surface undergoing the tests. All openings shall be plugged to prevent accumulation of magnetic particles or other matter where it cannot be completely or readily removed by washing and air blasting.

4.3.1.4.2 Cleaning Solution. Chlorinated solvents shall not be used on parts containing crevices.

4.3.1.5 Direction of Magnetization. To ensure detection of discontinuities having axes in any direction, not less than two separate inspections shall be carried out on each area. The second inspection shall be with the magnetic field at right angles to that used in the first inspection or as allowed by 4.3.3.4.1. A different means of magnetizing may be employed for the second inspection of the area.

4.3.1.6 Demagnetizing Apparatus. Demagnetizing equipment shall consist of units, such as the open coil or box-type demagnetizer, with sufficient capacity to demagnetize the item.

4.3.1.6.1 Demagnetization. All items shall be demagnetized at the following stages to obtain satisfactory indications of discontinuities:

a. Prior to testing, if the material contains strong remnant fields from some previous operation or inspection.

b. After all magnetic particle testing is completed, if the remnant field interferes with the removal of the magnetic particles in cleaning the part or when specified in the appropriate equipment specification.

4.3.1.7 Equipment Accuracy. Magnetic particle testing equipment shall be checked for accuracy at the time of purchase and at an interval not greater than 6 months and whenever electrical maintenance is performed which may affect the equipment accuracy. Yokes are exempt from the 6 month retest schedule.

4.3.1.7.1 DC Portable Prod and Stationary Magnetic Particle Equipment. To check the equipment ammeter, a suitable calibrated ammeter shall be connected in series with suitable shunts and the current through the electrodes measured. The amperage measured by the calibrated ammeter during the test shall simultaneously be compared to that indicated on the meter of the magnetic particle equipment. The equipment meter shall agree (within 5 percent of full scale) with the current measured by the calibration meter.

4.3.1.7.2 Yoke Equipment. Yokes shall be checked for adequacy of magnetization strength. With the pole spacing set to the maximum that the yoke will be used for, the lifting power, as applied to carbon or alloy steel, shall not be less than 10 pounds for AC electromagnetic yokes. Permanent magnet or DC yokes shall not be used.

4.3.1.8 Magnetizing Current. The magnetizing current shall be based on formulas provided herein or the current shall be determined by means of a segmented magnetic particle field indicator as shown on figure 4-1. Where examination is being performed on complex shapes, the field indicator shall be used to determine the adequacy of the field. The current or technique shall be modified as necessary to ensure that an adequate field is present on all surfaces to be examined.

4.3.1.9 Record Requirements. Records (see 1.8) of magnetic particle inspections shall contain the following:

a. Description and unique identification of item inspected.

b. Approved procedure identification.

c. Instrument manufacturer and model number, or unique equipment identification (yokes excluded).

d. Acceptance standard used.

e. Date of inspection.

f. Signature(s) of inspector(s).

g. Disposition (accept/reject) of the item inspected.

4.3.2 Wet Method.

4.3.2.1 General Requirements. Finely divided magnetic particles shall be suspended in a liquid vehicle as the indicating material. The magnetic particles may be either fluorescent or nonfluorescent. All particles shall meet the requirements of SAE AMS 3041, 3042, 3043, 3044, 3045, or 3046 as applicable.

4.3.2.1.1 Equipment. The magnetizing apparatus shall be capable of inducing, in the item under test, a magnetic flux of suitable intensity in the desired direction by either the circular or the longitudinal method.

4.3.2.2 Vehicles. The liquid used as a vehicle for both nonfluorescent and fluorescent magnetic particles shall comply with the following:

a. Petroleum distillate conforming to the following specifications shall be used:

   (1) MIL-PRF-680

   (2) ASTM D3699

   (3) SAE AMS 3161

   (4) SAE AMS 2641

   (5) A-A-59230

b. Tap water with suitable rust inhibitors and wetting and antifoaming agents may be substituted for the petroleum distillate.

c. Liquid vehicles used with fluorescent magnetic particles shall be nonfluorescent.

4.3.2.2.1 Cleaning and Drying. Prior to the application of the suspension, all oil, grease, or other foreign matter shall be thoroughly removed from the surface to be tested. Following the removal of the suspension, the piece shall be thoroughly cleaned and dried.

4.3.2.3 Magnetic Particles. Magnetic particles shall be nontoxic and shall exhibit good visual contrast. Fluorescent magnetic particles shall be readily visible when exposed to a filtered black light, as specified in 4.3.1.1.1.

4.3.2.4 Suspensions. Suspensions shall consist of the liquid vehicle and either fluorescent or nonfluorescent magnetic particles, but both types of particles shall not be used simultaneously. Concentration of the suspensions shall be maintained as specified in 4.3.2.6.1.

4.3.2.5 Procedure. Suspensions shall be applied to items being tested by spraying or immersion to ensure thorough coverage of areas requiring tests.

4.3.2.5.1 Continuous Method. For the continuous method, the magnetizing circuit shall be energized just before diverting the stream of suspension from the item being tested, or just before removing the item from the suspension if testing is by immersion, and allowed to remain energized for not less than ⅕ second, with the result that the magnetizing current is applied while the item is still covered with a film of suspension sufficient to give satisfactory indications.

4.3.2.5.2 Residual Method. For the residual method, the item shall be magnetized by the application of direct current (DC) for not less than ⅕ second, after which the magnetizing current shall be turned off and the suspension shall be applied either by spraying or by immersion in the suspension. For application by immersion, the item shall be removed carefully from the suspension to avoid washing off the indications. The residual method shall be used only for inspection of small parts, such as nuts, bolts, pins, gears, and others.

4.3.2.5.3 Circular Magnetization; Central Conductor (Indirect Method). A central conductor shall be used in all cases where testing of internal surfaces of enclosed or cylindrically shaped items of small diameter are required. A central conductor may also be used for circular magnetization of other shapes, when applicable. The conductors shall be as near the inside diameter as practicable. Items shall be spaced to avoid contact, and if warranted by the quantity of work involved, suitable fixtures shall be used for proper orientation.

4.3.2.5.4 Circular Magnetization; Item as Conductor (Direct Method). Where it is necessary to pass current through the item, care shall be exercised to prevent arcing or overheating at the electrode contact areas. Contact areas shall be clean, items shall be mounted horizontally between contact plates, and suitable head pressure exerted to ensure uniform magnetization. When practicable, large and heavy items shall be mounted in suitable fixtures to ensure proper orientation. When protective coatings would interfere with the flow of current, they shall be removed at the area of contact. After tests, the coating shall be repaired.

4.3.2.5.5 Circular Magnetization; Magnetizing Current. The magnetizing current required for an item depends on its shape, configuration, and size. The optimum current setting shall be determined by means of a segmented magnetic particle field indicator tested as specified in 4.3.1.8.

4.3.2.5.6 Longitudinal Magnetization. When a solenoid is used to magnetize items, the solenoid shall be no larger than necessary to accommodate the item, and items shall be orientated within the solenoid to ensure adequate field strength.

4.3.2.5.7 Longitudinal Magnetizing Current. For longitudinal magnetization using a solenoid, the magnetizing force in ampere-turns should be determined in the following manner for general applications:

The ampere-turns used shall be 45,000/(L/D) (±10 percent), where L is the length and D is the diameter of the part. The L/D ratio for parts being magnetized shall be two or more. Coils are usually effective in magnetizing the part for about 8 to 12 inches from each end of the coil. If longer parts are to be inspected, several magnetizing shots will be required. Either the inside or the outside diameter may be used depending on which surface is being inspected. When both surfaces are to be inspected, the larger diameter shall be used. A magnetic particle field indicator shall be used as specified in 4.3.1.8.

For those parts whose L/D ratio is less than two, the required magnetizing current shall be calculated using a value of two for L/D and adequacy of magnetization shall be verified by use of a magnetic particle field indicator as specified in 4.3.1.8.

4.3.2.6 Maintenance of suspension. The suspension in use shall be tested for content of magnetic particles at intervals depending upon frequency of use, discoloration and contamination, but in any event not less than once each day. When the suspension becomes discolored by oil or contaminated with lint or other foreign material to the extent that proper distribution and concentration of the suspension or the intensity, character, or definition of the deposit of the magnetic particles are interfered with, the container shall be drained, thoroughly cleaned, and refilled with clean suspension.

4.3.2.6.1 Concentration of Suspension Test. The test method shall be determined by the organization. If for any reason the Government inspector doubts the adequacy of the method employed, he shall request the concentration to be checked by the following tests:

a. Fill a standard 100-milliliter (mL) graduate to the 100 mL mark with the suspension directly from the hose or other device used for pouring it over the piece in making a test, or from an immersion tank after the suspension has been thoroughly agitated. Let the suspension stand for 30 minutes to precipitate or until the solid matter is apparently all down.

b. Decant the clean liquid as far as practicable without loss of magnetic substance.

c. Refill graduate above magnetic substance with Type II Stoddard Solvent in accordance with MIL-PRF-680 or acetone for water-base suspension. Shake well and let stand for 30 minutes to precipitate a second time.

d. Read the height or volume of the precipitate in the graduate. The readings shall be as follows:

   (1) The nonfluorescent magnetic particles: 1.2 to 2.4 mL.

   (2) The fluorescent magnetic particles: 0.1 to 0.7 mL.

e. If the concentration was checked daily, steps (b) and (c) may be omitted.

f. For manufacturer-supplied aerosol cans, a certification statement from the manufacturer identifying the material by batch, and stating that it meets the concentration requirements of this specification, is an acceptable alternative to the above process.

4.3.3 Dry Powder Method.

4.3.3.1 General Requirements for Magnetic Particles. The magnetic particles used for obtaining patterns of discontinuities shall be of a nontoxic, finely divided ferromagnetic material of high permeability and low retentivity, free from deleterious rust, grease, paint, dirt, or other material that might interfere with their proper functioning. Particles shall be of such size, shape and color as to provide adequate sensitivity and contrast for the intended use. All particles shall meet the requirements of SAE AMS 3040.

4.3.3.2 Application and Removal of Particles. Dry magnetic particles shall be applied in such a manner that a light, uniform, dust-like coating settles upon the surface under test.

4.3.3.2.1 Removal of Excess Particles. Excess dry particles shall be removed by means of a dry air current of sufficient force to remove excess particles without removing relevant indications formed during powder application. Removal of excess particles shall comply with the procedure of 4.3.1.2 and must be accomplished while the magnetic field is applied to the item under test.

4.3.3.2.2 Automated Equipment. Automatic powder blowers or any other form of forced air other than from a hand-held bulb shall not be used for the application or removal of dry magnetic particles unless specifically approved by NAVSEA.

4.3.3.3 Magnetizing Procedures.

4.3.3.3.1 Circular Magnetization. The method of magnetization and the magnetizing current shall be as specified in 4.3.2.5.3, 4.3.2.5.4, and 4.3.2.5.5, as applicable.

4.3.3.3.2 Longitudinal Magnetization. The method of magnetization and the magnetizing current shall be as specified in 4.3.2.5.6 and 4.3.2.5.7.

4.3.3.3.3 Yoke Magnetization. Yoke spacing of greater than 8 inches or less than 2 inches is not recommended. However, if yoke spacing of greater than 8 inches or less than 2 inches must be employed, the procedure must be qualified with the exact yoke spacing that is to be used. In complex or restrictive configurations, where the placement of yoke legs may be impractical, AC or DC prods may be used in place of an AC yoke provided that the prod procedure has been properly qualified.

4.3.3.3.4 Magnetizing Current (Prod Methods). For prods, the magnetizing current, direct or rectified, shall be computed on the basis of 100 to 125 amperes per inch of prod spacing. Prod spacing of greater than 8 inches or less than 2 inches is not recommended. However, if prod spacing of greater than 8 inches or less than 2 inches must be employed, the procedure must be qualified with the exact prod spacing that is to be used.

4.3.3.4 Magnetizing Technique (Yoke and Prod).

4.3.3.4.1 Weld Inspection. The magnetic field shall be induced with the prods or yoke legs placed diagonally, 30 to 45 degrees, to the longitudinal axis of the weld, and repeating this test along the opposite diagonal of the weld. During inspection of adjacent areas of the weld, the prods or yoke legs shall overlap the previous placement by a minimum of 1 inch. As an alternative, the magnetic fields may be induced by placing the prods or yoke legs parallel to the longitudinal axis of the weld, overlapping the previous placement by a minimum of l inch. Subsequent to the longitudinal placement, the weld shall be inspected by placing the prods or yoke legs perpendicular to the weld. When this alternative is used, the area to be inspected shall be limited to one-fourth of the prod or yoke leg spacing on either side of a line joining the prods or yoke legs.

4.3.3.4.2 Base Metal. Base metal shall be inspected using the prod and yoke leg placement requirements of 4.3.3.4.1 to establish a grid pattern that ensures two-directional coverage of inspection areas.

4.3.3.4.3 Continuous Magnetization. During inspection, the magnetizing current shall remain on during the period the magnetic particles are being applied and while excess particles are being removed. For cases where the magnetic particles

can fall off the item before the inspection is complete, the magnetizing current shall remain on during the examination of the inspection area, and the evaluation of any detected indications.

4.4 EVALUATION OF INDICATIONS.

When using either prods or yokes, any detected indications should be evaluated when maximized by moving the prods or yoke to the optimum magnetization position and re-applying the test. Prods should be placed parallel to the indication; yokes should be placed perpendicular to the indication.

4.5 DETERMINATION OF RELEVANCY.

All indications revealed by magnetic particle inspection do not necessarily represent defects since non-relevant indications are sometimes encountered. All indications in weld craters shall be considered relevant. Indications caused by marking methods such as scribe lines and vibro-etching can be considered non-relevant unless the inspector has reason to believe that the marking is masking a relevant indication. If any other indications are believed to be non-relevant, the following methods may be used to prove non-relevancy:

a. Not less than 10 percent of each type of indication shall be explored by removing the surface roughness believed to have caused the type of indication to determine if defects are present. The absence of indications under reinspection by magnetic particle inspection after removal of the surface roughness shall be considered to prove that the indications were non-relevant with respect to actual defects. If reinspection reveals any indications, these and all of the original indications shall be considered relevant.

b. A liquid penetrant inspection after grinding to remove the surface roughness believed to have caused the indication.

c. Other methods for determining non-relevancy shall be approved by the authorized representative of NAVSEA.

d. For in-service inspection of lifting and handling equipment, 5X magnification may be used to determine the relevancy of indications believed to be caused by tool marks (tool chatter, die marks, etc.) nicks, scratches, gouges, or handling marks. The bottom of the depression shall be visible, rounded, and free of notches to be considered non-relevant. Every indication of this type shall be examined at 5X magnification when determining non-relevancy. If the disposition of the indication under evaluation is in question, the indication shall be evaluated as relevant.

4.6 FINAL CLEANING.

After completion of inspection, all magnetic particles shall be removed from all parts. All temporary plugs shall be removed from holes and cavities.

4.7 ARC STRIKES.

For applications governed by a fabrication document, arc strikes shall be removed and reinspected as required in the fabrication document. For other applications the following shall apply: All evidence of arc strikes shall be completely removed by mechanical means and faired into surrounding material, and reinspected using the prod or yoke method or visually inspected at not less than 5X magnification. Excavations and remaining wall thickness shall be inspected for and shall meet the requirements of the governing specification.

4.7.1 Arc Strikes in High Hardenability Materials. For all arc strikes that occur after final heat treatment in S-1 materials with carbon content greater than 0.30 percent, S-3, S-3A, S-4, S-5, S-6, and S-6A materials (as defined in S9074-AR-GIB-010/278), complete removal of the heat affected zone shall be verified with an etchant that has been demonstrated to disclose heat affected zone structure in the material involved unless repair welding is required. Etchants shall be prepared and used in accordance with good metallurgical practice.

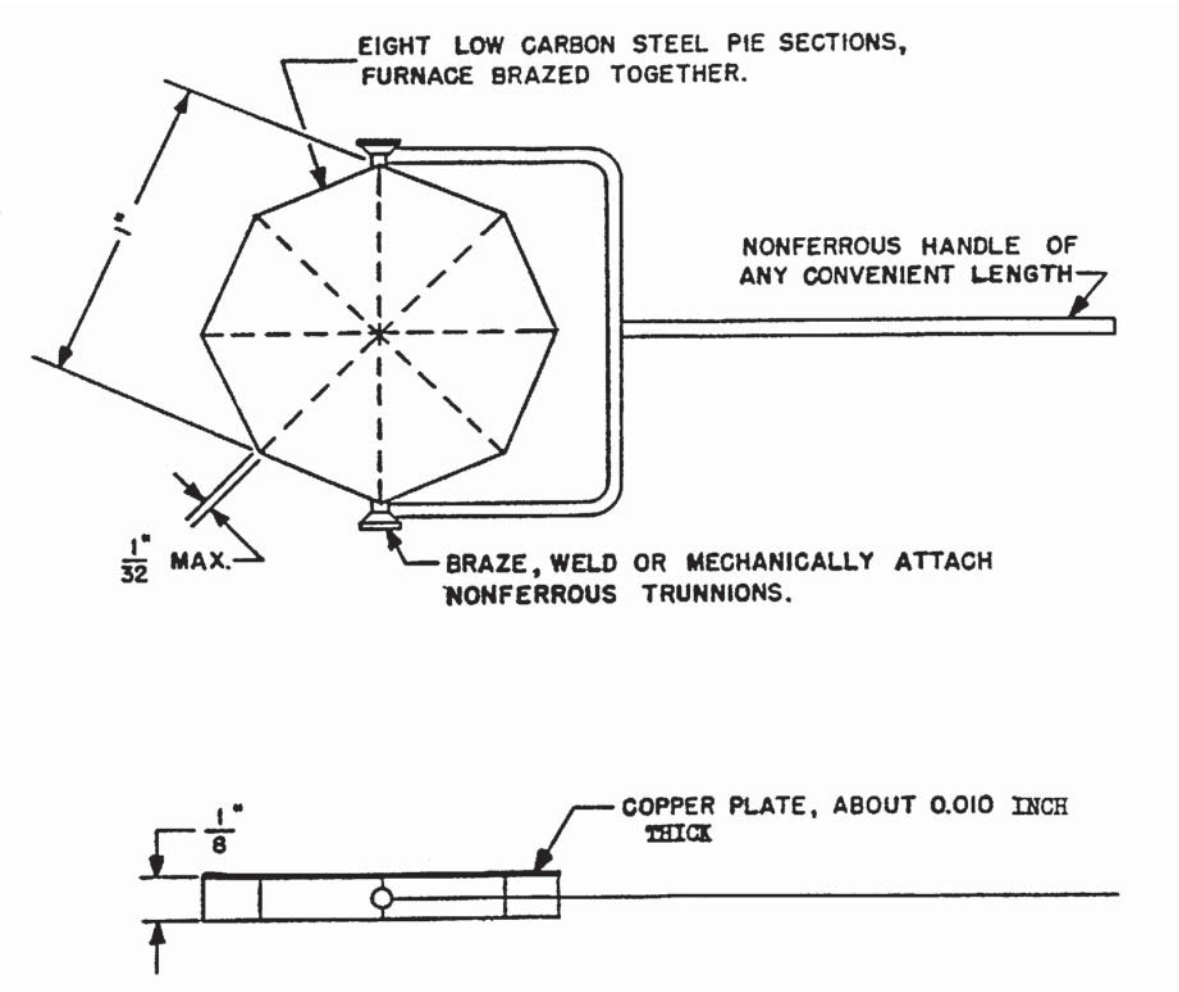

Suitable magnetic flux is indicated when the indicator is laid, copper side exposed, on the work piece in the area of interest and after application of the magnetic particles (and removal of excess particles for the dry powder method), the lines at 45 and 90 degrees to the applied field are clearly visible. In cases where the indicator is in partial contact with the work piece, suitable magnetic flux is indicated when the lines at 45 and 90 degrees to the applied field are clearly visible on the portion of the indicator that is in contact with the work piece.

Figure 4-1. Magnetic Particle Field Indicator.

CHAPTER 5
LIQUID PENETRANT TESTING

5.1 INTENDED USE.

The liquid penetrant test method is used for detecting the presence of surface discontinuities in ferrous and nonferrous materials.

5.2 DEFINITIONS.

The standard terminology for liquid penetrant examination as described in ASTM E1316 shall apply to this section.

5.3 INSPECTION METHODS.

The inspection method designation shall correspond to and use the material classifications specified in 5.3.1.

5.3.1 Liquid Penetrant Material. Unless otherwise specified, liquid penetrant material shall meet the requirements of SAE AMS 2644, and the total halogens and sulfur of each material shall not be greater than 1 percent by weight of the residue. The penetrant inspection materials are classified as follows:

Penetrant types: Type 1- Fluorescent dye
Type 2- Visible dye

Removal methods: Method A- Water washable
Method B- Post emulsifiable, lipophilic
Method C- Solvent removable
Method D- Post emulsifiable, hydrophilic

Fluorescent Sensitivity level: Level ½ – Ultra low
Level 1 – Low
Level 2 – Medium
Level 3 – High
Level 4 - Ultra high

Sensitivity Level ½ applies to Type 1, Method A penetrants only. There is no sensitivity level classification for Type 2 penetrant systems.

Development forms: Form a-Dry powder
Form b-Water soluble
Form c-Water suspendable
Form d-Nonaqueous Type 1 Fluorescent (solvent based)
Form e-Nonaqueous Type 2 Visible Dye (solvent based)
Form f-Specific application

5.4 GENERAL REQUIREMENTS.

Penetrant testing shall be performed in accordance with a written procedure. Unless otherwise specified, the inspection zone for welds shall include the weld and ½ inch of adjacent base material on each side of the weld, where possible. Method C techniques shall not be used on threaded surfaces without approval of the authorized representative of NAVSEA. Method A shall not be used for welds, except for welds joining castings (casting to casting, or casting to other product forms) and weld repairs to castings, unless specifically approved by NAVSEA. Large inspection areas shall be divided into manageable sizes to ensure that all time requirements herein are met.

5.4.1 Procedure. The liquid penetrant inspection procedures shall contain, as a minimum, the following information:

a. Brand name and manufacturer's identifying designation of all materials used within each penetrant family. Each penetrant family shall be grouped together and include: penetrant type, removal method, sensitivity level (if applicable), and development form. Intermixing from different families or different manufactures is not permittted.

b. Details of method of precleaning and drying, including brand name (brand names for acetone, alcohol, or other bulk cleaners are not required) and type of cleaning materials used, drying temperature requirements, and time allowed for drying.

c. Details of method of penetrant application, the length of time that the penetrant remains on the surface, and the temperature of the surface and penetrant during penetration.

d. Details of method of removing excess penetrant from the surface, and of drying the surface before applying the developer (where applicable).

e. Details of the method of applying the developer and the length of developing time before inspection.

f. Method of post-test cleaning.

g. The applicable acceptance standards.

5.4.1.1 Change of Penetrant Materials. When the brand or type of precleaner, penetrant, penetrant remover (solvent), or developer differs from that specified in the procedure, the procedure shall be revised to include the alternate penetrant materials and shall be requalified.

5.4.1.2 Record Requirements. Records (see 1.8) of liquid penetrant inspections shall contain the following:

a. Description and unique identification of item inspected.

b. Approved procedure identification.

c. Penetrant manufacturer (brand) and type identification.

d. Acceptance standard used.

e. Date of inspection.

f. Signature(s) of inspector(s).

g. Disposition (accept/reject) of the item inspected.

5.5 SURFACE PREPARATION.

Surfaces to be inspected shall be free from scale, slag and adhering or imbedded sand, or other extraneous materials. With the exception of undercut that is within specification allowances, the contour of welds shall blend smoothly and gradually into the base metal. Weld surface irregularities shall be removed to the extent that they will not interfere with interpretation of the test results. The final liquid penetrant inspection shall be performed in the final surface condition as specified in 1.4 herein. Mechanical or abrasive operations may be performed on surfaces to be liquid penetrant inspected, provided the final surface condition does not exhibit visible smearing or similar deformation. Tumbling, peening, power wire brushing, or shot, sand, grit, or vapor blasting shall not be performed on surfaces to be liquid penetrant inspected unless some other surface preparation that does not result in smearing or similar deformation of the treated surface is performed before inspection, or if specifically approved by the authorized representative of NAVSEA.

5.5.1 Finished Surfaces. Surfaces for which a specific finish is required shall be given such surface finish prior to the final liquid penetrant inspection prescribed by the applicable specifications. Inspection at intermediate stages of fabrication shall be as specified in the applicable specification.

5.6 TEST PROCEDURES.

5.6.1 Order of Testing. All liquid penetrant tests shall be performed prior to ultrasonic inspections on the same surfaces to avoid interference between the penetrant dye and any residual couplant. If liquid penetrant tests must be performed after ultrasonic inspection, and a couplant other than water without an additive is used, a special cleaning operation shall be used. This special cleaning operation shall be defined in a local procedure, qualified in a manner similar to the procedure of 5.6.2.1, and approved by the activity's NDT Examiner.

5.6.2 Pre-Test Cleanliness. Prior to liquid penetrant inspection, the surface to be tested shall be dry and free of dirt, grease, lint, scale and salts, coatings, or other extraneous matter that would obscure surface openings or otherwise interfere with the test. Any adjacent area within one inch of the surface to be tested (for welds, any area within one inch from the toe of the weld) shall be dry and free of any foreign material that might contaminate the dye or otherwise interfere with the inspection. If a nonvolatile liquid is used for cleaning, the surface shall be heated or dried with hot air to assure complete removal of the cleaner. As a final cleaning operation each surface shall be dipped, sprayed, wiped, or brushed with, acetone, denatured ethanol (ethyl alcohol), isopropanol (isopropyl alcohol), or alternate cleaner/removers supplied by penetrant manufacturers which meet the requirements of SAE AMS 2644 and have been qualified in accordance with 5.6.2.1. Surfaces shall then be thoroughly dried by removing the excess with a clean dry cloth or absorbent paper, and allowing the remainder to evaporate for an appropriate drying time as follows:

Solution	Method of Application	Evaporation Time
Acetone	Any	5 minutes
Alcohol	Wiping with dampened cloth or absorbent paper	5 minutes
Alcohol	Other than wiping	20 minutes
Other	As established (See 5.6.2.1)	As established (See 5.6.2.1)

5.6.2.1 Qualification of Alternate Precleaners. Other precleaners may be used for the final cleaning operation provided they meet the halogen and sulfur requirements of 5.3.1 and are qualified as follows: (Note that any precleaners qualified according to the following paragraphs shall only be used with the same air circulation (forced vs. natural) and temperature conditions used in the qualifying process.)

a. The performance of the proposed cleaner, method of application, and associated drying time/temperature combination shall be compared to the performance of acetone through the use of three SAE AMS 2644 Type 2 penetrant system test panels (aluminum quench crack panels). The panels shall be soaked in an oil-based cutting fluid for 24 hours prior to the evaluation.

b. The acceptability of the proposed precleaner, method of application, and drying time/temperature combination shall be based on a comparison of the results obtained with the candidate procedure (using the minimum drying time/temperature combination (within 20 °F), and circulating air, if specified) versus acetone using a five minute drying time. All of the other procedure parameters shall be the same for the two trials. The minimum penetrant dwell time and the minimum development time allowed by the procedure shall be used. If, in the opinion of the Examiner, the indications obtained with the proposed precleaner and associated drying time/temperature combination are essentially the same as those obtained with the acetone, the precleaner and associated drying time/temperature is qualified for use.

c. Documentation of the qualification shall include the signature of the Examiner and shall be provided to the Government inspector upon request.

5.6.3 Temperature. Maximum penetration into extremely small openings requires that the penetrant and the test surface be maintained at the temperature recommended by the penetrant manufacturer but shall not be less than 50 °F. The temperature of the penetrant and the test surface shall not be greater than 100 °F, except that for Type 2 Method C materials the temperature of the test surface may be a maximum of 150 °F or the maximum temperature recommended by the manufacturer, whichever is less. Due to the flammable nature of liquid penetrant inspection materials, the use of an open flame for heating

purposes shall be prohibited. Special conditions requiring deviation from the above require approval by an authorized representative of NAVSEA.

5.6.4 Penetrant Application. The surface to be tested shall be thoroughly and uniformly coated with penetrant and shall be kept wetted throughout the penetration dwell time. The penetrant dwell time starts when penetrant has been applied to the entire area being inspected. Any reduction in the liquid penetrant dwell time shall be specifically approved by NAVSEA. Unless prior approval has been obtained, the liquid penetrant dwell time shall be as follows:

Penetrant	Minimum penetration time (minutes)
Type 2, Method C	15[1/]
Type 2, Method B or D	15
Type 2, Method A	25
Type 1, Method A	25
Type 1, Method B or D, Level 1/2, 1, 2, 3	15
Type 1, Method B or D, Level 4	10
Type 1, Method C	15

1/ For Type 2, Method C penetrants only, the minimum dwell time may be reduced to 5 minutes provided: (1) the surface to be tested has not been exposed to lubricants, machining oils, or cutting fluids following welding, thermal cutting, or arc strike removal; or (2) the surface to be tested has been subjected to a heat treatment process above 1000 °F after exposure to lubricants, machining oils, or cutting fluids; or (3) the surface is being reinspected, and a 15-minute dwell time has already been utilized; or (4) exposure to lubricants machining oils, or cutting fluids is followed by a special cleaning operation as defined in the local procedure, qualified in a manner similar to the procedure of 5.6.2.1, and approved by the activity's NDT Examiner.

5.6.4.1 Application of Emulsifier (Methods B and D). The emulsifier shall be supplied by the same manufacturer as the penetrant and shall be applied in accordance with the manufacturer's instruction and as specified in 5.4.1.

5.6.5 Removal of Penetrant.

5.6.5.1 Method C Materials. The excess penetrant shall be removed from all surfaces as follows:

a. As much excess penetrant as possible shall be removed by first wiping the surface thoroughly with a clean dry cloth or absorbent paper.

b. The remaining excess penetrant shall be removed by wiping the surface with a clean cloth or absorbent paper dampened with a penetrant remover specified by the penetrant material manufacturer. (Note that for very smooth surfaces, the use of remover may not be necessary, and if used, could result in over cleaning.)

c. Flushing of the surface with any liquid following application of the penetrant and prior to developing shall be prohibited.

5.6.5.2 Method B and D Materials. Subsequent to completion of emulsification, the emulsifier shall be removed from the surface of the part by employing a warm water spray not greater than 120 °F and 40 pounds per square inch (psi) pressure. After washing, items to be inspected using Type 1 materials shall be checked under a black light to ensure complete cleaning. Alternatively, the penetrant shall be removed by use of the remover specified by the manufacturer of the penetrant.

5.6.5.3 Method A Only. The penetrant shall be removed from surfaces by swabbing with a clean lint-free cloth saturated with clear water or by spraying with water not greater than 120 °F and 40 psi. After washing, items to be inspected using Type 1 materials shall be checked under a black light to ensure complete cleaning.

5.6.6 Surface Drying.

5.6.6.1 Method C. The drying of test surfaces after the removal of the excess penetrant shall be accomplished by normal evaporation, or by blotting with absorbent paper or clean, lint-free cloth. Forced air circulation in excess of normal ventilation in the inspection area shall not be used. Unless otherwise specified by the penetrant manufacturer, the time for surface drying after removal of excess penetrant and prior to application of the developer shall not be greater than 10 minutes.

5.6.6.2 Methods A, B, and D. The drying of test surfaces shall be accomplished by using hot-air recirculating ovens, circulating air, blotting with paper towels or clean lint-free cloth, or by normal evaporation. If a drying oven is used, the temperature shall not exceed 160 °F. It is important that during the drying operation, no contaminating material be introduced onto the surface that may cause misinterpretation during the inspection operation. The time for surface drying operation shall be in accordance with the manufacturer's instructions.

5.6.7 Application of Developer. For Method C liquid penetrant inspections, only nonaqueous wet developers shall be used.

5.6.7.1 Nonaqueous Wet Developer. Surfaces shall be dry prior to application. Immediately prior to application, the developing liquid shall be kept agitated to prevent settling of solid particles dispersed in the liquid. The developer shall be uniformly applied in a thin coating to the test surface by spraying. If the geometry of the item being inspected precludes the use of a spray, a brush or similar applicator shall be used provided it results in a uniform, thin coating of developer. Pools of wet developer on the inspection surface shall not be permitted. Inspection shall be performed not less than 7 minutes and not greater than 30 minutes after the developer has dried.

5.6.7.2 Dry Developer. Dry developing powder shall be applied only on dry surfaces so that matting will be prevented. The powder shall be thinly but uniformly applied to provide a dusty appearance immediately after drying of the test surface. Inspection shall be performed not less than 10 minutes and not greater than 30 minutes after the developer has been applied.

5.6.7.3 Aqueous Wet Developer. This type of developer shall be uniformly applied to surfaces by dipping, spraying, or brushing as soon as possible after removal of all excess penetrant but in no case to exceed 10 minutes. Time for development of indications after the aqueous developer has been applied and dried shall not be less than 10 minutes and not greater than 30 minutes. The surface may be dried prior to the application of the aqueous wet developer, but this is not necessary. When using liquid-type developers, it is necessary that they be continually agitated in order to prevent settling of solid particles dispersed in the liquid. Pools of wet developer on the inspection surface shall not be permitted.

5.6.8 Lighting in Test Area. When using the visible dye penetrant method, the test area shall be adequately illuminated for proper evaluation of indications revealed on the test surface. Due to the fact that some light-emitting diodes (LED) lights have been found to impair color contrast of indications, specific use of these types of lighting sources and other light sources that impair contrast of indications or adversely impact test results shall be approved by the activity’s NDT Examiner, or the Examiner's designated representative. When fluorescent penetrant is used, the inspection shall be accomplished in a darkened area using a black light (ultraviolet light). The black light shall be capable of producing an intensity of 800 microwatts per square centimeter on the inspection surface. Intensity of the black light shall be measured daily when used, and after bulb replacement. For battery operated black lights, the NDT Examiner shall include a process in the procedure to ensure the depleting battery life does not result in an unacceptable black light intensity during inspections. Not less than 5 minutes shall be allowed for the black light lamp to obtain full brilliance before the lamp is used for any part of the inspection. For LED and other black light sources that do not require a 5-minute warm up, the NDT Examiner shall approve and document an alternative warm up time in the procedure.

5.6.9 Final Cleaning. When the inspection is concluded, the penetrant materials shall be removed as soon as possible by means of water or solvents as specified in 5.6.2 and with applicable cleaning specifications.

5.6.10 Safety Precautions. Penetrant inspection materials shall be used in accordance with all applicable safety regulations.

5.7 DETERMINATION OF RELEVANCY.

All indications in weld craters shall be considered relevant and shall be evaluated in accordance with the applicable acceptance standards. Indications caused by marking methods such as scribe lines and vibro-etchings can be considered non-relevant unless the inspector has reason to believe that the marking is masking a relevant indication. For other indications that are believed to be non-relevant, the following methods may be used to prove non-relevancy.

a. Not less than 10 percent of each type of indication shall be explored by removing the surface condition believed to have caused the indications and retested. The absence of indications under reinspection by liquid penetrant after removal of the surface condition shall be considered to prove that the indications were non-relevant with respect to actual defects. If reinspection reveals any indications, these and all of the original indications shall be considered relevant.

b. Other methods for determining non-relevancy shall be approved by the authorized representative of NAVSEA.

CHAPTER 6
ULTRASONIC TESTING

6.1 INTENDED USE.

The ultrasonic test method is used for the detection of discontinuities throughout the volume of material, measurement of wall thickness, and evaluation of bond characteristics in most types of material and in basic geometric configurations. Appendix B, Requirements for Ultrasonic Characterization and Sizing Inspection of Embedded and Surface Connected Discontinuities, addresses special flaw characterization and sizing requirements and are applicable only when specifically invoked.

6.2 DEFINITIONS.

The standard terminology for ultrasonic examination as described in ASTM E1316 shall apply to this section, except as noted below.

6.2.1 Acoustically Similar Materials. The same type of material as that to be inspected or another material experimentally proven to have an acoustical velocity within plus or minus 3 percent for thickness testing, and for amplitude comparison tests, the back reflection amplitude from equal thicknesses of material shall be within plus or minus 1 decibel (dB) of each other as measured on the instrument display. This test shall be conducted on samples having equal contour and surface finish for both the sound entrant and reflective surfaces.

6.2.2 Amplitude Rejection Level (ARL). The horizontal level on the instrument display which is established as either a percentage of full screen height or as a dB level based on the peak amplitude of the signal received from the applicable reflective surface in the calibration standard.

6.2.3 As-Welded Condition. The condition of weld metal, welded joints, and weldments after welding and removal of slag, spatter, and so forth, prior to any thermal or mechanical treatment.

6.2.4 Calibration. Adjustment of the ultrasonic system to give desired indication height and position from known reflecting standards as required for the inspection being performed.

6.2.5 Calibration Reflectors. Ultrasonic reflectors, such as side-drilled holes, flat-bottom holes, or notches, that are permitted by applicable documents to be used for calibration.

6.2.6 Calibration Standard. A sample of material acoustically similar to the material to be tested, containing known reflectors with which the ultrasonic system is calibrated and reference levels are established.

6.2.7 Class of Weld. Weld Classes I, II, and III are used to differentiate between critical and less critical welds and relate to acceptance criteria. Weld classes are defined by applicable fabrication documents.

6.2.8 Continuous Scan. A scanning practice in which each pass with the transducer overlaps the previous pass by not less than 25 percent.

6.2.9 Disregard Level (DRL). The horizontal level on the instrument display established at a given level below the amplitude rejection level (ARL).

6.2.10 Full Screen Height. The highest point on the instrument display used for evaluation and recording purposes, designated as 100 percent or scale 10.

6.2.11 IIW Block. A standard test block designed by the International Institute of Welding (IIW) to check the operation of the ultrasonic system and search units or transducers.

6.2.12 Instrument Display. Device used to show results of the ultrasonic examination. The device can be cathode ray tube (CRT), liquid crystal screen, segmented digital display, or other appropriate device.

6.2.13 Peak Indication. The maximum height or amplitude of an indication received from any one reflective surface using a constant gain setting.

6.2.14 Ultrasonic Test Sensitivity. The sensitivity at which the test will be conducted.

6.2.15 Ultrasonically Sound Material. A material capable of exhibiting an 80 percent of full scale reflected signal amplitude from a specified reflector with no more than 20 percent of full scale extraneous signal amplitude (noise).

6.2.16 Weld Heat Affected Zone (HAZ). Base material that is included in the weld inspection zone. The HAZ for ultrasonic inspection is measured from the base material surface to which weld metal will be applied, and follows any beveled weld preparation. If the exact location or angle of the beveled weld preparation surface is not known, a straight line shall be used, which connects the opposite surface weld toes.

6.3 PROCEDURE AND TEST METHODS.

The following test methods apply to the inspection of forgings, castings, rolled or extruded shapes, bar stock, plate, weldments, pipe and tubing, bonded materials, and metal sheet. As described herein, the procedures are largely manual. Automation, however, may be applied to these methods when it serves to minimize operator-induced variables; this relates only to testing, not to analysis. Techniques such as phased array, time of flight diffraction, and computer-assisted analysis in any form requires specific NAVSEA approval. Traditional C-scans and B-scans, and ultrasonic instruments using “gates” are not considered to be computer-assisted. Neither are such devices as “digital thickness gauges” or “data loggers.” Testing can be performed more easily and reproducibly on parts which have simple geometries associated with early stages of fabrication. Inspection methods other than those specified in this section may be used, provided approval is based on procedural qualification obtained from the authorized representative of NAVSEA. All tests shall be performed in accordance with a written inspection procedure approved as specified in 1.7.

6.3.1 Test Method Selection. The method or methods required for inspection of a component is specified by the equipment or material specification or other fabrication document. Selection of a test method or combination of methods shall be based upon the configuration and the orientation of expected discontinuities in the items to be inspected.

6.3.2 Surface Finish. Surfaces of material to be inspected shall be clean and free of dirt, loose scale, loose paint, or other loose foreign matter. Unless otherwise specified, the test surface may have one coat of primer (not to exceed 0.004 inch in thickness). Surfaces to be inspected shall have a finish of not greater than 250 Roughness Average (Ra) microinches and be free from waviness that may interfere with the test. Unless specifically permitted herein, the surface finish of the calibration standard shall not be any smoother than that of the material to be tested (except for thickness inspections, see 6.7.3).

6.3.3 Testing Speed. Rotation or speed of the part or search unit shall be controlled as closely as possible and shall be consistent with operator readout capability. In any case, the test speed shall not be greater than the maximum speed at which the calibration standard can be scanned to produce a clearly resolved indication.

6.3.4 Couplant. A couplant shall be used which causes acoustic coupling between the transducer and the part being inspected. This couplant shall not be injurious to the material. Glycerin, glycerin mixed with water, and glycerin mixed with alcohol are some materials that may be used as a couplant. The couplant shall be removed from the part at the completion of the inspection.

6.3.5 Calibration. Prior to any inspection, the equipment shall be calibrated, using the proper calibration standard, and shall be rechecked no less than once per 8-hour shift, and at the completion of testing. If the recheck indicates that instrument sensitivity has dropped by more than 1 dB, all items tested since the last instrument check shall be reinspected. During

testing, any realignment of the search unit or any change in search unit, instrument settings or scanning speed from that used for calibration shall require recalibration. (Note: For thickness measurement only, the gain setting may be modified without requiring recalibration.)

6.4 EQUIPMENT.

The instrument and accessory equipment shall be capable of generating, receiving, amplifying, and displaying electrical pulses at frequencies and pulse rates necessary for the intended inspection.

6.5 GENERAL REQUIREMENTS.

6.5.1 Equipment Requirements.

6.5.1.1 Basic Instrument Qualification - A-Scan Display Instruments. A single transducer shall be used to perform all of the instrument qualification operations of 6.5.1.1.1, 6.5.1.1.2, 6.5.1.1.3, and 6.5.1.1.4.

6.5.1.1.1 Vertical Linearity. The vertical linearity shall be within plus or minus 10 percent (in the range between 20 percent and 80 percent of full screen height) as measured in accordance with ASTM E317 or other approved method. Instrument settings used during inspection shall not cause variation outside the 10 percent limits established above.

6.5.1.1.2 Horizontal Linearity. When the time-distance relationship (horizontal linearity) displayed on the sweep of the instrument display is a function of the test, the horizontal linearity shall be within plus or minus 3 percent, as measured in accordance with ASTM E317 or other approved method.

6.5.1.1.3 Resolution. The system shall be capable of resolving the calibration holes within the range of T_m to be inspected using the calibration block(s) specified, as described in ASTM E317, or other approved method.

6.5.1.1.4 Attenuation. A calibrated gain or attenuator control, if used in a procedure, shall be evaluated according to the requirements of ASTM E317, or by converting dB to an amplitude ratio using the relationship:

$$Amplitude\ Ratio = \log_{10}{}^{-1}(dB/20)$$

The calibrated gain or attenuator shall be accurate to plus or minus 20 percent of the nominal amplitude ratio.

6.5.1.2 Basic Instrument Qualification - Thickness Gauge. Readings shall be made on each of a series of test blocks representative of the ranges of the instrument. A sufficient number of readings shall be made to accurately determine the thickness testing characteristics of the instrument. Readings shall be within plus or minus 3 percent of the true value. For thicknesses less than 0.150 inch, the readings shall be within plus or minus 0.005 inch of the true value.

6.5.1.3 Frequency of Basic Instrument Qualification. The basic instrument qualification shall be performed and documented at intervals not greater than 6 months or whenever maintenance is performed which affects the equipment function.

6.5.1.4 Shear Wave Transducers. Shear wave search units shall have a refracted angle within the limits of plus or minus 3 degrees of the designated angle at 68±10 °F, as determined by an IIW or similar block.

6.5.2 Inspection Procedure. The ultrasonic inspection procedures shall contain, as a minimum, the following information:

a. Materials, shapes, or sizes to be tested or to be exempt from test.

b. Automatic defect alarm and recording equipment or both.

c. Special search units, wedges, shoes, or saddles.

d. Rotating, revolving feeding mechanisms and indexing method.

e. Stage of manufacture when test will be made.

f. The surface from which the test shall be performed.

g. Surface finish.

h. Couplant.

i. Description of the calibration method.

j. Scanning (for welds, include specific requirements to ensure complete coverage of the required inspection zone).

k. Mode of transmission.

l. Transducer size and frequency, and angle, if applicable.

m. Acceptance standards.

n. Method of recording inspection results.

6.5.2.1 Procedure Requalification. Changes to the ultrasonic inspection procedure within the scope of this section that affect the technical aspect of the procedure shall be approved by the ultrasonic test Examiner prior to use. Changes outside the parameters of this section or a change to a material that is not acoustically similar to that for which the procedure has been qualified shall require requalification of the procedure.

6.5.3 Discontinuity Evaluation. If discontinuities are detected, the search unit shall be directed to maximize the signal amplitude from the discontinuity for evaluation.

6.5.4 Records. Records (see 1.8) of ultrasonic inspection shall contain the following:

a. Description and unique identification.

b. Approved procedure identification.

c. Instrument manufacturer, model number, and serial number.

d. Transducer size and type.

e. Search beam angle.

f. Test frequency.

g. Couplant.

h. Calibration standard number.

i. Acceptance standard used.

j. Date of inspection.

k. Signature(s) of inspector(s).

l. Disposition (accept/reject) of the item inspected.

6.6 TEST METHODS.

6.6.1 Forged, Wrought, and Extruded Material. Tests of forgings, wrought bars, and extruded material shall be made at the same frequency used to calibrate the equipment. Controls shall be set during the calibration and shall not be changed during the production test. Unless otherwise specified, when testing forgings, including ring, rectangular rounded, multi-sided disc or pancake and all wrought bars using longitudinal waves, the calibration criteria of table 6-1 shall apply.

Table 6-1. Calibration Hole Size for Longitudinal Test.

Section Thickness (Inches)	Diameter of Flat Bottomed Hole (FBH) (Inches ±0.005)
Less than ½	1/32
½ to less than 1½	1/16
1½ to less than 2½	3/32
2½ to less than 3½	1/8
3½ to less than 4½	5/32
4½ to less than 5½	3/16
5½ to less than 6½	7/32
6½ and over	1/4

NOTES:

1. All flat bottomed holes shall have bottoms parallel to the entrant or to the tangent of the entrant surface.
2. The calibration standard shall be wide enough to permit sound transmission to the flat bottomed hole without side effects.
3. The calibration standard material shall be acoustically similar and within 1/8 inch of the T_m to be inspected and shall be ultrasonically sound. The surface finish shall be in accordance with 6.3.2 and entrant surface curvature shall be similar to the test specimen.
4. Flat bottomed holes for test standards shall be drilled to a depth of one-half the thickness or 1 inch, whichever is less. A shallower flat bottomed hole may be used as long as the hole can be resolved from the back wall.
5. The test frequency shall be the same as the calibration frequency.
6. The couplant used for calibration shall be the same as that used for inspection.
7. The use of distance amplitude correction curves is permitted for calibration.

6.6.1.1 Ring Forgings.

6.6.1.1.1 Shear Wave Tests of Ring Forgings.

6.6.1.1.1.1 Test Calibration, Shear Wave. The calibration standard for ring forgings with wall thicknesses not greater than 20 percent of the outside diameter shall have two notches cut axially, one on the inside surface and one on the outside surface of the test standard. They shall be located so that their sides are smooth and parallel to the axis of the forging and readily distinguishable individual ultrasonic indications are obtained from each notch. Shear wave inspection shall be performed at 3 percent notch sensitivity. The dimensions of the notch shall comply with table 6-2, except that available V-shaped calibration notches that were fabricated to meet the requirements of MIL-STD-2132 are acceptable for use. Scan until the notch indication from the inside diameter appears at the farthest position to the left at which it is readable. Move the search unit away from the inside diameter notch until the indication from this notch reappears along the horizontal trace. Mark these two positions on the face of the scope. Scan until the notch indication from the outside diameter is produced at maximum amplitude between these two marks. The amplitude of this notch indication shall be marked on the face of the scope. When the test instrument incorporates distance-amplitude controls, it is recommended that they be used where possible to equalize these indication amplitudes to form an ARL of not less than 50 percent of full screen height. If this is not possible, or if the instrument is not equipped with a distance amplitude correction circuit, a distance amplitude curve shall be constructed on the screen with the lowest point at not less than 20 percent full screen height. Ring forgings with wall thicknesses exceeding 20 percent of their diameters cannot be inspected by circumferential shear wave scan where both inside and outside notches must be monitored. Alternate ultrasonic inspection methods for these forgings shall be specified.

6.6.1.1.1.2 Testing, Shear Wave. The entire outer surface shall be scanned circumferentially using the continuous scanning method. Unless otherwise specified, the test shall be performed in two opposing directions. Size and locations of indications in excess of that received from the calibration notches in accordance with table 6-2 shall be marked on the material.

Table 6-2. Calibration Reference Notch Dimensions of Square and "U" Bottom Notch.

Depth (percent of thickness)	3±½ percent or 0.005±0.0005 inch whichever is greater
Width	2 x depth (approximate)
Length	1 inch (minimum)

NOTES:

1. The major plane of all square or "U" bottom notches shall be perpendicular to the entrant surface.
2. The calibration standard shall be wide enough to permit sound transmission to the square or "U" notch without side effects.
3. The calibration standard material shall be ultrasonically sound, as well as acoustically similar and of the same nominal thickness as the material being inspected. The surface finish shall be in accordance with 6.3.2 and curvature shall be similar to the test surface.
4. The test frequency shall be the same as the calibration frequency.
5. The couplant used for calibration shall be the same as that used for inspection.
6. The use of distance amplitude correction curves is permitted for calibration.

6.6.1.1.2 Longitudinal Wave Tests of Ring Forgings.

6.6.1.1.2.1 Test Calibration, Longitudinal Wave. Sound transmission into the ring shall be confirmed by observing the first back reflection obtained from the ring. Sensitivity of the instrument shall be adjusted until the indication from the flat-bottomed hole in the standard is 80 percent of full screen height. The calibration standard shall conform to the requirements of table 6-1.

6.6.1.1.2.2 Testing, Longitudinal Wave. The ring shall be tested using the continuous method by directing the sound beam radially and axially. The axial beam direction scan shall be performed when not restricted by configuration or geometry of the material under test. The first back reflection shall be positioned on the screen to verify sound transmission and any defect indication shall appear between the initial pulse and the first back reflection.

6.6.1.2 Rectangular Forgings.

6.6.1.2.1 Test Calibration, Longitudinal Wave. Sound transmission into the forging shall be confirmed by observing the first back reflection obtained from the forging. Sensitivity of the instrument shall be adjusted until the indication from the specified calibration standard is at 80 percent of full screen height. The calibration standard shall conform to the requirements of table 6-1.

6.6.1.2.2 Testing - Longitudinal Wave. Rectangular forgings shall be tested using the continuous scanning method on surfaces such that three major planes shall be covered. Scanning with the sound beam directed axially shall be performed when not restricted by configuration or geometry of the material under test. The first back reflection shall be positioned on the screen to verify sound transmission. Suspect areas disclosed under these conditions shall be further evaluated from the side opposite to that which was originally inspected to determine maximum flaw signal amplitude.

6.6.1.3 Round and Multi-Sided Forged or Wrought Bars Including Disc or Pancake Forgings.

6.6.1.3.1 Test Calibration, Longitudinal Wave. Sound transmission into the forging shall be confirmed by observing the first back reflection obtained from the forging. Sensitivity of the instrument shall be adjusted until the indication from the specified calibration standard is at 80 percent of full screen height. The calibration standard shall conform to the requirements of table 6-1.

6.6.1.3.2 Testing - Longitudinal Wave. Each bar or forging shall be tested using the continuous scanning method on surfaces such that all major planes shall be covered. For bars, scanning with the sound beam directed axially shall be performed only when specified.

6.6.2 Plate and Sheet.

6.6.2.1 Shear Wave Testing Technique. Shear wave testing shall be performed only when specified.

6.6.2.1.1 Test Calibration, Shear Wave. When specified, shear wave inspection shall be performed to 3-percent notch sensitivity. A calibration reference notch shall be formed in the test surface of the plate being inspected or acoustically similar test piece. An angle beam search unit, capable of transmitting a shear wave at an angle of 45 degrees in the material being tested, and a frequency of 2.25 MHz shall be used. The instrument shall be adjusted to display signals from the reference notch specified in table 6-2 at one-half and full skip distance. The amplitude of the reflected signal from the calibration standard at the half skip distance shall be adjusted to 80 percent of full screen height. The amplitude of the signal from the calibration standard at full skip distance shall be marked on the viewing screen. A line shall be drawn from the peak signal at half skip to the peak signal at full skip distance. Flaws in the plate or sheet being inspected shall be evaluated to the test sensitivity as established by this line.

6.6.2.1.2 Grid Test Procedure. When grid shear wave testing is specified, it shall be performed by scanning one major surface in two directions, causing the sound beam to travel parallel to and perpendicular to the longitudinal axis or direction of rolling of the plate. In the case of square cross-rolled plate, either direction is acceptable. The search unit shall be moved in parallel paths on a 6-inch grid. If an indication is obtained that has an amplitude 50 percent or greater of that established in 6.6.2.1.1, the adjacent area shall be scanned by the continuous scanning method sufficiently to establish the size and location of the discontinuity.

6.6.2.1.3 Continuous Scanning Procedure. When continuous shear wave testing is specified, it shall be performed by continuously scanning one major surface completely in two directions, causing the sound beam to travel parallel to, and perpendicular to the longitudinal axis or direction of rolling of the plate. The search unit shall be moved in parallel paths to accomplish continuous scanning until the entire dimension is traversed. Either full skip or 1½ skip shall be used to insure that both upper and lower surfaces and the entire interior volume are interrogated.

6.6.2.2 Longitudinal Wave Testing Technique.

6.6.2.2.1 Testing Calibration, Longitudinal Wave. A longitudinal wave search unit having a dimension of l inch square or l inch in diameter, operating at a frequency of 2.25 MHz, unless otherwise specified, shall be placed on a defect free area. (A defect-free area is defined as an area that has been evaluated at the highest ultrasonic sensitivity applicable for the test.) The ultrasonic instrument gain shall be adjusted to display the first back reflection at full screen height. This sensitivity level shall be used to evaluate the plate.

6.6.2.2.2 Test Procedures.

6.6.2.2.2.1 Continuous Method. Continuous scan method testing shall be performed by scanning one major surface 100 percent, only when specified.

6.6.2.2.2.2 Static Method. Testing shall be performed by interpreting the instrument display when the search unit has been statically placed at each intersecting grid line on one major surface of the plate. The grid pattern shall consist of not greater than 2-foot squares for all plate and sheet over ½ inch to and including 2½ inches thick. For plates over 2½ inches, the grid

pattern shall be 8 inches square. Grid patterns as specified herein shall prevail unless modified by the contract, order, or material specification. If an unacceptable indication is obtained, the adjacent area shall be scanned in a 1-foot radius circle by the continuous method to determine the extent and magnitude of the defective condition.

6.6.3 Pipes and Tubes.

6.6.3.1 Scanning Technique. Pipe and tube shall be tested, using the continuous shear wave scan method as specified in 6.6.1.1.1.2 for radial type discontinuities extending longitudinally. Transverse discontinuity tests and additional circular tests shall be performed only when and as specified. When specifically invoked, 6.6.1.1.2 shall apply.

6.6.3.2 Test Calibration, Radial Defects Detection. Select a length of pipe or tube of acoustically similar and ultrasonically sound material and the same nominal size as the pipe or tube to be tested for use as a calibration standard. For calibration in testing for radial defects, two notches shall be cut; one on the inside surface and one on the outside surface as specified in 6.6.1.1.1.1. The notches shall be located at least 1½ inches from one end of sample. The notch shall be cut in such a manner that its sides are smooth, radial and extend parallel to each other and to the longitudinal axis of the pipe or tube. Magnitude of the indication for the notches shall be determined by directing sound waves circumferentially toward the notches with the search unit located at a suitable radial arc displacement using not less than one full skip technique where possible (see figure 6-1). If the indications from the inside and outside notches are unequal, small adjustments shall be made in the angle of incidence to equalize them. If the indications cannot be equalized, the smaller indication shall be used as the basis for evaluation.

6.6.3.3 Test, Radial Defects. When testing pipe and tubes, they shall be set with the longitudinal axis in a horizontal position on motorized rollers or other suitable mounting that permit rotation of the pipe or tube about the longitudinal axis. Rotation shall be controlled at a fairly uniform speed, depending upon the repetition rates established for the test unit being employed. In any case, the peripheral speed shall not be greater than the maximum speed at which the calibration standard is rotated for clear definite resolution of the notch being presented. When the immersion method is used, the test conditions shall duplicate calibration conditions especially in regard to keeping the tube bore filled or dry during test. In general, excluding the immersion fluid from the tube bore improves the reproducibility of test results.

6.6.4 Ultrasonic Inspection of Weldments.

6.6.4.1 Scope. This section contains the minimum requirements for the inspection of structural butt, corner, and tee welds to ensure joint integrity as required by specifications, contracts and acquisition documents.

6.6.4.2 General Requirements.

6.6.4.2.1 Application. Requirements are provided herein for the volumetric inspection of butt, corner, and tee welds (see 6.6.4.3). Requirements are also provided for tee welds that are not volumetrically inspected (6.6.4.4). The application shall be as invoked by the primary specification.

6.6.4.2.2 Surface Finish. Welds may be inspected in the as-welded condition, provided the required test sensitivity and inspection coverage can be maintained. The weld reinforcement shall be ground flush to provide a flat surface when ultrasonic inspection is to be accomplished by scanning on the weld surface.

6.6.4.2.3 Limitations. The requirements of this section were developed for the inspection of welded joints in ship hull structures. These joints consist of butt, corner, and tee design in HY-80, HTS and similar materials having thicknesses of ¼ inch and greater. The use of these requirements on other materials, other thicknesses, or other joint designs shall be reviewed for applicability of test sensitivity and technique by the Examiner and demonstrated to the authorized representative of NAVSEA.

6.6.4.2.4 Calibration Standards.

6.6.4.2.4.1 Butt Welds, Corner Welds, Tee Welds for Discontinuities into the Through Member, and Tee Weld Volumetric Inspection. The calibration standards shall be acoustically similar material as that to be inspected, and shall be

ultrasonically sound. They shall be capable of providing constant reference sensitivity levels for all angles of search unit and inspection depth. The standard reflecting surface shall be a 3/64-inch diameter hole drilled through a 1¼-inch wide block. The surface of the test block shall be approximately 125 Ra microinches as compared to surface finish standards. See figure 6-7 for a typical calibration standard. An additional 3/64 inch diameter calibration hole at a depth of ⅛ inch shall be added to the standard for the inspection of flush ground welds.

6.6.4.2.4.2 Detection of Lack of Penetration in Full Penetration Tee Welds. The calibration standard shall be the through member upon which the inspection is being performed.

6.6.4.3 Specific Requirements for Butt and Corner Welds and the Volumetric Inspection of Tee Welds.

6.6.4.3.1 Instrument. The instrument shall have circuitry to provide a continuously increasing amplification with respect to time. This circuitry compensates for the signal losses with depth as a result of sound beam divergence and its attenuation in material.

6.6.4.3.2 Transducers.

6.6.4.3.2.1 Size. The maximum dimension of the transducer's active element shall not be greater than:

a. ½ inch for plate thicknesses less than ½ inch.

b. 1 inch for plate thicknesses equal to or greater than ½ inch.

6.6.4.3.2.2 Frequency. The nominal frequency shall not be less than:

a. 4.0 MHz for plate thicknesses less than ½ inch.

b. 2.0 MHz for plate thicknesses equal to or greater than ½ inch.

6.6.4.3.2.3 Angle. The transducers used for shear wave inspections shall be affixed to suitable wedges designed to induce shear waves in the material at the following recommended angles. The beam angle should be based on the thickness of the plate as follows:

a. For plate thicknesses ¼ to, but not including, ½ inch: a 70-degree angle.

b. For plate thicknesses ½ inch to, but not including, 1½ inches: a 60 to 70-degree angle.

c. For plate thicknesses 1½ inches to, but not including 2½ inches: a 45 to 60-degree angle.

d. For plate thicknesses 2½ inches and over, a 45-degree angle.

e. For tee weld volumetric scanning from the through member, a 45-degree angle.

Other angles may be used to complement or substitute for the angles recommended above to obtain 100 percent coverage when otherwise precluded by configuration, or for the evaluation of indications.

6.6.4.3.3 Calibration. The instrument range and delay controls shall be adjusted to display signals from the calibration holes on the viewing screen for the range of depths to be inspected. The attenuation-correction controls shall be adjusted to compensate for the signal losses due to depth.

6.6.4.3.3.1 Class I Welds. The instrument gain shall be adjusted to peak all signals within the range of test at not less than 80 percent of full screen. The corresponding depth and location of the peaked signals from the calibration standard shall be noted along the base line of the viewing screen. The screen shall be divided by two horizontal lines at 20 percent (the DRL) and 80 percent (the ARL) of full screen height.

6.6.4.3.3.2 Class II and III Welds. The instrument gain shall be adjusted to peak all signals within the range of test at not less than 80 percent of full screen. The corresponding depth and location of the peaked signals from the calibration standard

shall be noted along the base line of the viewing screen. The screen shall be divided by two horizontal lines at 40 percent (the DRL) and 80 percent (the ARL) of full screen height.

6.6.4.3.4 Procedure. The entire weld volume and heat affected zone (½ inch of base metal, see 6.2.16 and figure 6-2) shall be scanned with shear waves by directing the sound beam to detect both longitudinal and transverse discontinuities as described herein. When full coverage of the weld volume and heat affected zone is not possible due to configuration, accessibility, or base metal discontinuity, and alternate NDT methods (if allowed by the specification) are not practicable, limited coverage shall be approved on a case basis by the authorized representative of NAVSEA and documented in the inspection record (except as allowed in 6.6.4.3.4.1.1). Excess weld reinforcement or temporary obstructions shall be removed when practicable to obtain full coverage.

6.6.4.3.4.1 Longitudinal Discontinuities. The search unit shall be placed on the scanning surface with the sound beam directed perpendicular toward the weld. Continuous scanning shall be performed toward and away from the weld, while oscillating the transducer to the left and right with an included angle of approximately 30 degrees in a radial motion. The sound beam shall traverse the entire inspection zone with a two-directional crossing pattern for full coverage (see figures 6-2, 6-3, 6-5, 6-6, and 6-8). Scanning for longitudinal discontinuities in tee welds shall be performed from the through member surface opposite the attached member when practicable.

6.6.4.3.4.1.1 One Directional Coverage. For typical weld joint designs where full two-directional coverage is not practicable, the UT procedure shall identify the scanning requirements to achieve the maximum amount of two-directional coverage possible with a minimum of one-directional coverage (see figure 6-4). Examples of typical joint designs that cannot be inspected with full two-directional coverage are: butt welds where one member is tapered on both surfaces, tee welds that cannot be scanned from the opposite side of the through member, and corner welds with insufficient scanning surface. Instances of one-direction coverage for joint designs not specified in the procedure shall be approved by the Examiner and documented in the inspection record.

6.6.4.3.4.2 Transverse Discontinuities.

6.6.4.3.4.2.1 Butt and Corner Welds Ground Flush. The search unit shall be placed on the ground weld surface with the sound beam directed parallel to the longitudinal weld axis. Scanning shall be performed in two opposing directions, while oscillating the transducer to the left and right, with an included angle of approximately 30 degrees in a radial motion (see figure 6-8). If the weld width exceeds the width of the transducer, continuous scanning shall be performed.

6.6.4.3.4.2.2 Butt and Corner Welds Not Ground Flush. The search unit shall be placed on the base metal surface at the weld edge with the beam directed approximately 15 degrees toward the weld from the longitudinal weld axis. Scanning shall be performed along both edges of the weld from one surface and in two opposing directions (see figure 6-8).

6.6.4.3.4.2.3 Tee Welds Inspected from the Through Member Surface Opposite the Attached Member (Required Method When Accessible). The search unit shall be placed on the plate surface between the weld toes, with the beam directed parallel to the longitudinal weld axis. Scanning shall be performed in two opposing directions, while oscillating the transducer to the left and right with an included angle of approximately 30 degrees in a radial motion. If the distance between the weld toes exceeds the width of the transducer, continuous scanning shall be performed.

6.6.4.3.4.2.4 Tee Welds Inspected from the Attached Member. The search unit shall be placed on the attached member surface at the weld edge with the beam directed approximately 15 degrees toward the weld from the longitudinal weld axis. Scanning shall be performed along the weld edge from two opposing directions. When accessible, both surfaces of the attached member shall be scanned. In addition, when accessible, scanning shall also be performed on the through member surface on each side of the attached member, and in two opposing directions.

6.6.4.3.4.3 Discontinuity Evaluation. If discontinuities are detected, the sound beam shall be directed to maximize the signal amplitude. To determine the length of a discontinuity, the search unit shall be moved parallel to the discontinuity axis in both directions from the position of maximum signal amplitude. One half the amplitude from a point where the discontinuity signal drops rapidly to the baseline shall be defined as the extremity of the discontinuity. At this point, the scanning surface is marked at the position indicated by the center of the transducer. This shall be repeated to determine the

other extremity. Irrespective of the height of the DRL, when the half amplitude signal from the end of the discontinuity as determined by this method is below 20 percent of full screen height, the end of the discontinuity shall be defined where the signal crosses 20 percent of full screen height. The length of the discontinuity shall be defined as the distance between these two marks. The length, depth, position within the inspection zone, and maximum signal amplitude shall be determined and reported for discontinuities yielding signal amplitudes equal to or exceeding the DRL.

6.6.4.3.5 Transverse Discontinuities (Special Case). This procedure shall be used only when specifically invoked. To detect transverse discontinuities, welds shall be in a flush ground or flat-topped (not less than 75 percent of the width of the weld bead) condition, sufficient to permit adequate sound penetration into the weld. An ultrasonic instrument with a calibrated gain control (see 6.5.1.1.4) shall be used. Instrument gain shall be increased over the normal calibration level by 6 dB. Scanning shall be performed as specified in 6.6.4.3.4.2, but with the following modifications: Transducer shall be 2.25 MHz, 60-degree angle (45-degree for T_m greater than 3 inches), with an element size of not greater than ½ inch. For the detection of transverse discontinuities, the indication amplitude must equal or exceed 20 percent screen height while maintaining the transducer orientation within plus or minus 15 degrees of the weld axis. Any indication detected during this scan shall be further evaluated by turning the transducer and scanning as specified in 6.6.4.3.4.1. If this further evaluation does not detect the same indication at a level that equals or exceeds 20 percent screen height, then the indication shall be classified as a suspected transverse crack. Suspected transverse cracks shall be sized for vertical height as specified in 6.6.4.4.2.4 (a) through (c).

6.6.4.4 Specific Requirements for Tee Welds that Are Not Volumetrically Inspected.

6.6.4.4.1 Detection of Lack of Penetration in Full Penetration Tee Welds. This section specifies the requirements to be used for the ultrasonic inspection of tee welds for discontinuities in the root area. The depth of the inspection zone shall be limited to through member plate thickness plus ¼ inch, minus ⅛ inch. The width of the inspection zone shall be limited to the thickness of the attachment member (see figure 6-9). The inspection shall employ the pulse-echo longitudinal wave testing technique.

6.6.4.4.1.1 Search Units. The size of the transducer used for inspection shall not have an active element size greater than ¾-inch diameter or the thickness of the attachment member, whichever is less. The inspection frequency shall not be less than 2.0 MHz.

6.6.4.4.1.2 Calibration. The instrument range and delay controls shall be adjusted to discriminate and indicate signals on the viewing screen from the inspection zone. The sweep line shall be marked indicating through member plate thickness minus ⅛ inch and plate thickness plus ¼ inch. The instrument gain shall be adjusted to peak the first back reflection from the plate adjacent to the weld not less than once each foot along the length of the weld as specified hereafter. The viewing screen shall be divided into three zones with horizontal lines at 20 percent (the DRL) and 65 percent (the ARL) of full screen height. The instrument gain control shall be adjusted so that the peak of the first back reflection coincides with the 80 percent line.

6.6.4.4.1.3 Procedure. The width of the inspection zone, as determined by ultrasonic or mechanical means, shall be located and marked on the test surface. The weld shall be continuously scanned within the width of the inspection zone (see figure 6-9). If a discontinuity is located, the equipment gain shall be recalibrated on the through member plate adjacent to the discontinuity. The search unit shall then be positioned to maximize the discontinuity signal. To determine the length of a discontinuity, the search unit shall be moved along the axis of the discontinuity in one direction from the position of maximum signal amplitude. When the amplitude drops below the DRL, the scanning surface shall be marked at the position indicated by the center of the search unit. This shall be one extremity of the discontinuity. The process shall be repeated to determine the other extremity. The length of the discontinuity shall be the distance between these two marks. The maximum signal amplitude and length of discontinuities within the inspection zone shall be determined and reported for discontinuities yielding a signal amplitude equal to or exceeding the DRL.

6.6.4.4.2 Detection of Discontinuities into the Through Member. This section specifies the ultrasonic inspection requirements to be used for the detection of discontinuities extending into the through member of full and partial penetration tee welds.

6.6.4.4.2.1 Inspection Zone. The depth of the inspection zone shall be from the through member surface into the through member ¼ inch inclusive. The depth of the inspection zone shall be expanded to determine the maximum depth of discontinuities extending into the through member. The width of the inspection zone shall be limited to the thickness of the attachment member plus the fillet reinforcement (see figures 6-10 and 6-11). If the particular configuration to be inspected is not discussed in this document, a method should be used which assures that complete coverage of the inspection zone will be obtained.

6.6.4.4.2.2 Search Units. The maximum dimension of the transducer's active element shall not be greater than 1 inch. The frequency shall not be less than 2.0 MHz. The transducers used for shear wave tests shall be affixed to suitable wedges designed to induce shear waves in the material under test at a specific angle from 45 to and including 60 degrees. Supplemental beam angles may be used for the detection and evaluation of discontinuities.

6.6.4.4.2.3 Calibration. The instrument range and delay controls shall be adjusted to discriminate and indicate signals on the viewing screen from the depth of the inspection zone. The instrument gain shall be adjusted to peak the signal from the calibration hole that is not greater than plus or minus ¼ inch from the through member thickness to not less than 80 percent of full screen height. The corresponding depth and location of the peaked signals from the calibration standard shall be noted along the base line of the viewing screen. The screen shall be divided by two horizontal lines at 20 percent (the DRL) and 80 percent (the ARL) of full screen height.

6.6.4.4.2.4 Procedure. Shear wave scanning for discontinuities into the through member in any tee weld configuration shall be performed as shown on figure 6-11 whenever the surface opposite the attachment member is accessible. If the surface opposite the attachment member is not accessible and the side adjacent is accessible, the scanning shall be accomplished as shown on figure 6-10; however, there shall be no attachments in the area where the reflection of the wave occurs. The entire inspection zone shall be scanned in two directions, as illustrated on figure 6-10 and figure 6-11. Indications from the surface of the far fillet shall be disregarded. The shear wave search unit shall be placed on the scanning surface and directed toward the particular inspection zone. The search unit shall be oscillated to the left and right with an included angle of approximately 30 degrees in a radial motion while scanning perpendicularly toward the inspection zone. Continuous scanning shall be used. When any indication is noted from a discontinuity within the inspection zone, the sound beam shall be directed to maximize the indication. The length, depth, position, and maximum signal amplitude shall be determined and reported for discontinuities yielding a signal amplitude equal to, or exceeding, the DRL. The length of discontinuities shall be determined as specified in 6.6.4.4.1.3. The recorded depth of a discontinuity shall be the minimum and maximum perpendicular distances of the discontinuity from the through member surface. This should be determined in the following manner:

a. Maximize the indication from the discontinuity.

b. For discontinuities extending to a surface, move the search unit toward the discontinuity and record the depth from the viewing screen at which the indication begins to drop rapidly toward the base line.

c. In addition, for discontinuities that do not extend to the surface, repeat the above and move the search unit away from the discontinuity to determine the other limit of depth at the point where the indication again begins to drop rapidly toward the base line.

6.6.4.5 Record of Inspection Results. In addition to the requirements of 6.5.4, records (see 1.8) for reporting inspection results of welds shall contain as a minimum the following information (for suggested forms see figure 6-12):

a. Ship/item identification.

b. Location (frame, side of ship, and so forth).

c. Type of material.

d. Thickness of material.

e. Joint identification.

f. Type of weld joint (weld design).

g. Weld length inspected.

h. Discontinuities that equal or exceed the DRL.

i. If supplemental ultrasonic inspection techniques are used that contribute to the final inspection results, they shall be recorded.

j. If full UT inspection coverage cannot be obtained per the approved procedure, document the location and type of missed coverage, reason and signature to denote case basis approval.

6.7 THICKNESS MEASUREMENTS.

6.7.1 Scope. Variations in wall thickness may be measured by either pulse-echo instruments or resonant frequency instruments, which have been qualified as specified in 6.5.1.2. When using numeric-style digital readouts and the reflecting surfaces are, or are believed to be, rough, pitted, or corroded, an A-scan type display shall be used to verify the digital readings.

6.7.2 Calibration. The instrument shall be calibrated on a set of standards of the same basic material (acoustically similar) as that to be inspected. No less than two standards shall be used—one shall be equal to or less than the minimum acceptable thickness and one shall be equal to or greater than the maximum acceptable thickness (if applicable). As an alternative for materials equal to or greater than 1 inch thick, multiple back reflections from ½-inch or thicker blocks may be used. If the inspection is only to determine minimum thickness violations, then one calibration standard equal to the minimum thickness is allowed. Flat standards may be used on curved surfaces, with the exception that similar curvature standards shall be used when material with a radius less than ½ inch is inspected with a dual element transducer.

6.7.3 Painted/Coated Surfaces. For thickness measurements through paint, a multiple echo technique shall be used such that the thickness measurement is taken by reading between multiple back reflections. Other methods for thickness measurements through paint may be utilized when approved by the authorized representative of NAVSEA.

6.7.4 Method. The number and location of ultrasonic thickness measurements taken shall be as specified in the applicable material specification, fabrication document, or work authorization document. Measurements may be made manually or by automated equipment that meets the requirements of 6.5.1.2.

6.8 BOND TESTING OF WELD DEPOSITED MATERIALS.

6.8.1 Scope. This subsection only describes the requirements for the ultrasonic inspection of the bond of weld deposited material to base material. Specific requirements due to special shapes or manufacturing processes shall be as specified in the appropriate specifications.

6.8.1.1 Method. Inspection of the bond of weld deposited material to base material shall be by the contact method. The transducer may be fitted with appropriate shoes, wedges, or saddles for testing on curved surfaces or at desired angles.

6.8.2 Transducers. Transducers shall not be greater than 1-inch square or 1⅛-inch diameter, and shall operate within a range of 2.25 to 10.0 MHz.

6.8.3 Calibration of Test Equipment. Calibration of ultrasonic test equipment shall be performed on a calibration block to establish adequate sensitivity for testing. The calibration standard shall meet the surface finish requirements of 6.3.2. The calibration standard shall be prepared by weld deposited cladding, pads, or buttering onto a block of the same S-number (or equivalent as defined in S9074-AR-GIB-010/278) base material as the production part. The weld deposited metal used must be of the same A-number as that on the production part to be examined and may be deposited by any approved welding process. In addition, the following requirements in (a) through (g) shall be met (the S-numbers and A-numbers for base metal and weld metal are defined in S9074-AR-GIB-010/278):

a. The microinch surface finish of the calibration standard shall be equal to or greater than the production part to be inspected.

b. The calibration standard base material shall be equal in thickness to the production part base material except that, for thicknesses exceeding 1 inch, the calibration standard base material may be 1 inch or greater. For welding large flat or essentially flat surfaces, a 6-inch square shall be the minimum acceptable size of the calibration block.

c. The weld metal thickness of the calibration standard shall be within plus or minus 25 percent of that on the production part.

d. The transducer contact area of the production part shall be equal to or greater than the transducer contact area on the calibration standard.

e. For convex production surfaces, the calibration standard shall be convex with a radius of curvature equal to or less than the production surface to be examined.

f. For concave production surfaces, the calibration standard may be flat or concave with a radius of curvature equal to or greater than the production surface to be examined.

g. An area of the block approximately 2 inches square shall have the backing material removed, leaving only the cladding. An ultrasonic thickness measurement at 2.25 MHz shall be established in this area, representing unbond. The thickness pattern obtained in the area of integral cladding and base material shall represent good bond and the first clearly visible reflection from the opposite side of the block shall not be greater than full screen amplitude. Calibration shall be obtained with the search unit moving across the surface at approximately the same speed as that to be used during the inspection.

6.8.4 Scanning. Scanning shall be performed manually or automatically by moving the search unit in a directed path or by moving the material in a directed path with the search unit stationary. Scanning shall be performed at a uniform rate of speed determined during calibration, so that any indication relative to the quality of the material shall be detected.

6.8.4.1 Continuous Scanning. Unless otherwise specified in the appropriate specifications, the continuous scanning procedure shall be followed. All testing shall be performed with the search unit in contact with the clad surface. Sound transmission into the base material shall be confirmed by observing the composite thickness pattern as obtained from the good bond area of the calibration standard. When the back reflection is lost due to nonparallel surfaces of the base materials, transmission shall be confirmed by the test specified in 6.8.4.3.

6.8.4.2 Intermittent Scanning. Scanning shall be performed along special paths or on grid lines. The distance between paths or lines shall be as specified in the appropriate specification when the method is required.

6.8.4.3 Calibration for Ultrasonic Testing of Nonparallel Surfaces. Test equipment shall be calibrated with the same calibration standard as specified in 6.8.3. The thickness pattern shall be observed by scanning over the clad surface where the backing material has been removed, and the equipment shall be set to demonstrate a full screen back reflection. Using these settings, the operator shall scan over the composite thickness of the cladding and the backing material and note the normal back reflection from the good bond.

6.8.4.4 Continuous Scanning of Nonparallel Surfaces. Unless otherwise specified in the applicable specifications, each pass across the test surface shall overlap 25 percent of the previous pass until the entire surface has been scanned. The equipment settings established in 6.8.4.3 calibration shall be used.

6.8.5 Marking. When an indication in excess of acceptance standards occurs, the material shall be appropriately marked.

6.8.6 Flaw Plotting. Each defect shall be explored ultrasonically to determine its size. The edge of the defect shall be determined by moving the search unit toward the defect and noting the position of the leading edge of the transducer when the defect first appears. The length of the defect shall be determined by continuing to move the search unit across the defective area and noting the trailing edge of the transducer when the indication disappears. The distance between defects shall be determined by measuring the shortest distance between their edges regardless of indication amplitude at these points.

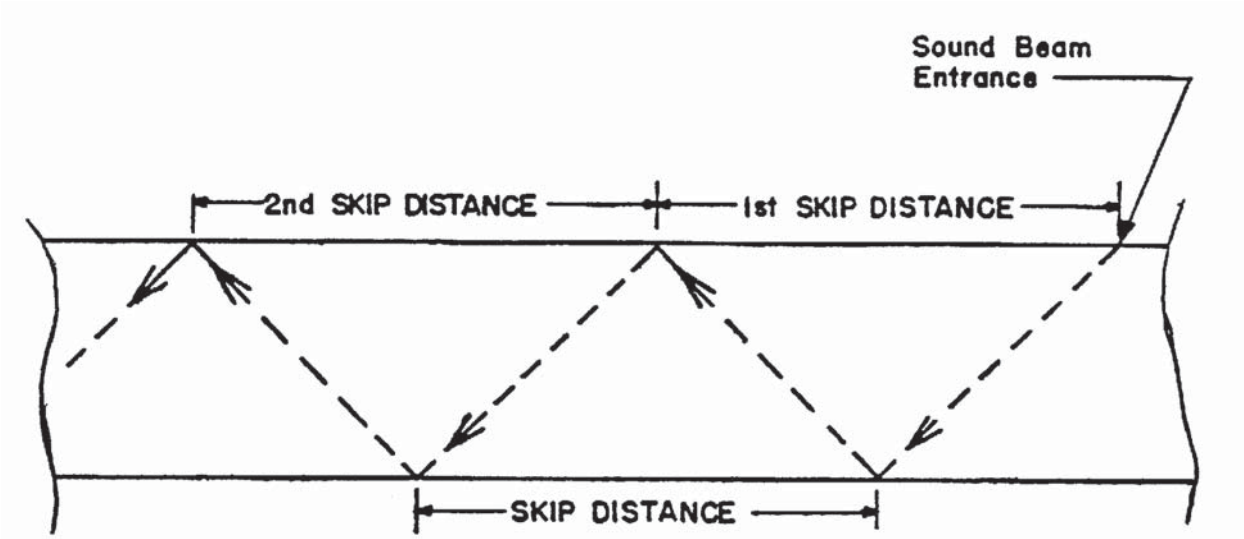

Figure 6-1. Skip Distance Example.

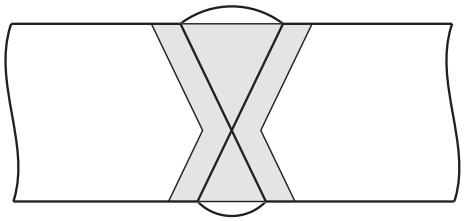

Butt Weld

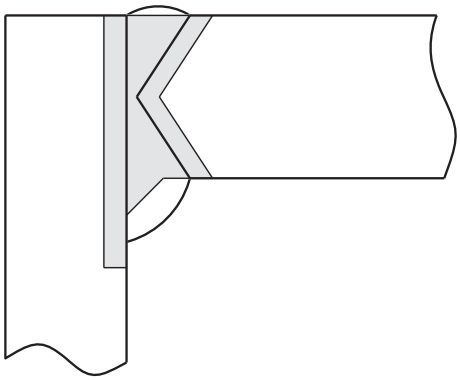

Corner Weld

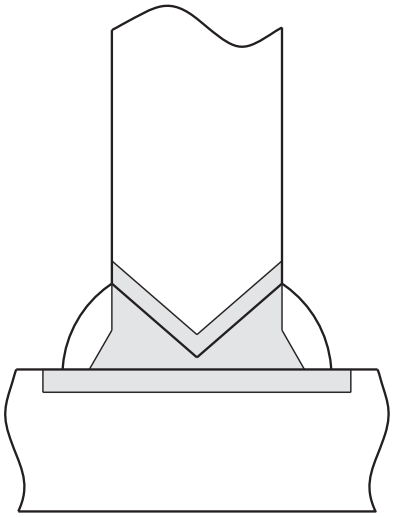

Tee Weld

NOTES:

1. The inspection zone for tee welds and corner welds includes the design fillet reinforcement. The inspection zone for butt welds does not include reinforcement.

2. The inspection zone for tee, butt and corner welds includes the heat affected zone (HAZ) extending ½ inch into the base material, following any applicable bevel angle(s).

Figure 6-2. Inspection Zones for Volumetric Inspection of Welds.

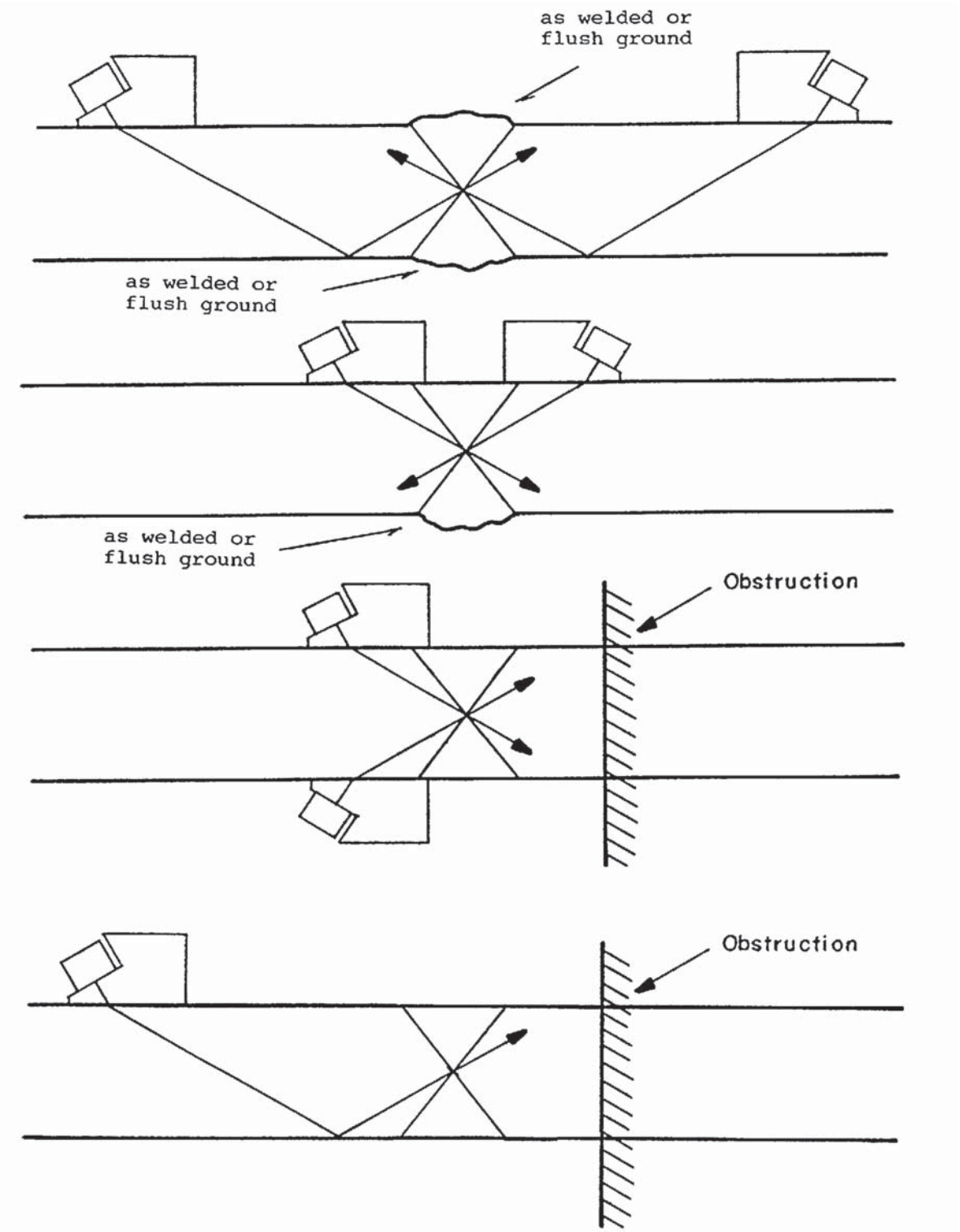

Figure 6-3. Example Full Coverage Scanning Techniques for Butt Welds.

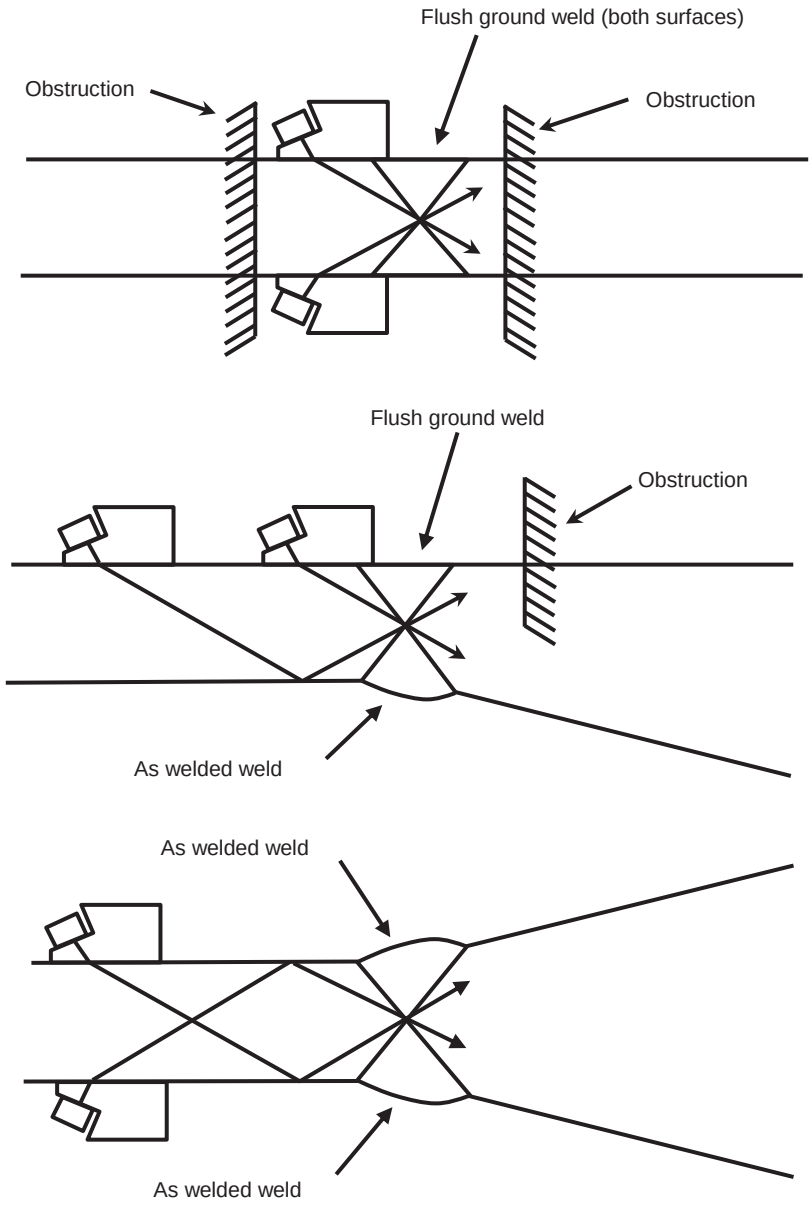

Figure 6-4. Example One-Directional Coverage Techniques for Butt Welds.

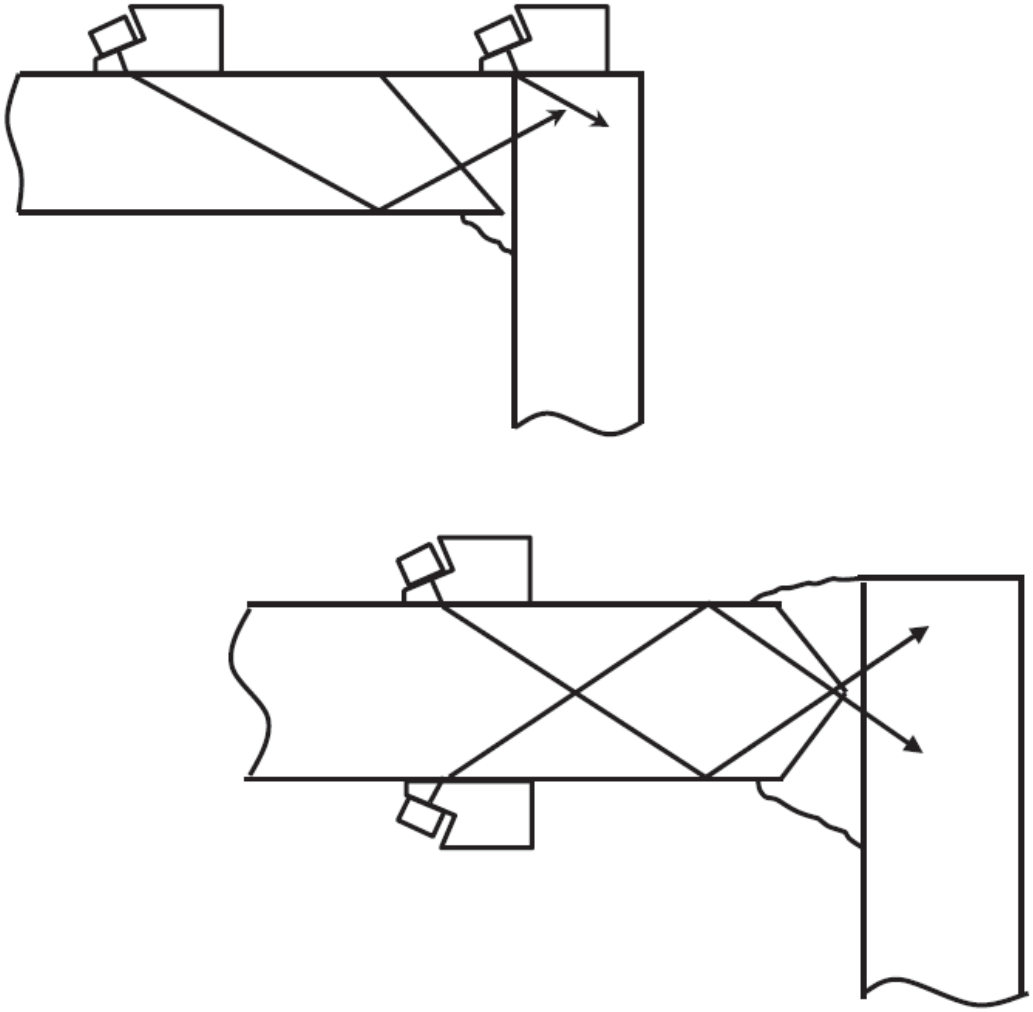

Figure 6-5. Example Scanning Techniques for Corner Welds.

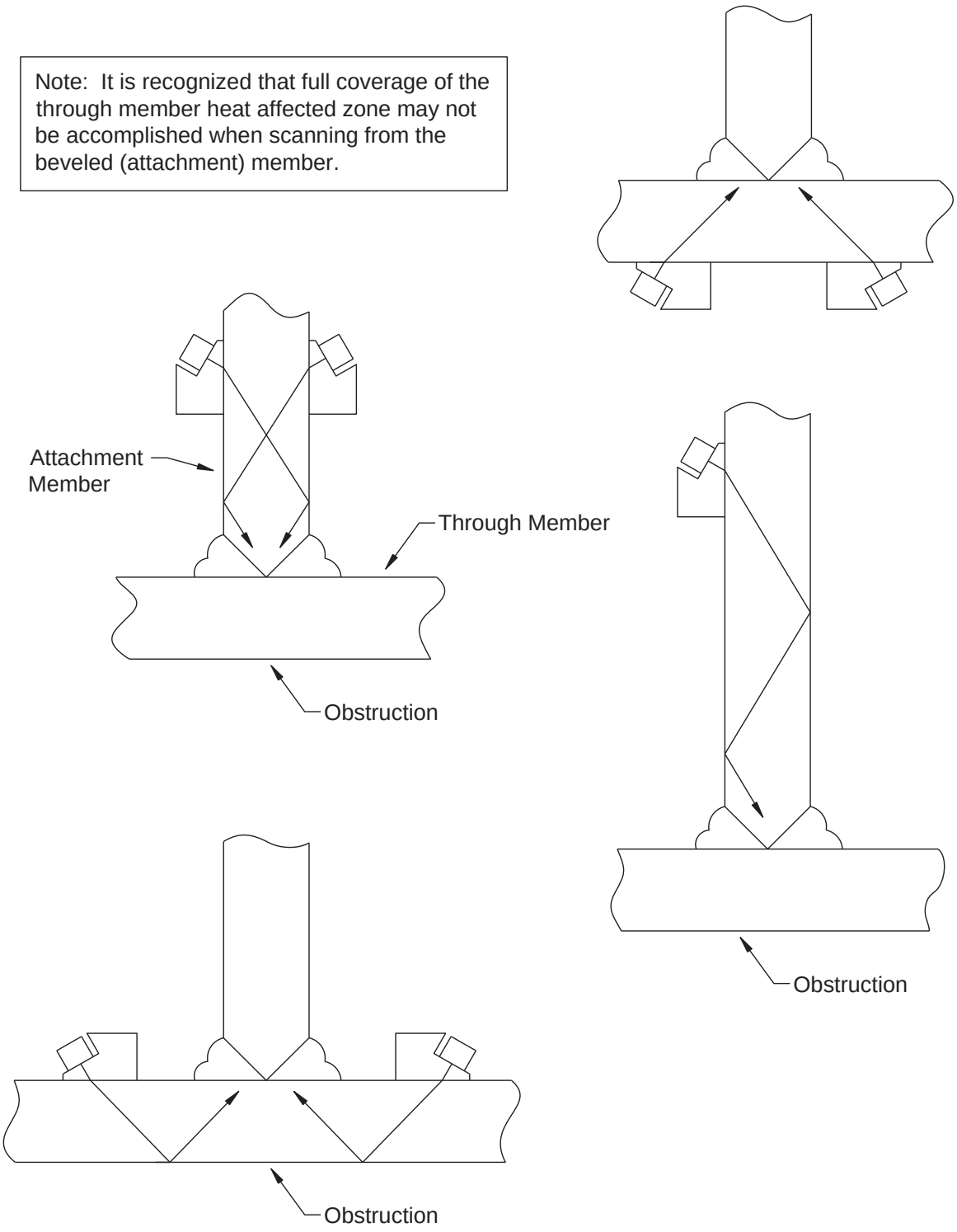

Figure 6-6. Example Scanning Techniques for Tee Welds.

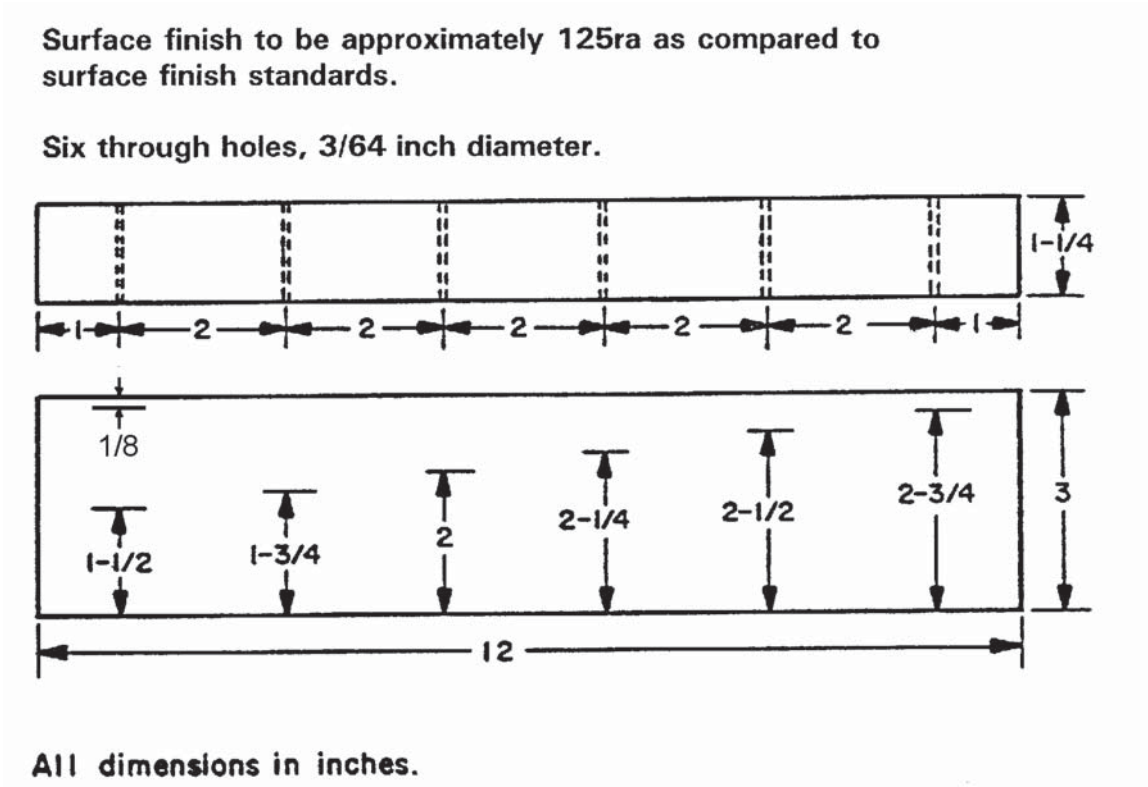

Figure 6-7. Example Reference Calibration Standard (Sensitivity).

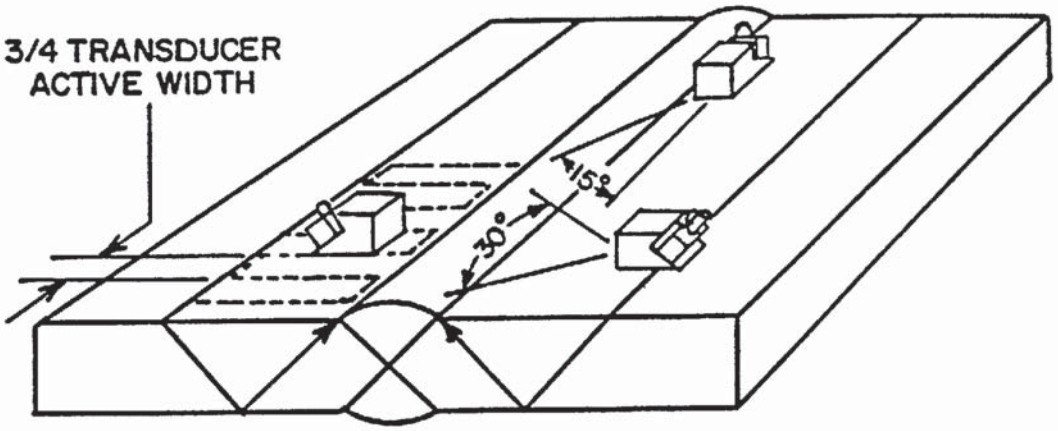

SCANNING PROCEDURES FOR WELDS NOT GROUND FLUSH

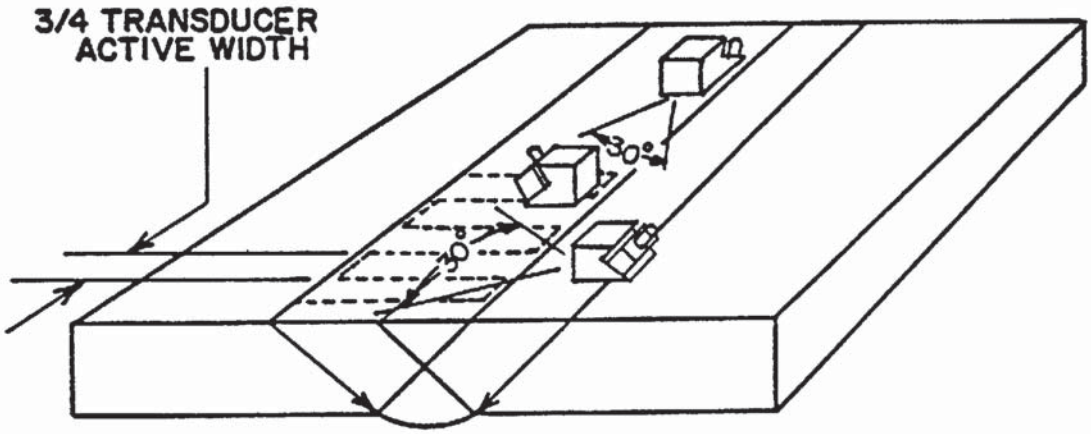

SCANNING PROCEDURES FOR WELDS GROUND FLUSH

Figure 6-8. Scanning Procedures for Welds.

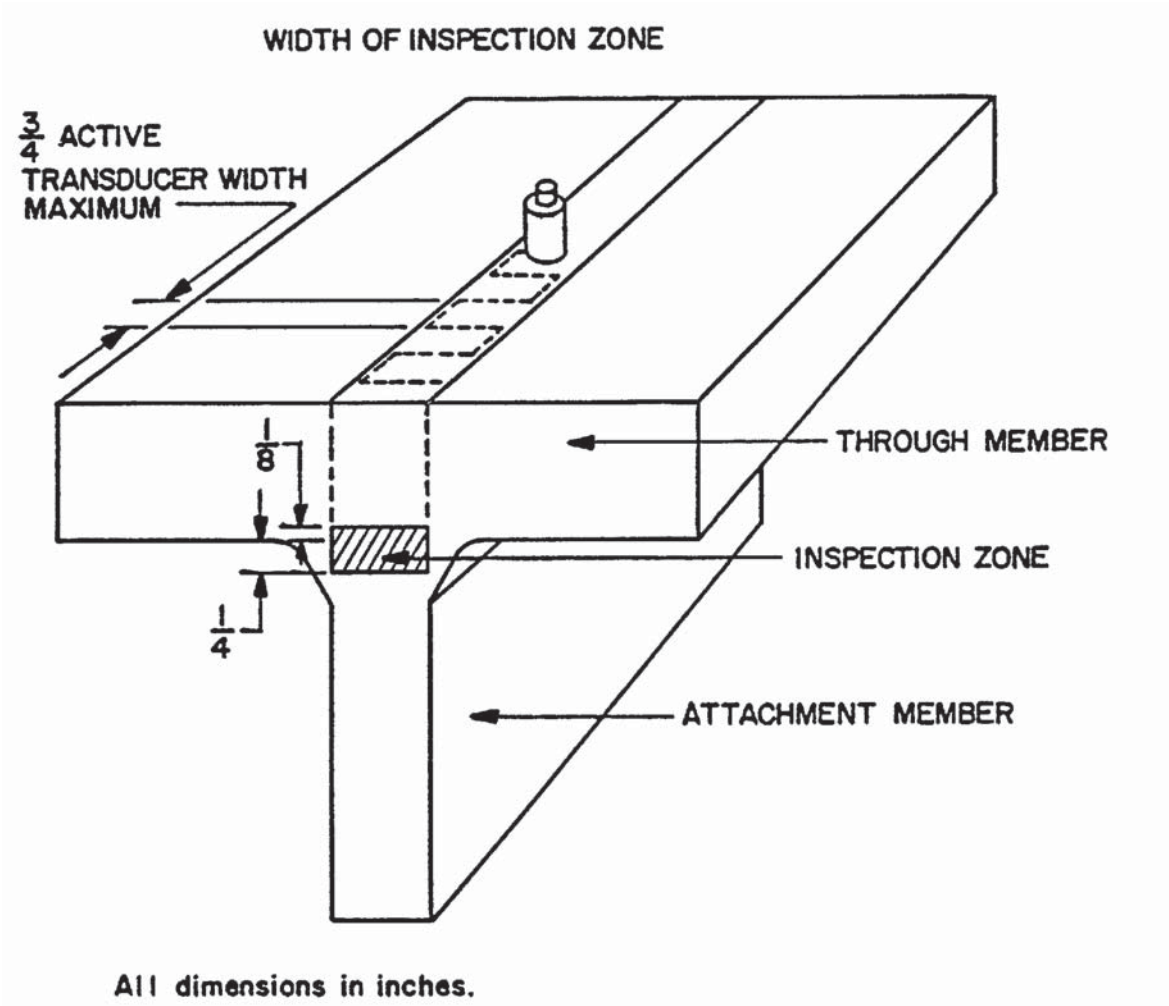

Figure 6-9. Scanning Procedure for Detection of Lack of Penetration in Tee Welds.

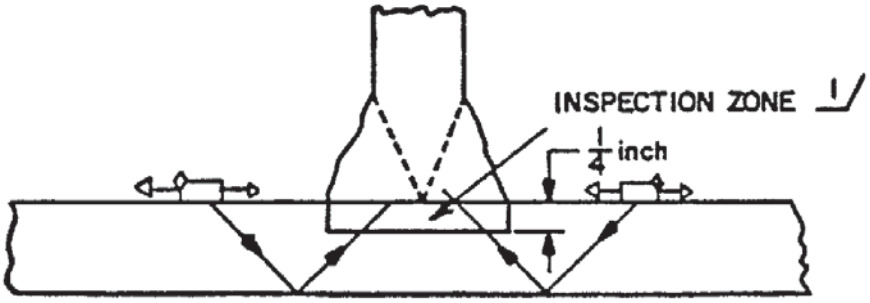

1/ THE INSPECTION ZONE MAY BE EXPANDED AS NECESSARY WITHIN THE PLATE OR WELD. THE SAME SCANNING PROCEDURES MAY BE APPLIED TO PARTIAL PENETRATION TEE WELDS.

Figure 6-10. Surface Opposite Attachment Member Not Accessible.

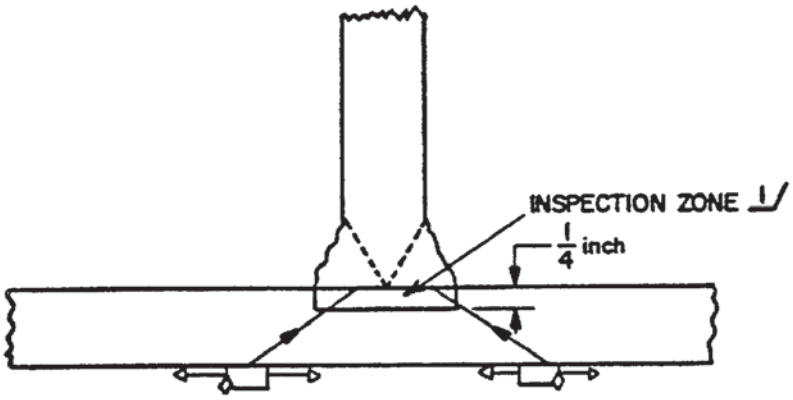

1/ THE INSPECTION ZONE MAY BE EXPANDED AS NECESSARY WITHIN THE PLATE OR WELD. THE SAME SCANNING PROCEDURES MAY BE APPLIED TO PARTIAL PENETRATION TEE WELDS.

Figure 6-11. Surface Opposite Attachment Member Accessible.

ULTRASONIC WELD INSPECTION REPORT

1. SHIP		2. WELD IDENTIFICATION		DISCONTINUITIES								
3. FRAME	4. ☐PORT ☐STBD	5. STATION	6. ☐Bottom centerline ☐Other	7. NO.	Distance 8. From A	Distance 9. From B	10. Length	Depth 11. Min	Depth 12. Max	13. Amplitude	14. Beam Direction	15. Accept or Reject
16. ☐FULL SKIP ☐COMP ☐HALF SKIP ☐OTHER		17. UT IN LIEU OF ☐MT ☐OTHER ☐RT ☐N/A										
INSPECTION SURFACE												
18. ☐ACCEPTABLE ☐UNACCEPTABLE		19. PROBED FROM ☐INSIDE ☐OTHER ☐OUTSIDE										
20. PLATE MATERIAL		21. PLATE THK.	22. WELD WIDTH									
INSTRUMENT												
23. MANUFACTURER & MODEL NUMBER			24. SERIAL NO.									
TRANSDUCER												
25. FREQUENCY	26. SIZE	27. SERIAL NO.	28. ANGLE									
29. COUPLANT		30. CALIBRATION STANDARD NO.										
31. TEST PROCEDURE		32. ACCEPTANCE STANDARD										

33. INSPECTED BY	34. REVIEWED BY	35. DATE	36. WELD LENGTH REQUESTED	38. ☐ ACCEPT ☐ REJECT
			37. WELD LENGTH INSPECTED	

39. WELD JOINT DETAIL ↑☐F (FORWARD, PORT, UPWARD) ☐A (AFT, STARBOARD, DOWNWARD)

SAMPLE

40. REMARKS

Figure 6-12. Typical Ultrasonic Weld Inspection Record.

CHAPTER 7
EDDY CURRENT TESTING

7.1 INTENDED USE.

The inspection process covered is for the detection of surface cracks of ferromagnetic and nonferromagnetic materials. This method may only be used when authorized by the fabrication document, military specification, or other NAVSEA approval.

7.2 DEFINITIONS.

The standard terminology for electromagnetic testing as described in ASTM E1316 shall apply to this section, except as noted below.

7.2.1 Normalize/Normalization. Adjustment of the eddy current system to provide a balanced response in an experimentally determined defect free area.

7.3 EDDY CURRENT INSPECTION REQUIREMENTS.

7.3.1 General Requirements.

7.3.1.1 Method. The overall inspection process shall consist of applying the eddy current test (ET) technique to detect surface cracks in the item inspected.

7.3.1.2 Surface Finish. The inspection surface for the ET scanning does not require removal of nonconductive coatings, for instance paint. The surface shall be reasonably smooth and clean. It shall be free of any substance that might inhibit free movement of the probe along the scan path.

7.3.2 Procedure. Eddy current inspection procedures shall contain, as a minimum, the following information.

a. Material to be tested.

b. Summary of process used.

c. Equipment description.

d. Performance verification description.

e. Surface preparation.

f. Normalization technique.

g. Scanning technique.

h. Evaluation technique.

i. Evaluation criteria.

j. Recording and reporting requirements.

7.3.3 Records. Records (see 1.8) of eddy current inspection shall contain the following:

a. Description and unique identification of item inspected.

b. Approved procedure identification.

c. Instrument manufacturer, model number, and serial number.

d. Probe description.

e. Material type.

f. Acceptance criteria used.

g. Date of inspection.

h. Signatures of inspectors.

i. Disposition of the item inspected.

7.4 EQUIPMENT REQUIREMENTS.

7.4.1 Eddy Current Instrument. The instrumentation shall be capable of signal evaluation by both visual (meter readout) and audio sound pitch variations through connecting headphones, or by an impedance plane storage-type display. For all weld inspections, an impedance plane storage-type display instrument shall be used. The instrument shall provide a means for minimizing or adequately separating the effect of the lift off variable in the evaluation of test results. It shall be capable of detecting the notch in the performance verification reference block being used.

7.4.2 Performance Verification Reference Block. For non-ferromagnetic materials, a block of the same type of material that is to be inspected shall be used. For ferromagnetic materials, a block of material having similar electromagnetic properties (low alloy carbon steels such as HY, HTS, HSLA, etc. are considered similar) as that to be inspected shall be used. The block may be any convenient size provided that it does not present an edge-effect problem. The block shall contain a notch that is 0.015 inch deep, 0.250 inch long, and 0.010 inch wide (maximum dimensions). For the inspection of non-ferromagnetic welds, the reference block shall contain a weld and shall be of the same type of weld metal, same type of base metal and shall represent the same general surface condition (as welded, ground flush, etc.) as the weld being inspected with notches located as follows: one longitudinal notch in the weld metal, one longitudinal notch in the weld toe, one longitudinal notch in the base metal a minimum of ½ inch from the weld toe and one transverse notch in the weld metal.

7.5 STANDARDIZATION.

Prior to inspection, verify the instrument performance using the performance verification reference block. This test shall produce a useable response from the notch(es) in the performance verification block and shall be discernible (in amplitude or phase) from material noise signals. The eddy current instrumentation shall then be normalized on an experimentally determined defect-free area of the item to be inspected. Standardization shall be accomplished at the following times:

a. Immediately prior to starting an inspection.

b. Whenever an inspection has been interrupted by the equipment being turned off or left unattended by the inspector.

c. Whenever the inspector has reason to suspect that conditions affecting the standardization have changed.

d. Not less than once every 4 hours.

e. When the inspection has been completed.

If a standardization check indicates the inspection sensitivity has decreased, all items tested since the last successful standardization shall be reinspected.

7.5.1 Painted/Coated Surfaces. Eddy current inspection shall not be performed through conductive coatings. Eddy current inspection may be performed through non-conductive coatings, but lift off affects due to the coating thicknesses shall

require sensitivity compensation (e.g., through the use of non-conductive shims). The standardization process shall provide a means to ensure that the sensitivity remains consistent between the performance verification reference block and the surface to be inspected, regardless of paint thickness and type. When the non-conductive coating thickness increases to a point where sensitivity between the uncoated performance verification reference block and the coated surface to be inspected can no longer be maintained (see 7.5), the coating thickness shall be reduced before resuming inspection. Inspection of coated surfaces greater than 0.040 inch requires NDT Examiner approval. Inspection procedures that allow inspection of coated surfaces greater than 0.050 inch requires approval by the authorized representative of NAVSEA.

7.6 TEST TECHNIQUE.

Inspection shall be performed such as to avoid rocking or tilting the probe (see figure 7-1 for optimum positioning). Unless otherwise specified, the inspection zone for welds shall include the weld and ½ inch of adjacent base material on each side of the weld, where possible.

7.6.1 Toe of Weld Scan. With the probe oriented to scan parallel to the weld longitudinal axis, scan along each toe of the weld. Ensure that the probe is maintained at a constant attitude to the toe of the weld, keeping the working face of the probe in full contact with the weld. Monitor the weld condition by noting the response on the instrument display.

7.6.2 Weld and HAZ Scan. With the probe oriented to scan parallel to one weld toe and keeping the working face of the probe in full contact with the weld, scan the weld for the desired distance. Repeat this scanning process such that the entire weld and heat affected zone is covered. The weld shall also be scanned in the transverse direction, unless the probe has been verified to be able to detect both longitudinal and transverse indications with one scan.

7.6.3 Inspection of Surfaces Other Than Welds. With the probe oriented at a consistent attitude to the work piece, keep the working face of the probe in full contact with the work piece at all times during scanning. To ensure detection of linear indications having axes in any direction, not less than two separate scans shall be made in each area. The second scan shall be at right angles to that used in the first, unless the probe has been verified to be able to detect both longitudinal and transverse indications with one scan.

7.6.4 Indexing. Each scan of the probe shall be indexed not greater than ⅛ inch from the previous scan. Indexing greater than ⅛ inch may be used when approved by the Government Inspector, provided adequate defect detection for a particular type of equipment and geometry has been demonstrated.

7.7 EVALUATION OF TEST RESULTS.

Evaluate surface conditions by monitoring the signal response produced. Any portions of the item that produce a flaw signal response equal to or greater than the signal response from the notch in the performance verification reference block shall be inspected by magnetic particle inspection (for ferromagnetic materials) or liquid penetrant inspection for (non-ferromagnetic materials). The accept/reject criteria for the magnetic particle/liquid penetrant inspection shall be as established by 1.3. Since not all eddy current signals represent a flaw, local procedures should provide guidance for evaluating flaw signal responses. A flaw signal response would be typical of that from the performance verification reference block. This signal is separated from lift-off and has a quick response time.

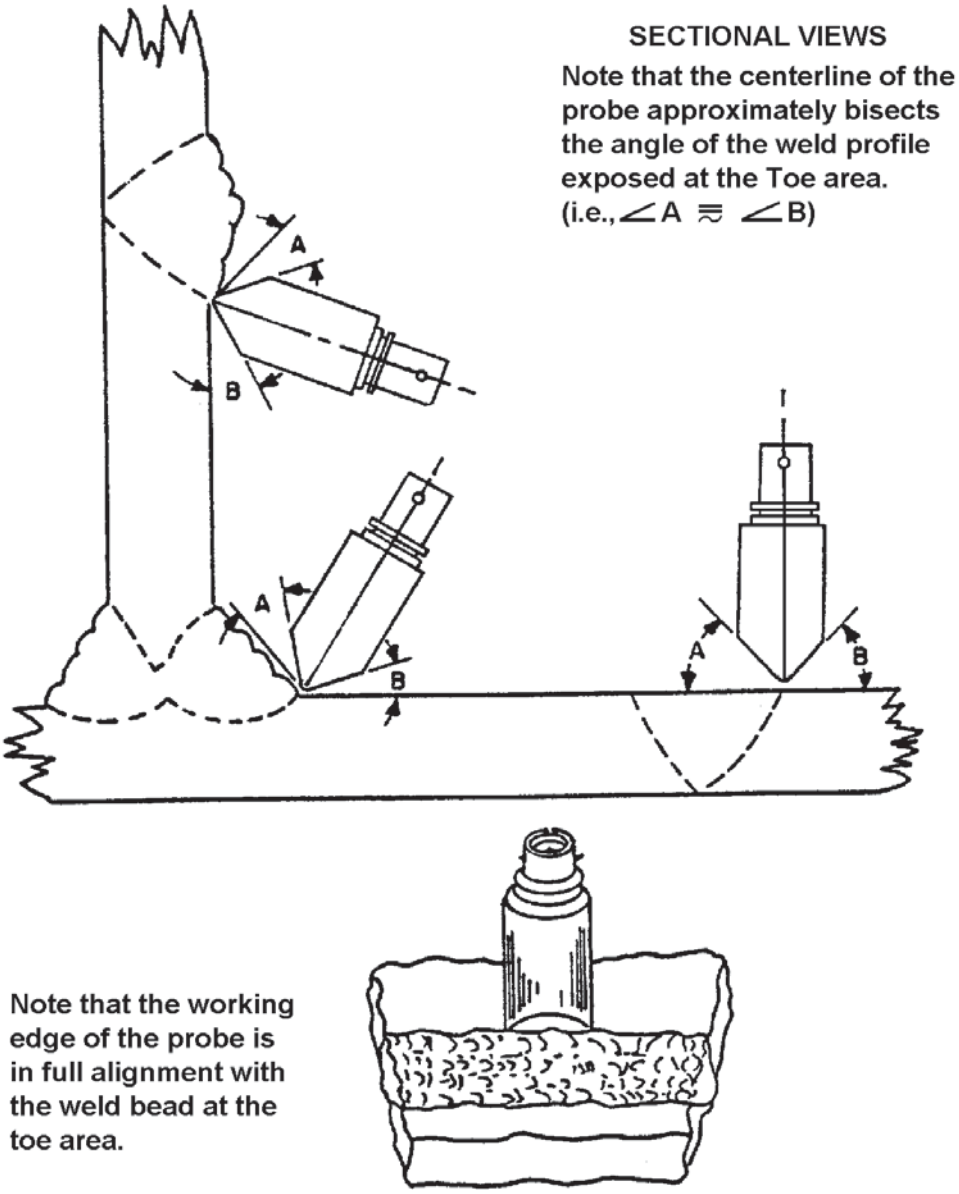

Figure 7-1. Recommended Probe-To-Weld Attitude for Eddy Current Standardization and Scanning Operations.

CHAPTER 8
VISUAL TESTING

8.1 INTENDED USE.

The visual inspection process is to determine that all welds and adjacent base material surfaces comply with applicable procedures, drawings, and fabrication documents. Unless otherwise specified, the inspection zone for welds shall include the weld and ½ inch of adjacent base material on each side of the weld, where possible. For applications other than weld inspection, this section shall only apply if specifically invoked by the base material specification, ship specification, fabrication document and other document invoking this document.

8.2 DEFINITIONS.

The standard terminology for visual examination as described in AWS A3.0 shall apply to this section for welds and adjacent base materials.

8.3 REFERENCE STANDARD.

Visual inspection reference standards, as discussed in this section, refer to those devices that are used as an aid to visual inspection such as workmanship samples and sketches or photographs of welds or surfaces. Each activity shall be responsible for preparation of the reference standards specified in that activity's visual inspection procedure.

8.4 PROCEDURE REQUIREMENTS.

The visual inspection procedure shall contain, as a minimum, the following information:

a. Type of welds or surfaces to be inspected.

b. Specific measuring devices to be used.

c. Visual aids, reference standards, workmanship standards.

d. List of inspection attributes (visual characteristics).

e. Lighting requirements.

f. Acceptance criteria and classification of defects.

g. Record requirements.

8.5 RECORDS.

Records (see 1.8) of visual inspection shall contain the following:

a. Description and unique identification of item inspected.

b. Approved procedure identification.

c. Acceptance standard used.

d. Date of inspection.

e. Signatures of inspectors.

f. Disposition (accept/reject) of the item inspected.

8.6 INSPECTION TECHNIQUES.

Direct viewing (unaided or magnifying glass) shall be used whenever possible. When a remote visual inspection device such as a borescope or video probe is employed for visual inspection, evaluation and acceptance of detected discontinuities shall be based upon comparison against a standard containing a similar defect condition viewed in the same manner and at the same magnification. When magnification is used as an aid to better evaluate conditions detected by direct visual inspection, including 5X, comparison standards are not required. When remote inspection equipment is used for 5X inspections, the equipment shall be verified to provide a minimum of 5X magnification with the proper stand-off distance by direct measurement on screen or by manufacturer's data for the specific equipment used.

8.7 DIMENSIONAL INSPECTION ACCURACY.

Each activity shall ensure that the dimensional inspection techniques, including measuring devices, visual aids, and reference standards, are capable of measuring the specified dimensions of the items under inspection, with the required precision.

8.8 LIGHTING.

The inspection area shall be adequately illuminated for proper evaluation.

CHAPTER 9
NOTES

9.1 SUPERSEDURE INFORMATION.

The following is a comparison of the liquid penetrant classification used in this publication to that used in MIL-STD-271F. Footnotes below show classification differences in the previous revision of this document.

Designation in MIL-STD-271F	Designation in this version
Group I	Type 2 [1/], Method C, Form e [3/]
Group II	Type 2 [1/], Method B or D, Form a, b, c, or e [3/]
Group III	Type 2 [1/], Method A, Form a, b, c, or e [3/]
Group IV	Type 1 [2/], Level (any), Method A, Form a, b, c, or d
Group V	Type 1 [2/], Level 2, Method B or D, Form a, b, c, or d
Group VI	Type 1 [2/], Level 4, Method B or D, Form a, b, c, or d
Group VII	Type 1 [2/], Levels 3 and 4, Method C, Form d

NOTES:

[1/] Type II in previous revision of this document.

[2/] Type I in previous revision of this document.

[3/] Form d in previous revision of this document.

APPENDIX A
COMPUTED RADIOGRAPHY REQUIREMENTS FOR THE DETECTION AND MEASUREMENT OF PIPE CORROSION AND EROSION

A.1 SCOPE.

This appendix provides requirements for the use of computed radiography (CR) to detect and measure corrosion and erosion in pipe and piping system components. The requirements are applicable to both insulated and non-insulated pipe. These requirements are applicable to the use of tangential side wall techniques to measure remaining pipe wall thickness. The use of pixel intensity based techniques (such as contact shots on large diameter heavy wall thickness pipe) to measure pipe wall thickness shall not be performed to generate a quantified wall thickness measurement. Pixel intensity may be used to qualitatively identify where additional tangential exposures should be acquired.

A.1.1 Supplemental Requirements. The requirements in this appendix are supplements to the film based radiography requirements in Chapter 3. All requirements in Chapters 1 - 3 are invoked for compliance unless otherwise revised or addressed in this appendix.

A.1.2 CR Guidance/Tutorial/Definitions. ASTM E2007 includes useful definitions, tutorial and guidance on the CR process and may be used as a guide in the establishment of the inspection activity's process, training program, and procedure.

A.1.3 CR Limitations. The techniques developed in accordance with this supplement shall not be applied if localized pitting or material loss prevents clear identification of the ID/OD boundary. The qualification report shall identify under what conditions the measurement is valid (e.g., filled or unfilled piping).

A.2 INSPECTION PROCEDURE.

All inspections shall be performed in accordance with a written procedure that meets the procedure requirements of Chapters 1 - 3. In addition to the radiographic testing procedure requirements in Chapter 3, the CR procedure shall also include the following:

a. CR system manufacturer/model.

b. CR system maximum resolution (pixels/mm).

c. CR scanner gain and data mapping settings.

d. Acquisition/processing/analysis software identification and version.

e. Inspection monitor manufacturer/model, display format, pixel pitch, and diagonal view dimensions.

f. Display bit depth, gray mapping type, limits, and allowable inspector adjustments.

g. Background illumination requirements for electronic viewing area.

h. Imaging plate manufacturer and series.

i. Filter and screen materials, thicknesses, and placement (e.g., source outlet, outside cassette, inside cassette).

j. Digital image processing methods and analysis techniques employed.

k. Requirements to determine if sufficient contrast exists at edge of pipe wall.

l. Requirements to determine if reference standard is properly located and oriented.

m. Minimum exposure and/or minimum pixel value requirements.

n. Digital image file requirements and requirement to convert file to Digital Imaging and Communications in Medicine (DICOM) or Digital Imaging and Communications in Nondestructive Evaluation (DICONDE).

o. Image archiving requirement, including software/hardware requirements to review archived files.

p. Digital image archiving media requirements (e.g., magnetic, optical or flash).

A.2.1 Procedure Qualification. The procedure qualification should include qualification data from representative pipe sections at the upper and lower limits of the applicability of the procedure. As a minimum, this qualification shall include the smallest diameter and thinnest and thickest pipe wall thickness as well as the largest diameter and thinnest and thickest pipe wall thickness within the scope of the procedure. The procedure qualification shall be performed with the maximum insulation thickness to be inspected. The type of insulation does not need to be part of the qualification. The maximum insulation thickness to be inspected may be different for different pipe sizes and shall be documented as part of the scope of the procedure. Representative areas of inside diameter (ID) and outside diameter (OD) corrosion, including areas at least as thin as 25 percent remaining nominal wall thickness, shall be included in the qualification. Test pieces shall include representative samples with natural or prototypically simulated defects. If different radiation sources or X-ray energies are allowed by the procedure, the procedure qualification shall include the qualification of each source at the upper and lower limit of the pipe size and wall thickness for each type radiation source or X-ray energy. The results of the procedure qualification shall demonstrate the ability to accurately measure actual pipe thickness of the qualification test sample exposure within 5 percent of the nominal full pipe wall thickness, or 0.005 inch, whichever is greater.

A.2.2 Procedure Approval. The inspection procedure shall be approved by the inspection activity's NDT Examiner. Documentation of the procedure qualification and a copy of the NDT Examiner-approved CR procedure shall be provided to NAVSEA 05P2 for information prior to implementation. NAVSEA 05P2 shall be notified at least thirty days prior to the inspection activity's first application of the procedure such that a NAVSEA representative has the option to witness the initial implementation.

A.3 COMPUTED RADIOGRAPHY EQUIPMENT.

The CR system shall be qualified and maintained under a documented CR system qualification procedure that shall be submitted to NAVSEA for information with the procedure in A.2.2. The procedure shall include details of periodic and specific equipment checks and specified intervals to ensure consistent system performance. The periodic equipment checks shall include the key attributes and equipment functions that are most likely to change over time and could affect measurement accuracy (e.g., imaging plate degradation/damage, scanner alignment, etc.). Records of the qualification shall be maintained by the inspection activity.

A.4 COMPUTED RADIOGRAPHY PERSONNEL REQUIREMENTS.

Inspection personnel shall be qualified and certified in accordance with a T9074-AS-GIB-010/271 personnel program. The requirements shall be documented in the inspection activity's written practice and shall include the minimum training, testing and experience requirements in CR for each level of certification. The written practice may include different requirements for personnel previously qualified using film-based radiography versus new CR inspectors. The CR qualification and certification shall require training, testing and experience specifically in CR. A copy of the written practice shall be provided to NAVSEA for information prior to implementation.

A.5 COMPUTED RADIOGRAPHY TECHNIQUE REQUIREMENTS.

A.5.1 Reference Standards. A reference standard with known dimensions shall be included in each exposure to calibrate each particular exposure as a result of geometric enlargement. The specific style and details of the reference standard may be selected by the NDT Examiner but must be defined in the procedure and used during procedure qualification. The calibration dimension on the reference standard shall be at least as large as the nominal pipe wall thickness of interest. Common reference standards include ball bearings, solid rods, and pipe segments with machined features.

High density metallic foils may be used to wrap the reference standard to minimize radiation undercutting at the edge of the reference standard. If high density masking material is used during the procedure qualification, then similar masking must be used during production testing.

A.5.2 Reference Standard Location. The reference standard shall be located at the same distance from the radiation source and imaging plate as the pipe wall of interest (the tangent of the pipe insulation). The reference standard shall be aligned such that the curved surface of the reference standard is oriented with respect to the X-ray beam in the same direction as the curved surface of the pipe. The procedure shall include requirements for the amount of reference standard misalignment and location error permissible and still provide for a qualified thickness measurement. Reference standard location error is evidenced by the image of the reference standard in the insulation.

A.5.3 Minimum Source to Imaging Plate Distance. The minimum source to imaging plate distance shall be five times the nominal pipe diameter. When accessibility does not permit the minimum source to imaging plate distance, the greatest possible source to imaging plate distance shall be used and reported to the NDT Examiner for disposition. For each specific case, the NDT Examiner shall determine whether the exposure is still feasible and of sufficient accuracy. A statement summarizing the limited accessibility condition and impact of the condition on the accuracy of the pipe wall measurement shall be annotated in the inspection report. Alternatively, the NDT Examiner may include predefined limits of shorter source to imaging plate distance in the inspection procedure. These conditions shall still be annotated in the inspection report.

A.5.4 Source/Imaging Plate Alignment. The imaging plate cassette shall be in contact with the insulation whenever possible and aligned perpendicular to the axis between the source and the region of interest and parallel to the axis of the pipe. The source shall be centered at the midwall of the insulation thickness such that the geometric enlargement is the same for the pipe wall and the reference standard (see figure A-1). Other source locations will result in inaccuracies in the pipe wall measurement due to the different level of geometric enlargement between the reference standard and the pipe wall of interest. This error includes measurements made along the pipe axis as well as measurements of the other pipe wall when the entire pipe diameter is imaged on the same imaging plate. Other source alignments, such as centering the source over the pipe with a reference standard adjacent to each wall to evaluate both walls at once, may be used as long as they are documented in the procedure and qualified during the procedure qualification. Specific cases where these source alignment requirements cannot be met shall be reported to the NDT Examiner for disposition. The NDT Examiner instructions of whether the exposure is still feasible and a statement summarizing the impact of the condition on the accuracy of the pipe wall measurement for each specific case shall be annotated in the inspection report. Alternatively, the NDT Examiner may include predefined limits of misalignment and imaging plate to insulation contact in the inspection procedure. These conditions shall still be annotated in the inspection report.

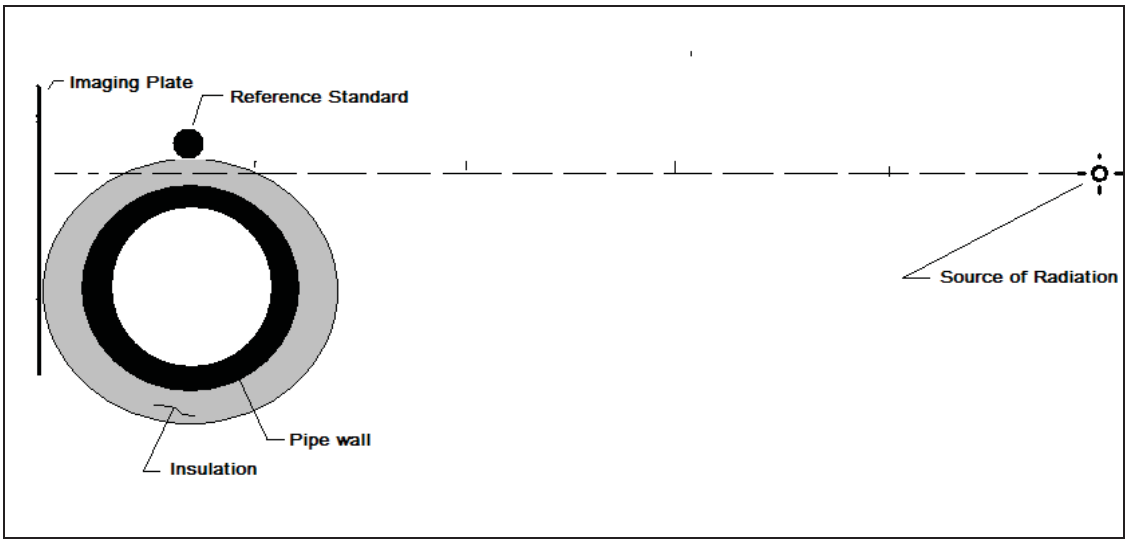

Figure A-1. Alignment of Radiation Source and Imaging Plate.

A.5.5 Radiographic Contrast. The inspection procedure shall include specific direction to determine whether an exposure has sufficient radiographic contrast at both the inner and outer pipe wall edges to result in a reliable measurement. The requirement shall be based on quantitative pixel value measurements on each edge of the pipe wall edge image, or alternatively, the procedure shall include specific direction and example images to use as direction to the inspector as to

whether the contrast is sufficient. Since the pipe edge image contrast will also be degraded with fluid in the pipe and when corrosion product exists on the pipe surface, the procedure shall also address these conditions. The procedure shall define the sequence of image processing and enhancement (window and leveling, edge enhancement filters, etc.) to be applied to generate the wall thickness measurement. This same sequence shall be applied to obtain the known reference standard measurement exposed in the same image.

A.5.6 Exposure/Pixel Value. The unprocessed image pixel values must be mapped so that smaller pixel values correspond to lower X-ray dose and larger pixel values correspond to higher X-ray dose. Imaging plate exposure shall be sufficient to expose an area in the inside diameter pipe region to a pixel value of at least 10 percent of the maximum pixel value or 1024 pixel counts, whichever is less. The maximum pixel value will depend on the bit depth of the CR system. The maximum pixel value in the measurement region adjacent to both the inside and outside diameter of the pipe wall shall not exceed 95 percent of the system maximum pixel value (saturation).

A.6 INADVERTENT RADIOGRAPHY.

For the purposes of CR inspection of piping systems for corrosion/erosion, inadvertent radiography is defined as the presentation of welds captured incidental to pipe and fitting CR imaging.

All welds that are inadvertently imaged during corrosion/erosion inspections using CR shall be evaluated by the Level II Inspector to the maximum extent practicable from the given image. Discontinuities shall be evaluated as follows:

a. Cracks and crack-like indications shall be rejected.

b. Discontinuities in S9074-AR-GIB-010/278 Class P1 pipe welds shall be evaluated in accordance with MIL-STD-2035 Class 1 weld inspection requirements.

c. S9074-AR-GIB-010/278 Class P2 pipe welds shall be evaluated for incomplete penetration (IP) and incomplete fusion (IF). The Level II Inspector shall notify the NDT Examiner when IP or IF appears to extend into the weld or when associated with corrosion or erosion. An Engineering Evaluation, as defined in MIL-STD-2035, is required when the Level III Examiner determines that corrosion or erosion is associated with IP/IF or when the thickness of the weld metal is reduced by 25 percent or more as a result of the IP/IF.

A.7 RECORDS.

CR radiographic records shall contain the following as a minimum:

a. The radiographic records required by Chapter 3 apply to CR.

b. Each inspection image file shall be traceable to the identification of the original software manufacturer and version used to perform the original production inspections. Each CR storage media (optical, magnetic drive, flash, etc.) shall be permanently marked with the manufacturer and version of the review and archiving software platforms used to perform the original production inspection.

c. The inspection records and image files shall be provided to the customer. The format of the image files shall be such that they can be viewed and manipulated with a minimum capability of zoom, brightness, contrast and ability to measure pipe wall thickness using an embedded limited version of the CR system vendor’s software and a generic Microsoft Windows compatible computer.

d. The inspection activity shall maintain copies of all inspection records (hard copy or electronic) for the time period specified in the fabrication document requirements. In addition, all original electronic data files, including a backup data file, shall be maintained. The electronic data shall be such that the data can be re-evaluated with the original or updated compatible software for a period of at least 5 years.

APPENDIX B
REQUIREMENTS FOR ULTRASONIC CHARACTERIZATION AND SIZING INSPECTION OF EMBEDDED AND SURFACE CONNECTED DISCONTINUITIES

B.1 SCOPE.

This appendix provides the requirements and describes the techniques for ultrasonic characterization and through-wall dimensioning of embedded and surface breaking discontinuities in the T_m range of 0.25 inch to 4.5 inches. This process is only applicable to evaluating single discontinuities in wrought ferrous base metals and low alloy steel welds.

B.1.1 Certification. In addition to the basic certification requirements specified in Chapter 1, nondestructive test inspectors and Examiners employing ultrasonic characterization and crack tip diffraction sizing techniques (UTCS) shall be trained and certified at a NAVSEA approved facility. Inspection personnel shall have a minimum of three years shear wave experience prior to certification. An approved facility must have training and test mock-ups with cracks similar to the defects in the component under evaluation. In addition, all inspection personnel are limited to performing UTCS on components/configurations on which they have been tested/certified. The extent of certification shall be specified on the certification record. Inspectors or Examiners involved in the performance of ultrasonic characterization and sizing inspections shall be recertified with a practical examination if they have not performed these inspection techniques for a period of more than 6 months.

B.1.2 Procedure. Ultrasonic characterization and sizing procedures shall be approved by NAVSEA. Procedures used to implement these inspection techniques shall be qualified on samples that contain either service-induced or artificially induced cracks. Additional techniques, not described herein, shall require NAVSEA approval.

B.2 DEFINITIONS.

B.2.1 Absolute Arrival Time Technique (AATT). The absolute arrival time technique (AATT) uses tip signals from 45, 60, and 70-degree angled shear waves and high-angle longitudinal waves for sizing planar discontinuities. The half-skip AATT technique is used to evaluate all discontinuities when possible.

B.2.2 Collateral Echo 1 (CE-1). The signal resulting from a shear wave which is mode converted to a longitudinal wave on the back surface of a component and then reflected from a discontinuity or notch face back to the search unit as a longitudinal wave.

B.2.3 Collateral Echo 2 (CE-2). The signal resulting from an indirect shear wave which is mode converted to an ID creeping wave on the opposite surface of a component, reflected from a discontinuity or notch face, and mode converted back to a shear wave.

B.2.4 Creeping Wave. A creeping wave is a longitudinal wave traveling nearly parallel to and along the metal surface. It can be generated on the probe-side surface of a material through the use of a high angle (usually 70 degrees or higher) longitudinal wave designed wedge. A creeping wave can also be generated on the surface opposite the probe through mode conversion of approximately 33-degree shear waves impinging on the back surface. Specialized transducers and wedges specifically designed to generate creeping waves are used for sizing applications.

B.2.5 Echo Dynamics. The manner in which ultrasonic signals travel, peak, and diminish relative to transducer movement as the sound beam travels along a discontinuity.

B.2.6 High-Angle Longitudinal Wave (HAL)Technique. The high-angle longitudinal wave technique is used to size discontinuities that are within ½ inch of the inspection surface. The HAL technique is an AATT that makes use of high-angle longitudinal waves to locate the discontinuity tip. This method measures the remaining ligament of material above the discontinuity.

B.2.7 Planar Discontinuity. Discontinuities, such as cracks, incomplete fusion or incomplete penetration that exhibit two-dimensional characteristics and have vertical height through the material.

B.2.8 Specular Reflection. A specular reflection is a direct reflection from any discontinuity.

B.2.9 Tip Signal. Energy generated from the sound beam that is diffracted from the tip of a planar discontinuity.

B.2.10 Volumetric Discontinuity. Embedded discontinuities, such as slag or porosity that exhibit three-dimensional characteristics (usually globular) and are typically not surface connected.

B.3 EQUIPMENT.

B.3.1 Ultrasonic Instrument. The ultrasonic inspection instrument shall be of the pulse-echo, A-scan type. The ultrasonic instrument shall meet the basic instrument qualification requirements specified (see 6.5.1.1). The instrument shall have the ability to correct for depth and surface distance when evaluating discontinuities on curved components if calibrations are performed on flat standards.

B.3.2 Transducers. Straight beam and angle beam transducers used for characterization and sizing shall have a frequency range of 2.25 MHz to 10 MHz and beam angles of 45, 60, 70, and 80 degrees. The tolerance for each shear wave angle is ±3 degrees. The use of frequencies or beam angles outside this range shall require NAVSEA approval. When shear wave transducers are used, the actual beam angle shall be determined and used for all dimensioning calculations.

B.3.3 Calibration Blocks and Reference Standards. Calibration standards shall be machined from the same material type or from acoustically similar material as defined in 6.2.1. The calibration standard shall contain notches that cover the full range of thickness being evaluated. Flat standards may be used on all diameters provided the UT instrument has a built in function for curvature correction. If curvature correction is not available, calibration standards shall have the same radius within 5 percent of the material being examined. Calibration standards for the 30-70-70 ID creeping wave sizing technique shall have approximately the same thickness as the piece being inspected.

B.3.4 Couplant. Couplant shall be in accordance with 6.3.4.

B.4 CALIBRATIONS.

B.4.1 Calibration. The instrument shall be calibrated as required over the full range of component thickness. For longitudinal and shear wave transducers, tip signals from the calibration notches shall be calibrated to 50-60 percent full screen height. Tip signals are typically low amplitude and require additional gain. The gain may be increased from 6 to 14 dBs for exploring and evaluating discontinuities. Gain settings above +14 dB are not allowed without NDT Examiner approval.

B.4.1.1 Curved Surfaces. When inspecting welds where the material is curved in the direction of the sound beam, discontinuities will be measured deeper on the instrument CRT screen and digital depth than they are actually located. When calibration is performed on flat calibration blocks, electronic curvature correction shall be used to correct for discontinuity depth and projected distance. The curvature correction shall be turned off when calibration of the instrument is performed on flat calibration blocks. Once the calibration is complete, the curvature correction shall be programmed as applicable, and verified by comparing the digital depth reading of a notch in the flat calibration block to a “check” value supplied by the cognizant NDT Examiner for the particular radius and transducer angle being used.

B.4.2 Calibration Interval. Calibration shall be verified prior to scanning and at the completion of the inspection. A field standard that includes intermediary reflectors may be used in lieu of a complete calibration check when performed at least once every 4 hours during the inspection, at any change of equipment (instrument, search unit, cable, etc.), or whenever the calibration is in doubt. If the calibration check indicates that a reading is more than 10 percent of the true value or 0.050 inch, whichever is less, from the original calibration reading, the equipment shall be recalibrated and all components inspected since the last valid calibration shall be re-inspected.

B.5 PREREQUISITES.

B.5.1 Inspection Area. The area requiring sizing and characterization inspection shall be established from prior ultrasonic detection inspections. The original inspection report shall be reviewed and the same ultrasonic detection procedure should be utilized to confirm the presence of the discontinuity prior to ultrasonic characterization or sizing inspection. The same or similar equipment shall be used for the verification inspection. Ultrasonic sizing inspection should only be applied after the ultrasonic characterization evaluation has been completed. Ultrasonic characterization is performed to determine if reported discontinuities are volumetric or planar in nature, and to disposition the type of discontinuity (for example, thinning, corrosion, lamination, inclusion, etc.).

B.5.2 Recommended Practice. The nature of the discontinuity requires the use of multiple techniques to accurately characterize and size. No one technique is best for sizing all discontinuities. Whenever possible, the discontinuity shall be evaluated from all sides and verification of the discontinuity characterization and through wall dimension shall be confirmed using more than one technique.

B.5.3 Surface Preparation. The inspection surface shall be free of paint, grease, dirt, or any other material that might interfere with scanning. Surfaces to be inspected shall have a finish of not greater than 250 Ra microinches. Surface waviness shall not interfere with search unit contact. Weld crowns may need to be ground or removed to permit transducer access for discontinuity characterization and sizing.

B.5.4 Scanning. The inspector shall select areas along the length of the discontinuity to be sized in order to obtain a profile and to aid in identifying the deepest point.

B.5.5 Scanning Considerations. An inspection site shall be considered accessible for longitudinal and half skip shear wave inspection if obtaining access to the site:

a. Does not require hot work (welding) or docking of the ship.

b. Limits the removal of wire ways, piping, ducting, lockers, sheet metal work, foundations, etc.

c. Will not cause a major delay to ships schedule.

d. Does not prove hazardous to personnel.

B.6 DISCONTINUITY CHARACTERIZATION.

B.6.1 Characterization. Prior to performing ultrasonic sizing, the discontinuity must be characterized as either planar or volumetric. Thinning, corrosion, or laminations may also be encountered and should be clearly characterized. The following techniques are used for characterization of discontinuities and shall be used on each discontinuity that is evaluated as configuration allows.

B.6.2 Straight Beam Evaluation. When possible, the inspector shall scan the discontinuity with a dual element straight beam transducer. A planar discontinuity may exhibit little or no amplitude while a volumetric discontinuity should be readily detected.

B.6.3 Shear Wave Evaluation. The inspector shall perform shear wave examination of the area of interest, inspecting it from all directions. A planar discontinuity will exhibit a large change in amplitude with changing beam angle. A volumetric discontinuity will exhibit more consistent signal amplitude, regardless of beam angle.

B.6.4 Echo Dynamics. The inspector shall evaluate the general nature and echo dynamic characteristics of the signal as the transducer is moved toward and away from the peaked location. A planar discontinuity will show a smooth echo dynamic response, similar to the response from a side-drilled hole. A volumetric discontinuity will exhibit multiple peaks at several depths along the length of the discontinuity.

B.6.5 Transducer Skew. The transducer shall be skewed from 0 to approximately 30 degrees off normal and the signal shall be monitored to determine whether or not the signal is maintained. A planar discontinuity will result in a rapid drop in signal amplitude. A volumetric discontinuity will result in more consistent signal amplitude, regardless of the orientation of the transducer to the discontinuity.

B.6.6 Orbit the Discontinuity. The transducer shall be orbited around the discontinuity, always oriented toward the center of the discontinuity to peak the signal. The reflected signal shall be monitored as the discontinuity is circled 360 degrees. The amplitude of the signal in the longitudinal and transverse directions (relative to the weld) shall be compared. A planar discontinuity will exhibit a significant difference in signal amplitude between the two major planes of the discontinuity. Volumetric discontinuities will exhibit more consistent signal amplitude.

B.6.7 30-70-70 Creeping Wave Technique. The 30-70-70 creeping wave technique uses a search unit (e.g., WSY 70) that produces a shear wave at a nominal angle of 30 degrees and a mode-converted longitudinal wave at a nominal angle of 70 degrees. The scanning surface and back surface must be reasonably parallel to apply this technique. The 30-70-70 creeping wave technique does not measure the discontinuity depth but provides relative discontinuity height. The 30-70-70 creeping wave technique shall be applied to determine if the discontinuity is ID connected (i.e. observed presence of the CE-2 signal). The discontinuity shall be scanned with the 30-70-70 ID creeping wave technique and interrogated from all directions.

B.7 SIZING DISCONTINUITIES.

B.7.1 Sizing Volumetric Discontinuities/Rapid Drop Method. Volumetric discontinuities shall be sized using the rapid drop method. The recorded depth shall be the minimum and maximum perpendicular distance from the scanning surface. The range of depth is determined by:

a. Maximizing the indication.

b. Moving the search unit toward the discontinuity and recording the depth where the indication begins to drop rapidly toward the baseline.

c. Moving the search unit away from the discontinuity and recording the depth where the indication begins to drop rapidly toward the baseline.

B.7.2 Sizing Planar Discontinuities. Planar discontinuities shall be examined for signals originating from discontinuity tips. Use AATT with shear wave angles of 45, 60, and 70 degrees and the 80-degree HAL technique for sizing planar discontinuities. The half-skip technique shall be used where possible to evaluate all planar discontinuities. Full skip should only be used when the half skip techniques prove inconclusive or when it’s not practical to inspect using the half skip technique (see scanning considerations noted in B.5.5). Planar discontinuities that do not produce tip signals shall be sized by the rapid drop method.

B.7.2.1 Straight Beam Longitudinal Wave Technique. The discontinuity shall be scanned with a dual element straight beam transducer. A dual element transducer may detect tip signals (AATT Technique) for a planar discontinuity. Some discontinuities such as an embedded crack may display both a top and bottom tip simultaneously. The minimum and maximum discontinuity dimensions shall be recorded from these tip signals.

B.7.2.2 Absolute Arrival Time Technique (AATT). Shear wave transducers with refracted angles of 45, 60, and 70 degrees shall be used for the AATT. The direct arrival time from the tip signal is measured. This measurement is the ligament above the discontinuity, or the distance from the discontinuity tip signal to the examination surface. It is necessary to maximize the tip signal for calibration and measurement when using the AATT technique.

B.7.2.3 High-Angle Techniques. The HAL technique and 70-degree shear wave technique shall be used to size discontinuities that are within ½ inch of the inspection surface. The HAL and 70-degree shear technique are absolute arrival time techniques that makes use of high-angle longitudinal waves and shear waves to locate the discontinuity tip. These methods measure the remaining ligament of material above the discontinuity. Tip signals shall be maximized for calibration

and measurement when using the HAL technique. Height determinations made with the HAL and 70-degree shear techniques should always be confirmed using complementary methods.

B.7.3 Evaluation. The characterization and sizing techniques specified herein have limitations and errors may occur that could lead to uncertainty in the accuracy of the discontinuity evaluation. Some discontinuities cannot be accurately sized because of discontinuity or component geometry, and in these cases, the inspector should report that the discontinuity height could not be determined.

B.8 RECORDS.

B.8.1 Reporting Requirements. The following information and suggested format or an equivalent detailed report shall be prepared for each discontinuity. In addition, comments to explain the condition or suspected condition of a given discontinuity should be noted, for example, “thinning/corrosion,” “lamination/inclusion,” or “crack/crack-like”. If conflicting information makes the characterization uncertain, report the condition as “unknown”. Describe in the summary block if the discontinuity appears to be a crack/crack-like discontinuity open to the back surface, an embedded inclusion, base material discontinuity, or a thinning/corrosion condition on the back surface of the wall.

ULTRASONIC CHARACTERIZATION AND SIZING TEST RECORD

1 COMP NO.	2 IDENT/JOINT NO.	3 JOINT CONFIGURATION	4 TWD/FCP/CWP	5 HULL NO.

6 MATERIAL	7 PROCEDURE/REV/CHG	8 FRAME	9 SCAN SURFACE
		_____ ☐ PORT ☐ STBD	☐ ID ☐ OD

INSTRUMENT				14 COUPLANT	15 CALIBRATION STANDARDS			
10 MFG	11 MODEL NO.	12 SER NO.	13 QUAL EXP		#1	#2	#3	#4

CONFIRMATION DETECTION SCAN

16 INDICATION NO.	17 FROM A	18 FROM B	19 LENGTH	DEPTH 20 MIN	DEPTH 21 MAX	22 AMP	23 BEAM DIRECTION	24 SN, ANGLE, SIZE, FREQ	25 LEG
									☐ 1ST (½ SKIP) ☐ 2ND (FULL SKIP)

CHARACTERIZATION SCANS

	TRANSDUCER TYPE	SER NO.	SIZE	FREQ	DATA OBTAINED					
	26 COMPRESSIONAL				27 DEPTH		28 AMPLITUDE			29 ☐ VOLUMETRIC ☐ PLANAR
30	SHEAR				31 AMP F	32 AMP A	33 ED – SM/MP	34 SKEW – RD/CEA	35 ORBIT – SAD/CEA	36 EVALUATION: VOLUMETRIC OR PLANAR
	45 DEGREE									☐ VOLUMETRIC ☐ PLANAR
	60 DEGREE									☐ VOLUMETRIC ☐ PLANAR
	70 DEGREE									☐ VOLUMETRIC ☐ PLANAR
	30/70/70 ID				37 ID CONNECTED:					☐ YES ☐ NO

ED=ECHO DYNAMICS SM=SMOOTH MP=MULTIPLE PEAKS
RD=RAPID DROP CEA=CONSTANT ECHO AMPLITUDE SAD=SIGNIFICANT AMPLITUDE DIFFERENCE

CHARACTERIZATION SUMMARY	38 ☐ VOLUMETRIC		39 ☐ PLANAR	
	☐ THINNING/CORROSION	☐ LAMINATION/INCLUSION	☐ CRACK-LIKE	☐ OTHER

SIZING SCANS

	TRANSDUCER TYPE	SER NO.	SIZE	FREQ	DATA OBTAINED 41 TECHNIQUES	42 TOP	43 BOTTOM	44 HEIGHT
40	COMPRESSIONAL				☐ AATT ☐ RD			
	45 DEGREE				☐ AATT ☐ RD			
	60 DEGREE				☐ AATT ☐ RD			
	70 DEGREE				☐ AATT ☐ RD			
	HAL				☐ AATT ☐ RD			
	OTHER							
	OTHER							

45 REMARKS/NOTES/SKETCHES

SUMMARY

46 COMPONENT THICKNESS	47 LENGTH OR AREA REQUESTED	48 LENGTH OR AREA INSPECTED	49 ID CONNECTED	50 HEIGHT	REMAINING LIGAMENT 51 TO TOP OR OD	52 TO BOTTOM OR ID
			☐ YES ☐ NO			

	PRINT NAME	SIGNATURE	LEVEL	54 CODE	55 BADGE NO.	56 DATE
53 INSPECTOR						
57 UTCS TEST EXAMINER REVIEWER	PRINT NAME	SIGNATURE	LEVEL	58 CODE	59 BADGE NO.	60 DATE

Enter the information specified below in the corresponding blocks on the test record.
NOTE: Numerical entries to be entered in decimal form, to the nearest 0.001 inch.

BLOCK	ENTRY
1	Enter the component number (i.e. flask no., URO MRC site etc.).
2	Enter the identification or joint number.
3	Enter the joint configuration.
4	Enter the technical work document, (i.e., TWD, FCP, CWP).
5	Enter the Hull Number.
6	Enter the material type (e.g., HY 80, HSS, etc.).
7	Enter the procedure identification number, revision and change number.
8	Enter the frame number; check either port or starboard for the side of the ship.
9	Scan surface (check applicable block, inside diameter or outside diameter).
10	Enter the instrument manufacturer.
11	Enter the instrument model number.
12	Enter the instrument serial number.
13	Enter the instrument qualification expiration date.
14	Enter the type of couplant used.
15	Enter the serial numbers of calibration standards used (blocks 1 through 4 provided).
16	Enter the indication number from the original inspection report.
17	Enter the distance from “A” or other specified location.
18	Enter the distance from “B” or other specified location.
19	Enter the length of the indication.
20	Enter the minimum depth.
21	Enter the maximum depth.
22	Enter the amplitude of indication in percentage of screen height.
23	Enter the beam direction.
24	Enter the serial number, beam angle, size, and frequency.
25	Enter the leg of the sound beam the defect was located.
26	Enter the serial number, size, frequency of longitudinal transducer.
27	Enter the depth measured to indication if detected, or N/A.
28	Enter the amplitude of the indication if detected with longitudinal transducer, or N/A (% DAC or db’s over DAC).
29	Check a block to indicate the longitudinal scan characterization as volumetric or planar.
30	Enter the serial number, size, frequency of shear transducers.
31	Enter the amplitude from the forward beam direction (% DAC or db’s over DAC).
32	Enter the amplitude from the aft beam direction (% DAC or db’s over DAC).
33	Enter the echo dynamics (ED) results (SM for smooth, MP for multiple peaks).
34	Enter the skew results (RD for rapid drop, CEA for constant echo amplitude).
35	Enter the Orbit results (SAD for significant amplitude difference, CEA for constant echo amplitude).
36	Check a block to indicate the shear characterizations as volumetric or planar.
37	Check a block to indicate the 30-70-70 (WSY 70) evaluation as yes/no for whether it is ID connected.
38	Check the appropriate blocks if volumetric reflector for the characterization summary.
39	Check the appropriate blocks if planar reflector for the characterization summary.
40	Enter the serial number, size, frequency of sizing transducers.
41	Enter if AATT or rapid drop (RD) techniques used for data collected.
42	Enter the top depth measured.
43	Enter the bottom depth measured.
44	Enter the height (through wall dimension).
45	Enter remarks, notes and sketches (sign, badge, & date entries).
46	Enter the actual wall thickness of the part.
47	Enter the length or area requested.
48	Enter the length or area inspected.
49	Check a block to indicate whether it is ID connected.
50	Enter the height (through wall dimension).
51	Enter the remaining ligament to the Top or OD surface.
52	Enter the remaining ligament to the Bottom or ID surface.
53	Enter the Inspector’s name, print and sign; enter certification level.
54	Enter the Inspector’s code or Dept.
55	Enter Inspector badge or ID number
56	Enter the Inspection date.
57	Enter the Independent UTCS Test Examiner’s name, print and sign; enter certification level.
58	Enter the Independent UTCS Test Examiner’s code or Dept.
59	Enter Independent UTCS Test Examiner’s badge or ID number
60	Enter the Independent UTCS Test Examiner’s review date.

Ref: NAVSEAINST 4160.3 NAVSEA S0005-AA-GYD-030/TMMP

NAVSEA/SPAWAR TECHNICAL MANUAL DEFICIENCY/EVALUATION REPORT (TMDER)

INSTRUCTIONS: Continue on 8 ½" x 11" on page if additional space is needed.
1. Use this report to indicate deficiencies, problems and recommendations relating to publications.
2. For **CLASSIFIED** TMDERs see OPNAVINST 5510H for mailing requirements.
3. For TMDERs that affect more than one publication, submit a separate TMDER for each.
4. Submit TMDERs at web site https://nsdsa.nmci.navy.mil or mail to: **COMMANDER, CODE 310 TMDERs, NAVSURFWARCENDIV NSDSA, 4363 MISSILE WAY BLDG 1389, PORT HUENEME CA 93043-4307**

1. PUBLICATION NUMBER	2. VOL/PART	3. REV/DATE OR CHG/DATE	4. SYSTEM/EQUIPMENT ID

5. TITLE OF PUBLICATION	6. REPORT CONTROL NUMBER (6 digit UIC-YY-any four: xxxxxx-10-xxxx)

7. RECOMMEND CHANGES TO PUBLICATION

7a. Page #	7b. Para #	7c. RECOMMENDED CHANGES AND REASONS

8. ORIGINATOR'S NAME AND WORK CENTER	9. DATE	10. ORIGINATOR'S E-MAIL ADDRESS	11. TMMA of Manual (NSDSA will complete)

12. SHIP OR ACTIVITY Name and Address (Include UIC/CAGE/HULL)	13. Phone Numbers:
	Commercial (___) ___-_____ DSN ___-_____ FAX (___) ___-_____

FOLD HERE AND TAPE SECURELY
PLEASE DO NOT STAPLE

INCLUDE COMPLETE ADDRESS

USE
PROPER
POSTAGE

FOR OFFICIAL USE ONLY

COMMANDER
CODE 310 TMDERs
NAVSURFWARCENDIV NSDSA
4363 MISSILE WAY BLDG 1389
PORT HUENEME CA 93043-4307

FOLD HERE AND TAPE SECURELY
PLEASE DO NOT STAPLE