AWARD/CONTRACT

1. THIS CONTRACT IS A RATED ORDER UNDER DPAS (15 CFR 700) | RATING | PAGE OF PAGES 1 110

2. CONTRACT (Proc. Inst. Ident.) NO.
EP-W-14-022

3. EFFECTIVE DATE
10/14/2014

4. REQUISITION/PURCHASE REQUEST/PROJECT NO.
PR-OSWER-14-00415

5. ISSUED BY CODE SRRPOD

SRRPOD
US Environmental Protection Agency
William Jefferson Clinton Building
1200 Pennsylvania Avenue, N. W.
Mail Code: 3803R
Washington DC 20460

6. ADMINISTERED BY (If other than Item 5) CODE

7. NAME AND ADDRESS OF CONTRACTOR (No., street, county, State and ZIP Code)

TECHLAW, INC.
Attn: JUDY MANLEY
14500 AVION PKY STE 300
(b)(4)
CHANTILLY VA 201511108

8. DELIVERY
☐ FOB ORIGIN ☒ OTHER (See below)

9. DISCOUNT FOR PROMPT PAYMENT

10. SUBMIT INVOICES (4 copies unless otherwise specified) TO THE ADDRESS SHOWN IN | ITEM

CODE 116211863 FACILITY CODE

11. SHIP TO/MARK FOR CODE

12. PAYMENT WILL BE MADE BY CODE RTP

RTP Finance Center
US Environmental Protection Agency
RTP-Finance Center
Mail Drop D143-02
109 TW Alexander Drive
Durham NC 27711

13. AUTHORITY FOR USING OTHER THAN FULL AND OPEN COMPETITION
10 U.S.C. 2304 (c) ( ) 41 U.S.C. 253 (c) ( )

14. ACCOUNTING AND APPROPRIATION DATA
See Schedule

15A. ITEM NO.	15B. SUPPLIES/SERVICES	15C. QUANTITY	15D. UNIT	15E. UNIT PRICE	15F. AMOUNT
	Continued				

15G. TOTAL AMOUNT OF CONTRACT ▶ $9,973,032.77

16. TABLE OF CONTENTS

(X)	SEC	DESCRIPTION	PAGE(S)	(X)	SEC	DESCRIPTION	PAGE(S)
		PART I - THE SCHEDULE				PART II - CONTRACT CLAUSES	
X	A	SOLICITATION/CONTRACT FORM	1-2	X	I	CONTRACT CLAUSES	45-49
X	B	SUPPLIES OR SERVICES AND PRICES/COSTS	8-12			PART III - LIST OF DOCUMENTS, EXHIBITS AND OTHER ATTACH.	
X	C	DESCRIPTION/SPECS./WORK STATEMENT	13-14	X	J	LIST OF ATTACHMENTS	50
X	D	PACKAGING AND MARKING	15			PART IV - REPRESENTATIONS AND INSTRUCTIONS	
X	E	INSPECTION AND ACCEPTANCE	16-17		K	REPRESENTATIONS, CERTIFICATIONS AND OTHER STATEMENTS OF OFFERORS	
X	F	DELIVERIES OR PERFORMANCE	18-20				
X	G	CONTRACT ADMINISTRATION DATA	21-26		L	INSTRS., CONDS., AND NOTICES TO OFFERORS	
X	H	SPECIAL CONTRACT REQUIREMENTS	27-44		M	EVALUATION FACTORS FOR AWARD	

CONTRACTING OFFICER WILL COMPLETE ITEM 17 (SEALED-BID OR NEGOTIATED PROCUREMENT) OR 18 (SEALED-BID PROCUREMENT) AS APPLICABLE

17. CONTRACTOR'S NEGOTIATED AGREEMENT (Contractor is required to sign this document and return 1 copies to issuing office.) Contractor agrees to furnish and deliver all items or perform all the services set forth or otherwise identified above and on any continuation sheets for the consideration stated herein. The rights and obligations of the parties to this contract shall be subject to and governed by the following documents: (a) this award/contract, (b) the solicitation, if any, and (c) such provisions, representations, certifications, and specifications, as are attached or incorporated by reference herein. (Attachments are listed herein.)

18. SEALED-BID AWARD (Contractor is not required to sign this document.) Your bid on Solicitation Number SOLICITATION-00022 including the additions or changes made by you which additions or changes are set forth in full above, is hereby accepted as to the items listed above and on any continuation sheets. This award consummates the contract which consists of the following documents: (a) the Government's solicitation and your bid, and (b) this award/contract. No further contractual document is necessary. (Block 18 should be checked only when awarding a sealed bid contract.)

19A. NAME AND TITLE OF SIGNER (Type or print)
Patricia P. Deroche President

20A. NAME OF CONTRACTING OFFICER
Elizabeth Fuller

19B. NAME OF CONTRACTOR
BY (Signature of person authorized to sign)

19C. DATE SIGNED
9/29/14

20B. UNITED STATES OF AMERICA
BY (Signature of Contracting Officer)

20C. DATE SIGNED

AUTHORIZED FOR LOCAL REPRODUCTION
Previous edition is NOT USABLE

STANDARD FORM 26 (REV. 5-2012)
Prescribed by GSA - FAR (48 CFR) 53.214(a)

NAME OF OFFEROR OR CONTRACTOR

TECHLAW, INC.

ITEM NO (A)	SUPPLIES/SERVICES (B)	QUANTITY (C)	UNIT (D)	UNIT PRICE (E)	AMOUNT (F)
	DUNS Number: 116211863 Environmental Services Assistance Team (ESAT) Region 2 Max Expire Date: 10/13/2021 Accounting Info: 14-T-72BS-303DD2-2505-HQCOLA00-1472BS5051-001 BFY: 14 Fund: T Budget Org: 72BS Program (PRC): 303DD2 Budget (BOC): 2505 Job #: HQCOLA00 DCN - Line ID: 1472BS5051-001 FOB: Destination Period of Performance: 10/14/2014 to 10/13/2017				
0001	Contract Base Period (3 years) Obligated Amount: $150,000.00				4,072,668.33
0002	Contract Option Period 1 (2 years) (Option Line Item) Minimum Guarantee: $0.00				2,888,072.22
0003	Contract Award Term 1 (2 years) (Option Line Item) Minimum Guarantee: $0.00 The obligated amount of award: $150,000.00. The total for this award is shown in box 15G.				3,012,292.22

TABLE OF CONTENTS

PART I - THE SCHEDULE 8
SECTION B – Supplies or Services and Prices/Costs 8
B.1 Description of Contract (CO Added) 8
B.2 Fixed Rates For Services—Indefinite Delivery/Indefinite Quantity Contract (EPAAR 1552.216-73) (Apr 1984) Tailored 8
B.3 Contractor Employees Under Multiple Labor Categories (CO Added) 9
B.4 Minimum and Maximum Amounts (EPA-B-16-101) 9
B.5 Limitation of Government's Obligation (EPA-B-32-103) Tailored 9
B.6 Materials (CO Added) 11
B.7 Waiver of Withholding (CO Added) 11
B.8 Task Order Ordering Procedures (CO Added) 11
SECTION C – Description/Specifications/Statement of Work 13
C.1 Performance Work Statement (EPA-C-10-101) 13
C.2 Notice Regarding Prohibited Contractor Activities On EPA Contracts (EPA-H-07-103) 13
C.3 Additional Contractor Requirements (CO Added) 14
SECTION D – Packaging and Marking 15
[There are no clauses in this section.] 15
SECTION E – Inspection and Acceptance 16
E.1 Contract Clauses Incorporated by Reference 16
Inspection of Services—Fixed-Price (FAR 52.246-4) (Aug 1996) 16
Inspection of Services—Time-and-Material or Labor Hour (FAR 52.246-6) (May 2001) 16
E.2 Higher-Level Contract Quality Requirement (Government Specification) (FAR 52.246-11) (Feb 1999) 16
SECTION F – Deliveries or Performance 18
F.1 Contract Clauses Incorporated by Reference 18
Stop-Work Order (FAR 52.242-15) (Aug 1989) 18
Working Files (EPAAR 1552.211-75) (Apr 1984) 18
Management Consulting Services (EPAAR 1552.211-78) (Apr 1985) 18
F.2 Period of Performance (EPA-F-12-101) 18
F.3 Reports of Work (EPAAR 1552.211-70) (Oct 2000) 18
F.4 Monthly Progress Report (EPAAR 1552.211-72) (Jun 1996) Deviation Tailored 18
SECTION G – Contract Administration Data 21
G.1 Contract Clauses Incorporated by Reference 21
Government Property (EPAAR 1552.245-70) (Sep 2009) 21
G.2 Submission Of Invoices (EPAAR 1552.232-70) (Oct 1997) Alternate I (Jun 1996) Deviation Tailored.. 21
G.3 Key Personnel (EPAAR 1552.237-72) (Apr 1984) Deviation 22
G.4 Indirect Costs (EPAAR 1552.242-70) (Apr 1984) Deviation 23
G.5 Government-Furnished Data (EPAAR 1552.245-71) (Sept 2009) 24
G.6 Contract Administration Representatives (EPA-G-42-101) 24
G.7 Authorized Representative of the Contract-Level COR (EPA-G-42-102) Tailored 25
G.8 Designation of Property Administrator (EPA-G-45-101) 25
G.9 Identification of Subcontractors (CO Added) 26
SECTION H – Special Contract Requirements 27

H.1 Contract Clauses Incorporated by Reference 27
Display of EPA Office of Inspector General Hotline Poster (EPAAR 1552.203-71) (Aug 2000) . 27
Printing (EPAAR 1552.208-70) (Sep 2012) 27
Organizational Conflicts of Interest (EPAAR 1552.209-71) (May 1994) Alternate I (May 1994) 27
Notification of Conflicts of Interest Regarding Personnel (EPAAR 1552.209-73) (May 1994) 27
Compliance with EPA Policies for Information Resources Management (EPAAR 1552.211-79) (Jan 2012) 27
Care of Laboratory Animals (EPAAR 1552.223-72) (Oct 2000) 27
Project Employee Confidentiality Agreement (EPAAR 1552.227-76) (May 1994) 27
Payments—Fixed-Rate Services Contract (EPAAR 1552.232-73) (Oct 2000) 27
Screening Business Information for Claims of Confidentiality (EPAAR 1552.235-70) (Apr 1984)….. 27
Treatment of Confidential Business Information (EPAAR 1552.235-71) (Apr 1984) 27
Access to Federal Insecticide, Fungicide, and Rodenticide Act Confidential Business Information (EPAAR 1552.235-73) (Apr 1996) 27
Access to Toxic Substances Control Act Confidential Business Information (EPAAR 1552.235-75) (Apr 1996) 27
Treatment of Confidential Business Information (TSCA) (EPAAR 1552.235-76) (Apr 1996) 27
Data Security for Federal Insecticide, Fungicide and Rodenticide Act Confidential Business Information (EPAAR 1552.235-77) (Dec 1997) 27
Data Security for Toxic Substances Control Act Confidential Business Information (EPAAR 1552.235-78) (Dec 1997) 27
Release of Contractor Confidential Business Information (EPAAR 1552.235-79) (Apr 1996) 27
Access to Confidential Business Information (EPAAR 1552.235-80) (Oct 2000) 27
Paperwork Reduction Act (EPAAR 1552.237-75) (Apr 1984) 27
Government-Contractor Relations (EPAAR 1552.237-76) (Jun 1999) 27
Fill in (e)(1): 5 days / Fill in (e)(2): 5 days 27
Acquisition of Energy Star Compliant Microcomputers, Including Personal Computers, Monitors, and Printers (EPAAR 1552.239-103) (Apr 1996) 27
H.2 Limitation of Future Contracting (ESAT) (EPAAR 1552.209-74) (Apr 2004) Alternate III (Apr 2004) Deviation 27
H.3 Award Term Incentive (EPAAR 1552.216-77) (Feb 2008) 29
H.4 Award Term Incentive Plan (EPAAR 1552.216-78) (Feb 2008) Alternate I (Feb 2008) Tailored... 30
H.5 Award Term Availability of Funds (EPAAR 1552.216-79) (Feb 2008) 31
H.6 Option to Extend the EFFECTIVE PERIOD of the Contract—Indefinite Delivery/Indefinite Quantity Contract (EPAAR 1552.217-76) (Apr 1984) Tailored 32
H.7 Small Disadvantaged Business Targets (EPAAR 1552.219-73) (Oct 2000) 32
H.8 Technical Direction (EPAAR 1552.237-71) (Aug 2009) Tailored 33
H.9 Retention and Availability of Contractor Files (EPA-H-04-101) Tailored 34
H.10 Electronic Signatures (EPA-H-04-102) 35
H.11 Identification of On-Site Contractor Employees (EPA-H-07-102) 35
H.12 Contractor Disclosure Requirements for Conflict of Interest (EPA-H-09-101) 36
H.13 Task Order Conflict of Interest Certification (EPA-H-09-106) Tailored 36
H.14 Unpaid Federal Tax Liability & Felony Criminal Violation Certification (EPA-H-09-107) (Apr 2012) 37

H.15 Regional Crossover (EPA-H-09-108) Tailored 37
H.16 Government Rights Under CERCLA (EPA-H-11-103) 38
H.17 Confidentiality of Information (EPA-H-27-102)....38
H.18 Application of Rights in Data—Special Works Clause (EPA-H-27-103)....38
H.19 Approval of Contractor Travel (EPA-H-31-104) Tailored....39
H.20 Approval of Training (EPA-H-31-105) Tailored....40
H.21 Annual Allocation of Non-Site-Specific Costs (EPA-H-42-101)....40
H.22 Motor Vehicle Usage (ESAT) (CO Added)....41
H.23 Clauses Not Applicable to Time-and-Materials Type Task Orders (CO Added)....42
H.24 Clauses Not Applicable to Firm-Fixed-Price Task Orders (CO Added) 42
H.25 Environmentally Preferable Practices (EPA-H-23-101)....42
H.26 Utilization of FedConnect for Contract Administration (EPA-H-42-102) (Feb 2014) 43
H.27 Temporary Closure of Epa Facilities (EPA-H-42-103) Tailored 43
PART II - CONTRACT CLAUSES 45
SECTION I – Contract Clauses 45
I.1 Contract Clauses Incorporated by Reference....45
Definitions (FAR 52.202-1) (Nov 2013)....45
Gratuities (FAR 52.203-3) (Apr 1984)....45
Covenant Against Contingent Fees (FAR 52.203-5) (Apr 1984) 45
Restrictions on Subcontractor Sales to the Government (FAR 52.203-6) (Sep 2006)....45
Anti-Kickback Procedures (FAR 52.203-7) (Oct 2010) 45
Cancellation, Rescission, and Recovery of Funds for Illegal or Improper Activity (FAR 52.203-8) (Jan 1997)....45
Price or Fee Adjustment for Illegal or Improper Activity (FAR 52.203-10) (Jan 1997) 45
Limitation on Payments to Influence Certain Federal Transactions (FAR 52.203-12) (Oct 2010)45
Contractor Code of Business Ethics and Conduct (FAR 52.203-13) (Apr 2010)....45
Display of Hotline Poster(s) (FAR 52.203-14) (Dec 2007) 45
Fill in: See EPAAR 1552.203-71....45
Contractor Employee Whistleblower Rights and Requirement to Inform Employees of Whistleblower Rights (FAR 52.203-17) (Sept 2013)....45
Printed or copied Double-Sided on Postconsumer Fiber Content Paper (FAR 52.204-4) (May 2011)….....45
Personal Identity Verification of Contractor Personnel (FAR 52.204-9) (Jan 2011) 45
Reporting Executive Compensation and First-Tier Subcontract Awards (FAR 52.204-10) (Jul 2013)….....45
System for Award Management Maintenance (52.204-13) (Jul 2013)……...45
Service Contract Reporting Requirements for Indefinite-Delievery Contracts (FAR 52.204-15) (Jan 2014) 45
Protecting the Government's Interest When Subcontracting with Contractors Debarred, Suspended, or Proposed for Debarment (FAR 52.209-6) (Aug 2013)....45
Updates of Publicly Available Information Regarding Responsibility Matters (FAR 52.209-9) (Jul 2013)….....45
Market Research (FAR 52.210-1) (Apr 2011) 45
Audit and Records – Negotiation (FAR 52.215-2) (Oct 2010)....45
Order of Precedence – Uniform Contract Format (FAR 52.215-8) (Oct 1997)....45
Allowable Cost and Payment (FAR 52.216-7) (Jun 2013) 45

Fill in (a)(3): 30th day.....45
Option to Extend Services (FAR 52.217-8) (Nov 1999).....45
Fill in: 30 days. 45
Notice of Price Evaluation Preference for HUBZone Small Business Concerns (FAR 52.219-4) (Jan 2011).....45
Utilization of Small Business Concerns (FAR 52.219-8) (Jul 2013).....46
Small Business Subcontracting Plan (FAR 52.219-9) (Jul 2013) Alternate II (Oct 2001).....46
Liquidated Damages – Subcontracting Plan (FAR 52.219-16) (Jan 1999).....46
Small Disadvantaged Business Participation Program– Disadvantaged Status and Reporting (FAR 52.219-25) (Jul 2013).....46
Post-Award Small Business Program Rerepresentation (FAR 52.219-28) (Jul 2013) 46
Convict Labor (FAR 52.222-3) (Jun 2003).....46
Prohibition of Segregated Facilities (FAR 52.222-21) (Feb 1999).....46
Equal Opportunity (FAR 52.222-26) (Mar 2007) 46
Equal Opportunity for Special Disabled Veterans, Veterans of the Vietnam Era, and Other Eligible Veterans (FAR 52.222-35) (Sep 2010) 46
Affirmative Action for Workers with Disabilities (FAR 52.222-36) (Oct 2010) 46
Employment Reports on Special Disabled Veterans, Veterans of the Vietnam Era, and Other Eligible Veterans (FAR 52.222-37) (Sep 2010) 46
Notification of Employee Rights Under the National Labor Relations Act (FAR 52.222-40) (Dec 2010)….. 46
Combatting Trafficking in Persons (FAR 52.222-50) (Feb 2009).....46
Employment Eligibility Verification (FAR 52.222-54) (Aug 2013) 46
Drug-Free Workplace (FAR 52.223-6) (May 2001) 46
Afirmative Procurement of Biobased Products Under Service and Construction Contracts (FAR 52.223-2)(Sept 2013) 46
Contractor Policy to Ban Text Messaging While Driving (FAR 52.223-18) (Aug 2011).....46
Restrictions on Certain Foreign Purchases (FAR 52.225-13) (Jun 2008).....46
Authorization and Consent (FAR 52.227-1) (Dec 2007) 46
Notice and Assistance Regarding Patent and Copyright Infringement (FAR 52.227-2) (Dec 2007).....46
Rights in Data—General (FAR 52.227-14) (Dec 2007) 46
Additional Data Requirements (FAR 52.227-16) (Jun 1987) 46
Rights in Data—Special Works (FAR 52.227-17) (Dec 2007).....46
Cost Accounting Standards (FAR 52.230-2) (May 2012) 46
Disclosure and Consistency of Cost Accounting Practices (FAR 52.230-3) (May 2012).....46
Administration of Cost Accounting Standards (FAR 52.230-6) (Jun 2010).....46
Payments (FAR 52.232-1) (Apr 1984).....46
Payments Under Time-and-Materials and Labor-Hour Contracts (FAR 52.232-7) (Aug 2012)....46
Discounts for Prompt Payment (FAR 52.232-8) (Feb 2002) 46
Extras (FAR 52.232-11) (Apr 1984) 46
Interest (FAR 52.232-17) (Oct 2010).....46
Assignment of Claims (FAR 52.232-23) (Jan 1986) 46
Prompt Payment (FAR 52.232-25) (Jul 2013) 46
Payment by Electronic Funds Transfer –System for Award Management (FAR 52.232-33) (Jul 2013)….. 46

Multiple Payment Arrangements (FAR 52.232-37) (May 1999) 47
Unenforceablility of Unauthorized Obligations (FAR 52.232-39) (Jun 2013) 47
Disputes (FAR 52.233-1) (Jul 2002) Alternate I (Dec 1991) 47
Protest After Award (FAR 52.233-3) (Aug 1996) Alternate I (Jun 1985) 47
Applicable Law for Breach of Contract Claim (FAR 52.233-4) (Oct 2004) 47
Protection of Government Buildings, Equipment, and Vegetation (FAR 52.237-2) (Apr 1984) ...47
Continuity of Services (FAR 52.237-3) (Jan 1991) 47
Penalties for Unallowable Costs (FAR 52.242-3) (May 2001) 47
Certification of Final Indirect Costs (FAR 52.242-4) (Jan 1997) 47
Bankruptcy (FAR 52.242-13) (Jul 1995) 47
Changes—Fixed-Price (FAR 52.243-1) (Aug 1987) Alternate I (Apr 1984) 47
Changes—Time-And-Materials or Labor-Hours (FAR 52.243-3) (Sep 2000) 47
Subcontracts (FAR 52.244-2) (Oct 2010) 47
Fill in (d): None / Fill in (j): See G.9 Identification of Subcontractors 47
Subcontracts for Commercial Items (FAR 52.244-6) (Dec 2013) 47
Government Property (FAR 52.245-1) (Apr 2012) 47
Use and Charges (FAR 52.245-9) (Apr 2012) 47
Limitation of Liability–Services (FAR 52.246-25) (Feb 1997) 47
Value Engineering (FAR 52.248-1) (Oct 2010) 47
Termination for Convenience of the Government (Services) (Short Form) (FAR 52.249-4) (Apr 1984)….. 47
Termination (Cost-Reimbursement) (FAR 52.249-6) (May 2004) Alternate IV (May 2004) 47
Default (Fixed-Price Supply and Service) (FAR 52.249-8) (Apr 1984) 47
Excusable Delays (FAR 52.249-14) (Apr 1984) 47
Computer Generated Forms (FAR 52.253-1) (Jan 1991) 47
I.2 Indefinite Quantity (FAR 52.216-22) (Oct 1995) 47
I.3 Ordering (FAR 52.216-18) (Oct 1995) 48
I.4 Order Limitations (FAR 52.216-19) (Oct 1995) 48
I.5 Ordering—By Designated Ordering Officers (EPAAR 1552.216-72) (Apr 1984) Alternate I (Apr 1984) Deviation 48
I.6 Clauses Incorporated by Reference (FAR 52.252-2) (Feb 1998) 49
I.7 Authorized Deviations in Clauses (FAR 52.252-6) (Apr 1984) 49
PART III – LIST OF DOCUMENTS, EXHIBITS, AND OTHER ATTACHMENTS 50
SECTION J – List of Attachments 50
J.1 List of Contract Attachments (CO added) 50
J.2 Contract Attachments Incorporated by Reference (CO Added) 50

PART I – THE SCHEDULE

SECTION B – SUPPLIES OR SERVICES AND PRICES/COSTS

B.1 DESCRIPTION OF CONTRACT (CO ADDED)

(a) This is a U.S. Environmental Protection Agency (EPA) contract to obtain contractor services to support the Environmental Services Assistance Team (ESAT) in EPA Region 2. The purpose of this contract is for the contractor to provide technical, analytical and quality assurance (QA) support, primarily to the EPA Superfund Program, other EPA programs, Federal and state agencies, and tribal organizations to facilitate identification, assessment, regulation, and remediation of environmental hazards which may pose a threat to human health or the environment.

(b) This is a single award indefinite-delivery indefinite-quantity (IDIQ) contract with fixed labor rates for services. Work to be performed under this contract will be ordered through task orders placed pursuant to the ordering procedures described below. All task orders placed under this contract will be within the scope of the contract Performance Work Statement (PWS) (see Attachment 1).

B.2 FIXED RATES FOR SERVICES—INDEFINITE DELIVERY/INDEFINITE QUANTITY CONTRACT (EPAAR 1552.216-73) (APR 1984) TAILORED

The following fixed rates shall apply for payment purposes for the duration of the contact:

LABOR CATEGORIES	LABOR RATES						
	Base Period			Option Period 1		Award Term 1	
	Year 1	Year 2	Year 3	Year 4	Year 5	Year 6	Year 7
Key Personnel	(b)(4)						
Expert Consultant							
Senior Consultant							
Consultant							
Associate							
Technician							

Descriptions of labor categories including minimum qualifications (e.g. education, experience) can be found in Attachment 6 – Labor Category Descriptions.

The rate, or rates, set forth above cover all expenses, including report preparation, salaries, overhead, general and administrative expenses, and profit.

The Contractor shall voucher for only the time of the personnel whose services are applied directly to the work called for in individual task orders and accepted by the EPA COR. The Government shall pay the Contractor for the life of a task order at rates in effect when the task order was issued, even if performance under the task order crosses into another period. The

Contractor shall maintain time and labor distribution records for all employees who work under the contract. These records must document time worked and work performed by each individual on all task orders.

B.3 CONTRACTOR EMPLOYEES UNDER MULTIPLE LABOR CATEGORIES (CO ADDED)

(a) When a Contractor employee's normally assigned category of labor is higher than the function he/she is performing during any period of work, the rate charged for that employee shall be based on the function that the employee is performing (e.g., Senior Scientist who is performing the duties of a Junior Technician shall be charged at the loaded fixed labor rate for a Junior Technician during the period of time he/she is performing these duties).

(b) When a Contractor employee's normally assigned category of labor is at a rate lower than the function he/she is performing during any period of work at a specific site, the rate charged for that employee shall be based on the actual rate paid to that employee and based on whether the employee meets the qualifications of the higher labor category (e.g., Junior Technician performing the duties of a Senior Scientist shall be charged at the fixed labor rate for a Senior Scientist only if the employee is paid by the contractor at the rate of a Senior Scientist and the employee meets the qualifications of a Senior Scientist). If the employee is not paid at the higher rate or does not meet the qualifications of the higher category, the contractor shall only bill at the rate of the employee's normally assigned category of labor.

B.4 MINIMUM AND MAXIMUM AMOUNTS (EPA-B-16-101)

During the Base Period specified in the "Ordering" clause, the Government shall place orders totaling a minimum of $150,000.00. The amount of all orders shall not exceed TBD at time of award.

Item #	Period of Performance	Minimum Guarantee	Contract Ceiling
0001	Contract Base Period PoP – 36 months/3 years	$150,000.00	$ 4,072,668.33
0002	Contract Option Period 1 PoP – 24 months/2 years	$0.00	$ 2,888,072.22
0003	Contract Award Term 1 PoP – 24 months/2 years	$0.00	$ 3,012,292.22
	Total	$150,000.00	$ 9,973,032.77

B.5 LIMITATION OF GOVERNMENT'S OBLIGATION (EPA-B-32-103) TAILORED

(a) Regardless of the type of task order issued, the individual task order may be incrementally funded. Incremental funding will be added to task orders via modification. Funding obligations and deobligations may be performed unilaterally by the Contracting Officer. The Contracting Officer will perform unilateral deobligation modifications only after making the determination that funds are available to be deobligated.

(b) The Government will not place task orders under this contract with a cumulative ceiling

amount greater than the maximum value contained in the contract Schedule. The Contractor agrees to use its best efforts to perform the work specified in the contract, and ordered through task orders under this contract, within the estimated maximum value.

(c) The parties estimate that performance of each task order will not cost the Government more than the ceiling amount specified in each task order. Each task order will specify the funded amount available for payment by the Government. The parties contemplate that the Government will obligate additional funds incrementally to each task order up to the task order ceiling. The Contractor agrees to perform work on each task order up to the point at which the total amount paid and payable by the Government under the task order does not exceed the total amount actually funded by the Government to the task order.

(d) The Contractor shall notify the Contracting Officer in writing whenever it has reason to believe that the costs it expects to incur under each task order in the next 45 days, when added to all costs previously incurred, will exceed 85 percent of the total amount funded to the task order by the Government. The notice shall state the estimated amount of additional funds required to continue performance for the period specified in the task order.

(e) Sixty days before the end of the period specified in each task order, the Contractor shall notify the Contracting Officer in writing of the estimated amount of additional funds, if any, required to continue timely performance under the task order or for any further period specified in the task order or otherwise agreed upon, and when the funds will be required.

(f) Except as required by other provisions of this contract, specifically citing and stated to be an exception to this clause—

(1) The Government is not obligated to reimburse the Contractor for costs incurred in excess of the total funded amount to each task order; and

(2) The Contractor is not obligated to continue performance under any task order (including actions under the Termination clause of this contract) or otherwise incur costs in excess of the then funded amount of the task order.

(g) No notice, communication, or representation in any form from any person other than the Contracting Officer shall affect the amount funded to each task order. In the absence of the specified notice, the Government is not obligated to reimburse the Contractor for any costs in excess of the total amount funded to each task order, whether incurred during the course of the contract or as a result of termination.

(h) When and to the extent that the amount funded to each task order is increased, any costs the Contractor incurs before the increase that are in excess of the amount previously funded by the Government shall be allowable to the same extent as if incurred afterward, unless the Contracting Officer issues a termination or other notice and directs that the increase is solely to cover termination or other specified expenses.

(i) Change orders shall not be considered an authorization to exceed the funded amount of the task order, unless they contain a statement increasing the funded amount.

(j) Nothing in this clause shall affect the right of the Government to terminate this contract. If this contract is terminated, the Government and the Contractor shall negotiate an equitable distribution of all property produced or purchased under the contract, based upon the share of costs incurred by each.

B.6 MATERIALS (CO ADDED)

(a) For the purposes of this contract, *Materials*, as defined in FAR 52.232-7, Payments Under Time-and-Materials and Labor Hour Contracts, means:
(1) Direct materials, including supplies transferred between divisions, subsidiaries, or affiliates of the Contractor under a common control;
(2) Subcontracts for supplies and incidental services for which there is not a labor category specified in the contract;
(3) Other direct costs (e.g., incidental services for which there is not a labor category specified in the contract, travel, computer usage charges, etc.); and
(4) Applicable indirect costs.

(b) There is no contract-level ceiling on costs for materials under this contract; rather, the costs for materials will be managed on a task order basis. When the Government instructs the Contractor to prepare a proposal for a new task order, the Contractor shall provide an estimate for materials in its task order proposal. Once a task order proposal has been accepted by the Government, the Contractor shall not exceed the total dollar amount of its proposed estimate for materials by more than 10% without prior written approval from the Contracting Officer.

(c) The Contractor shall incur costs for materials in accordance with FAR Subpart 31.2, Contracts with Commercial Organizations, and its own internal cost-accounting principles.

(d) The Government will reimburse the Contractor for its approved costs for materials in accordance with FAR 52.232-7, Payments under Time-and-Materials and Labor Hour Contracts, and EPAAR 1552.232-73, Payments—Fixed Rate Services Contract.

B.7 WAIVER OF WITHHOLDING (CO ADDED)

This contract does not require the Contracting Officer to withhold 5 percent of the amounts due under paragraph (a) of EPAAR 1552.232-73, Payments—Fixed Rate Services Contract.

B.8 TASK ORDER ORDERING PROCEDURES (CO ADDED)

(a) The Contracting Officer (CO) will follow the procedures of FAR 16.505 in conjunction with the procedures in this section when placing task orders under this contract.

(b) The CO will initiate a new task order by submitting a request for a task order proposal and cost estimate from the Contractor. The request will include: the task order statement of work (SOW), attachments or supplemental information (if any), task order terms and conditions (if any), submission instructions, and the due date for the task order proposal. Requesting a task order proposal does not commit the Government to awarding a task order.

(c) The Contractor shall submit a task order proposal and cost estimate in accordance with the submission instructions. When responding to a task order initiation, the contractor shall submit a Conflict of Interest (COI) certification in accordance with the Section H clause, Task Order COI Certification. The Government will evaluate the task order proposal and cost estimate received. The Government may request revisions to the task order proposal if deemed necessary. Once the Government has accepted the task order proposal and cost estimate, the CO will award a task order by sending a funded task order on Optional Form 347 with the task order SOW to the Contractor. The Contractor shall acknowledge receipt of each task order to the CO within three days of receipt.

(d) Task Orders may include their own special terms and conditions including clauses to which the contractor shall adhere. Task orders may include optional periods and/or optional quantities. All special terms and conditions will be included in the CO's request for task order proposal and in the awarded task order.

(e) Task orders may be placed at any point during the ordering period of the contract. Individual orders will have unique periods of performance which may include optional periods. No task order may have a period of performance that goes longer than 365 days beyond the end of the date of this contract.

(f) Task Orders may be solicited and awarded as either time-and-materials (T&M) type or firm-fixed-price (FFP) type. Task orders may be performance-based.

(g) Task Orders may be placed in accordance with the clause Regional Crossover (EPA-H-09-108) Tailored.

(h) Electronic ordering is authorized under this contract.

SECTION C – DESCRIPTION/SPECIFICATIONS/STATEMENT OF WORK

C.1 PERFORMANCE WORK STATEMENT (EPA-C-10-101)

The Contractor shall furnish the necessary personnel, material, equipment, services, and facilities (except as otherwise specified), to perform the Performance Work Statement (PWS) included in Attachment 1. Work will be ordered against the subject PWS through Contracting Officer issuance of task orders.

C.2 NOTICE REGARDING PROHIBITED CONTRACTOR ACTIVITIES ON EPA CONTRACTS (EPA-H-07-103)

The Contractor shall not perform any of the following activities on behalf of EPA in connection with this contract:

1. The actual preparation of Congressional testimony.
2. The interviewing or hiring of individuals for employment at EPA.
3. Developing and/or writing of Position Descriptions and Performance Standards.
4. The actual determination of Agency policy.
5. Participating as a voting member on a Performance Evaluation Board; participating in and/or attending Award Fee meetings.
6. Preparing Award Fee Letters, even under typing services contracts.
7. The actual preparation of Award Fee Plans.
8. The preparation of documents on EPA Letterhead other than routine administrative correspondence.
9. Reviewing vouchers and invoices for the purposes of determining whether costs, hours, and work performed are reasonable.
10. The preparation of Statements of Work, Work Assignments, Technical Direction Documents, Delivery Orders, or any other work issuance document under a contract that the Contractor is performing or may perform. Such a work issuance document, prepared by an EPA prime Contractor under an EPA prime contract for its subcontractor, is exempt from this prohibition.
11. The actual preparation of responses to audit reports from the Inspector General, General Accounting Office, or other auditing entities.
12. Preparing responses to Congressional correspondence.
13. The actual preparation of responses to Freedom of Information Act requests, other than routine, non-judgmental correspondence.
14. Any contract which authorizes a Contractor to represent itself as EPA to outside parties.
15. Conducting administrative hearings.
16. Reviewing findings concerning the eligibility of EPA employees for security clearances.
17. The actual preparation of an office's official budget request.

C.3 ADDITIONAL CONTRACTOR REQUIREMENTS (CO ADDED)

(a) The Contractor shall submit all analyses, options, recommendations, reports, and training materials required under this contract in draft for critical review and advance written approval by the Contracting Officer or the Contracting Officer's Representative (COR). When submitting materials or reports that contain recommendations, the Contractor shall explain or rank policy or action alternatives; describe procedures used to arrive at recommendations; summarize the substance of deliberations; report any dissenting views; list sources relied upon; and detail the methods and considerations upon which the recommendations are based.

(b) The Contractor shall not provide any legal services to EPA under this contract absent express written advance approval from EPA's Office of General Counsel. The Government will make all final regulatory, policy, and interpretive decisions resulting from Contractor-provided technical support under this contract and make the final decision on all Contractor-provided assessments and recommendations.

(c) The Contractor shall not publish or otherwise release, distribute, or disclose any work product generated under this contract without obtaining EPA's express advance written approval.

(d) In all contact with the public and Government officials, contractor personnel shall identify themselves as contractor employees working under contract to EPA. All contractor, subcontractor, and consultant personnel shall wear prominently displayed identification badges at all times when performing tasks under this contract and when interacting with EPA officials, federal agencies, state, tribal, and local governments, business, industry, and the general public. The badge shall contain the individual's name and company's name and logo. The office space occupied by contractor staff in any location that is also occupied by EPA employees shall be identified with appropriate signs that include the contractor's name.

(e) When participating in any event and/or discussion (e.g., answering the telephone, participating as a panel member or speaker), contractor staff shall verbally identify themselves as contractor personnel so there is no possible appearance of being EPA officials.

SECTION D – PACKAGING AND MARKING

[There are no clauses in this section.]

SECTION E – INSPECTION AND ACCEPTANCE

E.1 CONTRACT CLAUSES INCORPORATED BY REFERENCE

NOTICE: The following contract clauses pertinent to this Section are hereby incorporated by reference:

Inspection of Services—Fixed-Price (FAR 52.246-4) (Aug 1996)
Inspection of Services—Time-and-Material or Labor Hour (FAR 52.246-6) (May 2001)

E.2 HIGHER-LEVEL CONTRACT QUALITY REQUIREMENT (GOVERNMENT SPECIFICATION) (FAR 52.246-11) (FEB 1999)

The Contractor shall comply with the higher-level quality standard selected below.

(X)	Title	Number	Date	Tailoring
X	Specifications and Systems for Environmental Data Collection and Environmental Technology Programs	ANSI/ASQC E4	2004	See Below

As authorized by FAR 52.246-11, the higher-level quality standard ANSI/ASQC E4 is tailored as follows:

The solicitation and contract require the offeror/contractor to demonstrate conformance to ANSI/ASQC E4 by submitting the quality documentation described below.

In addition, after award of the contract, the Contractor shall revise, when applicable, quality documentation submitted before award to address specific comments provided by EPA and submit the revised documentation to the Contracting Officer's Representative.

After award of the contract, the Contractor shall also implement all quality documentation approved by the Government.

EPA quality requirements documents may be accessed electronically at: http://www.epa.gov/quality/.

A. Pre-award Documentation:

The offeror must submit the following quality system documentation as a separate and identifiable part of its technical proposal:

(X)	Documentation	Specifications	Due
X	Quality Management Plan	EPA Requirements for Quality Management Plans (QA/R-2) [dated 03/2001, reissued 05/2006]	With offer

This documentation will be prepared in accordance with the specifications identified above, or equivalent specifications defined by EPA. Work involving environmental data generation or

use shall not commence until the Government has approved this documentation and incorporated it into the contract.

B. Post-award Documentation:

The Contractor shall submit the following quality system documentation to the Contracting Officer's Representative at the time frames identified below:

(X)	Documentation	Specifications	Due
X	Quality Assurance Project Plan for Each Applicable Project	EPA Requirements for Quality Assurance Project Plans (QA/R-5) [dated 03/2001, reissued 05/2006]	As stated in Task Order

This documentation will be prepared in accordance with the specifications identified above or equivalent specifications defined by EPA. The Government will review and return the quality documentation, with comments, and indicating approval or disapproval. If necessary, the Contractor shall revise the documentation to address all comments and shall submit the revised documentation to the government for approval. The Contractor shall not commence work involving environmental data generation or use until the Government has approved the quality documentation.

SECTION F – DELIVERIES OR PERFORMANCE

F.1 CONTRACT CLAUSES INCORPORATED BY REFERENCE

NOTICE: The following contract clauses pertinent to this Section are hereby incorporated by reference:

Stop-Work Order (FAR 52.242-15) (Aug 1989)
Working Files (EPAAR 1552.211-75) (Apr 1984)
Management Consulting Services (EPAAR 1552.211-78) (Apr 1985)

F.2 PERIOD OF PERFORMANCE (EPA-F-12-101)

The current period of performance of this contract is from Date of Award through Date of Award + 3 Years exclusive of all required reports. The anticipated duration of this contract will consist of a Base Period of three years (1, 2, 3), an Option Period of two years (4, 5), and an Award Term of two years (6, 7) for a total of seven years.

Item #	Term	Period of Performance
0001	Contract Base Period	36 months from the date of Award
0002	Contract Option Period 1	24 months from the end of Base Period
0003	Contract Award Term 1	24 months from the end of Option Period 1

F.3 REPORTS OF WORK (EPAAR 1552.211-70) (OCT 2000)

The Contractor shall prepare and deliver reports, including plans, evaluations, studies, analyses and manuals in accordance with Attachment 7 – Reporting Requirements. Each report shall cite the contract number, identify the U.S. Environmental Protection Agency as the sponsoring agency, and identify the name of the contractor preparing the report.

The OMB clearance number for progress reports delivered under this contract is 2030–0005.

F.4 MONTHLY PROGRESS REPORT (EPAAR 1552.211-72) (JUN 1996) DEVIATION TAILORED

(a) The Contractor shall furnish 2 copies of the combined monthly technical and financial progress report stating the progress made, including the percentage of the project completed, and a description of the work accomplished to support the cost.

(b) The final Monthly Progress Report format shall be designed by the Contractor and approved by the Contracting Officer's Representative (COR). Format changes may include minor changes to content but will not result in a significant financial burden to the Contractor. The Contractor shall submit a draft version of the report to the COR for approval of the format within 14 days after the effective date of the contract. The COR will notify the Contractor if any changes to the draft report format are required. Once approved by EPA, each report format shall be followed

monthly. Any deviations/changes to the approved report format must be approved by the COR.

(c) The Contractor shall provide specific discussions that include difficulties encountered and corrective action taken during the reporting period, and anticipated activity with a schedule of deliverables for the subsequent reporting period.

(d) The Contractor shall provide a list of outstanding actions awaiting Contracting Officer authorization, noted with the corresponding task order, such as subcontractor/consultant consents, overtime approvals, and task order proposal approvals.

(e) The report shall specify financial status at the contract level as follows:
(1) For the current reporting period, provide the invoice amount claimed.
(2) For the current contract year and total contract period of performance, provide: the current contract ceiling amount, the amount obligated, the amount originally invoiced, the amount paid, the amount suspended, the amount disallowed, and the remaining approved amount. The remaining approved amount is defined as the total obligated amount, less the total amount originally invoiced, plus total amount disallowed.
(3) For the current reporting period and total contract period of performance, provide the total amount of costs incurred by contract-level Performance Work Statement (PWS) task area and in total.
(4) For each contract year, provide an estimate of the average hourly rate by contract-level PWS task area and in total.
(5) For the current reporting period and total contract period of performance, provide the total amount of costs incurred by task order and in total.
(6) For the total contract period of performance, provide a comparison of the funded amount across all task orders and the contract ceiling.
(7) *Labor hours*.
(i) For the current reporting period, provide a list of employees, their labor categories, their company (i.e. prime or subcontractor), and the numbers of hours worked.
(ii) For the next reporting period, provide the estimated direct labor hours and costs to be expended.
(8) *Materials*.
(i) For the current reporting period and total contract period of performance, provide the total costs incurred for materials (i.e. direct materials, subcontracts for which there is not a labor category, other direct costs, and applicable indirect costs) by type.
(ii) For the next reporting period, provide the estimated materials costs to be expended.
(9) *Unbilled allowable costs*. For the current reporting period and total contract period of performance, provide the total costs incurred but unbilled.

(f) The report shall specify financial status at the task order level as follows:
(1) For the current reporting period, provide the invoice amount claimed.
(2) For the current contract year and total task order period of performance, provide: the task order ceiling amount, the amount obligated, the amount originally invoiced, the amount paid, the amount suspended, the amount disallowed, and the remaining approved amount. The remaining approved amount is defined as the total obligated amount, less the total amount originally invoiced, plus total amount disallowed.

(3) For the current reporting period and total task order period of performance, provide the total amount of costs incurred by contract-level PWS task area and in total.
(4) For the current reporting period and total task order period of performance, provide the total amount of costs incurred by task order-level SOW task and in total.
(5) For the current reporting period and total task order period of performance, provide the average hourly rate by contract-level PWS task area and in total.
(6) For the total task order period of performance, provide a comparison of the funded amount and the task order ceiling.
(7) *Labor hours*.
(i) For the current reporting period, provide a list of employees, their labor categories, their company (i.e. prime or subcontractor), and the numbers of hours worked.
(ii) For the next reporting period, provide the estimated direct labor hours and costs to be expended.
(iii) For the remainder of the task order period of performance (not including option periods), provide the estimated direct labor hours and costs required to complete the task order.
(8) *Materials*.
(i) For the current reporting period and total task order period of performance, provide the total costs incurred for materials (direct materials, subcontracts for which there is not a labor category, other direct costs, and applicable indirect costs) by type.
(ii) For the next reporting period, provide the estimated materials costs to be expended.
(9) *Unbilled allowable costs*. For the current reporting period and total task order period of performance, provide the total costs incurred but unbilled.
(10) Provide a list of deliverables for each task order during the reporting period.

(g) This submission does not change the notification requirements of the Section B clause, Limitation of Government's Obligation (EPA-B-32-103) requiring separate written notice to the Contracting Officer.

(h) The reports shall be submitted to the following addresses on or before 7 business days after the end of each billing cycle. See EPAAR 1552.232–70, Submission of Invoices, paragraph (e), for details on the timing of submittals. Distribute reports as follows: See Attachment 7 – Reporting Requirements.

SECTION G – CONTRACT ADMINISTRATION DATA

G.1 CONTRACT CLAUSES INCORPORATED BY REFERENCE

NOTICE: The following contract clauses pertinent to this Section are hereby incorporated by reference:

Government Property (EPAAR 1552.245-70) (Sep 2009)

G.2 SUBMISSION OF INVOICES (EPAAR 1552.232-70) (OCT 1997) ALTERNATE I (JUN 1996) DEVIATION TAILORED

In order to be considered properly submitted, an invoice or request for contract financing payment must meet the following contract requirements in addition to the requirements of FAR 32.905:

(a) The Contractor shall submit the invoice or request for contract financing payment either in hard copy or electronic format.
(1) If submitting electronically, the Contractor shall follow the submission instructions at: http://www.epa.gov/ocfo/finservices/contracts.htm. One hard copy and one electronic copy via email of the invoice shall concurrently be sent to the Contract-Level COR.
(2) If submitting in hard copy format, the Contractor shall submit the invoice or request for contract financing payment to the following offices/individuals designated in the contract:
(i) One original to the EPA Finance Center shown in Block 25 on the cover of the contract; and
(ii) One copy to the Contract-Level COR.

(b) The Contractor shall prepare its invoice or request for contract financing payment on the prescribed Government forms. Standard Forms Number 1034, Public Voucher for Purchases and Services other than Personal, shall be used by contractors to show the amount claimed for reimbursement. Standard Form 1035, Public Voucher for Purchases and Services other than Personal - Continuation Sheet, shall be used to furnish the necessary supporting detail or additional information required by the Contracting Officer. The Contractor may submit self-designed forms which contain the required information.

(c)(1) The Contractor shall prepare a contract level invoice or request for contract financing payment in accordance with the invoice preparation instructions identified as a separate attachment in Section J of the contract. If contract work is authorized by individual task orders, the invoice or request for contract financing payment shall also include a summary of the current and cumulative amounts claimed by cost element for each task order and for the contract total, as well as any supporting data for each task order as identified in the instructions.
(2) The invoice or request for contract financing payment that employs a fixed rate feature shall include current and cumulative charges by contract labor category and by other major cost elements such as travel, equipment, and other direct costs. For current costs, each cost element shall include the appropriate supporting schedules identified in the invoice preparation

instructions.
(d)(1) The charges for subcontracts shall be further detailed in a supporting schedule showing the major cost elements for each subcontract.
(2) On a case-by-case basis, when needed to verify the reasonableness of subcontractor costs, the Contracting Officer may require that the Contractor obtain from the subcontractor cost information in the detail set forth in (c)(2). This information should be obtained through a means which maintains subcontractor confidentiality (for example, via sealed envelopes), if the subcontractor expresses confidential business information (CBI) concerns.

(e) Invoices or requests for contract financing payment must clearly indicate the period of performance for which payment is requested. Separate invoices or requests for contract financing payment are required for charges applicable to the basic contract and each option period.

(f) (1) Notwithstanding the provisions of the clause of this contract at FAR 52.216-7, Allowable Cost and Payment, invoices or requests for contract financing payment shall be submitted once per month unless there has been a demonstrated need and Contracting Officer approval for more frequent billings. When submitted on a monthly basis, the period covered by invoices or requests for contractor financing payments shall be the same as the period for monthly progress reports required under this contract.
(2) If the Contracting Officer allows submissions more frequently than monthly, one submittal each month shall have the same ending period of performance as the monthly progress report.
(3) Where cumulative amounts on the Monthly Progress Report differ from the aggregate amounts claimed in the invoice(s) or request(s) for contract financing payments covering the same period, the Contractor shall provide a reconciliation of the difference as part of the payment request.

G.3 KEY PERSONNEL (EPAAR 1552.237-72) (APR 1984) DEVIATION

(a) The Contractor shall assign to this contract the following key personnel:

Title	Name
Program Manager	(b)(4)
Task Leader for Data Validation	
Task Leader for Analytical Support	

(b) During the first one hundred and eighty (180) days of performance, the Contractor shall make no substitutions of key personnel unless the substitution is necessitated by illness, death, or termination of employment. The Contractor shall notify the Contracting Officer within 15 calendar days after the occurrence of any of these events and provide the information required by paragraph (c) of this clause. After the initial 180-day period, the Contractor shall submit the information required by paragraph (c) to the Contracting Officer at least 15 days prior to making any permanent substitutions.

(c) The Contractor shall provide a detailed explanation of the circumstances necessitating the proposed substitutions, complete resumes for the proposed substitutes, and any additional information requested by the Contracting Officer. Proposed substitutes should have comparable qualifications to those of the persons being replaced. The Contracting Officer will notify the Contractor within 15 calendar days after receipt of all required information of the decision on substitutions. This clause will be modified to reflect any approved changes of key personnel.

G.4 INDIRECT COSTS (EPAAR 1552.242-70) (APR 1984) DEVIATION

(a) In accordance with paragraph (d) of the 'Allowable Costs and Payment' clause, the final indirect cost rates applicable to this contract shall be established between the Contractor and the appropriate Government representative (EPA, other Government agency, or auditor), as provided by FAR 42.703(a). EPA's procedures require a Contracting Officer determination of indirect cost rates for its contracts. In those cases where EPA is the cognizant agency (see FAR 42.705-1), the final rate proposal shall be submitted to the cognizant audit activity and to the following:

Environmental Protection Agency
Financial Analysis and Oversight Service Center (FAOSC)
1200 Pennsylvania Avenue, N.W.
Mail Code: 3802R
Washington, D.C. 20460

The Contractor shall also follow the notification and cost impact procedures prescribed in paragraph (b) below. Where EPA is not the cognizant agency, the final rate proposal shall be submitted to the above cited address, to the cognizant audit agency, and to the designated Contracting Officer of the cognizant agency. Upon establishment of the final indirect cost rates, the Contractor shall submit an executed Certificate of Current Cost or Pricing Data (see FAR 15.804-4) applicable to the data furnished in connection with the final rates to the cognizant audit agency. The final rates shall be contained in a written understanding between the Contractor and the appropriate Government representative. Pursuant to the 'Allowable Costs and Payment' clause, the allowable indirect costs under this contract shall be obtained by applying the final agreed upon rate(s) to the appropriate bases.

(b) Until final annual indirect cost rates are established for any period, the Government shall reimburse the Contractor at billing rates established by the appropriate Government representative in accordance with FAR 42.704, subject to adjustment when the final rates established. The established billing rates are currently as follows:

Cost Center	Period	Rate	Base
(b)(4)	Base Period	(b)(4)	(b)(4)

These billing rates may be prospectively or retroactively revised by mutual agreement, at the request of either the Government or the Contractor, to prevent substantial overpayment or

underpayment.
(1) For any retroactive indirect cost rate adjustments (i.e., indirect costs already billed), including final indirect cost rate adjustments, the Contractor shall provide to the Cost Policy and Rate Negotiation Section, with copies to the current EPA Contracting Officers of active contracts, a cost impact statement showing the effect of the indirect cost rate changes for each contract. This statement shall compare the cost billed to the cost the Contractor proposes to bill.
(2) For prospective indirect cost rate adjustments only, the Contractor shall notify the current EPA Contracting Officers of the new proposed rates when it proposes rates to the cost Policy and Rate Negotiation Section.
(3) For either prospective or retroactive indirect cost rate adjustments, the Contractor shall provide the Cost Policy and Rate Negotiation Section with the names of the current EPA Contracting Officers for the affected contracts.

(c) Notwithstanding the provisions of paragraphs (a) and (b) above, ceilings are hereby established on indirect costs reimbursable under this contract. The Government shall not be obligated to pay the Contractor any additional amount on account of indirect costs in excess of the ceiling rates listed below:

Cost Center	Period	Rate	Base
N/A	N/A	N/A	N/A

G.5 GOVERNMENT-FURNISHED DATA (EPAAR 1552.245-71) (SEP 2009)

(a) The Government shall deliver to the Contractor the Government-furnished data described in the contract. If the data, suitable for its intended use, is not delivered to the Contractor, the Contracting Officer shall equitably adjust affected provisions of this contract in accordance with the "Changes" clause when:
(1) The Contractor submits a timely written request for an equitable adjustment; and
(2) The facts warrant an equitable adjustment.

(b) Title to Government-furnished data shall remain in the Government.

(c) The Contractor shall use the Government-furnished data only in connection with this contract.

(d) The following data will be furnished to the Contractor on or about the time indicated:

TBD at the Task Order level

G.6 CONTRACT ADMINISTRATION REPRESENTATIVES (EPA-G-42-101)

Contract-Level Contracting Officers Representatives (CORs) for this contract are as follows:

Primary COR:

Kim Brandon-Bazile
U.S. Environmental Protection Agency
Raritan Depot
2890 Woodbridge Avenue, MS215
Edison, NJ 08837
Phone: 732-321-6622
Email: Brandon-Bazile.Kim@epa.gov

Sergio Lopez-Luna
U.S. Environmental Protection Agency
Raritan Depot
2890 Woodbridge Avenue, MS215
Edison, NJ 08837
Phone: 732-321-6778
Email: Lopez.Sergio@epa.gov

Contracting Office officials responsible for administering this contract are as follows:

Contracting Officer:
Ross Miller
U.S. Environmental Protection Agency
Office of Acquisition Management
Superfund/RCRA Regional Procurement Operations Division
Laboratory Analysis Service Center
1200 Pennsylvania Avenue NW, 3805R
Washingon, DC 20460
Phone: 202-564-2617
Email: Miller.Ross@epa.gov

Contracting Officer:
Danny Uhr
U.S. Environmental Protection Agency
Office of Acquisition Management
Superfund/RCRA Regional Procurement Operations Division
Laboratory Analysis Service Center
1200 Pennsylvania Avenue NW, 3805R
Washingon, DC 20460
Phone: 202-564-6178
Email: Uhr.Danny@epa.gov

G.7 AUTHORIZED REPRESENTATIVE OF THE CONTRACT-LEVEL COR (EPA-G-42-102) TAILORED

(a) The Task Order Contracting Officer's Representative (TOCOR) referenced in the Technical Direction clause is the individual authorized by the Contracting Officer on an individual task order to:
(1) receive task order deliverables;
(2) receive copies of Monthly Progress Reports specific to the task order for which the TOCOR is authorized;
(3) attend meetings with the Contract-Level COR and Contractor in order to monitor progress of those task orders for which he/she is cognizant; and
(4) provide technical direction on those task orders subject to the limitations of the Technical Direction clause.

(b) The Task Monitor (TM) referenced in the Technical Direction clause may be assigned by the Contracting Officer to manage specific tasks under a task order. If assigned, the TM will have the same duties and responsibilities as the TOCOR specified in paragraph (a) above but limited to tasks for which they have been assigned.

G.8 DESIGNATION OF PROPERTY ADMINISTRATOR (EPA-G-45-101)

The property administrator for this contract is as follows:

Property Administrator:
Karen Murray
U.S. Environmental Protection Agency
Headquarters
William Jefferson Clinton Building
1200 Pennsylvania Avenue NW, 3204R
Phone: 202-564-3674
Email: Murray.Karen@epa.gov

The property administrator is the Contracting Officer's designated representative on property matters. The Contractor shall furnish all required information on property to the property administrator.

G.9 IDENTIFICATION OF SUBCONTRACTORS (CO ADDED)

The Contracting Officer has consented to the following subcontractors, in accordance with the Section I clause, Subcontracts (FAR 52.244-2):

Subcontractor	Subcontract Value	Subcontract Type
(b)(4)	(b)(4)	IDIQ/Fixed Labor Rates
		IDIQ/Fixed Labor Rates

SECTION H – SPECIAL CONTRACT REQUIREMENTS

H.1 CONTRACT CLAUSES INCORPORATED BY REFERENCE

NOTICE: The following contract clauses pertinent to this Section are hereby incorporated by reference:

Display of EPA Office of Inspector General Hotline Poster (EPAAR 1552.203-71) (Aug 2000)
Printing (EPAAR 1552.208-70) (Sep 2012)
Organizational Conflicts of Interest (EPAAR 1552.209-71) (May 1994) Alternate I (May 1994)
Notification of Conflicts of Interest Regarding Personnel (EPAAR 1552.209-73) (May 1994)
Compliance with EPA Policies for Information Resources Management (EPAAR 1552.211-79) (Jan 2012)
Care of Laboratory Animals (EPAAR 1552.223-72) (Oct 2000)
Project Employee Confidentiality Agreement (EPAAR 1552.227-76) (May 1994)
Payments—Fixed-Rate Services Contract (EPAAR 1552.232-73) (Oct 2000)
Screening Business Information for Claims of Confidentiality (EPAAR 1552.235-70) (Apr 1984)
Treatment of Confidential Business Information (EPAAR 1552.235-71) (Apr 1984)
Access to Federal Insecticide, Fungicide, and Rodenticide Act Confidential Business Information (EPAAR 1552.235-73) (Apr 1996)
Access to Toxic Substances Control Act Confidential Business Information (EPAAR 1552.235-75) (Apr 1996)
Treatment of Confidential Business Information (TSCA) (EPAAR 1552.235-76) (Apr 1996)
Data Security for Federal Insecticide, Fungicide and Rodenticide Act Confidential Business Information (EPAAR 1552.235-77) (Dec 1997)
Data Security for Toxic Substances Control Act Confidential Business Information (EPAAR 1552.235-78) (Dec 1997)
Release of Contractor Confidential Business Information (EPAAR 1552.235-79) (Apr 1996)
Access to Confidential Business Information (EPAAR 1552.235-80) (Oct 2000)
Paperwork Reduction Act (EPAAR 1552.237-75) (Apr 1984)
Government-Contractor Relations (EPAAR 1552.237-76) (Jun 1999)
Fill in (e)(1): 5 days / Fill in (e)(2): 5 days
Acquisition of Energy Star Compliant Microcomputers, Including Personal Computers, Monitors, and Printers (EPAAR 1552.239-103) (Apr 1996)

H.2 LIMITATION OF FUTURE CONTRACTING (ESAT) (EPAAR 1552.209-74) (APR 2004) ALTERNATE III (APR 2004) DEVIATION

(a) The parties to this contract agree that the Contractor will be restricted in its future contracting in the manner described below. Except as specifically provided in this clause, the Contractor shall be free to compete for contracts on an equal basis with other companies.

(b) If the Contractor, under the terms of this contract, or through the performance of work pursuant to this contract, is required to develop specifications or statements of work and such specifications or statements of work are incorporated into an EPA solicitation, the Contractor

shall be ineligible to perform the work described in that solicitation as a prime Contractor or subcontractor under an ensuing EPA contract.

(c) The Contractor and any subcontractors, during the life of this contract, shall be ineligible to enter into:
(1) an EPA Contract Laboratory Program (CLP) contract or subcontract;
(2) an EPA Sample Management Office (SMO) contract or subcontract;
(3) an EPA Quality Assurance Technical Support (QATS) contract or subcontract;
(4) an EPA contract or a subcontract which supports EPA's performance of Superfund Headquarters policy work including support for the analysis and development of regulations, policies, or guidance that govern, affect, or relate to the conduct of response action activities. Examples of such contracts include, but are not limited to, Superfund Management and Analytical support contracts, and Superfund Technical and Analytical support contracts;
(5) an EPA contract or subcontract which supports site-specific activities when the contractor is performing site-related activities as the ESAT contractor. Examples of such contracts include, but are not limited to: a site removal or remediation contract when the ESAT contractor is performing analysis of site-specific samples, a site-specific sample analysis contract or subcontract when the ESAT contractor is performing data validation of site-specific samples; and a site-specific technical support contract when the ESAT contractor is supporting the development or review of site-specific plans such as sampling plans, standard operating procedures, or quality assurance project plans;
(6) a contract, subcontract, or significant business or financial relationship with an entity whose financial interests may be directly affected by the work performed by the ESAT contractor. Examples of such entities include, but are not limited to, potentially responsible parties (PRPs) when the ESAT contractor is performing site-related activities to a site for which the entity is the PRP; and State, local and other laboratories when the ESAT contractor is tasked to perform audit support services or data review of that laboratory.
(7) These restrictions apply for the life of the contract. These restrictions may be waived by written authorization from the cognizant EPA Contracting Officer.

(d) The Contractor agrees in advance that if any bids/proposals are submitted for any work that would require written approval of the Contracting Officer prior to entering into a contract subject to the restrictions of this clause, then the bids/proposals are submitted at the Contractor's own risk. Therefore, no claim shall be made against the Government to recover bid/proposal costs as a direct cost whether the request for authorization to enter into the contract is denied or approved.

(e) To the extent that the work under this contract requires access to proprietary or confidential business or financial data of other companies, and as long as such data remains proprietary or confidential, the Contractor shall protect such data from unauthorized use and disclosure.

(f) The Contractor agrees to insert in each subcontract or consultant agreement placed hereunder, except for subcontracts or consultant agreements for nondiscretionary technical or engineering services, including treatability studies, well drilling, fence erecting, plumbing, utility hookups, security guard services, or electrical services, provisions which shall conform substantially to the language of this clause, including this paragraph (f) unless otherwise

authorized by the Contracting Officer. The Contractor may request in writing that the Contracting Officer exempt from this clause a particular subcontract or consultant agreement for nondiscretionary technical or engineering services not specifically listed above, including laboratory analysis. The Contracting Officer will review and evaluate each request on a case-by-case basis before approving or disapproving the request.

(g) If the Contractor seeks an expedited decision regarding its initial future contracting request, the Contractor may submit its request to both the Contracting Officer and the next administrative level within the Contracting Officer's organization.

(h) A review process available to the Contractor when an adverse determination is received shall consist of a request for reconsideration to the Contracting Officer or a request for review submitted to the next administrative level within the Contracting Officer's organization. An adverse determination resulting from a request for reconsideration by the Contracting Officer will not preclude the Contractor from requesting a review by the next administrative level. Either a request for review or a request for reconsideration must be submitted to the appropriate level within 30 calendar days after receipt of the initial adverse determination.

H.3 AWARD TERM INCENTIVE (EPAAR 1552.216-77) (FEB 2008)

(a) *General.* This contract may be extended as set forth in paragraph (b) based on overall contractor performance as evaluated in accordance with the Clause entitled "Award Term Incentive Plan," provided the Agency has a need for the effort at or before the time an award term is to commence, and if the contractor receives notice of the availability of funding for an award term period pursuant to the "Award Term Availability of Funds" clause. The Contracting Officer is responsible for the overall award term evaluation and award term decision. The Contracting Officer will unilaterally decide whether or not the contractor is eligible for an award term extension, and in conjunction with the Contracting Officer's Representative, will determine the need for continued performance and funding availability.

(b) *Period of performance.* Provided the contractor has achieved the performance measures, e.g., acceptable quality levels, set forth in the clause "Award Term Incentive Plan," the Contracting Officer may extend the contract by exercising 1 additional award term incentive period of 24 months (Years 6 and 7). The total maximum period of performance under this contract, if the Government exercises any option periods and all award term incentive periods is 7 years.

(c) *Right not to grant or cancel the award term incentive.*

(1) The Government has the unilateral right not to grant or to cancel award term incentive periods and the associated award term incentive plans if—

(i) The Contracting Officer has failed to initiate an award term incentive period, regardless of whether the contractor's performance permitted the Contracting Officer to consider initiating the award term incentive period; or

(ii) The contractor has failed to achieve the performance measures for the corresponding evaluation period; or

(iii) The Government notifies the contractor in writing it does not have funds available for the award term incentive periods; or

(iv) The Government no longer has a need for the award term incentive period at or before the time an award term incentive period is to commence.

(2) When an award term incentive period is not granted or cancelled, any—

(i) Prior award term incentive periods for which the contractor remains otherwise eligible are unaffected.

(ii) Subsequent award term incentive periods are thereby also cancelled.

(d) Cancellation of an award term incentive period that has not yet commenced for any of the reasons set forth in paragraph (c) of this clause shall not be considered either a termination for convenience or termination for default, and shall not entitle the contractor to any termination settlement or any other compensation. If the award term incentive is cancelled, a unilateral modification will cite this clause as the authority.

(e) *Award term incentive administration.* The award term incentive evaluation(s) will be completed in accordance with the schedule in the Award Term Incentive Plan. The contractor will be notified of the results and their eligibility to be considered for the respective award term incentive no later than 120 days after an evaluation period.

(f*) Review process.* The contractor may request a review of an award term incentive evaluation which has resulted in the contractor being ineligible for the award term incentive. The request shall be submitted in writing to the Contracting Officer within 15 days after notification of the results of the evaluation.

H.4 AWARD TERM INCENTIVE PLAN (EPAAR 1552.216-78) (FEB 2008) ALTERNATE I (FEB 2008) TAILORED

(a) The Award Term Incentive Plan provides for the evaluation of performance, and, together with Agency need and availability of funding, serves as the basis for award term decisions. The Award Term Incentive Plan may be unilaterally revised by the Government. Any changes to the Award Term Incentive Plan will be made in writing and incorporated into the contract through a unilateral modification citing this clause. The Government will consult with the contractor prior to the issuance of a revised Award Term Incentive Plan, but is not required to obtain the contractor's consent to the revisions.

(b) *Award Term Evaluation.* The award term evaluation and decision will be made by the Government following the 3-year base period. The Contractor's average past performance score over the 3-year base period as entered into the Contractor Performance Assessment Reporting System (CPARS) will be used as the basis for award term evaluations. The Government will submit a separate Contractor Performance Assessment Report for each year of each task order placed under the contract. At the conclusion of the 3-year base period of the contract, an average past performance score shall be determined by using the ratings entered into CPARS for all task orders under the contract. CPARS requires the Government to evaluate each contractor on the following 6 criteria: Quality of Product or Service, Schedule, Cost Control, Business Relations, Management of Key Personnel, and Utilization of Small Business. CPARS uses an adjectival rating system for the Government to assign past performance ratings to these criteria; for

purposes of this award term incentive plan, those adjectives will be converted to numerical scores to be used in calculating the award term incentive as follows:

CPARS Adjectival Rating	**Numerical Score**
Exceptional	4
Very Good	3
Satisfactory	2
Marginal	1
Unsatisfactory	0

(c) *Acceptable Quality Level.* To reach the Acceptable Quality Level (AQL) to earn the award term incentive, the Contractor must achieve an average past performance score of no less than 3.00 for the 3-year base period of the contract. The average past performance score shall be obtained by adding the scores given to all past performance criteria for all task orders under the contract for the 3-year base period and dividing that sum by the number of criteria (6), by the number of task orders (X), and by the number of years (3). Here is an example assuming 3 task orders for the 3-year base period:

	Task Order 1			**Task Order 2**			**Task Order 3**		
CPARS Criteria	**Year 1 Score**	**Year 2 Score**	**Year 3 Score**	**Year 1 Score**	**Year 2 Score**	**Year 3 Score**	**Year 1 Score**	**Year 2 Score**	**Year 3 Score**
Quality of Product or Service	3	4	4	3	4	4	2	3	2
Schedule	3	4	4	4	4	4	3	4	3
Cost Control	3	3	4	4	3	3	2	3	2
Business Relations	4	4	4	4	4	3	3	4	3
Management of Key Personnel	3	2	3	3	3	3	3	3	2
Utilization of Small Business	3	3	4	3	3	4	3	3	4
Total Score for Each Year and Each Task Order	19	20	23	21	21	21	16	20	16
Total Score for Each Task Order	62			63			52		
Total Score for Evaluation Period	177								
÷ Number of Criteria	÷ 6								
÷ Number of Task Orders	÷ 3								
÷ Number of Years	÷ 3								
AVERAGE PAST PERFORMANCE SCORE	**3.28**								

(d) If the average past performance score as determined under paragraph (c) meets or exceeds the AQL, the contractor shall be eligible for the award term period contained in this contract.

H.5 AWARD TERM AVAILABILITY OF FUNDS (EPAAR 1552.216-79) (FEB 2008)

Funds are not presently available for any award term. The Government's obligation under any award term is contingent upon the availability of appropriated funds from which payment can be

made. No legal liability on the part of the Government for any award term payment may arise until funds are made available to the Contracting Officer for an award term and until the Contractor receives notice of such availability, to be confirmed in writing by the Contracting Officer.

H.6 OPTION TO EXTEND THE EFFECTIVE PERIOD OF THE CONTRACT—INDEFINITE DELIVERY/INDEFINITE QUANTITY CONTRACT (EPAAR 1552.217-76) (APR 1984) TAILORED

(a) The Government has the option to extend the effective period of this contract for 1 additional option period of 24 months (Years 4 and 5). If more than 60 days remain in the contract effective period, the Government, without prior written notification, may exercise this option by issuing a contract modification. To unilaterally exercise this option within the last 60 days of the effective period, the Government must issue written notification of its intent to exercise the option prior to that last 60-day period. This preliminary notification does not commit the Government to exercising the option.

(b) If the option period is exercised, the Section F clause, Period of Performance, will be modified to extend the effective period of this contract through the last day of the option period.

H.7 SMALL DISADVANTAGED BUSINESS TARGETS (EPAAR 1552.219-73) (OCT 2000)

(a) In accordance with FAR 19.1202-4(a) and EPAAR 1552.219-72, the following small disadvantaged business (SDB) participation targets proposed by the Contractor are hereby incorporated into and made part of the contract:

Contractor Targets	NAICS Industry Subsector(s)	Dollars	Percentage of Total Contract Value
Total Prime Contractor Targets (Including joint venture partners and team members)	N/A	N/A	N/A
Total Subcontractor Targets	541380 541620	(b)(4)	(b)(4)

(b) The following specifically identified SDB(s) was (were) considered under the Section-SDB participation evaluation factor or subfactor (continue on separate sheet if more space is needed):

(1) (b)(4)
(2)
(3) _____
(4) _____
(5) _____

The Contractor shall promptly notify the Contracting Officer of any substitution of firms if the new firms are not SDB concerns.
(c) In accordance with FAR 52.219-25, Small Disadvantaged Business Participation Program-Disadvantaged Status and Reporting, the Contractor shall report on the participation of SDB concerns in the performance of the contract no less than thirty (30) calendar days prior to each annual contractor performance evaluation or as otherwise directed by the contracting officer.

H.8 TECHNICAL DIRECTION (EPAAR 1552.237-71) (AUG 2009) TAILORED

(a) The Contract-level Contracting Officer's Representative (COR) is the primary representative of the Contracting Officer authorized to provide technical direction on contract performance.

(b) Individuals other than the COR may be authorized to provide technical direction. If individuals other than the COR are authorized to provide technical direction, their names will be specified in the contract or task order as appropriate. A Task Order COR (TOCOR) or Task Manager (TM) is authorized to provide technical direction, subject to the limitations set forth below, only on his/her task order.

(c) Technical direction includes:
(1) Direction to the Contractor which assists the Contractor in accomplishing the Performance Work Statement (PWS).
(2) Comments on and approval of reports or other deliverables.

(d) Technical direction must be within the contract PWS and the task order SOW. The COR or any other technical representative of the Contracting Officer (CO) does not have the authority to issue technical direction which:
(1) institutes additional work outside the scope of the contract or task order;
(2) constitutes a change as defined in the "Changes" clause;
(3) causes an increase or decrease in the estimated cost of the contract or task order
(4) alters the period of performance; or
(5) changes any of the other express terms or conditions of the contract or task order.

(e) Technical direction will be issued in writing or confirmed in writing within five (5) calendar days after verbal issuance. One copy of the technical direction memorandum will be forwarded to the CO and the COR.

(f) If, in the Contractor's opinion, any instruction or direction by the Contracting Officer's Representative(s) falls within any of the categories defined in paragraph (d) of the clause, the contractor shall not proceed but shall notify the contracting officer in writing within 3 days after receiving it and shall request that the contracting officer take appropriate action as described in this paragraph. Upon receiving this notification, the contracting officer shall:

(1) Advise the Contractor in writing as soon as practicable, but no later than 30 days after receipt of the contractor's notification, that the technical direction is within the scope of the contract effort and does not constitute a change under the "Changes" clause of the contract;

(2) Advise the Contractor within a reasonable time that the government will issue a written modification to the contract; or

(3) Advise the Contractor that the technical direction is outside the scope of the contract and is thereby rescinded.

(f) A failure of the Contractor and CO to agree as to whether the technical direction is within the scope of the contract, or a failure to agree upon the contract action to be taken with respect thereto, shall be subject to the provisions of the clause entitled "Disputes" in this contract.

(g) Any action(s) taken by the Contractor, in response to direction given by unauthorized personnel, shall be at the contractor's risk.

H.9 RETENTION AND AVAILABILITY OF CONTRACTOR FILES (EPA-H-04-101) TAILORED

(a) This contract contains the Section I clause Audit and Records—Negotiation wherein the Contractor is required to maintain and make available to the Contracting Officer or representative of the Contracting Officer at its office at all reasonable times the books, records, documents, and other evidence relating to this contract (including personnel utilization records, site records, and accounting procedures and practices sufficient to reflect properly all costs claimed to have been incurred under this contract). Such files shall be made available for examination, audit or reproduction.
(b) The Contractor is advised that the Government may file suit against potential responsible parties for costs incurred relative to site-related response activities. In such proceedings, the contractor's cost and performance records may become an integral part of the Government's case.

(c) Accordingly, due to the extended nature of court proceedings and EPA audit requirements, the Contractor shall make available to the Government, and only to the Government, the records described in (a) and (b) above for a period of ten (10) years after final payment under the contract.

(d) In addition, the contractor shall make available to the Government, and only to the Government, the records relating to any appeals, litigation or the settlement of claims with third parties and which relate to this contract (i.e., cost recovery) until such appeals, litigation, or claims are disposed.

(e) The contractor shall not destroy original records relating to the contract until:
(1) all litigation involving the records has been finally settled and approval is obtained from the Contracting Officer, or
(2) ten (10) years have passed from the date of final payment, and no litigation involving the records has been instituted, and approval of the Contracting Officer is obtained.
In no event should individual records be destroyed if litigation relating to such records is in-process or pending.

(f) From time to time, the Government may, in support of litigation cases, have the need for the

Contractor to research and make available such records in a form and manner not normally maintained by the Contractor. Such effort shall be deemed to be within the scope of work under this contract. If this effort is required after performance of this contract, a separate negotiated procurement action may be instituted with the Contractor.

H.10 ELECTRONIC SIGNATURES (EPA-H-04-102)

(a) The Government and Contractor agree to accept one another's electronic signature on documents transmitted electronically under this contract. All electronically signed documents must be reproducible in a human-intelligible form and clearly indicate:
(1) that the document was electronically signed,
(2) who signed the document,
(3) the title of the electronic signer, and
(4) the date and time it was signed.

(b) The parties shall not deny the legal effect, validity, or enforceability of the records containing electronic signatures they transmit and receive on the ground that such records, including the signature(s), are in electronic form. The receipt date and time of any record shall be the date and time the record is received at the EPA external Lotus Notes Gateway. In the event either party experiences a major system failure which renders the ability to transmit electronic signatures inoperable for more than one business day, the party experiencing the system failure must promptly notify the other party by telephone or by facsimile. While the system is inoperable, the parties may exchange records by facsimile transmissions, with signed originals and copies sent by surface mail or delivered by hand.

(c) The following types of documents shall be issued as signed, paper originals only: None.

(d) At the request of either party, the other party shall provide a duplicate paper original, with a handwritten signature, of the following types of documents: None.

(e) Each party agrees that it will promptly notify the other party of any unauthorized access to, or loss or destruction of electronic records sent or received. Depending on the seriousness of the lapse in computer system security, the Contracting Officer may modify or suspend the contractor's authorization to use electronic signatures.

H.11 IDENTIFICATION OF ON-SITE CONTRACTOR EMPLOYEES (EPA-H-07-102)

All Contractor, subcontractor, and consultant personnel shall wear prominently displayed identification badges at all times when performing work on EPA property or attending meetings in the performance of this contract. The badge shall contain the individual's name, the company name and logo. When participating in such meetings (e.g., as a speaker, panel member), those individuals in Contractor employ must supplement physical identification (e.g., badges, place markers) with verbal announcements so that it is clear to the assembled group that they are employees of the Contractor, not Agency staff members. In addition, when working on EPA property, all contractor, subcontractor, and consultant personnel shall have signs visible on their desks or at their work sites that clearly state that they are not EPA employees.

H.12 CONTRACTOR DISCLOSURE REQUIREMENTS FOR CONFLICT OF INTEREST (EPA-H-09-101)

In submitting notices of potential corporate, affiliate or personal conflicts of interest, the Contractor shall answer each of the following questions as thoroughly as possible. If necessary, the Contracting Officer may request additional information. If a particular question does not apply to the particular situation, the Contractor shall reply by writing "Not Applicable" rather than by making no response. The Contractor shall forward a copy of the company's answers to both the Contracting Officer and the Contracting Officer's Representative. Subcontractors must submit their answers to the EPA through the prime contractor. This information, however, may be marked confidential and sent in a sealed and numbered envelope which is to be opened only by the Contracting Officer. All EPA decisions regarding the notifications will be sent to the prime contractor in writing. The prime contractor shall be responsible for forwarding the Contracting Officer's decision to the subcontractor:

1. During the past three (3) calendar years, has the company or any employees that will be working at this site performed work at this site/facility? If the answer is "Yes", describe, in detail, the nature of work the company or employee(s) performed and provide the names of the employee(s); the dates the work took place and identify the client(s) for whom the work was performed. Note: For reporting purposes, all clients including Commercial, Federal, State or local entities other than the EPA should be included in the check for potential conflict of interest.
2. For any work identified in Question 1 that was performed by the company, provide the approximate dollar value of work performed for each client as well as the company's annual sales by fiscal year.
3. With whom has this potential conflict of interest been discussed (include EPA personnel, legal advisors, etc.)?
4. Provide, if relevant, information regarding how the company's organizational structure and/or management system affects its knowledge of possible conflicts of interest relating to other divisions or sections of the organization and how that structure or system could prevent or mitigate/neutralize potential conflicts of interest.
5. Provide an update of any significant change in control or ownership of the company since the submission of information for responsibility determination.
6. Provide any additional information which may be pertinent to this request. When submitting responses to these questions, the Contractor shall provide the name and telephone number of someone in the company who is knowledgeable with regard to this notice of potential conflict of interest.

H.13 TASK ORDER CONFLICT OF INTEREST CERTIFICATION (EPA-H-09-106) TAILORED

(a) The Contractor shall provide a conflict of interest (COI) certification for each new task order under this contract. The Contractor shall include the COI certification in its task order proposal when responding to the Government's request for a task order proposal.

(b) Before submitting the COI certification, the Contractor shall search its records accumulated, at a minimum, over the past three years immediately prior to the receipt of the task order. In the

COI certification, the Contractor must certify to the best of the Contractor's knowledge and belief that all actual or potential organizational conflicts of interest have been reported to the Contracting Officer or that to the best of the Contractor's knowledge and belief, no actual or potential organizational conflicts of interest exist. In addition, the Contractor must certify that its personnel who will perform work under this task order or relating to this task order have been informed of their obligation to report personal and organizational conflicts of interest to the Contractor. The certification shall also include a statement that the Contractor recognizes its continuing obligation to identify and report any actual or potential conflicts of interest arising during performance of this task order.

(c) If the task order contains option periods, the contractor shall resubmit their COI certification in accordance with paragraph (b) no less than 30 days prior to the end of each task order period.

H.14 UNPAID FEDERAL TAX LIABILITY & FELONY CRIMINAL VIOLATION CERTIFICATION (EPA-H-09-107) (APR 2012)

(a) In order to meet the requirements of Sections 433 and 434 of Division E of the Consolidated Appropriations Act, 2012 (Pub.L. 112-74); 2013 Continuing Appropriations Resolution (Pub.L. 112-175); Consolidated and Further Continuing Appropriations Act, 2013 (Pub.L. 113-6); Continuing Appropriations Act, 2014 (Pub.L. 113-46), and subsequent relevant appropriations acts, the contractor shall provide the contracting officer a certification whereby the contractor certifies:

(i) It is not a corporation that has been convicted (or had an officer or agent of such corporation acting on behalf of the corporation convicted) of a felony criminal violation under any Federal law within the preceding 24 months; and

(ii) It is not a corporation that has any unpaid Federal tax liability that has been assessed, for which all judicial and administrative remedies have been exhausted or have lapsed, and that is not being paid in a timely manner pursuant to an agreement with the authority responsible for collecting the tax liability.

(b) Failure of the contractor to furnish a certification or provide such additional information as requested by the contracting officer may render the contractor ineligible for FY 2012, 2013, 2014 or subsequent FY contract funding.

(c) The contractor has a continuing obligation to update the subject certification as required.

H.15 REGIONAL CROSSOVER (EPA-H-09-108) TAILORED

(a) The Government may order ESAT services for this Region through any of the other Regional ESAT contract if:

(1) the Contractor has a potential or actual conflict of interest in performing under a specific task order;

(2) the maximum contract ceiling has been reached or is about to be reached;

(3) the Government considers the Contractor's performance unsatisfactory; or

(4) the Contracting Officer determines that it is in the best interest of the Government for the acquisition of new methodologies that cannot be fulfilled by the current Contractor.

(b) The Contractor agrees to accept task orders for ESAT services from any other EPA Region, provided the amount of such services, in addition to other work performed under this contract, does not exceed the maximum contract ceiling specified in this contract. If services to be performed in another Region are ordered by the Government, the terms and conditions for that Region shall be mutually agreed upon by the Contractor's representative and the EPA Contracting Officer at the time of the placement of the task order.

H.16 GOVERNMENT RIGHTS UNDER CERCLA (EPA-H-11-103)

The award of this contract does not constitute a waiver of the Government's right to bring action against any person, or persons, including the Contractor, for liability under any provision of the Comprehensive Environmental Response, Compensation, and Liability Act (CERCLA). Furthermore, if the Contractor is determined to be liable under Section 107 of CERCLA, the Government may set-off the amount of any such liability against amounts otherwise due and payable under the contract. The disclosure of any potential conflicts of interest as required in the Conflict of Interest Notification clauses in this contract shall not be construed or interpreted as an admission by the Contractor of any liability under CERCLA. Further, nothing contained within this contract shall be deemed, construed and/or interpreted as a waiver by the Contractor of any defenses it may have or may wish to assert in any action by the Government under CERCLA.

H.17 CONFIDENTIALITY OF INFORMATION (EPA-H-27-102)

Any data that is generated or obtained during contract performance shall be considered confidential, and shall not be disclosed to anyone other than Environmental Protection Agency employees without the prior written approval of the Contracting Officer. Nor shall any such data be used for any other purpose except in connection with this contract. Any data generated or obtained during contract performance shall be delivered to the Government at the request of the Contracting Officer.

H.18 APPLICATION OF RIGHTS IN DATA—SPECIAL WORKS CLAUSE (EPA-H-27-103)

The Rights in Data—Special Works clause (FAR 52.227-17) shall apply to task orders that are "primarily for the production or compilation of data (other than limited rights data or restricted computer software) for the Government's own use" or when the Contracting Officer determines that there is a specific need to limit data distribution first produced under a particular work assignment or task order. The Rights in Data—Special Works clause (FAR 52.227-17) shall apply to task orders which are included in the examples set forth in FAR 27.405(a)(1) and also to other task orders specifically identified by the Contracting Officer.

H.19 APPROVAL OF CONTRACTOR TRAVEL (EPA-H-31-104) TAILORED

(a) For purposes of this clause, the term "travel" does not include local transportation. "Local Transportation" is defined as travel within 50 miles from the contractor personnel's assigned work location for performance of the contract that does not involve an overnight stay.

(b) Any Contractor travel which may be directly charged to the contract must be authorized in advance by the Contract-Level COR. This approval shall be separate from the process associated with the approval of task order proposals. (See paragraph (f) below).

(c) Travel shall be authorized under this contract only when the travel is required to provide a direct service or specific product to the Government that is identified in the contract-level Performance Work Statement (PWS) or any applicable task order Statement of Work (SOW). The contractor shall identify the need for travel in any task order proposal submitted and shall clearly identify in an accompanying narrative the relationship of the travel to the direct service required by the Government. Until the Contract-Level COR specifically approves the travel proposed under a task order, the contractor shall not perform travel. Travel and associated costs for such travel (e.g. lodging, per diem, and incidental expenses) shall be allowable only in accordance with the limitations of FAR 31.205-43 and FAR 31.205-46.

(d) Travel expenses for Federal employees shall not be an allowable cost under this contract. Travel approval shall not be rendered for any personnel (including, for example, State or local government officials, academicians, etc.) except for employees of the Contractor, or an authorized subcontractor or consultant, who are performing a bona fide function to accomplish the task order Statement of Work.

(e) To obtain the approval for travel, the Contractor shall submit a separate written request to the Contract-Level COR for each instance of travel for the Contractor (including subcontractors/consultants) that is contemplated as a direct charge under the contract. The request shall include at a minimum the following information:
(1) *Individual(s) traveling.* Identify name, position and affiliation as a contractor/subcontractor employee or authorized consultant;
(2) *Description of circumstances necessitating the travel.* Identify the task order(s) that will benefit from the travel and detail the correlation of the travel to the requirements of the task order Statement of Work; and
(3) *Identify the estimated cost and include a cost breakdown.* Explain why this is the most cost effective means to fulfill the contract requirements.

(f) Approval of task order proposals that include travel as material cost shall not be construed to mean the travel is approved. Separate approval for Contractor travel shall be obtained from the Contract-Level COR.

(g) The Contractor shall conduct all travel within the continental United States (CONUS) in accordance with the Federal Travel Regulations (FTR) in affect at the time of the travel. The Contractor shall conduct all travel outside the continental United States (OCONUS) in accordance with the Joint Travel Regulations (JTR) in affect at the time of the travel.

H.20 APPROVAL OF TRAINING (EPA-H-31-105) TAILORED

(a) The Contractor shall provide and maintain a qualified staff of personnel to meet the requirements of the contract-level Performance Work Statement (PWS). The Contractor shall provide training to keep its personnel abreast of changes to the science and/or technology associated with the requirements of the contract. In addition, the Contractor shall ensure that its personnel receive appropriate safety, health and environmental training in accordance with Federal, state and local requirements prior to assigning any task that require such training. The Contractor shall provide documentation of such training upon the request of the Contract-Level COR and/or Contracting Officer. The Government will not directly reimburse the cost for contractor employees to meet or maintain minimal contract requirements or to obtain and sustain an appropriate level of professionalism. Any direct charges for training will only be considered for reimbursement under this contract by compliance with the procedures set forth in paragraph (b) below.

(b) There may be occasions when it is determined to be in the best interest of the Government to reimburse the contractor for the direct cost of training associated with a requirement that represents a unique Government need unrecognized at the time of contract award. When such circumstances occur, the Contractor shall secure the Contract-Level COR's written approval by submitting a written request that includes, at a minimum the following information:
(1) *Individual(s) to be trained.* Identify name, position and affiliation as a contractor/subcontractor employee or authorized consultant;
(2) *Description of circumstances necessitating the training*. Identify the task order(s) that will benefit from the training and detail the correlation of the training to the requirements of the task order Statement of Work; and
(3) *Identify the estimated cost and include a cost breakdown.* Explain why this is the most cost effective means to fulfill the contract requirements.

(c) Approval of task order proposals that include training as a material cost shall not be construed to mean the training is approved. Separate approval for Contractor training shall be obtained from the Contract-Level COR.

H.21 ANNUAL ALLOCATION OF NON-SITE-SPECIFIC COSTS (EPA-H-42-101)

(a) The contractor shall submit an annual allocation report. The purpose of this report is to allocate all payments made by the EPA to the contractor for non-site-specific activities to the sites worked on by the contractor during the accounting year. Examples of non-site-specific activities include program management, contract fees (base, fixed, and award), and other tasks required of the contractor for non-site-specific work.

(b) The contractor shall refer to Attachment 9 – Instructions for Performing the Annual Allocation of Non-Site-Specific Costs for instructions for completing the annual allocation report requirements. This Attachment also provides a detailed explanation of the allocation process and methodology.

(c) Submissions required of the contractor shall be sent to the following address:
Program Costing Staff
Office of Financial Management
U. S. Environmental Protection Agency
1200 Pennsylvania Avenue, NW
Ronald Reagan Building, MC 2733R
Washington, DC 20460

(d) Questions regarding any Annual Allocation requirements should be referred to the Program Costing Staff at (202) 564-3145.

H.22 MOTOR VEHICLE USAGE (ESAT) (CO ADDED)

(a) In the event that an ESAT task order statement of work requires one or more motor vehicles for contract performance, the Contractor shall proceed in the following order of precedence.
(1) The Contractor shall use a Government-owned vehicle in accordance with 41 CFR § 102-34.215 if available and if approved by the COR.
(2) The Contractor shall utilize its own inventory of motor vehicles to satisfy the task order requirement. Allowable costs that may be billed to the Government include, but are not limited to, fuel, maintenance, and insurance costs.
(3) The Contractor shall lease or purchase motor vehicles in accordance with 41 CFR § 101-26.501, Purchase of New Motor Vehicles. Prior to any lease or purchase of motor vehicles, the Contractor shall submit to the Contracting Officer a Request for Government Property in accordance with EPAAR 1552.245-70 Government Property.

(b) Contractor requests for the lease or purchase of motor vehicles will be in accordance with FAR Part 51, Use of Government Sources by Contractors, and will be considered individually by the Contracting Officer at the task order level. Before permission to lease or purchase motor vehicles is granted, the Contractor shall complete a purchase versus lease analysis and submit the final analysis to the Contracting Officer for approval. Management, control, maintenance and registration of Government leased or purchased is pursuant to 41 CFR § 102-34, Motor Vehicle Management.

(c) The EPA encourages its contractors to promote green initiatives; among them energy and fuel conservation. All effort shall be made by the contractor to procure alternative-fuel vehicles and alternative fuels when procuring fleet vehicles from the General Services Administration (GSA) or alternate authorized source. The Department of Energy's Alternative Fuels Data Center (AFDC) is an online source of guidance, information, data, and tools related to the deployment of alternative fuels and green vehicles. The AFDC is found at http://www.afdc.energy.gov/index.html.

H.23 CLAUSES NOT APPLICABLE TO TIME-AND-MATERIALS TYPE TASK ORDERS (CO ADDED)

During Task Order performance, the Contractor shall adhere to all contract-level clauses applicable to task orders, however the following list of contract clauses do not apply to task orders that are time-and-materials (T&M) type:

Regulation	Clause No.	Date	Clause Title
FAR	52.229-3	Feb 2013	Federal, State, and Local Taxes
FAR	52.232-1	Apr 1984	Payments
FAR	52.232-8	Feb 2002	Discounts for Prompt Payment
FAR	52.232-11	Apr 1984	Extras
FAR	52.243-1	Aug 1987	Changes—Fixed-Price Alternate I (Apr 1984)
FAR	52.246-4	Aug 1996	Inspection of Services—Fixed-Price
FAR	52.249-2	Apr 2012	Termination for Convenience of the Government (Fixed-Price)
FAR	52.249-8	Apr 1984	Default (Fixed-Price Supply and Service)
FAR	52.249-14	Apr 1984	Excusable Delays

H.24 CLAUSES NOT APPLICABLE TO FIRM-FIXED-PRICE TASK ORDERS (CO ADDED)

During Task Order performance, the Contractor shall adhere to all contract-level clauses applicable to task orders, however the following list of contract clauses do not apply to task orders that are firm-fixed-price (FFP) type:

Regulation	Clause No.	Date	Clause Title
FAR	52.232-7	Aug 2012	Payments Under Time-and-Materials and Labor-Hour Contracts
FAR	52.216-7	Jun 2013	Allowable Cost and Payment
FAR	52.243-3	Sep 2000	Changes—Time-And-Materials or Labor-Hours
FAR	52.246-6	May 2001	Inspection—Time-And-Material and Labor-Hour
FAR	52.249-6	May 2004	Termination (Cost-Reimbursement) Alternate IV (Sep 1996)
EPAAR	1552.237-71	Aug 2009	Technical Direction Tailored

H.25 ENVIRONMENTALLY PREFERABLE PRACTICES (EPA-H-23-101)

The contractor shall, to the greatest extent practicable, utilize environmentally preferable practices in its course of business. "Environmentally preferable" is defined as products or services that have a lesser or reduced effect on human health and the environment when compared with competing products or services that serve the same purpose. This comparison may consider raw materials acquisition, production, manufacturing, packaging, distribution, reuse, operation, maintenance, or disposal of the product or service. Consideration of

environmentally preferable practices must be consistent with price, performance, availability, and safety conditions.

H.26 UTILIZATION OF FEDCONNECT FOR CONTRACT ADMINISTRATION (EPA-H-42-102) (FEB 2014)

EPA will utilize the FedConnect web portal in administering this contract and all task orders. The contractor must be registered in FedConnect and have access to the FedConnect website located at https://www.fedconnect.net/Fedconnect/ .

H.27 TEMPORARY CLOSURE OF EPA FACILITIES (EPA-H-42-103) TAILORED

(a)(1) The Environmental Protection Agency observes the following days as federal holidays. The term "Federal holidays" as used in this clause shall mean only the following enumerated days and any other days hereafter declared National holidays by the President of the United States. Holidays falling on a Sunday will be observed on the following Monday. Holidays falling on a Saturday will be observed on the preceding Friday.

January 1- New Year's Day
January - Third Monday - Martin Luther King Day
February - Third Monday - Washington's Birthday
May - Last Monday - Memorial Day
July 4 - Independence Day
September - First Monday - Labor Day
October - Second Monday - Columbus Day
November 11 - Veterans Day
November - Fourth Thursday - Thanksgiving Day
December 25 - Christmas Day

(2) Holiday observances of such days by Government personnel shall not be cause for additional period of performance or entitlement to compensation except as set forth in the contract. If the Contractor's personnel work on a holiday, no form of holiday or other premium compensation will be reimbursed either as a direct or indirect cost, unless authorized pursuant to an overtime clause elsewhere in the contract.

(b)(1) EPA may close an EPA facility for all or a portion of a business day as a result of:

(i) Granting administrative leave to non-essential EPA employees (e.g., unanticipated holiday);
(ii) Inclement weather;
(iii) Failure of Congress to appropriate operational funds;
(iv) Any other day designated by Federal law, Executive Order or Presidential Proclamation; or
(v) Other reason as determined by the EPA (e.g., designated furlough day for federal workers).

(2) In such cases, Contractor personnel not identified in the contract or task order as excepted (e.g., not performing mission-critical round-the-clock services/tasks) who are not already on duty at the facility shall not report to the facility. Such Contractor personnel already present shall be dismissed and shall leave the facility.

(3) The Contractor agrees to continue to provide sufficient personnel to perform round-the-clock requirements of mission-critical services/tasks already in operation or scheduled for performance during the period in which EPA employees are dismissed, and shall be guided by any specific instructions of the Contracting Officer's Representative (COR). In formulating instructions the COR may consider recommendations from regional/local EPA facilities management/operations staff.
(4) At facilities where EPA shares space and the facility may not close when there is a dismissal of EPA personnel, the Contractor shall seek confirmation from the COR to determine whether or not Contractor personnel should report to the facility. In determining whether or not it is acceptable for Contractor personnel to work at the facility, the COR may consider recommendations from regional/local EPA facilities management/operations staff.

(c) When Contractor personnel services are not required or provided due to closure of an EPA facility as described in paragraph (b), the contract price will be adjusted as follows:
(1) For fixed-price contracts, deductions in the Contractor's price will be computed as appropriate for the particular firm fixed price contract in question, e.g.,
(i) The deduction rate in dollars per day will be equal to the per-month contract price divided by 21 days per month. (In this example, the 21-days-per-month figure was calculated as follows: 365 calendar days/year – 10 Federal holidays – 104 Saturdays/Sundays = 251 days/12 months = 20.92 days/month, rounded up to 21 days/month)
(ii) The deduction rate in dollars per day will be multiplied by the number of days services are not required or provided. If services are provided for portions of days, appropriate adjustment will be made by the Contracting Officer to ensure that the Contractor is compensated for services provided.
(2) For cost-reimbursement, time-and-materials and labor-hour type contracts, EPA shall not reimburse, as direct costs, salaries or wages of Contractor personnel for the period during which such personnel are dismissed from, or do not have access to, the facility.

(d) The Contractor shall place identical requirements, including this paragraph, in all subcontracts that require performance of work on-site unless otherwise instructed by the Contracting Officer.

PART II - CONTRACT CLAUSES

SECTION I – CONTRACT CLAUSES

I.1 CONTRACT CLAUSES INCORPORATED BY REFERENCE

NOTICE: The following contract clauses pertinent to this Section are hereby incorporated by reference:

Definitions (FAR 52.202-1) (Nov 2013)
Gratuities (FAR 52.203-3) (Apr 1984)
Covenant Against Contingent Fees (FAR 52.203-5) (Apr 1984)
Restrictions on Subcontractor Sales to the Government (FAR 52.203-6) (Sep 2006)
Anti-Kickback Procedures (FAR 52.203-7) (Oct 2010)
Cancellation, Rescission, and Recovery of Funds for Illegal or Improper Activity (FAR 52.203-8) (Jan 1997)
Price or Fee Adjustment for Illegal or Improper Activity (FAR 52.203-10) (Jan 1997)
Limitation on Payments to Influence Certain Federal Transactions (FAR 52.203-12) (Oct 2010)
Contractor Code of Business Ethics and Conduct (FAR 52.203-13) (Apr 2010)
Display of Hotline Poster(s) (FAR 52.203-14) (Dec 2007)
Fill in: See EPAAR 1552.203-71
Contractor Employee Whistleblower Rights and Requirement to Inform Employees of Whistleblower Rights (FAR 52.203-17) (Sept 2013)
Printed or copied Double-Sided on Postconsumer Fiber Content Paper (FAR 52.204-4) (May 2011)
Personal Identity Verification of Contractor Personnel (FAR 52.204-9) (Jan 2011)
Reporting Executive Compensation and First-Tier Subcontract Awards (FAR 52.204-10) (Jul 2013)
System for Award Management Maintenance (52.204-13) (Jul 2013)
Service Contract Reporting Requirements for Indefinite-Delivery Contracts (FAR 52.204-15) (JAN 2014)
Protecting the Government's Interest When Subcontracting with Contractors Debarred, Suspended, or Proposed for Debarment (FAR 52.209-6) (Aug 2013)
Updates of Publicly Available Information Regarding Responsibility Matters (FAR 52.209-9) (Jul 2013)
Market Research (FAR 52.210-1) (Apr 2011)
Audit and Records – Negotiation (FAR 52.215-2) (Oct 2010)
Order of Precedence – Uniform Contract Format (FAR 52.215-8) (Oct 1997)
Allowable Cost and Payment (FAR 52.216-7) (Jun 2013)
Fill in (a)(3): 30th day
Option to Extend Services (FAR 52.217-8) (Nov 1999)
Fill in: 30 days
Notice of Price Evaluation Preference for HUBZone Small Business Concerns (FAR 52.219-4) (Jan 2011)

Utilization of Small Business Concerns (FAR 52.219-8) (Jul 2013)
Small Business Subcontracting Plan (FAR 52.219-9) (Jul 2013) Alternate II (Oct 2001)
Liquidated Damages – Subcontracting Plan (FAR 52.219-16) (Jan 1999)
Small Disadvantaged Business Participation Program– Disadvantaged Status and Reporting (FAR 52.219-25) (Jul 2013)
Post-Award Small Business Program Rerepresentation (FAR 52.219-28) (Jul 2013)
Convict Labor (FAR 52.222-3) (Jun 2003)
Prohibition of Segregated Facilities (FAR 52.222-21) (Feb 1999)
Equal Opportunity (FAR 52.222-26) (Mar 2007)
Equal Opportunity for Special Disabled Veterans, Veterans of the Vietnam Era, and Other Eligible Veterans (FAR 52.222-35) (Sep 2010)
Affirmative Action for Workers with Disabilities (FAR 52.222-36) (Oct 2010)
Employment Reports on Special Disabled Veterans, Veterans of the Vietnam Era, and Other Eligible Veterans (FAR 52.222-37) (Sep 2010)
Notification of Employee Rights Under the National Labor Relations Act (FAR 52.222-40) (Dec 2010)
Combatting Trafficking in Persons (FAR 52.222-50) (Feb 2009)
Employment Eligibility Verification (FAR 52.222-54) (Aug 2013)
Drug-Free Workplace (FAR 52.223-6) (May 2001)
Affirmative Procurement of Biobased Products Under Service and Construction Contracts (FAR 52.223-2)(Sept 2013)
Contractor Policy to Ban Text Messaging While Driving (FAR 52.223-18) (Aug 2011)
Restrictions on Certain Foreign Purchases (FAR 52.225-13) (Jun 2008)
Authorization and Consent (FAR 52.227-1) (Dec 2007)
Notice and Assistance Regarding Patent and Copyright Infringement (FAR 52.227-2) (Dec 2007)
Rights in Data—General (FAR 52.227-14) (Dec 2007)
Additional Data Requirements (FAR 52.227-16) (Jun 1987)
Rights in Data—Special Works (FAR 52.227-17) (Dec 2007)
Cost Accounting Standards (FAR 52.230-2) (May 2012)
Disclosure and Consistency of Cost Accounting Practices (FAR 52.230-3) (May 2012)
Administration of Cost Accounting Standards (FAR 52.230-6) (Jun 2010)
Payments (FAR 52.232-1) (Apr 1984)
Payments Under Time-and-Materials and Labor-Hour Contracts (FAR 52.232-7) (Aug 2012)
Discounts for Prompt Payment (FAR 52.232-8) (Feb 2002)
Extras (FAR 52.232-11) (Apr 1984)
Interest (FAR 52.232-17) (Oct 2010)
Assignment of Claims (FAR 52.232-23) (Jan 1986)
Prompt Payment (FAR 52.232-25) (Jul 2013)
Payment by Electronic Funds Transfer –System for Award Management (FAR 52.232-33) (Jul 2013)

Multiple Payment Arrangements (FAR 52.232-37) (May 1999)
Unenforceability of Unauthorized Obligations (FAR 52.232-39) (Jun 2013)
Disputes (FAR 52.233-1) (Jul 2002) Alternate I (Dec 1991)
Protest After Award (FAR 52.233-3) (Aug 1996) Alternate I (Jun 1985)
Applicable Law for Breach of Contract Claim (FAR 52.233-4) (Oct 2004)
Protection of Government Buildings, Equipment, and Vegetation (FAR 52.237-2) (Apr 1984)
Continuity of Services (FAR 52.237-3) (Jan 1991)
Penalties for Unallowable Costs (FAR 52.242-3) (May 2001)
Certification of Final Indirect Costs (FAR 52.242-4) (Jan 1997)
Bankruptcy (FAR 52.242-13) (Jul 1995)
Changes—Fixed-Price (FAR 52.243-1) (Aug 1987) Alternate I (Apr 1984)
Changes—Time-And-Materials or Labor-Hours (FAR 52.243-3) (Sep 2000)
Subcontracts (FAR 52.244-2) (Oct 2010)
Fill in (d): None / Fill in (j): See G.9 Identification of Subcontractors
Subcontracts for Commercial Items (FAR 52.244-6) (Dec 2013)
Government Property (FAR 52.245-1) (Apr 2012)
Use and Charges (FAR 52.245-9) (Apr 2012)
Limitation of Liability–Services (FAR 52.246-25) (Feb 1997)
Value Engineering (FAR 52.248-1) (Oct 2010)
Termination for Convenience of the Government (Services) (Short Form) (FAR 52.249-4) (Apr 1984)
Termination (Cost-Reimbursement) (FAR 52.249-6) (May 2004) Alternate IV (May 2004)
Default (Fixed-Price Supply and Service) (FAR 52.249-8) (Apr 1984)
Excusable Delays (FAR 52.249-14) (Apr 1984)
Computer Generated Forms (FAR 52.253-1) (Jan 1991)

I.2 INDEFINITE QUANTITY (FAR 52.216-22) (OCT 1995)

(a) This is an indefinite-quantity contract for the supplies or services specified, and effective for the period stated, in the Schedule. The quantities of supplies and services specified in the Schedule are estimates only and are not purchased by this contract.

(b) Delivery or performance shall be made only as authorized by orders issued in accordance with the Ordering clause. The Contractor shall furnish to the Government, when and if ordered, the supplies or services specified in the Schedule up to and including the quantity designated in the Schedule as the "maximum." The Government shall order at least the quantity of supplies or services designated in the Schedule as the "minimum."

(c) Except for any limitations on quantities in the Order Limitations clause or in the Schedule, there is no limit on the number of orders that may be issued. The Government may issue orders requiring delivery to multiple destinations or performance at multiple locations.

(d) Any order issued during the effective period of this contract and not completed within that period shall be completed by the Contractor within the time specified in the order. The contract shall govern the Contractor's and Government's rights and obligations with respect to that order

to the same extent as if the order were completed during the contract's effective period; provided, that the Contractor shall not be required to make any deliveries under this contract after 365 days beyond the expiration date of the contract.

I.3 ORDERING (FAR 52.216-18) (OCT 1995)

(a) Any supplies and services to be furnished under this contract shall be ordered by issuance of delivery orders or task orders by the individuals or activities designated in the Schedule. Such orders may be issued from date of award through the last day of the contract period of performance.

(b) All delivery orders or task orders are subject to the terms and conditions of this contract. In the event of conflict between a delivery order or task order and this contract, the contract shall control.

(c) If mailed, a delivery order or task order is considered "issued" when the Government deposits the order in the mail. Orders may be issued orally, by facsimile, or by electronic commerce methods only if authorized in the Schedule.

I.4 ORDER LIMITATIONS (FAR 52.216-19) (OCT 1995)

(a) *Minimum order*. When the Government requires supplies or services covered by this contract in an amount of less than $3,000.00, the Government is not obligated to purchase, nor is the Contractor obligated to furnish, those supplies or services under the contract.

(b) *Maximum order*. The Contractor is not obligated to honor—
(1) Any order for a single item in excess of $9,973,032.77;
(2) Any order for a combination of items in excess of $9,973,032.77; or
(3) A series of orders from the same ordering office within 90 days that together call for quantities exceeding the limitation in paragraph (b)(1) or (2) of this section.

(c) If this is a requirements contract (i.e., includes the Requirements clause at subsection 52.216-21 of the Federal Acquisition Regulation (FAR)), the Government is not required to order a part of any one requirement from the Contractor if that requirement exceeds the maximum-order limitations in paragraph (b) of this section.

(d) Notwithstanding paragraphs (b) and (c) of this section, the Contractor shall honor any order exceeding the maximum order limitations in paragraph (b), unless that order (or orders) is returned to the ordering office within 5 days after issuance, with written notice stating the Contractor's intent not to ship the item (or items) called for and the reasons. Upon receiving this notice, the Government may acquire the supplies or services from another source.

I.5 ORDERING—BY DESIGNATED ORDERING OFFICERS (EPAAR 1552.216-72) (APR 1984) ALTERNATE I (APR 1984) DEVIATION

(a) The Government will order any supplies and services to be furnished under this contract by

issuing task orders on Optional Form 347, or any agency prescribed form, at any time during the contract period of performance. In addition to the Contracting Officer, the following individuals are authorized ordering officers: any EPA Contracting Officer.

(b) A Standard Form 30 will be the method of amending task orders.

I.6 CLAUSES INCORPORATED BY REFERENCE (FAR 52.252-2) (FEB 1998)

This contract incorporates one or more clauses by reference, with the same force and effect as if they were given in full text. Upon request, the Contracting Officer will make their full text available. Also, the full text of a clause may be accessed electronically at this/these address(es):

FAR: https://www.acquisition.gov/far

EPAAR: http://farsite.hill.af.mil/reghtml/regs/other/epaar/1552.htm

I.7 AUTHORIZED DEVIATIONS IN CLAUSES (FAR 52.252-6) (APR 1984)

(a) The use in this solicitation or contract of any Federal Acquisition Regulation (48 CFR Chapter 1) clause with an authorized deviation is indicated by the addition of "(DEVIATION)" after the date of the clause.

(b) The use in this solicitation or contract of any EPAAR (48 CFR Chapter 15) clause with an authorized deviation is indicated by the addition of "(DEVIATION)" after the name of the regulation.

PART III – LIST OF DOCUMENTS, EXHIBITS, AND OTHER ATTACHMENTS

SECTION J – LIST OF ATTACHMENTS

J.1 LIST OF CONTRACT ATTACHMENTS (CO ADDED)

The following attachments are included with this contract:

Attachment 1. Performance Work Statement (PWS)

Attachment 2. Quality Assurance Surveillance Plan (QASP)

Attachment 3. Agency Security Requirements for Contractor Personnel

Attachment 4. Laboratory Space and Access Requirements – Region 2

Attachment 5. Government Furnished Property List

Attachment 6. Labor Category Descriptions

Attachment 7. Reporting Requirements

Attachment 8. Invoice Preparation Instructions

Attachment 9. Instructions for Performing the Annual Allocation of Non-Site-Specific Costs

J.2 CONTRACT ATTACHMENTS INCORPORATED BY REFERENCE (CO ADDED)

The following attachments submitted by the contractor are hereby incorporated by reference into this contract:

Attachment 10. Organizational Conflict of Interest (COI) Plan dated June 2014

Attachment 11. Quality Management Plan (QMP) dated June 2014

Attachment 12. Subcontracting Plan dated June 9, 2014

Attachment 13. Section K – Representations, Certifications, and Other Statements of Offerors dated June 9, 2014

Attachment 1 –
Performance Work Statement (PWS)

PERFORMANCE WORK STATEMENT
TABLE OF CONTENTS

1. SCOPE
2. BACKGROUND
3. TASK DESCRIPTIONS

TASK AREA I – ANALYTICAL SUPPORT
A. Laboratory Sample Analyses
B. Biological Support
C. Field Analytical Support
D. EPA Office of Air (OA) PM2.5 Including Other OA Field and Laboratory Support
E. Field Warehouse Operations Support
F. Laboratory Support Functions
G. Deliverables

TASK AREA II – DATA REVIEW
A. Data Validation
B. Electronic Data Review/Validation
C. Collection and Tabulation of Data
D. Deliverables

TASK AREA III – ANALYTICAL LOGISTICAL SUPPORT

TASK AREA IV – QA/QC SUPPORT
A. Preparation and Review of Biological and Human Health Risk Assessments and Analysis and Review of Ground Water Hydrology Data
B. Preparation and Review of QA Project Plans and Sampling and Analysis Plans
C. Development and/or Review Analytical Methodologies
D. Review, Preparation, and Revision of Other Analytical and QA-Related Documents
E. Additional QA Support
F. Data Validation Review
G. Technical Support to EPA for Laboratory and Field Review
H. Deliverables

TASK AREA V – OTHER TASK-RELATED ACTIVITIES
A. Specialized Technical Training
B. QA and Analytical Training
C. Attendance at Conferences and Meetings
D. Implementation of Team Quality Assurance Program
E. Tracking and Reporting

4. GENERAL REQUIREMENTS
5. ESAT ACRONYMS

PERFORMANCE WORK STATEMENT

1. SCOPE

The Contractor shall provide technical, analytical and quality assurance (QA) support, primarily to the U.S. Environmental Protection Agency (EPA) Superfund Program, other EPA programs, Federal and state agencies, and tribal organizations to facilitate identification, assessment, regulation, and remediation of environmental hazards which may pose a threat to human health or the environment. These requirements necessitate that EPA gather and/or generate information on which to base administrative, regulatory, and/or human health decisions. This contract requires the contractor to perform the following tasks, as assigned:

Task Area I - Analytical Support
Task Area II - Data Review
Task Area III - Analytical Logistical Support
Task Area IV - Quality Assurance/Quality Control (QA/QC) Support
Task Area V - Other Task-Related Activities

In performing this requirement, the Contractor shall be providing technical, analytical, and QA support to the Office of Superfund Remediation and Technology Innovation (OSRTI) and other Agency program offices to assist in meeting the requirements and objectives of the following laws: The Comprehensive Environmental Response, Compensation and Liability Act (CERCLA), 42 U.S.C. §§ 9601 et seq. (1980); The Clean Water Act (CWA), 33 U.S.C. §§ 121 et seq. (1977); The Resource Conservation and Recovery Act (RCRA), 42 U.S.C. §§ 6901 et seq. (1976); The Safe Drinking Water Act , 42 U.S.C. §§ 300f et seq. (1974); the Clean Air Act, 42 U.S.C. §§ 7401 et seq. (1970);and the Toxics Substances Control Act (TSCA), 15 U.S.C. §§ 2601 et seq. (1976); Federal Insecticide, Fungicide and Rodenticide Act (FIFRA), 7 U.S.C. §§ 636 et seq. (1947), (1972) & (1988). This support is also necessary to implement the National Oil and Hazardous Substances Pollution Contingency Plan (the NCP), 40 C.F.R. Part 300 and to provide assistance to Federal Agencies involved in counter-terrorism environmental hazards identification and remediation activities, as required by various Federal Response Plans (FRPs) (see: http://www.dhs.gov/files/programs/editorial_0566.shtm).

The Contracting Officer (CO) will issue Task Orders (TOs) for all work required under this contract in accordance with the terms and conditions of the contract. The Contractor shall submit all work products for review and approval by appropriate government personnel prior to preparation and issuance in final, in accordance with the terms and conditions of the contract.

2. BACKGROUND

The Superfund Program has historically relied on the EPA Contract Laboratory Program (CLP) to perform the majority of routine analytical services (RAS), and the Regional EPA Laboratories including the Environmental Services Assistance Team (ESAT) to provide other analytical services in support of Agency hazardous waste site projects, and other environmental monitoring.

Because of the need for both routine and specialized non-routine analytical services, and the emphasis on environmental data quality assurance under a mandatory EPA Quality System, the government is seeking to fully optimize the use of available resources within Regional Laboratory facilities. An ESAT may be utilized in each region to perform sample analyses, analytical and field support services, QA support, data review and validation, technical information and electronic data transfers, and other support functions for the EPA.

In addition, OSRTI seeks to use the Triad dynamic work strategy approach (http://www.triadcentral.org) for design and implementation of sampling programs intended to support Superfund site decisions. ESAT may be utilized in systematic planning or review of dynamic sampling strategies; use of rapid sampling and real-time measurement technologies; rapid interpretation of results generated by the use of these tools; and/or, perform data quality assurance and management activities.

3. TASK DESCRIPTIONS

This section describes the primary task areas within the contract Performance Work Statement (PWS). The Government may order work by the team within any of these task areas at any time during the contract performance period with completion required as specified in task orders (TOs) placed under this contract, and as specified in written Technical Direction (TD) in accordance with the Technical Direction clause of this contract.

The Contractor shall provide analytical chemistry, biological, and field sampling and analytical support to EPA at the Agency's regional laboratory facilities and at specified field locations using one or more EPA furnished mobile laboratories and/or field instrumentation.

The Contractor shall accomplish all tasks in strict accordance with the requirements specified in TOs issued by the CO. TOs may specify or reference Standard Operating Procedures (SOPs) or analytical methodologies for accomplishing the work required by the TOs, as well as QA/QC, document control, chain-of-custody, and deliverables requirements. Also, EPA may issue TD in accordance with the contract clause requirements for clarification of specific procedures or methodologies that shall be performed by the Contractor to accomplish any work authorized by TOs.

The Contractor shall comply with environmental management system (EMS), health and safety, environmental compliance, waste handling, and other applicable rules and regulations, established by EPA regional laboratories and other regulatory agencies while performing under this contract.

EPA will make available to the Contractor all applicable SOPs, analytical methods, QA/QC documents, and laboratory work rules, either in hard copy or electronic format. It is the Contractor's responsibility to become familiar with all of these documents prior to performing any work under this contract.

TASK AREA I: ANALYTICAL SUPPORT

The Contractor shall provide chemical, biological, field sampling and analytical support to EPA at the Agency's Regional laboratory facilities and at specified field locations using mobile laboratory (ies) and/or field-based analytical methods.

EPA will provide facilities, equipment, and analytical supplies to the Contractor to perform Task Area I activities at EPA's laboratory facilities. It is the Contractor's responsibility to immediately notify the appropriate EPA Task Order Contracting Officer's Representative (TOCOR) or Task Monitor (TM) when it encounters any equipment failures that cannot be readily remedied by the Contractor (as authorized by the TOs) or technical problems that may impact the quality or on-time delivery of deliverables, or if any required equipment or supplies are unavailable to accomplish the required work.

Samples analyzed and/or collected may include sample matrices such as solids, dust, particulates, ash, gases, wipes, water, waste water, liquids, soil, tissue, vegetation, sediments, air, wastes, Dense Non-Aqueous Phase Liquids (DNAPL), Non-Aqueous Phase Liquids (NAPL), leachates, and biota. Samples may be from known or suspected hazardous waste sites, spill events, and/or terrorism events and may potentially contain hazardous/extremely hazardous materials at high concentrations. The Contractor shall be aware of the potential hazards associated with the handling and analyses of such samples.

A. Laboratory Sample Analyses

The Contractor shall analyze environmental samples consisting of a wide variety of media for organic and inorganic chemical contaminants including, but not limited to, pesticides/PCBs, volatiles, and semi-volatile organic compounds; cyanide, metals, nutrients, and other inorganic analytes; air contaminants; biota; toxins and dilute chemical warfare agents and any other materials which may be found in environmentally-degraded locations and/or which may be utilized in terrorist activities against the general public. Sample analyses shall include screening, qualitative and/or quantitative analysis, as well as sample preparation, extraction, digestion, distillation, measurement, data reduction and reporting, as applicable.

The Contractor shall:

Analyze environmental samples for organic chemical compounds employing gas chromatography (GC), gas chromatography/mass spectrometry (GC/MS), gas chromatography/high resolution mass spectrometry (GC/HRMS), high pressure liquid chromatography (HPLC), liquid chromatography/mass spectrometry/mass spectrometry (LC/MS/MS), and other techniques. This may include the performance of quantitative and qualitative analysis of tetra- through octachloro-dibenzodioxins and dibenzofurans, and PCB congeners employing selected ion monitoring (SIM) GC/MS, and other techniques which may include Time-of-Flight (TOF) GC/MS;

Analyze environmental samples for inorganic chemical elements/compounds employing inductively coupled plasma-atomic emission spectroscopy (ICP/AES) and inductively coupled

plasma-mass spectrometry (ICP/MS); flame atomic absorption (AA), graphite furnace (GFAA), and cold vapor AA spectroscopy, ion chromatography, auto analyzers, radiochemistry and other wet or physical/chemical and instrumental techniques;

Repeat any organic/inorganic tests that do not meet the designated test acceptability requirements set forth in the established, approved, or regulated methodologies and for SOPs. If any modifications to the SOPs and/or analytical methodologies are required, the Contractor shall submit the proposed written revisions of the SOPs and/or analytical methodologies to the Contracting Officer's Representative (COR), TOCOR, or TM for approval prior to implementing;

Create and maintain log books, laboratory notebooks and worksheets in accordance with good laboratory practices and Regional policies, and complete all documents and records as required by the analytical methods and SOPs as described in the TOs. The Contractor shall archive samples, extracts and data in accordance with regional SOPs, various regulated, approved, and/or established methods (e.g., EPA, ASTM), and policies as directed in individual TOs. All electronic data shall be generated and archived in accordance with the protocols outlined by the Agency and Region, as well as any future revisions;

Comply with all Quality Assurance/Quality Control (QA/QC) requirements (which may include but not be limited to, analyst satisfactorily completing the required initial & continuing demonstration of capability for a given parameter; documentation of analytical corrective actions, batch level quality control and recordkeeping, etc.) as described in Agency and/or Regional policy, SOPs, TD, and other QA/QC documents provided by EPA;

Manage and track the progress of completion of each analytical project in accordance with Regional SOPs and directions contained in the TOs;

Analyze Performance Evaluation (PE) (including NELAC and/or other PE certification samples) and other QA-related samples; evaluate instrumentation, scientific software, and methodologies; prepare analytical standards; review, prepare or revise analytical procedures and SOPs; and

Analyze Performance Evaluation (PE) and or proficiency testing (PT) samples (including NELAC, TNI, ISO and/or other PE or PT certification samples) and other QA-related samples; evaluate instrumentation, scientific software, and methodologies; prepare analytical standards; review, prepare or revise analytical procedures and SOPs;

Perform routine maintenance and daily calibration of laboratory instruments;

Sample analysis may also include microscopic detection of Asbestos fibers as required by the analytical methods and SOPs described in the TOs.

B. Biological Support

The Contractor shall perform biological testing on hazardous waste, water, soil, sediments, tissue, vegetation and other media, employing aquatic and sediment toxicity, bioaccumulation,

seed germination, microbial, viral and other biological tests. The Contractor shall also conduct biological sampling and perform biological assessments, e.g., biodiversity studies, bioaccumulation studies, immunoassays and gene expression studies, toxic algae surveys, sediment oxygen demand studies, biological toxicity testing, specimen preparation and examinations, biological and ecological risk assessments, bacterial and viral assessments and Microtox testing. Biological assessments may be performed at fixed or mobile facilities.

Accordingly, the Contractor shall:

Collect the media and/or organisms for examination, processing and/or testing. This may require electro fishing for the collection of fish and other techniques for the collection of specimens in support of ecological risk assessments; Sample collection may require some dive support, in which the Contractor shall meet EPA dive requirements;

Develop and implement a site work plan detailing required field activities, including sample collection and testing, test organism identification and examination, sample preparation and packaging, chain-of-custody requirements, and decontamination procedures;

Evaluate chemical parameters such as basic water quality measurements and chemical concentrations in various media, total organic carbon, acid volatile sulfides/simultaneously extracted metals, and grain size to better assess results of the toxicity tests and potential for ecological risk. The data required to be evaluated may be derived from samples obtained in sampling performed under this task or that are split for chemical analysis;

Perform activities necessary for the collection, culturing and maintenance of biological test organisms to assure an adequate, viable supply of the organisms for biological/microbiological/viral testing at the EPA Regional laboratories. The Contractor shall obtain new test organisms in order to maintain existing laboratory cultures;
Perform culturing activities in accordance with established, approved, and/or regulated methodologies and/or laboratory SOPs specified in TOs;

Prepare forms and maintain a laboratory log book or other specified documentation for recordings including QA/QC documentation required by the SOPs and/or analytical methodologies which may be in electronic format;

Perform routine maintenance and daily calibration of laboratory instruments;

Perform acute and chronic reference toxicity tests to assure quality test organisms for site specific toxicity testing; and

Repeat any biological tests that do not meet the designated test acceptability requirements set forth in the established, approved, or regulated methodologies and for SOPs. If any modifications to the SOPs and/or analytical methodologies are required, the Contractor shall submit the proposed written revisions of the SOPs and/or analytical methodologies to the Contracting Officer's Representative (COR), TOCOR, or TM for approval prior to implementing.

The Contractor shall also utilize techniques such as Polymerase Chain Reaction (PCR) instrumentation and other emerging and conventional technologies for the detection, identification, and characterization of microbes in various media. This may require the development and evaluation of protocols and SOPs for the utilization of such instrumentation and technologies including the technical evaluation and assessment of resulting data.

C. Field Analytical Support

The Contractor shall provide staff to maintain and/or operate one or more mobile analytical laboratories meeting stated government specifications for designated Regions. The mobile laboratories are detailed to sites throughout each specific Region, as assigned by TD, to provide Field Analytical Support Program (FASP) activities and/or field support for programs providing resources. FASP analyses usually require quick or rapid-turn-around, may be performed at designated on-site field locations in the mobile laboratory using stationary analytical instrumentation, or using portable; and/or, hand-held chemical or physical testing instruments; and/or at the Regional laboratory.

The Contractor shall perform field chemical and physical analyses using portable instruments and test kits, such as immunoassay test kits, X-ray fluorescence, GC/PID, ion probes; in situ, analytical and sampling approaches (e.g., Membrane Interface Probe, Laser Induced Fluorescence, and Direct Sampling Ion Trap Mass spectrometer); and mobile (transportable) instruments (e.g. GCs, GC/MS, ICP/AES, AA, GFAA, Mercury analyzers, and other electro metric instrumentation).

The Contractor shall design and implement analytical plans that must meet the data quality objectives (DQOs) for the decision needs of a specific field analytical project. The Contractor may be required to provide written recommendations for implementation of the analytical plans designed. The Contractor may be required to perform analytical activities, such as sample preparation, extraction/digestion, clean-up, instrument data acquisition, data verification, electronic data transfers, QC evaluation, and reporting. Information about field analytical and sampling technologies may be found at http://fate.cluin.org.

The Contractor shall:

Participate in up-front planning meetings to help the project team develop data collection strategies and dynamic sampling plans that identify and utilize the best sampling and analytical tools and approaches to meet site-specific decision needs and criteria. These criteria include both technical, instrument-related criteria, as well as practical considerations such as time constraints, project budgets, and acceptable levels of uncertainty (both sampling and analytical);

Perform Demonstrations of Methods Applicability (DMAs) or pilot testing which may be necessary to establish project specific decision levels (see: http://www.triadcentral.org/gloss/dsp_glossterm.cfm?glossid=154);

Collect samples and perform other ancillary tasks (e.g., sample preparation, packaging, shipment, and transport and documentation preparation) where ESAT is providing support under

this or other task areas. The Contractor may be required to operate specialized field equipment, (e.g., the Geoprobe; EPA-owned drill rigs, boats, and Global Positioning Systems (GPS); air sampling, monitoring and analysis equipment; and purging pumps used at monitoring wells);

Mobilize and demobilize equipment for field use, drive the mobile laboratory to and from field sites, set up and obtain utilities and supplies for vehicles, perform routine maintenance and emergency repair of equipment, and general upkeep of all assigned equipment and vehicles. In addition, the Contractor shall perform equipment decontamination and glassware cleaning and preparation necessary for the field operation;

Develop and implement a site work plan detailing required field activities, including sample collection and analysis, sample preparation and packaging, chain-of-custody requirements, decontamination procedures and all required documentation;

Perform sample analyses to include screening of samples in the field, field and laboratory qualitative and/or quantitative analysis, as well as sample preparation, extraction, digestion, distillation, measurement, data reduction and reporting, as applicable; and

Provide field sampling support which includes:

1. QA/QC sampling and studies at all sites including Superfund sites; and/or other programs' sites/locations, where EPA is authorized to perform field activities; and/or

2. Sampling associated with field analyses; and/or

3. Sampling and field analysis as described in this section; and/or

4. Sampling associated with biological testing and assessment support specified above.

D. EPA Office of Air Quality Planning & Standards (OAQPS) Field and Laboratory Support (Program Buy-in)

The Contractor shall provide field support services to EPA Regions to conduct performance evaluations on established ambient air field instruments used to monitor the following: particulates with an aerometric diameter of 2.5 microns or less (PM2.5); particulates with an aerometric diameter between 2.5 and 10 microns (PM10-2.5); criteria pollutant gases such as ozone, carbon monoxide, sulfur dioxide, and oxides of nitrogen; and lead (Pb). The Contractor may also conduct audits of the PM2.5 Chemical Speciation Network (CSN) and the Interagency Monitoring of Protected Visual Environments (IMPROVE) network. The performance evaluations will require the use of mobile laboratories, samplers and audit instruments. All performance evaluations and audits shall be scheduled and performed according to 40 CFR Part 58 and the SOPs developed for each audit program including:

PM2.5 Performance Evaluation Program (PEP) Standard Operation Procedures (SOPs) for Field Activities (see: http://www.epa.gov/ttnamti1/pmpep.html);

Lead (Pb) Performance Evaluation Program Standard Operating Procedure
(see: http://www.epa.gov/ttnamti1/pbpep.html);

SOP for Through-the-Probe Performance Evaluations of Ambient Air Quality Monitoring of Criteria Air Pollutants
(see: http://www.epa.gov/ttnamti1/files/ambient/npapsop/npapttpsop.pdf);

Chemical Speciation Program
(see: http://www.epa.gov/ttn/amtic/specguid.html);

IMPROVE
(see: http://vista.cira.colostate.edu/improve/);

Laboratory support for gravimetric analysis of PM2.5 and PM10-2.5 filters will be provided under the Region 4 ESAT contract, at the EPA Region 4 Laboratory (see: http://www.epa.gov/ttn/amtic/files/ambient/pm25/qa/peplsop.pdf). The Region 4 Contractor shall be responsible for shipping unexposed PM2.5 and PM10-2.5 air sampling filters to the designated Regional field scientists who shall collect integrated ambient air samples as part of the performance evaluation program. In addition to air filter preparation, the Contractor shall perform the following according to the laboratory SOP: receive handle, and process the exposed filters; gravimetrically analyze the exposed filters; record data and other relevant information; required QA/QC; validate audit data; and coordinate the upload of audit data to the EPA Air Quality System (AQS) with OAQPS; and

Chemical analyses of filters for concentrations of lead (Pb) will be provided under the Region 9 ESAT contract, at the EPA Region 9 Laboratory;

As specified by the Regional TOs, the Contractor may be responsible for providing a vehicle to support the audit program(s). Specific requirements for the vehicle may include: storage capacity, ground and height clearance, trailer hitch and appropriate safety equipment. The Contractor may be subject to follow current and future revisions of the Department of Transportation (DOT) "hours of service" (HOS) regulations for drivers covered under the DOT regulations for "property carrying drivers" as applicable (see: http://www.fmcsa.dot.gov/rules-regulations/topics/hos/index.htm). If a mobile laboratory unit provided by the Government does not require towing, this will be described in the property list of "shared" or "government furnished property" listing as a mobile laboratory and not a trailer.

Other support functions include logistics, communication, data reporting, equipment maintenance and repair; health & safety; and, environmental compliance activities as outlined in the TOs.

The Contractor shall perform additional site or project-specific work, e. g., gathering site information (i.e., precise location, weather conditions, description of surroundings), performing other field collection and/or analyses activities (e. g., temperature, wind velocity/direction, and other ambient air sample collection and testing) as described in the TOs and in accordance with the SOPs.

EPA will provide the training and certification required for the scientist(s) performing the field audits and for the laboratory analysts, the mobile laboratories or transportable air samplers, audit instrumentation, and sample filters.

E. Field Warehouse Operations Support

The Contractor shall perform the following activities required for the operation of the field warehouse, as directed:

Receive and log requests for field equipment. Requests will be provided by designated EPA personnel, Contractors, and other official users. Prepare equipment request forms; acquire EPA approval to release the equipment; define operational conflicts; supply all necessary paper work and operating instructions; and prepare equipment for pick-up, shipment, or delivery. Clean and return ice chests to the appropriate locations or originators. Keep the equipment storage room and field warehouse area neat and orderly in accordance with appropriate approved SOPs. Inform the TOCOR, and/or, TM, and/or COR when expendable supplies have reached the minimum stock levels defined by the TOs and require replacement;

Receive and log-in returned equipment. Evaluate returned items for cleanliness and operational defects. Clean and restock the returned items in accordance with SOPs;

Maintain/update field equipment usage and readiness records. Equipment usage and status shall be tracked by completing calibration records, log books, equipment check-out forms, and updating databases at a minimum;

Maintain an Equipment Readiness Schedule which would require periodic calibration and other checks to assure that field equipment is kept in a "ready state" for use. Where equipment is found to be nonfunctional, the Contractor shall appropriately label the equipment and notify the TOCOR, TM, and/or COR. The Contractor shall prepare any equipment in need of repair for shipment;

Prepare SOPs for completing equipment readiness and calibration procedures for use by ESAT personnel as approved by EPA;

Maintain and update SOPs for each unit or type of equipment; and

Maintain manuals, instructions, and other documents in support of field equipment. This shall include assuring that all applicable supporting documentation is available for the field equipment.

F. Laboratory Support Functions

The Contractor shall perform the following laboratory support functions:

Routine analytical laboratory instrumentation and/or equipment (including associated computers) set up, preparation, testing, and maintenance activities. This shall also include performing routine maintenance tasks required for proper operation of analytical equipment as described in the instrument operational manual. Instrumentation may include, GCs, GC/MS, HRGC/HRMS, LC/MS/MS, HPLC, ICP/AES, ICP/MS, GFAA, AA flame, IC, auto-analyzers, pH meters, balances, filtration apparatus, distillation equipment, continuous liquid-liquid extractors, or any other instrumentation assigned to ESAT to perform analysis on a routine basis. Such instrumentation shall be identified on a Regional basis;

Set up and maintenance activities necessary to perform the analysis of assigned samples;

Laboratory glassware washing in accordance with rigid, Regional QA/QC requirements specified in TOs and referenced SOPs. The Contractor shall complete all washing, drying and preparation activities and place clean glassware in the designated storage areas within time frames that assure an adequate inventory of clean glassware. Glassware cleaning, washing, and soaking procedures may require the handling and/or use of concentrated and/or diluted acids (e.g., hydrochloric acid, sulfuric acid) or bases (e.g., sodium hydroxide, hydrogen peroxide). The use and operation of commercial dishwashers and hot-air ovens may be required;

General cleanup activities including bench tops; instrument tops; and fume hood cleaning to assure that all glassware washing areas, and other areas where the Contractor performs work, are maintained in a clean and orderly manner;

Sample custodial duties, such as:

1. Accept and log in environmental samples arriving at the Regional Laboratory.
2. Enter sample information into an electronic and hardcopy Laboratory Information Management System (LIMS) and generate sample tracking sheets for distribution to analyst in accordance with TOs instructions and SOPs.
3. For each analytical batch analyzed, consolidate electronic and hardcopy analytical data into a single electronic and/or hardcopy file and distribute, as directed by TOs.
4. Maintain, update, and track analytical batches scheduled for analyses.

Perform support activities relating to the disposal of environmental samples in accordance with the sample disposition and disposal SOPs. These activities include the storage of analyzed samples in the appropriate refrigerators, tracking of samples due for disposal, obtaining the reports/results of the analyses for the samples to be disposed, review results to determine type of waste and the appropriate mechanism for disposal, physical transfer of used samples and waste generated by the preparation and analyses of samples to the appropriate containers, completing the information on the sample disposal sheets after sign-off, and notification to the designated EPA personnel that samples are ready for disposal;

File reports and project folders received from laboratory chemists in the location designated by the TOCOR, TM and/or COR. The Contractor shall archive project folders and retrieve files, as necessary; and

Develop and maintain analytical methods and procedures, including laboratory SOPs and/or analytical methodologies. The Contractor may be required to develop SOPs for new analytical methods, analytes, or matrices, as well as review, evaluate, and revise existing SOPs and/or analytical protocols/procedures.

The Contractor shall also perform the following technical support tasks:

1. Test and evaluate instrumentation, related software, and analytical procedures and methodologies. The Contractor shall verify acceptable performance of analytical methods and instrumentation and the adequacy of QA/QC procedures;
2. In a case where existing Government-approved test methods cannot be employed in the analysis of a sample, the Contractor shall prepare a testing plan for the approval by the Government. In performing the analysis, the Contractor shall not deviate from the approved plan without the express consent of the Government. Following the successful completion of the non-routine analysis, the Contractor shall deliver a report describing the actual processes used. The report shall discuss the viability of these procedures for performing similar analyses in the future and provide alternative procedures that might be employed taking into account such factors as timeliness, cost, and effectiveness;
3. Perform safety-related laboratory support tasks, such as checking of bench hood air flow, laboratory eye washes, safety showers and other safety equipment and requirements in accordance with federal, state, and local health and safety requirements, and regulations.
4. Perform environmental compliance and pollution prevention tasks in accordance with Federal, state, and local requirements or regulations (e.g., chemical inventory, solvent recycling, collection and preparation of laboratory generated waste for disposal).

G. Deliverables

The Contractor shall submit the data obtained in performing the activities under this task area; reports necessary to present the data; and other required documents and reports, applicable to each of the specific TOs. The deliverables shall be submitted in the format and time frames specified in the TOs, TD, or referenced SOPs for the specific activity.

Deliverables for sample analytical tasks shall include a complete data package with appropriate electronic files which includes any or all analytical and QC documentation as defined by the TOs; and/or, SOPs; and/or, analytical methodologies. The Contractor shall make any required changes and resubmit the data package in accordance with the TOs/TD. This may require the provision of data into relational databases to facilitate further interpretation and use of the data.

Deliverables for other laboratory support functions shall include a report of results with supporting data; draft SOPs and/or analytical methodologies, and/or completed data forms and logs, as applicable to the specific tasks and as detailed in the TOs.

Deliverables for field analytical support and field biological support shall include a site work plan or other documentation of readiness, submitted prior to the initiation of any field activities, as required in the TOs. Upon completion, the Contractor shall submit a complete data package which includes any or all analytical and QC documentation, including related forms; a site

report, detailing the work performed; field notes; and other necessary documentation, in accordance with the TOs and referenced SOPs and/or analytical methodologies.

Deliverables for laboratory biological activities shall include a complete report of results with supporting data, in accordance with TOs, referenced methods, and referenced SOPs and/or analytical methodologies.

TASK AREA II: DATA REVIEW

The Contractor shall perform technical review of organic, inorganic, biological, dioxin, hazardous materials, explosives and other analytical data to assess data quality and completeness. Data for review and/or validation may be provided in electronic format; and/or, transferred via web-based internet electronic data format, hard copy data packages and/or, via other future media.

A. Data Validation

The Contractor shall perform data review/validation activities on data from the following sources: CLP, Regional laboratory contracts, EPA Regional Laboratory, potentially responsible parties (PRPs), EPA field Contractors, and other sources. This shall include data review for the regional data validation oversight program. The Contractor shall not conduct data validation of its own data generated under this contract or from any other of the Contractor's own analytical laboratories or subsidiaries.

The Contractor shall provide a QA data review of data packages and electronic deliverables (e.g., CD-ROM, Data Assessment Tools (DAT), Staged Electronic Data Deliverable (SEDD) (see: http://www.epa.gov/superfund/programs/clp/sedd.htm), internet web-based, or other electronic format) using the following documents and requirements:

CLP, Regional data review SOPs, and National and Regional Data Validation Functional Guidelines/Guidance (e.g. may include dioxins and explosives) and directives;

CLP Routine Analytical Services (RAS) and Modified Analyses contract protocols and performance requirements;

A graded approach or streamlined data validation protocols provided by the Agency;

Individual Regional laboratory contracts protocols and performance requirements;

Regional sampling/project plans;

Regional Performance Evaluation (PE) program guidance; and

Task Order requirements.

The Contractor shall examine the package to determine if required data and documentation are present. If information is missing, the Contractor shall immediately notify the TOCOR, TM and/or COR, through an interim deliverable listing the information required to complete the data validation.

B. Electronic and Manual Data Review/Validation

The Contractor shall perform electronic validation of electronic deliverables (e.g., diskettes, CD ROM, DAT, SEDD, internet, or other electronic media) or manual validation of hard-copy data packages using/resulting from electronic validation assessment software provided by the EPA, in accordance with the Regional SOPs, TOs and/or software documentation. The Contractor shall follow national and regional procedures, as well as the procedures described in the software program and SOPs to validate data electronically on organic/inorganic data packages designated for electronic assessment/validation.

Upon completion of an electronic or manual validation, the Contractor shall submit the required data validation report (electronic and/or hard copy) to the TOCOR, TM, or COR within the time frames specified in TOs and/or TD. When revisions or corrections are required, data validation reports will be returned to the Contractor with written directions indicating the necessary revisions/corrections in accordance with TD. The Contractor shall make the necessary revisions/corrections and re-submit the data validation report to the TOCOR, TM or COR. The Contractor shall implement an electronic data validation tracking system if required under the TOs. The Contractor shall transfer electronic data as specified in the TOs and/or TD.

C. Collection and Tabulation of Data

The Contractor shall produce reports summarizing statistical information concerning data reviews. Typical statistical information covered by such reports shall include numbers of samples for which data were rejected or estimated and numbers of rejections/estimations by fraction (e.g., volatiles, semi-volatiles, Pesticide/PCBs, dioxins, metals, cyanide, or other parameters). The Contractor shall statistically quantify the reasons for qualification or rejection of data. Typical factors to qualify the data may include: surrogates, holding times, calibration, contamination, identification, internal standards, temperature/preservation, % moisture, volatile head space, matrix spike recovery, and duplicates audit. Contractor shall enter data into and manage automated data storage (databases) which store and analyze data. Contractor shall use systems as directed by EPA such as SCRIBE. Response Manager or other applications as directed by EPA in specific task orders. Contractor may be required to obtain third party hosting for data storage databases or supporting systems. Contractor may be tasked to automate data management tasks with software such as Microsoft Visual Basic, Microsoft Access, PERL, complex Structured Query Language (SQL) queries, etc. Contractor may be tasked to provide administration support for database servers and applications.

D. Deliverables

For all data review tasks, the Contractor shall prepare and submit to the TOCOR, TM or COR a report, detailing results of the data review. When revisions or corrections are required, the

TOCOR, TM or COR will return the report and data package to the Contractor with written instructions through TD, indicating the necessary revisions/corrections. The Contractor shall make the necessary revisions/corrections and re-submit the report and data package to the TOCOR, TM or COR.

TASK AREA III: ANALYTICAL LOGISTICAL SUPPORT

The Contractor shall provide analytical logistical support to field, analytical, quality assurance, and Regional Sample Control Center (RSCC) activities as specified in TOs. The Contractor shall:

Exchange information based on EPA written procedures, with CLP and Non-CLP users;

Coordinate/facilitate tracking the flow of CLP and other analytical data/documents;

Manage, track, and maintain sample and QA-related data, chain-of-custody documentation, sample log-in data, and task-related documents;

Receive and track various sample analyses projections;

Inventory the Complete Sample Delivery Group File (CSF), and does not include contacting contract laboratories;

Maintain databases (input/output) related to analytical logistics, such as the EPA non-CLP analytical tracking database and the individual Regional LIMS;

Track, package, and ship samples; return coolers;

Track requests and analytical information on RAS performed by CLP and other external analytical sources;

Receive and enter Regional Laboratory information into a Regional database system (e.g., LIMS) to support sample scheduling and tracking of internal analytical requests, laboratory assignments, sample shipments, and data review logistics;

Notify field Contractors of laboratory assignments;

Generate and/or distribute chain-of-custody, traffic report forms, electronic field sheets and sample tags. This may include using EPA-developed sample tracking software (e.g., FORMS II Lite™, Scribe, etc.), and any other future tracking software including revisions;

Distribute data packages to data validators;

Acquire and track status of samples from receipt of request, sample analysis, data validation and archiving of data. Track status of data packages to include due dates, lateness, and data validation reports, missing sample data, PE samples and field QC samples;

Archive/retrieve analytical and QA-related data. Prepare data packages, reports, and other documents for storage in accordance with EPA requirements and SOPs at EPA facilities which may include EPA-acquired off-site facilities. Physically lift, move, and transport boxes of data and/or reports to EPA off-site facilities for data storage/archiving purposes as needed. Prepare boxes for archiving in accordance with Regional SOPs; and/or requirements for archiving to the Federal Records Center (FRC); and

Receive and track data, documents, and responses from Regional CLP and non-CLP laboratories. Distribute Regional CLP and non-CLP laboratory data and related documents, electronically when possible.

The geospatial support will include data development and management, spatial analysis, web service and application development, and cartographic support using commercially available and Agency standard Geographic Information System (GIS) software, including all modules of ESRI's ArcGIS. Additional software to be used may include ERDAS Imagine, ESRI's Spatial Data Engine, and ArcGIS Server. The Contractor shall provide spatial and non-spatial data handling, image processing, and data analysis support using data and information from a wide range of disciplines (including but not limited to chemistry, hydrology, toxicology, biology, geography, and geology) and from a wide range of sources (laboratory, other agencies, commercial vendors). All work products shall conform to EPA regional and national standards for cartographic content and presentation.

Deliverables and Schedule

The Contractor shall prepare and submit reports associated with the above list of tasks as per appropriate Regional TO/SOPs. These reports shall include the following:

Weekly reports (or per the frequency specified in the TO) indicating data packages processed and status; and

Non-CLP tracking reports (i.e. ANSETS or any other Agency specified tracking system).

TASK AREA IV: QA/QC SUPPORT

A. Preparation and Review of Biological and Human Health Risk Assessments and Analysis and Review of Ground Water Hydrology Data

The Contractor shall prepare and/or review biological and human health data and assessments, including ecological risk assessments, biodiversity assessments, human health risk assessments, and endangered species assessments. The Contractor shall research and review applicable regulations, guidance documents, data calculations, species-specific reference toxicity values, literature, and database references, as well as statistical analysis of data. The Contractor shall prepare ground water hydrology assessments, and review of analyses by other parties. Review may include evaluation of ground water and contaminant transportation, and application or review of models to predict the fate and transport of ground water contaminants. Groundwater

hydrology evaluations may require evaluation of surface water interactions with ground water and the effects of implementation of clean up technologies on ground water contamination. Site visits and meetings may be required to obtain the necessary information to complete the required review or assessment.

B. Preparation and Review of QA Project Plans and Sampling and Analysis Plans

The Contractor shall review QA project and/or sampling and analysis and other work plans, and related documents, and provide technical comments to EPA. The Contractor shall prepare QA project and/or sampling and analysis plans for EPA, other governmental, and ESAT-conducted projects only, but not for another Contractor's projects. This may require participation in up-front planning activities that precede the mobilization to the field and collection of initial samples. The up-front support may include initial and continued development of certain models, problem statements, decision goals, and the identification of sampling variables relevant to project decisions.

The Contractor shall select alternate study designs, develop hypothesis testing and uncertainty analysis, and perform data assessment from both a graphical and statistical standpoint. The statistical support shall include various techniques such as geostatistics, kriging and the design and analysis of spatial and temporal sampling, and modeling development from multivariants. The support must be consistent with the EPA Quality System from a data collection standpoint as referenced in the following documents: EPA QA/R-5: EPA Requirements for Quality Assurance Project Plans; EPA QA/G-9: Guidance for the Data Quality Assessment: Practical Methods for Data Analysis; and EPA QA/G-4HW: Guidance for the Data Quality Objectives Process for Hazardous Waste Sites; and any other specific Regional Quality Assurance documents. This includes any and all future revisions to the documents described above (see: http://www.epa.gov/quality/qa_docs.html).

C. Development and/or Review Analytical Methodologies

The Contractor shall provide technical support in the development and/or review of analytical methodologies, SOPs, and protocols, including technical specifications for new or non-CLP methods, and related QA activities. This shall require that the Contractor perform research on specified topics, including search of literature in pertinent technical journals and publications, obtain information from the scientific communities, and access and download information from the Internet. The Contractor shall provide a report of its research, addressing all specified issues and presenting comments regarding the applicable analytical methods.

D. Review, Preparation, and Revision of Other Analytical and QA-Related Documents

The Contractor shall provide technical support to EPA in the review, development, and/or revision of QA-related documents as specified in TOs. These documents may include SOPs, procedural documents, scopes of work, operating guidelines, analytical summaries and tables, functional guidelines, and data validation manuals. The Contractor shall conduct scientific and technical review on EPA SOPs, manuscripts, data compilations, review articles, technical papers prepared for journal publication, and scientific/technical products.

E. Additional QA Support

The Contractor shall provide the following other QA-related support:

Preparation, tracking, and shipping of QC audit samples;

Evaluation of specialized computer systems to be utilized to perform or support task-related activities, such as loading existing analytical data into EPA-supplied software and generating reports or conducting electronic data assessments/validation;

Development and assessment of specialized sampling procedures at hazardous waste sites, e.g., in cases where established procedures are inadequate for the prescribed/indicated analytical protocol; and/or,

Review and assessment of field analytical and fixed laboratory conformational data and split sampling data for determining data comparability.

F. Data Validation Review

The Contractor shall perform data review for the Regional data validation oversight program. The TOCOR, TM, or COR will assign cases for review and specify the scope of review through TD. The Contractor shall review the information in accordance with the SOPs and guidance defined in the TOs to determine if the data validation report and accompanying documents are in accordance with the appropriate SOPs and guidance.

G. Technical Support to EPA for Laboratory/Field Review

The Contractor shall provide technical support to the EPA in the review of CLP, non-CLP, PRP, and State laboratory performance in the analysis of samples for EPA environmental programs and in the review of PRP, State, and field Contractor performance of field sampling/analytical activities. This technical support may require the Contractor to review and track applicable documents and electronic media to determine if laboratory and/or field activities have been performed in accordance with EPA-approved requirements and specifications. The Contractor may be required to provide on-site technical support to EPA at designated laboratories or sites, if approved in advance by the CO.

H. Deliverables

The Contractor shall submit to the applicable TOCOR, TM, or COR documents prepared and a complete report of its review of documents and data performed under this task area (Task Area IV QA/QC Support), in the format specified. This may require the submission of electronic deliverables, data tables, notes of meetings and site visits, and research materials and/or references. The Contractor may be required to summarize document revisions. At times, multiple copies of documents/deliverables may be required. The Contractor shall revise and resubmit documents in accordance with EPA requirements specified in TD. The Contractor

shall comply with the requirements of the clause, SPECIAL REPORTING REQUIREMENT: REGULATORY ASSISTANCE, when preparing deliverables for this task.

TASK AREA V: OTHER TASK-RELATED ACTIVITIES

The Contractor shall perform the following activities which are necessary to support EPA QA and analytical-related programs, consistent with this contract SOW:

A. Attendance at Specialized Technical Training

The Contractor shall attend specialized training only upon prior issuance of TD specifying the nature of and schedule for training. The Contractor shall attend EPA-specific training (generally EPA-sponsored training) which may include training in EPA-specific computer systems and software, LIMS and Regional LAN systems and EPA-specific SOPs, protocols, and methodologies.

Specialized training may include vendor-specific training in new technologies or specialty equipment/instruments needed to meet technical requirements not recognized at the time of contract award. Vendor-specific training may include training related to analytical instrumentation, data review technology, software or other related material.

B. Development and Delivery of QA and Analytical Training

The Contractor shall provide training to EPA, States, other governmental agencies, and their Contractors in clearly defined, task-related areas, such as training in data review protocols, electronic data validation procedures, and QA guidance and processes. The Contractor shall develop and prepare training materials for the approval by the TOCOR, TM, COR, or QA Officer.

The Contractor shall provide training to EPA personnel only for the purpose of transferring knowledge of a specific analytical or QA technique or technology obtained in the performance of work under this contract.

The Contractor shall be required to submit work plans for EPA approval prior to initiating any activity in support of training. EPA will provide applicable guidance documents or policy statements for Contractor use in developing training. During development of all training materials, EPA will review and approve draft outlines and other deliverables to be utilized in any potential training. The Contractor shall submit draft training materials to EPA for review and approval prior to conducting training.

C. Attendance at Conferences and Meetings

The Contractor shall attend conferences or meetings in order to support specific assignments included in the SOW. This shall include activities such as attendance at a conference to give a technical presentation and attendance at meetings to obtain information necessary to perform

tasks included in the SOW or to present information obtained in performing a task-related function.
During conferences, seminars, meetings and training, all policy and interpretive questions shall be directed back to the TOCOR, TM, or COR for resolution.

D. Implementation of Team Quality Assurance Program:

The Contractor shall implement a Quality Assurance Program in accordance with its Quality Management Plan (QMP) and TOs-specific Quality Assurance Project Plans (QAPPs) for each Region served by the Contractor. The Contractor shall submit a QMP to the COR, for review and approval by EPA. The QMP shall describe the Contractor's organizational quality management policies, processes, roles and responsibilities, and be developed according to "EPA Requirements for Quality Management Plans" (EPA QA/R2, March 2001). For TOs which involve the generation of environmental data, the Contractor shall submit to the COR a QAPP as required by the TOs. The QAPP shall be developed according to "EPA QA/R-5, EPA Requirements for Quality Assurance Project Plans for Environmental Data Operations" (EPA QA/R-5, March 2001). The Contractor shall incorporate in the QMP and QAPP any changes required for EPA approval. The Contractor shall annually review, and if necessary update, the QMP to reflect any changes or revisions to the QA guidance documents referenced and provide a copy to the COR and EPA QAO for approval. EPA Quality Assurance guidance documents are located at: http://www.epa.gov/quality/qa_docs.html.

E. Tracking and Reporting

The Contractor shall maintain a database containing information as it relates to this contract for work performed as described in each task area (i.e., I, II, III, IV, and V) for Superfund and other EPA programs' buy-ins(e.g., Task Area I - Analytical Support - specific analytical costs by parameter , e.g., VOAs, Semi-VOAs, Metals, cyanide, etc.).

The Contractor shall provide the estimated and/or actual costs for performing specific types of analyses and sample preparation on a specified (monthly, quarterly, or annual) basis preferably included in the Contractor generated Monthly Financial Reports. The information provided should include a defined percentage of costs for sample handling and management associated with each fraction (e.g., VOAs, metals, WQPs, etc.) for specific analyses performed. The sample handling and/or sample management costs shall include such costs for sample handling log-in/storage, tracking, reporting, disposal, etc. as a percentage for "sample handling". For example, 30% may be the percentage applied to the cost(s) reported per analysis for sample handling including program management costs for reporting the total "actual" cost.

4. GENERAL REQUIREMENTS

EPA Regions are defined in the attachment entitled "EPA Regions".

The Contractor is ultimately responsible for complying with all Federal, State, and Local governmental work rules, guidance, and regulations.

The Contractor shall conform to the Environmental Management System (EMS) of the EPA Regional Laboratory or location of performance. The EPA EMS is described at: http://www.epa.gov/ems.

The Contractor shall have knowledge of The National Environmental Laboratory Accreditation Conference (NELAC) Institute standards requirements (see: http://www.nelac-institute.org/) and/or ISO/IEC 17025 general requirements for the competence of testing and calibration laboratories, whichever is applicable to the Regional laboratory.

The Contractor shall conform to the Quality Assurance System/Plan of the EPA Regional Laboratory and comply with the current version of The NELAC Institute (TNI) standards and/or ISO/IEC 17025 general requirements referenced therein, as applicable.

The Contractor shall transmit and receive certain information to and/or from various EPA programs and Contractor organizations, such as: Sample Management Office (SMO); the Quality Assurance Technical Support (QATS) contractor; the organizations providing sample and data management and Quality Assurance support to the Analytical Services Branch (ASB); and Regional field sampling/analytical Contractors. Contractor interaction with these activities will be determined by the COR or CO in the TOs. Such interaction is for the purpose of communicating information only and does not include providing direction to or receiving direction from other EPA offices or Contractors.
Computer and computerized word processing systems provided by and used by the Contractor in performance of this contract shall be compatible with EPA systems. Electronic deliverables shall be in a format compatible with the formats in place at the EPA Region requesting the deliverable.

All SOPs developed under this contract become property of the Agency.

5. ESAT ACRONYMS

AA - Atomic Absorption
ASB - Analytical Services Branch, OSRTI
ASTM - American Society for Testing and Materials
CERCLA - Comprehensive Environmental Response, Compensation and Liability Act
CLP - Contract Laboratory Program
CO - Contracting Officer
COR - Contracting Officer's Representative
CSF - Complete Sample Delivery Group File
CWA - Clean Water Act
DAT - Data Assessment Tool
DMA - Demonstrations of Methods Applicability
DNAPL - Dense Non-Aqueous Phase Liquids
DQO - Data Quality Objectives
EMAP - Environmental Monitoring and Assessment Program
EMS - Environmental Management Systems
EPA - U.S. Environmental Protection Agency

ESAT - Environmental Services Assistance Team
FASP - Field Analytical Support Program
FASTAC - Field and Analytical Services Teaming Advisory Committee
FIFRA - Federal Insecticide, Fungicide and Rodenticide Act
FRC - Federal Records Center
FRP - Federal Response Plans
GFAA - Graphite Furnace Atomic Absorption
GPS - Global Positioning Systems
HPLC - High Pressure Liquid Chromatography
IC - Ion Chromatography
ICP/AES - Inductively Coupled Plasma - Atomic Emission Spectrometry
ICP/MS - Inductively Coupled Plasma - Mass Spectrometry
GC - Gas Chromatography
GC/HRMS - Gas Chromatography/High Resolution Mass Spectrometry
GC/MS - Gas Chromatography/Mass Spectrometry
GC/PID - Gas Chromatography/Photo-Ionization Detector
GIS - Geographical Information System
HPLC - High Pressured Liquid Chromatography
LAN - Local Area Network
LIMS - Laboratory Information Management System
NAPL - Non-Aqueous Phase Liquids
NCP - National Contingency Plan
NELAC - National Environmental Laboratory Accreditation Conference
OSRTI - Office of Superfund Remediation and Technology Innovation
OSW - Office of Solid Waste
PCR- Polymerase Chain Reaction
PCB - Polychlorinated Biphenyls
PE - Performance Evaluation
PRP - Potentially Responsible Party
QA - Quality Assurance
QAO - Quality Assurance Officer
QAPP - Quality Assurance Project Plans
QA/QC - Quality Assurance/Quality Control
QATS - Quality Assurance Technical Support
QMP - Quality Management Plan
RAS - Routine Analytical Services
RCRA - Resource Conservation and Recovery Act
RQMP - Regional Quality Management Plans
RSCC - Regional Sample Control Center
SAP - Sampling and Analysis Plans
SDG - Sample Delivery Group
SEDD - Staged Electronic Data Deliverable
SIM - Selected Ion Monitoring
SMO - Sample Management Office
SOP - Standard Operating Procedure
SOW - Statement of Work

TD - Technical Direction
TM - Task Monitor
TO - Task Order
TOCOR - Task Order Contracting Officer's Representative
TSCA - Toxics Substances Control Act
WQP - Water Quality Parameters

Attachment 2 –
Quality Assurance Surveillance Plan (QASP)

QUALITY ASSURANCE SURVEILLANCE PLAN (QASP)

1. INTRODUCTION

This quality assurance surveillance plan (QASP) is pursuant to the requirements listed in the contract Performance Work Statement (PWS). This plan sets forth the procedures and guidelines the Government will use in ensuring the required performance standards or services levels are achieved by the Contractor.

1.1 Purpose

The purpose of the QASP is to describe the systematic methods used to monitor performance and to identify the required documentation and the resources to be employed. The QASP provides a means for evaluating whether the Contractor is meeting the performance standards/quality levels identified in the PWS and the Contractor's Quality Management Plan (QMP). It is intended that the QASP be a tool to guide the Government in assessing Contractor performance.
This QASP defines the roles and responsibilities of all members of the acquisition team, identifies the performance objectives, defines the methodologies used to monitor and evaluate the Contractor's performance, describes quality assurance documentation requirements, and describes the analysis of quality assurance monitoring results.

1.2 Performance Management Strategy

The Contractor is responsible for the quality of all work performed. The Contractor measures that quality through the Contractor's own QMP program. The Contractor's QMP will set forth the staffing and procedures for self-inspecting the quality, timeliness, responsiveness, customer satisfaction, and other performance requirements in the PWS; and for reporting its performance to the designated government representative. The government representative(s) will monitor performance and review performance reports furnished by the Contractor to determine how the Contractor is performing against communicated performance objectives. The Government will make its determination regarding the Award Term incentive based on performance measurement metric data and notify the Contractor of those decisions. The Contractor will be responsible for making required changes in processes and practices to ensure performance is managed effectively.

2. ROLES AND RESPONSIBILITIES

2.1 The Contracting Officer

The Contracting Officer (CO) is responsible for monitoring contract compliance, contract administration, and cost control and for resolving any differences between the observations documented by the COR and the Contractor. The CO will designate one full-time, contract level COR as the government authority for performance management. The number of additional representatives that will monitor performance depends on the complexity of the services measured, as well as the Contractor's performance, and must be identified and designated by the CO.

2.2 The Contracting Officer's Representative

The Contract-level Contracting Officer' Representative (COR) and Task Order COR (TOCOR)

are designated in writing by the CO to act as his or her authorized representative to assist in administering the contract and resultant task orders. Additionally, the CO may choose to appoint a Task Monitor (TM) to assist with the administration of distinct tasks under a particular task order. To be appointed, the TM must be a certified COR. COR limitations are contained in the written appointment letter. The COR is responsible for technical administration of the project and ensures proper government surveillance of the Contractor's performance. The COR is not empowered to make any contractual commitments or to authorize any contractual changes on the Government's behalf. Any changes that the Contractor deems may affect contract price, terms, or conditions shall be referred to the CO for action. The COR will have the responsibility for the inspection, acceptance, and evaluation of the Contractor's work performance. Government surveillance may occur under the inspection of services clause for any service relating to the contract.

3. IDENTIFICATION OF ACCEPTABLE QUALITY LEVELS

The required performance standards and/or quality levels are included in the PWS and in Attachment 1, Performance Requirements Summary (PRS). The PRS will be tied to the Award Term determination, described in the Section H clause Award Term Incentive Plan (EPAAR 1552.216-78), and the Contractor Performance Assessment Reporting System (CPARS) evaluations.

4. SURVEILLANCE METHODS

Surveillance methods will be used by the Contract-level COR, TOCOR, and/or TM to evaluate Contractor performance when appropriate. The primary methods of surveillance are:

- Random Inspection
- Periodic Inspection
- 100% Inspection

5. PLACE OF SURVEILLANCE

The Government reserves the right to perform quality assurance at the contract place of performance.

6. ANALYSIS OF QUALITY ASSURANCE ASSESSMENT

6.1 Reporting

The TOCOR/TM will summarize in writing the overall results of the quality assurance surveillance of the Contractor's performance on task orders to the COR. These results will be considered during the Contractor's annual performance appraisal and Award Term evaluation. The final results of the Contractor's annual performance will be inputted into CPARS in accordance with system requirements and using the definitions for each rating (i.e. Exceptional, Very Good, Satisfactory, Marginal, Unsatisfactory) contained in the DoD CPARS Policy Guide that is in effect at the time of the annual evaluation. The compilation of evaluation results from the COR, TOCOR, TM, and CO as finalized in CPARS will enable the Government to demonstrate whether the Contractor is meeting the stated performance standards and AQLs and

will enable the CO to make his or her Award Term Incentive Determination.

6.2 Reviews

The Contracting Officer will hold meetings with the COR, Contractor Representative, and other government or contract representatives, as deemed necessary, to discuss Contractor performance. However, if the need arises, the Contractor may meet with the CO and/or COR per the Contractor's request. The agenda of the reviews may include:

- Monthly performance assessments
- Issues and concerns of the parties
- Projected outlook for upcoming months and progress against expected trends, including a corrective action plan analysis if required
- Recommendations for improved efficiency and/or effectiveness

(NEXT)

7. PERFORMANCE REQUIREMENTS TABLE

Performance Requirements	Performance Standards	Monitoring Methods	AQL	Incentive/ Disincentive
Quality of Product or Service	The contractor shall effectively perform all services in accordance with the PWS, the contract and as assigned on each task order, including: • All reports/data must be accurate and complete • Service provided must meet the specifications of the contract • The contractor's work must measure up to commonly accepted technical and professional standards • Government involvement must be limited to solve problems that arose during performance	• 100% Inspection of deliverables • Inspection using Monthly Reports and other Reports of Work • Random Inspection of contractor performance	The Contractor must achieve an Average Past Performance Score of 3.0 on all task orders for the contract Base Period to be eligible for the contract-level incentive. (For more information, see the Section H clause: Award Term Incentive Plan (EPAAR 1552.216-78) Alternate I)	If ≥ 3.0, the Award Term may be exercised. If < 3.0, the Award Term may not be exercised.
Schedule	The contractor shall adhere to all delivery schedules and submit all deliverables to the Government timely and IAW contract requirements and/or task order SOWs.	• 100% Inspection of deliverables • Inspection using Monthly Reports and other Reports of Work • Random Inspection of contractor performance		
Cost Control	The contractor shall effectively manage and control contract costs, to include: • Keeping within the total estimated price • Using innovative efforts that result in cost savings • Submitting current, accurate and complete billings • Maintaining budgetary internal controls • Monitoring, tracking, and accurately reporting level of effort, labor costs, and other expenditures	• 100% Inspection of invoices • Periodic Inspection using Monthly Reports and other Reports of Work		
Business Relations	The contractor shall be proactive in its approach to problem resolution and dealing with Government representatives. The contractor's communication with the Government shall be clear, effective, and timely. The contractor shall take corrective action and resolve problems with limited Government interaction. The contractor shall effectively manage subcontractors, including: • Making timely awards of subcontracts • Managing subcontractor costs • Identifying and resolving subcontract problems affecting overall contract performance	• Inspection using Monthly Reports and other Reports of Work • Random Inspection of contractor performance		
Management of Key Personnel	The contractor shall select, retain, support, and replace (when necessary), key personnel timely so as not to disrupt service on the contract. The contractor shall: • support key personnel so they are able to work effectively • take corrective action if a key personnel does not perform well • replacements must meet or exceed the qualifications of the position as described in the contract schedule	• Inspection using Monthly Reports and other Reports of Work • Random Inspection of contractor performance • 100% Inspection of any Key Personnel replacements		
Utilization of Small Business	The contractor shall provide maximum practicable opportunity for Small Businesses to participate in contract performance. The contractor shall comply with all terms and conditions in the contract relating to Small Business participation and shall adhere to the individual goals stated in the Subcontracting Plan.	• Biannual Inspection of eSRS Reports		

Attachment 3 –
Agency Security Requirements for Contractor Personnel

AGENCY SECURITY REQUIREMENTS FOR CONTRACTOR PERSONNEL

To safeguard the EPA workforce and comply with Homeland Security Presidential Directive 12 (HSPD-12), Executive Order (E.O.) 13467, E.O. 13488 and Office of Personnel Management (OPM) regulations, the EPA requires the following:

- **For Unescorted Access for 6 Months or Less**
  Contractor employees needing unescorted physical access to a controlled EPA facility[1] for 6 months or less must be determined by the EPA to be fit before being issued a physical access badge (picture ID). A fitness determination is, per E.O. 13488, a decision by an agency that an individual has or does not have the required level of character and conduct necessary to perform work for or on behalf of a federal agency as a contractor employee. A favorable fitness determination is not a decision to contract with an individual. Contractor employees must undergo, at a minimum, an FBI fingerprint check of law enforcement and investigative indices (see Section 2).

- **For Unescorted Access for More than 6 Months**
  Contractor employees needing unescorted access to a controlled EPA facility for more than 6 months are required to have an HSPD-12 smart card, called an EPASS badge. Eligible contractor employees must have a completed or initiated background investigation at the National Agency Check and Inquiries (NACI) level or above, comply with all other investigative and HSPD-12-related requirements, and be determined by the EPA Personnel Security Branch (PSB) to be fit (see Section 3). "Initiated" means that all initial security requirements have been met (paperwork is completed, submitted, and PSB-approved; favorable fingerprint results have been received; funding has been provided to cover the cost of the investigation; and PSB has sent notification that the individual may begin work).

To ensure timely contract performance, the contractor must be prepared to immediately submit upon contract award the contractor employee information detailed in Section 1.c. This applies also to incumbent contractors' employees for follow-on acquisitions. All contractor employees under a new contract are subject to the requirements in Sections 2 or 3; however, the time needed to meet security requirements may be shorter for personnel who already have a favorable fitness determination.

Contractor employees may begin work on the contract start date provided all applicable documentation in Sections 1, 2, and 3 has been received by the EPA and there is no derogatory information to preclude a favorable determination. Timely submission of contractor employees' security forms and other required documentation is essential.

A favorable determination may be revoked at any time should the EPA discover derogatory information that deems a contractor employee unfit. Contractor employees deemed unfit will not

[1] A controlled facility is an area to which security controls have been applied to protect agency assets. Entry to the controlled area is restricted to personnel with a need for access.

be allowed to continue under the contract, and the contractor will be responsible for providing replacements acceptable to the EPA.

The EPA may make a determination of a contractor employee's fitness at any of the following points:

- When the EPA prescreens the individual's security forms. "Red flag" issues include:
  - Having been fired from a previous job or having left under unfavorable circumstances within the past 5 years (or longer, depending on the security form questions and type of investigation);
  - Failure to register with the Selective Service System (applies to male applicants born after December 31, 1959);
  - Within the past 5 years (or longer, depending on the security form questions and type of investigation), any arrest, charge, or conviction that has been upheld for violent or dangerous behavior or a pattern of arrests that demonstrates disregard for the law;
  - Illegal drug use within the previous year, or drug manufacture or other involvement for profit within the past 5 years (or longer, depending on the security form questions and type of investigation).
- When FBI fingerprint results are returned to the EPA;
- When OPM returns the individual's investigative results to the EPA;
- When the EPA becomes aware that the contractor employee may not be fit to perform work for or on behalf of a federal agency. The contractor is responsible for monitoring its employees' fitness to work and notifying the EPA immediately of any contractor employee arrests or illegal drug use.

1) Initial Contractor Requirements

This section contains the contractor's initial security requirements, which must be met before contractor employees can perform work **on-site** at EPA under this contract.

a) The contractor must identify a point of contact (POC) and alternate POC to facilitate security processes.

b) The contractor must ensure that all foreign nationals who will work under this contract have a valid U.S. Immigrant Visa or nonimmigrant Work Authorization Visa. The contractor must use E-Verify to verify employment eligibility as required by the FAR.

c) The EPA requires contractor employee information for the investigative and EPASS processes. Immediately upon contract award or anytime new personnel are brought onboard, the contractor POC must log on to a secure, EPA-identified portal, create an account, and submit complete contractor employee information: Full name (as found on employment records and driver's license), Social Security number, date of birth, place of birth (city, state, country), citizenship, employee email address, EPA Program Office or Regional Office, and EPA work city and state. Note: Incomplete names, inaccurate names, and nicknames are unacceptable and may delay contractor employees' start date. Instructions and the portal link will be provided upon contract award.

d) EPA will provide the login information for the portal. After submission of the contractor employees' data, the Contracting Officer's Representative (COR) will notify the contractor POC if additional information or corrections are required. The COR's approval of the information triggers the investigative and EPASS processes.

2) Requirements for Contractor Employees Needing Unescorted Access for 6 Months or Less

This section contains the requirements for contractor employees who are not eligible for an EPASS badge but who need unescorted physical access. The minimum security requirement is an FBI fingerprint check.

a) Before the contractor employee can begin work on-site at the EPA:
   i) He/she must be fingerprinted by the EPA; arrangements will be made by the COR.
   ii) The contractor employee must satisfactorily respond to all questions/information requests arising from the EPA's review of the fingerprint results.
   iii) The EPA must determine that the fingerprint results are favorable.

Once all requirements in Section 2(a) are met, the COR/PO and contractor employee will be notified that the contractor employee can start work. Contractor employees will be issued a physical access badge and may work on-site at EPA. Contractor employees must sign a receipt acknowledging responsibility to safeguard the badge and surrender it when required (see Section 4.b).

3) **Requirements for Contractor Employees Needing Unescorted Access for more than 6 Months**

This section contains the requirements for contractor employees who are eligible for an EPASS badge and who must have, at a minimum, a NACI background investigation completed or initiated. Contractor employees needing access to sensitive information or otherwise occupying moderate or high-risk positions must undergo an investigation above the NACI level. The EPA will assign a position risk level to each position on the contract and identify which contractor employees are EPASS-eligible.

a) EPASS-eligible contractor employees must undergo a background investigation appropriate to the risk level of the position occupied, as specified by the EPA; the minimum acceptable investigation is a NACI.

b) Employees who have previously undergone a federal background investigation at the required level and who have worked for or on behalf of the federal government without a break in service since the investigation was completed may not need a new investigation. The EPA will verify the investigative information and notify the contractor employee and COR if a new investigation is required. If an investigation is not needed, the contractor employee must still be fingerprinted by the EPA for an FBI fingerprint check and have favorable fingerprint results returned before beginning work on-site at EPA.

c) Before beginning work on-site at the EPA, contractor employees who require a new background investigation must:
   i) Complete and submit the appropriate OPM security questionnaire specified by the EPA via OPM's e-QIP system. Access to e-QIP will be provided by the EPA; the questionnaires are viewable at www.opm.gov/forms. Foreign national contractor employees must, on the security questionnaire, provide their alien registration number or the number, type, and issuance location of the visa used for entry to the United States.
   ii) For a NACI only, also complete the OF 306, Declaration for Federal Employment, as required by OPM for any NACI and available at http://www.opm.gov/forms/pdf_fill/of0306.pdf. Contractor employees must answer questions 1-13 and 16, then sign the form on the "Applicant" line, 17a.
   iii) Follow all instructions on the form(s), answer all questions fully, and submit signature pages as directed by the EPA.
   iv) Be fingerprinted by the EPA; arrangements for fingerprinting will be made by the COR.
   v) Satisfactorily respond to all questions/information requests arising from the EPA's review of the forms or fingerprint results.
   vi) Receive favorable fingerprint results.

d) Once all requirements in Section 3(c) are met, the COR/PO and contractor employee will be notified that the contractor employee can start work. Contractor employees may work on-site at EPA while OPM conducts the background investigation.

e) At a time and location specified by the EPA, contractor employees must report in person for EPASS identity (ID) proofing and show two unexpired forms of identification from the lists on Department of Homeland Security Form I-9. At least one of the documents must be a valid, unexpired state or federal government-issued photo ID; non-U.S. citizens must show at least one ID from Column A on Form I-9.

f) Before being issued an EPASS badge, contractor employees must sign a receipt acknowledging responsibility to safeguard the badge and surrender it when required (see Section 4.b). Contractor employees must meet all EPASS badge life-cycle requirements.

g) A contractor employee has the right to appeal, in writing through the contractor POC to the COR, the denial or revocation of an EPASS badge. If the COR believes the appeal is justified, he/she will forward it to the Security Management Division (SMD). SMD's decision on behalf of the EPA will be final.

4) Ongoing Contractor Security Responsibilities

a) The contractor POC must immediately provide updated information via the secure portal when new contractor employees are added to the contract. These contractor employees must meet all initial investigative requirements before beginning work on-site at EPA.

The contractor POC must also update information via the secure portal whenever a contractor employee leaves the contract.

b) The contractor POC must ensure that all EPA physical access and EPASS badges are returned to the COR as soon as any of the following occurs, unless otherwise determined by the Agency: (i) when the badge is no longer needed for contract performance; (ii) upon completion of a contractor employee's employment; (iii) upon contract completion or termination.

c) These EPA security requirements must be incorporated into all resulting subcontracts wherein contractor personnel working under the subcontract require EPA physical access.

Attachment 4 –
Laboratory Space and Access Requirements – Region 2

LABORATORY SPACE AND ACCESS REQUIREMENTS

All Contractor staff will be given a Smartcard, after security investigation is completed, to gain access to the Edison Environmental Center Complex and Region 2 Laboratory. EPA permission is needed to access the Region 2 Laboratory, designated work and office areas during non-business hours. Support equipment and supplies for operations in the laboratory and furniture for the office space will be provided by EPA.

The actual number of work stations assigned to the contractor will be based on actual team size. Diagrams of the designated work and office space are included below. Equipment available for use by the contractor in Government Furnished Space is included in the Laboratory Property List.

*Note: In the government provided space, all workstations and cubicles will be provided with a chair, personal computer (PC) connected to the Local Area Network (LAN), and telephone which will be maintained by the Government. ESAT contractors will be assigned LAN IDs for connection to the LAN and associated applications.

Sample Receipt Area

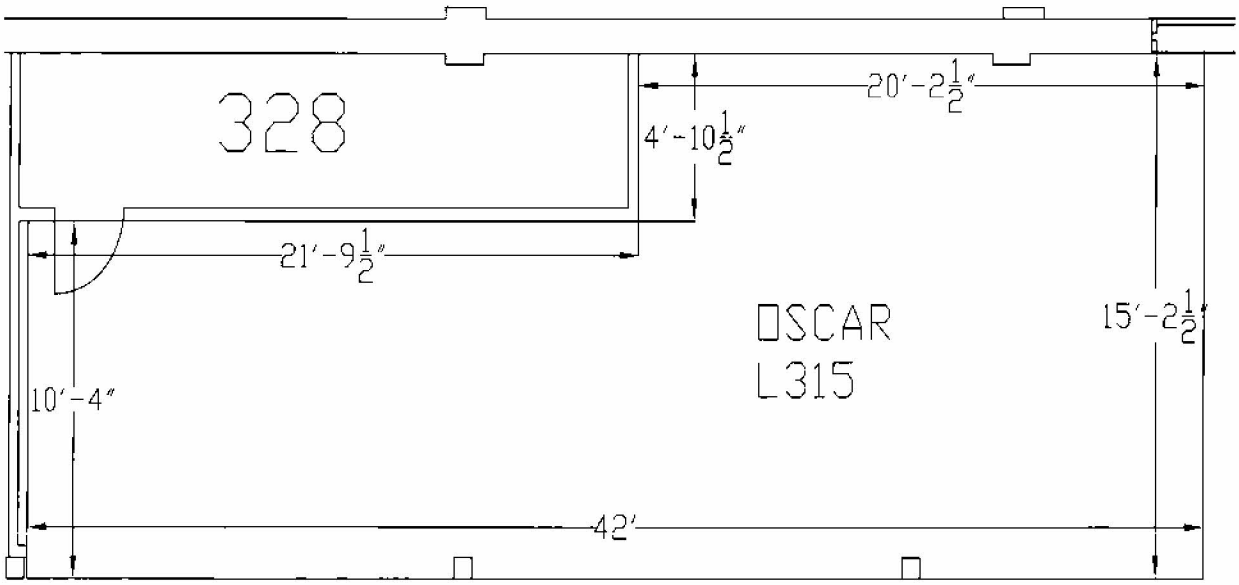

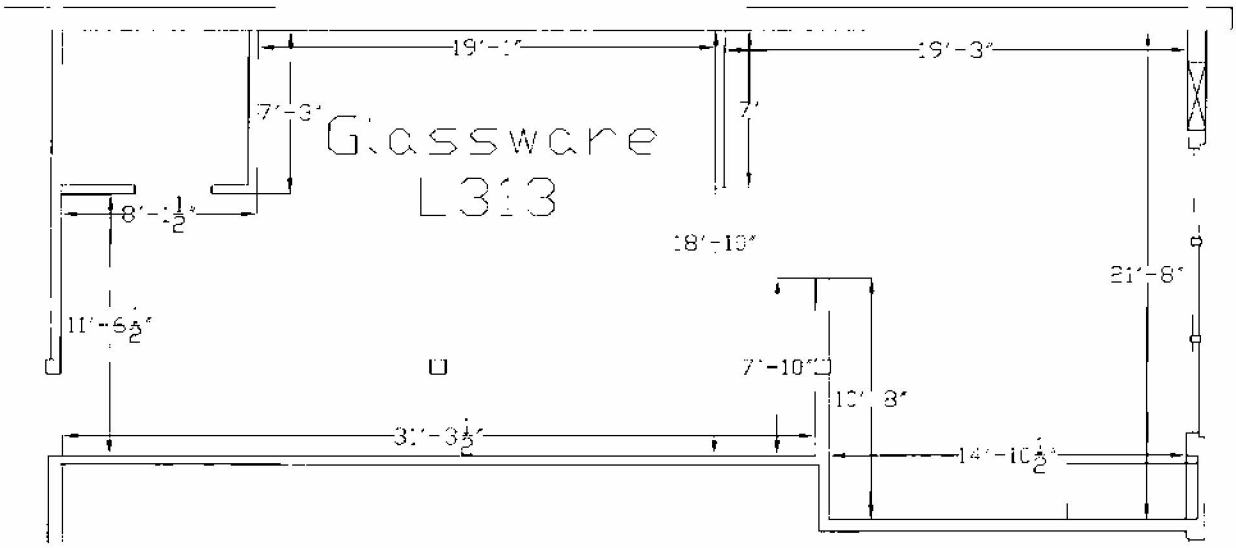
Glassware
L313
19'-1"
19'-3"
7'-3"
7'
8'-1½"
18'-10"
21'-8"
11'-6½"
7'-10"
10'-8"
31'-3½"
14'-10½"

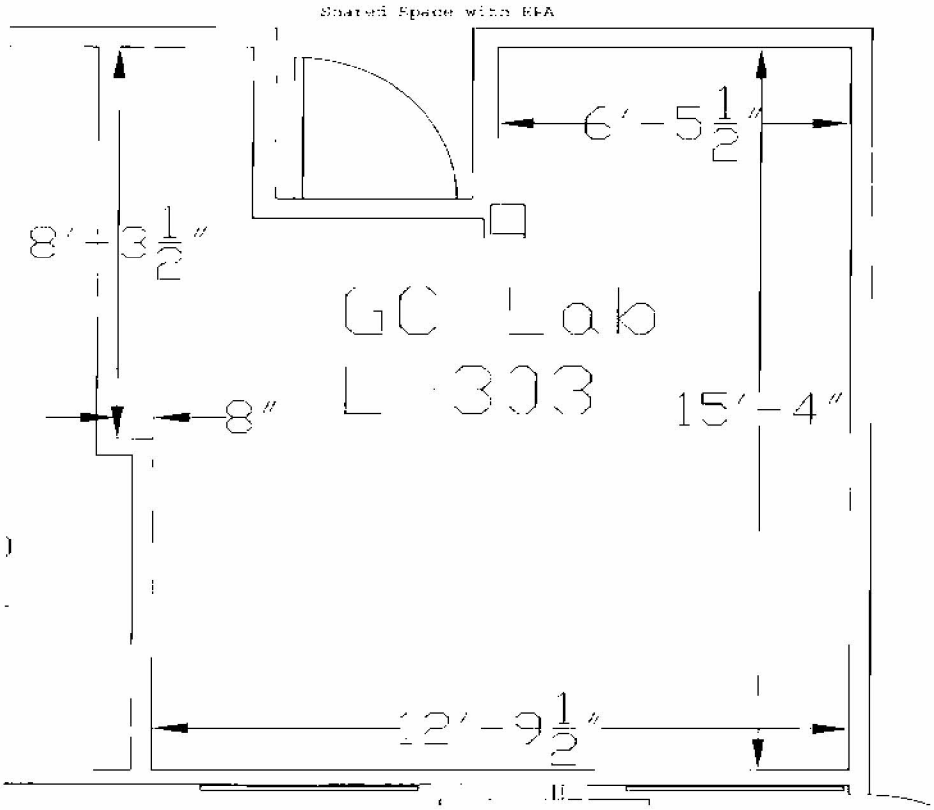
Shared Space with EEA
6'-5½"
8'-3½"
GC Lab
L 303
8"
15'-4"
12'-9½"

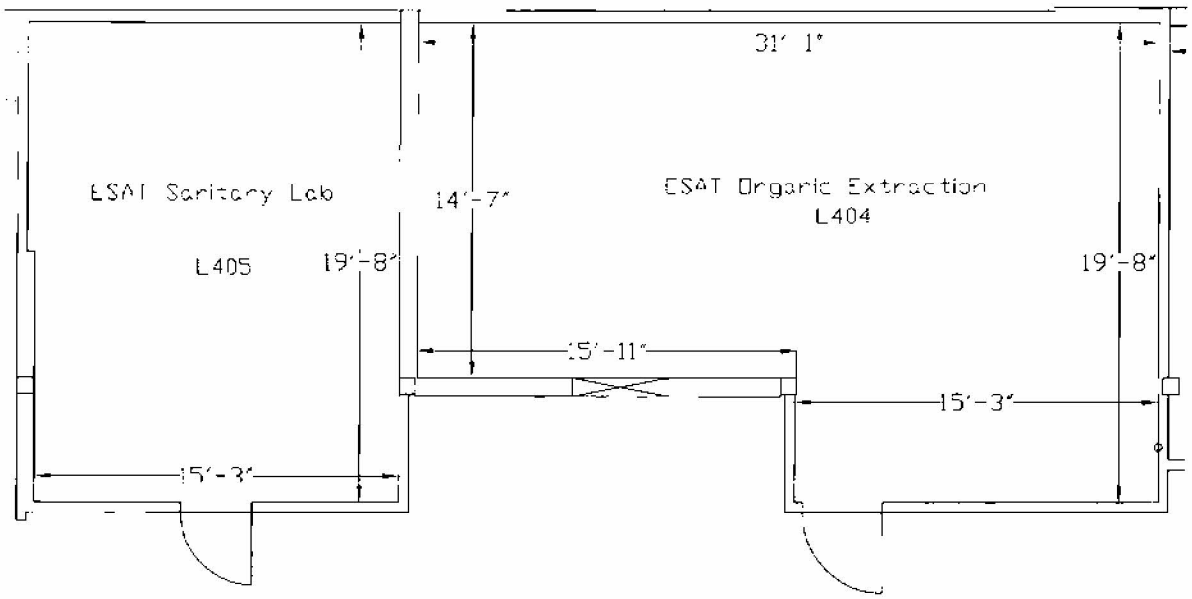
31' 1"
ESAT Sanitary Lab
L405
14'-7"
ESAT Organic Extraction
L404
19'-8"
19'-8"
15'-11"
15'-3"
15'-3"

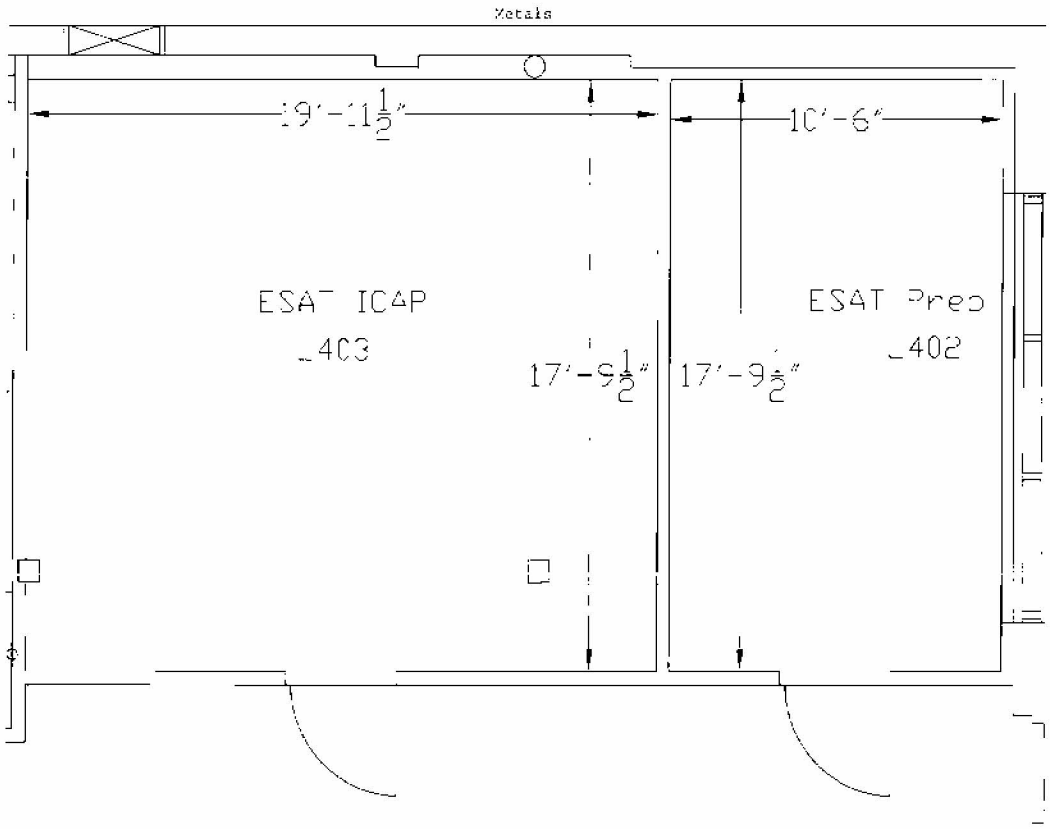
Metals
19'-11½"
10'-6"
ESAT ICAP
403
17'-9½"
17'-9½"
ESAT Prep
402

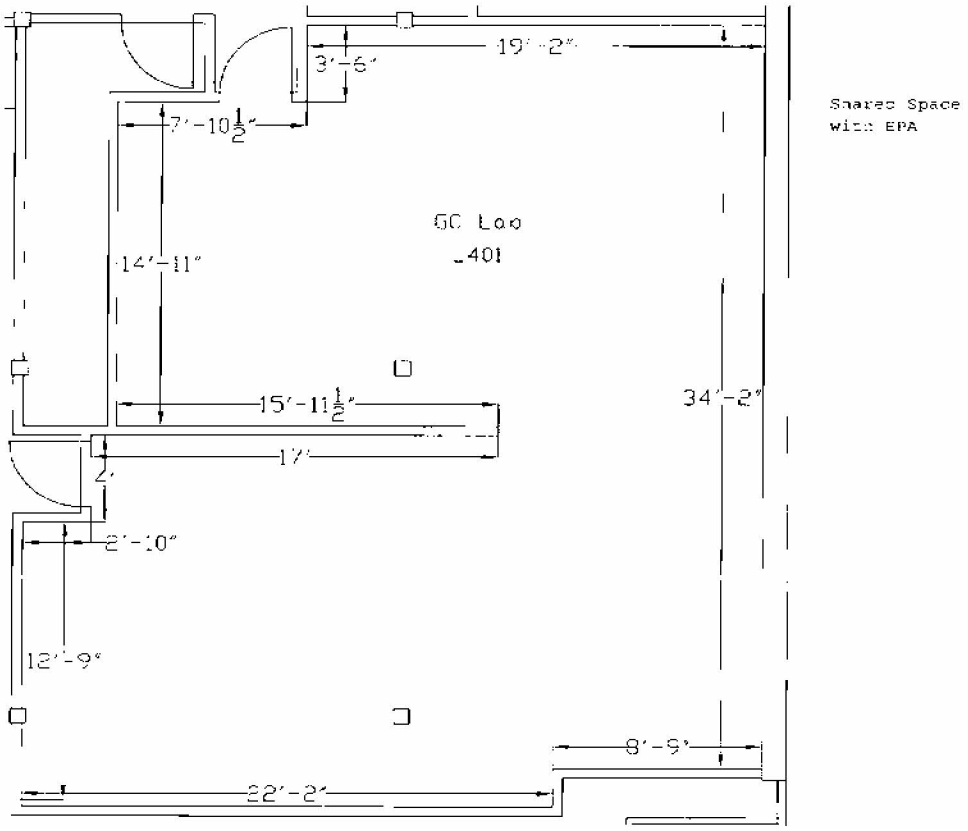
19'-2"
3'-6"
7'-10½"
Shared Space
with EPA
GC Lab
401
14'-11"
15'-11½"
34'-2"
17'
2'
2'-10"
12'-9"
8'-9"
22'-2"

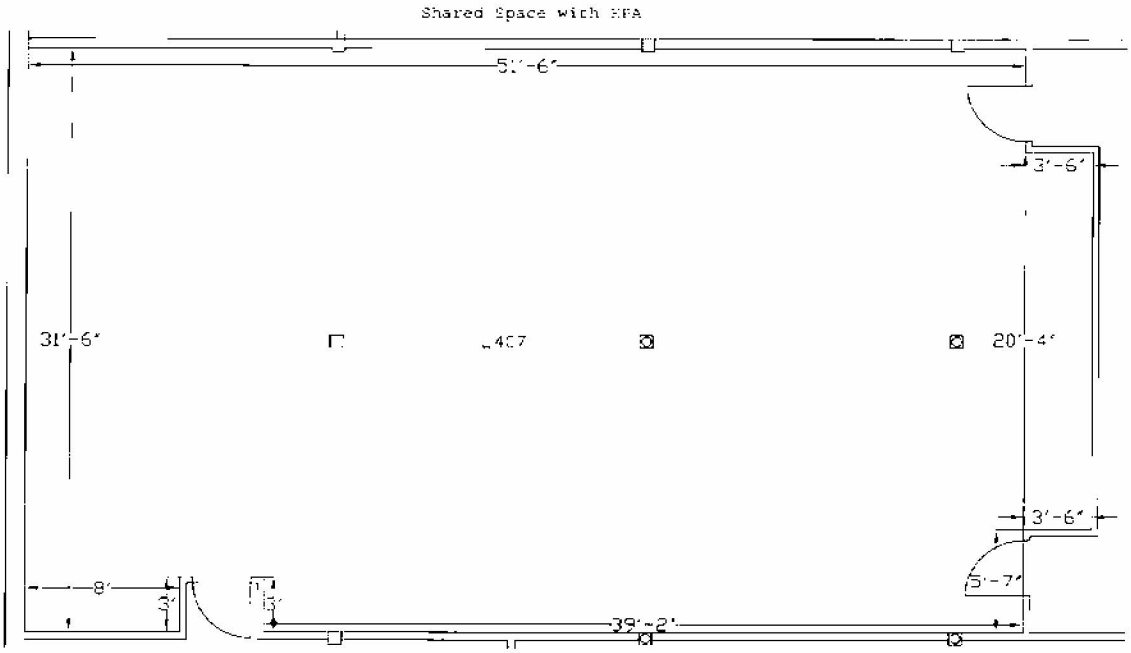
Shared Space with EPA
51'-6"
3'-6"
31'-6"
407
20'-4"
3'-6"
5'-7"
8'
3'
39'-2"

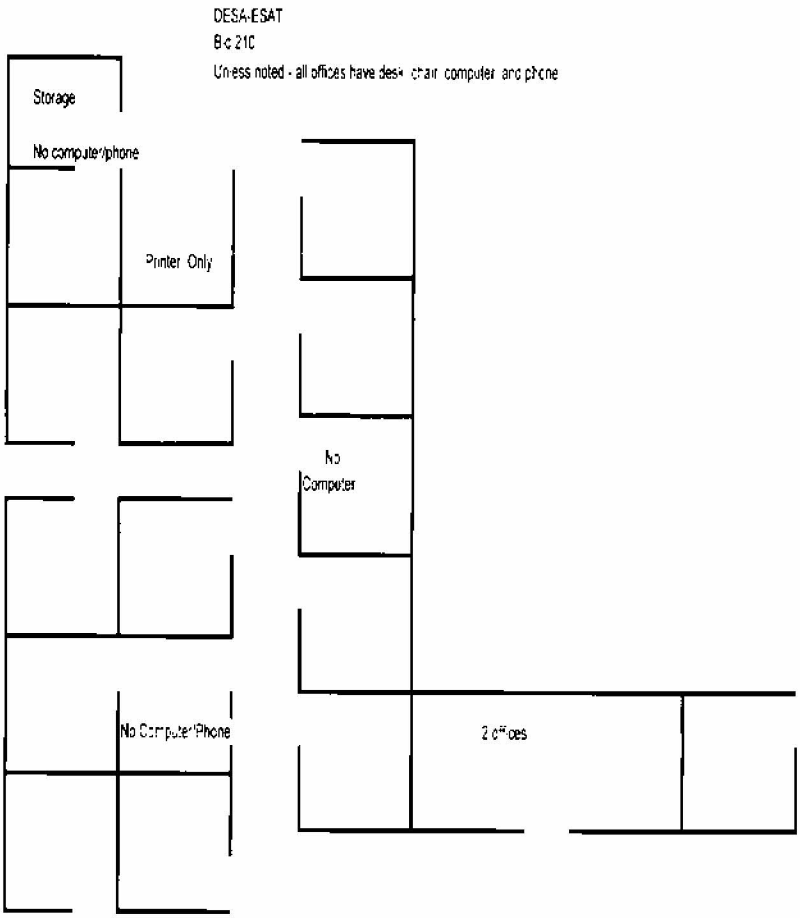

This document is US Government property, copying, disseminating, and distributing are strictly prohibited without express written authorization from the US EPA.

Attachment 5 –
Government Furnished Property List

GOVERNMENT FURNISHED PROPERTY LIST

There are currently no items assigned as Government Furnished Property (GFP) under this contract.

Attachment 6 –
Labor Category Descriptions

LABOR CATEGORY DESCRIPTIONS

(b)(4)

Attachment 7 –
Reporting Requirements

REPORTING REQUIREMENTS

I. Contract Reporting Requirements

The reports listed in the table below shall be prepared by the contractor and distributed to the designated recipient(s) in accordance with each specified requirement. Each report shall cite the contract number, identify the U.S. Environmental Protection Agency as the sponsoring agency, and identify the name of the contractor preparing the report. Unless otherwise noted, all reports are to be submitted electronically in a searchable PDF format. A detailed description of each required report follows the table.

At the end of each contract year, the contractor shall compile all reports required for that year and load them onto a single electronic disc. One copy of the disk shall be mailed to the Contracting Officer and one copy of the disk shall be mailed Contract-Level Contracting Officer's Representative.

The contractor shall deliver required reports to the identified recipients in accordance with the following schedule:

Name of Report	**Due Date**	**Recipient(s)**
Monthly Technical Progress Reports	Within 7 business days after the end of each billing cycle	CO, COR, ACOR, EPM
Monthly Financial Reports	Within 7 business days after the end of each billing cycle	CO, COR, ACOR, EPM
Monthly Program-Specific and Site-Specific Cost Accounting Reports	Within 7 business days after the end of each billing cycle	CO, COR, ACOR, EPM, FMB
Quality Assurance Project Plans and Contract Level Quality Management Plan	As directed by the COR or TOCOR (Technical Direction)	CO, COR, ACOR, TOCOR, QAM
Health and Safety Plans	As required by 40 CFR 1910.120(b): "Safety and Health Program," or as directed by the COR or TOCOR (Technical Direction)	CO, COR, ACOR, TOCOR
Other Reports (*See Section F below.*)	As directed by the COR or TOCOR (Technical Direction)	CO, COR, ACOR, TOCOR

CO = Contracting Officer
COR = Contract-Level Contracting Officer's Representative
ACOR = Alternate Contract-Level Contracting Officer's Representative
TOCOR = Task Order Contracting Officer's Representative
QAM = Quality Assurance Manager (Regional)
EPM = ESAT Project Manager (Headquarters)
FMB = Superfund Financial Management Branch (Headquarters)

Required Reports

A. Monthly Technical Progress Reports

The contractor shall submit Monthly Technical Progress Reports to the COR and the CO within 7 business days after the end of each billing cycle. The Monthly Technical Progress Reports shall include all the information required by EPAAR 1552.211-72 Monthly Progress Report (Tailored) contained in this contract.

B. Monthly Financial Progress Reports

The contractor shall submit Monthly Financial Progress Reports to the COR and the CO within 7 business days after the end of each billing cycle. The Monthly Financial Progress Reports shall include the all information required by EPAAR 1552.211-72 Monthly progress report (tailored) included in this contract.

C. Monthly Program-Specific and Site-Specific Cost Accounting Reports

The contractor shall submit both the program-specific and site-specific cost accounting reports to the Contracting Officer's Representative within 7 business days after the end of each billing cycle.

The contractor shall be responsible for maintaining records and reporting all contract costs by EPA Superfund Program accounting numbers, specifically by site and TO. Site-specific accounting shall be in accordance with the requirements set forth in Attachment 9. Site-specific or other accounting numbers shall be on the TO documents or supplied with Technical Direction. The sites may include Superfund or other supported non-Superfund sites.

The contractor shall be responsible for maintaining records and reporting all contract costs incurred by EPA program. Program specific accounting shall be broken down by number of active TOs, current and cumulative labor hours, current and cumulative labor costs, current and cumulative materials costs, and current and cumulative total costs.

D. Quality Assurance Project Plans

As specified in FAR 52.246-11 (Feb 1999), Higher-Level Contract Requirement (Government Specification), the contractor shall prepare QA Project Plans (QAPPs) based on Regional requirements. Copies of contractor QAPP shall be submitted to the Contracting Officer's Representative and the EPA Regional QA Manager for review and written approval in accordance with contract and TO requirements. The contractor's QAPP shall describe specific procedures and responsibilities needed to accomplish the QA specifications in the task order level SOW.

As necessary, QAPPs shall be updated by the contractor to reflect changes in procedures. Such changes shall be subject to Contracting Officer's Representative approval.

E. Health and Safety Plans

Upon award of contract, as specified by the Regional ESAT Laboratory, the contractor shall prepare a Team Health and Safety Program Plan, based on:

1. EPA Regional Health and Safety Plans or other written EPA health and safety guidelines; and/or
2. Work rules that comply with Federal, state, and local government requirements.

Health and Safety Plans shall be prepared in accordance with 40 CFR 1910.120(b) ("Safety and Health Program"), and Regional guidance including any future changes in these requirements. A copy of the Team Health and Safety Plan shall be submitted to the Contracting Officer's Representative within 60 days following contract award. This plan shall be reviewed annually and updated by the contractor to reflect any changes in health and safety requirements.

All hazardous site related activity conducted in the field at Superfund or other sites (such as with a Field Analytical Support Program (FASP) unit shall require a separate site-specific Health and Safety Plan. Copies of contractor health and safety plans shall be submitted to the Contracting Officer's Representative prior to beginning work.

F. Other Reports

The contractor shall design, obtain Contracting Officer's Representative approval, and deliver such other reports at the direction of the Contracting Officer's Representative or as may be necessary to the execution and monitoring of activities under this contract in accordance with the contract scope of work. The cost for developing these other reports may be directly charged to the task order level and shall not be built into the contractor's fully burdened loaded labor rates.

Examples of other reports may include, but are not limited to the following:

Weekly Activities Report(s)/Meetings

The contractor shall submit a weekly activities report that provides the status of work in progress and/or planned activities for each active task order. (NOTE: Contractor team members may be required to attend weekly meetings during routine working hours.) The content and format for this report will be described in the task order requirements. Updates may be required on a daily basis for high visibility projects.

Technical Reports

Documents/reports required in the performance of contract activities shall be submitted by the contractor as defined in TOs, SOPs and/or through technical direction.

G. Report Distribution

The contact information and mailing addresses for the individuals listed below is included in the Section G contract clause titled, Contract Administration Representatives. Specific recipient

names and addresses are subject to change during the term of the contract. The contractor will be notified by the COR and/or CO when these changes occur.

(1) Contracting Officer's Representative (COR)
(2) Alternate Contracting Officer's Representative (Alt COR)
(3) Contracting Officer (CO)
(4) Regional QA Manager (For QA Project Plans only)
(5) ESAT Program Manager (Headquarters)
(6) EPA Superfund Financial Management Branch (Headquarters)

Attachment 8 –
Invoice Preparation Instructions

INVOICE PREPARATION INSTRUCTIONS
SF 1034

The information which a contractor is required to submit in its Standard Form 1034 is set forth as follows:

(1) **U.S. Department, Bureau, or establishment and location** - insert the names and address of the servicing finance office unless the contract specifically provides otherwise.

(2) **Date Voucher Prepared** - insert date on which the public voucher is prepared and submitted.

(3) **Contract/Delivery Order Number and Date** - insert the number and date of the Contract and delivery order, if applicable, under which reimbursement is claimed.

(4) **Requisition Number and Date** - leave blank.

(5) **Voucher Number** - insert the appropriate serial number of the voucher. A separate series of consecutive numbers, beginning with Number 1, shall be used by the Contractor for each new contract. When an original voucher was submitted, but not paid in full because of suspended costs, resubmission vouchers should be submitted in a separate invoice showing the original voucher number and designated with the letter "R" as the last character of the number. If there is more than one resubmission, use the appropriate suffix (R2, R3, etc.)

(6) **Schedule Number; Paid By; Date Invoice Received** - leave blank.

(7) **Discount Terms** - enter terms of discount, if applicable.

(8) **Payee's Account Number** - this space may be used by the Contractor to record the account or job number(s) assigned to the contract or may be left blank.

(9) **Payee's Name and Address** - show the name of the Contractor exactly as it appears in the contract and its correct address, except when an assignment has been made by the Contractor, or the right to receive payment has been restricted, as in the case of an advance account. When the right to receive payment is restricted, the type of information to be shown in this space shall be furnished by the Contracting Officer.

(10) **Shipped From; To; Weight Government B/L Number** - insert for supply contracts.

(11) **Date of Delivery or Service** - show the month, day and year, beginning and ending dates of incurrence of costs claimed for reimbursement. Adjustments to costs for prior periods should identify the period applicable to their incurrence, e.g., revised provisional or final indirect cost rates, award fee, etc.

(12) **Articles and Services** - insert the following: "For detail, see Standard Form 1035 total amount claimed transferred from Page of Standard Form 1035." Type "COST REIMBURSABLE-PROVISIONAL PAYMENT" or “INDEFINITE QUANTITY/INDEFINITE

DELIVERY-PROVISIONAL PAYMENT" on the Interim public vouchers. Type "COST REIMBURSABLE-COMPLETION VOUCHER" or "INDEFINITE QUANTITY/INDEFINITE DELIVERY-COMPLETION VOUCHER" on the Completion public voucher. Type "COST REIMBURSABLE-FINAL VOUCHER" or "INDEFINITE QUANTITY/INDEFINITE DELIVERY-FINAL VOUCHER" on the Final public voucher. Type the following certification, signed by an authorized official, on the face of the Standard Form 1034.

"I certify that all payments requested are for appropriate purposes and in accordance with the agreements set forth in the contract."

_____ _____

(Name of Official) (Title)

(13) **Quantity; Unit Price** - insert for supply contracts.

(14) **Amount** - insert the amount claimed for the period indicated in (11) above.

INVOICE PREPARATION INSTRUCTIONS
SF 1035

The information which a contractor is required to submit in its Standard Form 1035 is set forth as follows:

(1) **U.S. Department, Bureau, or Establishment** - insert the name and address of the servicing finance office.

(2) **Voucher Number** - insert the voucher number as shown on the Standard Form 1034.

(3) **Schedule Number** - leave blank.

(4) **Sheet Number** - insert the sheet number if more than one sheet is used in numerical sequence. Use as many sheets as necessary to show the information required.

(5) **Number and Date of Order** - insert payee's name and address as in the Standard Form 1034.

(6) **Articles or Services** - insert the contract number as in the Standard Form 1034.

(7) **Amount** - insert the latest estimated cost, fee (fixed, base, or award, as applicable), total contract value, and amount and type of fee payable (as applicable).

(8) **A summary of claimed current and cumulative costs and fee by major cost element.** Include the rate(s) at which indirect costs are claimed and indicate the base of each by identifying the line of costs to which each is applied. The rates invoiced should be as specified in the contract or by a rate agreement negotiated by EPA's Cost Policy and Rate Negotiation Branch.

(9) The **fee** shall be determined in accordance with instructions appearing in the contract.

NOTE: Amounts claimed on vouchers must be based on records maintained by the Contractor to show by major cost element the amounts claimed for reimbursement for each applicable contract. The records must be maintained based on the Contractor's fiscal year and should include reconciliations of any differences between the costs incurred per books and amounts claimed for reimbursement. A memorandum record reconciling the total indirect cost(s) claimed should also be maintained.

SUPPORTING SCHEDULES FOR FIXED-RATE CONTRACTS

The following backup information is required as an attachment to the invoice as shown by category of cost:

Direct Labor - identify the number of hours (by contractor labor category and total) and the total direct labor hours billed for the period of the invoice.

Subcontracts - identify the major cost elements for each subcontract.

Other Direct Costs - when the cost for an individual cost (e.g., photocopying, material and supplies, telephone usage) exceeds $1,000 per the invoice period, provide a detailed explanation for that cost category

Indirect Cost Rates - identify by cost center, the indirect cost rate, the period, and the cost base to which it is applied.

Contractor Acquired Equipment - identify by item the quantities, unit prices, and total dollars billed.

Contractor Acquired Software - identify by item the quantities, unit prices, and total dollars billed.

Travel - when travel costs exceed $2,000 per invoice period, identify by trip, the number of travelers, the duration of travel, the point of origin, destination, purpose of trip, transportation by unit price, per diem rates on daily basis and total dollars billed. Detailed reporting is not required for local travel.

The manner of breakdown, e.g., work assignment/delivery order basis with/without separate program management, contract period will be specified in the contract instructions.

NOTE: Any costs requiring advance consent by the Contracting Officer will be considered improper and will be suspended, if claimed prior to receipt of Contracting Officer consent. Include the total cost claimed for the current and cumulative-to-date periods. After the total amount claimed, provide summary dollar amounts of cumulative costs: (1) suspended as of the date of the invoice; and (2) disallowed on the contract as of the date of the invoice. The amount under (2) shall include costs originally suspended and later disallowed. Also include an explanation of the changes in cumulative costs suspended or disallowed by addressing each adjustment in terms of: voucher number, date, dollar amount, source, and reason for the adjustment. Disallowed costs should be identified in unallowable accounts in the contractor's accounting system.

RESUBMISSIONS

When an original voucher was submitted, but not paid in full because of suspended costs and after receipt of a letter of removal of suspension, resubmissions of any previously claimed

amounts which were suspended should be submitted in a separate invoice showing the original voucher number and designated with the letter "R" with the copy of the removal of suspension notice. The amounts should be shown under the appropriate cost category and include all appropriate supplemental schedules. NOTE: All disallowances must be identified as such in the accounting system through journal entries.

Voucher re-submittals may also occur as a result of: (1) a new indirect cost rate agreement; or (2) adjustments to previously billed direct cost rates due to audit resolution. Such claims should be submitted in a separate invoice or request for contractor financing payment number. They should include supplemental schedules showing the previously adjusted amounts by contract period. If the resubmission is based on a new rate agreement, a copy of the agreement should be attached. Costs must be identified by delivery order or work assignment where appropriate. If the contract is Superfund-related, voucher re-submittals shall also identify the amount claimed against each Superfund site and non-site-specific activity.

COMPLETION VOUCHERS

Submit a completion voucher when all performance provisions of the contract are physically complete, when the final report (if required) is accepted, and when all direct costs have been incurred and booked. Indirect costs may be claimed at the provisional rates, if final rates are not yet available. Contractors must identify these vouchers by typing "Completion Voucher" next to the voucher number. For contracts separately invoiced by delivery order, provide a schedule showing total costs claimed by delivery order and in total for the contract.

In addition to the completion voucher, the contractor must submit an original and two copies of EPA Form 1900-10, Contractor's Cumulative Claim and Reconciliation showing the total cumulative costs claimed under the contract.

The information which a contractor is required to submit in its EPA Form 1900-10 is set forth as follows:

(1) Contractor's Name and Address - show the name of the contractor exactly as it appears in the contract and its correct address, except when an assignment has been made by the contractor, or the right to receive payment has been restricted, as in the case of an advance account. When the right to receive payment is restricted, the type of information to be shown in this space shall be furnished by the Contracting Officer.

(2) Contract Number - insert the number of the contract under which reimbursement is claimed.

(3) First voucher number and completion voucher number.

(4) Total amount of cost claimed for each cost element category through the completion voucher.

(5) Total Fee awarded.

(6) Amount of indirect costs calculated using negotiated final indirect cost rate(s) and/or provisional rate(s) as specified in the contract, if final rate(s) are not yet negotiated for any fiscal period.

(7) Fiscal year.

(8) Indirect cost center.

(9) Appropriate basis for allocation.

(10) Negotiated final indirect cost rate(s) or provisional indirect cost rate(s).

(11) Signature.

(12) Official title.

(13) Date.

FINAL VOUCHER AND CLOSING DOCUMENTS

After completion of the final audit and all suspensions and/or audit exceptions have been resolved as to the final allowable costs and fee, including establishment of final indirect cost rate(s) for all periods the contractor shall prepare a final voucher including any adjustments to vouchered costs necessitated by the final settlement of the contract price. Contractors must identify these vouchers by typing "Final Voucher" next to the voucher number. For contracts separately invoiced by delivery order, provide a schedule showing final total costs claimed by delivery order and in total for the contract. The contractor shall also provide an original and two copies of an updated EPA Form 1900-10, Contractors Cumulative Claim and Reconciliation, showing the total negotiated, cumulative costs for the contract. Indirect costs shall be included at the final negotiated rates.

In addition to the final voucher, the contractor must submit an original and two copies of the Contractor's Release; Assignee's Release, if applicable; the Contractor's Assignment of Refunds, Rebates, Credits and other Amounts; the Assignee's Assignment of Refunds, Rebates, Credits and other Amounts, if applicable; and the Contractor's Affidavit of Waiver of Lien, when required by the contract.

Attachment 9 –
Instructions for Performing the Annual Allocation of Non-Site-Specific Costs

INSTRUCTIONS FOR PERFORMING THE ANNUAL ALLOCATION OF NON-SITE-SPECIFIC COSTS

This attachment and supporting documentation can be found at: http://www.epa.gov/ocfo/finservices/super_fin_info.htm.

The attachment found above shall be referenced when preparing reports and/or invoices that constitute Superfund site-specific and non-site-specific cost.