NOTE:

THE LOCATION OF ALL UTILITIES INDICATED ON THE PLANS ARE TAKEN FROM EXISTING PUBLIC RECORDS. THE EXACT LOCATION AND ELEVATION OF ALL PUBLIC UTILITIES MUST BE DETERMINED BY THE CONTRACTOR. IT SHALL BE THE DUTY OF THE CONTRACTOR TO ASCERTAIN WHETHER ANY ADDITIONAL FACILITIES OTHER THAN THOSE SHOWN ON THE PLANS MAY BE PRESENT.

ROAD CLOSURE NOTES:

1. SHOWN SIGN SIZES ARE 'CONVENTIONAL' MUTCD SIZES.
2. OTHER SIGN SIZES SHALL BE APPROVED BY THE CITY.
3. PLAN IS BASED ON 2016 CITY PROJECT BY SHIVE–HATTERY NOT BEING CONSTRUCTED AT SAME TIME. THE CITY SHALL PROVIDE ADDITIONAL SIGNAGE AND CONTROLLING UNDER THEIR PROJECT.
4. COORDINATE CONSTRUCTION WITH CITY PROJECT.

100 0 100 200 300

Scale: 1" = 100'

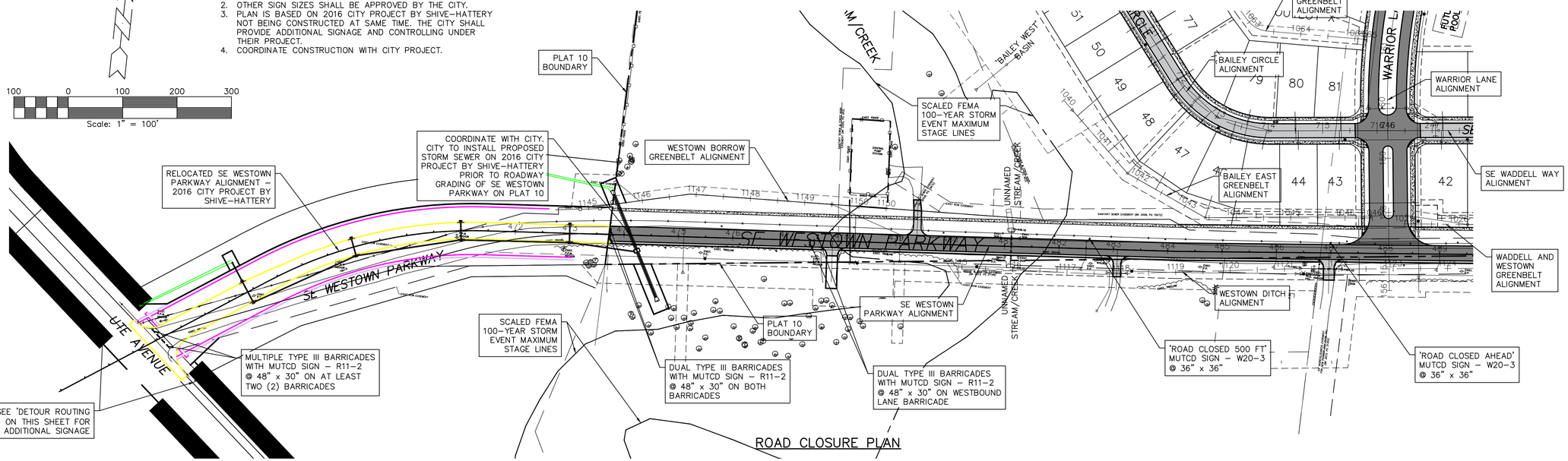

ROAD CLOSURE PLAN

DETOUR MAP NUMBER AND SIGNAGE INFORMATION

1	DETOUR AHEAD / 312TH PL SE WESTOWN PKWY	MUTCD SIGN – W20–2 36" x 36" BLACK ON ORANGE MUTCD SIGN – SPECIAL 5" HIGH LETTERING ½" BORDER BLACK ON ORANGE
2	ROAD CLOSED 500FT	MUTCD SIGN – W20–3 36" x 36" BLACK ON ORANGE
3	DETOUR → / 312TH PL SE WESTOWN PKWY	MUTCD SIGN – M4–9R 30" x 24" BLACK ON ORANGE MUTCD SIGN – SPECIAL 5" HIGH LETTERING ½" BORDER BLACK ON ORANGE
4	DETOUR ← / 312TH PL SE WESTOWN PKWY	MUTCD SIGN – M4–9L 30" x 24" BLACK ON ORANGE MUTCD SIGN – SPECIAL 5" HIGH LETTERING ½" BORDER BLACK ON ORANGE
5	DETOUR ↑ / 312TH PL SE WESTOWN PKWY	MUTCD SIGN – M4–9S 30" x 30" (SPECIAL) BLACK ON ORANGE MUTCD SIGN – SPECIAL 5" HIGH LETTERING ½" BORDER BLACK ON ORANGE
6	END DETOUR	MUTCD SIGN – M4–8a 24" x 18" BLACK ON ORANGE

OPTIONAL DETOUR SIGNAGE

MUTCD SIGN – W1–6 24" x 12" BLACK ON ORANGE	DETOUR ←	MUTCD SIGN – M4–8 24" x 12" BLACK ON ORANGE
MUTCD SIGN – W1–6 24" x 12" BLACK ON ORANGE	DETOUR →	MUTCD SIGN – M4–8 24" x 12" BLACK ON ORANGE
MUTCD SIGN – W1–6 24" x 12" BLACK ON ORANGE	DETOUR ↑	MUTCD SIGN – M4–8 24" x 12" BLACK ON ORANGE
MUTCD SIGN – M4–8 24" x 12" BLACK ON ORANGE	END DETOUR	MUTCD SIGN – M4–8b 24" x 12" BLACK ON ORANGE

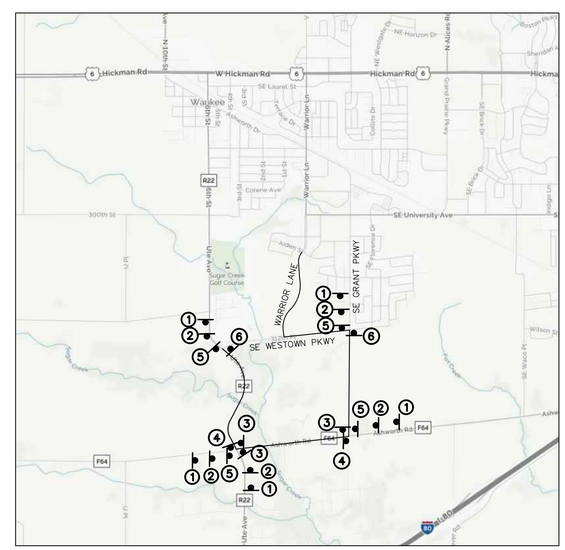

DETOUR ROUTING MAP

NOT TO SCALE

DETOUR NOTES:

1. SEE 'GENERAL NOTES' ON SHEET 2 FOR ADDITIONAL INFORMATION.
2. SHOWN SIGN SIZES ARE 'CONVENTIONAL' MUTCD SIZES.
3. OTHER SIGN SIZES SHALL BE APPROVED BY THE CITY.
4. PER MUTCD, PROVIDE 500 FOOT SPACINGS BETWEEN SIGN ASSEMBLIES #1 AND #2; AND BETWEEN SIGN ASSEMBLIES #2 AND #3 OR #5 – NEAR INTERSECTION OF SE WESTOWN PARKWAY AND UTE AVENUE.
5. THE CONTRACTOR(S) SHALL ADD, MODIFY, AND/OR REMOVE SIGNAGE AS DIRECTED BY THE CITY, THE COUNTY, AND/OR IDOT.
6. THE CONTRACTOR(S) SHALL ADJUST DETOUR ROUTING AS GLYNN VILLAGE PLAT 10 PROJECT PROGRESSES.
7. PLAN IS BASED ON 2016 CITY PROJECT BY SHIVE–HATTERY NOT BEING CONSTRUCTED AT SAME TIME. THE CITY SHALL PROVIDE ADDITIONAL AND CONTROLLING MAPPING AND SIGNAGE UNDER THEIR PROJECT.
8. COORDINATE CONSTRUCTION WITH CITY PROJECT.

GLYNN VILLAGE PLAT 10 - ROAD CLOSURE AND DETOUR DETAILS

NO.	REVISION	DATE	BY	FOR:

LOCATION:

SCALE: AS NOTED | DESIGNED BY: JRK | DRAWN BY: PJV
DWG: 15-013-RD_CLOSURE.dwg | CHECKED BY: DJS | DATE: 02/24/2016
FIELD BOOK: | SHEET 86 OF 100 | FILE NO.: 15-013

ERG
Engineering Resource Group, Inc.
Engineers and Surveyors
2413 GRAND AVENUE
DES MOINES, IOWA 50312
(515) 288-4823

15-013

J:\2015 Proj\15-013\DESIGN\15-013-RD_CLOSURE.dwg, 5/5/2016 10:28:51 AM, Jay

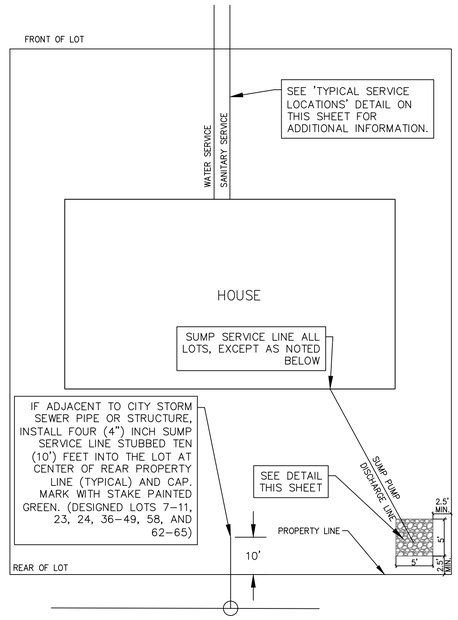

TYPICAL LOT SUMP SERVICE PLAN DETAIL

NOT TO SCALE

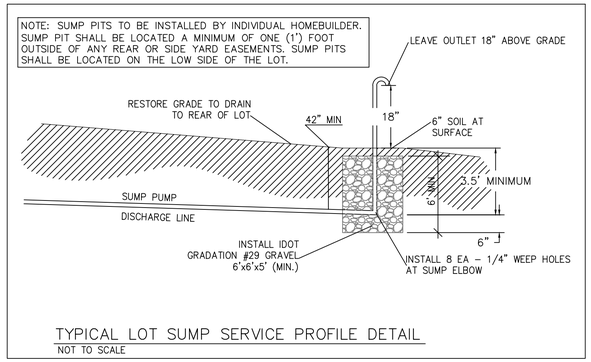

TYPICAL LOT SUMP SERVICE PROFILE DETAIL

NOT TO SCALE

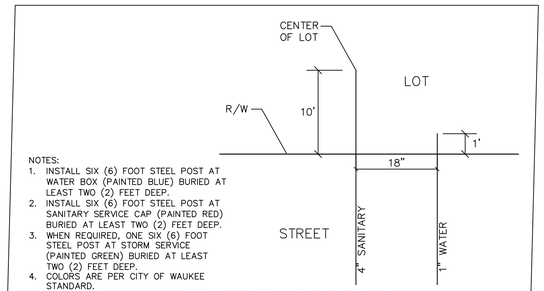

NOTES:
1. INSTALL SIX (6) FOOT STEEL POST AT WATER BOX (PAINTED BLUE) BURIED AT LEAST TWO (2) FEET DEEP.
2. INSTALL SIX (6) FOOT STEEL POST AT SANITARY SERVICE CAP (PAINTED RED) BURIED AT LEAST TWO (2) FEET DEEP.
3. WHEN REQUIRED, ONE SIX (6) FOOT STEEL POST AT STORM SERVICE (PAINTED GREEN) BURIED AT LEAST TWO (2) FEET DEEP.
4. COLORS ARE PER CITY OF WAUKEE STANDARD.

TYPICAL SERVICE LOCATIONS

NOT TO SCALE

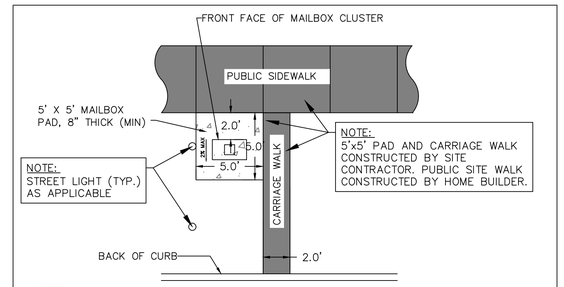

NOTES:
1. Cluster Mailbox to be located on the no parking/street light side of street.
2. Do not locate at intersection.
3. Locate near shared property line per approved plan.
4. Determine sidewalk side of mailbox pad elevation assuming constant 4% slope from back of curb to sidewalk side of mailbox pad. Resulting slope from back of curb to street side of mailbox pad will be greater than 4%. For example, for a 29' wide pavement with a 60' wide R.O.W. and a 2% mailbox pad cross slope, the resulting slope from the back of curb to the street side of mailbox pad is 6.2%.

CITY OF WAUKEE
CLUSTER MAILBOX PAD DETAIL
STD.DWG.NO.28

NOTES:
1. BUILDING NAMES, CONFIGURATIONS, AND LAYOUT PATTERN ALONG WARRIOR LANE ARE SUBJECT TO CHANGE.
2. NOT TO SCALE.
3. FIGURE IS TYPICAL AND DOES NOT SHOW ANY SPECIFIC AREA IN DETAIL.
4. 7–FEET GROUND COVER BUFFER WILL GENERALLY CONTAIN A BERM AND TREES. THE PERMIT TREE PLANTINGS PROVIDED IN CITY DESIGNATED 25–FEET BUFFER SHALL CONSIST OF: 1 OVERSTORY, 2 EVERGREENS AND 2 ORNAMENTAL TREES FOR EVERY 50–FEET OF BUFFER LENGTH FOR TRANSITION FROM R–4 TO R–1 ZONING. INITIAL TREES SIZES SHALL ALL BE PROVIDED IN ACCORDANCE WITH THE CITY LANDSCAPE REQUIREMENTS. IN ACCORDANCE WITH CITY CODE, PLANTINGS AND BERM GRADING SHALL BE SHIFTED OR ADJUSTED TO AVOID BLOCKING AND ALLOWING MAINTENANCE ON DRAINAGE WAYS, MANHOLES, AND OTHER CITY UTILITIES/FACILITIES.
5. PROPOSED PLAT 10 WARRIOR LANE MEDIAN GROUND COVER AND VEGETATION TO MATCH EXISTING GLYNN VILLAGE WARRIOR LANE MEDIAN GROUND COVER AND VEGETATION TO THE NORTH. SEE PREVIOUSLY APPROVED PLATS 1–9, INCLUSIVE, CONSTRUCTION PLANS FOR ACTUAL LAYOUT.
6. FUTURE ROWHOUSE DEVELOPMENT SIDEWALK AND TRAIL WILL BE CONSTRUCTED WITH ROW HOUSE UNITS AND ARE SUBJECT TO ADJUSTMENT WITH FUTURE PLAT.

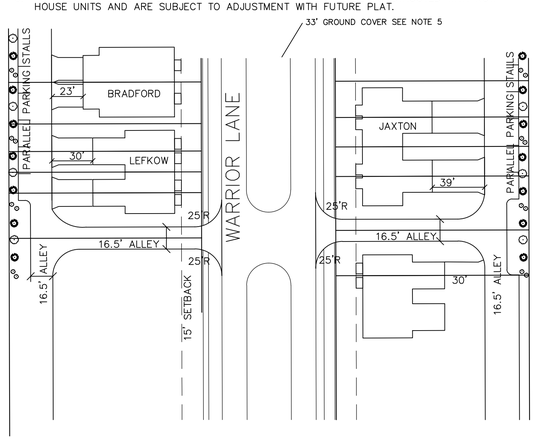

TYPICAL WARRIOR LANE LAYOUT

NTS

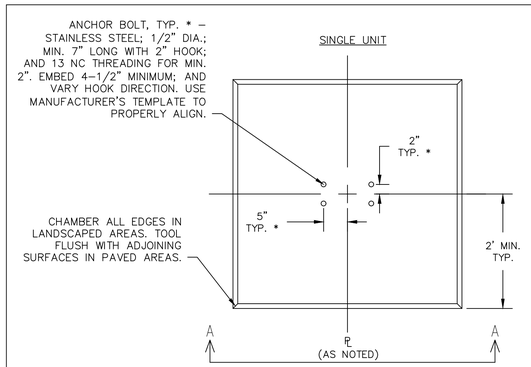

CLUSTER MAILBOX (CMB) NOTES:
1. CMB SHALL BE PROVIDED AT LOCATION(S) AS NOTED IN 'CMB TABLE A' AND MOUNTED ON PCC PAD WITH MINIMUM REQUIRED NUMBER OF UNITS, PLUS ASSOCIATED PARCEL BOX(S) – MINIMUM OF TWO (2).
2. CMB SHALL BE LOCATED ON THE SIDE OF THE LOT (PROPERTY) LINE WITH A HIGHER ELEVATION, UNLESS OTHERWISE NOTED. DOORS OF CMB SHALL FACE SOUTH OR EAST TO LIMIT IMPACTS OF SNOW AND ICE DURING WINTER WHERE POSSIBLE. MIRROR OR SHIFT TYPICAL LAYOUT AS REQUIRED.
3. ADJUST SLOPE OF ADJACENT FIVE (5) FOOT SIDEWALK PARALLEL TO ROADWAY AT ALL MAILBOX LOCATIONS TO PROVIDE AN ADA COMPLIANT TURNING AREA AND CMB PAD AT 1.5 PERCENT DESIGN SLOPE IN ALL DIRECTIONS.
4. DEVELOPER SHALL BE RESPONSIBLE FOR THE INSTALLATION AND ALL CONSTRUCTION REQUIRED FOR PROPER CMB INSTALLATION.
5. IF DISTANCE FROM BACK OF CURB TO MAILBOX PAD IS 18 INCHES OR LESS, THEN INCREASE MAILBOX PAD TO BACK OF CURB.
6. THE LOCATION AND NUMBER OF CLUSTER MAILBOX UNITS WILL BE COORDINATED AND FINALIZED WITH THE CITY AND USPS.
7. PER THE CITY, ALL CMU'S WILL BE ORDERED AND SUPPLIED BY THE USPS; AND INSTALLED AT CITY DEFINED LOCATIONS.

CMB TABLE A:

Shared Lot Line	Min. No. Units
68/69	SEE NOTE 7
73/74	SEE NOTE 7
79/80	SEE NOTE 7
83/84	SEE NOTE 7
89/90	SEE NOTE 7
96/97	SEE NOTE 7
101/102	SEE NOTE 7
106/107	SEE NOTE 7
123/124	SEE NOTE 7
129/130	SEE NOTE 7
135/136	SEE NOTE 7

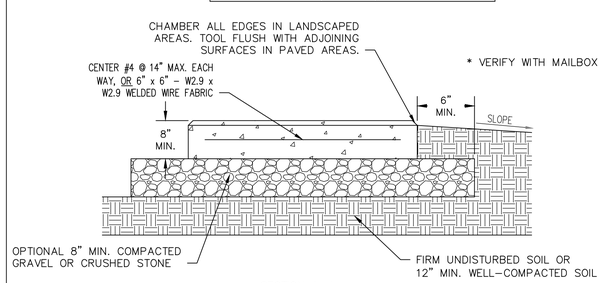

SECTION A–A

* VERIFY WITH MAILBOX CLUSTER MANUFACTURER.

NOTES:
1. ALL REINFORCING STEEL SHALL CONFORM TO ASTM A615 GRADE 60; MINIMUM 3" CLEARANCE; AND BE DEFORMED, UNLESS NOTED OTHERWISE.
2. CONCRETE SHALL BE C–4 MIX WITH MINIMUM 4,000 PSI @ 28 DAYS; 4–6% AIR ENTRAINMENT; AND 3–1/2 TO 4–1/2 INCHES OF SLUMP.
3. PROVIDE SEALED 1/2" EXPANSION/ISOLATION JOINT ALONG ADJOINING PAVED SURFACES, OR AS DIRECTED.
4. BROOM FINISH CONCRETE, TYPICAL; OR MATCH ADJOINING PAVED SURFACES.
5. SEE PLANS FOR ADDITIONAL GRADING INFORMATION.

MAILBOX CLUSTER DETAIL

NTS

GLYNN VILLAGE PLAT 10 - DETAILS I

NO.	REVISION	DATE	BY	FOR:

LOCATION:

SCALE: AS NOTED	DESIGNED BY: JRK	DRAWN BY: PJV	
DWG: 15–013–DTL–1.dwg	CHECKED BY: DJS	DATE: 02/24/2016	
FIELD BOOK:	SHEET 87 OF 100	FILE NO.: 15–013	

ERG
Engineering Resource Group, Inc.
Engineers and Surveyors
2413 GRAND AVENUE
DES MOINES, IOWA 50312
(515) 288–4823

15–013

J:\2015 Proj\15-013\DESIGN\15-013-DTL-1.dwg, 5/5/2016 10:29:10 AM, Jay

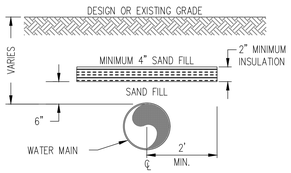

SHALLOW BURY CONDITIONS
NO SCALE

MINIMUM WIDTH OF INSULATION BETWEEN WATER MAIN AND STORM SEWER

STORM SEWER	WATER LINE	
	1" TO 4"	6" TO 12"
12" TO 48"	2'	4'
54" & LARGER	4'	8'

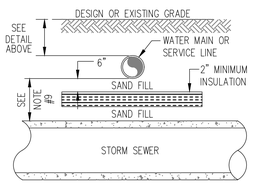

STORM SEWER CROSSING BELOW
NO SCALE

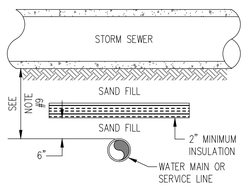

STORM SEWER CROSSING ABOVE
NO SCALE

NOTES:
1. INSULATION SHALL BE CENTERED ON THE PIPE.
2. RIGID, EXTRUDED POLYSTYRENE BOARD INSULATION, CLOSED CELL (DOW CHEMICAL) OR APPROVED EQUAL.
3. THERMAL RESISTANCE (R): 5.0.
4. MINIMUM THICKNESS: 2 INCHES.
5. BOARD SIZE: 48"x96".
6. COMPRESSIVE STRENGTH: MINIMUM 25 psi.
7. WATER ABSORPTION IN ACCORDANCE WITH ANSI/ASTM D2842: 0.1 PERCENT BY VOLUME, MAXIMUM.
8. EDGES: SQUARE.
9. ALL STORM SEWER CONFLICTS OR INTERSECTIONS SHALL BE INSULATED AS APPROVED BY FIELD ENGINEER TO EQUATE TO 7 FEET OF MINIMUM COVER (1 INCH CLOSED CELL INSULATION = 1 FOOT OF SOIL).
10. INSULATION LENGTH ALONG WATER LINE SHALL BE A MINIMUM OF 4 FEET GREATER THAN THE OUTSIDE DIAMETER OF THE STORM SEWER PIPE.

INSULATION DETAIL
N.T.S.

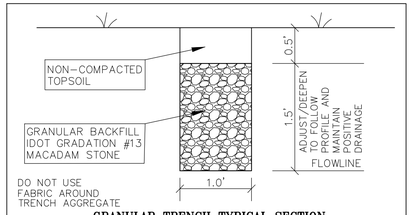

GRANULAR TRENCH TYPICAL SECTION
NOT TO SCALE

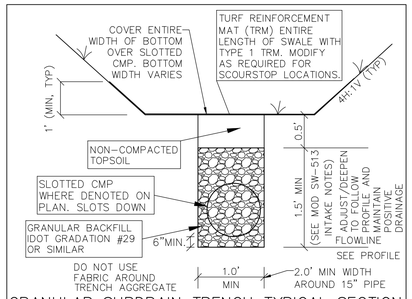

GRANULAR SUBDRAIN TRENCH TYPICAL SECTION
NOT TO SCALE

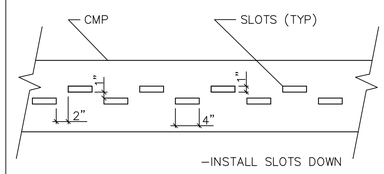

SLOTTED PIPE DETAIL
NOT TO SCALE

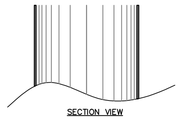

SECTION VIEW

NOTES:
TRIM CLEAN OUT RISER PIPE TO FINAL GRADE ELEVATION JUST PRIOR TO PERMANENT SURFACE RESTORATION. DRILL ¼ INCH HOLES THROUGH PIPE AND SIDES OF CAP. USE ONE 1/4-INCH DIAM. SMOOTH STEEL DOWEL BAR THROUGH HOLES IN PIPE AND CAP TO MECHANICAL FASTEN CAP TO PIPE.

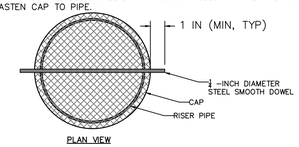

PLAN VIEW

CMP CLEANOUT
NOT TO SCALE

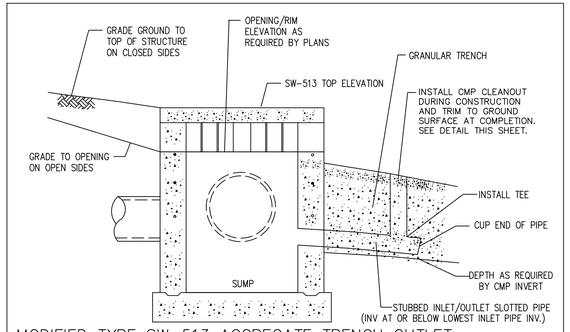

MODIFIED TYPE SW-513 AGGREGATE TRENCH OUTLET
(F.K.A. AREA TYPE "M-G" OUTLET)
NOT TO SCALE

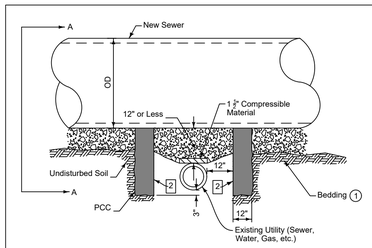

Install pipe support for all new sewers 12 inches in diameter or larger when clearance between bottom of new sewer and top of existing line is 12 inches or less.

1. Comply with Figure 3010.101.
2. Form interior surface of footings. Keep the 12 inch utility clear zone free of concrete.

OD = Outside pipe diameter

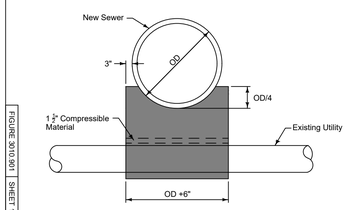

SECTION A-A

REVISION	
1	10-21-14

3010.901
SHEET 1 of 1

SEWER PIPE SUPPORT OVER EXISTING UTILITY LINE

FIGURE 3010.901 SHEET 1 OF 1

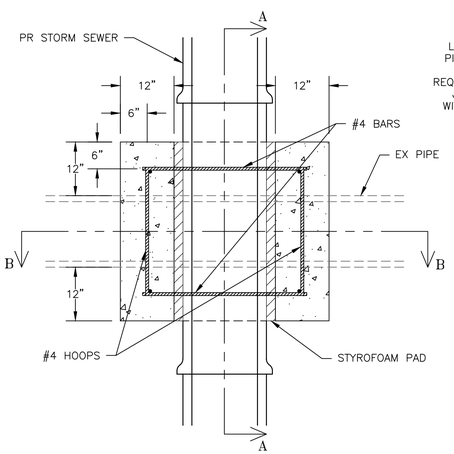

PLAN
NOT TO SCALE

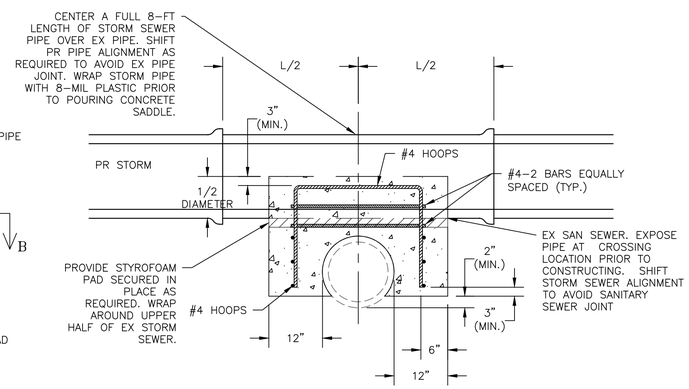

SECTION A-A
NOT TO SCALE

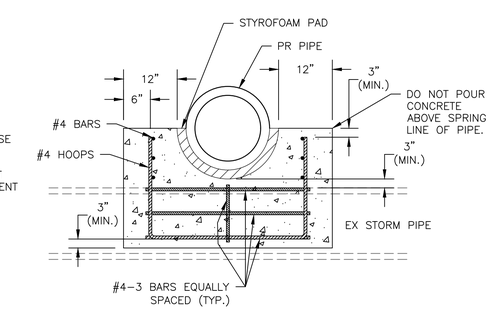

SECTION B-B
NOT TO SCALE

PIPE CROSSING – CONCRETE
NOT TO SCALE

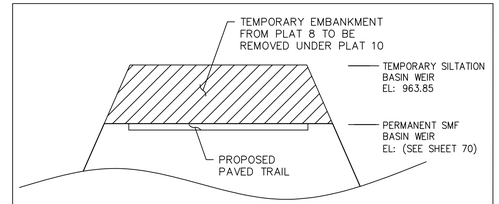

SMF 'EAST/8E' PLAT 8
WEIR EMBANKMENT SECTION
NOT TO SCALE

NOTES:
1. SEE SWPPP FOR ADDITIONAL INFORMATION.
2. CONSTRUCTION SEQUENCE
   2.1. ADD NEW OUTFALL PIPING AND STRUCTURES.
   2.2. RESHAPE/MODIFY EXISTING DETENTATION BASIN TO FINAL CONDITIONS.
   2.3. REMOVE TEMPORARY EMBANKMENT TO FINAL GRADE.
   2.4. CONSTRUCT AND PAVE TRAIL.
   2.5. INSTALL SLOPE TRM WHEN CONVERTING SILTATION BASIN TO SMF.
3. MINIMUM WEIR LENGTH AT EACH ELEVATION – 120'
4. COVER UNPAVED EMBANKMENT WITH TRM.

GLYNN VILLAGE PLAT 10 - DETAILS 2

LOCATION:	SCALE: AS NOTED	DESIGNED BY: JRK	DRAWN BY: PJV
	DWG: 15-013-DTL-1.dwg	CHECKED BY: DJS	DATE: 02/24/2016
	FIELD BOOK:	SHEET 88 OF 100	FILE NO.: 15-013

NO.	REVISION	DATE	BY	FOR:

ERG
Engineering Resource Group, Inc.
Engineers and Surveyors
2413 GRAND AVENUE
DES MOINES, IOWA 50312
(515) 288-4823

15-013

J:\2015 Proj\15-013\DESIGN\15-013-DTL-1.dwg, 5/5/2016 10:29:17 AM, Jay

① Extend tracer wire up fire hydrant barrel to internal terminals of tracer wire station and back down. Refer to WM-201 for details of fire hydrant assembly.

② Clamp tracer wire to ground rod at system termination points.

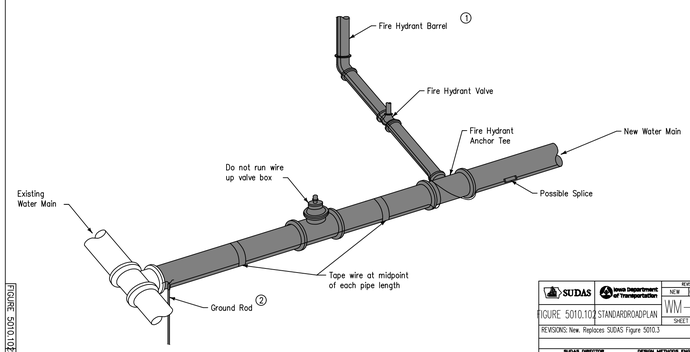

TYPICAL INSTALLATION

SUDAS	Iowa Department of Transportation	REVISION NEW 04-21-09
FIGURE 5010.102	STANDARDROADPLAN	WM-102 SHEET 1 of 1
REVISIONS: New. Replaces SUDAS Figure 5010.3		
SUDAS DIRECTOR	DESIGN METHODS ENGINEER	

TRACER SYSTEM

FIGURE 5010.102 SHEET 1 OF 1

TYPE A
Two-piece fixed casting

TYPE C
Two-piece fixed casting with bolt-down cover ②

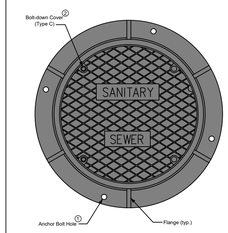

PLAN

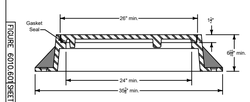

TYPICAL SECTION

TYPE B
Three-piece floating casting

TYPE D
Three-piece floating casting with bolt-down cover ②

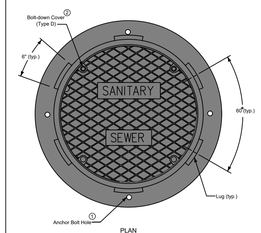

PLAN

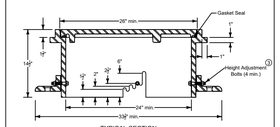

TYPICAL SECTION

Frame Notes:
Size and spacing of lugs and flanges may vary.

Cover Notes:
Roughness pattern and text style may vary.
Minimum one concealed pickhole.

① When the contract documents require the frame to be attached to the structure, drill four 3/4" diameter holes or slots, equally spaced around frame.

② If specified, furnish bolt down frame and cover with four 3/4" x 2 1/2" stainless steel, hex head, recessed cap screws. Secure cover with screws, washers, and rubber gasket seals.

③ Set casting at proper grade using one of the adjustment slots. Remove bolts upon completion of paving.

		REVISION 3 04-21-15
FIGURE 6010.601	STANDARDROADPLAN	SW-601 SHEET 1 of 1
REVISIONS: Minor Revision to depict adjustability of TYPE B and TYPE D casting. Modified circle note 3.		
SUDAS DIRECTOR	DESIGN METHODS ENGINEER	

CASTINGS FOR SANITARY SEWER MANHOLES

FIGURE 6010.601 SHEET 1 OF 1

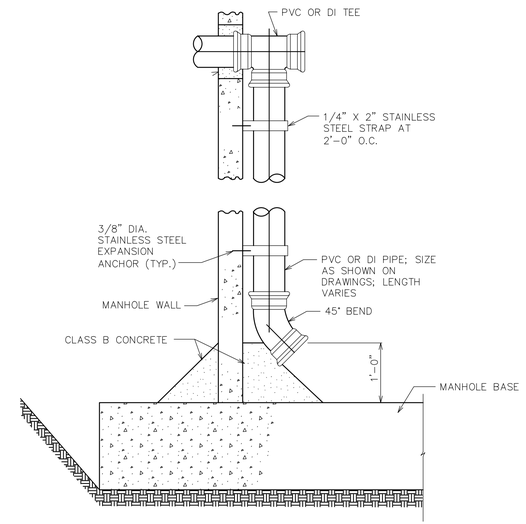

CITY OF WAUKEE

INSIDE DROP CONNECTION

STD.DWG.NO.14

① Standard duty casting complying with AASHTO M 306. Mark lid with "Sanitary" or "Sanitary C.O."

② Do not allow casting to bear on top of riser pipe.

③ 6-inch PVC Service Pipe

④ Threaded PVC cap or iron body ferrule with brass screw plug

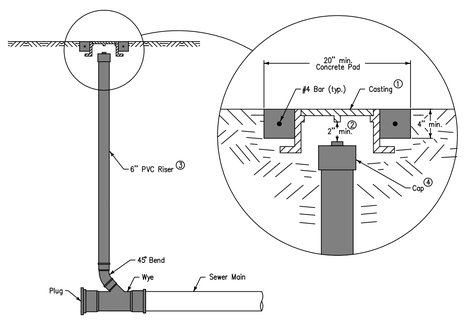

CLEANOUT

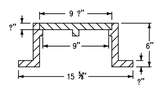

CASTING ①
(Dimensions are nominal)

SUDAS	Iowa Department of Transportation	REVISION NEW 10-20-09
FIGURE 4010.203	STANDARDROADPLAN	SW-203 SHEET 1 of 1
REVISIONS: New.		
SUDAS DIRECTOR	DESIGN METHODS ENGINEER	

SANITARY SEWER CLEANOUT

FIGURE 4010.203 SHEET 1 OF 1

① For additional configurations, maintain a minimum of 12 inches of concrete between vertical edges of pipe openings.

② 12 inch minimum riser height above all pipe openings.

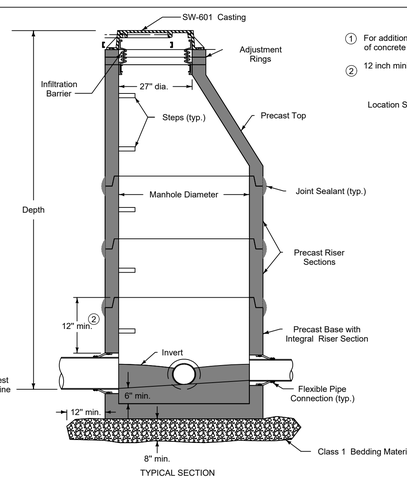

TYPICAL SECTION

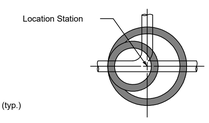

PLAN

Manhole Diameter (inches)	Maximum Pipe Diameter (inches) for 2 Pipes ① At 180° Separation	At 90° Separation
48	24	18
60	36	24
72	42	30
84	48	36
96	60	42

		REVISION 1 10-21-14
FIGURE 6010.301	STANDARDROADPLAN	SW-301 SHEET 1 of 1
REVISIONS: Changed "Chimney Seal" to "Infiltration Barrier".		
SUDAS DIRECTOR	DESIGN METHODS ENGINEER	

CIRCULAR SANITARY SEWER MANHOLE

FIGURE 6010.301 SHEET 1 OF 1

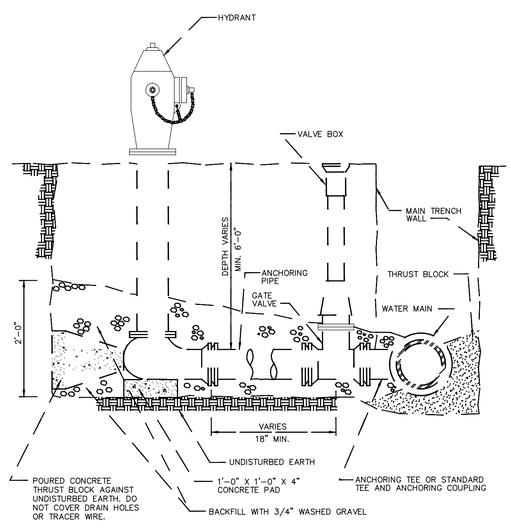

SEE 'GENERAL NOTES' ON SHEET 2 FOR LOCATION TO SIDEWALKS.

NOTES

1. MINIMUM SIZE FOR PIPING, VALVES AND FITTINGS FROM WATER MAIN TO HYDRANT INLET: 6".
2. PROVIDE TRACER WIRE AND TRACER WIRE STATION.
3. WRAP HYDRANT, PIPE AND FITTINGS WITH POLYETHYLENE ENCASEMENT.

CITY OF WAUKEE

HYDRANT

STD.DWG.NO.34

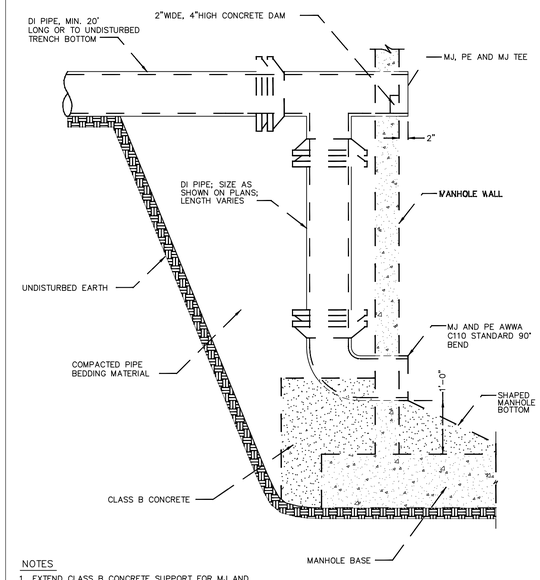

NOTES

1. EXTEND CLASS B CONCRETE SUPPORT FOR MJ AND PE QUARTER BEND 8" ALL SIDES.
2. USE ANSI A21.50 DUCTILE IRON PIPE; MINIMUM THICKNESS CLASS 52; COAT WITH STANDARD COATING INSIDE AND OUT.
3. USE ANSI A21.10 MECHANICAL JOINT FITTINGS; 150 PSI PRESSURE RATING. COAT WITH STANDARD COATING INSIDE AND OUT.
4. GROUT PIPE IN BLOCKOUT WITH NON-SHRINK GROUT IF PRECAST MANHOLE SECTION IS USED.
5. DROP CONNECTIONS NOT PERMITTED ON 18" OR LARGER SEWER PIPE.

CITY OF WAUKEE

OUTSIDE DROP CONNECTION

STD.DWG.NO.13

Use ductile iron pipe with restrained mechanical joints for fire hydrant assembly and anchor tee.

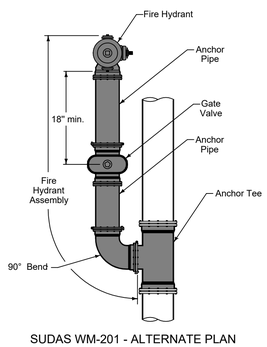

SUDAS WM-201 - ALTERNATE PLAN

GLYNN VILLAGE PLAT 10 - DETAILS 3

NO.	REVISION	DATE	BY	FOR:

SCALE: AS NOTED	DESIGNED BY: JRK	DRAWN BY: PJV	
DWG: 15-013-DTL-1.dwg	CHECKED BY: DJS	DATE: 02/24/2016	
FIELD BOOK:	SHEET 89 OF 100	FILE NO.: 15-013	

LOCATION:

ERG
Engineering Resource Group, Inc.
Engineers and Surveyors
2413 GRAND AVENUE
DES MOINES, IOWA 50312
(515) 288-4823

15-013

J:\2015 Proj\15-013\DESIGN\15-013-DTL-1.dwg, 5/5/2016 10:29:22 AM, Jay

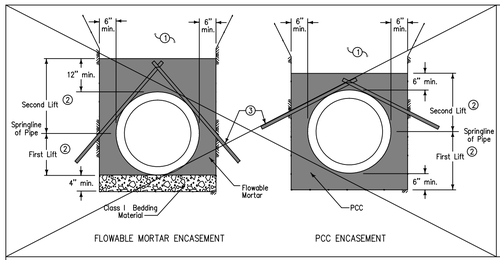

1. Place remainder of bedding and backfill material as specified in the contract documents.
2. ~~Place encasement material in two lifts, or as required to prevent pipe flotation. Allow previous lift to reach initial set prior to placing subsequent lifts.~~
3. ~~Restrain pipe as necessary to prevent flotation.~~
4. When specified in the contract documents, install waterstops at a nominal spacing of 800 feet or at locations as specified by the Engineer.

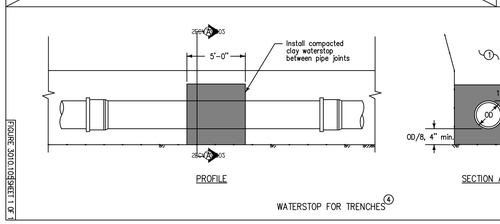

SUDAS | Iowa Department of Transportation | REVISION 1 10-20-09 | SW-105 | FIGURE 3010.105 STANDARD ROAD PLAN | SHEET 1 of 1
REVISIONS: Added waterstop information from SUDAS figure.
SUDAS DIRECTOR | DESIGN METHODS ENGINEER
MISCELLANEOUS PIPE BEDDING

FIGURE 3010.105 (SHEET 1 OF 1)

NOTE:
1. PER CITY, INSTALL CLAY WATERSTOP AT CENTER OF FIRST PIPE SECTION UPSTREAM OF NOTED FES.

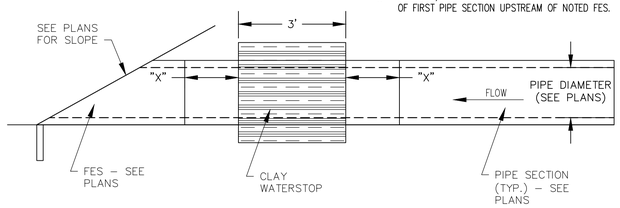

CLAY WATERSTOP AT FES
NOT TO SCALE

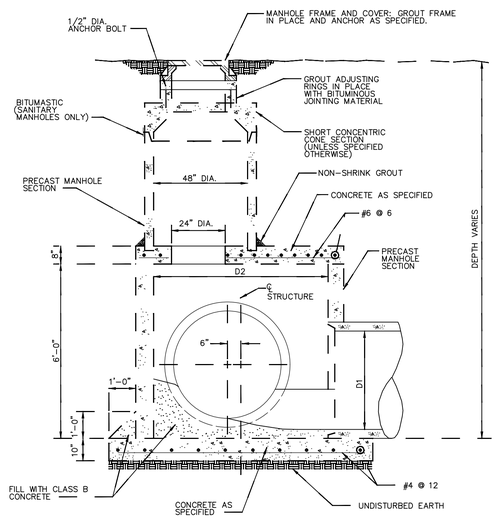

NOTES

1. SLOPE CONCRETE FILL 1/4 D1 MINIMUM TO INVERT OF OUTLET PIPE.
2. FOR PIPES LARGER THAN 48" USE TEE SECTION MANHOLE. USE CURVED PIPE IF SEWER CHANGES DIRECTION.
3. PROVIDE MANHOLE STEPS FOR SANITARY MANHOLE ONLY. IF SPECIFIED.
4. SET MANHOLE COVER FLUSH WITH GROUND UNLESS SHOWN OR SPECIFIED OTHERWISE.
5. FOR SANITARY SEWERS, PROVIDE JOINT IN ALL PIPES WITHIN 2' OF MANHOLE WALL OR FLEXIBLE GASKET IN MANHOLE WALL.
6. IF JOINTS ARE PROVIDED FOR SANITARY SEWERS OR MANHOLE IS USED FOR STORM SEWER, GROUT PIPE IN BLOCKOUT WITH NON-SHRINK GROUT.
7. PROVIDE CHIMNEY SEAL ALL SANITARY MANHOLES.

DIAMETER D2	MAXIMUM D1
60"	36"
66"	42"
78"	48"

CITY OF WAUKEE
SPECIAL MANHOLE
STD.DWG.NO.11

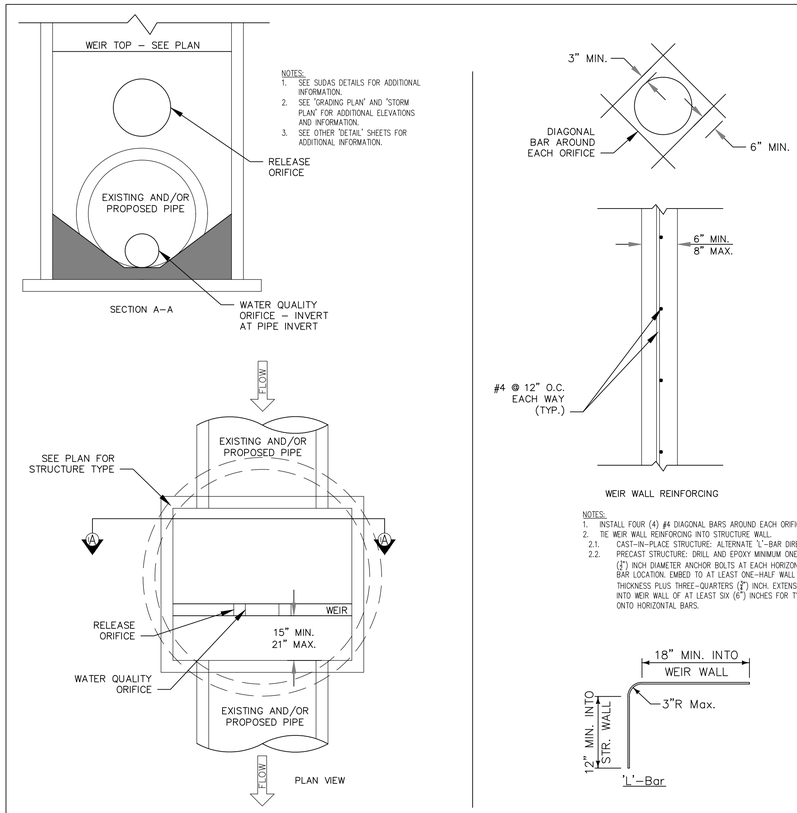

NOTES:
1. SEE SUDAS DETAILS FOR ADDITIONAL INFORMATION.
2. SEE "GRADING PLAN" AND "STORM PLAN" FOR ADDITIONAL ELEVATIONS AND INFORMATION.
3. SEE OTHER "DETAIL" SHEETS FOR ADDITIONAL INFORMATION.

NOTES:
1. INSTALL FOUR (4) #4 DIAGONAL BARS AROUND EACH ORIFICE.
2. TIE WEIR WALL REINFORCING INTO STRUCTURE WALL.
   2.1. CAST-IN-PLACE STRUCTURE: ALTERNATE 'L'-BAR DIRECTION.
   2.2. PRECAST STRUCTURE: DRILL AND EPOXY MINIMUM ONE-HALF (½") INCH DIAMETER ANCHOR BOLTS AT EACH HORIZONTAL BAR LOCATION. EMBED TO AT LEAST ONE-HALF WALL THICKNESS PLUS THREE-QUARTERS (¾") INCH. EXTENSION INTO WEIR WALL OF AT LEAST SIX (6") INCHES FOR TYING ONTO HORIZONTAL BARS.

CONTROL STRUCTURE MANHOLE WITH ORIFICE AND WEIR ON EXISTING AND/OR PROPOSED PIPE
NOT TO SCALE

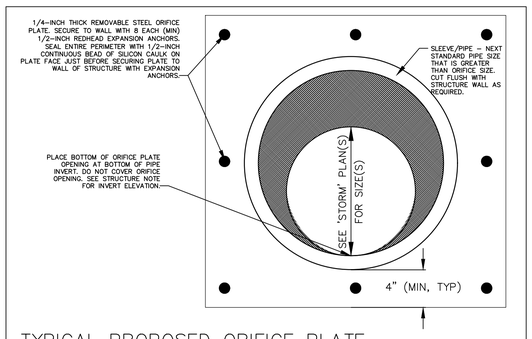

TYPICAL PROPOSED ORIFICE PLATE DETAIL AT BASIN(S)
NOT TO SCALE

GLYNN VILLAGE PLAT 10 - DETAILS 4

NO.	REVISION	DATE	BY	FOR:

LOCATION:

SCALE: AS NOTED	DESIGNED BY: JRK	DRAWN BY: PJV	
DWG: 15-013-DTL-1.dwg	CHECKED BY: DJS	DATE: 02/24/2016	
FIELD BOOK:	SHEET 90 OF 100	FILE NO.: 15-013	

ERG
Engineering Resource Group, Inc.
Engineers and Surveyors
2413 GRAND AVENUE
DES MOINES, IOWA 50312
(515) 288-4823

15-013

J:\2015 Proj\15-013\DESIGN\15-013-DTL-1.dwg, 5/5/2016 10:29:27 AM, Jay

WITH PLAT 8 TEMPORARY EMBANKMENT ON 'EAST/8E' BASIN

1. Barrel length and diameter as specified in the contract documents.
2. Riser pipe and base/dewatering device: See Figure 9040.115.
3. Anti-vortex device: See Figure 9040.116.

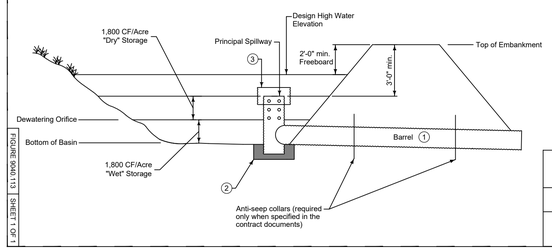

FIGURE 9040.113 | SHEET 1 OF 1

REVISION	
2	10-21-14

9040.113
SHEET 1 of 1

SEDIMENT BASIN WITHOUT EMERGENCY SPILLWAY

AFTER REMOVAL OF PLAT 8 TEMPORARY EMBANKMENT ON 'EAST/8E' BASIN AND FOR 'BAILEY WEST' BASIN

1. Barrel length and diameter as specified in the contract documents.
2. Riser pipe and base/dewatering device: See Figure 9040.115.
3. Anti-vortex device: See Figure 9040.116.

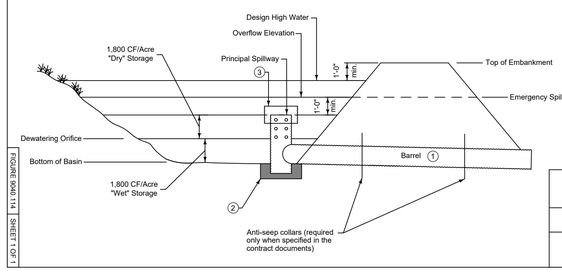

FIGURE 9040.114 | SHEET 1 OF 1

REVISION	
2	10-21-14

9040.114
SHEET 1 of 1

SEDIMENT BASIN WITH EMERGENCY SPILLWAY

Elevations and dimensions not given are as specified in the contract documents.

1. Drill four, 5/8 inch diameter holes, 3 inches from bottom of riser pipe and insert two, #4 bars in an "X" configuration. Length of bars = D+16 inches
2. Provide perforation configuration as specified in the contract documents.

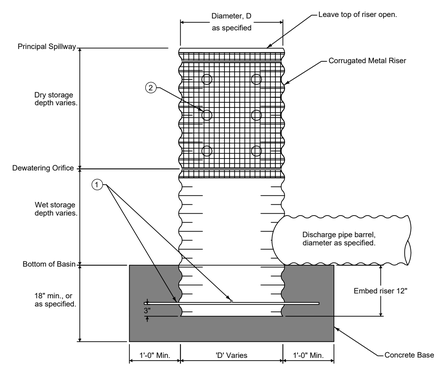

FIGURE 9040.115 | SHEET 1 OF 1

REVISION	
2	10-21-14

9040.115
SHEET 1 of 1

SEDIMENT BASIN DEWATERING DEVICE (PERFORATED RISER)

Alternate anti-vortex device configurations may be utilized upon approval of the Engineer.

1. See sheet 2 for dimensions of cylinder support bars, top plate, and top stiffener.
2. Firmly attach the anti-vortex cylinder to the top of the riser by welding or other means.
3. Corrugated metal or 1/8 inch steel plate cylinder and top.
4. Pressure relief holes may be omitted if ends of corrugations are left fully open when the top is attached.

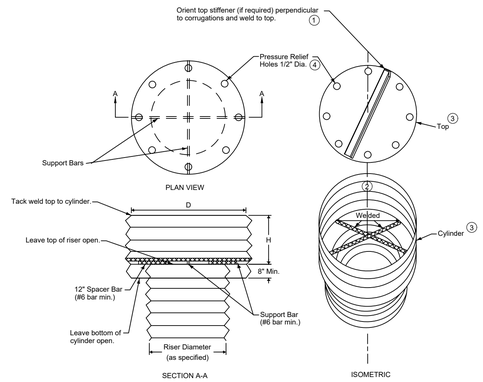

FIGURE 9040.116 | SHEET 1 OF 2

REVISION	
2	10-21-14

9040.116
SHEET 1 of 2

ANTI-VORTEX DEVICE

RISER	CYLINDER				MINIMUM TOP	
Diameter (in.)	Diameter (in.)	Thickness (gage)	Height (H) (in.)	Minimum Size Support Bar	Thickness	Stiffener
12	18	16	6	#6 rebar or 1 1/2" X 3/16" angle	16 ga F & C	----
15	21	16	7	#6 rebar or 1 1/2" X 3/16" angle	16 ga F & C	----
18	27	16	8	#6 rebar or 1 1/2" X 3/16" angle	16 ga F & C	----
21	30	16	11	#6 rebar or 1 1/2" X 3/16" angle	16 ga (C), 14 ga (F)	----
24	36	16	13	#6 rebar or 1 1/2" X 3/16" angle	16 ga (C), 14 ga (F)	----
27	42	16	15	#6 rebar or 1 1/2" X 3/16" angle	16 ga (C), 14 ga (F)	----
36	54	16	17	#8 rebar	14 ga (C), 12 ga (F)	----
42	60	16	19	#8 rebar	14 ga (C), 12 ga (F)	----
48	72	16	21	1 1/4" pipe or 1 1/4" X 1 1/4" X 1/4" angle	14 ga (C), 10 ga (F)	----
54	78	16	25	1 1/4" pipe or 1 1/4" X 1 1/4" X 1/4" angle	14 ga (C), 10 ga (F)	----
60	90	14	29	1 1/2" pipe or 1 1/2" X 1 1/2" X 1/4" angle	12 ga (C), 8 ga (F)	----
66	96	14	33	2" pipe or 2" X 2" X 1/4" angle	12 ga (C), 8 ga (F)	2" X 2" X 1/4" angle
72	102	14	36	2" pipe or 2" X 2" X 1/4" angle	12 ga (C), 8 ga (F)	2 1/2" X 2 1/2" X 1/4" angle
78	114	14	39	2 1/2" pipe or 2" X 2" X 1/4" angle	12 ga (C), 8 ga (F)	2 1/2" X 2 1/2" X 1/4" angle
84	120	12	42	2 1/2" pipe or 2" X 2" X 1/4" angle	12 ga (C), 8 ga (F)	2 1/2" X 2 1/2" X 5/16" angle

Notes:

1. The criterion for sizing the cylinder is that the area between the inside of the cylinder and the outside of the riser is equal to or greater than the area inside the riser. Therefore, the above table is invalid for use with concrete pipe risers.
2. C - Corrugated F - Flat.

REVISION	
2	10-21-14

9040.116
SHEET 2 of 2

ANTI-VORTEX DEVICE

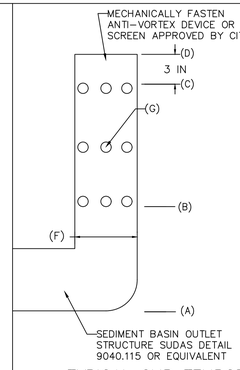

SEDIMENTATION BASIN TEMPORARY OUTLET STRUCTURE TABLE

OUTLET STRICTURE	'EAST/8E' BASIN	'BAILEY WEST' BASIN
(A) BOTTOM OF BASIN ELEVATION	953.00	941.00 (SED) 943.00 (DET)
(B) BOTTOM ROW ORIFICE ELEVATION	955.05	946.56
(C) TOP ROW OF ORIFICE ELEVATION	956.35	947.38
(D) TOP OF RISER ELEVATION	957.50	947.75
(E) TOP OF BERM ELEVATION	963.00	950.00
(F) RISER DIAMETER [INCH]	24	24
(G) ORIFICE DIAMETER [INCH]	2.50	2.50
ORIFICES PER ROW	9	7
ROWS OF ORIFICES	4	2

TYPICAL CMP TEMPORARY EROSION CONTROL RISER CLEANOUT PIPE

NOT TO SCALE

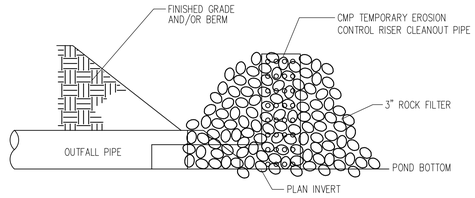

OUTFALL TEMPORARY SILTATION DETAIL

N.T.S.

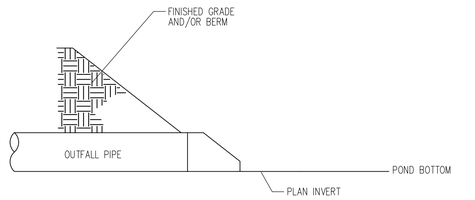

OUTFALL AFTER UPSTREAM STABILIZATION DETAIL

N.T.S.

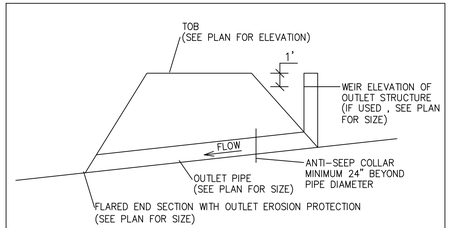

SMF OUTLET PIPE AND BERM TYPICAL

NTS

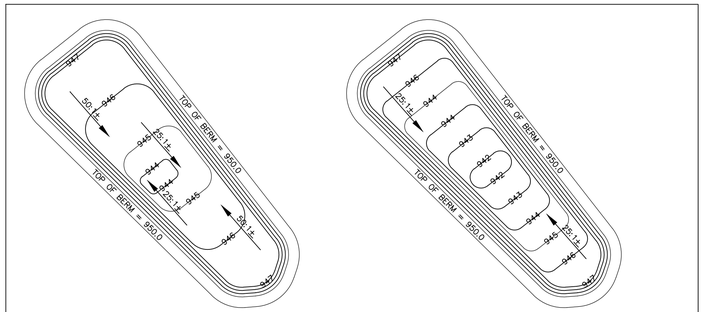

'BAILEY WEST' SEDIMENTATION/DETENTION BASIN

N.T.S.

GLYNN VILLAGE PLAT 10 - DETAILS 5

LOCATION:	SCALE: AS NOTED	DESIGNED BY: JRK	DRAWN BY: PJV
	DWG: 15-013-DTL-1.dwg	CHECKED BY: DJS	DATE: 02/24/2016
	FIELD BOOK:	SHEET 91 OF 100	FILE NO.: 15-013

NO.	REVISION	DATE	BY	FOR:

ERG
Engineering Resource Group, Inc.
Engineers and Surveyors
2413 GRAND AVENUE
DES MOINES, IOWA 50312
(515) 288-4823

15-013

J:\2015 Proj\15-013\DESIGN\15-013-DTL-1.dwg, 5/5/2016 10:29:33 AM, Jay

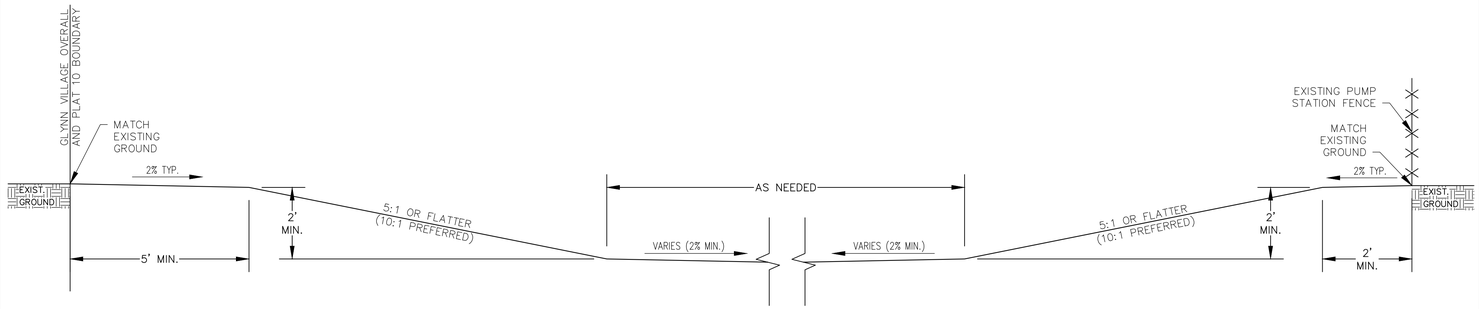

POTENTIAL BORROW AREA – EAST–WEST SECTION

N.T.S.

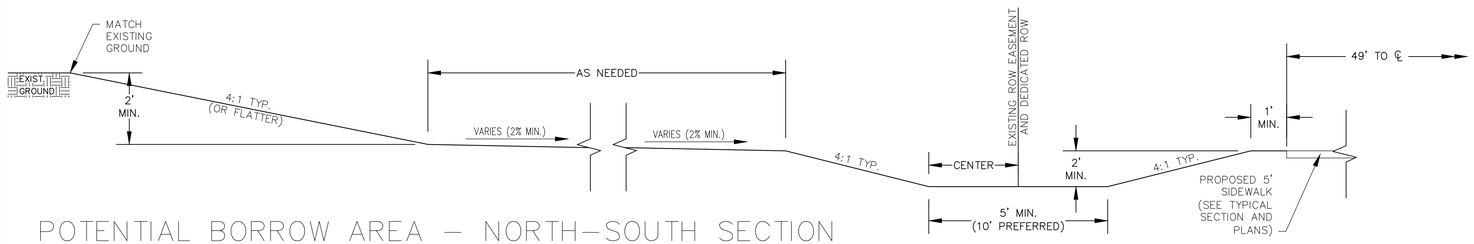

POTENTIAL BORROW AREA – NORTH–SOUTH SECTION

N.T.S.

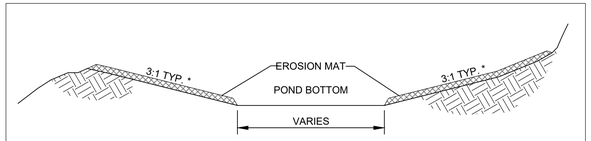

TYPICAL POND SECTION

N.T.S.

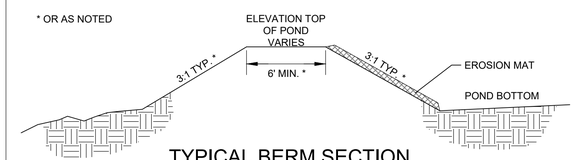

TYPICAL BERM SECTION

N.T.S.

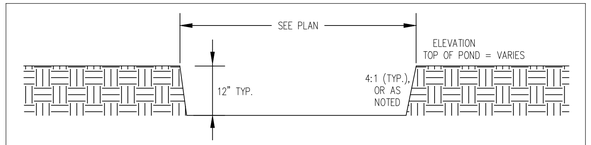

EMERGENCY OVERFLOW/CROSS FLOW WEIR SECTION

N.T.S.

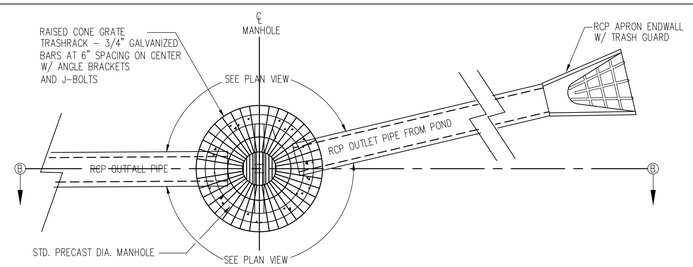

OUTLET STRUCTURE

N.T.S.

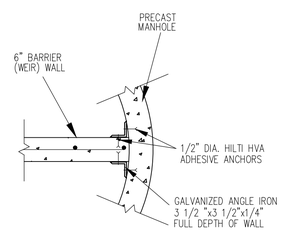

CONNECTION OPTION A

N.T.S.

NOTES:

1. PERMANENTLY SECURE COVER TO MANHOLE AND/OR RISER WITH REMOVABLE FASTENERS.
2. USE 1/4" MINIMUM BAR STOCK WITH ON–CENTER SPACINGS OF APPROXIMATELY 4" AND 1 1/4".
3. CONTRACTOR SHALL SUBMIT SHOP DRAWINGS FOR GALVANIZED GRATING.

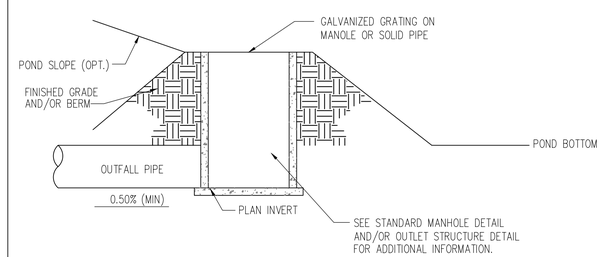

RISER PIPE DETAIL

N.T.S.

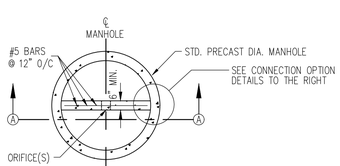

PLAN VIEW

N.T.S.

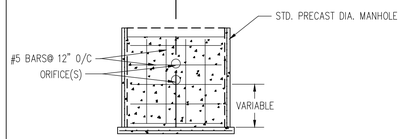

SECTION A–A

N.T.S.

REINFORCED CONCRETE BARRIER (WIER) WALL STRUCTURAL DETAIL

N.T.S.

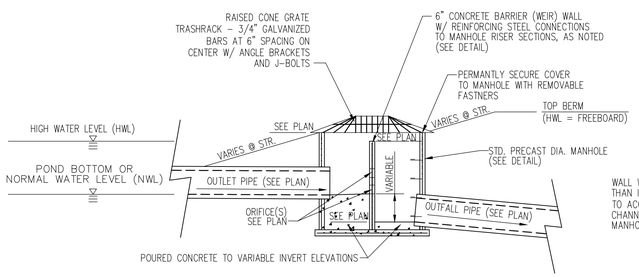

SECTION B–B

N.T.S.

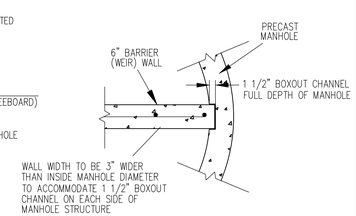

CONNECTION OPTION B

N.T.S.

TYPICAL DETENTION BASIN OUTLET CONTROL STRUCTURE

N.T.S.

GLYNN VILLAGE PLAT 10 - DETAILS 6

LOCATION:	SCALE: AS NOTED	DESIGNED BY: JRK	DRAWN BY: PJV
	DWG: 15–013–DTL–1.dwg	CHECKED BY: DJS	DATE: 02/24/2016
	FIELD BOOK:	SHEET 92 OF 100	FILE NO.: 15–013

NO.	REVISION	DATE	BY	FOR:

ERG
Engineering Resource Group, Inc.
Engineers and Surveyors
2413 GRAND AVENUE
DES MOINES, IOWA 50312
(515) 288–4823

15–013

J:\2015 Proj\15-013\DESIGN\15-013-DTL-1.dwg, 5/5/2016 10:29:37 AM, Jay

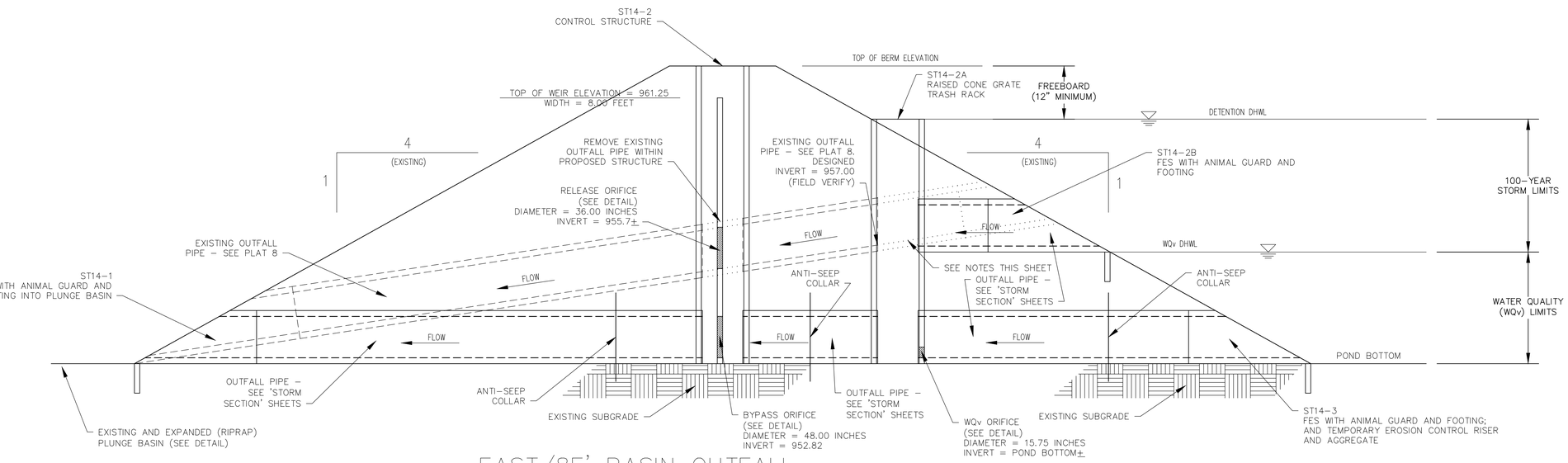

EAST/8E' BASIN OUTFALL

N.T.S.

NOTES:

1. SEE 'GRADING AND STORM' PLAN SHEETS FOR ADDITIONAL INFORMATION.
2. SEE 'STORM SECTION' PLAN SHEETS FOR ADDITIONAL INFORMATION ON PIPE AND STRUCTURE SIZING.
3. SEE 'DETAIL' SHEET 91 FOR ADDITIONAL INFORMATION ON TEMPORARY EROSION CONTROL RISER AND TEMPORARY SEDIMENTATION BASIN.
4. SEE NOTED DETAILS AND OTHER DETAILS FOR ADDITIONAL INFORMATION.
5. 100-YEAR STORM (DETENTION) VOLUME IS VOLUME ABOVE THE WQv VOLUME.
6. TEMPORARY EROSION CONTROL RISER AND AGGREGATE SHALL BE REMOVED WHEN ALL UPSTREAM AND RESPECTIVE DRAINAGE AREAS HAVE FINAL STABILIZATION.
7. REMOVE EXISTING OUTFALL PIPE (PARTIAL) AND FES TO FIT LOCATION AND SIZE OF PROPOSED STRUCTURE.

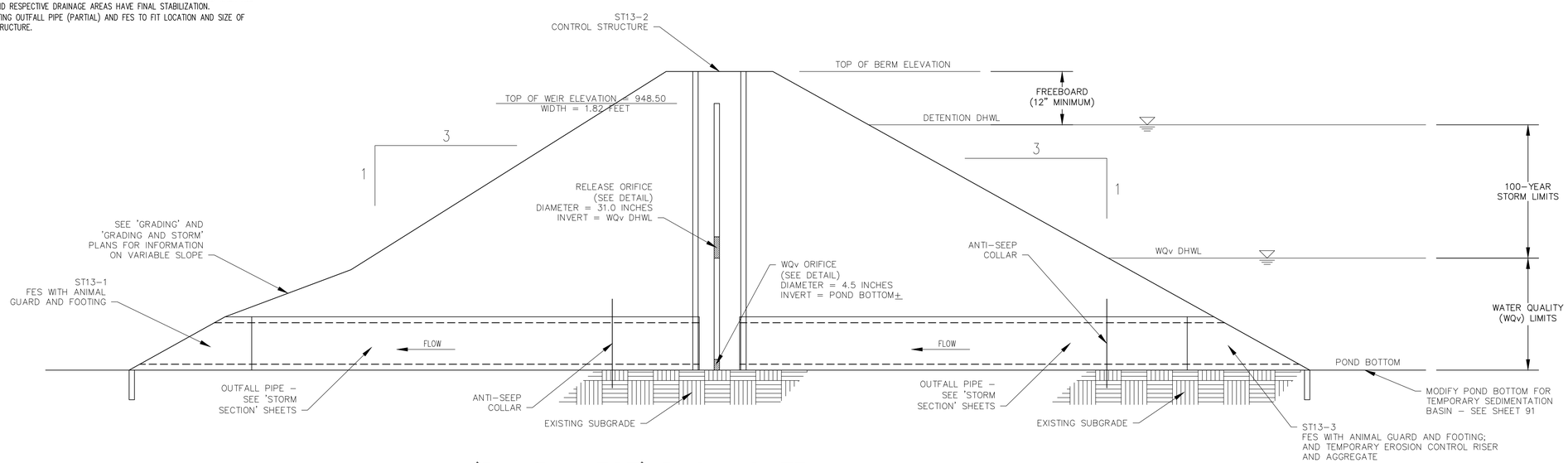

'BAILEY WEST' BASIN OUTFALL

N.T.S.

GLYNN VILLAGE PLAT 10 - DETAILS 7

LOCATION:	SCALE: AS NOTED	DESIGNED BY: JRK	DRAWN BY: PJV
	DWG: 15-013-DTL-1.dwg	CHECKED BY: DJS	DATE: 02/24/2016
	FIELD BOOK:	SHEET 93 OF 100	FILE NO.: 15-013

NO.	REVISION	DATE	BY	FOR:

FRG
Engineering Resource Group, Inc.
Engineers and Surveyors
2413 GRAND AVENUE
DES MOINES, IOWA 50312
(515) 288-4823

15-013

J:\2015 Proj\15-013\DESIGN\15-013-DTL-1.dwg, 5/5/2016 10:29:42 AM, Jay

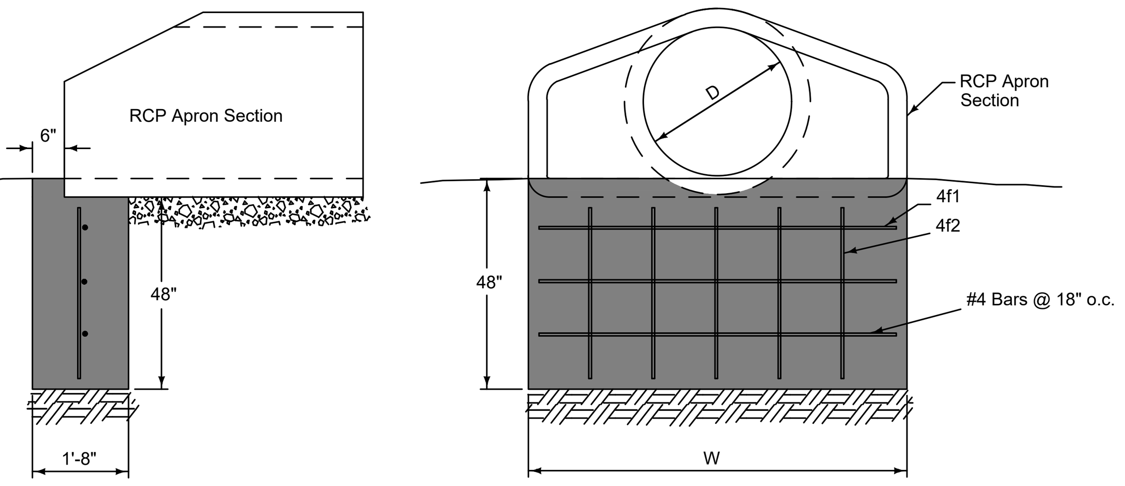

TYPICAL SECTION

ELEVATION

REINFORCING BAR LIST

D	W	Mark	Size	Length	Count
12"	2'-4"	4f1	4	2'-0"	3
		4f2	4	3'-8"	2
15"	2'-10 ½"	4f1	4	2'-6 ½"	3
		4f2	4	3'-8"	2
18"	3'-5"	4f1	4	3'-1"	3
		4f2	4	3'-8"	3
24"	4'-6"	4f1	4	4'-2"	3
		4f2	4	3'-8"	3
30"	5'-7"	4f1	4	5'-3"	3
		4f2	4	3'-8"	4
36"	6'-8"	4f1	4	6'-4"	3
		4f2	4	3'-8"	5
42"	7'-3"	4f1	4	6'-11"	3
		4f2	4	3'-8"	5

D	W	Mark	Size	Length	Count
48"	7'-10"	4f1	4	7'-6"	3
		4f2	4	3'-8"	6
54"	8'-5"	4f1	4	8'-1"	3
		4f2	4	3'-8"	6
60"	8'-11"	4f1	4	8'-7"	3
		4f2	4	3'-8"	6
66"	8'-11"	4f1	4	8'-7"	3
		4f2	4	3'-8"	6
72"	10'-0"	4f1	4	9'-8"	3
		4f2	4	3'-8"	7
78"	10'-7"	4f1	4	10'-3"	3
		4f2	4	3'-8"	7
84"	11'-1"	4f1	4	10'-9"	3
		4f2	4	3'-8"	8

FIGURE 4030.221 SHEET 1 OF 1

REVISION 1 10-21-14
4030.221
SHEET 1 of 1

RCP APRON SECTION FOOTING

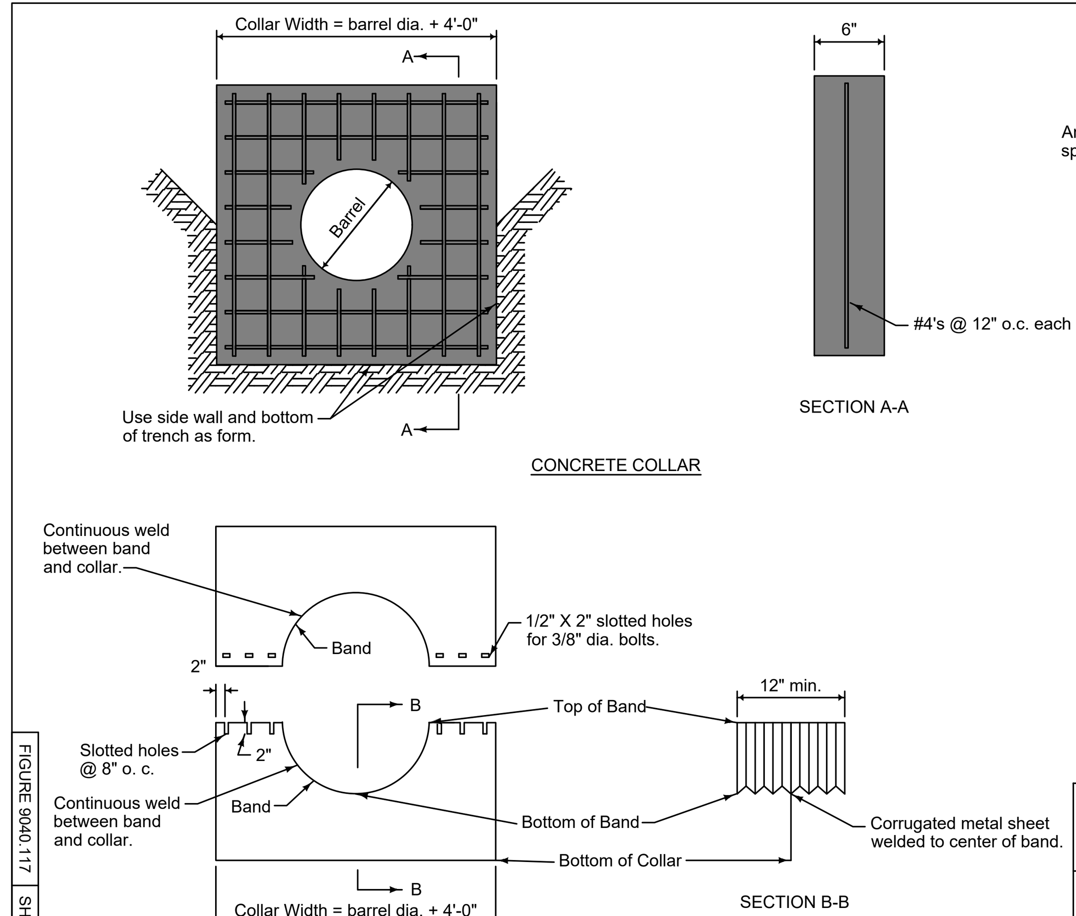

CONCRETE COLLAR

SECTION A-A

Anti-seep collars are not required unless specified in the contract documents.

CMP COLLAR

SECTION B-B

FIGURE 9040.117 SHEET 1 OF 1

REVISION 2 10-21-14
9040.117
SHEET 1 of 1

ANTI-SEEP COLLAR

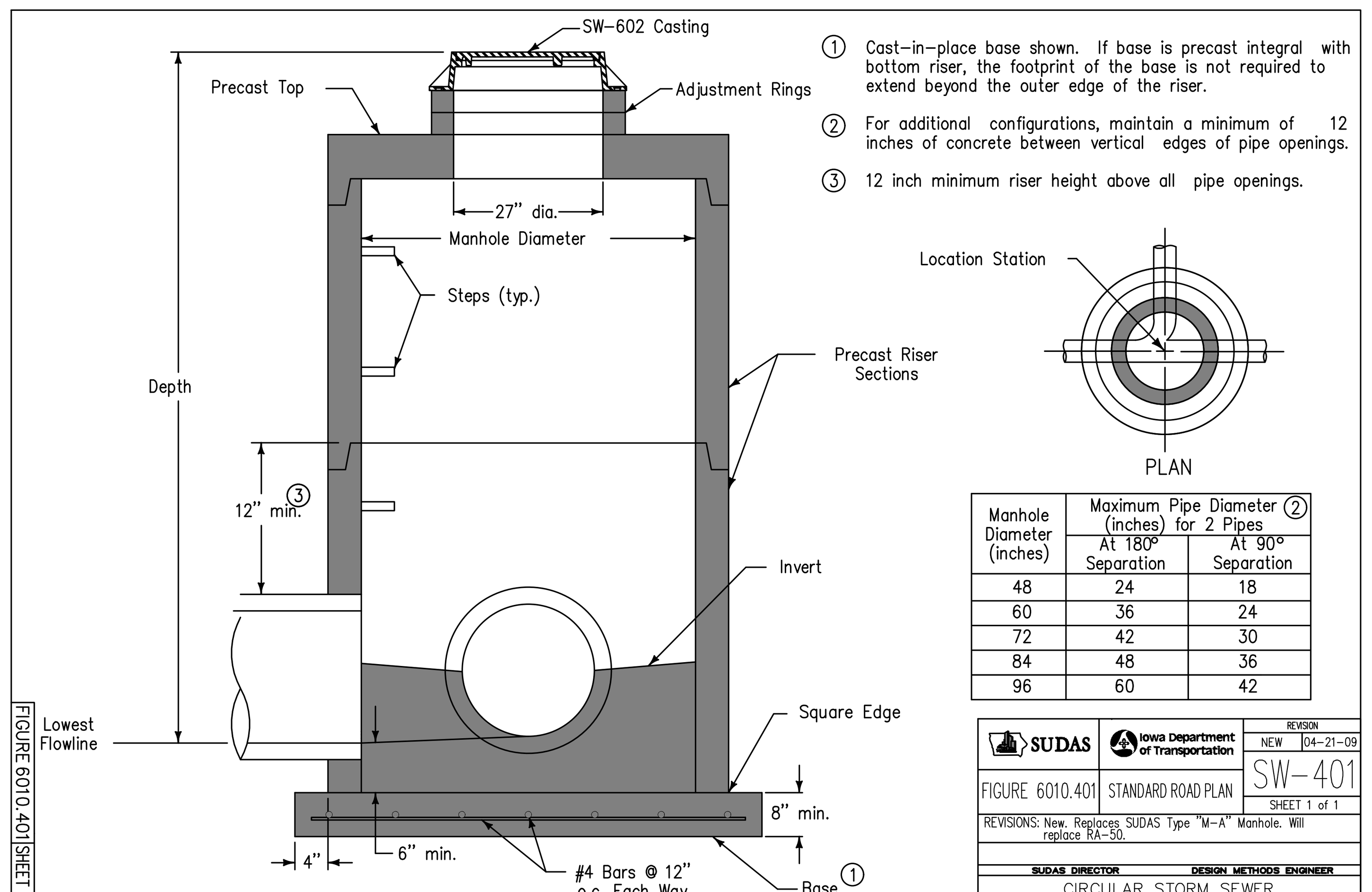

TYPICAL SECTION

PLAN

1. Cast-in-place base shown. If base is precast integral with bottom riser, the footprint of the base is not required to extend beyond the outer edge of the riser.
2. For additional configurations, maintain a minimum of 12 inches of concrete between vertical edges of pipe openings.
3. 12 inch minimum riser height above all pipe openings.

Manhole Diameter (inches)	Maximum Pipe Diameter (2) (inches) for 2 Pipes	
	At 180° Separation	At 90° Separation
48	24	18
60	36	24
72	42	30
84	48	36
96	60	42

FIGURE 6010.401 SHEET 1 OF 1

SUDAS | Iowa Department of Transportation | REVISION NEW 04-21-09
FIGURE 6010.401 STANDARD ROAD PLAN SW-401 SHEET 1 of 1
REVISIONS: New. Replaces SUDAS Type "M-A" Manhole. Will replace RA-50.
SUDAS DIRECTOR DESIGN METHODS ENGINEER
CIRCULAR STORM SEWER MANHOLE

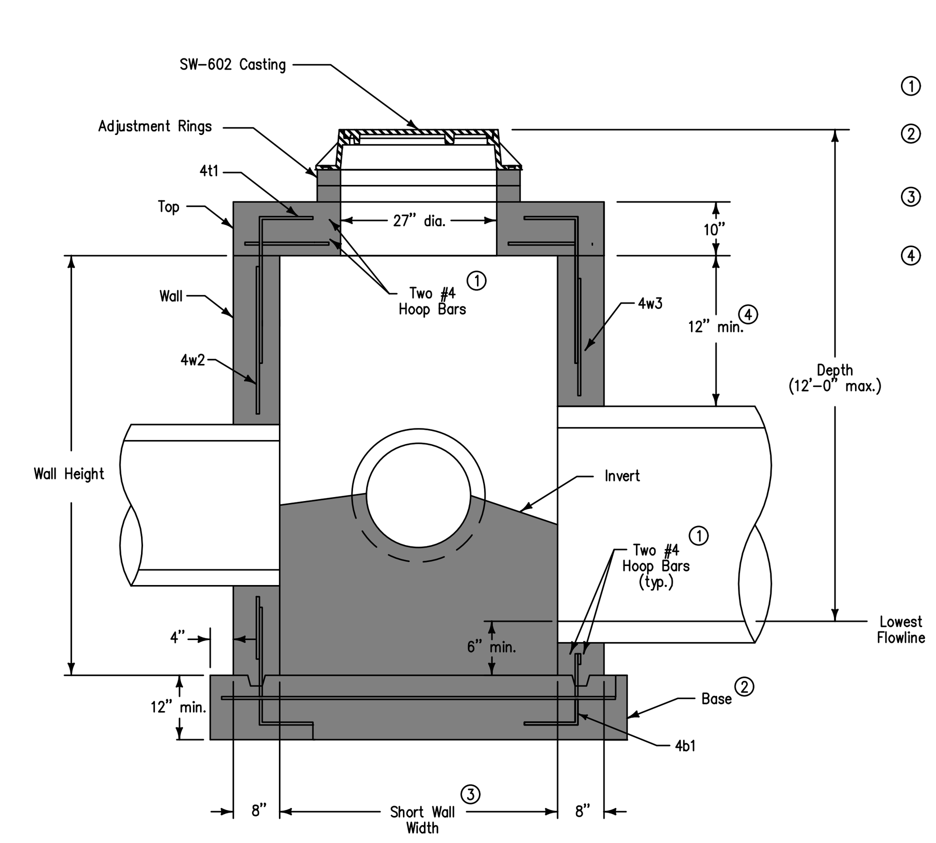

TYPICAL SECTION

Adjacent walls may have different widths based upon pipe configuration, but structure must be rectangular.

1. Provide two #4 hoop bars at top opening and at all pipe openings.
2. Cast-in-place base shown. If base is precast integral with walls, the footprint of the base is not required to extend beyond the outer edge of the walls.
3. Wall widths vary with pipe diameter and range from 4 feet minimum to 9 feet maximum. Provide 12 inches of wall width (minimum) each side of pipe opening.
4. 12 inch minimum wall height above all pipes.

FIGURE 6010.403 SHEET 1 OF 2

SUDAS | Iowa Department of Transportation | REVISION NEW 04-21-09
FIGURE 6010.403 STANDARDROADPLAN SW-403 SHEET 1 of 2
REVISIONS: New._Replaces_SUDAS_Type_"M-C"_Manhole.
SUDAS DIRECTOR DESIGN METHODS ENGINEER
DEEP WELL RECTANGULAR STORM SEWER MANHOLE

1. Provide two #4 hoop bars at top opening and at all pipe openings.
2. Cast-in-place base shown. If base is precast integral with walls, the footprint of the base is not required to extend beyond the outer edge of the walls.
3. Wall widths vary with pipe diameter and range from 4 feet minimum to 9 feet maximum. Provide 12 inches of wall width (minimum) each side of pipe opening.

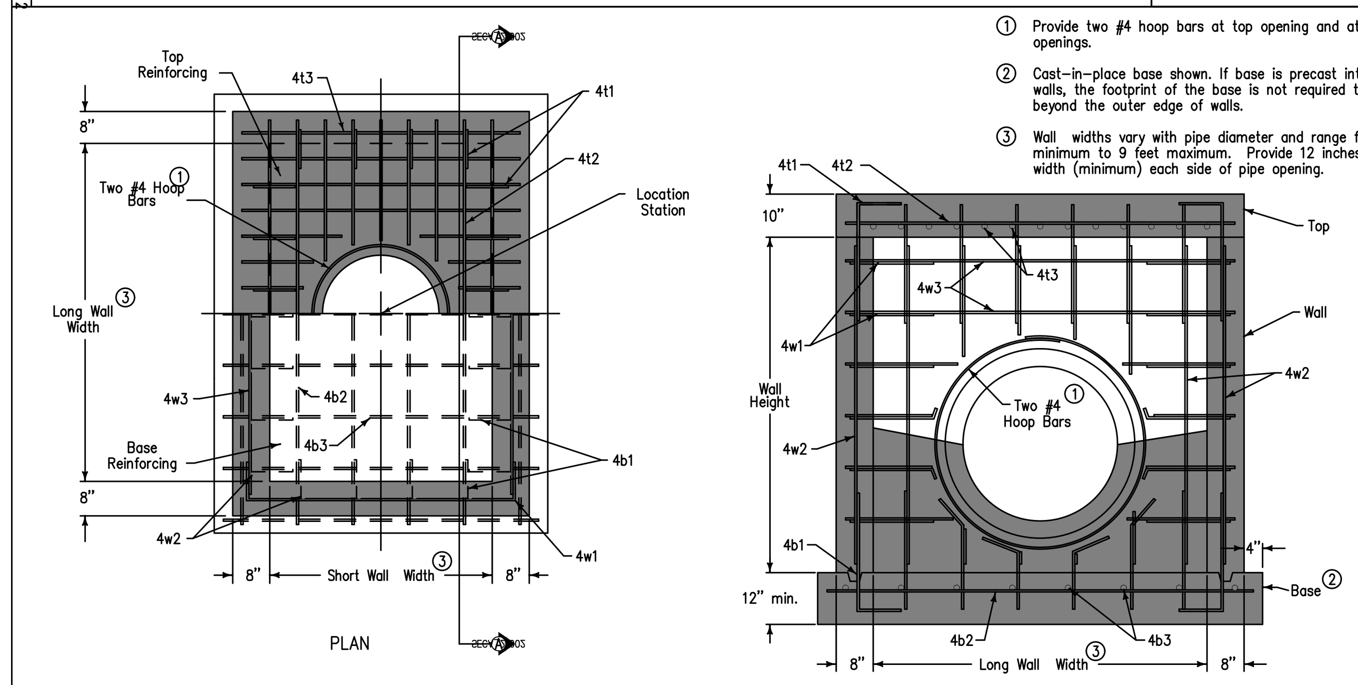

PLAN

SECTION A–A

REINFORCING BAR LIST					
Mark	Size	Location	Shape	Length	Spacing
4t1	4	Top	┐	36"	12"
4t2	4	Top	—	Long Wall plus 12"	6"
4t3	4	Top	—	Short Wall plus 12"	6"
4b1	4	Base	└	36"	12"
4b2	4	Base	—	Long Wall plus 18"	12"
4b3	4	Base	—	Short Wall plus 18"	12"
4w1	4	Walls	┌┐	Short Wall plus 48"	12"
4w2	4	Walls	—	Wall Height minus 4"	12"
4w3	4	Walls	—	Long Wall plus 12"	12"

BENT BARS

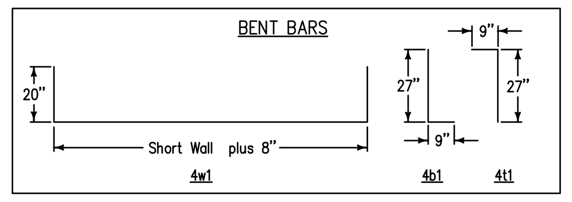

FIGURE 6010.403 SHEET 2 OF 2

SUDAS | Iowa Department of Transportation | REVISION NEW 04-21-09
FIGURE 6010.403 STANDARDROADPLAN SW-403 SHEET 2 of 2
REVISIONS: New._Replaces_SUDAS_Type_"M-C"_Manhole.
SUDAS DIRECTOR DESIGN METHODS ENGINEER
DEEP WELL RECTANGULAR STORM SEWER MANHOLE

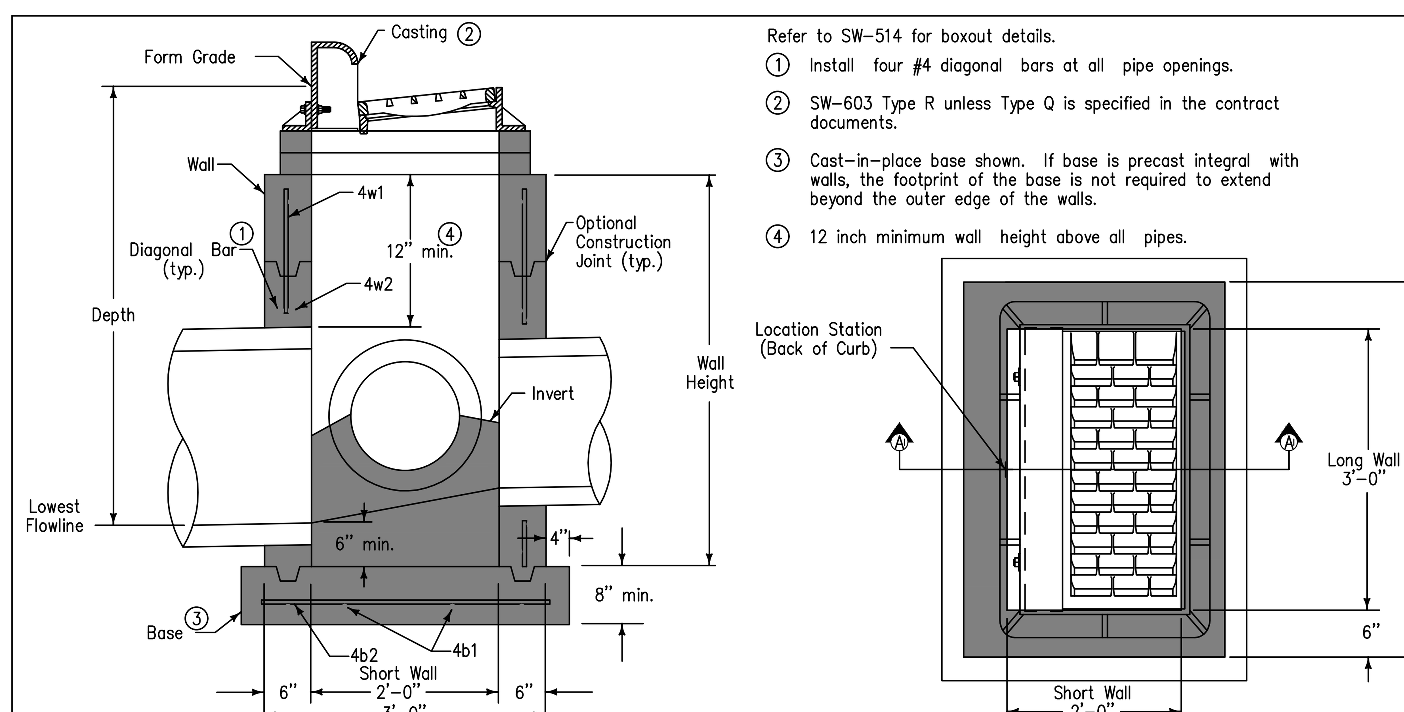

SECTION A–A

PLAN

Refer to SW-514 for boxout details.

1. Install four #4 diagonal bars at all pipe openings.
2. SW-603 Type R unless Type Q is specified in the contract documents.
3. Cast-in-place base shown. If base is precast integral with walls, the footprint of the base is not required to extend beyond the outer edge of the walls.
4. 12 inch minimum wall height above all pipes.

REINFORCING BAR LIST						
Mark	Size	Location	Shape	Length	Count	Spacing
4w1	4	Walls	———	Wall Height minus 4"	14	12"
4w2	4	Long Walls	———	3'–8"	Varies	12"
4w3	4	Short Walls	———	2'–8"	Varies	12"
4b1	4	Base	———	4'–2"	4	10"
4b2	4	Base	———	3'–2"	5	10"

MAXIMUM PIPE DIAMETERS		
Pipe Location	Precast Structure	Cast–in–place Structure
Short Wall	15"	18"
Long Wall	24"	30"

FIGURE 6010.501 SHEET 1 OF 1

SUDAS | Iowa Department of Transportation | REVISION 1 10-16-12
FIGURE 6010.501 STANDARD ROAD PLAN SW-501 SHEET 1 of 1
REVISIONS: Added reference to SW-514.
SUDAS DIRECTOR DESIGN METHODS ENGINEER
SINGLE GRATE INTAKE

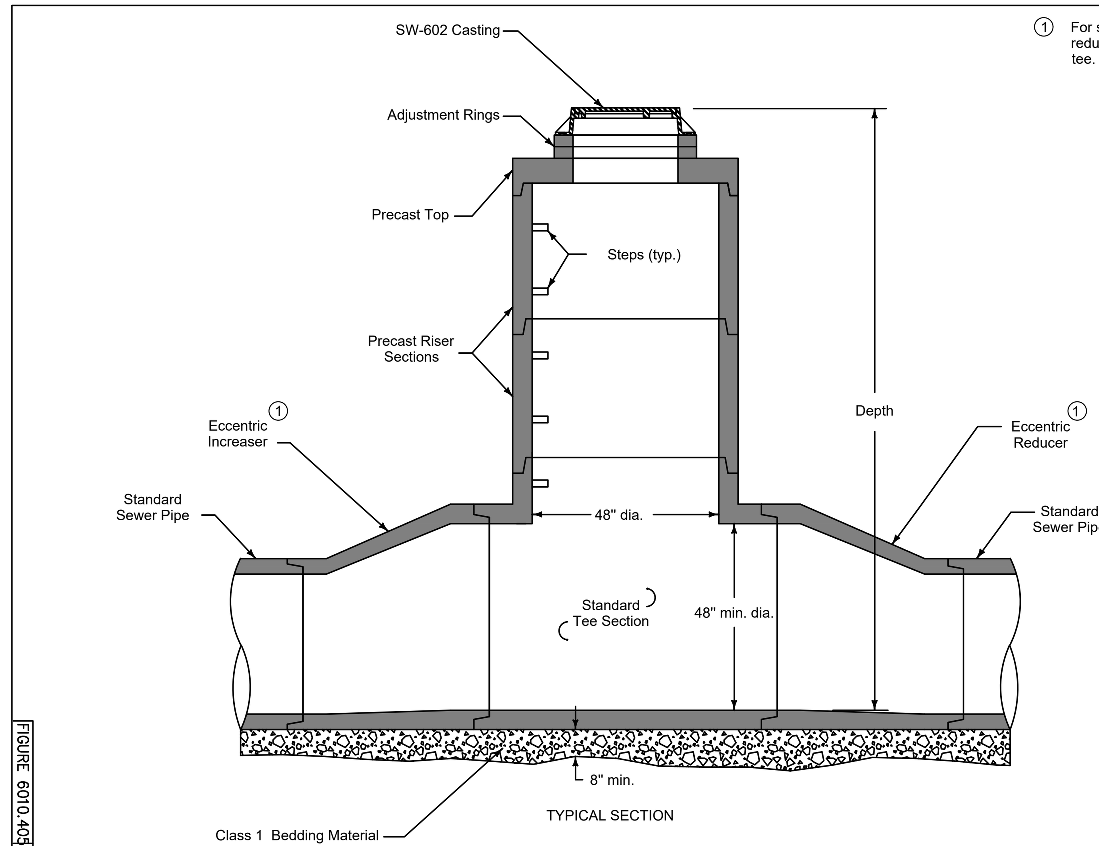

TYPICAL SECTION

STANDARD TEE (1)

1. For sewer pipes less than 48 inch diameter, install eccentric reducers/increasers with a standard tee or utilize a composite tee.

FIGURE 6010.405 SHEET 1 OF 2

REVISION 1 10-21-14
FIGURE 6010.405 STANDARDROADPLAN SW-405 SHEET 1 of 2
SUDAS DIRECTOR DESIGN METHODS ENGINEER
TEE-SECTION STORM SECTION MANHOLE

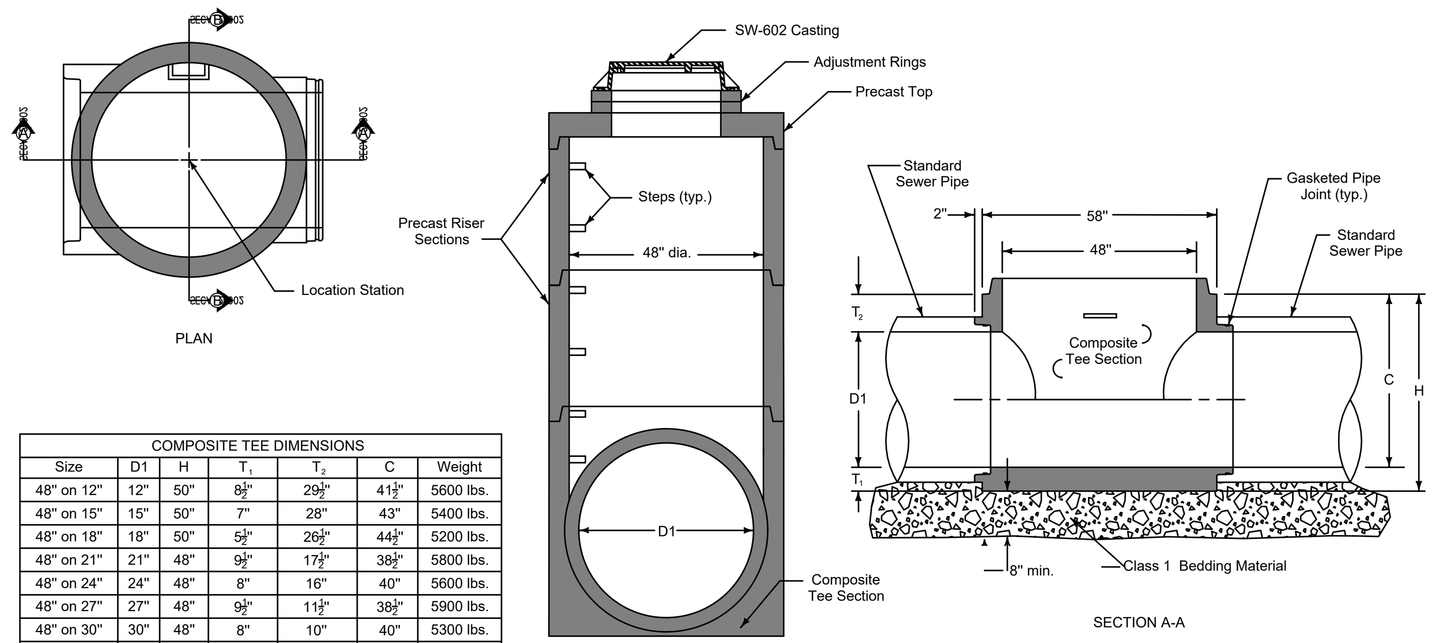

PLAN

SECTION B-B

SECTION A-A

COMPOSITE TEE DIMENSIONS						
Size	D1	H	T_1	T_2	C	Weight
48" on 12"	12"	50"	8½"	29½"	41½"	5600 lbs.
48" on 15"	15"	50"	7"	28"	43"	5400 lbs.
48" on 18"	18"	50"	5½"	26½"	44½"	5200 lbs.
48" on 21"	21"	48"	9½"	17½"	38½"	5800 lbs.
48" on 24"	24"	48"	8"	16"	40"	5600 lbs.
48" on 27"	27"	48"	9½"	11½"	38½"	5900 lbs.
48" on 30"	30"	48"	8"	10"	40"	5300 lbs.
48" on 33"	33"	54"	9½"	11½"	44½"	6600 lbs.
48" on 36"	36"	54"	8"	10"	46"	6100 lbs.

COMPOSITE TEE

Alternate to standard tee with eccentric reducer (for pipes 36" and smaller).

FIGURE 6010.405 SHEET 2 OF 2

REVISION 1 10-21-14
FIGURE 6010.405 STANDARDROADPLAN SW-405 SHEET 2 of 2
SUDAS DIRECTOR DESIGN METHODS ENGINEER
TEE-SECTION STORM SECTION MANHOLE

Refer to SW-514 for boxout details.

1. SW-603 Type R unless Type Q is specified in the contract documents.
2. Cast-in-place base shown. Base may be square. If base is precast integral with walls, the footprint of the base is not required to extend beyond the outer edge of the walls.
3. For additional configurations, maintain a minimum of 12 inches of concrete between vertical edges of pipe openings.
4. 12 inch minimum riser height above all pipes.

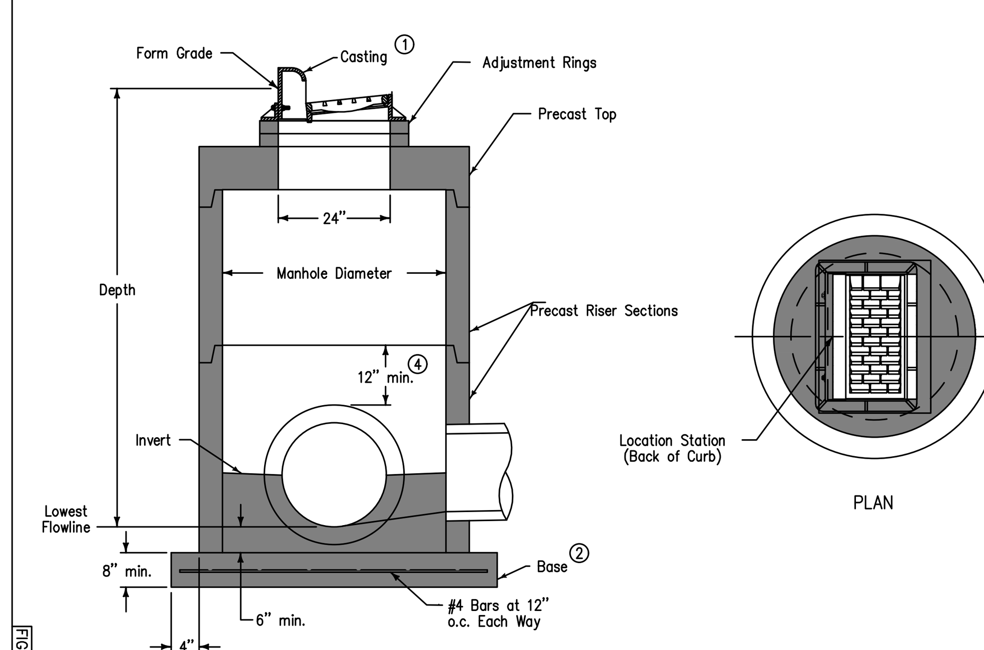

TYPICAL SECTION

PLAN

Manhole Diameter (inches)	Maximum Pipe Diameter (3) (inches) for 2 Pipes	
	at 180° Separation	at 90° Separation
48	24	18
60	36	24
72	42	30
84	48	36
96	60	42

FIGURE 6010.502 SHEET 1 OF 1

SUDAS | Iowa Department of Transportation | REVISION 1 10-16-12
FIGURE 6010.502 STANDARDROADPLAN SW-502 SHEET 1 of 1
REVISIONS: Added reference to SW-514.
SUDAS DIRECTOR DESIGN METHODS ENGINEER
CIRCULAR SINGLE GRATE INTAKE

94

GLYNN VILLAGE PLAT 10 - DETAILS 8

SCALE: AS NOTED	DESIGNED BY: JRK	DRAWN BY: PJV
DWG: 15-013-DTL-1.dwg	CHECKED BY: DJS	DATE: 02/24/2016
FIELD BOOK:	SHEET 94 OF 100	FILE NO.: 15-013

LOCATION:
FOR:
NO. | REVISION | DATE | BY

ERG
Engineering Resource Group, Inc.
Engineers and Surveyors
2413 GRAND AVENUE
DES MOINES, IOWA 50312
(515) 288-4823

15-013

J:\2015 Proj\15-013\DESIGN\15-013-DTL-1.dwg, 5/5/2016 10:29:47 AM, Jay

Refer to SW-514 for boxout details.

1. Install four #4 diagonal bars at manhole opening and at all pipe openings.
2. Cast-in-place base shown. If base is precast integral with walls, the footprint of the base is not required to extend beyond the outer edge of the walls.
3. 12 inch minimum wall height above all pipes.

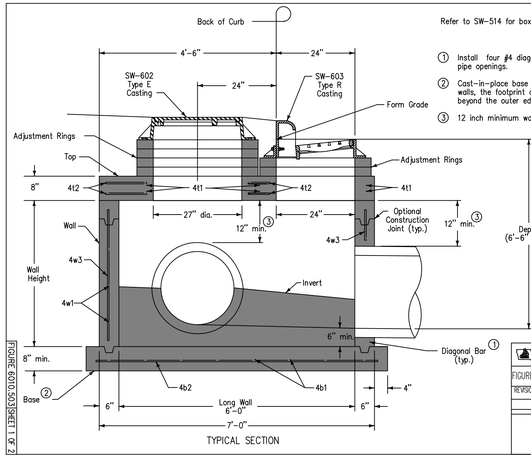

TYPICAL SECTION

SUDAS | Iowa Department of Transportation | REVISION 1 10-16-12 | FIGURE 6010.503 STANDARD ROAD PLAN | SW-503 | SHEET 1 of 2

REVISIONS: Added reference to SW-514.

SUDAS DIRECTOR | DESIGN METHODS ENGINEER

SINGLE GRATE INTAKE WITH MANHOLE

FIGURE 6010.503 SHEET 1 OF 2

1. Install four #4 diagonal bars at manhole opening and at all pipe openings.

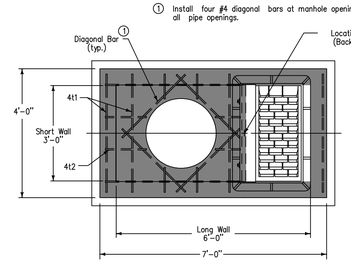

PLAN

REINFORCING BAR LIST						
Mark	Size	Location	Shape	Count	Length	Spacing
4t1	4	Top	——	12	3'-8"	12"
4t2	4	Top	——	8	4'-2"	12"
4b1	4	Base	——	7	4'-2"	13"
4b2	4	Base	——	5	7'-2"	10"
4w1	4	Short Walls	——	Varies	3'-8"	12"
4w2	4	Long Walls	——	Varies	6'-8"	12"
4w3	4	Walls	——	18	Wall Height minus 4"	13"

MAXIMUM PIPE DIAMETERS		
Pipe Location	Precast Structure	Cast-in-place Structure
Short Wall	24"	30"
Long Wall	30"	36"

SUDAS | Iowa Department of Transportation | REVISION 1 10-16-12 | FIGURE 6010.503 STANDARD ROAD PLAN | SW-503 | SHEET 2 of 2

REVISIONS: Added reference to SW-514.

SUDAS DIRECTOR | DESIGN METHODS ENGINEER

SINGLE GRATE INTAKE WITH MANHOLE

FIGURE 6010.503 SHEET 2 OF 2

1. Install four #4 diagonal bars at all pipe openings.
2. Cast-in-place base shown. If base is precast integral with walls, the footprint of the base is not required to extend beyond the outer edge of the walls.
3. 12 inch minimum wall height above all pipes.

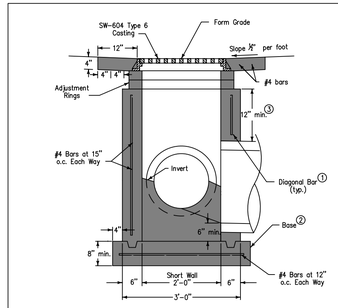

SECTION A-A

MAXIMUM PIPE DIAMETERS		
Pipe Location	Precast Structure	Cast-in-place Structure
Short Wall	15"	18"
Long Wall	24"	30"

1. Install four #4 diagonal bars at all pipe openings.
2. Cast-in-place base shown. If base is precast integral with walls, the footprint of the base is not required to extend beyond the outer edge of the walls.
3. 12 inch minimum wall height above all pipes.

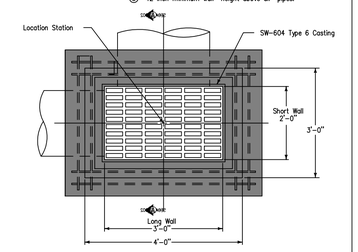

PLAN

SUDAS | Iowa Department of Transportation | REVISION NEW 04-21-09 | FIGURE 6010.511 STANDARD ROAD PLAN | SW-511 | SHEET 1 of 1

REVISIONS: New. Replaces SUDAS Area Type "M-H" Inlet.

SUDAS DIRECTOR | DESIGN METHODS ENGINEER

RECTANGULAR AREA INTAKE

FIGURE 6010.511 SHEET 1 OF 1

Refer to SW-514 for boxout details.

1. Install four #4 diagonal bars at all pipe openings.
2. Cast-in-place base shown. If base is precast integral with walls, the footprint of the base is not required to extend beyond the outer edge of the walls.
3. 12 inch minimum wall height above all pipes.

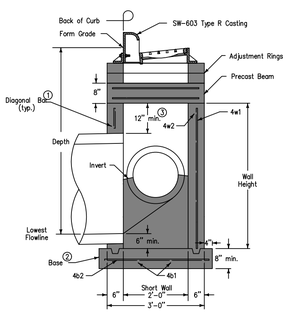

SECTION A-A

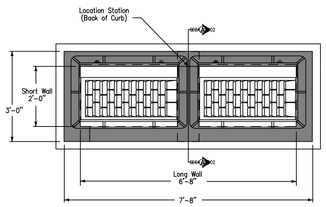

PLAN

SUDAS | Iowa Department of Transportation | REVISION 1 10-16-12 | FIGURE 6010.505 STANDARD ROAD PLAN | SW-505 | SHEET 1 of 2

REVISIONS: Added reference to SW-514.

SUDAS DIRECTOR | DESIGN METHODS ENGINEER

DOUBLE GRATE INTAKE

FIGURE 6010.505 SHEET 1 OF 2

1. Install four #4 diagonal bars at all pipe openings.
2. Cast-in-place base shown. If base is precast integral with walls, the footprint of the base is not required to extend beyond the outer edge of the walls.
3. 12 inch minimum wall height above all pipes.

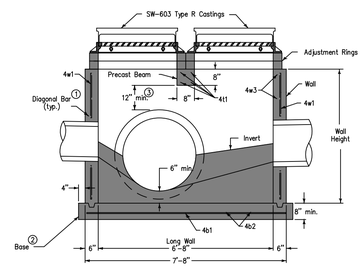

TYPICAL SECTION

REINFORCING BAR LIST						
Mark	Size	Location	Shape	Count	Length	Spacing
4t1	4	Beam	——	4	2'-8"	4"
4b1	4	Base	——	4	7'-10"	10"
4b2	4	Base	——	8	3'-2"	12"
4w1	4	Walls	——	20	Wall Height minus 4"	12"
4w2	4	Long Walls	——	Varies	7'-4"	12"
4w3	4	Short Walls	——	Varies	2'-8"	12"

MAXIMUM PIPE DIAMETERS		
Pipe Location	Precast Structure	Cast-in-place Structure
Short Wall	15"	18"
Long Wall	60"	66"

SUDAS | Iowa Department of Transportation | REVISION 1 10-16-12 | FIGURE 6010.505 STANDARD ROAD PLAN | SW-505 | SHEET 2 of 2

REVISIONS: Added reference to SW-514.

SUDAS DIRECTOR | DESIGN METHODS ENGINEER

DOUBLE GRATE INTAKE

FIGURE 6010.505 SHEET 2 OF 2

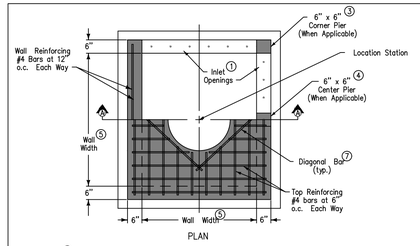

PLAN

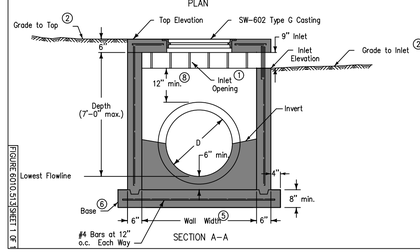

SECTION A-A

Structure may be built with openings on any or all sides. Provide openings and orientation as specified in the contract documents.

Adjacent walls may have different widths based upon pipe configuration, but structure must be rectangular.

1. Construct inlet openings with 15-inch #4 epoxy-coated bars at 8 inches on center. Embed bars a minimum of 3 inches into walls and top at all openings.
2. Grade to inlet elevation on open sides. Grade to top elevation on closed sides.
3. Corner pier required between openings of two adjacent walls. Extend wall reinforcing vertically through pier. Install one additional 15-inch #4 bar in pier.
4. Center pier required at center of any inlet opening with length of 5 feet or greater. Extend wall reinforcing vertically through pier. Install one additional 15-inch #4 bar in pier.
5. Wall widths vary with pipe diameter. Provide 6 inches of wall width (minimum) each side of pipe opening. Minimum wall width is 36 inches. Maximum wall width is 72 inches.
6. Cast-in-place base shown. If base is precast integral with walls, the footprint of base is not required to extend beyond the outer edge of the walls.
7. Install four #4 diagonal bars at all pipe openings.
8. 12" minimum wall height above all pipes.

SUDAS | Iowa Department of Transportation | REVISION NEW 04-21-09 | FIGURE 6010.513 STANDARD ROAD PLAN | SW-513 | SHEET 1 of 1

REVISIONS: New. Replaces SUDAS Area Type "M-G" Intake.

SUDAS DIRECTOR | DESIGN METHODS ENGINEER

OPEN-SIDED AREA INTAKE

FIGURE 6010.513 SHEET 1 OF 1

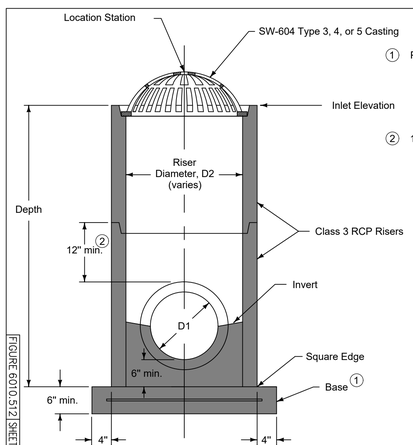

TYPICAL SECTION

CASE 1

1. Precast (shown) or cast-in-place base:
   - Precast: 6 inch thick concrete with #6 welded wire mesh on 4 inch centers (WWF 4" x 4"). Center mesh vertically within base.
   - Cast-in-place: 8 inch thick non-reinforced concrete.
2. 12 inch minimum riser height above all pipes.

INTAKE SIZE - CASE 1	
Outlet Pipe Diameter, D1	Minimum Riser Diameter, D2
12"	18"
15"	24"
18"	24"
21"	30"
24"	30"
27"	36"

FIGURE 6010.512 | STANDARD ROAD PLAN | REVISION 2 10-21-14 | SW-512 | SHEET 1 of 2

REVISIONS: Deleted the flow arrow on sheet 2.

SUDAS DIRECTOR | DESIGN METHODS ENGINEER

CIRCULAR AREA INTAKE

FIGURE 6010.512 SHEET 1 OF 2

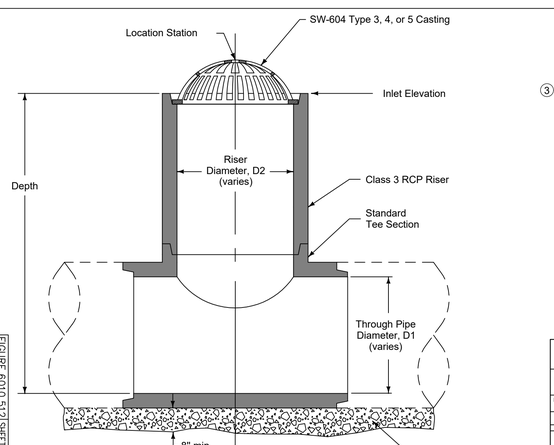

TYPICAL SECTION

CASE 2

3. Minimum riser diameter is 18 inches.

INTAKE SIZE - CASE 2	
Through Pipe Diameter, D1	Maximum Riser Diameter, D2
18"	18"
21"	18"
24"	24"
27"	24"
30"	30"
36" or more	36"

FIGURE 6010.512 | STANDARD ROAD PLAN | REVISION 2 10-21-14 | SW-512 | SHEET 2 of 2

REVISIONS: Deleted the flow arrow on sheet 2.

SUDAS DIRECTOR | DESIGN METHODS ENGINEER

CIRCULAR AREA INTAKE

FIGURE 6010.512 SHEET 2 OF 2

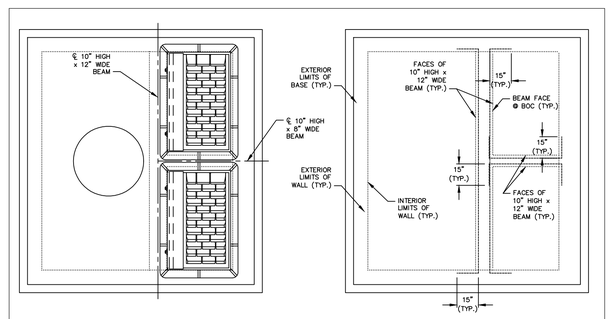

NOTES:
1. CONSTRUCT SIMILAR TO SW-503, EXCEPT FOR BEAMS.
2. REINFORCING STEEL IN BEAM CORNERS - 4-#8 BARS @ TWO (2") INCHES FROM EACH FACE.

DOUBLE GRATE INTAKE WITH MANHOLE

N.T.S.

GLYNN VILLAGE PLAT 10 - DETAILS 9

SCALE: AS NOTED	DESIGNED BY: JRK	DRAWN BY: PJV	
DWG: 15-013-DTL-1.dwg	CHECKED BY: DJS	DATE: 02/24/2016	
FIELD BOOK:	SHEET 95 OF 100	FILE NO.: 15-013	

LOCATION: | FOR:

NO.	REVISION	DATE	BY	FOR:

ERG
Engineering Resource Group, Inc.
Engineers and Surveyors
2413 GRAND AVENUE
DES MOINES, IOWA 50312
(515) 288-4823

15-013

J:\2015 Proj\15-013\DESIGN\15-013-DTL-1.dwg, 5/5/2016 10:29:52 AM, Jay

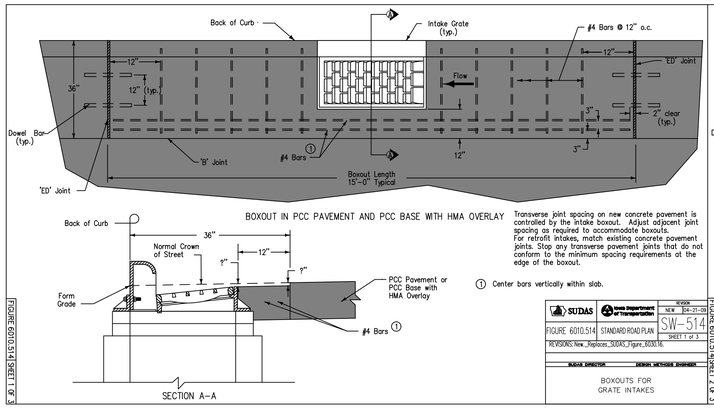

BOXOUT IN PCC PAVEMENT AND PCC BASE WITH HMA OVERLAY

Transverse joint spacing on new concrete pavement is controlled by the intake boxout. Adjust adjacent joint spacing as required to accommodate boxouts.
For retrofit intakes, match existing concrete pavement joints. Stop any transverse pavement joints that do not conform to the minimum spacing requirements at the edge of the boxout.

① Center bars vertically within slab.

SUDAS	Iowa Department of Transportation	REVISION NEW 04-21-09
FIGURE 6010.514	STANDARD ROAD PLAN	SW-514 SHEET 1 of 3
REVISIONS: New _Replaces_SUDAS_Figure_6030.16.		
SUDAS DIRECTOR	DESIGN METHODS ENGINEER	
BOXOUTS FOR GRATE INTAKES		

FIGURE 6010.514 SHEET 1 OF 3

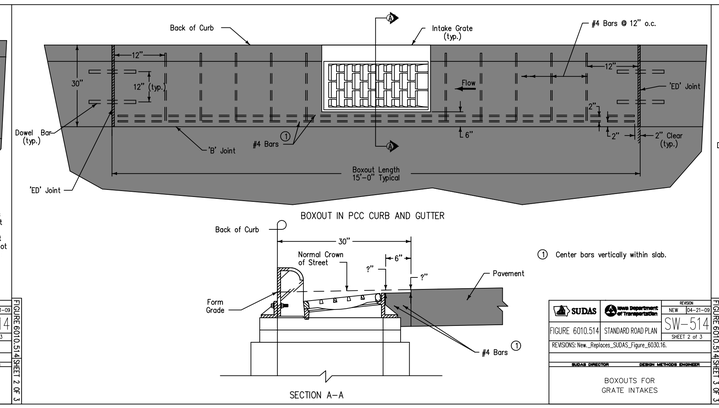

BOXOUT IN PCC CURB AND GUTTER

① Center bars vertically within slab.

SUDAS	Iowa Department of Transportation	REVISION NEW 04-21-09
FIGURE 6010.514	STANDARD ROAD PLAN	SW-514 SHEET 2 of 3
REVISIONS: New _Replaces_SUDAS_Figure_6030.16.		
SUDAS DIRECTOR	DESIGN METHODS ENGINEER	
BOXOUTS FOR GRATE INTAKES		

FIGURE 6010.514 SHEET 2 OF 3

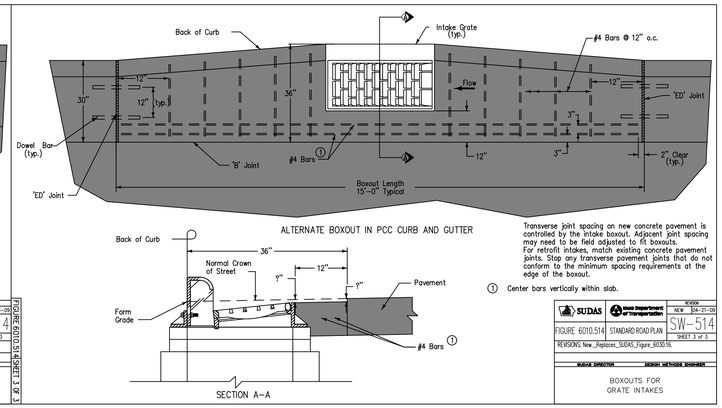

ALTERNATE BOXOUT IN PCC CURB AND GUTTER

Transverse joint spacing on new concrete pavement is controlled by the intake boxout. Adjacent joint spacing may need to be field adjusted to fit boxouts.
For retrofit intakes, match existing concrete pavement joints. Stop any transverse pavement joints that do not conform to the minimum spacing requirements at the edge of the boxout.

① Center bars vertically within slab.

SUDAS	Iowa Department of Transportation	REVISION NEW 04-21-09
FIGURE 6010.514	STANDARD ROAD PLAN	SW-514 SHEET 3 of 3
REVISIONS: New _Replaces_SUDAS_Figure_6030.16.		
SUDAS DIRECTOR	DESIGN METHODS ENGINEER	
BOXOUTS FOR GRATE INTAKES		

FIGURE 6010.514 SHEET 3 OF 3

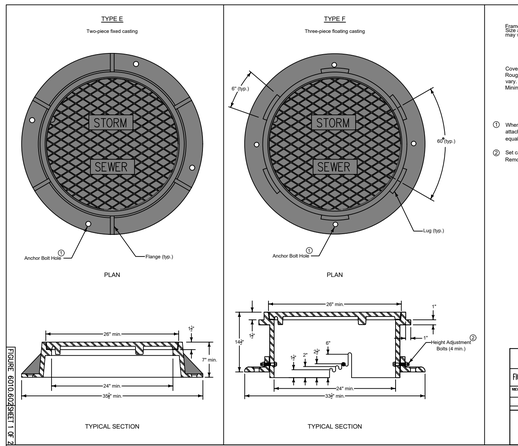

Frame Notes:
Size and spacing of lugs and flanges may vary.

Cover Notes:
Roughness pattern and text styles may vary.
Minimum one concealed pickhole.

① When the contract documents require the frame to be attached to the structure, drill four 7/8" diameter holes or slots, equally spaced around frame.

② Set casting at proper grade using one of the adjustment slots. Remove bolts upon completion of paving.

		REVISION 1 10-21-14
FIGURE 6010.602	STANDARDROADPLAN	SW-602 SHEET 1 of 2
REVISIONS: Added Type F casting. Added Anchor Bolt Hole. Added Flange. Added Lug.		
SUDAS DIRECTOR	DESIGN METHODS ENGINEER	
TEE-SECTION STORM SECTION MANHOLE		

FIGURE 6010.602 SHEET 1 OF 2

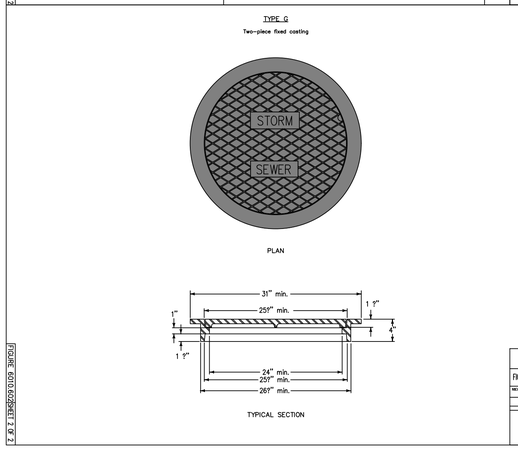

		REVISION 1 10-21-14
FIGURE 6010.602	STANDARDROADPLAN	SW-602 SHEET 2 of 2
REVISIONS: Added Type G casting. Added Anchor Bolt Hole. Added Flange. Added Lug.		
SUDAS DIRECTOR	DESIGN METHODS ENGINEER	
TEE-SECTION STORM SECTION MANHOLE		

FIGURE 6010.602 SHEET 2 OF 2

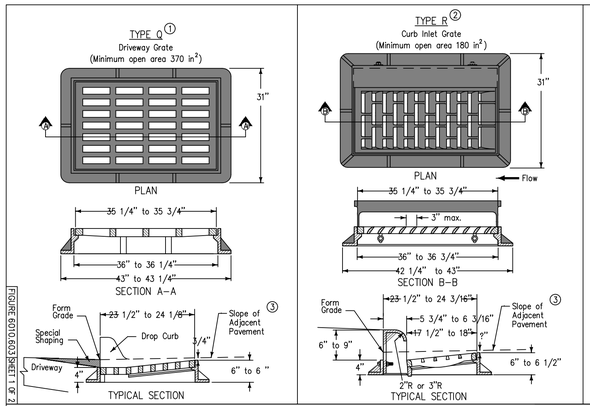

① For use at curb drops for driveways. Use only when specified in the contract documents.

② Provide bicycle-safe vane-style grate. At low points, grates with vanes facing both directions of flow are allowed.

③ For details of boxout pavement, refer to SW-514.

		REVISION 4 10-15-13
FIGURE 6010.603	STANDARD ROAD PLAN	SW-603 SHEET 1 of 2
REVISIONS: Changed dimensions on Type R drawings.		
SUDAS DIRECTOR	DESIGN METHODS ENGINEER	
CASTINGS FOR GRATE INTAKES		

FIGURE 6010.603 SHEET 1 OF 2

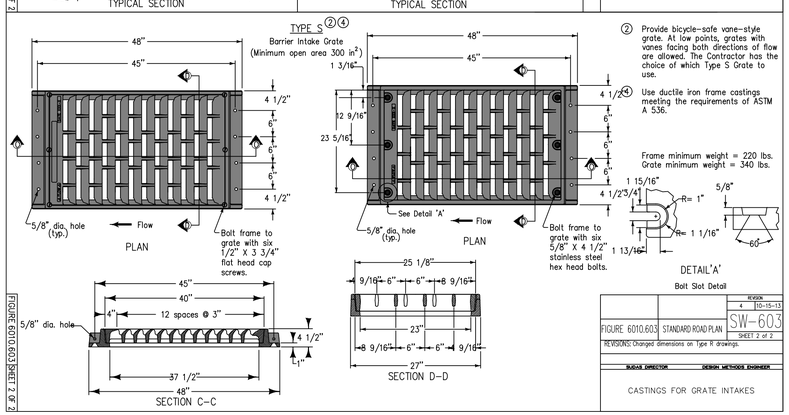

② Provide bicycle-safe vane-style grate. At low points, grates with vanes facing both directions of flow are allowed. The Contractor has the choice of which Type S Grate to use.

④ Use ductile iron frame castings meeting the requirements of ASTM A 536.

Frame minimum weight = 220 lbs.
Grate minimum weight = 340 lbs.

		REVISION 4 10-15-13
FIGURE 6010.603	STANDARD ROAD PLAN	SW-603 SHEET 2 of 2
REVISIONS: Changed dimensions on Type R drawings.		
SUDAS DIRECTOR	DESIGN METHODS ENGINEER	
CASTINGS FOR GRATE INTAKES		

FIGURE 6010.603 SHEET 2 OF 2

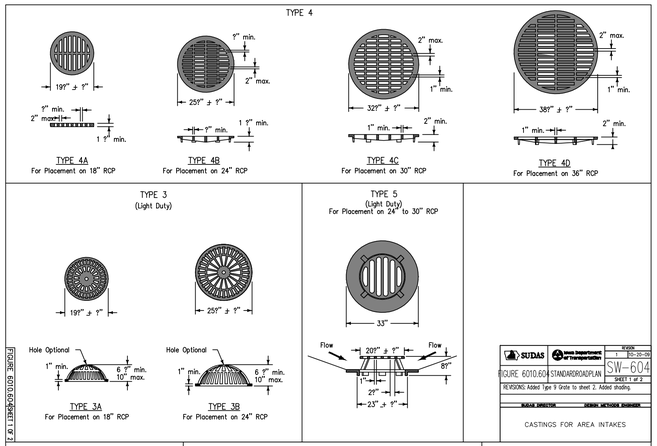

SUDAS	Iowa Department of Transportation	REVISION 1 10-20-09
FIGURE 6010.604	STANDARDROADPLAN	SW-604 SHEET 1 of 2
REVISIONS: Added Type 3 Grate to sheet 2. Added shading.		
SUDAS DIRECTOR	DESIGN METHODS ENGINEER	
CASTINGS FOR AREA INTAKES		

FIGURE 6010.604 SHEET 1 OF 2

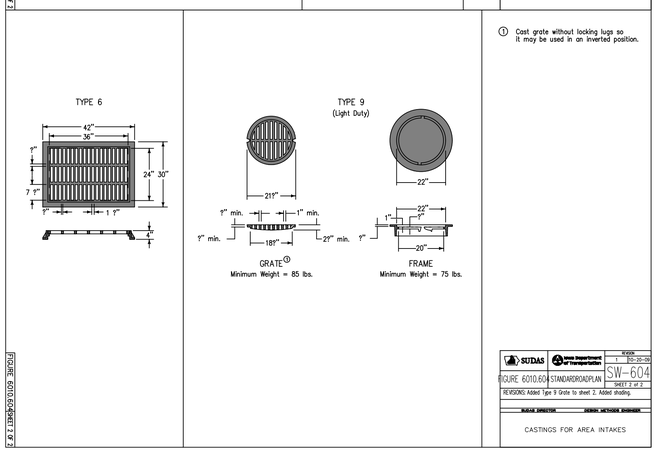

① Cast grate without locking lugs so it may be used in an inverted position.

SUDAS	Iowa Department of Transportation	REVISION 1 10-20-09
FIGURE 6010.604	STANDARDROADPLAN	SW-604 SHEET 2 of 2
REVISIONS: Added Type 9 Grate to sheet 2. Added shading.		
SUDAS DIRECTOR	DESIGN METHODS ENGINEER	
CASTINGS FOR AREA INTAKES		

FIGURE 6010.604 SHEET 2 OF 2

GLYNN VILLAGE PLAT 10 - DETAILS 10

LOCATION:	SCALE: AS NOTED	DESIGNED BY: JRK	DRAWN BY: PJV
	DWG: 15-013-DTL-1.dwg	CHECKED BY: DJS	DATE: 02/24/2016
	FIELD BOOK:	SHEET 96 OF 100	FILE NO.: 15-013

NO.	REVISION	DATE	BY	FOR:

ERG
Engineering Resource Group, Inc.
Engineers and Surveyors
2413 GRAND AVENUE
DES MOINES, IOWA 50312
(515) 288-4823

15-013

J:\2015 Proj\15-013\DESIGN\15-013-DTL-1.dwg, 5/5/2016 10:29:57 AM, Jay

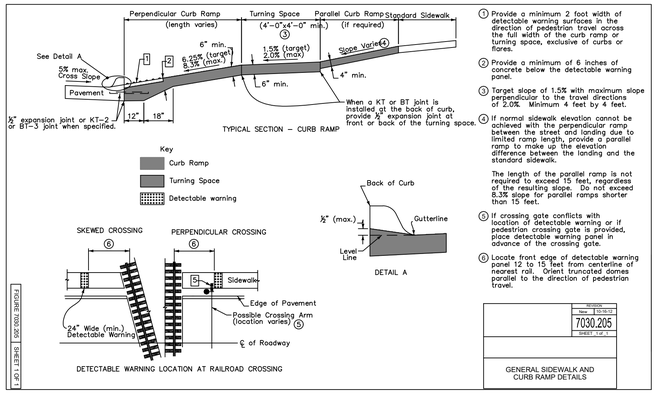

1. Provide a minimum 2 foot width of detectable warning surfaces in the direction of pedestrian travel across the full width of the curb ramp or turning space, exclusive of curbs or flares.
2. Provide a minimum of 6 inches of concrete below the detectable warning panel.
3. Target slope of 1.5% with maximum slope perpendicular to the travel directions of 2.0%. Minimum 4 feet by 4 feet.
4. If normal sidewalk elevation cannot be achieved with the perpendicular ramp between the street and landing due to limited ramp length, provide a parallel ramp to make up the elevation difference between the landing and the standard sidewalk.

   The length of the parallel ramp is not required to exceed 15 feet, regardless of the resulting slope. Do not exceed 8.3% slope for parallel ramps shorter than 15 feet.
5. If crossing gate conflicts with location of detectable warning or if pedestrian crossing gate is provided, place detectable warning panel in advance of the crossing gate.
6. Locate front edge of detectable warning panel 12 to 15 feet from centerline of nearest rail. Orient truncated domes parallel to the direction of pedestrian travel.

REVISION	
New	10-19-10
7030.205	
SHEET 1 OF 1	

GENERAL SIDEWALK AND CURB RAMP DETAILS

FIGURE 7030.205 SHEET 1 OF 1

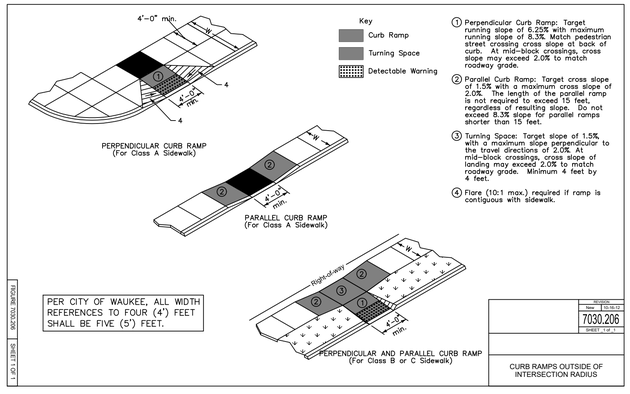

1. Perpendicular Curb Ramp: Target running slope of 6.25% with maximum running slope of 8.3%. Match pedestrian street crossing cross slope at back of curb. At mid-block crossings, cross slope may exceed 2.0% to match roadway grade.
2. Parallel Curb Ramp: Target cross slope of 1.5% with a maximum cross slope of 2.0%. The length of the parallel ramp is not required to exceed 15 feet, regardless of resulting slope. Do not exceed 8.3% slope for parallel ramps shorter than 15 feet.
3. Turning Space: Target slope of 1.5% with a maximum slope perpendicular to the travel directions of 2.0%. At mid-block crossings, cross slope of landing may exceed 2.0% to match roadway grade. Minimum 4 feet by 4 feet.
4. Flare (10:1 max.) required if ramp is contiguous with sidewalk.

PER CITY OF WAUKEE, ALL WIDTH REFERENCES TO FOUR (4') FEET SHALL BE FIVE (5') FEET.

REVISION	
New	10-19-10
7030.206	
SHEET 1 OF 1	

CURB RAMPS OUTSIDE OF INTERSECTION RADIUS

FIGURE 7030.206 SHEET 1 OF 1

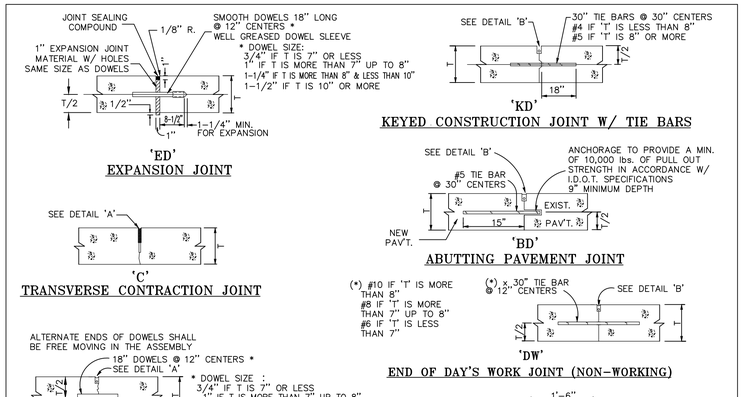

NOTE:

1. APPROVED DOWEL ASSEMBLIES SHALL BE USED FOR ALL 'ED' & 'CD' JOINT
2. ALL LOAD TRANSFER DEVICES AND TIE BARS SHALL BE POSITIONED ON CHAIRS AND SECURED AGAINST MOVEMENT WITH METAL STAKES DURING PLACING AND FINISHING OF CONCRETE.
3. ALL REINFORCING STEEL RODS, DOWELS OR TIE BARS USED IN THE PCC PAVING SHALL BE EPOXY-COATED.
4. BACKER ROD IS OPTIONAL OUTSIDE OF RIGHT-OF-WAY; CANNOT BE USED WITHIN LIMITS OF RIGHT-OF-WAY.

NON-REINFORCED CONCRETE PAVEMENT JOINTS

NOT TO SCALE

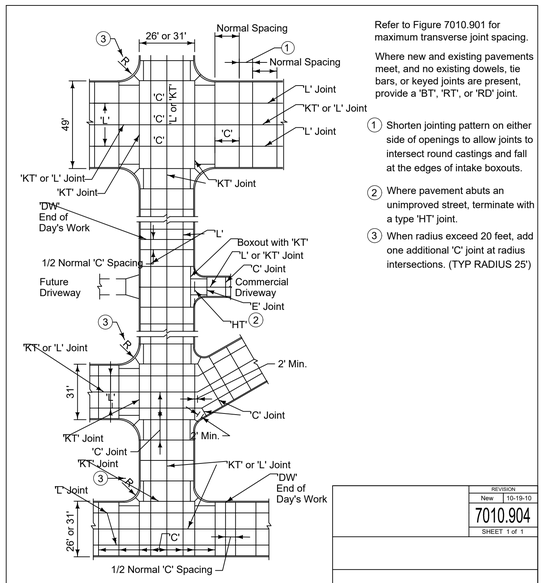

Refer to Figure 7010.901 for maximum transverse joint spacing.

Where new and existing pavements meet, and no existing dowels, tie bars, or keyed joints are present, provide a 'BT', 'RT', or 'RD' joint.

1. Shorten jointing pattern on either side of openings to allow joints to intersect round castings and fall at the edges of intake boxouts.
2. Where pavement abuts an unimproved street, terminate with a type 'HT' joint.
3. When radius exceed 20 feet, add one additional 'C' joint at radius intersections. (TYP RADIUS 25')

REVISION	
New	10-19-10
7010.904	
SHEET 1 of 1	

TYPICAL JOINTING LAYOUT

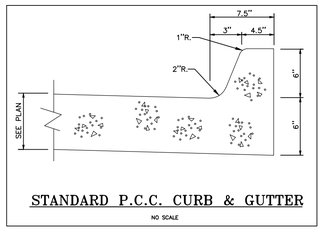

STANDARD P.C.C. CURB & GUTTER

NO SCALE

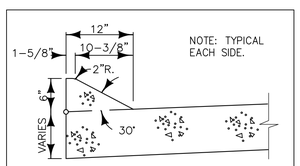

INTEGRAL 6" SLOPED CURB

NOT TO SCALE

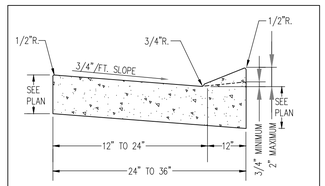

NOTES:
1. THE BOTTOM OF THE CURB AND GUTTER MAY BE CONSTRUCTED EITHER LEVEL OR PARALLEL TO THE SLOPE OF THE SUBGRADE OR BASE COURSE, PROVIDING THE MINIMUM GUTTER THICKNESS (PLAN) IS MAINTAINED.

STANDARD P.C.C. DRIVEWAY OPENING, GUTTER, AND SIDEWALK RAMP

NO SCALE

NOTE: TYPICAL RADII, UNLESS OTHERWISE NOTED.

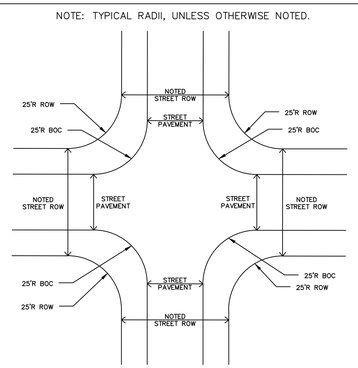

TYPICAL INTERSECTION RIGHT-OF-WAY (ROW) DETAIL

NOT TO SCALE

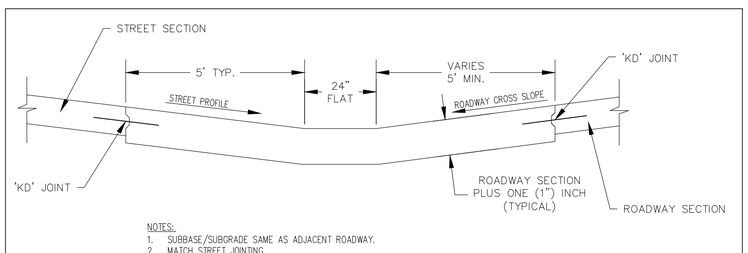

NOTES:
1. SUBBASE/SUBGRADE SAME AS ADJACENT ROADWAY.
2. MATCH STREET JOINTING.

VALLEY GUTTER

NO SCALE

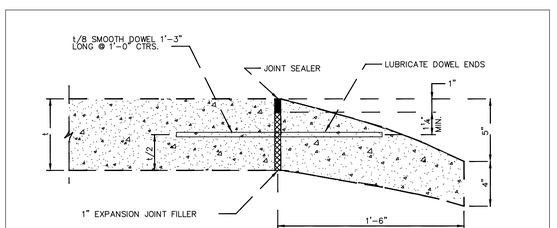

CONCRETE HEADER

NOTE
1. t = PAVEMENT THICKNESS IN INCHES; AS SPECIFIED.

CITY OF WAUKEE

HEADER DETAILS

STD.DWG.NO.24

97

GLYNN VILLAGE PLAT 10 - DETAILS II

LOCATION:	SCALE: AS NOTED	DESIGNED BY: JRK	DRAWN BY: PJV
	DWG: 15-013-DTL-1.dwg	CHECKED BY: DJS	DATE: 02/24/2016
	FIELD BOOK:	SHEET 97 OF 100	FILE NO.: 15-013

NO.	REVISION	DATE	BY	FOR:

ERG
Engineering Resource Group, Inc.
Engineers and Surveyors
2413 GRAND AVENUE
DES MOINES, IOWA 50312
(515) 288-4823

15-013

J:\2015 Proj\15-013\DESIGN\15-013-DTL-1.dwg, 5/5/2016 10:30:08 AM, Jay

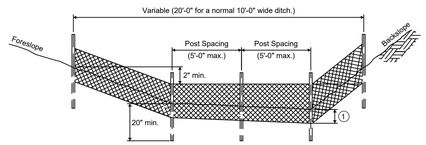

TYPICAL SILT FENCE DITCH CHECK

1 Insert 12 inches of fabric a minimum of 6 inches deep (fabric may be folded below the ground line).

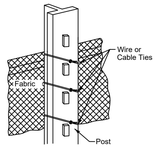

ATTACHMENT TO POST

REVISION	
2	10-21-14

9040.119

SHEET 1 of 2

SILT FENCE

FIGURE 9040.119 SHEET 1 OF 2

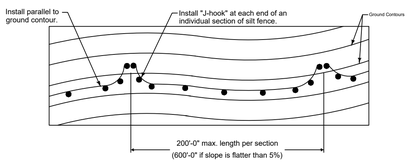

TYPICAL SILT FENCE INSTALLATION ON LONGITUDINAL SLOPES
(Plan View)

1 Insert 12 inches of fabric a minimum of 6 inches deep (fabric may be folded below the ground line).

2 Reduce post spacing to 5'-0" at water concentration areas, or as required to adequately support fence.

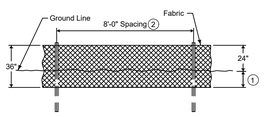

DETAILS OF SILT FENCE ON LONGITUDINAL SLOPES

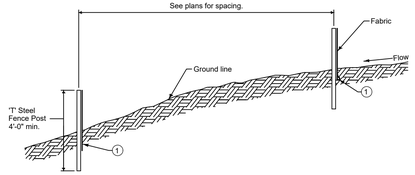

TYPICAL SILT FENCE INSTALLATION ON LONGITUDINAL SLOPES
(Profile View)

REVISION	
1	10-21-14

9040.119

SHEET 2 of 2

SILT FENCE

FIGURE 9040.119 SHEET 2 OF 2

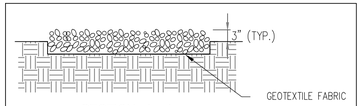

SECTION A–A
N.T.S.

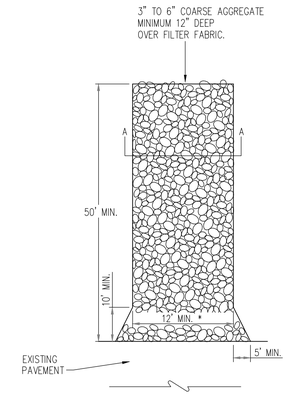

* MUST EXTEND FULL WIDTH OF INGRESS AND EGRESS OPENING.

NOTES:

1. TRACKING ENTRANCE SHALL BE INSPECTED DAILY. DEFICIENT AREAS SHALL BE REPAIRED OR REPLACED IMMMEDIATELY. THIS WORK SHALL BE INCIDENTIAL TO THE CONTRACT.

2. STONE SHALL BE REMOVED AND REPLACED WHEN SOIL FILLS OPENINGS AND/OR DIRECTED BY THE ENGINEER. THIS WORK SHALL BE INCIDENTIAL TO THE CONTRACT.

3. EXISTING PAVEMENT SHALL BE INSPECTED AND CLEANED AT LEAST DAILY. THIS WORK SHALL BE INCIDENTIAL TO THE CONTRACT.

VEHICULAR TRACKING ENTRANCE
N.T.S.
(A.K.A. – CONSTRUCTION ENTRANCE, ROCK STABILIZED ENTRANCE, ETC.

SILT FENCE SPACING ON SLOPES	
SLOPE	HORIZONTAL INTERVAL
≤ 10:1 (10%)	100 FEET (MAXIMUM)
5:1 (20%)	60 FEET (MAXIMUM)
4:1 (25%)	50 FEET (MAXIMUM)
3:1 (33.3%)	40 FEET (MAXIMUM)

SILT FENCE SPACING IN SWALE	
SWALE GRADE	HORIZONTAL INTERVAL
1% TO 2%	150 FEET (MAXIMUM)
2% TO 4%	75 FEET (MAXIMUM)
4% TO 6%	40 FEET (MAXIMUM)
OVER 6%	25 FEET (MAXIMUM)

DITCH CHECK/CHECK DAM SPACING		
SWALE/DITCH GRADE	DESIGN HORIZ. INTERVAL	ACTUAL HORIZ. INTERVAL
1% TO 2%	200 FEET TO 100 FEET	150 FEET (MAXIMUM)
2% TO 4%	100 FEET TO 50 FEET	75 FEET (MAXIMUM)
4% TO 6%	50 FEET TO 33.5 FEET	40 FEET (MAXIMUM)
OVER 6%	(2 FEET)/(SLOPE, FT/FT)	25 FEET (MAXIMUM)

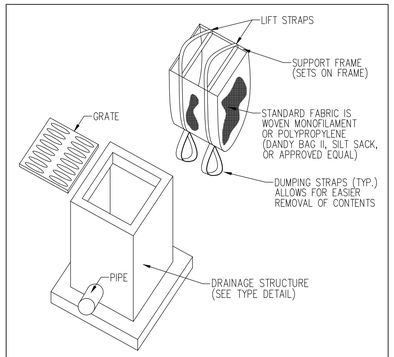

INLET PROTECTION INSERT (PAVED AREAS)
N.T.S.

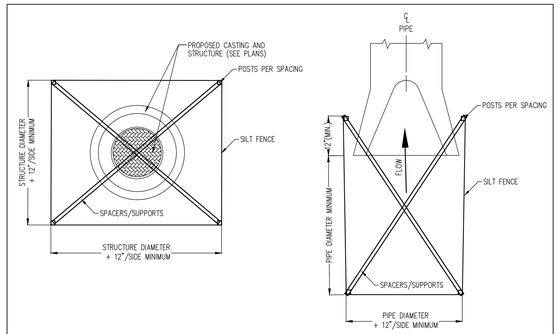

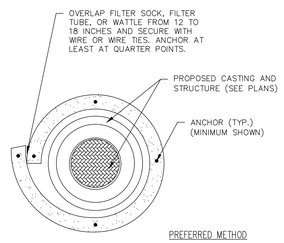

PREFERRED METHOD

INLET AND PIPE PROTECTION
N.T.S.

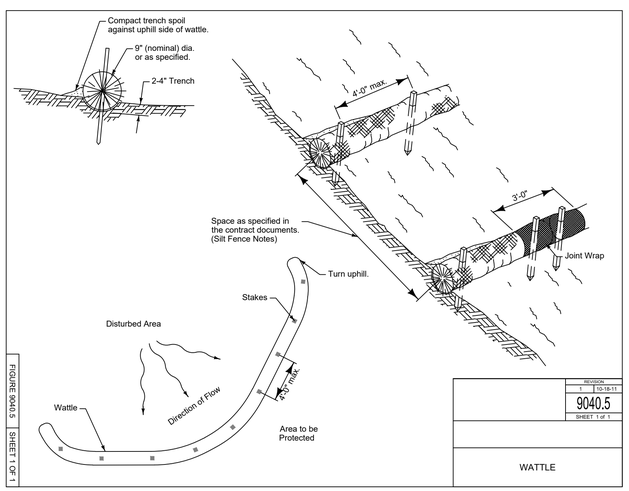

REVISION	
1	10-18-11

9040.5

SHEET 1 of 1

WATTLE

FIGURE 9040.5 SHEET 1 OF 1

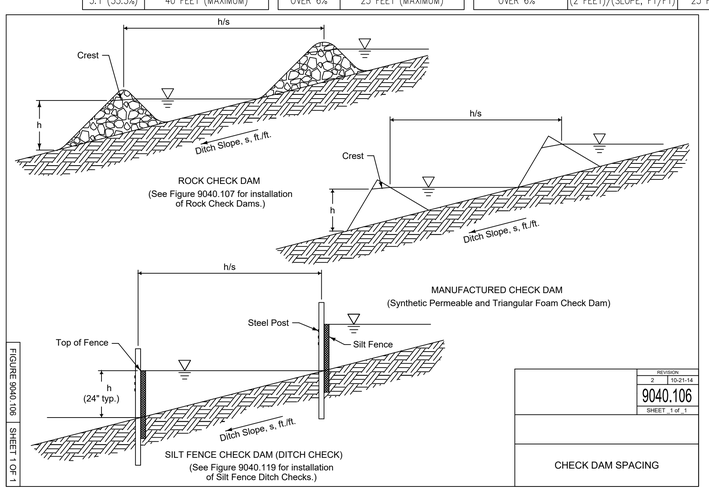

REVISION	
2	10-21-14

9040.106

SHEET 1 of 1

CHECK DAM SPACING

FIGURE 9040.106 SHEET 1 OF 1

–IMPORTANT–

EROSION AND SEDIMENT CONTROLS MUST BE ROUTINELY INSPECTED AT LEAST EVERY SEVEN (7) DAYS. WEEKLY WRITTEN REPORTS OF ALL INSPECTIONS MUST BE MAINTAINED BY THE CONTRACTOR(S); AND SUBMITTED WEEKLY TO THE CITY. THE REPORT MUST MINIMALLY CONTAIN THE FOLLOWING INFORMATION:

A. DATE, TIME, AND EXACT PLACES OF INSPECTION;
B. NAME(S) OF INDIVIDUAL(S) PERFORMING INSPECTION;
C. AN ASSESSMENT OF THE CONDITION OF EROSION AND SEDIMENT CONTROLS;
D. A DESCRIPTION OF ANY EROSION AND SEDIMENT CONTROL IMPLEMENTATION AND MAINTENANCE PERFORMED;
E. A DESCRIPTION OF THE SITE'S PRESENT PHASE OF CONSTRUCTION.

GLYNN VILLAGE PLAT 10 - DETAILS 12

SCALE: AS NOTED	DESIGNED BY: JRK	DRAWN BY: PJV	
DWG: 15-013-DTL-1.dwg	CHECKED BY: DJS	DATE: 02/24/2016	
FIELD BOOK:	SHEET 98 OF 100	FILE NO.: 15-013	

LOCATION:

NO.	REVISION	DATE	BY	FOR:

ERG
Engineering Resources Group, Inc.
Engineers and Surveyors
2413 GRAND AVENUE
DES MOINES, IOWA 50312
(515) 288-4823

15-013

J:\2015 Proj\15-013\DESIGN\15-013-DTL-1.dwg, 5/5/2016 10:30:12 AM, Jay

SEE 'GRADING AND STORM' SHEET 70 FOR SIZE AND LOCATION

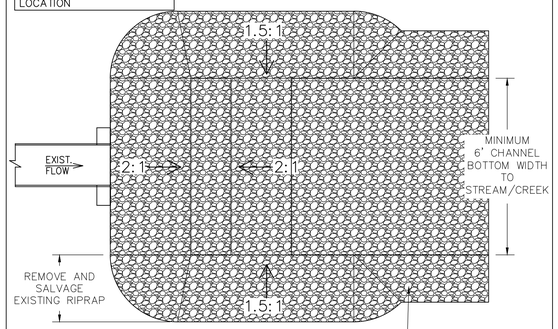

EXISTING SMF 'EAST/8E' DIKE PLUNGE BASIN PLAN

NOT TO SCALE

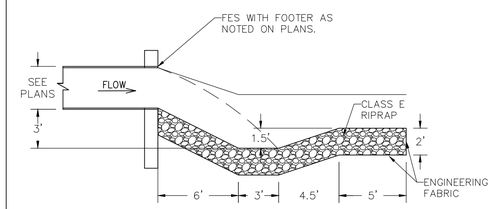

SMF 'EAST/8E' DIKE PLUNGE BASIN SECTION

NOT TO SCALE

NOTE:
ALL DISTURBED AREAS SHALL BE COVERED IN RIPRAP.

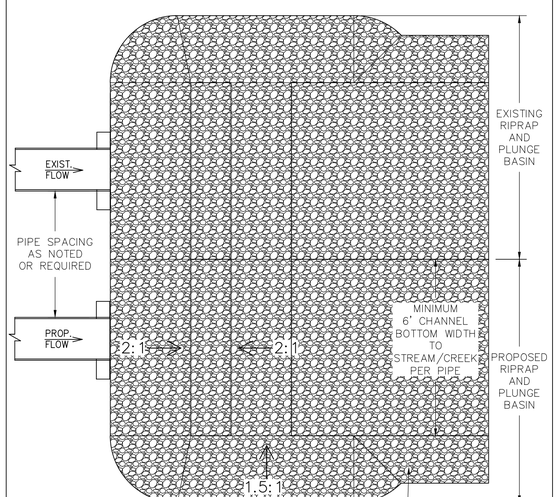

PROPOSED SMF 'EAST/8E' DIKE PLUNGE BASIN PLAN

NOT TO SCALE

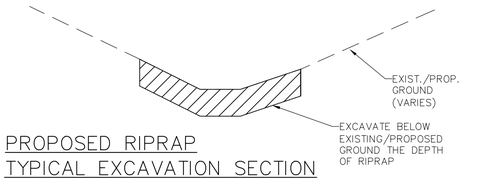

PROPOSED RIPRAP TYPICAL EXCAVATION SECTION

NOT TO SCALE

NOTES:
1. SEE SUDAS STANDARD DETAILS ON THIS SHEET FOR ADDITIONAL INFORMATION.
2. SEE 'GRADING' SHEETS 5 TO 10, INCLUSIVE, AND 'STORM' SHEETS 26 TO 71, INCLUSIVE, FOR SIZES AND LOCATIONS.

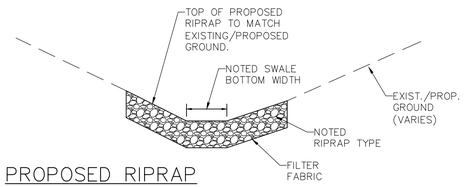

PROPOSED RIPRAP TYPICAL PLACEMENT SECTION

NOT TO SCALE

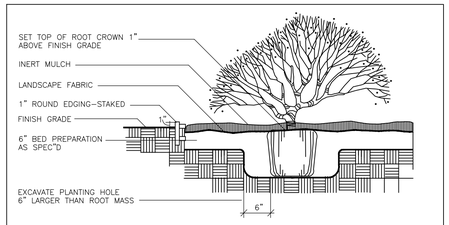

3 — SHRUB PLANTING

NOT TO SCALE

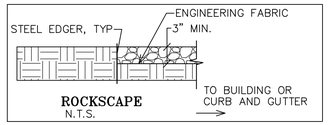

ROCKSCAPE
N.T.S.

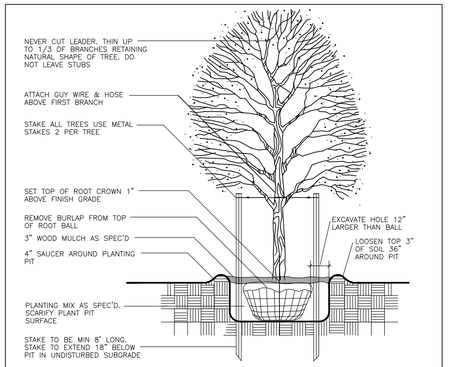

TREE PLANTING

NOT TO SCALE

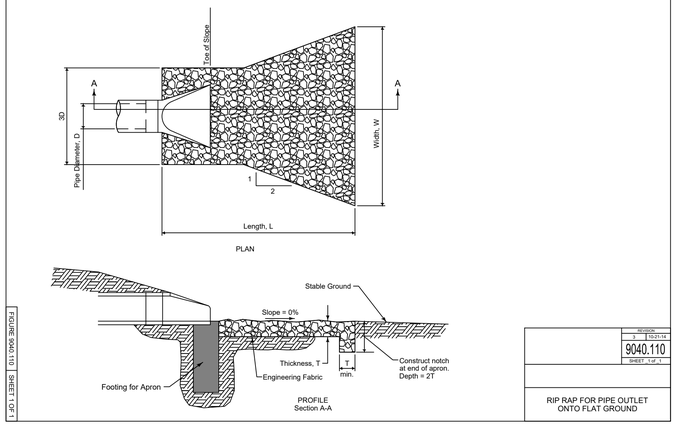

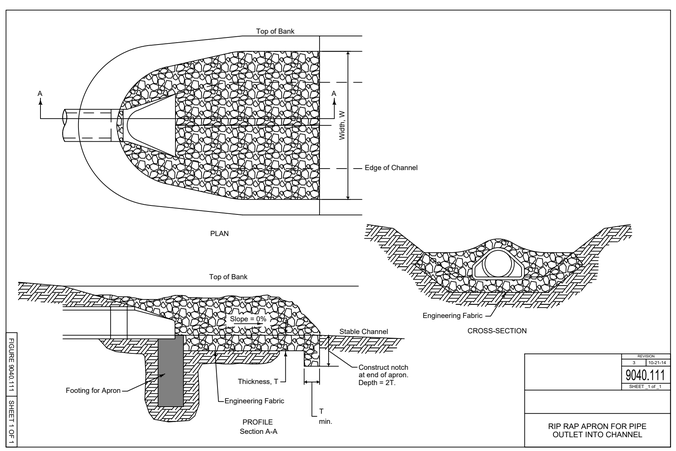

GLYNN VILLAGE PLAT 10 - DETAILS 13

LOCATION:	SCALE: AS NOTED	DESIGNED BY: JRK	DRAWN BY: PJV
	DWG: 15-013-DTL-1.dwg	CHECKED BY: DJS	DATE: 02/24/2016
	FIELD BOOK:	SHEET 99 OF 100	FILE NO.: 15-013

NO.	REVISION	DATE	BY	FOR:

ERG
Engineering Resource Group, Inc.
Engineers and Surveyors
2413 GRAND AVENUE
DES MOINES, IOWA 50312
(515) 288-4823

15-013

J:\2015 Proj\15-013\DESIGN\15-013-DTL-1.dwg, 5/5/2016 10:30:17 AM, Jay

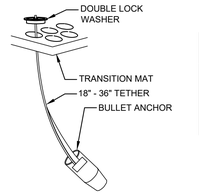

PIPE DIAMETER	DISCHARGE (CFS)	SCOURSTOP WIDTHxLENGTH
12"	8	4' x 4'
24"	30	4' x 8'
36"	75	8' x 12'
48"	100	12' x 16'
60"	150	12' x 20'
72"+		SEE DETAILS

SHORELINE PROTECTION:

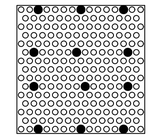

ANCHOR CONFIGURATION FOR SLOPES STEEPER THAN 5:1, TRANSITION MATS OVER A MINIMUM 8 OZ. GEOTEXTILE

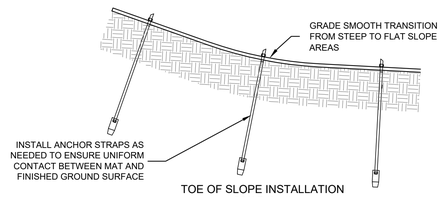

TOE OF SLOPE INSTALLATION
SCALE 1" = 1'

ADD EXTRA ANCHORS IF NECESSARY TO ENSURE CONSISTENT CONTACT WITH SOIL, OR IMPROVE SOIL SURFACE SMOOTHNESS.

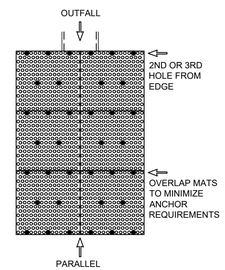

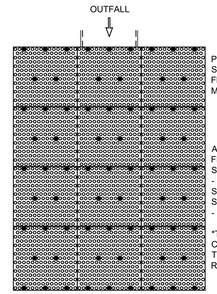

POSITION ANCHORS TO SECURE SCOURSTOP MATS FLUSH WITH SOIL SURFACE. MINIMIZE GAPS OR BRIDGING.

ANCHOR REQUIREMENTS*:
FIRST ROW OF SCOURSTOP MATS
- MINIMUM OF 8 ANCHORS
SECOND ROW OF SCOURSTOP MATS
- MINIMUM OF 5 ANCHORS

*TO ACHIEVE CONSISTENT CONTACT WITH THE SOIL, EXCEED THE MINIMUM ANCHOR REQUIREMENT AT INSTALLATION.

TURF REINFORCEMENT MAT INSTALLED OVER SOD:
- TRIM INSTALLED SOD TO 1" HEIGHT. INSTALL TRM OVER INSTALLED SOD. STRETCH TRM TIGHTLY ACROSS INSTALLATION SURFACE AREA. INSTALL STAPLES AT MAXIMUM OF 18" APART (450 MM). IRRIGATE SOD AS NEEDED AFTER INSTALLATION TO AID IN ESTABLISHMENT OF VEGETATION.
- SOD DOWNSTREAM OF MAT INSTALLATION AREA DOES NOT NEED TRIMMED BEFORE MAT INSTALLATION.
- TO HOLD SOD IN PLACE DOWNSTREAM OF TM'S, INSTALL WIRE STAPLES AT 8" O.C. WITHIN 4" OF UPSTREAM EDGE OF SOD, AND AT A RATE OF ONE STAPLE PER SQUARE FOOT STAGGERED THROUGHOUT.

==> FOR DESIGN INFORMATION, REFER TO "DESIGN METHODOLOGY" DOCUMENT AVAILABLE AT www.scourstop.com.

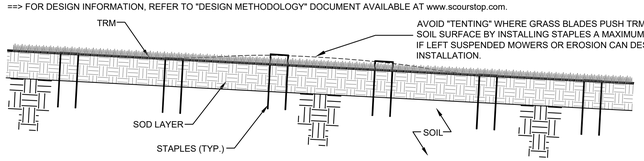

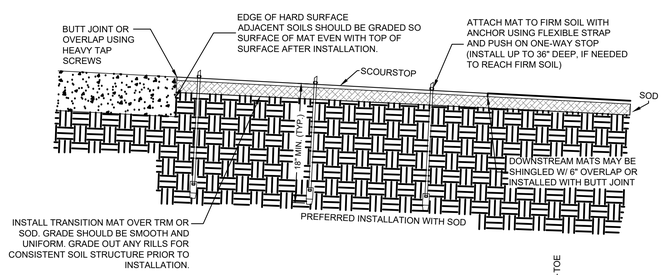

MINIMUM TRANSITION MAT COVERAGE FOR OCCASIONAL-OVERFLOW STRUCTURES
SCALE 1" = 2'

LIMITATIONS FOR OCCASIONAL OVERFLOW STRUCTURES:
- MAXIMUM FLOW VELOCITY 21 FPS.
- MAXIMUM FLOW VOLUME 15 CFS/FOOT OF CHANNEL WIDTH.
- A SOIL COVER BMP (SOD, TRM, ETC.) IS REQUIRED UNDER TRANSITION MATS.
- ADDITION OF TRM OVER SOD ADDS SAFETY FACTOR OF 1.5.
- ADD ADDITIONAL ANCHORS AT TOE INSTALLATIONS ON LONGER SLOPES TO PROTECT AGAINST HIGHER RUNOFF VELOCITIES.

==> FOR DESIGN INFORMATION, REFER TO "DESIGN METHODOLOGY" DOCUMENT AVAILABLE AT www.scourstop.com.

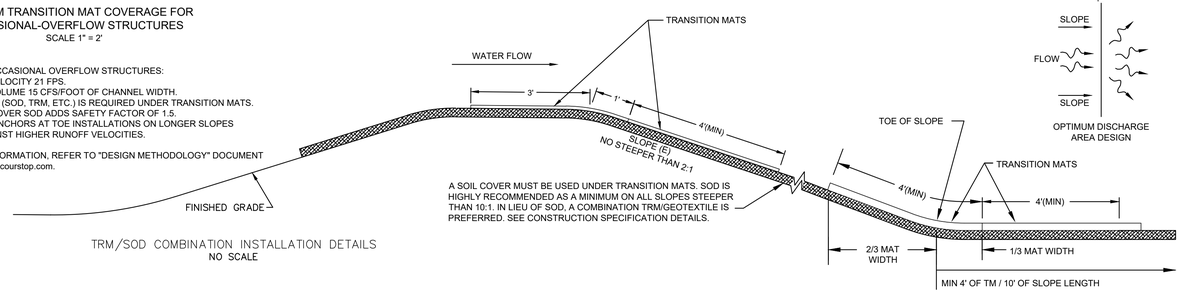

TRM/SOD COMBINATION INSTALLATION DETAILS
NO SCALE

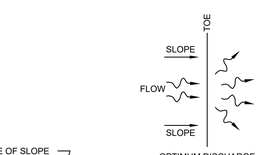

OPTIMUM DISCHARGE AREA DESIGN

MINIMUM TRANSITION MAT COVERAGE FOR SLOPES DOWNSTREAM OF OUTFALL
SCALE 1" = 2'

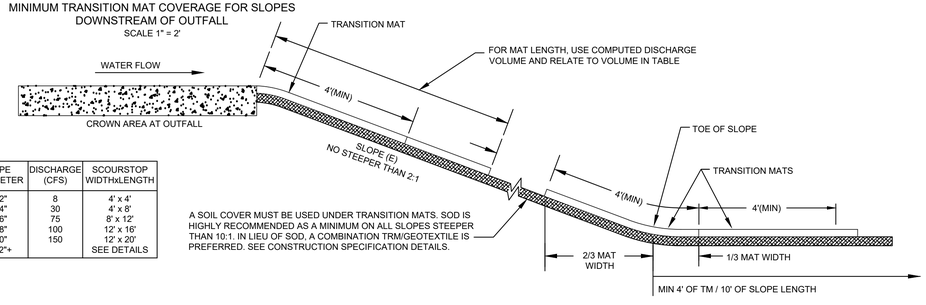

PIPE DIAMETER	DISCHARGE (CFS)	SCOURSTOP WIDTHxLENGTH
12"	8	4' x 4'
24"	30	4' x 8'
36"	75	8' x 12'
48"	100	12' x 16'
60"	150	12' x 20'
72"+		SEE DETAILS

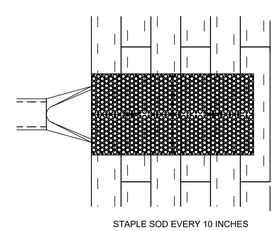

STAPLED SOD DETAILS
NO SCALE

NOT TO SCALE

SCOURSTOP TRANSITION MAT APPLICATIONS:

1. INTENDED AS AN BIOTECHNICAL REPLACEMENT FOR RIP-RAP. THIS IS AN ENGINEERED SYSTEM. UTILIZE PROPER DESIGN PRACTICES FOR LONG-TERM EFFECTIVE PERFORMANCE.
2. CAN BE PLACED ON DOWNSTREAM OUTLET SIDE OF CURB CUTS, OVERFLOW STRUCTURES, ENDS OF CONCRETE FLUMES OR PIPE FIXTURES; AS STREAM BANK AND SHORELINE PROTECTION.
3. SCOURSTOP STANDARD SIZE IS 4' X 4' X ½" SHEET WITH MULTIPLE VOIDS FOR VEGETATION GROWTH, PROVIDING SOIL PROTECTION FOR:
   3.1. THE SUSCEPTIBLE, EROSIVE AREA DIRECTLY BELOW OUTFALLS
   3.2. ANY HIGHLY EROSIVE AREA; 3) SHORELINE AND STREAMBANKS.
4. PRIMARY BENEFITS OVER RIPRAP ARE: UTILIZATION OF VEGETATION, LOWER INSTALLATION COSTS, LOWER LONG TERM MAINTENANCE, AESTHETICALLY PLEASING, AND IMPROVED SAFETY.

PREFERRED INSTALLATION SPECIFICATIONS:

1. READ AND UNDERSTAND INSTALLATION GUIDE.
2. FOR EACH INSTALLATION, COMPLETE INSTALLER'S CHECKLIST AND PROVIDE TO GENERAL CONTRACTOR FOR PAYMENT.
3. FOR VEGETATION, INSTALL APPROPRIATE SOIL UNDER THESE INSTALLATIONS TO IMPROVE THE GROWING ENVIRONMENT.
4. MINIMUM APPLICATION IS FOUR (4) FOOT LENGTH. UTILIZE DESIGNER CHECKLIST FOR PROPER DESIGN AND INSTALLATION MODE.
5. REMOVE AND REPLACE SATURATED SOILS FOR A SOLID BASE. USE SUB-SURFACE DRAIN FOR TRICKLE FLOWS.
6. CAN BE INSTALLED AS A BUTT JOINT, OR PERMANENTLY ATTACHED TO THE HARD SURFACE.
7. AVOID EROSIVE IMPACT CONDITIONS AT SCOUR AREA.
8. ENSURE LOCATION HAS ADEQUATE SUNLIGHT FOR HEALTHY VEGETATION, OTHERWISE UTILIZE THE HP-TRM INSTALLATION.
9. SCOURSTOP SHALL NOT BE INSTALLED OVER BARE SOIL. OPTIONAL SOIL COVERS ARE SOD, TRM'S, AND GEOTEXTILES. SOIL COVERS MAY NEED TO EXTEND DOWNSTREAM OF SCOURSTOP INSTALLATION IN AREAS OF HIGHER VELOCITY OR SHEAR (CHECK WITH DESIGNER PRIOR TO INSTALLATION).
10. WHERE EXCESS CONCRETE FROM THE END SECTION FOOTINGS EXTENDS BEYOND THE END SECTION, INSERT A FILLER MATERIAL (LIKE A HIGH-PERFORMANCE TRM OR HEAVY GEOTEXTILE) BETWEEN THE TRANSITION MAT AND THE EXCESS CONCRETE SURFACE TO FILL THE AREA TOO SHALLOW (<4 INCHES) TO SUPPORT SOIL AND VEGETATION GROWTH.
11. CONSTRUCT DOWNSTREAM CHANNEL AT LEAST TWICE THE WIDTH OF THE OUTLET. CONSTRUCT WIDTH AS FLAT AND LEVEL AS POSSIBLE FOR PROPER DRAINAGE.
12. SOIL ANCHORS SHALL BE DRIVEN AT LEAST 18 INCHES DEEP, OR DEEPER AS NEEDED INTO FIRM SOIL. USE FLEXIBLE STRAPPING AND DOUBLE-LOCK WASHERS TO ATTACH THE TRANSITION MAT INSTALLATION INTO THE SOIL. FIRMLY PULL STRAP TO SNUG THE TRANSITION MAT DOWN AGAINST THE SOIL WITH THE WASHER AND ONE-WAY STOP. A 3-2-3 ANCHOR CONFIGURATION IS THE MINIMUM ANCHOR QUANTITY.
13. PER NPDES PHASE II, THE DOWNSTREAM CHANNEL (D.C.) MUST BE PROTECTED FOR ITS ENTIRE LENGTH. THIS D.C. IS PART OF THE TRANSITION MAT ENGINEERED SYSTEM. USE SOD TO PROTECT THE D.C. WHEN POSSIBLE. SEE DETAILS PAGE FOR PROPER INSTALLATION. TURF REINFORCEMENT MATS (TRM'S) ARE ACCEPTABLE. TRM'S HAVE LOW PERFORMANCE RATINGS WHEN UNVEGETATED - DESIGN APPROPRIATELY.
14. ON AREAS OF SLOPE TRANSITION, UTILIZE ANCHORS TO MAINTAIN SOIL CONTACT ACROSS ENTIRE MAT LENGTH. ANCHORS CAN BE USED TO PROVIDE UP TO 14" OF DEFLECTION AT CENTER OF MAT FROM ENDS.
15. TYPE "A" INSTALLATION INSTRUCTIONS
    15.1. DESIGN OUTLET VELOCITY < 21 FPS AND DOWNSTREAM SCOUR AREA FLATTER THAN 10%, OR 10:1.
    15.2. SOD IS THE SOIL COVER PRACTICE UNDER THE TRANSITION MATS - WIDTH AND LENGTH OF TM'S SPECIFIED BY DESIGNER. SOD ELIMINATES GERMINATION RISK, AND IS GREAT PROTECTION FOR SOIL.
16. TYPE "B" INSTALLATION INSTRUCTIONS
    16.1. DESIGN OUTLET VELOCITY < 21 FPS AND DOWNSTREAM SCOUR AREA STEEPER THAN 10%, OR 10:1.
    16.2. SOD TRIMMED AND COVERED BY AN OPEN-WEAVE TRM IS THE SOIL COVER PRACTICE UNDER THE TRANSITION MATS - WIDTH AND LENGTH OF TM'S TO BE SPECIFIED BY DESIGNER. ADDITIONAL TRANSITION MATS ARE REQUIRED AT THE TOE OF THE SLOPE. SEE DETAILS.
    16.3. TRIM INSTALLED SOD TO ONE (1) TO TWO (2) INCH HEIGHT. INSTALL TRM OVER INSTALLED SOD AND STRETCH TIGHTLY BEFORE STAPLING. IRRIGATE SOD AS NEEDED AFTER INSTALLATION TO AID IN ESTABLISHMENT OF VEGETATION.
    16.4. ANCHOR SOD/TRM COMBINATION WITH 8-INCH STAPLES A MAXIMUM OF 18 INCHES APART.
17. TYPE "C" INSTALLATION INSTRUCTIONS
    17.1. DESIGN OUTLET VELOCITY < 8 FPS AND DOWNSTREAM SCOUR AREA FLATTER THAN 4%, OR 25:1.
    17.2. A TRM IS THE SOIL COVER PRACTICE UNDER THE TRANSITION MATS. THE WIDTH AND LENGTH OF THE TM'S TO BE SPECIFIED BY DESIGNER. TRM'S OVER BARE SOIL HAVE LOW-PERFORMANCE UNTIL VEGETATED.
18. TYPE "D" INSTALLATION INSTRUCTIONS
    18.1. DESIGN APPLICATIONS: ALL OUTFALLS; LOW SUNLIGHT AREAS; SEMI-ARID REGIONS; WHERE VEGETATION MAY BE SLOW TO ESTABLISH.
    18.2. A THREE (3) OUNCE GEOTEXTILE COVERED WITH A HIGH-PERFORMANCE TRM IS THE PREFERRED SOIL COVER PRACTICE. THE WIDTH AND LENGTH OF THE TM'S TO BE SPECIFIED BY DESIGNER. THE GEOTEXTILE PROTECTS THE SOIL FROM EROSION, AND THE HP-TRM PROVIDES LONG TERM STABILITY. THIS INSTALLATION CAN BE SOIL-FILLED AND SEEDED, OR LEFT TO FILL-IN WITH SEDIMENTS AND NATIVE VEGETATION. MECHANICALLY-BONDED FIBER MATRIX (MBFM) HYDROMULCH HAS ALSO SHOWN TO BE AN EFFECTIVE FILLER/SEED BASE. FOR INSTALLATIONS ON OUTFALLS > 60 INCHES WITH HIGH VELOCITY FLOWS, AN ADDITIONAL LAYER OF TM'S ADJACENT TO THE OUTFALL PROVIDES GREATER PROTECTION.
19. TYPE "E" INSTALLATION INSTRUCTIONS
    19.1. DESIGN APPLICATIONS: STREAMBANK AND SHORELINE; MAXIMUM 1.5H:1V SLOPE.
    19.2. AN EIGHT (8) TO 12 OUNCE GEOTEXTILE IS THE SOIL COVER PRACTICE UNDER THE TRANSITION MATS WHICH ARE GENERALLY INSTALLED THREE (3) FEET BELOW AND MINIMUM EIGHT (8) INCHES ABOVE THE NORMAL WATER LEVEL. TYPES A, B, AND D MAY BE UTILIZED ABOVE THE GEOTEXTILE/TM PROTECTED AREA. REQUIRES DIFFERENT ANCHOR CONFIGURATION AND DEPTH.
20. FOR DESIGN INFORMATION, REFER TO "DESIGN METHODOLOGY" DOCUMENT AVAILABLE AT WWW.SCOURSTOP.COM.

SEE 'GRADING' SHEETS 5 TO 10, INCLUSIVE, AND 'STORM' SHEETS 26 TO 71, INCLUSIVE, FOR SIZES AND LOCATIONS

GLYNN VILLAGE PLAT 10 - DETAILS 14

SCALE: AS NOTED	DESIGNED BY: JRK
DWG: 15-013-DTL-3.dwg	CHECKED BY: DJS
FIELD BOOK:	SHEET 100 OF 100
DRAWN BY: PJV	DATE: 02/24/2016
FILE NO.: 15-013	

NO.	REVISION	DATE	BY	FOR:

LOCATION:

ERG
Engineering Resources Group, Inc.
Engineers and Surveyors
2413 GRAND AVENUE
DES MOINES, IOWA 50312
(515) 288-4823

15-013

J:\2015 Proj\15-013\DESIGN\15-013-DTL-3.dwg, 5/5/2016 10:30:23 AM, Jay

STORMWATER POLLUTION PREVENTION PLAN

NOTE:

THE LOCATION OF ALL UTILITIES INDICATED ON THE PLANS ARE TAKEN FROM EXISTING PUBLIC RECORDS. THE EXACT LOCATION AND ELEVATION OF ALL PUBLIC UTILITIES MUST BE DETERMINED BY THE CONTRACTOR. IT SHALL BE THE DUTY OF THE CONTRACTOR TO ASCERTAIN WHETHER ANY ADDITIONAL FACILITIES OTHER THAN THOSE SHOWN ON THE PLANS MAY BE PRESENT.

NOTES:

1. SEE SWPPP SHEETS "B" AND "C" FOR ADDITIONAL INFORMATION.
2. SEE ALL RELATED NOTES FOR SUBDIVISION INFRASTRUCTURE IMPROVEMENT PLANS FOR THIS PHASE/DEVELOPMENT FOR ADDITIONAL INFORMATION.
3. THIS PROJECT IS COVERED BY THE IOWA DEPARTMENT OF NATURAL RESOURCES NPDES GENERAL PERMIT NO. 2; WITH ALL TERMS AND CONDITIONS.
4. ALL CONTRACTOR(S) SHALL UTILIZE APPROVED CIVIL SITE PLANS, PROJECT SWPPP, AND NPDES NOI PERMIT CONDITIONS FOR ADDITIONAL DETAILS, NOTES, AND/OR DIRECTIONS.
5. ALL CONTRACTORS SHALL INSTALL EROSION AND SEDIMENTATION CONTROL INFRASTRUCTURE PRIOR TO INITIATING WORK ON THE SITE.
6. CITY OF WAUKEE STANDARD SPECIFICATIONS SHALL APPLY TO GRADING, EROSION CONTROL, AND ASSOCIATED WORK FOR THE PROJECT. THE CONTRACTOR SHALL ESPECIALLY OBSERVE THE REQUIREMENTS OF THE SPECIFICATIONS (ALONG WITH THE EROSION CONTROL PLAN PREPARED FOR THE PROJECT) IN CONDUCTING GRADING AND SURFACE RESTORATION WORK.
   - 6.1. THE STORMWATER POLLUTION PREVENTION PLAN IS THE RESPONSIBILITY OF THE OWNER WHOM SHALL MAKE ALL CONSTRUCTION WORKERS AWARE OF THE MAJOR PROVISIONS OF SAID PLAN.
   - 6.2. ALL EROSION AND SEDIMENT CONTROL MEASURES SHALL BE CHECKED REGULARLY, ESPECIALLY AFTER EACH SIGNIFICANT STORM, TO LOCATE DAMAGE AND CONDUCT MAINTENANCE OPERATIONS.
   - 6.3. EXCEPT AS PRECLUDED BY SNOW COVER, STABILIZATION MEASURES SHALL BE INITIATED ON ALL DISTURBED AREAS NO LATER THAN THE 14TH DAY AFTER NO CONSTRUCTION ACTIVITY HAS OCCURRED ON AREAS WHERE CONSTRUCTION ACTIVITY WILL NOT OCCUR FOR A PERIOD OF ANOTHER 21 CALENDAR DAYS.INSTALL SILT FENCE/WATTLE PRIOR TO BEGINNING CONSTRUCTION AROUND NOTED STRUCTURES AND ON STEEP SLOPES. ADDITIONAL LINES OF SILT FENCE/WATTLE WILL BE REQUIRED AS PROGRESS, OR AS DIRECTED.
7. REMOVE SILT ACCUMULATED ALONG SILT FENCE/WATTLE WHEN REACHES MAXIMUM OF 50 PERCENT OF EXPOSED HEIGHT, OR AS DIRECTED.
8. CONTRACTOR(S) TO CONSTRUCT AND STABILIZE PROPOSED NOTED SEDIMENTATION BASIN, BASIN OUTLET STRUCTURE, AND OUTLET PRIOR TO CONSTRUCTING THE REST OF THE SUBDIVISION INFRASTRUCTURE IMPROVEMENTS. PROPOSED SEDIMENTATION BASIN(S) SHALL BE LOCATED WITHIN THE EXISTING/PROPOSED STORMWATER MANAGEMENT FACILITIES (SMF). SEE ADDITIONAL NOTES AND DETAILS FOR ADDITIONAL INFORMATION.
9. INSTALL TEMPORARY SEDIMENT BASIN OUTLET STRUCTURE SURROUNDED BY SILT FENCE PRIOR TO THE CONSTRUCTION OF SUBDIVISION INFRASTRUCTURE (DEMOLITION, PIPING, MASS GRADING, AND PAVEMENT).
10. AT COMPLETION OF THE SUBDIVISION INFRASTRUCTURE, CLEAN BASIN(S), INSTALL PERMANENT STABILIZATION, AND INSTALL NOTED GRANULAR BACKFILL TRENCH IN BOTTOM OF SMF BASIN. SURROUND GRANULAR TRENCH AND OUTLET STRUCTURE WITH SILT FENCE DURING RESIDENTIAL HOME CONSTRUCTION. SMF CONTROL MEASURES IN BASIN SHALL REMAIN IN PLACE UNTIL FULL BUILDOUT OF RESIDENTIAL LOT BUILDINGS IN SUBDIVISION.
11. AT COMPLETION OF THE SUBDIVISION INFRASTRUCTURE AND AT FINAL STABILIZATION, THE SWPPP MANAGER SHALL PROVIDE AS-BUILT PLANS AND A CERTIFICATION STATEMENT INDICATING THAT ALL BMP's AND SMF's WERE CONSTRUCTED TO AT LEAST THE DESIGNED.
12. PLACE SILT FENCE, FILTER SOCK, OR OTHER APPROVED SEDIMENTATION CONTROL/SILT CONTAINMENT DEVICE AROUND EXISTING STORM INTAKES AND/OR STRUCTURES, AND/OR PROPOSED STORM INTAKES AND/OR STRUCTURES AFTER CONSTRUCTED AND BEFORE PAVING, AS NOTED BELOW.
13. PROVIDE/VERIFY BELOW GRADE INLET PROTECTION FOR ALL STORM STRUCTURES WITHIN PUBLIC STREETS OR RIGHT-OF-WAY (ROW) ONCE PAVING IS COMPLETED.
14. PLACE SILT FENCE, FILTER SOCK, AND/OR OTHER APPROVED SEDIMENTATION CONTROL/SILT CONTAINMENT DEVICE AROUND STORM INTAKE AND/OR STRUCTURE AFTER CONSTRUCTED.
15. SEE RESPECTIVE 'STORM SECTION' SHEETS FOR INFORMATION ON SCOURSTOP OR RIPRAP AT STORM SEWER OUTLETS.
16. ALL RIPRAP SHALL BE PLACED OVER ENGINEERING FABRIC. AS HATCHED IN CONSTRUCTION PLANS, ALL AREAS OF THE EXISTING/PROPOSED DITCH BOTTOM AROUND END SECTIONS, AND EXISTING/PROPOSED END SECTIONS DISCHARGING INTO THE DITCH SHALL BE COVERED WITH RIPRAP.
17. REMOVE AN ADEQUATE AMOUNT OF TOPSOIL FROM THE UPPER 12 INCHES OF THE EXISTING ONSITE ORGANIC MATERIAL TO ALLOW FOR A FINISHED GRADE OF A MINIMUM TOPSOIL DEPTH OF SIX (6") INCHES.
18. STRIP AND STOCKPILE ALL TOPSOIL FOR REUSE ON SITE. ALL AREAS NOT COVERED BY POND, PAVEMENT, AND/OR BUILDINGS SHALL BE GRASS. SEEDED/SODDED AREAS SHALL BE PREPARED AS SPECIFIED IN SUDAS, AND NO LESS THAN SIX (6") INCHES OF TOPSOIL SHALL BE IN PLACE BEFORE PERMANENT (FINAL STABILIZATION) SEEDING/SODDING OPERATIONS COMMENCE. AS DOCUMENTED BY THE SOILS REPORT, IF LESS THAN SIX (6") INCHES OF TOPSOIL IS LOCATED ON SITE, THE CONTRACTOR SHALL RETAIN AND RESPREAD ALL AVAILABLE MATERIAL AT SIX (6") INCHES OF TOPSOIL WITHIN PUBLIC ROW; AND THEN AT AN EQUAL DEPTH AS EACH LOT IS DEVELOPED.
19. WRITTEN VERIFICATION SHALL BE SUPPLIED AT LEAST TO THE CITY, THE DEVELOPER, AND THE ENGINEER BY THE GRADING CONTRACTOR(S) DOCUMENTING THE LOCATIONS AND MINIMUM DEPTHS OF TOPSOIL RESPREAD PER THE NPDES GENERAL PERMIT.
20. AT COMPLETION OF SITE GRADING AND ROADWAY PAVING, CLEAN UP SITE AND INSTALL (PERMANENT OR TEMPORARY) STABILIZATION UNTIL PHASE RESIDENTIAL DEVELOPMENT BEGINS.
21. ALL AREAS NOT COVERED BY PAVEMENT OR BUILDINGS SHALL BE GRASS. SEEDED/SODDED AREAS SHALL BE PREPARED AS SPECIFIED IN SUDAS.
   - 21.1. ONLY AREAS DESIGNATED ON PLANS AS PRAIRIE GRASS SHALL BE SUDAS NATIVE GRASS AND FORBS/WILDFLOWER MIX (AKA PRAIRIE MIX); AND SHALL BE INSTALLED BY THE DEVELOPER'S CONTRACTOR.
   - 21.2. ONLY AREAS DESIGNATED ON PLANS AS URBAN LAWN MIX SHALL BE SUDAS URBAN LAWN MIX AND/OR SOD; AND SHALL BE INSTALLED BY THE DEVELOPER'S CONTRACTOR WITH THE SPECIFIED TYPE.
   - 21.3. ALL OTHER AREAS SHALL BE DESIGNATED AS AREAS TO RECEIVE LAWN SEED MIX AND/OR SODDED. THESE AREAS SHALL FIRST BE SEEDED AND MULCHED BY THE DEVELOPER'S CONTRACTOR WITH SUDAS TYPE 4 EROSION CONTROL MIX. THE PERMANENT COVER SHALL BE BY THE HOME BUILDER'S CONTRACTOR WITH A URBAN LAWN MIX AND/OR SODDED.
22. ALL SEEDED SURFACES SHALL BE COVERED WITH AT LEAST SIX (6") INCHES TOPSOIL IN PLACE BEFORE PERMANENT (FINAL) SEEDING/SODDING OPERATIONS COMMENCE AND AT FINAL STABILIZATION.
23. PROVIDE POSITIVE DRAINAGE AROUND ALL STOCKPILES AND OTHER IMPROVEMENTS DURING AND AT THE COMPLETION OF OF ALL PHASES OF CONSTRUCTION INCLUDING BUT NOT LIMITED TO INFRASTRUCTURE AND HOUSING. DRAIN ANY ONSITE AREAS WITH PONDING WATER TO THE SEDIMENTATION BASIN.
24. EROSION/SEDIMENTATION CONTROL MEASURES SHALL BE INSTALLED AS SHOWN ON THIS EXHIBIT AND ARE FOR INITIAL (START-UP) PURPOSES ONLY. THE CONTRACTOR(S) SHALL MODIFY EROSION/SEDIMENTATION CONTROL MEASURES DURING THE COURSE OF CONSTRUCTION TO ACCOMMODATE FIELD CONDITIONS AND METHODS OF CONSTRUCTION. MODIFY EXHIBIT AS REQUIRED DURING THE COURSE OF CONSTRUCTION TO REFLECT FIELD MODIFICATIONS, INCLUDING 'REVISION' BOX.
25. THE CONTRACTOR SHALL UTILIZE PROJECT SWPPP AND NPDES NOI PERMIT CONDITIONS FOR ADDITIONAL DETAILS AND DIRECTIONS. EROSION/SEDIMENTATION CONTROL MEASURES MAY BE REMOVED AS ALLOWED BY PERMIT CONDITIONS AND AT THE TERMINATION OF THE NPDES STORMWATER PERMIT AT THE COMPLETION OF THE PROJECT.
26. TREE/BUSH PROTECTION SHALL CONSIST OF MINIMUM 48 INCHES HIGH ORANGE CONSTRUCTION INSTALLED AND SECURED ON METAL T-POSTS AND BEING NO CLOSER THAN THE DRIP LINE, OR AS DIRECTED.
27. "TEMPORARY" BMPs SHALL BE REMOVED AT THE END OF SITE DEVELOPMENT AND AT FINAL STABILIZATION. ADDITIONAL BMPs SHALL BE INSTALLED BY THE INDIVIDUAL LOT CONTRACTOR(S).

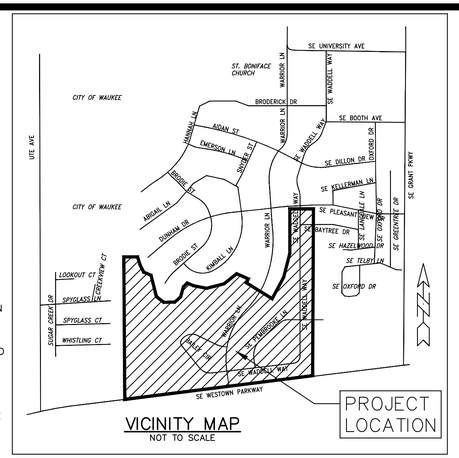

VICINITY MAP
NOT TO SCALE

INITIAL EROSION CONTROL QUANTITIES

SILT FENCE/WATTLE = 19,818 LIN. FT.
INLET PROTECTION = 122 EACH
PIPE PROTECTION = 2 EACH
DITCH CHECKS (SILT FENCE) = 140 EACH
DITCH CHECKS (AGGREGATE) = 8 EACH
ROCK STABILIZED ENTRANCE(S) = 93 SQ. YDS.
SUDAS TYPE 4 EROSION CONTROL MIX (AND ESTIMATED AREA OF DISTURBANCE) = 68.07 ACRES
SUDAS NATIVE GRASS AND FORBS/WILDFLOWER (PRAIRIE) MIX = 22.52 ACRES
SUDAS URBAN LAWN MIX, TYPE 1 = 6.22 ACRES
SUDAS URBAN LAWN MIX, TYPE 4 = 32.57 ACRES
SUDAS URBAN LAWN MIX, TYPE 6 = 2.77 ACRES
SUDAS WETLAND MIX = 5.01 ACRES
TREE/BUSH PROTECTION (FENCING) = 3,300 LIN. FT.

NO.	REVISION	DATE

NOTICE:

ALL CONTRACTORS AND SUB-CONTRACTORS MUST SIGN THE NPDES CERTIFICATION STATEMENT PRIOR TO PERFORMING ANY WORK ON SITE. BY SIGNING THE CERTIFICATION STATEMENT, THE CONTRACTOR AND/OR SUBCONTRACTOR AGREES TO BECOME A CO-PERMITTEE WITH THE OWNER AND OTHER CO-PERMITTEES. AS A CO-PERMITTEE, YOU AND YOUR COMPANY ARE LEGALLY REQUIRED UNDER THE CLEAN WATER ACT AND THE CODE OF IOWA TO ENSURE COMPLIANCE WITH THE TERMS AND CONDITIONS OF THE STORM WATER POLLUTION PREVENTION PLAN DEVELOPED UNDER THE NPDES PERMIT. SIGNIFICANT PENALTIES MAY BE IMPOSED BY THE EPA AND/OR THE IDNR SHOULD A PERMITTEE OR CO-PERMITTEE VIOLATE NPDES PERMIT REQUIREMENTS.

PLACE SILT FENCE OR FILTER SOCK AROUND STORM INTAKE AND/OR STRUCTURE AFTER CONSTRUCTED. PLACE BELOW GRADE INLET PROTECTION FOR ALL STORM STRUCTURES WITHIN PUBLIC STREETS OR RIGHT-OF-WAY ONCE PAVING IS COMPLETED.

SEE CONSTRUCTION/SITE PLAN 'GRADING' SHEETS 5 – 10, INCLUSIVE; 'STORM' SHEETS 26 TO 71, INCLUSIVE; AND 'DETAIL' SHEETS 87 TO 100, INCLUSIVE, FOR ADDITIONAL INFORMATION ON PERMANENT AND/OR TEMPORARY STABILIZATION AND SEDIMENT CONTROL.

LEGEND

SP = SADDLE POINT	
R = RIM EL FOR INTAKE	
X = SPOT GRADE MARK (PAVED SURFACE)	
T/C = TOP OF CURB ELEVATION	
T/W = TOP OF SIDEWALK	
153	DENOTES EXISTING CONTOUR
155	DENOTES PROPOSED CONTOUR
X 56.85	DENOTES PROPOSED SPOT ELEVATION
T/W	DENOTES TOP OF WALL ELEVATION
B/W	DENOTES BOTTOM OF WALL ELEVATION
X=77.08G	DENOTES EXISTING GUTTER ELEVATION
X=74.02TC	DENOTES EXISTING TOP OF CURB ELEVATION
EX	DENOTES EXISTING FLOW/DRAINAGE DIRECTION
PR	DENOTES PROPOSED FLOW/DRAINAGE DIRECTION
	DENOTES PROPOSED INLET/PIPE PROTECTION
	DENOTES PROPOSED SCOURSTOP OR RIPRAP (SEE STORM SEWER/SECTION PLANS)
	DENOTES PROPOSED DITCH CHECK/CHECK DAM (SILT FENCE)
	DENOTES PROPOSED DITCH CHECK/CHECK DAM (AGGREGATE)

MINIMUM DISTANCE FROM SITE TO RECEIVING WATERS OF UNNAMED STREAM/CREEK: 30 FEET

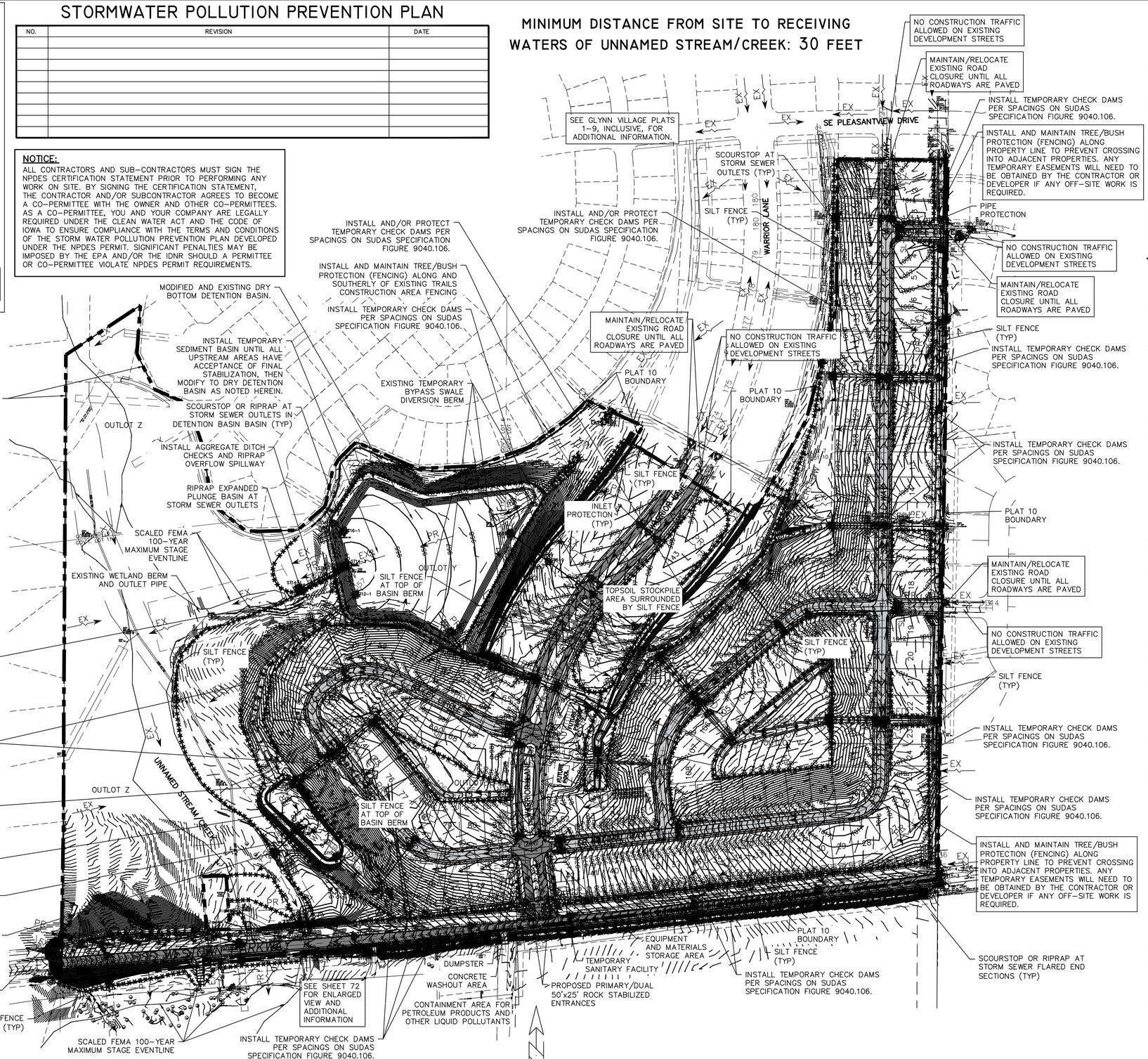

February 24, 2016

SWPPP MANAGER (PRINT NAME)	COMPANY	DATES
SWPPP INSPECTOR (PRINT NAME)	COMPANY	DATES

A

GLYNN VILLAGE PLAT 10 – INITIAL STARTUP STORMWATER POLLUTION PREVENTION PLAN/EROSION CONTROL SHEET

J:\2015\Proj\15-013\Admin\Permit\15-013-SWPPP.dwg, 5/5/2016 10:30:47 AM, jay

NOTE:

THE LOCATION OF ALL UTILITIES INDICATED ON THE PLANS ARE TAKEN FROM EXISTING PUBLIC RECORDS. THE EXACT LOCATION AND ELEVATION OF ALL PUBLIC UTILITIES MUST BE DETERMINED BY THE CONTRACTOR. IT SHALL BE THE DUTY OF THE CONTRACTOR TO ASCERTAIN WHETHER ANY ADDITIONAL FACILITIES OTHER THAN THOSE SHOWN ON THE PLANS MAY BE PRESENT.

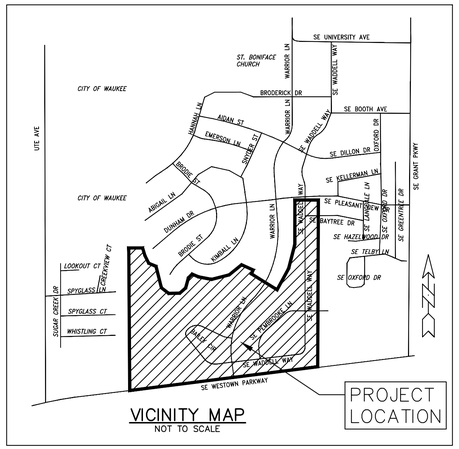

VICINITY MAP
NOT TO SCALE

NOTE:

1. SEE SWPPP SHEETS "A" & "C" FOR ADDITIONAL INFORMATION.

STORMWATER POLLUTION PREVENTION PLAN

NO.	REVISION	DATE

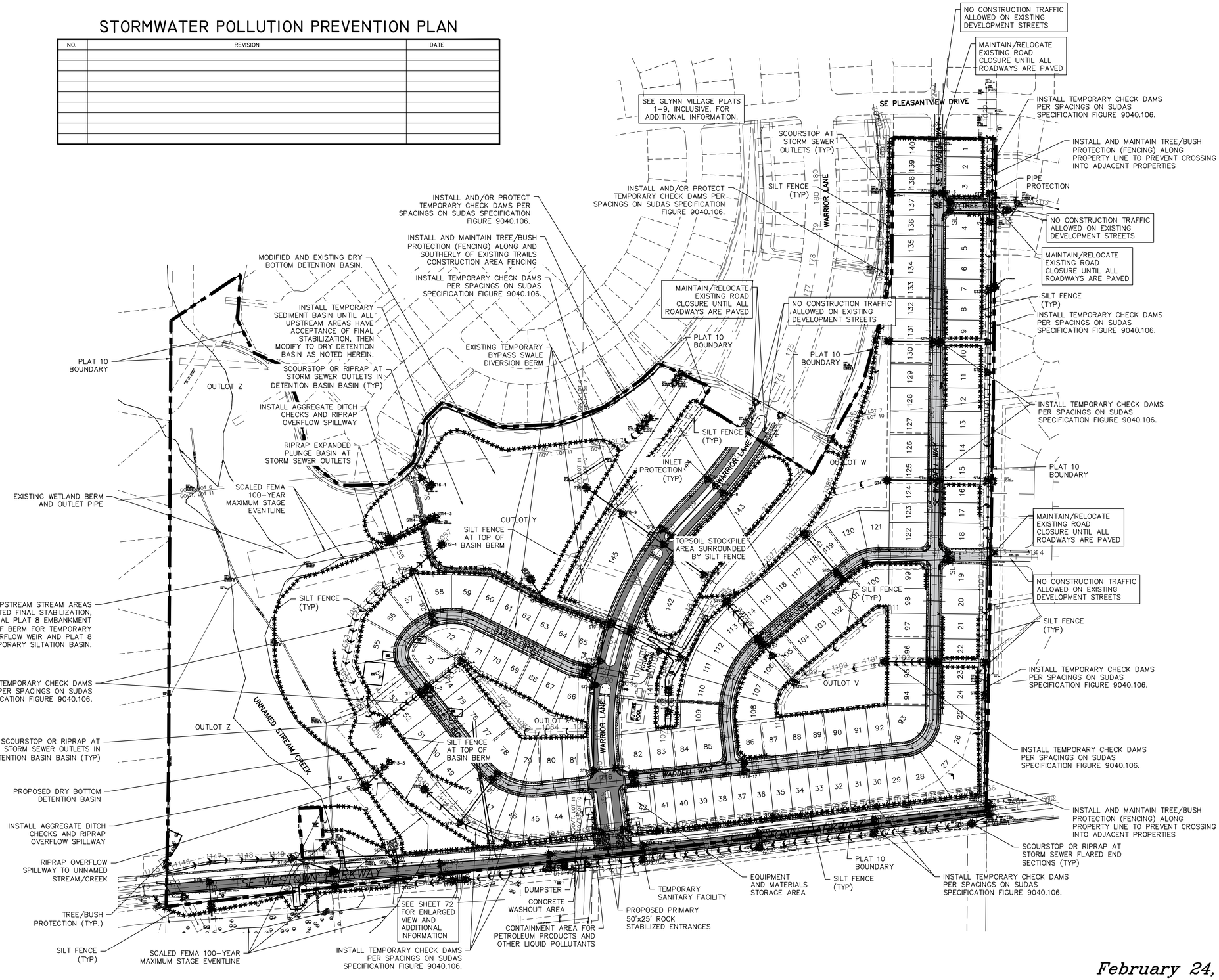

February 24, 2016

SWPPP MANAGER (PRINT NAME)	COMPANY	DATES
SWPPP INSPECTOR (PRINT NAME)	COMPANY	DATES

B

GLYNN VILLAGE PLAT 10 – SWPPP SITE PLAN

NOTE:

THE LOCATION OF ALL UTILITIES INDICATED ON THE PLANS ARE TAKEN FROM EXISTING PUBLIC RECORDS. THE EXACT LOCATION AND ELEVATION OF ALL PUBLIC UTILITIES MUST BE DETERMINED BY THE CONTRACTOR. IT SHALL BE THE DUTY OF THE CONTRACTOR TO ASCERTAIN WHETHER ANY ADDITIONAL FACILITIES OTHER THAN THOSE SHOWN ON THE PLANS MAY BE PRESENT.

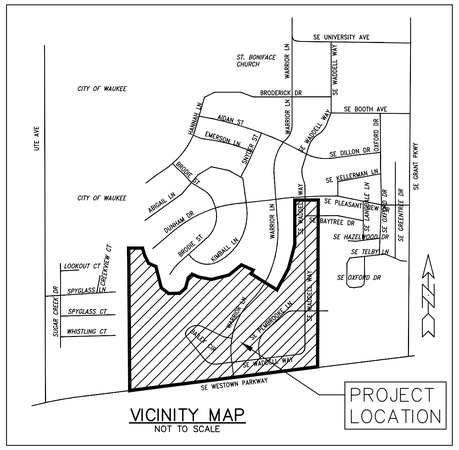

VICINITY MAP
NOT TO SCALE

NOTES:

1. SEE ADDITIONAL PLANTING AND SWPPP NOTES ON INITIAL STARTUP STORMWATER POLLUTION PREVENTION PLAN/EROSION CONTROL SHEET – SHEET "A" & "B".
2. ALL SEEDING SHALL BE DONE IN ACCORDANCE WITH SUDAS SPECIFICATION 9010 WITH ANY REFERENCED FIGURES AND SPECIFICATIONS.
3. ALL SODDING SHALL BE DONE IN ACCORDANCE WITH SUDAS SPECIFICATION 9020 WITH ANY REFERENCED FIGURES AND SPECIFICATIONS.
4. ALL PLANTINGS MATERIALS AND PLANTING SHALL BE DONE IN ACCORDANCE WITH SUDAS SPECIFICATION 9030 WITH ANY REFERENCED FIGURES AND SPECIFICATIONS.
5. SEE WARRIOR LANE MEDIAN GROUND COVER PLAN SHEET 74 FOR ENLARGED WARRIOR LANE INFORMATION.
6. SEE SHEETS 75 TO 76, INCLUSIVE, FOR ADDITIONAL PLANTING INFORMATION IN LANDSCAPING BUFFER EASEMENTS.
7. SEE 'GREENBELT' SHEETS 55 TO 69, INCLUSIVE FOR ADDITIONAL SWALE/DITCH PROTECTION INFORMATION.
8. WETLAND SEEDING AREA SHALL BE PREPARED WITH 12 INCHES MINIMUM DEPTH OF TOPSOIL FOR ALL AREAS LOCATED BELOW WETLAND OUTLET STRUCTURE SIDE OPENING ELEVATION.
9. ALL SEEDING MIXTURES AND/OR SODDING SHALL ALSO INCLUDE, BUT NOT LIMITED TO: LOOSENING AND SMOOTHING TOPSOIL TO FINISHED GRADE, MULCH, FERTILIZER, WATERING, RE-SEEDING, CLEANUP AS NECESSARY UNTIL ACCEPTANCE OF FINAL STABILIZATION.
10. ALL AREAS SHOWN INCLUDE SIDEWALK AND/OR TRAIL AREAS BY THE DEVELOPER'S CONTRACTOR(S) OR THE INDIVIDUAL HOME BUILDER'S CONTRACTOR(S).
11. FOR ALL DISTURBED AREAS OUTSIDE OF THE PLAT 10 BOUNDARY, REPLACE EXISTING (RESIDENTIAL) GRASSED AREAS WITH SOD AND WATER UNTIL ESTABLISHED – MAINLY ALONG THE NORTHERLY AND EASTERLY BOUNDARIES.

STORMWATER POLLUTION PREVENTION PLAN

NO.	REVISION	DATE

LEGEND:

- NATIVE GRASS AND FORBS/WILDFLOWER (PRAIRIE) MIX
- URBAN SEED MIX, TYPE 1
- URBAN SEED MIX, TYPE 4
- URBAN SEED MIX, TYPE 6
- WETLAND MIX

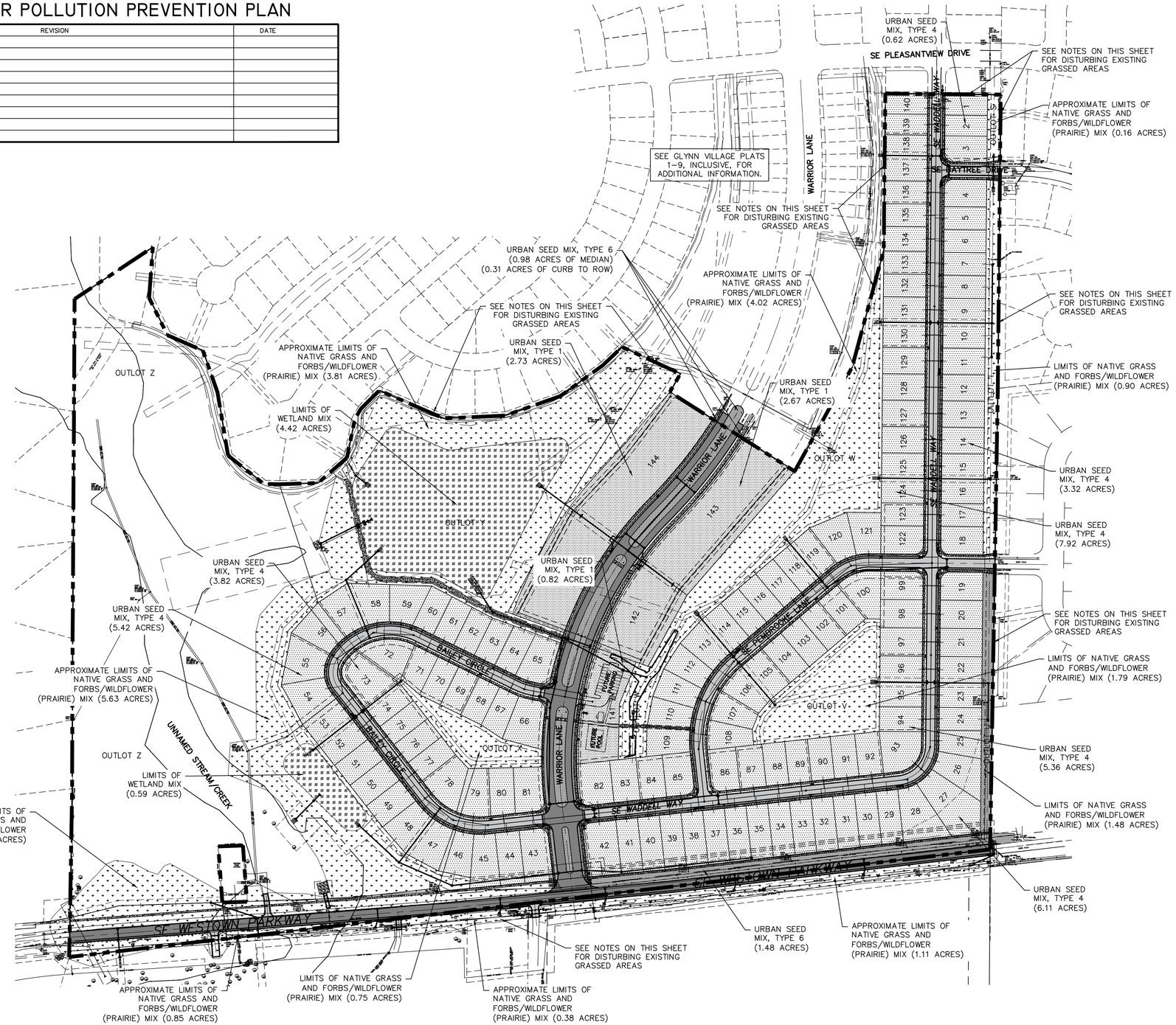

GLYNN VILLAGE PLAT 10 – SWPPP & STABILIZATION SITE PLAN

February 24, 2016

SWPPP MANAGER (PRINT NAME)	COMPANY	DATES
SWPPP INSPECTOR (PRINT NAME)	COMPANY	DATES

C