CAMP CATLIN
PHASE 2 TOT LOT
PESTICIDE IMPACTED
SOIL SITE

AREA CAPPED WITH
2 FEET OF CLEAN MATERIAL
BASED ON SOILS TESTING

AREA: 5054 SQ FT.
0.12 ACRES
PERIMETER: 284 FT.

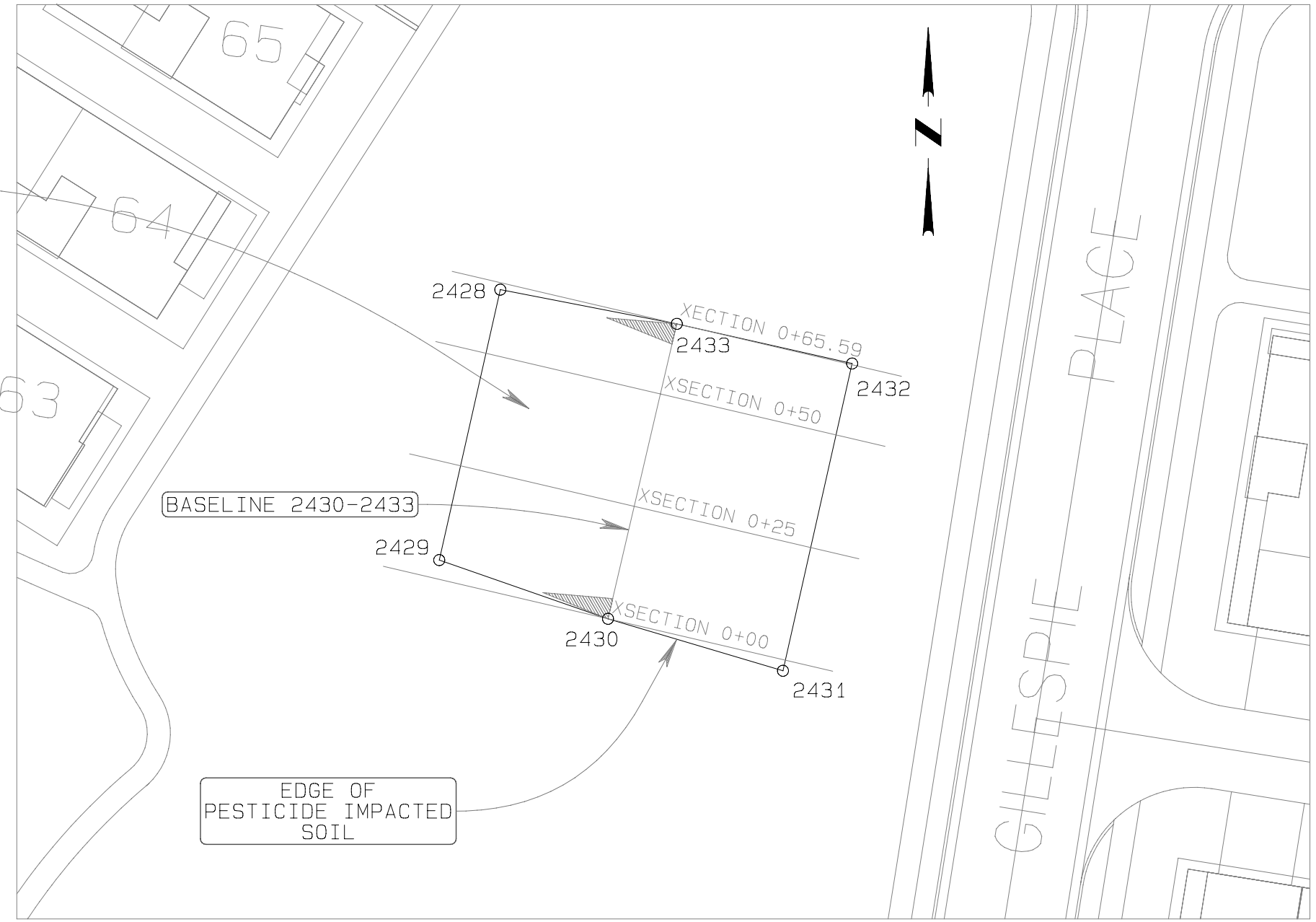

PESTICIDE IMPACTED SOIL
SITE BOUNDARY
COORDINATE TABLE

Pt #	Northing	Easting
2428	-8530.04	-2294.35
2429	-8588.61	-2307.58
2430	-8601.32	-2271.01
2431	-8612.58	-2233.11
2432	-8546.04	-2218.12
2433	-8537.45	-2256.11

NOTE: COORDINATES ARE
REFFERED TO GOVERNMENT
SURVEY TRIANGULATION
STATION "SALT LAKE"
AND ELEVATIONS
ARE BASED ON MEAN
SEA LEVEL

GRAPHIC SCALE 1"=30'

0 30 60 90

Date: 9/25/2008
Drawn By: (b)(6)
Checked By: (b)(6)
Approved By: (b)(6)

PARSONS
3049 UALENA STREET
HONOLULU, HI 96819

CAMP CATLIN
PHASE 2 TOT LOT
PESTICIDE IMPACTED SOIL SITE

EXHIBIT
A

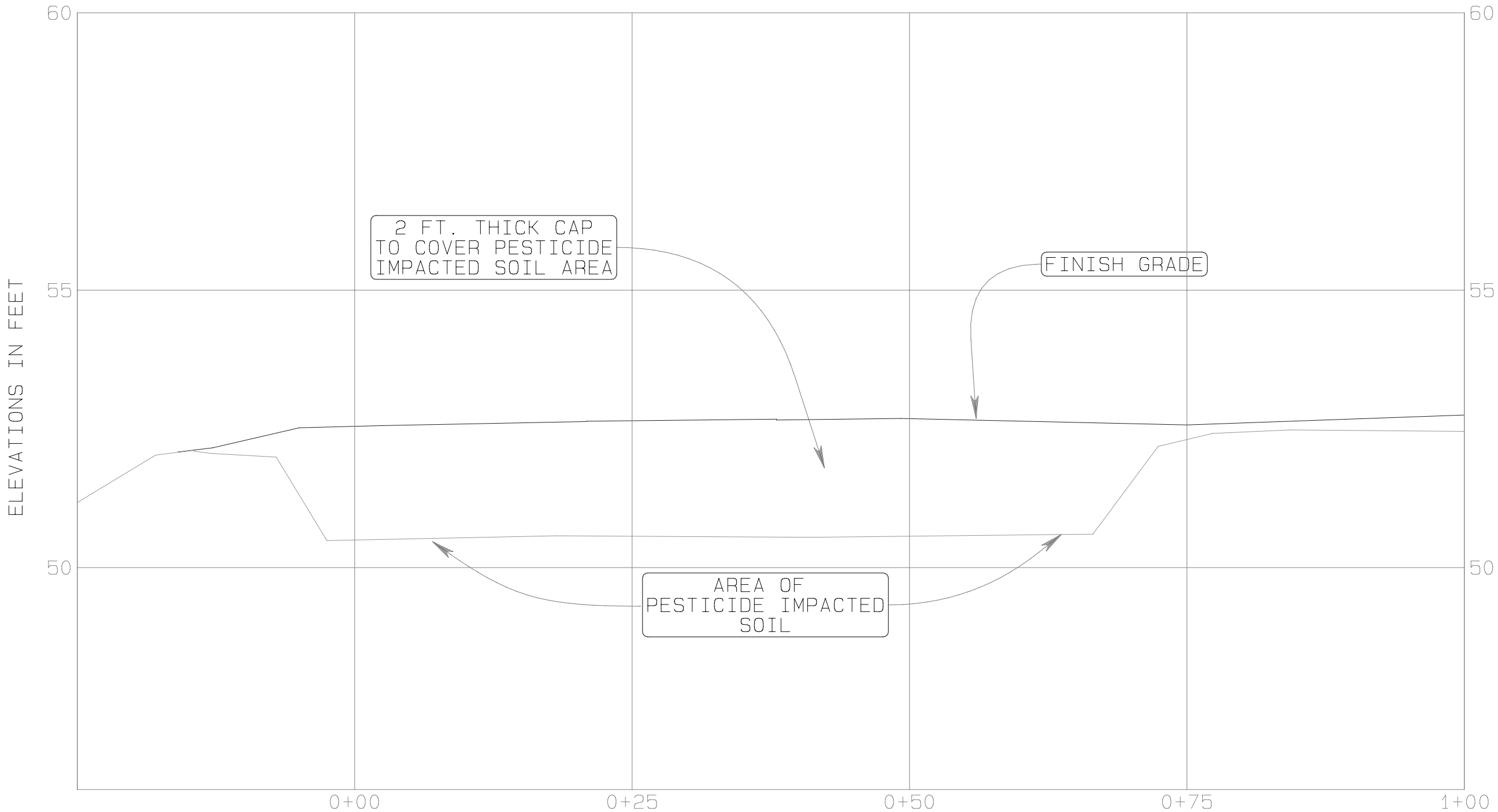

BASELINE PROFILE 2430 - 2433

HORIZ 1"=10 FT.
VERT 1"=2 FT.

Date: 9/25/2008
Drawn By: (b)(6)
Checked By: (b)(6)
Approved By: (b)(6)

PARSONS
3049 UALENA STREET
HONOLULU, HI 96819

CAMP CATLIN
PHASE 2 TOT LOT
PESTICIDE IMPACTED SOIL SITE

EXHIBIT
B

ELEVATIONS IN FEET

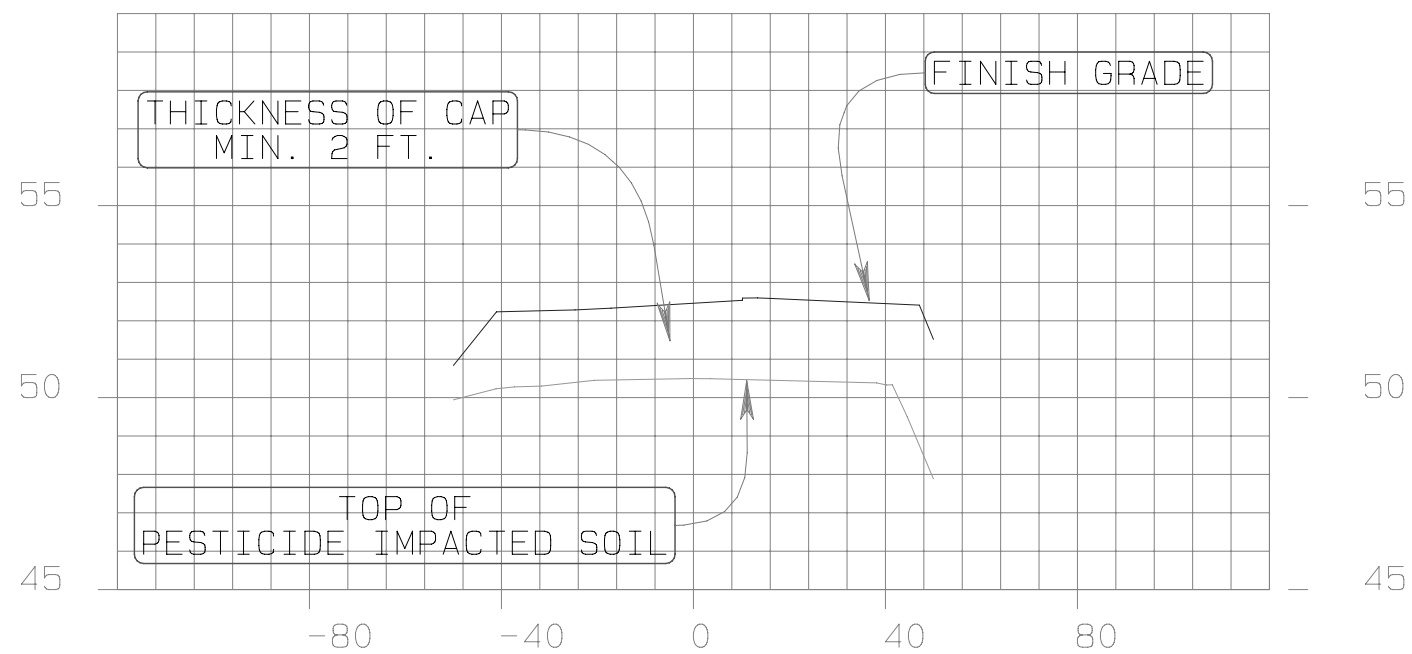

CROSS SECTION 0+00

HORIZ 1"=40 FT.
VERT 1"=5 FT.

Date: 9/25/2008
Drawn By: [redacted]
Checked By: [redacted]
Approved By: [redacted]

PARSONS
3049 UALENA STREET
HONOLULU, HI 96819

CAMP CATLIN
PHASE 2 TOT LOT
PESTICIDE IMPACTED SOIL SITE

EXHIBIT
C

ELEVATIONS IN FEET

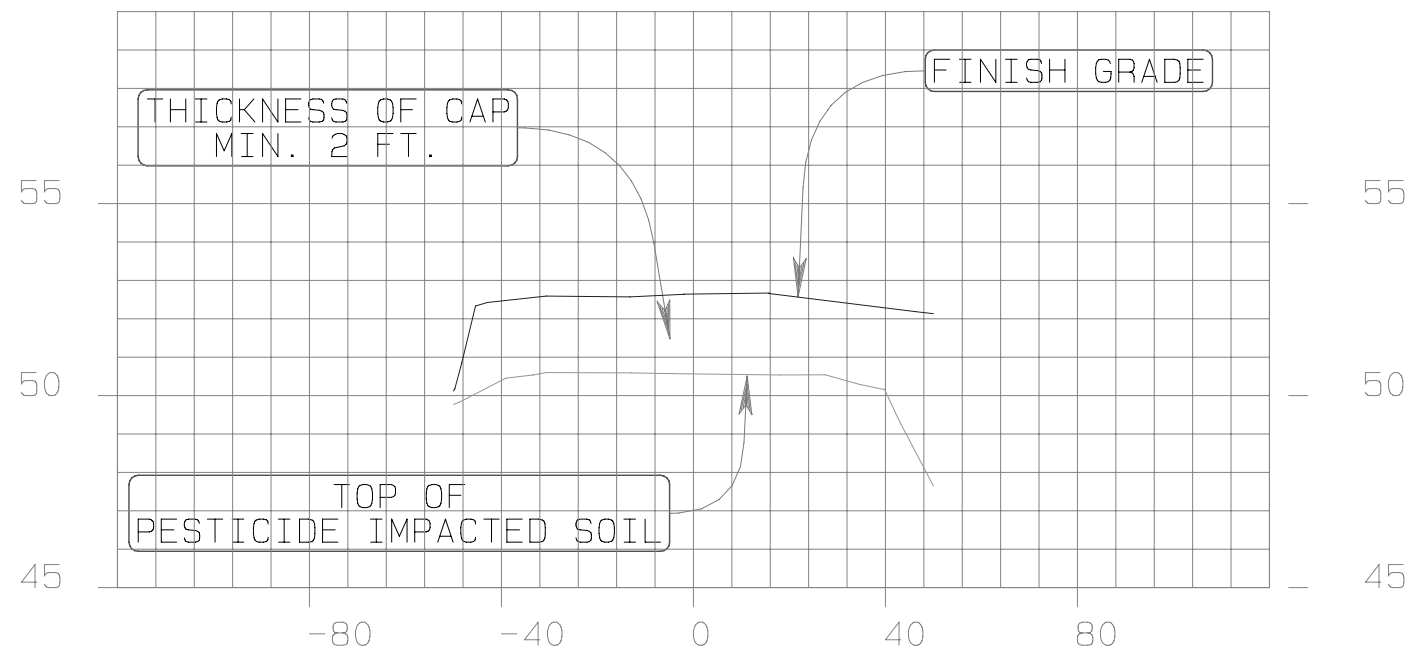

CROSS SECTION 0+25

HORIZ 1"=40 FT.
VERT 1"=5 FT.

Date: 9/25/2008
Drawn By: (b)(6)
Checked By: (b)(6)
Approved By: (b)(6)

PARSONS
3049 UALENA STREET
HONOLULU, HI 96819

CAMP CATLIN
PHASE 2 TOT LOT
PESTICIDE IMPACTED SOIL SITE

EXHIBIT
D

ELEVATIONS IN FEET

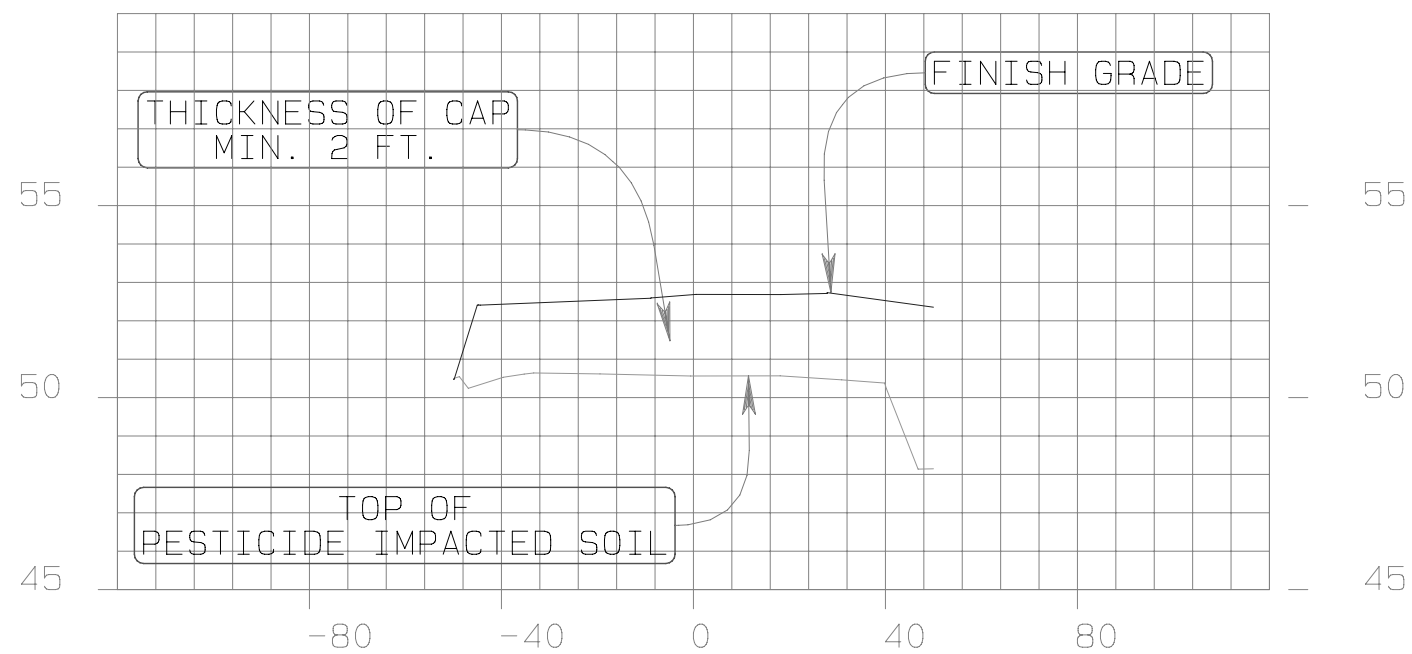

CROSS SECTION 0+50

HORIZ 1"=40 FT.
VERT 1"=5 FT.

Date: 9/25/2008
Drawn By: (b)(6)
Checked By: (b)(5)
Approved By: (b)(6)

PARSONS
3049 UALENA STREET
HONOLULU, HI 96819

CAMP CATLIN
PHASE 2 TOT LOT
PESTICIDE IMPACTED SOIL SITE

EXHIBIT

ELEVATIONS IN FEET

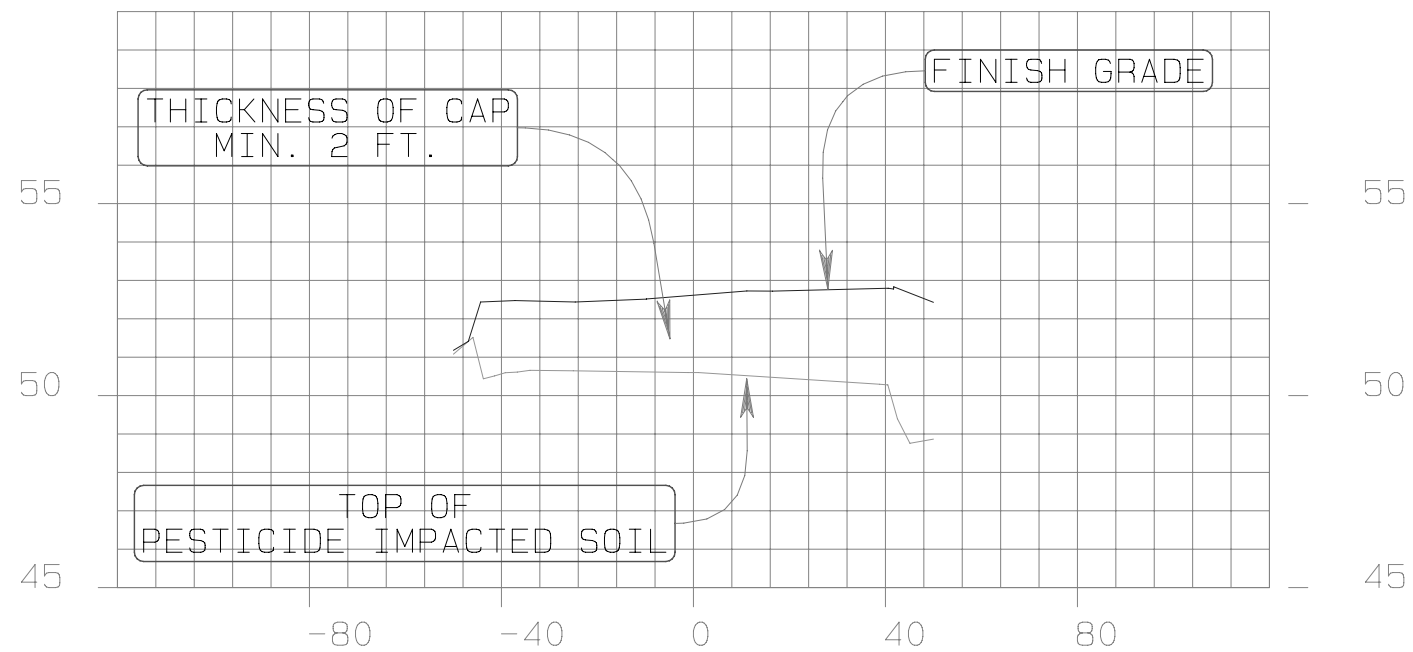

CROSS SECTION 0+65.59

HORIZ 1"=40 FT.
VERT 1"=5 FT.

Date: 9/25/2008
Drawn By: (b) (6)
Checked By: (b) (6)
Approved By: (b) (6)

PARSONS
3049 UALENA STREET
HONOLULU, HI 96819

CAMP CATLIN
PHASE 2 TOT LOT
PESTICIDE IMPACTED SOIL SITE

EXHIBIT
F