1382 West Ninth Street, Suite 200
Cleveland, Ohio 44113

216.344.3072 PHONE
216.344.3073 FAX

www.TRCsolutions.com

October 13, 2015

RCRA Branch (LR-8J)
U.S. EPA, Region 5
77 West Jackson Boulevard
Chicago, Illinois 60604

Attention: Mr. Brian Kennedy

Reference: Quarterly Progress Report
Consent Agreement and Final Order (CAFO)
Docket No. RCRA-05-2014-0013
Project No. 216406.0000

Dear Mr. Kennedy:

TRC Environmental Corporation (TRC), is pleased to submit, on behalf of Canton Drop Forge (CDF), the attached Progress Report for the **Third Quarter 2015**, as agreed to in the Consent Agreement and Final Order (CAFO) journalized by the United States Environmental Protection Agency (U.S. EPA) on September 18, 2014.

Should you have any questions regarding the enclosed document, please contact me at (216) 344-3072 or via e-mail kteuscher@trcsolutions.com.

Sincerely,

TRC Environmental Corporation

Kathleen R. Teuscher
Risk Assessor/Project Manager

cc: Erik Hagen – DERR CO, Ohio EPA
Don Vogel – DERR CO, Ohio EPA
Ron Shadrach – DHWM, NEDO
Eaton Weiler – U.S. EPA, Region 5
Brad Ahbe – CDF

216406.0000_3rd QTR/sap

PROGRESS REPORT – Third Quarter 2015
Canton Drop Forge, Inc.
Canton, Ohio
U.S. EPA ID No. OHD00446S142

A. IDENTIFICATION OF FACILITY AND ACTIVITY

This quarterly Progress Report is required by the Consent Agreement and Final Order (CAFO), effective date September 18, 2014, between the U.S. EPA Region 5 and Canton Drop Forge, Inc. (CDF). The CAFO is for the CDF Facility located at 4575 Southway Street SW, Canton, Ohio. At the request of CDF, TRC Environmental Corporation (TRC) has prepared this Progress Report. As required by Paragraph 47 of the CAFO, this Progress Report discusses the work performed during the previous quarter, the data collected, and any problems encountered. This Report also includes a progress update on tasks specified on the project schedule.

B. STATUS OF WORK AT THE FACILITY AND PROGRESS DURING THE QUARTER

The CDF Ponds Closure Plan (Closure Plan), dated September 8, 2014, was approved by Ohio EPA on October 29, 2014. Implementation of the Closure Plan and related tasks are listed below.

(i) The status of the removal of oil-water emulsion from Pond Nos. 1 and 2.

All liquids from Pond No. 1 were removed during the last quarter of 2014, prior to remediation of the solids in Pond No. 1. Remediation and restoration of Pond 1 was completed during the first quarter of 2015. The rope skimmer for Pond No. 2 continues to operate on an as-needed basis during the quarter to remove oil that accumulated on the surface of the pond. Oil from the rope skimmer in Pond No. 2 is stored in an adjacent above ground storage tank pending proper disposal.

Initial dewatering for Pond No. 2 was implemented in early September 2015. Rather than installing a temporary stormceptor to treat the water, CDF is proceeding with the installation of a permanent, larger, stormceptor which requires some additional trenching and sloping. Although this results in a delay for the dewatering step and ultimately active remediation of Pond 2 of approximately one month, these steps are critical for successful remediation of the pond. Ohio EPA was notified of this delay on August 25, 2015. To prevent further project delays, water was treated using a bag filtration unit (see product information in Attachment 1) prior to recycling for reuse as process water within CDF's facility operations during completion of the permanent stormceptor installation. However, installation of the hook up to the City sewer system has recently been completed (October 6, 2015) and water unable to be treated or reused is discharged to the Stark County Sanitary Sewer with ultimate discharge to the City of Massillon's Waste Water Treatment Plant (WWTP).

(ii) The status of the excavation of oil-impacted bottom material from Pond Nos. 1 and 2.

Excavation of oil-impacted bottom material from Pond No. 2 will occur once dewatering is complete. This is discussed further under Project Schedule.

(iii) The status of the excavation of oil-affected soils adjacent to Pond Nos. 1 and 2.

Excavation of oil-impacted bottom material from Pond No. 2 will occur once the dewatering is complete. This is discussed further under Project Schedule.

(iv) The status of confirmatory sampling (as applicable).

No confirmatory sampling occurred during this quarter.

(v) The status of backfilling and restoration of Ponds Nos. 1 and 2.

Backfilling and restoration of Pond No. 1 was completed during the first quarter of 2015. No further backfilling or restoration of Ponds Nos. 1 and 2 occurred during this quarter.

C. PROBLEMS ENCOUNTERED DURING THE QUARTER

Implementation of Pond No. 2 remediation was delayed due to the installation of the larger and permanent stormceptor and final hook up to the City sewer system. No other problems were encountered during this quarter.

D. ACTIONS TAKEN TO RECTIFY PROBLEMS

Although the stormceptor is not in the footprint of the Pond 2 unit, some of the soil excavated for the stormceptor has been utilized to solidify some material from Pond 2 intended for disposal. TRC is scheduled to sample the soil for waste characterization the week of October 12, 2015. Ohio EPA visited CDF on September 29, 2015 and observed the progress of excavation for the stormceptor and performed a general site walkover.

CDF has been able to treat and recycle/reuse the Pond 2 water as process water within facility operations in accordance with the closure plan. However, installation of the hook up to the City sewer system has recently been completed (October 6, 2015) and water unable to be treated or reused is discharged to the Stark County Sanitary Sewer with ultimate discharge to the City of Massillon's WWTP.

Minor modifications to the trucking route were implemented for Pond 2 allowing easier exiting and less distance traveled across the property. The Pond unit boundary and the work areas are unchanged. Attachment 2 includes a figure showing the revised route.

E. PROJECT SCHEDULE

As indicated above, the remediation of Pond No. 2 was delayed until the sanitary sewer connection and dewatering is complete. Construction for the connection has since been completed. Therefore, remediation of Pond No. 2 will be initiated late mid- to late October. Ohio EPA is aware of this schedule and does not warrant an amendment to the approved Closure Plan. The project schedule and progress report are presented below by task:

Item	Task	Description of Status
1	Consent Agreement and Final Order U.S. EPA Docket No. RCRA-05-2014-0013	Effective date 9/18/2014.
2	Closure Plan Submittal	Received by Ohio EPA on September 9, 2014. Approved October 29, 2014.
3	Agency Review and 30-Day Public Notice Period	Submitted for public comment period ending October 17, 2014. Closure Plan approved October 29, 2014.
4	Installation/Implementation of Upgraded Oil Water Separator (OWS) System	Construction complete and the system is operational.
5	Contractor Procurement/Mobilization (including 10-Day Notification to Ohio EPA prior to mobilization)	Kick-off meeting held at CDF on November 19, 2014. Attendees included CDF, Ohio EPA, and TRC Environmental. The meeting served as the 10-day notification to Ohio EPA. Environmental Management Specialists, Inc. (EMS) was procured through CDF as the contractor to perform the excavation. TRC is performing oversight.
6	Pond 1 Remediation: - Dewatering, Excavation, Disposal - Visual Inspection (CDF/Ohio EPA) and Verification of Completion	Pond 1 remediation was initiated following the above 10-day notification. Dewatering, excavation, and disposal were near completion as of the close of the fourth quarter 2014, with removal of the bottom clay liner overlapping into the first quarter of 2015. Visual inspection by Ohio EPA to verify completion was performed January 20, 2015.
7	Pond 1 Backfill, Installation of Clay Liner	Pond 1 was backfilled late January 2015 and installation of the clay liner immediately followed.
8	Pond 2 Remediation: - Dewatering, Excavation, Disposal - Visual Inspection (CDF/Ohio EPA)	Initial dewatering began in September 2015 with Pond 2 water being treated and recycled for reuse within the CDF facility. Construction for the sewer connection is currently complete. Therefore, further dewatering and subsequent remediation of Pond No. 2 will be initiated into the fourth quarter 2015.
9	Pond 2 Installation of Clay Liner	To be implemented following completion of previous tasks.
10	Closure Certification Document (60 days of completion of the closure activities)	To be completed following conclusion of previous tasks.
11	Quarterly Progress Reports	Initiated 3rd quarter 2014.

ATTACHMENT 1

Bag Filter

BF400

ASME

Overview:

The BF400 ASME bag filter unit features four bag filter tanks and utilizes 7" x 30" bag filters for superior filtration from 1 to 100 micron for flows up to 400 GPM.

Features:

- No moving parts
- Skid mounted
- Fitted with bleed valves and pressure gauges
- Chambers constructed of 304L Stainless Steel
- Piping constructed of 304L stainless steel
- Stainless Steel inlet and outlet manifolds
- System can stand alone for sediment removal or be used in combination with filter equipment

Specs:

Max Flow	400 GPM
Material	304L Stainless Steel
Max PSI	150 PSI
Dry weight	800 lbs.
Footprint:	62" x 36"
Inlet x outlet	6" x 6" Flange

Accessories:

- Spillguard
- Suction and Discharge Hoses

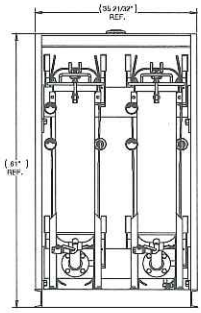

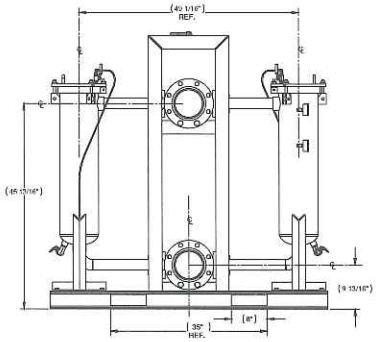

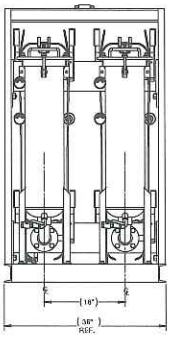

PUMPS • TANKS • FILTRATION • PIPE • SPILLGUARDS

Rain for Rent is a registered trademark of Western Oilfields Supply Company. Features and specifications are subject to change without notice.

Liquid Ingenuity
800-742-7246
rainforrent.com

ATTACHMENT 2

NOTES:

1. THE ENTRANCE SHALL BE MAINTAINED IN A CONDITION THAT WILL PREVENT TRACKING OF SEDIMENT ON TO PUBLIC RIGHT-OF-WAY, OR ROSS STREET. THIS MAY REQUIRE TOP DRESSING. REPAIR AND / OR CLEANOUT OF ANY MEASURES USED TO TRAP SEDIMENT.
2. WHEN NECESSARY, WHEELS SHALL BE CLEANED AT DECON PAD WITH HIGH PRESSURE WATER.

DETAIL FOR WORK AREA EXIT

LEGEND

- PROPERTY BOUNDARY
- WORK AREA
- TRUCK ROUTE (SEE NOTE 4)
- WORK AREA EXIT (SEE INSET)
- WORK AREA GATED ENTRANCE
- EXISTING MONITORING WELL
- POND UNIT
- GRAVELLED TRUCK LOADING CORRIDOR (SEE NOTE 4)
- AREA OF CONTAMINATION LIMITS

NOTES

1. THE EXTENT OF THE POND UNITS ARE BASED ON THE POND BANKS, AS DETAILED IN AVAILABLE AS-BUILT DOCUMENTATION, AND INCLUDES THE UNDERLYING WASTE, POND LINERS, BIOCELL, ETC.
2. THE AREA OF CONTAMINATION LIMITS DEFINES THE LIMITS FOR EQUIPMENT AND VEHICLE POSITIONING, WASTE LOADING FOR TRANSPORT, AND DECONTAMINATION PROCEDURES.
3. AERIAL PHOTO FROM BING MAPS, DATED 2012.
4. INSTALL CRUSHED ROAD GRAVEL (ODOT #2 GRAVEL; 1-1/2 TO 2-1/2 INCH) TO MINIMIZE RUTTING AND MUD TRACKING THROUGH THE WORK AREA. INSTALL ROAD GRAVEL ALONG OTHER PORTIONS OF THE TRUCKING ROUTING AS NECESSARY, AND AS DIRECTED BY OWNER.

N

0 60 120

APPROXIMATE SCALE IN FEET

PROJECT: CANTON DROP FORGE
CANTON, OHIO

TITLE: POND 2 UNIT
CONCEPTUAL LAYOUT

DRAWN BY: DGS	SCALE:	PROJ. NO.	216406.0000.01
CHECKED BY: KT	AS INDICATED	FILE NO.	216406.0000.01.01H.dwg
APPROVED BY: KT	DATE PRINTED:	FIGURE 4-2	
DATE: SEPTEMBER 2015			

TRC
1382 West Ninth Street, Suite 200
Cleveland, OH 44113
Phone: 216.344.3072
Fax: 216.344.3073

PLOT DATA
Drawing Name: J:_TRC\Canton Drop Forge\216406\0000\01_RCRA Closure\216406.0000.01.01H.dwg
Operator Name: STEHLE, DIANAH
Drawing Plot Scale: 0.386863
Dwg Size: 0.96 Mb
Plot Date: September 16, 2015
Plot Time: 6:54 AM
Attached Xref's: CDF Entire Site 02;
Attached Images:
Layout: Pond 2

1382 West Ninth Street, Suite 200
Cleveland, Ohio 44113

216.344.3072 PHONE
216.344.3073 FAX

www.TRCsolutions.com

July 14, 2015

RCRA Branch (LR-8J)
U.S. EPA, Region 5
77 West Jackson Boulevard
Chicago, Illinois 60604

Attention: Mr. Brian Kennedy

Reference: Quarterly Progress Report
Consent Agreement and Final Order (CAFO)
Docket No. RCRA-05-2014-0013
Project No. 216406.0000

Dear Mr. Kennedy:

TRC Environmental Corporation (TRC), is pleased to submit, on behalf of Canton Drop Forge (CDF), the attached Progress Report for the **Second Quarter 2015**, as agreed to in the Consent Agreement and Final Order (CAFO) journalized by the United States Environmental Protection Agency (U.S. EPA) on September 18, 2014.

Should you have any questions regarding the enclosed document, please contact me at (216) 344-3072 or via e-mail kteuscher@trcsolutions.com.

Sincerely,

TRC Environmental Corporation

Kathleen R. Teuscher

Kathleen R. Teuscher
Risk Assessor/Project Manager

cc: Erik Hagen – DERR CO, Ohio EPA
Don Vogel – DERR CO, Ohio EPA
Ron Shadrach – DHWM, NEDO
Eaton Weiler – U.S. EPA, Region 5
Brad Ahbe – CDF

PROGRESS REPORT – Second Quarter 2015
Canton Drop Forge, Inc.
Canton, Ohio
U.S. EPA ID No. OHD00446S142

A. IDENTIFICATION OF FACILITY AND ACTIVITY

This quarterly Progress Report is required by the Consent Agreement and Final Order (CAFO), effective date September 18, 2014, between the U.S. EPA Region 5 and Canton Drop Forge, Inc. (CDF). The CAFO is for the CDF Facility located at 4575 Southway Street SW, Canton, Ohio. At the request of CDF, TRC Environmental Corporation (TRC) has prepared this Progress Report. As required by Paragraph 47 of the CAFO, this Progress Report discusses the work performed during the previous quarter, the data collected, and any problems encountered. This Report also includes a progress update on tasks specified on the project schedule.

B. STATUS OF WORK AT THE FACILITY AND PROGRESS DURING THE QUARTER

The CDF Ponds Closure Plan (Closure Plan), dated September 8, 2014, was approved by Ohio EPA on October 29, 2014. Implementation of the Closure Plan and related tasks are listed below.

(i) The status of the removal of oil-water emulsion from Pond Nos. 1 and 2.

All liquids from Pond No. 1 were removed during the last quarter of 2014, prior to remediation of the solids in Pond No. 1. The rope skimmer for Pond No. 2 continues to operate on an as-needed basis during the quarter to remove oil that accumulated on the surface of the pond. Oil from the rope skimmer in Pond No. 2 is stored in an adjacent above ground storage tank pending proper disposal. Any remaining oil on Pond No. 2 will be removed upon implementation of remediation of Pond No. 2.

(ii) The status of the excavation of oil-impacted bottom material from Pond Nos. 1 and 2.

Bottom material included the biocell material encapsulated by the clay liner and the clay liner from Pond No. 1. The remaining removal work was performed in the first quarter of 2015 (i.e., January, 2015) to conclude this remedial phase. Documentation of waste disposal, volume of material removed, and activity reports was provided in the First Quarter 2015 Progress Report.

Excavation of oil-impacted bottom material from Pond No. 2 will occur once the sanitary sewer connection is completed. This is discussed further under Project Schedule.

(iii) The status of the excavation of oil-affected soils adjacent to Pond Nos. 1 and 2.

The remaining removal work for Pond No. 1 and removal of the old Oil Water Separator (OWS), along with impacted material surrounding the old OWS performed in the first quarter of 2015 (i.e., March, 2015). Documentation of waste disposal, volume of material removed, and activity reports was provided in the First Quarter 2015 Progress Report.

Excavation of oil-impacted bottom material from Pond No. 2 will occur once the sanitary sewer connection is completed. This is discussed further under Project Schedule.

(iv) The status of confirmatory sampling (as applicable).

No confirmatory sampling occurred during this quarter.

(v) The status of backfilling and restoration of Ponds Nos. 1 and 2.

Backfilling and restoration of Pond No. 1 was completed during the first quarter of 2015. Documentation of the backfill material was provided in the First Quarter 2015 Progress Report. No further backfilling or restoration of Ponds Nos. 1 and 2 occurred during this quarter.

C. PROBLEMS ENCOUNTERED DURING THE QUARTER

Implementation of Pond No. 2 remediation will occur once the sanitary sewer connection is completed which anticipated to be the end of August or early September 2015. Delays, such as due to permitting requirements, approvals, and weather have been minimal and installation is still on schedule. Otherwise, no problems were encountered during this quarter.

D. ACTIONS TAKEN TO RECTIFY PROBLEMS

Not applicable.

E. PROJECT SCHEDULE

As indicated above, the remediation of Pond No. 2 cannot occur until the sanitary sewer connection is completed. Construction for the connection began the week of April 13 and is anticipated to be complete by the end of August. Therefore, remediation of Pond No. 2 will not be initiated until late August or early September. Ohio EPA is aware of this schedule and did not believe it warranted an amendment to the approved Closure Plan. The project schedule and progress report are presented below by task:

Item	Task	Description of Status
1	Consent Agreement and Final Order U.S. EPA Docket No. RCRA-05-2014-0013	Effective date 9/18/2014.
2	Closure Plan Submittal	Received by Ohio EPA on September 9, 2014. Approved October 29, 2014
3	Agency Review and 30-day Public Notice Period	Submitted for public comment period ending October 17, 2014. Closure Plan Approved October 29, 2014
4	Installation/implementation of upgraded Oil Water Separator (OWS) system	Construction complete and the system is operational.
5	Contractor Procurement/Mobilization (including 10-Day Notification to Ohio EPA prior to mobilization)	Kick-off meeting held at CDF on November 19, 2014. Attendees included CDF, Ohio EPA, and TRC Environmental. The meeting served as the 10-day notification to Ohio EPA. Environmental Management Specialists, Inc. (EMS) was procured through CDF as the contractor to perform the excavation. TRC is performing oversight.

Item	Task	Description of Status
6	Pond 1 Remediation: - dewatering, excavation, disposal - visual inspection (CDF/Ohio EPA) and verification of completion	Pond 1 remediation was initiated following the above 10-day notification. Dewatering, excavation, and disposal were near completion as of the close of the fourth quarter 2014, with removal of the bottom clay liner overlapping into the first quarter of 2015. Visual inspection by Ohio EPA to verify completion was performed January 20, 2015.
7	Pond 1 backfill, installation of clay liner	Pond 1 was backfilled late January 2015 and installation of the clay liner immediately followed.
8	Pond 2 Remediation: - dewatering, excavation, disposal - visual inspection (CDF/Ohio EPA)	Construction for the sewer connection is anticipated to be complete by the end of August. Remediation of Pond No. 2 will be initiated following completion of the sanitary sewer connections (i.e., late August or early September).
9	Pond 2 installation of clay liner	To be implemented following completion of previous tasks.
10	Closure Certification Document (60 days of completion of the closure activities)	To be completed following conclusion of previous tasks.
11	Quarterly Progress Reports	Initiated 3rd quarter 2014.

TRC
Results you can rely on

1382 West Ninth Street, Suite 200
Cleveland, Ohio 44113

216.344.3072 PHONE
216.344.3073 FAX

www.TRCsolutions.com

January 14, 2015

RCRA Branch (LR-8J)
U.S. EPA, Region 5
77 West Jackson Boulevard
Chicago, Illinois 60604

Attention: Mr. Brian Kennedy

Reference: Quarterly Progress Report
Consent Agreement and Final Order (CAFO)
Docket No. RCRA-05-2014-0013
Project No. 216406.0000

Dear Mr. Kennedy:

TRC Environmental Corporation (TRC), is pleased to submit, on behalf of Canton Drop Forge (CDF), the attached Progress Report for the **Fourth Quarter 2014**, as agreed to in the Consent Agreement and Final Order (CAFO) journalized by the United States Environmental Protection Agency (U.S. EPA) on September 18, 2014.

Should you have any questions regarding the enclosed document, please contact me at (216) 344-3072 or via e-mail kteuscher@trcsolutions.com.

Sincerely,

TRC Environmental Corporation

Kathleen R. Teuscher

Kathleen R. Teuscher
Risk Assessor/Project Manager

cc: Erik Hagen – DERR CO, Ohio EPA
Don Vogel – DERR CO, Ohio EPA
Ron Shadrach – DHWM, NEDO
Eaton Weiler – U.S. EPA, Region 5
Brad Ahbe – CDF

216406.0000LTR/sap

PROGRESS REPORT – Fourth Quarter 2014
Canton Drop Forge, Inc.
Canton, Ohio
U.S. EPA ID No. OHD00446S142

A. IDENTIFICATION OF FACILITY AND ACTIVITY

This quarterly Progress Report is required by the Consent Agreement and Final Order (CAFO), effective date September 18, 2014, between the U.S. EPA Region 5 and Canton Drop Forge, Inc. (CDF). The CAFO is for the CDF Facility located at 4575 Southway Street SW, Canton, Ohio. At the request of CDF, TRC Environmental Corporation (TRC) has prepared this Progress Report. As required by Paragraph 47 of the CAFO, this Progress Report discusses the work performed during the previous quarter, the data collected, and any problems encountered. This Report also includes a progress update on tasks specified on the project schedule.

B. STATUS OF WORK AT THE FACILITY AND PROGRESS DURING THE QUARTER

The CDF Ponds Closure Plan (Closure Plan), dated September 8, 2014, was approved by Ohio EPA on October 29, 2014. Implementation of the Closure Plan and related tasks are listed below.

(i) The status of the removal of oil-water emulsion from Pond Nos. 1 and 2.

Construction of the upgraded oil-water separator (OWS) system has been completed. In the interim and until the upgraded OWS system was fully operational, CDF performed routine inspections of the existing oil-water separator to prevent discharges of oil to the ponds. The upgraded OWS was operational on December 12, 2014.

All liquids from Pond No. 1 were removed during November and December, 2014 in preparation for the remediation of the solids in Pond No. 1. The volume of oil-water emulsion removed off-site from frac tanks is approximately 20,000 gal. This includes the oil-water emulsion from the existing OWS that was removed during the routine inspections. The oil-water emulsion was pumped to a temporary frac tank pending final disposal and transported to Everclear of Ohio Ltd. (Everclear) in Austintown, Ohio as listed below.

Date	Invoice #	Description	Vol. (gal)
11/6/2014	26792	water with some used oil	4,000
11/10/2014	26795	water with some used oil	4,000
11/17/2014	26811	water with some used oil	4,000
12/16/2014	26852	water with some used oil	4,000
12/30/2014	26888	water with some used oil (from new OWS)	4,000

The disposal documentation has not been received from the disposal facility, and will be provided in the next quarterly report.

The rope skimmer for Pond No. 2 has been operating on an as-needed basis during the quarter to remove oil that accumulated on the surface of the pond. Oil from the rope skimmer in Pond No. 2 is stored in an adjacent above ground storage tank pending proper disposal. During inspections by TRC on October 24, 2014 and other times during the quarter, minimal separate phase oil was

observed on Pond No. 2 (see photographs in Attachment 3). Any remaining oil on Pond No. 2 will be removed upon implementation of remediation of Pond No. 2 scheduled for Spring 2015. Disposal documentation for liquids removed from Pond No. 2 will be provided upon receipt from the disposal facility.

(ii) The status of the excavation of oil-impacted bottom material from Pond Nos. 1 and 2.

Most of the oil-impacted bottom material from Pond No. 1 was removed for off-site disposal at Everclear by close of the fourth quarter. A minor amount of removal work is expected in January, 2015 to conclude this remedial phase. Bottom material includes the biocell material encapsulated by the clay liner and the clay liner. Results from samples collected for waste characterization are provided in Attachment 1. The volume of bottom materials removed from Pond No. 1 is approximately 7,238 tons at the close of the fourth quarter. Daily activity reports are provided in Attachment 2. Documentation of waste transport and disposal of the solid materials removed from the Pond 1 excavation has not been received from the disposal facility, and will be included with the next quarterly report. Photographs of excavation activities are provided in Attachment 3.

In order to monitor the work, the Ohio Environmental Protection Agency had personnel on-site on the following dates:

December 12, 2014
December 19, 2014
December 23, 2014

Excavation of oil-impacted bottom material from Pond No. 2 is scheduled for Spring 2015, but cannot occur until the sanitary sewer connection is completed.

(iii) The status of the excavation of oil-affected soils adjacent to Pond Nos. 1 and 2.

At the close of the fourth quarter of 2014, most of the oil-affected soil adjacent to Pond No. 1 had been removed. This material was disposed with the bottom material described above, and the volumes were not tracked separately. Documentation of waste transport and disposal of the solid materials removed from the sidewalls and adjacent soils of the Pond 1 excavation has not been received from the disposal facility, and will be included with the next quarterly report. Photographs showing the excavation of the adjacent soils are provided in Attachment 3.

Excavation of oil-affected soil adjacent to Pond No. 2 is scheduled for Spring 2015.

(iv) The status of confirmatory sampling (as applicable).

No confirmatory sampling was performed at close of the fourth quarter. Ohio EPA will perform a visual inspection of Pond No. 1 during January 2014 to provide concurrence that all residuals within the Pond No. 1 unit have been removed as described in the approved Closure Plan.

(v) The status of backfilling and restoration of Ponds Nos. 1 and 2.

Backfilling and restoration of Pond 1 is pending completion of the removal of all residuals from Pond 1. Remediation of Pond 2 is scheduled for Spring 2015.

C. PROBLEMS ENCOUNTERED DURING THE QUARTER

Minimal delays occurred due to extreme cold. Otherwise, no problems were encountered during this quarter.

D. ACTIONS TAKEN TO RECTIFY PROBLEMS

Not applicable.

E. PROJECT SCHEDULE

The project schedule and progress report is presented below by task:

Item	Task	Description of Status
1	Consent Agreement and Final Order U.S. EPA Docket No. RCRA-05-2014-0013	Effective date 9/18/2014.
2	Closure Plan Submittal	Received by Ohio EPA on September 9, 2014. Approved October 29, 2014
3	Agency Review and 30-day Public Notice Period	Submitted for public comment period ending October 17, 2014. Closure Plan Approved October 29, 2014
4	Installation/implementation of upgraded Oil Water Separator (OWS) system	Construction complete.
5	Contractor Procurement/Mobilization (including 10-Day Notification to Ohio EPA prior to mobilization)	Kick-off meeting held at CDF on November 19, 2014. Attendees included CDF, Ohio EPA, and TRC Environmental. The meeting served as the 10-day notification to Ohio EPA. Environmental Management Specialists, Inc. (EMS) is procured through CDF as the contractor performing the excavation. TRC is performing oversight.
6	Pond 1 Remediation: - dewatering, excavation, disposal - visual inspection (CDF/Ohio EPA) and verification of completion	Pond 1 remediation was initiated following the above 10-day notification. Dewatering, excavation, and disposal were near completion as of the close of the fourth quarter 2014, with removal of the bottom clay liner overlapping into the first quarter of 2015. Visual inspection by Ohio EPA to verify completion is scheduled for January 2015.
7	Pond 1 backfill, installation of clay liner	To be implemented pending completion of previous tasks.

Item	Task	Description of Status
8	Pond 2 Remediation: - dewatering, excavation, disposal - visual inspection (CDF/Ohio EPA)	To be initiated following completion of the remediation of Pond 1.
9	Pond 2 installation of clay liner	To be implemented following completion of previous tasks.
10	Closure Certification Document (60 days of completion of the closure activities)	To be completed following conclusion of previous tasks.
11	Quarterly Progress Reports	Initiated 3rd quarter 2014.

1

ATTACHMENT 1

WASTE CHARACTERIZATION ANALYTICAL DATA

Canton Drop Forge

Project No. 216406.0000

Waste Characterization Data Summary (Pond Bottom Material)

Analytical Group	Chemical	Regulatory Limt[1]	Pond 1 Bottom Material							
			240-38973-1 PB1-01 06/26/2014	240-38973-2 PB1-02 06/26/2014	240-38973-3 PB1-03 06/26/2014	240-38973-4 PB1-04 06/26/2014	240-38973-5 PB1-05 06/26/2014	240-38973-6 PB1-06 06/26/2014	240-38973-7 PB1-07 06/26/2014	240-38973-8 PB1-08 06/26/2014
GENERAL CHEM	CORROSIVITY BY PH SU	pH<2 or pH>12.5	7.58	7.44	0.100 U	7.74	7.66	7.52	7.14	7.53
GENERAL CHEM	FLASHPOINT DEGREES F	≥ 140 °F	>200	>200	>200	>200	>200	>200	>200	>200
METALS	ARSENIC-TCLP MG/L	5	**0.0061 J B**	**0.010 J B**	**0.010 J B**	**0.0096 J B**	**0.0073 J B**	**0.010 J B**	**0.018 J B**	**0.012 J B**
METALS	BARIUM-TCLP MG/L	100	**1.2 J**	**1.6 J**	**1.3 J**	**1.7 J**	**1.4 J**	**0.99 J**	**0.46 J**	**1.3 J**
METALS	CADMIUM-TCLP MG/L	1	0.10 U J	0.10 U J	0.10 U J	0.10 U J	0.10 U J	0.10 U J	0.10 U J	0.10 U J
METALS	CHROMIUM-TCLP MG/L	5	0.50 U	0.05 U	0.05 U	0.05 U	0.05 U	0.05 U	0.05 U	0.05 U
METALS	LEAD-TCLP MG/L	5	**0.0071 J B**	**0.0026 J B**	**0.0064 J B**	**0.031 J B**	**0.0025 J B**	**0.011 J B**	**0.0040 J B**	**0.011 J B**
METALS	MERCURY-TCLP MG/L	0.2	0.0020 U	0.0020 U	0.0020 U	0.0020 U	0.0020 U	0.0020 U	0.0020 U	0.0020 U
METALS	SELENIUM-TCLP MG/L	1	0.25 U	0.25 U	0.25 U	0.25 U	0.25 U	**0.0059 J B**	**0.0054 J B**	0.25 U
METALS	SILVER-TCLP MG/L	5	0.50 U	0.50 U	0.50 U	0.50 U	0.50 U	0.50 U	0.50 U	0.50 U
SEMI-VOLATILE	1,4-DICHLOROBENZENE-TCLP MG/L	7.5	0.0040 U	0.0040 U	0.0040 U	0.0040 U	0.0040 U	0.0040 U	0.0040 U	0.0040 U
SEMI-VOLATILE	2,4,5-TRICHLOROPHENOL-TCLP MG/L	400	0.020 U	0.020 U	0.020 U	0.020 U	0.020 U	0.020 U	0.020 U	0.020 U
SEMI-VOLATILE	2,4,6-TRICHLOROPHENOL-TCLP MG/L	2	0.020 U	0.020 U	0.020 U	0.020 U	0.020 U	0.020 U	0.020 U	0.020 U
SEMI-VOLATILE	2,4-DINITROTOLUENE-TCLP MG/L	0.13	0.020 U	0.020 U	0.020 U	0.020 U	0.020 U	0.020 U	0.020 U	0.020 U
SEMI-VOLATILE	2-METHYLPHENOL-TCLP MG/L	200 [2]	0.0040 U	0.0040 U	0.0040 U	0.0040 U	0.0040 U	0.0040 U	0.0040 U	0.0040 U
SEMI-VOLATILE	3 & 4 METHYLPHENOL-TCLP MG/L	200 [2]	0.040 U	0.040 U	0.040 U	0.040 U	0.040 U	0.040 U	**0.00088 J**	0.040 U
SEMI-VOLATILE	HEXACHLOROBENZENE-TCLP MG/L	0.13	0.020 U	0.020 U	0.020 U	0.020 U	0.020 U	0.020 U	0.020 U	0.020 U
SEMI-VOLATILE	HEXACHLOROBUTADIENE-TCLP MG/L	0.5	0.020 U	0.020 U	0.020 U	0.020 U	0.020 U	0.020 U	0.020 U	0.020 U
SEMI-VOLATILE	HEXACHLOROETHANE-TCLP MG/L	3	0.020 U	0.020 U	0.020 U	0.020 U	0.020 U	0.020 U	0.020 U	0.020 U
SEMI-VOLATILE	NITROBENZENE-TCLP MG/L	2	0.0040 U	0.0040 U	0.0040 U	0.0040 U	0.0040 U	0.0040 U	0.0040 U	0.0040 U
SEMI-VOLATILE	PENTACHLOROPHENOL-TCLP MG/L	100	0.040 U	0.040 U	0.040 U	0.040 U	0.040 U	0.040 U	0.040 U	0.040 U
SEMI-VOLATILE	PYRIDINE-TCLP MG/L	5	0.020 U	0.020 U	0.020 U	0.020 U	0.020 U	0.020 U	0.020 U	0.020 U
VOLATILES	1,1-DICHLOROETHENE-TCLP MG/L	0.7	0.025 U	0.025 U	0.025 U	0.025 U	0.025 U	0.025 U	0.025 U	0.025 U
VOLATILES	1,2-DICHLOROETHANE-TCLP MG/L	0.5	0.025 U	0.025 U	0.025 U	0.025 U	0.025 U	0.025 U	0.025 U	0.025 U
VOLATILES	2-BUTANONE (MEK)-TCLP MG/L	200	0.25 U	0.25 U	0.25 U	**0.038 J**	0.25 U	0.25 U	0.25 U	0.25 U
VOLATILES	BENZENE-TCLP MG/L	0.5	0.025 U	0.025 U	0.025 U	0.025 U	0.025 U	0.025 U	0.025 U	0.025 U
VOLATILES	CARBON TETRACHLORIDE-TCLP MG/L	0.5	0.025 U	0.025 U	0.025 U	0.025 U	0.025 U	0.025 U	0.025 U	0.025 U
VOLATILES	CHLOROBENZENE-TCLP MG/L	100	0.025 U	0.025 U	0.025 U	0.025 U	0.025 U	0.025 U	0.025 U	0.025 U
VOLATILES	CHLOROFORM-TCLP MG/L	6	0.025 U	0.025 U	0.025 U	0.025 U	0.025 U	0.025 U	0.025 U	0.025 U
VOLATILES	TETRACHLOROETHENE-TCLP MG/L	0.7	0.025 U	0.025 U	0.025 U	0.025 U	0.025 U	0.025 U	0.025 U	0.025 U
VOLATILES	TRICHLOROETHENE-TCLP MG/L	0.5	0.025 U	0.025 U	0.025 U	0.025 U	0.025 U	0.025 U	0.025 U	0.025 U
VOLATILES	VINYL CHLORIDE-TCLP MG/L	0.2	0.025 U	0.025 U	0.025 U	0.025 U	0.025 U	0.025 U	0.025 U	0.025 U

Bold = detected concentration

[1] As presented in 40 CFR Part 261 Subpart C.

[2] If o-, m-, and p-Cresol concentrations cannot be differentiated, the total cresol (D026) concentration is used. The regulatory level of total cresol is 200 mg/l.

Canton Drop Forge

Project No. 216406.0000

Waste Characterization Data Summary (Pond Bottom Material)

Analytical Group	Chemical	Regulatory Limt[1]					Pond 1 Soil Borings			
			240-38973-9 PB1-09 06/26/2014	240-38973-10 PB1-10 06/26/2014	240-38973-11 PB1-11 06/26/2014	240-38973-12 PB1-12 06/26/2014	240-38973-28 P1-SB-01 06/26/2014	240-38973-29 P1-SB-02 06/26/2014	240-38973-30 P1-SB-03 06/26/2014	240-38973-13 PB2-01 06/24/2014
GENERAL CHEM	CORROSIVITY BY PH SU	pH<2 or pH>12.5	7.60	7.82	7.20	7.81	9.94	6.14	8.19	7.65
GENERAL CHEM	FLASHPOINT DEGREES F	≥ 140 °F	>200	>200	>200	>200	>200	>200	>200	>200
METALS	ARSENIC-TCLP MG/L	5	**0.0096 J B**	**0.011 J B**	**0.0093 J**	**0.0082 J**	**0.0036 J B**	**0.50 U**	**0.0045 J B**	**0.11 J**
METALS	BARIUM-TCLP MG/L	100	**1.4 J**	**0.53 J**	**2.1 J**	**0.84 J**	**0.32 J**	**0.073 J**	**0.80 J**	**1.4 J**
METALS	CADMIUM-TCLP MG/L	1	0.10 U J	0.10 U J	0.10 U	0.10 U	0.10 U	0.10 U	**0.0016 J**	0.10 U
METALS	CHROMIUM-TCLP MG/L	5	0.05 U	0.05 U	0.05 U	0.05 U	0.05 U	0.05 U	0.05 U	0.05 U
METALS	LEAD-TCLP MG/L	5	0.50 U	**0.0027 J B**	**0.0028 J**	0.50 U	0.50 U	**0.0038 J**	0.50 U	0.50 U
METALS	MERCURY-TCLP MG/L	0.2	0.0020 U	0.0020 U	0.0020 U	0.0020 U	0.0020 U	0.0020 U	0.0020 U	0.0020 U
METALS	SELENIUM-TCLP MG/L	1	0.25 U	0.25 U	0.25 U	**0.0096 J B**	**0.0077 J B**	**0.0066 J B**	**0.0095 J B**	**0.013 J B**
METALS	SILVER-TCLP MG/L	5	0.50 U	0.50 U	0.50 U	0.50 U	0.50 U	0.50 U	0.50 U	0.50 U
SEMI-VOLATILE	1,4-DICHLOROBENZENE-TCLP MG/L	7.5	0.0040 U	0.0040 U	0.0040 U	0.0040 U	0.0040 U	0.0040 U	0.0040 U	0.0040 U
SEMI-VOLATILE	2,4,5-TRICHLOROPHENOL-TCLP MG/L	400	0.020 U	0.020 U	0.020 U	0.020 U	0.020 U	0.020 U	0.020 U	0.020 U
SEMI-VOLATILE	2,4,6-TRICHLOROPHENOL-TCLP MG/L	2	0.020 U	0.020 U	0.020 U	0.020 U	0.020 U	0.020 U	0.020 U	0.020 U
SEMI-VOLATILE	2,4-DINITROTOLUENE-TCLP MG/L	0.13	0.020 U	0.020 U	0.020 U	0.020 U	0.020 U	0.020 U	0.020 U	0.020 U
SEMI-VOLATILE	2-METHYLPHENOL-TCLP MG/L	200 [2]	0.0040 U	0.0040 U	0.0040 U	0.0040 U	0.0040 U	0.0040 U	0.0040 U	0.0040 U
SEMI-VOLATILE	3 & 4 METHYLPHENOL-TCLP MG/L	200 [2]	0.040 U	0.040 U	0.040 U	0.040 U	0.040 U	0.040 U	0.040 U	0.040 U
SEMI-VOLATILE	HEXACHLOROBENZENE-TCLP MG/L	0.13	0.020 U	0.020 U	0.020 U	0.020 U	0.020 U	0.020 U	0.020 U	0.020 U
SEMI-VOLATILE	HEXACHLOROBUTADIENE-TCLP MG/L	0.5	0.020 U	0.020 U	0.020 U	0.020 U	0.020 U	0.020 U	0.020 U	0.020 U
SEMI-VOLATILE	HEXACHLOROETHANE-TCLP MG/L	3	0.020 U	0.020 U	0.020 U	0.020 U	0.020 U	0.020 U	0.020 U	0.020 U
SEMI-VOLATILE	NITROBENZENE-TCLP MG/L	2	0.0040 U	0.0040 U	0.0040 U	0.0040 U	0.0040 U	0.0040 U	0.0040 U	0.0040 U
SEMI-VOLATILE	PENTACHLOROPHENOL-TCLP MG/L	100	0.040 U	0.040 U	0.040 U	0.040 U	0.040 U	0.040 U	0.040 U	0.040 U
SEMI-VOLATILE	PYRIDINE-TCLP MG/L	5	0.020 U	0.020 U	0.020 U	0.020 U	0.020 U	0.020 U	0.020 U	0.020 U
VOLATILES	1,1-DICHLOROETHENE-TCLP MG/L	0.7	0.025 U	0.025 U	0.025 U	0.025 U	0.025 U	0.025 U	0.025 U	0.025 U
VOLATILES	1,2-DICHLOROETHANE-TCLP MG/L	0.5	0.025 U	0.025 U	0.025 U	0.025 U	0.025 U	0.025 U	0.025 U	0.025 U
VOLATILES	2-BUTANONE (MEK)-TCLP MG/L	200	**0.12 J**	0.25 U	0.25 U	0.25 U	0.25 U	0.25 U	0.25 U	0.25 U
VOLATILES	BENZENE-TCLP MG/L	0.5	0.025 U	0.025 U	0.025 U	0.025 U	0.025 U	0.025 U	0.025 U	0.025 U
VOLATILES	CARBON TETRACHLORIDE-TCLP MG/L	0.5	0.025 U	0.025 U	0.025 U	0.025 U	0.025 U-*	0.025 U-*	0.025 U-*	0.025 U
VOLATILES	CHLOROBENZENE-TCLP MG/L	100	0.025 U	0.025 U	0.025 U	0.025 U	0.025 U	0.025 U	0.025 U	0.025 U
VOLATILES	CHLOROFORM-TCLP MG/L	6	0.025 U	0.025 U	0.025 U	0.025 U	0.025 U	0.025 U	0.025 U	0.025 U
VOLATILES	TETRACHLOROETHENE-TCLP MG/L	0.7	0.025 U	0.025 U	0.025 U	0.025 U	0.025 U	0.025 U	0.025 U	0.025 U
VOLATILES	TRICHLOROETHENE-TCLP MG/L	0.5	0.025 U	0.025 U	0.025 U	0.025 U	0.025 U-*	0.025 U-*	0.025 U-*	0.025 U
VOLATILES	VINYL CHLORIDE-TCLP MG/L	0.2	0.025 U	0.025 U	0.025 U	0.025 U	0.025 U	0.025 U	0.025 U	0.025 U

Bold = detected concentration

[1] As presented in 40 CFR Part 261 Subpart C.

[2] If o-, m-, and p-Cresol concentrations cannot be differentiated, the total cre

Canton Drop Forge

Project No. 216406.0000

Waste Characterization Data Summary (Pond Bottom Material)

Analytical Group	Chemical	Regulatory Limt[1]	Pond 2 Bottom Material							
			240-38973-14 PB2-02 06/24/2014	240-38973-15 PB2-03 06/24/2014	240-38973-16 PB2-04 06/24/2014	240-38973-17 PB2-05 06/24/2014	240-38973-18 PB2-06 06/24/2014	240-38973-19 PB2-07 06/24/2014	240-38973-20 PB2-08 06/24/2014	240-38973-21 PB2-09 06/24/2014
GENERAL CHEM	CORROSIVITY BY PH SU	pH<2 or pH>12.5	7.36	8.06	8.04	8.58	7.84	8.02	7.75	7.75
GENERAL CHEM	FLASHPOINT DEGREES F	≥ 140 °F	>200	>200	>200	>200	>200	>200	>200	>200
METALS	ARSENIC-TCLP MG/L	5	**0.13 J**	**0.44 J**	**0.62**	**0.060 J B**	**0.21 J**	**0.20 J**	**0.14 J**	**0.16 J**
METALS	BARIUM-TCLP MG/L	100	**1.2 J**	**1.2 J**	**1.2 J**	**1.5 J**	**1.4 J**	**1.2 J**	**1.2 J**	**1.3 J**
METALS	CADMIUM-TCLP MG/L	1	**0.00071 J**	0.10 U	0.10 U	**0.00090 J**	0.10 U	**0.0019 J**	**0.0039 J**	**0.0011 J**
METALS	CHROMIUM-TCLP MG/L	5	0.05 U	0.05 U	0.05 U	0.05 U	0.05 U	0.05 U	0.05 U	0.05 U
METALS	LEAD-TCLP MG/L	5	**0.0038 J**	**0.0074 J**	**0.0052 J**	0.50 U	**0.0054 J**	**0.012 J**	**0.0073 J**	**0.0063 J**
METALS	MERCURY-TCLP MG/L	0.2	0.0020 U	0.0020 U	0.0020 U	0.0020 U	0.0020 U	0.0020 U	0.0020 U	0.0020 U
METALS	SELENIUM-TCLP MG/L	1	**0.014 J B**	**0.012 J B**	**0.011 J B**	**0.015 J B**	**0.011 J B**	**0.012 J B**	**0.0086 J B**	**0.012 J B**
METALS	SILVER-TCLP MG/L	5	0.50 U	0.50 U	0.50 U	0.50 U	0.50 U	0.50 U	0.50 U	0.50 U
SEMI-VOLATILE	1,4-DICHLOROBENZENE-TCLP MG/L	7.5	0.0040 U	0.0040 U	0.0040 U	0.0040 U	0.0040 U	0.0040 U	0.0040 U	0.0040 U
SEMI-VOLATILE	2,4,5-TRICHLOROPHENOL-TCLP MG/L	400	0.020 U	0.020 U	0.020 U	0.020 U	0.020 U	0.020 U	0.020 U	0.020 UJ
SEMI-VOLATILE	2,4,6-TRICHLOROPHENOL-TCLP MG/L	2	0.020 U	0.020 U	0.020 U	0.020 U	0.020 U	0.020 U	0.020 U	0.020 UJ
SEMI-VOLATILE	2,4-DINITROTOLUENE-TCLP MG/L	0.13	0.020 U	0.020 U	0.020 U	0.020 U	0.020 U	0.020 U	0.020 U	0.020 U
SEMI-VOLATILE	2-METHYLPHENOL-TCLP MG/L	200 [2]	0.0040 U	0.0040 U	0.0040 U	0.0040 U	0.0040 U	0.0040 U	0.0040 U	0.0040 UJ
SEMI-VOLATILE	3 & 4 METHYLPHENOL-TCLP MG/L	200 [2]	0.040 U	0.040 U	0.040 U	0.040 U	0.040 U	0.040 U	0.040 U	0.0040 UJ
SEMI-VOLATILE	HEXACHLOROBENZENE-TCLP MG/L	0.13	0.020 U	0.020 U	0.020 U	0.020 U	0.020 U	0.020 U	0.020 U	0.020 U
SEMI-VOLATILE	HEXACHLOROBUTADIENE-TCLP MG/L	0.5	0.020 U	0.020 U	0.020 U	0.020 U	0.020 U	0.020 U	0.020 U	0.020 U
SEMI-VOLATILE	HEXACHLOROETHANE-TCLP MG/L	3	0.020 U	0.020 U	0.020 U	0.020 U	0.020 U	0.020 U	0.020 U	0.020 U
SEMI-VOLATILE	NITROBENZENE-TCLP MG/L	2	0.0040 U	0.0040 U	0.0040 U	0.0040 U	0.0040 U	0.0040 U	0.0040 U	0.0040 U
SEMI-VOLATILE	PENTACHLOROPHENOL-TCLP MG/L	100	0.040 U	0.040 U	0.040 U	0.040 U	0.040 U	0.040 U	0.040 U	0.040 UJ
SEMI-VOLATILE	PYRIDINE-TCLP MG/L	5	0.020 U	0.020 U	0.020 U	0.020 U	0.020 U	0.020 U	0.020 U	0.020 U
VOLATILES	1,1-DICHLOROETHENE-TCLP MG/L	0.7	0.025 U	0.025 U	0.025 U	0.025 U	0.025 U	0.025 U	0.025 U	0.025 U
VOLATILES	1,2-DICHLOROETHANE-TCLP MG/L	0.5	0.025 U	0.025 U	0.025 U	0.025 U	0.025 U	0.025 U	0.025 U	0.025 U
VOLATILES	2-BUTANONE (MEK)-TCLP MG/L	200	0.25 U	0.25 U	0.25 U	0.25 U	0.25 U	0.25 U	0.25 U	0.25 U
VOLATILES	BENZENE-TCLP MG/L	0.5	0.025 U	0.025 U	0.025 U	0.025 U	0.025 U	0.025 U	0.025 U	0.025 U
VOLATILES	CARBON TETRACHLORIDE-TCLP MG/L	0.5	0.025 U	0.025 U	0.025 U	0.025 U	0.025 U	0.025 U	0.025 U	0.025 U
VOLATILES	CHLOROBENZENE-TCLP MG/L	100	0.025 U	0.025 U	0.025 U	0.025 U	0.025 U	0.025 U	0.025 U	0.025 U
VOLATILES	CHLOROFORM-TCLP MG/L	6	0.025 U	0.025 U	0.025 U	0.025 U	0.025 U	0.025 U	0.025 U	0.025 U
VOLATILES	TETRACHLOROETHENE-TCLP MG/L	0.7	0.025 U	0.025 U	0.025 U	0.025 U	0.025 U	0.025 U	0.025 U	0.025 U
VOLATILES	TRICHLOROETHENE-TCLP MG/L	0.5	0.025 U	0.025 U	0.025 U	0.025 U	0.025 U	0.025 U	0.025 U	0.025 U
VOLATILES	VINYL CHLORIDE-TCLP MG/L	0.2	0.025 U	0.025 U	0.025 U	0.025 U	0.025 U	0.025 U	0.025 U	0.025 U

Bold = detected concentration

[1] As presented in 40 CFR Part 261 Subpart C.

[2] If o-, m-, and p-Cresol concentrations cannot be differentiated, the total cre

Canton Drop Forge

Project No. 216406.0000

Waste Characterization Data Summary (Pond Bottom Material)

Analytical Group	Chemical	Regulatory Limt[1]					Pond 2 Soil Borings		
			240-38973-21 RE PB2-09 06/24/2014	240-38973-22 PB2-10 06/24/2014	240-38973-23 PB2-11 06/24/2014	240-38973-24 PB2-12 06/24/2014	240-38973-25 P2-SB-01 06/26/2014	240-38973-26 P2-SB-02 06/26/2014	240-38973-27 P2-SB-03 06/26/2014
GENERAL CHEM	CORROSIVITY BY PH SU	pH<2 or pH>12.5		7.69	7.55	7.65	9.54	11.5	7.52
GENERAL CHEM	FLASHPOINT DEGREES F	≥ 140 °F		>200	>200	>200	>200	>200	>200
METALS	ARSENIC-TCLP MG/L	5		**0.14 J B**	**0.18 J B**	**0.35 J B**	**0.0063 J B**	**0.0045 J B**	**0.012 J B**
METALS	BARIUM-TCLP MG/L	100		**1.1 J**	**1.2 J**	**1.2 J**	**1.2 J**	**0.21 J**	**1.8 J**
METALS	CADMIUM-TCLP MG/L	1		**0.0020 J**	**0.00086 J**	0.10 U	0.10 U	0.10 U	**0.0023 J**
METALS	CHROMIUM-TCLP MG/L	5	0.05 U	0.05 U	0.05 U	0.05 U	0.05 U	0.05 U	0.05 U
METALS	LEAD-TCLP MG/L	5		**0.0060 J**	**0.0067 J**	**0.0049 J**	0.50 U	0.50 U	**0.0060 J**
METALS	MERCURY-TCLP MG/L	0.2		0.0020 U	0.0020 U	0.0020 U	0.0020 U	0.0020 U	0.0020 U
METALS	SELENIUM-TCLP MG/L	1		**0.015 J B**	**0.014 J B**	**0.0097 J B**	**0.013 J B**	**0.011 J B**	**0.011 J B**
METALS	SILVER-TCLP MG/L	5		0.50 U	0.50 U	0.50 U	0.50 U	0.50 U	0.50 U
SEMI-VOLATILE	1,4-DICHLOROBENZENE-TCLP MG/L	7.5	0.0040 U H R	0.0040 U	0.0040 U	0.0040 U	0.0040 U	0.0040 U	0.0040 U
SEMI-VOLATILE	2,4,5-TRICHLOROPHENOL-TCLP MG/L	400	0.020 U H R	0.020 U	0.020 U	0.020 U	0.020 U	0.020 U	0.020 U
SEMI-VOLATILE	2,4,6-TRICHLOROPHENOL-TCLP MG/L	2	0.020 U H R	0.020 U	0.020 U	0.020 U	0.020 U	0.020 U	0.020 U
SEMI-VOLATILE	2,4-DINITROTOLUENE-TCLP MG/L	0.13	0.020 U H R	0.020 U	0.020 U	0.020 U	0.020 U	0.020 U	0.020 U
SEMI-VOLATILE	2-METHYLPHENOL-TCLP MG/L	200 [2]	0.0040 U H R	0.0040 U	0.0040 U	0.0040 U	0.0040 U	0.0040 U	0.0040 U
SEMI-VOLATILE	3 & 4 METHYLPHENOL-TCLP MG/L	200 [2]	0.040 U H R	0.040 U	0.040 U	0.040 U	**0.0051 J**	0.040 U	0.040 U
SEMI-VOLATILE	HEXACHLOROBENZENE-TCLP MG/L	0.13	0.020 U H R	0.020 U	0.020 U	0.020 U	0.020 U	0.020 U	0.020 U
SEMI-VOLATILE	HEXACHLOROBUTADIENE-TCLP MG/L	0.5	0.020 U H R	0.020 U	0.020 U	0.020 U	0.020 U	0.020 U	0.020 U
SEMI-VOLATILE	HEXACHLOROETHANE-TCLP MG/L	3	0.020 U H R	0.020 U	0.020 U	0.020 U	0.020 U	0.020 U	0.020 U
SEMI-VOLATILE	NITROBENZENE-TCLP MG/L	2	0.0040 U H R	0.0040 U	0.0040 U	0.0040 U	0.0040 U	0.0040 U	0.0040 U
SEMI-VOLATILE	PENTACHLOROPHENOL-TCLP MG/L	100	0.040 U H R	0.040 U	0.040 U	0.040 U	0.040 U	0.040 U	0.040 U
SEMI-VOLATILE	PYRIDINE-TCLP MG/L	5	0.020 U H R	0.020 U	0.020 U	0.020 U	0.020 U	0.020 U	0.020 U
VOLATILES	1,1-DICHLOROETHENE-TCLP MG/L	0.7		0.025 U	0.025 U	0.025 U	0.025 U	0.025 U	0.025 U
VOLATILES	1,2-DICHLOROETHANE-TCLP MG/L	0.5		0.025 U	0.025 U	0.025 U	0.025 U	0.025 U	0.025 U
VOLATILES	2-BUTANONE (MEK)-TCLP MG/L	200		0.25 U	0.25 U	0.25 U	0.25 U	0.25 U	0.25 U
VOLATILES	BENZENE-TCLP MG/L	0.5		0.025 U	0.025 U	0.025 U	0.025 U	0.025 U	0.025 U
VOLATILES	CARBON TETRACHLORIDE-TCLP MG/L	0.5		0.025 U-*	0.025 U-*	0.025 U-*	0.025 U-*	0.025 U-*	0.025 U-*
VOLATILES	CHLOROBENZENE-TCLP MG/L	100		0.025 U	0.025 U	0.025 U	0.025 U	0.025 U	0.025 U
VOLATILES	CHLOROFORM-TCLP MG/L	6		0.025 U	0.025 U	0.025 U	0.025 U	0.025 U	0.025 U
VOLATILES	TETRACHLOROETHENE-TCLP MG/L	0.7		0.025 U	0.025 U	0.025 U	0.025 U	0.025 U	0.025 U
VOLATILES	TRICHLOROETHENE-TCLP MG/L	0.5		0.025 U-*	0.025 U-*	0.025 U-*	0.025 U-*	0.025 U-*	0.025 U-*
VOLATILES	VINYL CHLORIDE-TCLP MG/L	0.2		0.025 U	0.025 U	0.025 U	0.025 U	0.025 U	0.025 U

Bold = detected concentration

[1] As presented in 40 CFR Part 261 Subpart C.

[2] If o-, m-, and p-Cresol concentrations cannot be differentiated, the total cre:

Canton Drop Forge

Project No. 216406.0000

Waste Characterization Data Summary (Pond Bottom Material - Composite Samples)

Chemical	Regulator Limit	240-38973-33 PB-1 COMP 06/27/2014	240-38973-35 P1-SB COMP 06/27/2014	240-38973-34 PB-2 COMP 06/27/2014	240-38973-36 P2-SB COMP 06/27/2014
HALOGENS, EXTRACTABLE ORGANIC MG/KG	1000 [1]	290 U	220 U	510 U	220 U
PAINT FILTER NONE	-- [2]	POS	NEG	POS	NEG

[1] According to EPA's Rebuttable Presumption Rule (40 CFR §261.3(a)(2)(v)) any used oil containing 1000 ppm of total halogens is assumed to have been mixed with hazardous waste and consequently the entire used oil/waste mixture constitutes hazardous waste. However, the rule also allows generators to rebut the presumption through further demonstrations.

[2] A specified amount of material is placed in a paint filter. If any portion of the material passes through and drops from the filter within the 5 minute test period, the material is deemed to contain free liquids. Waste containing free liquids may be placed in a landfill if the landfill has a liner and leachate collection and removal system that meet the requirements of § 264.301(a) or the liquid waste or waste containing free liquids is treated or stabilized, chemically or physically (e.g., by mixing with a sorbent solid), so that free liquids are no longer present.

Canton Drop Forge

Project No. 216406.0000

Waste Characterization Data Summary (Pond 2 Water)

ANAL_GRP	Chemical	240-38973-31 P2-SW-01 06/26/2014	240-38973-32 TB-01 06/26/2014
METALS	ARSENIC UG/L	5.1 J	
METALS	BARIUM UG/L	110 J B	
METALS	CADMIUM UG/L	2.0 U ^	
METALS	CHROMIUM UG/L	8.8	
METALS	LEAD UG/L	3.4	
METALS	MERCURY UG/L	0.20 U	
METALS	SELENIUM UG/L	5.0 U	
METALS	SILVER UG/L	5.0 U	
SEMI-VOLATILE	1,2,4-TRICHLOROBENZENE UG/L	0.99 U	
SEMI-VOLATILE	1,2-DICHLOROBENZENE UG/L	0.99 U	
SEMI-VOLATILE	1,3-DICHLOROBENZENE UG/L	0.99 U	
SEMI-VOLATILE	1,4-DICHLOROBENZENE UG/L	0.99 U	
SEMI-VOLATILE	2,2'-OXYBIS[1-CHLOROPROPANE] UG/L	0.99 U	
SEMI-VOLATILE	2,4,5-TRICHLOROPHENOL UG/L	5.0 U	
SEMI-VOLATILE	2,4,6-TRICHLOROPHENOL UG/L	5.0 U	
SEMI-VOLATILE	2,4-DICHLOROPHENOL UG/L	2.0 U	
SEMI-VOLATILE	2,4-DIMETHYLPHENOL UG/L	2.0 U	
SEMI-VOLATILE	2,4-DINITROPHENOL UG/L	5.0 U	
SEMI-VOLATILE	2,4-DINITROTOLUENE UG/L	5.0 U	
SEMI-VOLATILE	2,6-DINITROTOLUENE UG/L	5.0 U	
SEMI-VOLATILE	2-CHLORONAPHTHALENE UG/L	0.99 U	
SEMI-VOLATILE	2-CHLOROPHENOL UG/L	0.99 U	
SEMI-VOLATILE	2-METHYLNAPHTHALENE UG/L	0.20 U	
SEMI-VOLATILE	2-METHYLPHENOL UG/L	0.99 U	
SEMI-VOLATILE	2-NITROANILINE UG/L	2.0 U	
SEMI-VOLATILE	2-NITROPHENOL UG/L	2.0 U	
SEMI-VOLATILE	3 & 4 METHYLPHENOL UG/L	2.0 U	
SEMI-VOLATILE	3,3'-DICHLOROBENZIDINE UG/L	5.0 U	
SEMI-VOLATILE	3-NITROANILINE UG/L	2.0 U	
SEMI-VOLATILE	4,6-DINITRO-2-METHYLPHENOL UG/L	5.0 U J	
SEMI-VOLATILE	4-BROMOPHENYL PHENYL ETHER UG/L	2.0 U	
SEMI-VOLATILE	4-CHLORO-3-METHYLPHENOL UG/L	2.0 U	
SEMI-VOLATILE	4-CHLOROANILINE UG/L	2.0 U	
SEMI-VOLATILE	4-CHLOROPHENYL PHENYL ETHER UG/L	2.0 U	
SEMI-VOLATILE	4-NITROANILINE UG/L	2.0 U	
SEMI-VOLATILE	4-NITROPHENOL UG/L	5.0 U	
SEMI-VOLATILE	ACENAPHTHENE UG/L	0.20 U	
SEMI-VOLATILE	ACENAPHTHYLENE UG/L	0.20 U	
SEMI-VOLATILE	ANTHRACENE UG/L	0.20 U	
SEMI-VOLATILE	BENZO[A]ANTHRACENE UG/L	0.20 U	
SEMI-VOLATILE	BENZO[A]PYRENE UG/L	0.20 U	
SEMI-VOLATILE	BENZO[B]FLUORANTHENE UG/L	0.20 U	
SEMI-VOLATILE	BENZO[G,H,I]PERYLENE UG/L	0.20 U	
SEMI-VOLATILE	BENZO[K]FLUORANTHENE UG/L	0.20 U	
SEMI-VOLATILE	BIS(2-CHLOROETHOXY)METHANE UG/L	0.99 U	
SEMI-VOLATILE	BIS(2-CHLOROETHYL)ETHER UG/L	0.99 U	
SEMI-VOLATILE	BIS(2-ETHYLHEXYL) PHTHALATE UG/L	5.0 U-* J	
SEMI-VOLATILE	BUTYL BENZYL PHTHALATE UG/L	2.0 U	
SEMI-VOLATILE	CHRYSENE UG/L	0.20 U	
SEMI-VOLATILE	DIBENZ(A,H)ANTHRACENE UG/L	0.20 U	
SEMI-VOLATILE	DIBENZOFURAN UG/L	0.99 U	
SEMI-VOLATILE	DIETHYL PHTHALATE UG/L	2.0 U	
SEMI-VOLATILE	DIMETHYL PHTHALATE UG/L	2.0 U	
SEMI-VOLATILE	DI-N-BUTYL PHTHALATE UG/L	5.0 U	
SEMI-VOLATILE	DI-N-OCTYL PHTHALATE UG/L	2.0 UJ	

ANAL_GRP	Chemical	240-38973-31 P2-SW-01 06/26/2014	240-38973-32 TB-01 06/26/2014
SEMI-VOLATILE	FLUORANTHENE UG/L	0.20 U	
SEMI-VOLATILE	FLUORENE UG/L	0.20 U	
SEMI-VOLATILE	HEXACHLOROBENZENE UG/L	0.20 U	
SEMI-VOLATILE	HEXACHLOROBUTADIENE UG/L	0.99 U	
SEMI-VOLATILE	HEXACHLOROCYCLOPENTADIENE UG/L	9.9 U	
SEMI-VOLATILE	HEXACHLOROETHANE UG/L	0.99 U	
SEMI-VOLATILE	INDENO[1,2,3-CD]PYRENE UG/L	0.20 U	
SEMI-VOLATILE	ISOPHORONE UG/L	0.99 U	
SEMI-VOLATILE	NAPHTHALENE UG/L	0.20 U	
SEMI-VOLATILE	NITROBENZENE UG/L	0.99 U	
SEMI-VOLATILE	N-NITROSODI-N-PROPYLAMINE UG/L	0.99 U	
SEMI-VOLATILE	N-NITROSODIPHENYLAMINE UG/L	0.99 U J	
SEMI-VOLATILE	PENTACHLOROPHENOL UG/L	5.0 U	
SEMI-VOLATILE	PHENANTHRENE UG/L	0.20 U	
SEMI-VOLATILE	PHENOL UG/L	0.99 U	
SEMI-VOLATILE	PYRENE UG/L	0.20 U	
VOLATILES	1,1,1-TRICHLOROETHANE UG/L	1.0 U	1.0 U
VOLATILES	1,1,2,2-TETRACHLOROETHANE UG/L	1.0 U	1.0 U
VOLATILES	1,1,2-TRICHLOROETHANE UG/L	1.0 U	1.0 U
VOLATILES	1,1-DICHLOROETHANE UG/L	1.0 U	1.0 U
VOLATILES	1,1-DICHLOROETHENE UG/L	1.0 U	1.0 U
VOLATILES	1,2-DICHLOROETHANE UG/L	1.0 U	1.0 U
VOLATILES	1,2-DICHLOROPROPANE UG/L	1.0 U	1.0 U
VOLATILES	2-BUTANONE (MEK) UG/L	1.9 J	10 U
VOLATILES	2-HEXANONE UG/L	10 U	10 U
VOLATILES	4-METHYL-2-PENTANONE (MIBK) UG/L	10 U	10 U
VOLATILES	ACETONE UG/L	17	10 U
VOLATILES	BENZENE UG/L	1.0 U	1.0 U
VOLATILES	BROMODICHLOROMETHANE UG/L	0.76 J	1.0 U
VOLATILES	BROMOFORM UG/L	1.0 U	1.0 U
VOLATILES	BROMOMETHANE UG/L	1.0 U	1.0 U
VOLATILES	CARBON DISULFIDE UG/L	1.0 U	1.0 U
VOLATILES	CARBON TETRACHLORIDE UG/L	1.0 U	1.0 U
VOLATILES	CHLOROBENZENE UG/L	1.0 U	1.0 U
VOLATILES	CHLOROETHANE UG/L	1.0 U	1.0 U
VOLATILES	CHLOROFORM UG/L	2.5 U	0.38 J
VOLATILES	CHLOROMETHANE UG/L	1.0 U	1.0 U
VOLATILES	CIS-1,2-DICHLOROETHENE UG/L	1.0 U	1.0 U
VOLATILES	CIS-1,3-DICHLOROPROPENE UG/L	1.0 U	1.0 U
VOLATILES	DIBROMOCHLOROMETHANE UG/L	0.58 J	1.0 U
VOLATILES	ETHYLBENZENE UG/L	1.0 U	1.0 U
VOLATILES	METHYL TERT-BUTYL ETHER UG/L	1.0 U	1.0 U
VOLATILES	METHYLENE CHLORIDE UG/L	1.0 U	1.0 U
VOLATILES	N-HEXANE UG/L	1.0 U	1.0 U
VOLATILES	STYRENE UG/L	1.0 U	1.0 U
VOLATILES	TETRACHLOROETHENE UG/L	1.0 U	1.0 U
VOLATILES	TOLUENE UG/L	1.0 U	1.0 U
VOLATILES	TRANS-1,2-DICHLOROETHENE UG/L	1.0 U	1.0 U
VOLATILES	TRANS-1,3-DICHLOROPROPENE UG/L	1.0 U	1.0 U
VOLATILES	TRICHLOROETHENE UG/L	0.20 J	1.0 U
VOLATILES	VINYL CHLORIDE UG/L	1.0 U	1.0 U
VOLATILES	XYLENES, TOTAL UG/L	2.0 U	2.0 U

Canton Drop Forge

Project No. 216406.0000

Waste Characterization Data Summary (Pond 1 Biocell Material)

ANAL_GRP	Chemical	Regulatory Limt[1]	240-44979-1 P1-BC-01 12/3/2014	240-44979-2 P1-BC-02 12/3/2014	240-44979-3 P1-BC-03 12/3/2014	240-45132-1 P1-BC-04 12/5/2014	240-45132-2 P1-BC-05 12/5/2014	240-45132-3 P1-BC-06 12/5/2014	240-45490-1 P1-BC-07 12/15/2014	240-45490-2 P1-BC-08 12/15/2014	240-45490-3 P1-BC-09 12/15/2014	240-44979-1 P1-BC-01 12/3/2014	240-44979-2 P1-BC-02 12/3/2014
GENERAL CHEM	CORROSIVITY BY PH SU	<2 or >12.5	8.91	9.29	8.71	10.3	9.31	11.4	9.19	8.92	9.14	8.91	9.29
GENERAL CHEM	FLASHPOINT DEGREES F	≥ 140 °F	>200	>200	>200	>200	>200	>200	>200	>200	>200	>200	>200
GENERAL CHEM	FREE LIQUID NONE	1000 [2]	CNF	CNF	CNF	CNF	CNF	CNF	CNF	CNF	CNF	CNF	CNF
GENERAL CHEM	HALOGENS, EXTRACTABLE ORGANIC MG/KG	-- [3]	220 U	220 U	220 U	220 U	220 U	220 U	220 U	220 U	220 U	220 U	220 U
METALS (TCLP)	ARSENIC-TCLP MG/L	5	**0.017 J B**	**0.014 J B**	**0.015 J B**	**0.017 J B**	**0.016 J B**	**0.017 J B**	**0.014 J B**	**0.013 J B**	**0.015 J B**	**0.017 J B**	**0.014 J B**
METALS (TCLP)	BARIUM-TCLP MG/L	100	**1.1 J B**	**0.91 J B**	**1.4 J B**	**0.86 J B**	**0.71 J B**	**0.77 J B**	**1 J B**	**0.9 J B**	**1 J B**	**1.1 J B**	**0.91 J B**
METALS (TCLP)	CADMIUM-TCLP MG/L	1	**0.002 J**	**0.0025 J**	**0.0012 J**	**0.0034 J B**	**0.0032 J B**	**0.0037 J B**	**0.0022 J**	**0.0025 J**	**0.0029 J**	**0.002 J**	**0.0025 J**
METALS (TCLP)	CHROMIUM-TCLP MG/L	5	**0.0052 J B**	**0.0086 J B**	**0.0048 J B**	**0.0062 J B**	**0.0048 J B**	**0.0062 J B**	**0.0016 J B**	**0.0035 J B**	**0.0034 J B**	**0.0052 J B**	**0.0086 J B**
METALS (TCLP)	LEAD-TCLP MG/L	5	**0.0097 J B**	**0.0058 J B**	**0.019 J B**	**0.019 J B**	**0.01 J B**	**0.0093 J B**	**0.016 J**	**0.017 J**	**0.019 J**	**0.0097 J B**	**0.0058 J B**
METALS (TCLP)	MERCURY-TCLP MG/L	0.2	0.002 U	0.002 U	0.002 U	0.002 U	0.002 U	0.002 U	0.002 U	0.002 U	0.002 U	0.002 U	0.002 U
METALS (TCLP)	SELENIUM-TCLP MG/L	1	**0.0075 J B**	**0.0067 J B**	**0.0077 J B**	**0.01 J B**	**0.0078 J B**	**0.011 J B**	**0.0052 J**	0.25 U	**0.0041 J**	**0.0075 J B**	**0.0067 J B**
METALS (TCLP)	SILVER-TCLP MG/L	5	0.5 U	0.5 U	0.5 U	0.5 U	0.5 U	0.5 U	0.5 U	0.5 U	0.5 U	0.5 U	0.5 U
SEMI-VOLATILE (TCLP)	1,4-DICHLOROBENZENE-TCLP MG/L	7.5	0.004 U	0.004 U	0.004 U	0.004 U	0.004 U	0.004 U	0.004 U	0.004 U	0.004 U	0.004 U	0.004 U
SEMI-VOLATILE (TCLP)	2,4,5-TRICHLOROPHENOL-TCLP MG/L	400	0.004 U	0.004 U	0.004 U	0.004 U	0.004 U	0.004 U	0.004 U	0.004 U	0.004 U	0.004 U	0.004 U
SEMI-VOLATILE (TCLP)	2,4,6-TRICHLOROPHENOL-TCLP MG/L	2	0.004 U	0.004 U	0.004 U	0.004 U	0.004 U	0.004 U	0.004 U	0.004 U	0.004 U	0.004 U	0.004 U
SEMI-VOLATILE (TCLP)	2,4-DINITROTOLUENE-TCLP MG/L	0.13	0.004 U	0.004 U	0.004 U	0.004 U	0.004 U	0.004 U	0.004 U	0.004 U	0.004 U	0.004 U	0.004 U
SEMI-VOLATILE (TCLP)	2-METHYLPHENOL-TCLP MG/L	200 [4]	0.004 U	0.004 U	0.004 U	0.004 U	0.004 U	0.004 U	0.004 U	0.004 U	0.004 U	0.004 U	0.004 U
SEMI-VOLATILE (TCLP)	**3 & 4 METHYLPHENOL-TCLP MG/L**	200 [4]	**0.0012 J**	**0.0025 J**	0.004 U	0.004 U	**0.0022 J**	**0.0012 J**	**0.0034 J**	**0.006**	**0.0053**	**0.0012 J**	**0.0025 J**
SEMI-VOLATILE (TCLP)	HEXACHLOROBENZENE-TCLP MG/L	0.13	0.0008 U	0.0008 U	0.0008 U	0.0008 U	0.0008 U	0.0008 U	0.0008 U	0.0008 U	0.0008 U	0.0008 U	0.0008 U
SEMI-VOLATILE (TCLP)	HEXACHLOROBUTADIENE-TCLP MG/L	0.5	0.004 U	0.004 U	0.004 U	0.004 U	0.004 U	0.004 U	0.004 U	0.004 U	0.004 U	0.004 U	0.004 U
SEMI-VOLATILE (TCLP)	HEXACHLOROETHANE-TCLP MG/L	3	0.004 U	0.004 U	0.004 U	0.004 U	0.004 U	0.004 U	0.004 U	0.004 U	0.004 U	0.004 U	0.004 U
SEMI-VOLATILE (TCLP)	NITROBENZENE-TCLP MG/L	2	0.004 U	0.004 U	0.004 U	0.004 U	0.004 U	0.004 U	0.004 U	0.004 U	0.004 U	0.004 U	0.004 U
SEMI-VOLATILE (TCLP)	PENTACHLOROPHENOL-TCLP MG/L	100	0.004 U	0.004 U	0.004 U	0.004 U	0.004 U	0.004 U	0.004 U	0.004 U	0.004 U	0.004 U	0.004 U
SEMI-VOLATILE (TCLP)	PYRIDINE-TCLP MG/L	5	0.004 U	0.004 U	0.004 U	0.004 U	0.004 U	0.004 U	0.004 U	0.004 U	0.004 U	0.004 U	0.004 U
VOLATILES (TCLP)	1,1-DICHLOROETHENE-TCLP MG/L	0.7	0.025 U	0.025 U	0.025 U	0.025 U	0.025 U	0.025 U	0.025 U	0.025 U	0.025 U	0.025 U	0.025 U
VOLATILES (TCLP)	1,2-DICHLOROETHANE-TCLP MG/L	0.5	0.025 U	0.025 U	0.025 U	0.025 U	0.025 U	0.025 U	0.025 U	0.025 U	0.025 U	0.025 U	0.025 U
VOLATILES (TCLP)	**2-BUTANONE (MEK)-TCLP MG/L**	200	0.25 U	**0.029 J**	**0.04 J**	**0.056 J**	**0.034 J**	**0.038 J**	0.25 U	0.25 U	0.25 U	0.25 U	**0.029 J**
VOLATILES (TCLP)	BENZENE-TCLP MG/L	0.5	0.025 U	0.025 U	0.025 U	0.025 U	0.025 U	0.025 U	0.025 U	0.025 U	0.025 U	0.025 U	0.025 U
VOLATILES (TCLP)	CARBON TETRACHLORIDE-TCLP MG/L	0.5	0.025 U	0.025 U	0.025 U	0.025 U	0.025 U	0.025 U	0.025 U	0.025 U	0.025 U	0.025 U	0.025 U
VOLATILES (TCLP)	CHLOROBENZENE-TCLP MG/L	100	0.025 U	0.025 U	0.025 U	0.025 U	0.025 U	0.025 U	0.025 U	0.025 U	0.025 U	0.025 U	0.025 U
VOLATILES (TCLP)	CHLOROFORM-TCLP MG/L	6	0.025 U	0.025 U	0.025 U	0.025 U	0.025 U	0.025 U	0.025 U	0.025 U	0.025 U	0.025 U	0.025 U
VOLATILES (TCLP)	TETRACHLOROETHENE-TCLP MG/L	0.7	0.025 U	0.025 U	0.025 U	0.025 U	0.025 U	0.025 U	0.025 U	0.025 U	0.025 U	0.025 U	0.025 U
VOLATILES (TCLP)	TRICHLOROETHENE-TCLP MG/L	0.5	0.025 U	0.025 U	0.025 U	0.025 U	0.025 U	0.025 U	0.025 U	0.025 U	0.025 U	0.025 U	0.025 U
VOLATILES (TCLP)	VINYL CHLORIDE-TCLP MG/L	0.2	0.025 U	0.025 U	0.025 U	0.025 U	0.025 U	0.025 U	0.025 U	0.025 U	0.025 U	0.025 U	0.025 U

Bold = detected concentration

CNF = Contains no free liquids

J = Estimated due to data quality issue (e.g., positive concentration detected below the laboratory reporting limit)

U = Nondetect at the reported value

[1] As presented in 40 CFR Part 261 Subpart C.

[2] According to EPA's Rebuttable Presumption Rule (40 CFR §261.3(a)(2)(v)) any used oil containing 1000 ppm of total halogens is assumed to have been mixed with hazardous waste and consequently the entire used oil/waste mixture constitutes hazardous waste. However, the rule also allows generators to rebut the presumption through further demonstrations.

[3] A specified amount of material is placed in a paint filter. If any portion of the material passes through and drops from the filter within the 5 minute test period, the material is deemed to contain free liquids. Waste containing free liquids may be placed in a landfill if the landfill has a liner and leachate collection and removal system that meet the requirements of § 264.301(a) or the liquid waste or waste containing free liquids is treated or stabilized, chemically or physically (e.g., by mixing with a sorbent solid), so that free liquids are no longer present.

[4] If o-, m-, and p-Cresol concentrations cannot be differentiated, the total cresol (D026) concentration is used. The regulatory level of total cresol is 200 mg/l.

Canton Drop Forge

Project No. 216406.0000

Waste Characterization Data Summary (Pond 1 Biocell Material)

ANAL_GRP	Chemical	240-44979-3 P1-BC-03 12/3/2014	240-45132-1 P1-BC-04 12/5/2014	240-45132-2 P1-BC-05 12/5/2014	240-45132-3 P1-BC-06 12/5/2014	240-45490-1 P1-BC-07 12/15/2014	240-45490-2 P1-BC-08 12/15/2014	240-45490-3 P1-BC-09 12/15/2014	240-45757-1 P1-BC-10 12/19/2014	240-45757-2 P1-BC-11 12/19/2014	240-45757-3 P1-BC-12 12/19/2014
GENERAL CHEM	CORROSIVITY BY PH SU	8.71	10.3	9.31	11.4	9.19	8.92	9.14	9.27	8.83	8.67
GENERAL CHEM	FLASHPOINT DEGREES F	>200	>200	>200	>200	>200	>200	>200	>200	>200	>200
GENERAL CHEM	FREE LIQUID NONE	CNF	CNF	CNF	CNF	CNF	CNF	CNF	CNF	CNF	CNF
GENERAL CHEM	HALOGENS, EXTRACTABLE ORGANIC MG/KG	220 U	220 U	220 U	220 U	220 U	220 U	220 U	230 U	220 U	210 U
METALS (TCLP)	ARSENIC-TCLP MG/L	**0.015 J B**	**0.017 J B**	**0.016 J B**	**0.017 J B**	**0.014 J B**	**0.013 J B**	0.015 J B	0.020 J B	0.019 J B	0.015 J B
METALS (TCLP)	BARIUM-TCLP MG/L	**1.4 J B**	**0.86 J B**	**0.71 J B**	**0.77 J B**	**1 J B**	**0.9 J B**	1 J B	0.96 J B	1.2 J B	1.2 J B
METALS (TCLP)	CADMIUM-TCLP MG/L	**0.0012 J**	**0.0034 J B**	**0.0032 J B**	**0.0037 J B**	**0.0022 J**	**0.0025 J**	0.0029 J	0.0019 J	0.0035 J	0.0020 J
METALS (TCLP)	CHROMIUM-TCLP MG/L	**0.0048 J B**	**0.0062 J B**	**0.0048 J B**	**0.0062 J B**	**0.0016 J B**	**0.0035 J B**	0.0034 J B	0.0044 J B	0.0051 J B	0.0033 J B
METALS (TCLP)	LEAD-TCLP MG/L	**0.019 J B**	**0.019 J B**	**0.01 J B**	**0.0093 J B**	**0.016 J**	**0.017 J**	0.019 J	0.014 J	0.015 J	0.085 J
METALS (TCLP)	MERCURY-TCLP MG/L	0.002 U	0.002 U	0.002 U	0.002 U	0.002 U	0.002 U	0.002 U	0.0020 U	0.0020 U	0.0020 U
METALS (TCLP)	SELENIUM-TCLP MG/L	**0.0077 J B**	**0.01 J B**	**0.0078 J B**	**0.011 J B**	**0.0052 J**	0.25 U	0.0041 J	0.25 U	0.25 U	0.25 U
METALS (TCLP)	SILVER-TCLP MG/L	0.5 U	0.5 U	0.5 U	0.5 U	0.5 U	0.5 U	0.5 U	0.50 U	0.50 U	0.50 U
SEMI-VOLATILE (TCLP)	1,4-DICHLOROBENZENE-TCLP MG/L	0.004 U	0.004 U	0.004 U	0.004 U	0.004 U	0.004 U	0.004 U	0.0040 U	0.0040 U	0.0040 U
SEMI-VOLATILE (TCLP)	2,4,5-TRICHLOROPHENOL-TCLP MG/L	0.004 U	0.004 U	0.004 U	0.004 U	0.004 U	0.004 U	0.004 U	0.0040 U	0.0040 U	0.0040 U
SEMI-VOLATILE (TCLP)	2,4,6-TRICHLOROPHENOL-TCLP MG/L	0.004 U	0.004 U	0.004 U	0.004 U	0.004 U	0.004 U	0.004 U	0.0040 U	0.0040 U	0.0040 U
SEMI-VOLATILE (TCLP)	2,4-DINITROTOLUENE-TCLP MG/L	0.004 U	0.004 U	0.004 U	0.004 U	0.004 U	0.004 U	0.004 U	0.0040 U	0.0040 U	0.0040 U
SEMI-VOLATILE (TCLP)	2-METHYLPHENOL-TCLP MG/L	0.004 U	0.004 U	0.004 U	0.004 U	0.004 U	0.004 U	0.004 U	0.0040 U	0.0040 U	0.0040 U
SEMI-VOLATILE (TCLP)	**3 & 4 METHYLPHENOL-TCLP MG/L**	0.004 U	0.004 U	**0.0022 J**	**0.0012 J**	**0.0034 J**	**0.006**	**0.0053**	**0.0029 J**	**0.0022 J**	0.0040 U
SEMI-VOLATILE (TCLP)	HEXACHLOROBENZENE-TCLP MG/L	0.0008 U	0.0008 U	0.0008 U	0.0008 U	0.0008 U	0.0008 U	0.0008 U	0.00080 U	0.00080 U	0.00080 U
SEMI-VOLATILE (TCLP)	HEXACHLOROBUTADIENE-TCLP MG/L	0.004 U	0.004 U	0.004 U	0.004 U	0.004 U	0.004 U	0.004 U	0.0040 U	0.0040 U	0.0040 U
SEMI-VOLATILE (TCLP)	HEXACHLOROETHANE-TCLP MG/L	0.004 U	0.004 U	0.004 U	0.004 U	0.004 U	0.004 U	0.004 U	0.0040 U	0.0040 U	0.0040 U
SEMI-VOLATILE (TCLP)	NITROBENZENE-TCLP MG/L	0.004 U	0.004 U	0.004 U	0.004 U	0.004 U	0.004 U	0.004 U	0.0040 U	0.0040 U	0.0040 U
SEMI-VOLATILE (TCLP)	PENTACHLOROPHENOL-TCLP MG/L	0.004 U	0.004 U	0.004 U	0.004 U	0.004 U	0.004 U	0.004 U	0.0040 U	0.0040 U	0.0040 U
SEMI-VOLATILE (TCLP)	PYRIDINE-TCLP MG/L	0.004 U	0.004 U	0.004 U	0.004 U	0.004 U	0.004 U	0.004 U	0.0040 U	0.0040 U	0.0040 U
VOLATILES (TCLP)	1,1-DICHLOROETHENE-TCLP MG/L	0.025 U	0.025 U	0.025 U	0.025 U	0.025 U	0.025 U	0.025 U	0.025 U	0.025 U	0.025 U
VOLATILES (TCLP)	1,2-DICHLOROETHANE-TCLP MG/L	0.025 U	0.025 U	0.025 U	0.025 U	0.025 U	0.025 U	0.025 U	0.025 U	0.025 U	0.025 U
VOLATILES (TCLP)	**2-BUTANONE (MEK)-TCLP MG/L**	**0.04 J**	**0.056 J**	**0.034 J**	**0.038 J**	0.25 U	0.25 U	0.25 U	0.25 U	0.25 U	0.25 U
VOLATILES (TCLP)	BENZENE-TCLP MG/L	0.025 U	0.025 U	0.025 U	0.025 U	0.025 U	0.025 U	0.025 U	0.025 U	0.025 U	0.025 U
VOLATILES (TCLP)	CARBON TETRACHLORIDE-TCLP MG/L	0.025 U	0.025 U	0.025 U	0.025 U	0.025 U	0.025 U	0.025 U	0.025 U	0.025 U	0.025 U
VOLATILES (TCLP)	CHLOROBENZENE-TCLP MG/L	0.025 U	0.025 U	0.025 U	0.025 U	0.025 U	0.025 U	0.025 U	0.025 U	0.025 U	0.025 U
VOLATILES (TCLP)	CHLOROFORM-TCLP MG/L	0.025 U	0.025 U	0.025 U	0.025 U	0.025 U	0.025 U	0.025 U	0.025 U	0.025 U	0.025 U
VOLATILES (TCLP)	TETRACHLOROETHENE-TCLP MG/L	0.025 U	0.025 U	0.025 U	0.025 U	0.025 U	0.025 U	0.025 U	0.025 U	0.025 U	0.025 U
VOLATILES (TCLP)	TRICHLOROETHENE-TCLP MG/L	0.025 U	0.025 U	0.025 U	0.025 U	0.025 U	0.025 U	0.025 U	0.025 U	0.025 U	0.025 U
VOLATILES (TCLP)	VINYL CHLORIDE-TCLP MG/L	0.025 U	0.025 U	0.025 U	0.025 U	0.025 U	0.025 U	0.025 U	0.025 U	0.025 U	0.025 U

Bold = detected concentration

CNF = Contains no free liquids

J = Estimated due to data quality issue (e.g., positiv

U = Nondetect at the reported value

[1] As presented in 40 CFR Part 261 Subpart C.

[2] According to EPA's Rebuttable Presumption Rule (40 CFR §261.3(a)(2)(v)) any waste. However, the rule also allows generators to rebut the presumption thro

[3] A specified amount of material is placed in a paint filter. If any portion of the landfill if the landfill has a liner and leachate collection and removal system that that free liquids are no longer present.

[4] If o-, m-, and p-Cresol concentrations cannot be differentiated, the total creso

2

ATTACHMENT 2

WASTE REMOVAL DISPOSAL DOCUMENTATION

Detail Customer Activity Report

All Ticket Types | December 01, 2014 to December 16, 2014 | All Facilities

History and Waiting | Specific Customer: 333341

333341- CANTON DROP FORGE

Ticket Date	Facility & Ticket			Contract	Truck #	Container	Material	Billing Quantity	
12/08/2014	I	01	1014430	36841420467	J53		SW-CONT SOIL	14.88	TN
12/08/2014	I	01	1014437	36841420467	J55		SW-CONT SOIL	16.38	TN
12/08/2014	I	01	1014453	36841420467	J55		SW-CONT SOIL	22.36	TN
12/08/2014	I	01	1014454	36841420467	J53		SW-CONT SOIL	20.56	TN
12/08/2014	I	01	1014478	36841420467	J55		SW-CONT SOIL	22.96	TN
12/08/2014	I	01	1014481	36841420467	J53		SW-CONT SOIL	19.84	TN
12/08/2014	I	01	1014523	36841420467	J55		SW-CONT SOIL	19.14	TN
12/08/2014	I	01	1014539	36841420467	J53		SW-CONT SOIL	17.35	TN
12/08/2014	I	01	1014559	36841420467	J55		SW-CONT SOIL	18.35	TN
12/08/2014	I	01	1014582	36841420467	J53		SW-CONT SOIL	18.78	TN
12/08/2014	I	01	1014600	36841420467	J55		SW-CONT SOIL	20.40	TN
12/09/2014	I	01	1014661	36841420467	J53		SW-CONT SOIL	16.44	TN
12/09/2014	I	01	1014662	36841420467	J55		SW-CONT SOIL	15.82	TN
12/09/2014	I	01	1014687	36841420467	J61		SW-CONT SOIL	14.53	TN
12/09/2014	I	01	1014695	36841420467	J55		SW-CONT SOIL	17.48	TN
12/09/2014	I	01	1014709	36841420467	J61		SW-CONT SOIL	15.01	TN
12/09/2014	I	01	1014712	36841420467	J53		SW-CONT SOIL	17.48	TN
12/11/2014	I	01	1015111	36841420467	J87		SW-CONT SOIL	15.53	TN
12/11/2014	I	01	1015136	36841420467	J87		SW-CONT SOIL	17.42	TN
12/11/2014	I	01	1015151	36841420467	J87		SW-CONT SOIL	18.53	TN
12/11/2014	I	01	1015164	36841420467	J87		SW-CONT SOIL	14.96	TN
12/11/2014	I	01	1015221	36841420467	J87		SW-CONT SOIL	18.94	TN
12/11/2014	I	01	1015246	36841420467	J87		SW-CONT SOIL	18.09	TN
12/15/2014	I	01	1015529	36841420467	J87		SW-CONT SOIL	17.43	TN
12/15/2014	I	01	1015530	36841420467	J55		SW-CONT SOIL	18.95	TN
12/15/2014	I	01	1015536	36841420467	J54		SW-CONT SOIL	15.15	TN
12/15/2014	I	01	1015546	36841420467	J53		SW-CONT SOIL	18.16	TN
12/15/2014	I	01	1015549	36841420467	J87		SW-CONT SOIL	19.75	TN
12/15/2014	I	01	1015551	36841420467	J55		SW-CONT SOIL	18.42	TN
12/15/2014	I	01	1015575	36841420467	J53		SW-CONT SOIL	20.38	TN
12/15/2014	I	01	1015577	36841420467	J87		SW-CONT SOIL	17.13	TN
12/15/2014	I	01	1015580	36841420467	J55		SW-CONT SOIL	20.19	TN
12/15/2014	I	01	1015611	36841420467	J87		SW-CONT SOIL	20.11	TN
12/15/2014	I	01	1015612	36841420467	J53		SW-CONT SOIL	17.97	TN
12/15/2014	I	01	1015613	36841420467	J55		SW-CONT SOIL	19.26	TN
12/15/2014	I	01	1015643	36841420467	J87		SW-CONT SOIL	19.42	TN
12/15/2014	I	01	1015648	36841420467	J55		SW-CONT SOIL	18.20	TN
12/15/2014	I	01	1015672	36841420467	J54		SW-CONT SOIL	15.25	TN
12/15/2014	I	01	1015684	36841420467	J87		SW-CONT SOIL	19.09	TN
12/15/2014	I	01	1015690	36841420467	J55		SW-CONT SOIL	17.22	TN

Detail Customer Activity Report

All Ticket Types | December 01, 2014 to December 16, 2014 | All Facilities

History and Waiting | Specific Customer: 333341

333341- CANTON DROP FORGE

Ticket Date	Facility & Ticket		Contract	Truck #	Container	Material	Billing Quantity	
12/15/2014	I	01	1015716 36841420467	J54		SW-CONT SOIL	16.48	TN
12/15/2014	I	01	1015724 36841420467	J87		SW-CONT SOIL	18.94	TN
12/16/2014	I	01	1015751 36841420467	J53		SW-CONT SOIL	19.40	TN
12/16/2014	I	01	1015766 36841420467	J55		SW-CONT SOIL	17.60	TN
12/16/2014	I	01	1015774 36841420467	J87		SW-CONT SOIL	16.60	TN
12/16/2014	I	01	1015775 36841420467	J54		SW-CONT SOIL	18.22	TN
12/16/2014	I	01	1015780 36841420467	J61		SW-CONT SOIL	14.83	TN
12/16/2014	I	01	1015788 36841420467	J53		SW-CONT SOIL	20.20	TN
12/16/2014	I	01	1015797 36841420467	J55		SW-CONT SOIL	18.60	TN
12/16/2014	I	01	1015799 36841420467	J87		SW-CONT SOIL	17.31	TN
12/16/2014	I	01	1015801 36841420467	J61		SW-CONT SOIL	15.25	TN
12/16/2014	I	01	1015808 36841420467	J54		SW-CONT SOIL	18.79	TN
12/16/2014	I	01	1015810 36841420467	J53		SW-CONT SOIL	19.96	TN
12/16/2014	I	01	1015831 36841420467	J55		SW-CONT SOIL	19.80	TN
12/16/2014	I	01	1015833 36841420467	J87		SW-CONT SOIL	19.42	TN
12/16/2014	I	01	1015834 36841420467	J61		SW-CONT SOIL	14.27	TN
12/16/2014	I	01	1015840 36841420467	J54		SW-CONT SOIL	17.81	TN
12/16/2014	I	01	1015845 36841420467	J53		SW-CONT SOIL	19.41	TN
12/16/2014	I	01	1015862 36841420467	J61		SW-CONT SOIL	13.13	TN
12/16/2014	I	01	1015876 36841420467	J54		SW-CONT SOIL	15.89	TN
12/16/2014	I	01	1015877 36841420467	J87		SW-CONT SOIL	19.38	TN
12/16/2014	I	01	1015878 36841420467	J55		SW-CONT SOIL	16.48	TN
12/16/2014	I	01	1015879 36841420467	J53		SW-CONT SOIL	21.32	TN
12/16/2014	I	01	1015907 36841420467	J54		SW-CONT SOIL	16.75	TN
12/16/2014	I	01	1015911 36841420467	J61		SW-CONT SOIL	17.82	TN
12/16/2014	I	01	1015918 36841420467	J55		SW-CONT SOIL	20.80	TN
12/16/2014	I	01	1015920 36841420467	J53		SW-CONT SOIL	20.17	TN
12/16/2014	I	01	1015956 36841420467	J61		SW-CONT SOIL	18.31	TN
12/16/2014	I	01	1015958 36841420467	J54		SW-CONT SOIL	17.01	TN
12/16/2014	I	01	1015967 36841420467	J53		SW-CONT SOIL	16.26	TN
12/16/2014	I	01	1015969 36841420467	J55		SW-CONT SOIL	21.09	TN

Material Summary	Weight Inbound	Weight Outbound	Volume Inbound	Volume Outbound		Count Inbound	Count Outbound	Billing Quantity	
VG - SW-CONT SOIL	1,280.61	0.00 TN	0.00	0.00	Y	0.00	0.00	1,280.61	TN

Activity by Customer and Material (with Weight In/Out)

Date Range: 12/17/2014 to 12/17/2014

Customer Range: 333341 to 333341

Details

	Date	Ticket #		Inbound Weight (Tons)	Inbound Volume	UOM	Outbound Weight (Tons)	Outbound Volume	UOM	Count Inboun	Count Outbound	Billing Qty	UOM
Cust # - Name: 333341 - CANTON DROP FORGE													
	12/17/2014	1016011	01	19.19	0.00		0.00	0.00				19.19	
	12/17/2014	1016012	01	16.85	0.00		0.00	0.00				16.85	
	12/17/2014	1016015	01	21.68	0.00		0.00	0.00				21.68	
	12/17/2014	1016026	01	16.49	0.00		0.00	0.00				16.49	
	12/17/2014	1016035	01	20.23	0.00		0.00	0.00				20.23	
	12/17/2014	1016039	01	17.99	0.00		0.00	0.00				17.99	
	12/17/2014	1016041	01	22.84	0.00		0.00	0.00				22.84	
	12/17/2014	1016057	01	17.54	0.00		0.00	0.00				17.54	
	12/17/2014	1016062	01	21.27	0.00		0.00	0.00				21.27	
	12/17/2014	1016064	01	18.85	0.00		0.00	0.00				18.85	
	12/17/2014	1016066	01	18.11	0.00		0.00	0.00				18.11	
	12/17/2014	1016070	01	20.42	0.00		0.00	0.00				20.42	
	12/17/2014	1016088	01	16.83	0.00		0.00	0.00				16.83	
	12/17/2014	1016089	01	15.63	0.00		0.00	0.00				15.63	
	12/17/2014	1016092	01	17.36	0.00		0.00	0.00				17.36	
	12/17/2014	1016093	01	17.94	0.00		0.00	0.00				17.94	
	12/17/2014	1016120	01	20.17	0.00		0.00	0.00				20.17	
	12/17/2014	1016121	01	20.78	0.00		0.00	0.00				20.78	
	12/17/2014	1016140	01	18.60	0.00		0.00	0.00				18.60	
	12/17/2014	1016141	01	19.87	0.00		0.00	0.00				19.87	
	12/17/2014	1016142	01	19.01	0.00		0.00	0.00				19.01	
	12/17/2014	1016143	01	17.51	0.00		0.00	0.00				17.51	
	12/17/2014	1016178	01	21.15	0.00		0.00	0.00				21.15	
	12/17/2014	1016181	01	20.46	0.00		0.00	0.00				20.46	
	12/17/2014	1016186	01	18.43	0.00		0.00	0.00				18.43	
	12/17/2014	1016195	01	16.56	0.00		0.00	0.00				16.56	
	12/17/2014	1016197	01	21.18	0.00		0.00	0.00				21.18	
	12/17/2014	1016198	01	20.10	0.00		0.00	0.00				20.10	
	12/17/2014	1016220	01	19.69	0.00		0.00	0.00				19.69	
	12/17/2014	1016222	01	18.65	0.00		0.00	0.00				18.65	
	12/17/2014	1016224	01	17.00	0.00		0.00	0.00				17.00	
VG - SW-CONT SOIL				588.38	0.00	YD	0.00	0.00				588.38	TN
	Totals:			**588.38**	**0.00**		**0.00**	**0.00**				**588.38**	
	Grand Totals:			**588.38**	**0.00**		**0.00**	**0.00**				**588.38**	

Activity by Customer and Material (with Weight In/Out)

Date Range: 12/18/2014 to 12/18/2014

Customer Range: 333341 to 333341

Details

	Date	Ticket #		Inbound Weight (Tons)	Inbound Volume	UOM	Outbound Weight (Tons)	Outbound Volume	UOM	Count Inboun	Count Outbound	Billing Qty
Cust # - Name: 333341 - CANTON DROP FORGE												
	12/18/2014	1016254	01	16.21	0.00		0.00	0.00				16.21
	12/18/2014	1016255	01	18.82	0.00		0.00	0.00				18.82
	12/18/2014	1016260	01	21.12	0.00		0.00	0.00				21.12
	12/18/2014	1016262	01	20.34	0.00		0.00	0.00				20.34
	12/18/2014	1016276	01	21.43	0.00		0.00	0.00				21.43
	12/18/2014	1016277	01	21.61	0.00		0.00	0.00				21.61
	12/18/2014	1016283	01	20.75	0.00		0.00	0.00				20.75
	12/18/2014	1016289	01	22.31	0.00		0.00	0.00				22.31
	12/18/2014	1016296	01	17.46	0.00		0.00	0.00				17.46
	12/18/2014	1016301	01	17.61	0.00		0.00	0.00				17.61
	12/18/2014	1016303	01	15.49	0.00		0.00	0.00				15.49
	12/18/2014	1016311	01	19.45	0.00		0.00	0.00				19.45
	12/18/2014	1016328	01	17.80	0.00		0.00	0.00				17.80
	12/18/2014	1016342	01	20.10	0.00		0.00	0.00				20.10
	12/18/2014	1016344	01	19.33	0.00		0.00	0.00				19.33
	12/18/2014	1016351	01	17.24	0.00		0.00	0.00				17.24
	12/18/2014	1016354	01	18.83	0.00		0.00	0.00				18.83
	12/18/2014	1016373	01	21.79	0.00		0.00	0.00				21.79
	12/18/2014	1016379	01	19.46	0.00		0.00	0.00				19.46
	12/18/2014	1016392	01	16.29	0.00		0.00	0.00				16.29
	12/18/2014	1016397	01	18.12	0.00		0.00	0.00				18.12
	12/18/2014	1016420	01	19.10	0.00		0.00	0.00				19.10
	12/18/2014	1016424	01	20.58	0.00		0.00	0.00				20.58
	12/18/2014	1016429	01	15.42	0.00		0.00	0.00				15.42
	12/18/2014	1016433	01	20.18	0.00		0.00	0.00				20.18
	12/18/2014	1016449	01	16.95	0.00		0.00	0.00				16.95
	12/18/2014	1016450	01	19.14	0.00		0.00	0.00				19.14
	12/18/2014	1016451	01	16.61	0.00		0.00	0.00				16.61
VG - SW-CONT SOIL				529.54	0.00	YD	0.00	0.00	YD			529.54
	Totals:			**529.54**	**0.00**		**0.00**	**0.00**				**529.54**
	Grand Totals:			**529.54**	**0.00**		**0.00**	**0.00**				**529.54**
												529.54

Activity by Customer and Material (with Weight In/Out)

Date Range: 12/19/2014 to 12/19/2014

Customer Range: 333341 to 333341

Details

	Date	Ticket #		Inbound Weight (Tons)	Inbound Volume	UOM	Outbound Weight (Tons)	Outbound Volume	UOM	Count Inboun	Count Outbound	Billing Qty	UOM
Cust # - Name: 333341 - CANTON DROP FORGE													
	12/19/2014	1016478	01	18.39	0.00		0.00	0.00				18.39	
	12/19/2014	1016479	01	19.10	0.00		0.00	0.00				19.10	
	12/19/2014	1016480	01	20.04	0.00		0.00	0.00				20.04	
	12/19/2014	1016483	01	18.69	0.00		0.00	0.00				18.69	
	12/19/2014	1016484	01	17.59	0.00		0.00	0.00				17.59	
	12/19/2014	1016504	01	21.16	0.00		0.00	0.00				21.16	
	12/19/2014	1016505	01	18.97	0.00		0.00	0.00				18.97	
	12/19/2014	1016506	01	20.16	0.00		0.00	0.00				20.16	
	12/19/2014	1016507	01	16.00	0.00		0.00	0.00				16.00	
	12/19/2014	1016509	01	14.55	0.00		0.00	0.00				14.55	
	12/19/2014	1016522	01	20.12	0.00		0.00	0.00				20.12	
	12/19/2014	1016524	01	19.58	0.00		0.00	0.00				19.58	
	12/19/2014	1016525	01	19.08	0.00		0.00	0.00				19.08	
	12/19/2014	1016529	01	15.35	0.00		0.00	0.00				15.35	
	12/19/2014	1016531	01	15.81	0.00		0.00	0.00				15.81	
	12/19/2014	1016549	01	20.83	0.00		0.00	0.00				20.83	
	12/19/2014	1016550	01	20.46	0.00		0.00	0.00				20.46	
	12/19/2014	1016563	01	16.88	0.00		0.00	0.00				16.88	
	12/19/2014	1016568	01	18.81	0.00		0.00	0.00				18.81	
	12/19/2014	1016572	01	20.34	0.00		0.00	0.00				20.34	
	12/19/2014	1016577	01	16.40	0.00		0.00	0.00				16.40	
	12/19/2014	1016588	01	16.96	0.00		0.00	0.00				16.96	
	12/19/2014	1016598	01	16.00	0.00		0.00	0.00				16.00	
	12/19/2014	1016601	01	14.39	0.00		0.00	0.00				14.39	
	12/19/2014	1016607	01	22.44	0.00		0.00	0.00				22.44	
	12/19/2014	1016630	01	22.28	0.00		0.00	0.00				22.28	
	12/19/2014	1016632	01	18.42	0.00		0.00	0.00				18.42	
	12/19/2014	1016635	01	19.07	0.00		0.00	0.00				19.07	
	12/19/2014	1016638	01	19.61	0.00		0.00	0.00				19.61	
	12/19/2014	1016643	01	21.23	0.00		0.00	0.00				21.23	
	12/19/2014	1016657	01	20.41	0.00		0.00	0.00				20.41	
	12/19/2014	1016658	01	16.85	0.00		0.00	0.00				16.85	
VG - SW-CONT SOIL				595.97	0.00	YD	0.00	0.00	YD	0.00	0.00	595.97	TN
	Totals:			**595.97**	**0.00**		**0.00**	**0.00**		**0.00**	**0.00**	**595.97**	
	Grand Totals:			**595.97**	**0.00**		**0.00**	**0.00**		**0.00**	**0.00**	**595.97**	
												595.97	TN

Activity by Customer and Material (with Weight In/Out)

Date Range: 12/22/2014 to 12/22/2014

Customer Range: 333341 to 333341

Details

	Date	Ticket #		Inbound Weight (Tons)	Inbound Volume	UOM	Outbound Weight (Tons)	Outbound Volume	UOM	Count	Billing Qty	UOM
Cust # - Name: 333341 - CANTON DROP FORGE												
	12/22/2014	1016713	01	16.11	0.00		0.00	0.00			16.11	
	12/22/2014	1016719	01	17.24	0.00		0.00	0.00			17.24	
	12/22/2014	1016730	01	18.96	0.00		0.00	0.00			18.96	
	12/22/2014	1016731	01	16.91	0.00		0.00	0.00			16.91	
	12/22/2014	1016739	01	18.79	0.00		0.00	0.00			18.79	
	12/22/2014	1016744	01	20.35	0.00		0.00	0.00			20.35	
	12/22/2014	1016756	01	19.29	0.00		0.00	0.00			19.29	
	12/22/2014	1016757	01	18.11	0.00		0.00	0.00			18.11	
	12/22/2014	1016760	01	18.93	0.00		0.00	0.00			18.93	
	12/22/2014	1016764	01	14.42	0.00		0.00	0.00			14.42	
	12/22/2014	1016769	01	21.05	0.00		0.00	0.00			21.05	
	12/22/2014	1016787	01	19.61	0.00		0.00	0.00			19.61	
	12/22/2014	1016792	01	17.66	0.00		0.00	0.00			17.66	
	12/22/2014	1016793	01	14.01	0.00		0.00	0.00			14.01	
	12/22/2014	1016795	01	16.67	0.00		0.00	0.00			16.67	
	12/22/2014	1016813	01	14.89	0.00		0.00	0.00			14.89	
	12/22/2014	1016826	01	17.68	0.00		0.00	0.00			17.68	
	12/22/2014	1016828	01	19.31	0.00		0.00	0.00			19.31	
	12/22/2014	1016832	01	20.01	0.00		0.00	0.00			20.01	
	12/22/2014	1016850	01	13.49	0.00		0.00	0.00			13.49	
	12/22/2014	1016852	01	13.86	0.00		0.00	0.00			13.86	
	12/22/2014	1016875	01	16.20	0.00		0.00	0.00			16.20	
	12/22/2014	1016877	01	14.52	0.00		0.00	0.00			14.52	
	12/22/2014	1016882	01	13.58	0.00		0.00	0.00			13.58	
	12/22/2014	1016888	01	19.13	0.00		0.00	0.00			19.13	
	12/22/2014	1016894	01	16.00	0.00		0.00	0.00			16.00	
	12/22/2014	1016912	01	18.25	0.00		0.00	0.00			18.25	
	12/22/2014	1016913	01	16.97	0.00		0.00	0.00			16.97	
	12/22/2014	1016915	01	15.49	0.00		0.00	0.00			15.49	
	12/22/2014	1016917	01	18.14	0.00		0.00	0.00			18.14	
VG - SW-CONT SOIL				515.63	0.00	YD	0.00	0.00	YD		515.63	TN
	Totals:			**515.63**	**0.00**		**0.00**	**0.00**			**515.63**	
	Grand Totals:			**515.63**	**0.00**		**0.00**	**0.00**			**515.63**	
											515.63	TN

Activity by Customer and Material (with Weight In/Out)

Date Range: 12/23/2014 to 12/23/2014

Customer Range: 333341 to 333341

Details

	Date	Ticket #		Inbound Weight (Tons)	Inbound Volume	UOM	Outbound Weight (Tons)	Outbound Volume	UOM	Count Inboun	Count Outbound	Billing Qty	UOM
Cust # - Name: 333341 - CANTON DROP FORGE													
	12/23/2014	1016944	01	14.06	0.00		0.00	0.00				14.06	
	12/23/2014	1016948	01	18.18	0.00		0.00	0.00				18.18	
	12/23/2014	1016949	01	18.80	0.00		0.00	0.00				18.80	
	12/23/2014	1016953	01	18.79	0.00		0.00	0.00				18.79	
	12/23/2014	1016954	01	18.23	0.00		0.00	0.00				18.23	
	12/23/2014	1016967	01	16.80	0.00		0.00	0.00				16.80	
	12/23/2014	1016970	01	17.01	0.00		0.00	0.00				17.01	
	12/23/2014	1016971	01	18.74	0.00		0.00	0.00				18.74	
	12/23/2014	1016975	01	18.36	0.00		0.00	0.00				18.36	
	12/23/2014	1016981	01	17.85	0.00		0.00	0.00				17.85	
	12/23/2014	1016986	01	16.10	0.00		0.00	0.00				16.10	
	12/23/2014	1016988	01	19.32	0.00		0.00	0.00				19.32	
	12/23/2014	1016992	01	18.25	0.00		0.00	0.00				18.25	
	12/23/2014	1016995	01	18.35	0.00		0.00	0.00				18.35	
	12/23/2014	1017007	01	17.39	0.00		0.00	0.00				17.39	
	12/23/2014	1017008	01	15.67	0.00		0.00	0.00				15.67	
	12/23/2014	1017026	01	16.71	0.00		0.00	0.00				16.71	
	12/23/2014	1017028	01	18.27	0.00		0.00	0.00				18.27	
	12/23/2014	1017034	01	17.73	0.00		0.00	0.00				17.73	
	12/23/2014	1017049	01	19.55	0.00		0.00	0.00				19.55	
	12/23/2014	1017051	01	18.79	0.00		0.00	0.00				18.79	
	12/23/2014	1017069	01	18.80	0.00		0.00	0.00				18.80	
	12/23/2014	1017080	01	20.97	0.00		0.00	0.00				20.97	
	12/23/2014	1017086	01	16.03	0.00		0.00	0.00				16.03	
	12/23/2014	1017103	01	16.35	0.00		0.00	0.00				16.35	
	12/23/2014	1017107	01	13.48	0.00		0.00	0.00				13.48	
	12/23/2014	1017117	01	17.35	0.00		0.00	0.00				17.35	
	12/23/2014	1017120	01	16.68	0.00		0.00	0.00				16.68	
	12/23/2014	1017122	01	17.60	0.00		0.00	0.00				17.60	
	12/23/2014	1017132	01	17.47	0.00		0.00	0.00				17.47	
	12/23/2014	1017134	01	14.49	0.00		0.00	0.00				14.49	
VG - SW-CONT SOIL				542.17	0.00	YD	0.00	0.00	YD			542.17	TN
	Totals:			**542.17**	**0.00**		**0.00**	**0.00**				**542.17**	
	Grand Totals:			**542.17**	**0.00**		**0.00**	**0.00**				**542.17**	
												542.17	TN

Activity by Customer and Material (with Weight In/Out)

Date Range: 12/24/2014 to 12/24/2014

Customer Range: 333341 to 333341

Details

	Date	Ticket #		Inbound Weight (Tons)	Inbound Volume	UOM	Outbound Weight (Tons)	Outbound Volume	UOM	Count Inboun	Count Outbound	Billing Qty	UOM
Cust # - Name: 333341 - CANTON DROP FORGE													
	12/24/2014	1017171	01	17.15	0.00		0.00	0.00				17.15	
	12/24/2014	1017176	01	16.18	0.00		0.00	0.00				16.18	
	12/24/2014	1017182	01	17.05	0.00		0.00	0.00				17.05	
	12/24/2014	1017184	01	17.13	0.00		0.00	0.00				17.13	
	12/24/2014	1017185	01	16.14	0.00		0.00	0.00				16.14	
	12/24/2014	1017196	01	16.39	0.00		0.00	0.00				16.39	
	12/24/2014	1017197	01	18.92	0.00		0.00	0.00				18.92	
	12/24/2014	1017201	01	16.84	0.00		0.00	0.00				16.84	
	12/24/2014	1017207	01	18.06	0.00		0.00	0.00				18.06	
	12/24/2014	1017210	01	16.83	0.00		0.00	0.00				16.83	
	12/24/2014	1017211	01	17.29	0.00		0.00	0.00				17.29	
	12/24/2014	1017212	01	21.04	0.00		0.00	0.00				21.04	
	12/24/2014	1017214	01	17.01	0.00		0.00	0.00				17.01	
	12/24/2014	1017219	01	14.50	0.00		0.00	0.00				14.50	
	12/24/2014	1017229	01	16.21	0.00		0.00	0.00				16.21	
	12/24/2014	1017230	01	17.61	0.00		0.00	0.00				17.61	
	12/24/2014	1017231	01	16.50	0.00		0.00	0.00				16.50	
	12/24/2014	1017233	01	18.25	0.00		0.00	0.00				18.25	
	12/24/2014	1017246	01	14.23	0.00		0.00	0.00				14.23	
	12/24/2014	1017258	01	17.37	0.00		0.00	0.00				17.37	
	12/24/2014	1017266	01	17.62	0.00		0.00	0.00				17.62	
	12/24/2014	1017277	01	17.14	0.00		0.00	0.00				17.14	
	12/24/2014	1017286	01	16.12	0.00		0.00	0.00				16.12	
	12/24/2014	1017298	01	14.66	0.00		0.00	0.00				14.66	
VG - SW-CONT SOIL				406.24	0.00	YD	0.00	0.00	YD	0.00	0.00	406.24	TN
	Totals:			**406.24**	**0.00**		**0.00**	**0.00**		**0.00**	**0.00**	**406.24**	
	Grand Totals:			**406.24**	**0.00**		**0.00**	**0.00**		**0.00**	**0.00**	**406.24**	
												406.24	TN

Summary by Materials (with Fees)

VG - SW-CONT SOIL				406.24	0.00		0.00	0.00				406.24	TN
	Totals:			**406.24**	**0.00**		**0.00**	**0.00**				**406.24**	
												406.24	TN

Detail Customer Activity Report

All Ticket Types

December 29, 2014 to December 29, 2014

History and Waiting

Specific Customer: 333341

333341- CANTON DROP FORGE

Ticket Date	Facility & Ticket		Contract	Truck #	Container	Material	Billing Quantity	
12/29/2014	I	01	1017608 36841420467	J87		SW-CONT SOIL	17.80	TN
12/29/2014	I	01	1017611 36841420467	J55		SW-CONT SOIL	18.11	TN
12/29/2014	I	01	1017614 36841420467	J54		SW-CONT SOIL	18.18	TN
12/29/2014	I	01	1017616 36841420467	J53		SW-CONT SOIL	18.24	TN
12/29/2014	I	01	1017617 36841420467	J61		SW-CONT SOIL	14.34	TN
12/29/2014	I	01	1017620 36841420467	J2347		SW-CONT SOIL	19.44	TN
12/29/2014	I	01	1017629 36841420467	J6716		SW-CONT SOIL	20.22	TN
12/29/2014	I	01	1017632 36841420467	J4043		SW-CONT SOIL	21.57	TN
12/29/2014	I	01	1017633 36841420467	J1448		SW-CONT SOIL	19.93	TN
12/29/2014	I	01	1017634 36841420467	J87		SW-CONT SOIL	18.12	TN
12/29/2014	I	01	1017638 36841420467	J54		SW-CONT SOIL	17.40	TN
12/29/2014	I	01	1017639 36841420467	J53		SW-CONT SOIL	18.08	TN
12/29/2014	I	01	1017640 36841420467	J61		SW-CONT SOIL	14.44	TN
12/29/2014	I	01	1017643 36841420467	J2347		SW-CONT SOIL	19.73	TN
12/29/2014	I	01	1017646 36841420467	J6716		SW-CONT SOIL	20.35	TN
12/29/2014	I	01	1017648 36841420467	J4043		SW-CONT SOIL	21.39	TN
12/29/2014	I	01	1017650 36841420467	J55		SW-CONT SOIL	18.76	TN
12/29/2014	I	01	1017653 36841420467	J1448		SW-CONT SOIL	21.46	TN
12/29/2014	I	01	1017655 36841420467	J87		SW-CONT SOIL	20.63	TN
12/29/2014	I	01	1017663 36841420467	J6412		SW-CONT SOIL	21.07	TN
12/29/2014	I	01	1017664 36841420467	J53		SW-CONT SOIL	19.88	TN
12/29/2014	I	01	1017665 36841420467	J54		SW-CONT SOIL	18.20	TN
12/29/2014	I	01	1017668 36841420467	J61		SW-CONT SOIL	15.26	TN
12/29/2014	I	01	1017669 36841420467	J2347		SW-CONT SOIL	19.81	TN
12/29/2014	I	01	1017670 36841420467	J6716		SW-CONT SOIL	21.38	TN
12/29/2014	I	01	1017674 36841420467	J4043		SW-CONT SOIL	20.00	TN
12/29/2014	I	01	1017675 36841420467	J55		SW-CONT SOIL	16.67	TN
12/29/2014	I	01	1017685 36841420467	J1448		SW-CONT SOIL	18.49	TN
12/29/2014	I	01	1017689 36841420467	J6412		SW-CONT SOIL	19.30	TN
12/29/2014	I	01	1017692 36841420467	J61		SW-CONT SOIL	14.77	TN
12/29/2014	I	01	1017708 36841420467	J87		SW-CONT SOIL	17.55	TN
12/29/2014	I	01	1017709 36841420467	J53		SW-CONT SOIL	16.58	TN
12/29/2014	I	01	1017710 36841420467	J4043		SW-CONT SOIL	18.85	TN
12/29/2014	I	01	1017712 36841420467	J54		SW-CONT SOIL	16.30	TN
12/29/2014	I	01	1017714 36841420467	J2347		SW-CONT SOIL	19.63	TN

Ticket Date	Facility & Ticket	Contract	Truck #	Container	Material	Billing Quantity	
12/29/2014	I 01	1017715 36841420467	J6716		SW-CONT SOIL	18.73	TN
12/29/2014	I 01	1017725 36841420467	J55		SW-CONT SOIL	16.94	TN
12/29/2014	I 01	1017726 36841420467	J6412		SW-CONT SOIL	18.52	TN
12/29/2014	I 01	1017737 36841420467	J61		SW-CONT SOIL	14.39	TN
12/29/2014	I 01	1017741 36841420467	J1448		SW-CONT SOIL	18.75	TN
12/29/2014	I 01	1017744 36841420467	J87		SW-CONT SOIL	17.30	TN
12/29/2014	I 01	1017745 36841420467	J4043		SW-CONT SOIL	18.88	TN
12/29/2014	I 01	1017748 36841420467	J54		SW-CONT SOIL	18.41	TN
12/29/2014	I 01	1017752 36841420467	J2347		SW-CONT SOIL	18.19	TN
12/29/2014	I 01	1017753 36841420467	J6716		SW-CONT SOIL	20.75	TN
12/29/2014	I 01	1017762 36841420467	J55		SW-CONT SOIL	18.67	TN
12/29/2014	I 01	1017770 36841420467	J6412		SW-CONT SOIL	19.48	TN
12/29/2014	I 01	1017776 36841420467	J61		SW-CONT SOIL	16.53	TN
12/29/2014	I 01	1017780 36841420467	J1448		SW-CONT SOIL	19.62	TN
12/29/2014	I 01	1017786 36841420467	J87		SW-CONT SOIL	17.28	TN
12/29/2014	I 01	1017790 36841420467	J4043		SW-CONT SOIL	18.86	TN
12/29/2014	I 01	1017792 36841420467	J2347		SW-CONT SOIL	19.47	TN
12/29/2014	I 01	1017793 36841420467	J54		SW-CONT SOIL	17.33	TN
12/29/2014	I 01	1017794 36841420467	J6716		SW-CONT SOIL	20.12	TN
12/29/2014	I 01	1017797 36841420467	J53		SW-CONT SOIL	17.46	TN
12/29/2014	I 01	1017802 36841420467	J55		SW-CONT SOIL	19.94	TN
12/29/2014	I 01	1017810 36841420467	J6412		SW-CONT SOIL	19.15	TN
12/29/2014	I 01	1017811 36841420467	J61		SW-CONT SOIL	15.44	TN
12/29/2014	I 01	1017812 36841420467	J1448		SW-CONT SOIL	19.82	TN
12/29/2014	I 01	1017814 36841420467	J87		SW-CONT SOIL	18.42	TN
12/29/2014	I 01	1017817 36841420467	J2347		SW-CONT SOIL	17.27	TN
12/29/2014	I 01	1017819 36841420467	J4043		SW-CONT SOIL	20.22	TN
12/29/2014	I 01	1017820 36841420467	J6716		SW-CONT SOIL	18.11	TN
12/29/2014	I 01	1017821 36841420467	J54		SW-CONT SOIL	15.97	TN
12/29/2014	I 01	1017824 36841420467	J53		SW-CONT SOIL	17.68	TN

Tickets 65 Items Reported: 65

Material Summary	Weight Inbound	Weight Outbound		Volume Inbound	Volume Outbound		Count Inbound	Count Outbound	Billing Quantity	
VG - SW-CONT SOIL	1,199.63	0.00	TN	0.00	0.00	Y	0.00	0.00	1,199.63	TN

Detail Customer Activity Report

All Ticket Types

December 30, 2014 to December 30, 2014

History and Waiting

Specific Customer: 333341

333341- CANTON DROP FORGE

Ticket Date	Facility & Ticket		Contract	Truck #	Container	Material		Billing Quantity	
12/30/2014	I	01	1017854 36841420467	J2347		SW-CONT SOIL	#	18.06	TN
12/30/2014	I	01	1017855 36841420467	J4043		SW-CONT SOIL	#	18.05	TN
12/30/2014	I	01	1017858 36841420467	J87		SW-CONT SOIL	#	17.03	TN
12/30/2014	I	01	1017860 36841420467	J53		SW-CONT SOIL	#	17.20	TN
12/30/2014	I	01	1017861 36841420467	J55		SW-CONT SOIL	#	17.77	TN
12/30/2014	I	01	1017864 36841420467	J61		SW-CONT SOIL	#	13.63	TN
12/30/2014	I	01	1017865 36841420467	J54		SW-CONT SOIL	#	18.56	TN
12/30/2014	I	01	1017877 36841420467	J7848		SW-CONT SOIL	#	19.99	TN
12/30/2014	I	01	1017882 36841420467	J2347		SW-CONT SOIL	#	18.13	TN
12/30/2014	I	01	1017885 36841420467	J4043		SW-CONT SOIL	#	20.21	TN
12/30/2014	I	01	1017887 36841420467	J87		SW-CONT SOIL	#	17.23	TN
12/30/2014	I	01	1017889 36841420467	J53		SW-CONT SOIL	#	18.32	TN
12/30/2014	I	01	1017890 36841420467	J55		SW-CONT SOIL	#	18.42	TN
12/30/2014	I	01	1017891 36841420467	J61		SW-CONT SOIL	#	14.82	TN
12/30/2014	I	01	1017898 36841420467	J54		SW-CONT SOIL	#	21.45	TN
12/30/2014	I	01	1017903 36841420467	J7848		SW-CONT SOIL	#	20.34	TN
12/30/2014	I	01	1017911 36841420467	J2347		SW-CONT SOIL	#	19.48	TN
12/30/2014	I	01	1017916 36841420467	J2612		SW-CONT SOIL	#	19.40	TN
12/30/2014	I	01	1017917 36841420467	J4043		SW-CONT SOIL	#	17.57	TN
12/30/2014	I	01	1017922 36841420467	J53		SW-CONT SOIL	#	16.01	TN
12/30/2014	I	01	1017923 36841420467	J87		SW-CONT SOIL	#	16.08	TN
12/30/2014	I	01	1017925 36841420467	J61		SW-CONT SOIL	#	12.72	TN
12/30/2014	I	01	1017929 36841420467	J55		SW-CONT SOIL	#	16.36	TN
12/30/2014	I	01	1017931 36841420467	J54		SW-CONT SOIL	#	17.64	TN
12/30/2014	I	01	1017934 36841420467	J7848		SW-CONT SOIL	#	18.32	TN
12/30/2014	I	01	1017940 36841420467	J2612		SW-CONT SOIL	#	17.61	TN
12/30/2014	I	01	1017941 36841420467	J2347		SW-CONT SOIL	#	17.88	TN
12/30/2014	I	01	1017947 36841420467	J4043		SW-CONT SOIL	#	20.26	TN
12/30/2014	I	01	1017952 36841420467	J61		SW-CONT SOIL	#	14.24	TN
12/30/2014	I	01	1017964 36841420467	J87		SW-CONT SOIL	#	18.17	TN
12/30/2014	I	01	1017965 36841420467	J53		SW-CONT SOIL	#	16.59	TN
12/30/2014	I	01	1017967 36841420467	J55		SW-CONT SOIL	#	18.00	TN
12/30/2014	I	01	1017975 36841420467	J2612		SW-CONT SOIL	#	19.02	TN
12/30/2014	I	01	1017977 36841420467	J2347		SW-CONT SOIL	#	19.83	TN
12/30/2014	I	01	1017978 36841420467	J7848		SW-CONT SOIL	#	19.46	TN

Ticket Date	Facility & Ticket		Contract	Truck #	Container	Material		Billing Quantity	
12/30/2014	I	01	1017981 36841420467	J4043		SW-CONT SOIL	#	16.41	TN
12/30/2014	I	01	1017991 36841420467	J54		SW-CONT SOIL	#	15.61	TN
12/30/2014	I	01	1017993 36841420467	J61		SW-CONT SOIL	#	12.75	TN
12/30/2014	I	01	1018001 36841420467	J87		SW-CONT SOIL	#	17.30	TN
12/30/2014	I	01	1018003 36841420467	J53		SW-CONT SOIL	#	16.96	TN
12/30/2014	I	01	1018004 36841420467	J55		SW-CONT SOIL	#	17.77	TN
12/30/2014	I	01	1018013 36841420467	J2347		SW-CONT SOIL	#	19.93	TN
12/30/2014	I	01	1018016 36841420467	J7848		SW-CONT SOIL	#	20.11	TN
12/30/2014	I	01	1018018 36841420467	J2612		SW-CONT SOIL	#	18.57	TN
12/30/2014	I	01	1018019 36841420467	J4043		SW-CONT SOIL	#	19.31	TN
12/30/2014	I	01	1018021 36841420467	J54		SW-CONT SOIL	#	16.56	TN
12/30/2014	I	01	1018022 36841420467	J61		SW-CONT SOIL	#	15.35	TN
12/30/2014	I	01	1018024 36841420467	J87		SW-CONT SOIL	#	17.19	TN
12/30/2014	I	01	1018029 36841420467	J53		SW-CONT SOIL	#	18.62	TN
12/30/2014	I	01	1018032 36841420467	J55		SW-CONT SOIL	#	18.69	TN
12/30/2014	I	01	1018051 36841420467	J2347		SW-CONT SOIL	#	19.60	TN
12/30/2014	I	01	1018056 36841420467	J4043		SW-CONT SOIL	#	19.26	TN
12/30/2014	I	01	1018059 36841420467	J61		SW-CONT SOIL	#	14.54	TN
12/30/2014	I	01	1018060 36841420467	J87		SW-CONT SOIL	#	15.32	TN
12/30/2014	I	01	1018062 36841420467	J54		SW-CONT SOIL	#	15.49	TN
12/30/2014	I	01	1018065 36841420467	J2612		SW-CONT SOIL	#	17.64	TN
12/30/2014	I	01	1018067 36841420467	J53		SW-CONT SOIL	#	15.83	TN
12/30/2014	I	01	1018071 36841420467	J7848		SW-CONT SOIL	#	18.30	TN

Tickets 58 Items Reported: 58

Material Summary	Weight		Volume			Count		Billing
	Inbound	Outbound	Inbound	Outbound		Inbound	Outbound	Quantity
VG - SW-CONT SOIL	1,020.96	0.00 TN	0.00	0.00	Y	0.00	0.00	1,020.96 TN

Detail Customer Activity Report

All Ticket Types | December 31, 2014 to December 31, 2014 | All Facilities

History and Waiting | Specific Customer: 333341

333341- CANTON DROP FORGE

Ticket Date	Facility & Ticket	Contract	Truck #	Container	Material	Billing Quantity	
12/31/2014	I 01	1018116 36841420467	J6716		SW-CONT SOIL	19.23	TN
12/31/2014	I 01	1018121 36841420467	J4043		SW-CONT SOIL	19.21	TN
12/31/2014	I 01	1018123 36841420467	J61		SW-CONT SOIL	14.03	TN
12/31/2014	I 01	1018125 36841420467	J87		SW-CONT SOIL	14.38	TN
12/31/2014	I 01	1018128 36841420467	J53		SW-CONT SOIL	16.16	TN
12/31/2014	I 01	1018129 36841420467	J55		SW-CONT SOIL	17.04	TN
12/31/2014	I 01	1018132 36841420467	J54		SW-CONT SOIL	16.66	TN
12/31/2014	I 01	1018142 36841420467	J3647		SW-CONT SOIL	18.16	TN
12/31/2014	I 01	1018146 36841420467	J6716		SW-CONT SOIL	20.49	TN
12/31/2014	I 01	1018147 36841420467	J4043		SW-CONT SOIL	20.16	TN
12/31/2014	I 01	1018148 36841420467	J61		SW-CONT SOIL	13.72	TN
12/31/2014	I 01	1018155 36841420467	J87		SW-CONT SOIL	16.62	TN
12/31/2014	I 01	1018156 36841420467	J54		SW-CONT SOIL	17.29	TN
12/31/2014	I 01	1018158 36841420467	J53		SW-CONT SOIL	18.86	TN
12/31/2014	I 01	1018161 36841420467	J3647		SW-CONT SOIL	21.79	TN
12/31/2014	I 01	1018174 36841420467	J6716		SW-CONT SOIL	22.06	TN
12/31/2014	I 01	1018179 36841420467	J4043		SW-CONT SOIL	22.86	TN
12/31/2014	I 01	1018181 36841420467	J61		SW-CONT SOIL	16.26	TN
12/31/2014	I 01	1018183 36841420467	J54		SW-CONT SOIL	20.04	TN
12/31/2014	I 01	1018185 36841420467	J87		SW-CONT SOIL	20.97	TN
12/31/2014	I 01	1018186 36841420467	J53		SW-CONT SOIL	20.85	TN
12/31/2014	I 01	1018198 36841420467	J6716		SW-CONT SOIL	21.03	TN
12/31/2014	I 01	1018202 36841420467	J4043		SW-CONT SOIL	21.52	TN
12/31/2014	I 01	1018205 36841420467	J61		SW-CONT SOIL	15.86	TN
12/31/2014	I 01	1018211 36841420467	J3647		SW-CONT SOIL	21.53	TN
12/31/2014	I 01	1018218 36841420467	J87		SW-CONT SOIL	19.16	TN
12/31/2014	I 01	1018219 36841420467	J53		SW-CONT SOIL	18.36	TN
12/31/2014	I 01	1018231 36841420467	J4948		SW-CONT SOIL	20.52	TN
12/31/2014	I 01	1018240 36841420467	J54		SW-CONT SOIL	19.21	TN
12/31/2014	I 01	1018241 36841420467	J6716		SW-CONT SOIL	19.98	TN
12/31/2014	I 01	1018249 36841420467	J4043		SW-CONT SOIL	22.94	TN
12/31/2014	I 01	1018250 36841420467	J61		SW-CONT SOIL	17.08	TN

Tickets 32 Items Reported: 32

Material Summary	Weight Inbound	Weight Outbound		Volume Inbound	Volume Outbound		Count Inbound	Count Outbound	Billing Quantity	
VG - SW-CONT SOIL	604.03	0.00	TN	0.00	0.00	Y	0.00	0.00	604.03	TN

3

ATTACHMENT 3

PHOTOGRAPHS
POND 1 EXCAVATION ACTIVITIES

Photograph Log

Photo 1: 12.8.14_Free Phase Water Removal

Photo 2: 12.8.14_Free Phase Water Removal

Photo 3: 12.8.14_Free Phase Water Removal

Photo 4: 12.11.14_Biocell Removal

Photo 5: 12.15.14_Biocell Removal

Photo 6: 12.15.14_Biocell Removal

TRC Job No.	Photographs Taken By:	Page No.	Client:	Site Name & Address:
216406.0000	Ryan Pulliam	1 of 4	Canton Drop Forge	4575 Southway Street SW Canton, Ohio

Photograph Log

Photo 7: 12.19.14_Biocell Removal

Photo 8: 12.19.14_Biocell Removal

Photo 9: 12.22.14_Biocell Removal

Photo 10: 12.22.14_Sidewall Clay Liner

Photo 11: 12.23.14_Sidewall Clay Liner

Photo 12: 12.23.14_Biocell Removal

Photograph Log

Photo 13: 12.23.14_Sidewall Trench

Photo 14: 12.23.14_Biocell Clay Liner Bottom

Photo 15: 12.30.14_SE Corner

Photo 16: 12.30.14_Clay Liner Visible

Photo 17: 12.30.14_Facing North Remaining Biocell

Photo 18: 12.30.14_Facing West Biocell Over Clay Liner

Photograph Log

Photo 19: 12.30.14_Clay Liner Visible

Photo 20: Pond 2 Oct 24 2014

Photo 21: Pond 2 Oct 24 2014

TRC Job No.	Photographs Taken By:	Page No.	Client:	Site Name & Address:
216406.0000	Ryan Pulliam	4 of 4	Canton Drop Forge	4575 Southway Street SW Canton, Ohio