LUG WAFER PATTERN CHECK VALVE

F/L

LUG WAFER PATTERN CHECK VALVE

HIGH PERFORMANCE HIGH FLOW

LARGE UNOBSTRUCTED FLOW PATH

RUGGED, HIGH INTEGRITY CONSTRUCTION

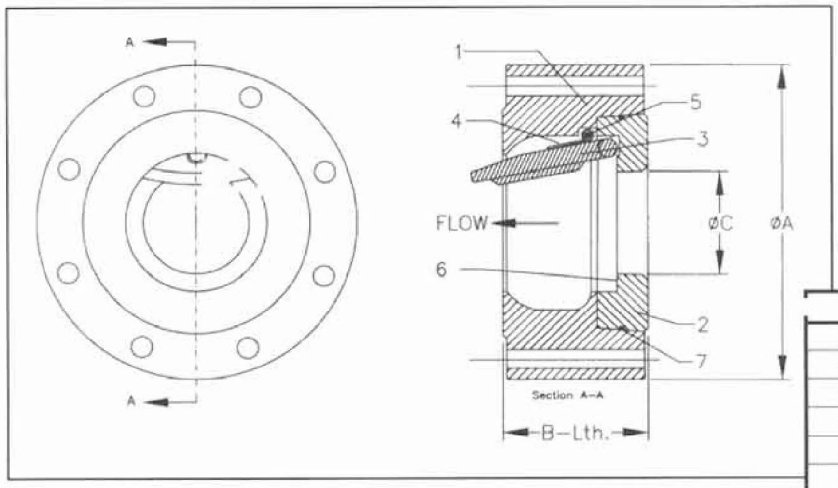

1	BODY
2	SEAT INSERT
3	FLAPPER
4	SPRING
5	SPRING PIN
6	SEAT SEAL
7	INSERT RING

Series F/L Installation Dimensions per API standard 594

SIZE	ASME CLASS	A-Dia		B-LTH		C-Dia		Bolt Holes				Bolt Circle		Flange Face	WEIGHT	
									Diameter							
		inch	mm	inch	mm	inch	mm	Qty	inch	mm	Thrds	inch	mm		lbs.	kg.
1" 25mm	150	4-1/4	108	1-7/8	48	7/8	22	4	5/8	16	1/2-13	3-1/8	79	RF/FF	6	3
	300-600	4-7/8	124	1-7/8	48	7/8	22	4	3/4	19	5/8-11	3-1/2	89	RF/RJ-16	11	5
	900-1500	5-7/8	149	1-7/8	48	7/8	22	4	1	25	7/8-9	4	102	RF/RJ-16	14	6
	2500	6-1/4	159	2-1/8	48	7/8	22	4	1	25	7/8-9	4-1/4	108	RF/RJ-18	18	8
1-1/2" 40mm	150	5	127	2-3/8	60	1-5/16	33	4	5/8	16	1/2-13	3-7/8	98	RF/FF	12	5
	300-600	6-1/8	156	2-3/8	60	1-5/16	33	4	7/8	22	3/4-10	4-1/2	114	RF/RJ-20	17	8
	900-1500	7	178	2-3/8	60	1-5/16	33	4	1-1/8	29	1-8	4-7/8	124	RF/RJ-20	26	12
	2500	8	203	2-3/4	70	1-5/16	33	4	1-1/4	32	1-1/8-8	5-3/4	146	RF/RJ-23	38	17
2" 50mm	150	6	152	2-3/8	60	1-3/4	44	4	3/4	19	5/8-11	4-3/4	121	RF/FF	15	7
	300-600	6-1/2	165	2-3/8	60	1-3/4	44	8	3/4	19	5/8-11	5	127	RF/RJ-23	18	8
	900-1500	8-1/2	216	2-3/4	70	1-3/4	44	8	1	25	7/8-9	6-1/2	165	RF/RJ-24	42	19
	2500	9-1/4	235	2-3/4	70	1-3/4	44	8	1-1/8	29	1-8	6-3/4	171	RF/RJ-26	51	23
2-1/2" 65mm	150	7	178	2-5/8	67	1-7/8	48	4	3/4	19	5/8-11	5-1/2	140	RF/FF	24	11
	300-600	7-1/2	191	2-5/8	67	1-7/8	48	8	7/8	22	3/4-10	5-7/8	149	RF/RJ-26	26	12
	900-1500	9-5/8	244	3-1/4	83	1-7/8	48	8	1-1/8	29	1-8	7-1/2	191	RF/RJ-27	61	28
	2500	10-1/2	267	3-1/4	83	1-7/8	48	8	1-1/4	32	1-1/8-8	7-3/4	197	RF/RJ-28	73	33
3" 75mm	150	7-1/2	191	2-7/8	73	2-11/16	68	4	3/4	19	5/8-11	6	152	RF/FF	31	14
	300-600	8-1/4	210	2-7/8	73	2-11/16	68	8	7/8	22	3/4-10	6-5/8	168	RF/RJ-31	36	16
	900	9-1/2	241	3-1/4	83	2-11/16	68	8	1	25	7/8-9	7-1/2	191	RF/RJ-31	60	27
	1500	10-1/2	267	3-1/4	83	2-11/16	68	8	1-1/4	32	1-1/8-8	8	203	RF/RJ-35	73	33
	2500	12	305	3-3/8	86	2-11/16	68	8	1-3/8	35	1-1/4-8	9	229	RF/RJ-32	101	46

Dimensions shown are for installation between ASME B16.5, ASME B16.47 Series A or MSS SP-44 flanges
HY-GRADE check valves are also available in ASME B16.47 Series B (old API 605) or DIN sizes.
Double flanged wafer check valves are offered in certain sizes. Consult HY-GRADE for availability.

HY-GRADE VALVE, INC.
16250 Greeno Road (36532) P.O. Box 388 ▪ Fairhope, AL 36533
Phone: (334)928-1992 ▪ Fax: (334)928-3444 ▪ Internet:WWW.HY-GRADE.COM

ISO 9001 Registered for API 594 Check Valves

Accredited by the Dutch Council for Accreditation

CUSA-EPA-0002728

F/L

LUG WAFER PATTERN CHECK VALVE

Dimensions shown are for installation between ASME B16.5, ASME B16.47 Series A or MSS SP-44 flanges. HY-GRADE check valves are also available in ASME B16.47 Series B (old API 605) or DIN sizes.

Series F/L Installation Dimensions per API standard 594 Continued

SIZE	ASME CLASS	A-Dia		B-LTH		C-Dia		Bolt Holes				Bolt Circle		Flange Face	WEIGHT	
									Diameter							
		inch	mm	inch	mm	inch	mm	Qty	inch	mm	Thrds	inch	mm		lbs.	kg.
4" 100mm	150	9	229	2-7/8	73	3-3/8	86	8	3/4	19	5/8-11	7-1/2	191	RF/FF	41	19
	300	10	254	2-7/8	73	3-3/8	86	8	7/8	22	3/4-10	7-7/8	200	RF/FF	52	24
	600	10-3/4	273	3-1/8	79	3-3/8	86	8	1	25	7/8-9	8-1/2	216	RF/RJ-37	75	34
	900	11-1/2	292	4	102	3-3/8	86	8	1-1/4	32	1-1/8-8	9-1/4	235	RF/RJ-37	105	48
	1500	12-1/4	311	4	102	3-3/8	86	8	1-3/8	35	1-1/4-8	9-1/2	241	RF/RJ-39	124	56
	2500	14	356	4-1/8	105	3-3/8	86	8	1-5/8	41	1-1/2-8	10-3/4	273	RF/RJ-38	170	77
6" 150mm	150	11	279	3-7/8	98	4-3/4	121	8	7/8	22	3/4-10	9-1/2	241	RF/FF	80	36
	300	12-1/2	318	3-7/8	98	4-3/4	121	12	7/8	22	3/4-10	10-5/8	270	RF/FF	105	48
	600	14	356	5-3/8	137	4-3/4	121	12	1-1/8	29	1-8	11-1/2	292	RF/RJ-45	198	90
	900	15	381	6-1/4	159	4-3/4	121	12	1-1/4	32	1-1/8-8	12-1/2	318	RF/RJ-45	265	120
	1500	15-1/2	394	6-1/4	159	4-3/4	121	12	1-1/2	38	1-3/8-8	12-1/2	318	RF/RJ-46	289	131
	2500	19	483	6-1/4	159	4-3/4	121	8	2-1/8	54	2-8	14-1/2	368	RF/RJ-47	453	206
8" 200mm	150	13-1/2	343	5	127	6-3/4	171	8	7/8	22	3/4-10	11-3/4	298	RF/FF	140	64
	300	15	381	5	127	6-3/4	171	12	1	25	7/8-9	13	330	RF/FF	180	82
	600	16-1/2	419	6-1/2	165	6-3/4	171	12	1-1/4	32	1-1/8-8	13-3/4	349	RF/RJ-49	299	136
	900	18-1/2	470	8-1/8	206	6-3/4	171	12	1-1/2	38	1-3/8-8	15-1/2	394	RF/RJ-49	478	217
	1500	19	483	8-1/8	206	6-3/4	171	12	1-3/4	44	1-5/8-8	15-1/2	394	RF/RJ-50	518	235
	2500	21-3/4	552	8-1/8	206	6-3/4	171	12	2-1/8	54	2-8	17-1/4	438	RF/RJ-51	720	327
10" 250mm	150	16	406	5-3/4	146	8	203	12	1	25	7/8-9	14-1/4	362	RF/FF	210	95
	300	17-1/2	445	5-3/4	146	8	203	16	1-1/8	29	1-8	15-1/4	387	RF/FF	260	118
	600	20	508	8-3/8	213	8	203	16	1-3/8	35	1-1/4-8	17	432	RF/RJ-53	560	255
	900	21-1/2	546	9-1/2	241	7-7/8	200	16	1-1/2	38	1-3/8-8	18-1/2	470	RF/RJ-53	775	352
	1500	23	584	9-3/4	248	7-3/4	197	12	2	51	1-7/8-8	19	483	RF/RJ-54	944	429
	2500	26-1/2	673	10	254	7-3/4	197	12	2-5/8	67	2-1/2-8	21-1/4	540	RF/RJ-55	1342	610
12" 300mm	150	19	483	7-1/8	181	9-7/8	251	12	1	25	7/8-9	17	432	RF/FF	360	164
	300	20-1/2	521	7-1/8	181	9-7/8	251	16	1-1/4	32	1-1/8-8	17-3/4	451	RF/FF	440	200
	600	22	559	9	229	9-7/8	251	20	1-3/8	35	1-1/4-8	19-1/4	489	RF/RJ-57	673	306
	900	24	610	11-1/2	292	9-3/4	248	20	1-1/2	38	1-3/8-8	21	533	RF/RJ-57	1043	474
	1500	26-1/2	673	12	305	9-1/2	241	16	2-1/8	54	2-8	22-1/2	572	RF/RJ-58	1596	725
	2500	30	762	12	305	9-1/2	241	12	2-7/8	73	2-3/4-8	24-3/8	619	RF/RJ-60	2123	965
14" 350mm	150	21	533	7-1/4	184	11-1/2	292	12	1-1/8	29	1-8	18-3/4	476	RF/FF	453	206
	300	23	584	8-3/4	222	11-1/2	292	20	1-1/4	32	1-1/8-8	20-1/4	514	RF/FF	670	305
	600	23-3/4	603	10-3/4	273	11-1/4	286	20	1-1/2	38	1-3/8-8	20-3/4	527	RF/RJ-61	996	453
	900	25-1/4	641	14	356	11-1/4	286	20	1-5/8	41	1-1/2-8	22	559	RF/RJ-62	1524	693
	1500	29-1/2	749	14	356	11	279	16	2-3/8	60	2-1/4-8	25	635	RF/RJ-63	2247	1021

HY-GRADE VALVE, INC.
16250 Greeno Road (36532) P.O. Box 388 ▪ Fairhope, AL 36533
Phone: (334)928-1992 ▪ Fax: (334)928-3444 ▪ Internet:WWW.HY-GRADE.COM

ISO 9001 Registered for API 594 Check Valves
Accredited by the Dutch Council for Accreditation

LUG WAFER PATTERN CHECK VALVE

Dimensions shown are for installation between ASME B16.5, ASME B16.47 Series A or MSS SP-44 flanges. HY-GRADE check valves are also available in ASME B16.47 Series B (old API 605) or DIN sizes.

Series F/L Installation Dimensions per API standard 594 Continued

SIZE	ASME CLASS	A-Dia		B-LTH		C-Dia		Bolt Holes				Bolt Circle		Flange Face	WEIGHT	
									Diameter							
		inch	mm	inch	mm	inch	mm	Qty	inch	mm	Thrds	inch	mm		lbs.	kg.
16" 400mm	150	23-1/2	597	7-1/2	191	13	330	16	1-1/8	29	1-8	21-1/4	540	RF/FF	573	260
	300	25-1/2	648	9-1/8	232	13	330	20	1-3/8	35	1-1/4-8	22-1/2	572	RF/FF	869	395
	600	27	686	12	305	13	330	20	1-5/8	41	1-1/2-8	23-3/4	603	RF/RJ-65	1246	566
	900	27-3/4	705	15-1/8	384	12-3/4	324	20	1-3/4	44	1-5/8-8	24-1/4	616	RF/RJ-66	1961	891
	1500	32-1/2	826	15-1/8	384	12-3/4	324	16	2-5/8	67	2-1/2-8	27-3/4	705	RF/RJ-67	2924	1329
18" 450mm	150	25	635	8	203	14-1/2	368	16	1-1/4	32	1-1/8-8	22-3/4	578	RF/FF	671	305
	300	28	711	10-3/8	264	14-1/2	368	24	1-3/8	35	1-1/4-8	24-3/4	629	RF/FF	1279	581
	600	29-1/4	743	14-1/4	362	14-1/2	368	20	1-3/4	44	1-5/8-8	25-3/4	654	RF/RJ-69	1971	896
	900	31	787	17-3/4	451	14	356	20	2	51	1-7/8-8	27	686	RF/RJ-70	2884	1311
	1500	36	914	18-4/9	468	14	356	16	2-7/8	73	2-3/4-8	30-1/2	775	RF/RJ-71	4385	1993
20" 500mm	150	27-1/2	699	8-5/8	219	15-3/4	400	20	1-1/4	32	1-1/8-8	25	635	RF/FF	889	404
	300	30-1/2	775	11-1/2	292	15-1/2	394	24	1-3/8	35	1-1/4-8	27	686	RF/FF	1710	777
	600	32	813	14-1/2	368	15-1/2	394	24	1-3/4	44	1-5/8-8	28-1/2	724	RF/RJ-73	2437	1108
	900	33-3/4	857	17-3/4	451	15	381	20	2-1/8	54	2-8	29-1/2	749	RF/RJ-74	3400	1545
	1500	38-3/4	984	21	533	15	381	16	3-1/8	79	3-8	32-3/4	832	RF/RJ-75	6098	2772
24" 600mm	150	32	813	8-3/4	222	19-1/2	495	20	1-3/8	35	1-1/4-8	29-1/2	749	RF/FF	1123	510
	300	36	914	12-1/2	318	19-1/2	495	24	1-5/8	41	1-1/2-8	32	813	RF/FF	2417	1099
	600	37	940	17-1/4	438	19-1/2	495	24	2	51	1-7/8-8	33	838	RF/RJ-77	3615	1643
	900	41	1041	19-1/2	495	19	483	20	2-5/8	67	2-1/2-8	35-1/2	902	RF/RJ-78	5440	2473
26" 650mm	150	34-1/4	870	14	356	20-1/2	521	24	1-3/8	35	1-1/4-8	31-3/4	806	RF/FF	2270	1032
	300	38-1/4	972	14	356	20-1/2	521	28	1-3/4	44	1-5/8-8	34-1/2	876	RF/RJ-93	3030	1377
	600	40	1016	18	457	20	508	28	2	51	1-7/8-8	36	914	RF/RJ-93	4480	2036
28" 700mm	150	36-1/2	927	15	381	21-1/2	546	28	1-3/8	35	1-1/4-8	34	864	RF/FF	2720	1236
	300	40-3/4	1035	15	381	21	533	28	1-3/4	44	1-5/8-8	37	940	RF/RJ-94	3790	1723
	600	42-1/4	1073	19	483	20	508	28	2-1/8	54	2-8	38	965	RF/RJ-94	5273	2397
30" 750mm	150	38-3/4	984	12	305	24	610	28	1-3/8	35	1-1/4-8	36	914	RF/FF	2395	1 089
	300	43	1092	14-1/2	368	23	584	28	1-7/8	48	1-3/4-8	39-1/4	997	RF/RJ-95	3747	1703
	600	44-1/2	1130	19-7/8	505	23	584	28	2-1/8	54	2-8	40-1/4	1022	RF/RJ-95	5780	2627
32" 800mm	150	41-3/4	1060	14	356	25	635	28	1-5/8	41	1-1/2-8	38-1/2	978	RF/FF	3137	1426
	300	45-1/4	1149	16	406	24	610	28	2	51	1-7/8-8	41-1/2	1054	RF/RJ-96	4720	2145
	600	47	1194	21	533	23	584	28	2-3/8	60	2-1/4-8	42-1/2	1080	RF/RJ-96	7070	3214
36" 900mm	150	46	1168	14-1/2	368	28	711	32	1-5/8	41	1-1/2-8	42-3/4	1086	RF/FF	3575	1625
	300	50	1270	19	483	27-1/2	699	32	2-1/8	54	2-8	46	1168	RF/RJ-98	6320	2873
40" 950mm	150	50-3/4	1289	16	406	30-1/2	775	36	1-5/8	41	1-1/2-8	47-1/4	1200	RF/FF	4860	2209
42" 1050mm	150	53	1346	17	432	32	813	36	1-5/8	41	1-1/2-8	49-1/2	1257	RF/FF	5599	2545

HY-GRADE VALVE, INC.
16250 Greeno Road (36532) P.O. Box 388 ▪ Fairhope, AL 36533
Phone: (334)928-1992 ▪ Fax: (334)928-3444 ▪ Internet:WWW.HY-GRADE.COM

CUSA-EPA-0002730

Metallic Check Valves - Series "T" "F" "L" "D" "H" and "FF"

Valve Type | End Connection | Body & Insert Material | Spring Material

T	03	-	04	G	-	7	A	F	X	-	N

Pressure Rating | Size | Seal | Flapper Material | Special Feature

Codes for Valve Type

Code	Valve Type
T	Wafer Single Disc
F	Lug wafer with Thru Holes Single Disk
L	Lug wafer with Threaded Holes Single Disc
D	Wafer Dual Disc
FD	Lug wafer with Thru Holes Dual Disk
LD	Lug wafer with Threaded Holes Dual Disc
X	Swing Check - ANSI B16.10 end-to-end
H	Buttweld, Hub, Fanged
FF	Full Bore/Full Opening
FX	Full Bore/Full Opening with external lever
S*	Severe Service Option
A*	Tilt Seat Option
E*	Extended face-to-face Option

Codes forANSI/API Pressure Rating

Code	Rating
01	Class 150
03	Class 300
06	Class 600
09	Class 900
15	Class 1500
25	Class 2500
30	3,000 API 6A
50	5,000 API 6A
10	10,000 API 6A

Size Code

Code	Size
01 to 48	1" to 48"

Code for End Connection

Code	End Connection Type
G	Raised Face (serrated)
F	Flat Face
R	Ring Joint or BX groove
H	Hub Ends
B	Buttwelding ends
O	per customer requirement

*** Examples of Modifiers for Valve Types**

ST = Severe Service Wafer

SX = Severe Service Swing Check - ANSI B16.10 end-to-end

AF = Tilt Seat Lug with Thru Holes

EL = Extended face-to-face Lug with Threaded Holes

AET = Tilt Seat, Extended face-to-face Wafer

Codes for Seal Materials

Code	Material	Temperature Range** °C	Temperature Range** °F
1	Buna-N	-51 to 107	-60 to 225
2	Neoprene	-40 to 107	-40 to 225
3	Butyl	-54 to 163	-65 to 325
4	Kalrez®	-29 to 316	-20 to 600
5	Chemraz®	-29 to 232	-20 to 450
6	AFLAS®	-40 to 218	-40 to 425
7	Viton®	-29 to 204	-20 to 400
8	Teflon®	-157 to 232	-250 to 450
9	EPDM	-54 to 149	-65 to 300
10	Metal-to-Metal	extreme	extreme
11	13% Chrome (410 S.S.) seating surfaces	extreme	extreme
12	316 S.S. seat insert	extreme	extreme
13	Stellite® seat overlay on disc and seat insert	extreme	extreme
14	Stellite® seat overlay on disc only	extreme	extreme
15	Stellite® seat overlay on seat insert only	extreme	extreme
0	As specified by customer		

**Temperatures are for general guidance and may vary per application

HY-GRADE VALVE, INC.
16250 Greeno Road (36532) P.O. Box 388 ▪ Fairhope, AL 36533
Phone: (334)928-1992 ▪ Fax: (334)928-3444 ▪ Internet:WWW.HY-GRADE.COM

CUSA-EPA-0002731

Codes for Body Seat Insert and Disc Material

Code	Material	Applicable SPECIFICATION(S)	
		Wrought (bar, plate or forging)	Equivalent investment or centrifugal cast
A	Carbon Steel	ASTM A105, A106 Gr. C or A516 Gr. 70	
B	Bronze (Navy)		ASTM B61 C92200
C	Nickel-Aluminum Bronze		ASTM B271 or B148 C95800
D	Low Temp. Steel (-50°F)	ASTM A350 Gr. LF2	
E	Low Temp. Steel (-150°F)	ASTM A350 Gr. LF3	
F	316 Stainless Steel	ASTM A240, A479, A182 (UNS S31600)	ASTM A351 Gr. CF8M
G	5% Cr Steel	ASTM A182 Gr. F5	
H	Hastelloy® C276	ASTM B574, B575, B564 (UNS N10276)	ASTM A494 Gr. CW12MW
I	Inconel® 625	ASTM B443, B446, B564 (UNS N06625)	ASTM A494 Gr. CW-6MC
J	317 Stainless Steel	ASTM A240, A479, A182 (UNS S31700)	ASTM A351-CG8M
K	347H Stainless Steel	ASTM A479, A182 (UNS S34709)	ASTM A351-CF8C
L	410 Stainless Steel	ASTM A240, A182 Gr. 6a (UNS S41000)	ASTM A217-CA15
M	Monel®	ASTM B564, B127, B164 (UNS N04400)	ASTM A494 Gr. M35-2
N	25% Cr Duplex Stainless Steel	UNS S32550 or UNS S32750	ASTM A890 Gr. 5A or A351 Gr. CD4MCu
P	6% Moly S.S. (type 254 SMO®)	UNS S31254, UNS N08367, UNS N08926	ASTM A351 Gr. CK3MCuN
R	Incoloy® 825	ASTM B425, B424 (UNS N08825)	ASTM A494 Gr. CU5MCuC
S	Nickel	ASTM B160, B162 (UNS N02200)	ASTM A494 Gr. CZ-100
T	Titanium Grade 2	ASTM B265, B348, B381	
U	22% Cr Duplex Stainless Steel	ASTM A240, A479, A182-F51 (UNS S31803)	ASTM A890 Gr. 4A
W	API 60K Low Alloy Steel	AISI 4130 per API 6A or ASTM A694 Gr. F65	
X	9% Cr - 1% Mo Steel	ASTM A182-F9	
Y	Alloy 20	ASTM B462, B463, B473 (UNS N08020)	ASTM A351 Gr. CN7M
Z	Zirconium	ASTM B493, B550, B551 (UNS R60702)	
0	As specified by customer	Contact HY-GRADE for materials not shown above.	

Codes for Spring Material

Code	Description	Max Temperature **	
		°C	°F
I	Inconel 600	327	620
X	Inconel X750 (standard)	537	1000
E	Elgiloy	327	620
H	Hastelloy	427	800
M	Monel K500	232	450
T	Titanium	288	550
S	316 Stainless Steel	249	480
O	Per customer specifications		

** Temperatures are for general guidance and may vary per application

Codes for Special Features	
Code	Description
N	Material per NACE MR01-75
1	1/8"-27 NPTF tapped gage port
2	1/4"-18 NPTF tapped gage port
3	1/2"-14 NPTF tapped gage port
4	1/4"-18 NPTF tapped drain
5	1/2"-14 NPTF tapped drain
SP	Special Trim or Design as specified by the customer

Model Number Examples

T03-04G-7AFX = Series "T" Wafer check valve, 4" (100mm), Class 300, Raised Face Ends, Viton® seal, Carbon Steel Body & Seat Insert, 316 S.S Flapper, Inconel® X750 Spring.

T01-08G-10FFX = Series "T" Wafer, 8" (200mm), Class 150, Raised Face ends, Metal seal, 316 S.S. Body & Seat Insert, 316 S.S. Flapper, Inconel® X750 Spring.

F09-16R-8AFE-N = Series "F" Lug Wafer check valve with thru holes, 16" (400mm), Class 900, RTJ ends, Teflon® seal, Carbon Steel Body & Seat Insert, 316 S.S. Flapper, Elgiloy Spring, NACE MR01-75 certification.

ST03-06G-10FN = Severe Service - Series "T" Wafer check valve, 6" (150mm), Class 300, Raised Face ends, 316 S.S. Body & Seat Insert, Duplex S.S. Flapper.

X15-02G-15ALX = Series "X" Swing Check with ANSI B16.10 face-to-face, 2" (50mm), Class 1500, Raised Face Ends, Stellite® seat overlay on seat insert, Carbon Steel Body & Seat Insert, type 410 S.S. Flapper, Inconel® X750 Spring

H15-14B-14GLX = Series "H" check valve with Buttwelding ends, 14" (350mm), Class 1500, Stellite® seat overlay on flapper, 5% Cr Body & Seat Insert, 410 S.S. Flapper, Inconel® X750 Spring.

AET09-10R-10AF = Series "T" Wafer check valve with Tilt Seat and Extended body, 10" (250mm), Class 900, RTJ ends, Metal seal, Carbon Steel Body & Seat Insert, 316 S.S. Flapper.

D03-36G-10AFX = Series "D" High Performance Dual Plate Wafer check valve, 36"(900mm), Class 300, Raised Face ends, Metal Seal, Carbon Steel Body & Seat Insert, 316 S.S. Flapper, Inconel® X750 Spring.

HY-GRADE VALVE, INC.
16250 Greeno Road (36532) P.O. Box 388 ▪ Fairhope, AL 36533
Phone: (334)928-1992 ▪ Fax: (334)928-3444 ▪ Internet:WWW.HY-GRADE.COM

CALCULATED CRACKING PRESSURE (PSI)

	SPRING ASSISTED		NON-SPRING ASSISTED	
SIZE	HORIZONTAL FLOW	VERTICAL UP FLOW	HORIZONTAL FLOW	VERTICAL UP FLOW
1"	0.67	0.78	0.01	0.12
1-1/2"	0.28	0.39	0.01	0.11
2"	0.32	0.43	0.01	0.12
2-1/2"	0.52	0.64	0.01	0.13
3"	0.21	0.31	0.01	0.11
4"	0.17	0.31	0.01	0.13
6"	0.25	0.43	0.02	0.18
8"	0.12	0.31	0.02	0.18
10"	0.16	0.38	0.02	0.22
12"	0.21	0.43	0.02	0.22
14"	0.19	0.41	0.02	0.21
16"	0.15	0.49	0.02	0.34
18"	0.12	0.34	0.02	0.22
20"	0.08	0.37	0.02	0.29
24"	0.06	0.31	0.02	0.24
30"	0.06	0.28	0.02	0.23
36"	0.06	0.29	0.02	0.24

1 psi = 27.72" water = 0.069 bar

SERIES "T" "F" "L" CALCULATED HEAD LOSS CHART

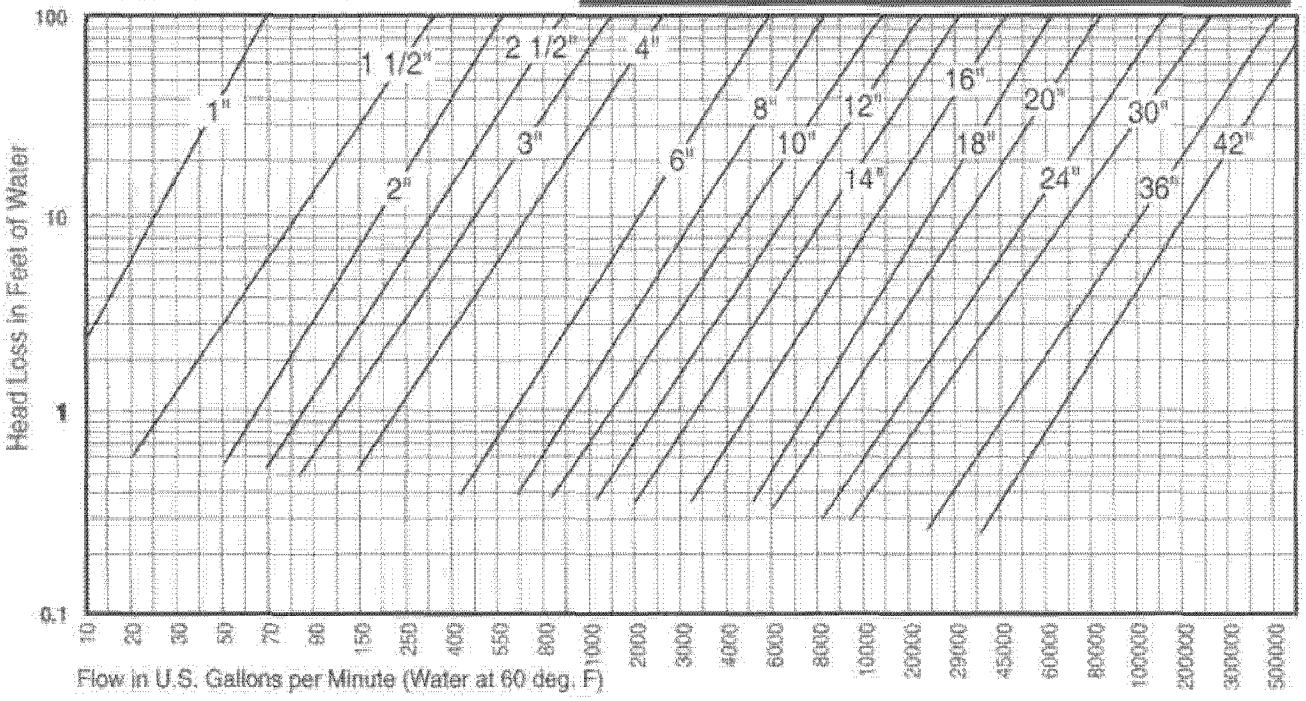

NOTE: CALCULATED DATA Actual results may vary depending on individual piping systems.

HY-GRADE VALVE, INC.
16250 Greeno Road (36532) P.O. Box 388 ▪ Fairhope, AL 36533
Phone: (334)928-1992 ▪ Fax: (334)928-3444 ▪ Internet:WWW.HY-GRADE.COM

HY-GRADE Valve, Inc.

P.O. Box 1376, Point Clear, AL 36564 (USA)
(251) 928-1992 FAX (251) 928-3444

Operating and Installation Instructions

Operating Instructions:

* HY-GRADE Wafer check valves are designed to operate within the pressure and temperature ratings established by ANSI B16.34.

Installation Instructions:

* The check valve must be centered between (2) pipe flanges.

* The check valve is always to be installed with the "flow arrow" pointed in the direction of the pipeline flow.

* The check valve can operate in the vertical up or horizontal position. When operated in the horizontal position, please note that the check valve should be installed so that the word "TOP" is showing on the vertical top.

* The disc should not open into a downstream valve (i.e. butterfly valve)

* To insure maximum performance, the check valve should not open into downstream tees or elbows.

Document Number: IM-01
Revision #: 01