Corrosion Report

Chevron

Equipment Location ID C-1100
Equip. Location Descrip. ATMOSPHERIC COLUMN

Remaining Life (Years) 6.13
Retirement Date 12/21/2017
Last Inspection Date 11/05/2011
Next Inspection Date 11/28/2014
Current Corrosion Rate 24.19

DP ID	MEAS METH	DP STAT	DP SZ	DT TYPE	BASE	MEAS 5	MEAS 4	MEAS 3	NEAR	LAST	MIN VALUE	CCR	REM LIFE
001	UT	A		TOPH	1.270 02/02				1.370 06/06	1.380 11/11	0.500	0.00	∞
002	UT	A		SHELL	0.688 07/76				0.670 02/07	0.670 11/11	0.438	0.51	455.80
003	UT	A		SHELL	0.625 07/76			0.610 02/02	0.620 02/07	0.640 11/11	0.438	0.00	∞
004	UT	A		CONSECTION	0.760 10/88		0.720 10/95	0.770 02/02	0.770 02/07	0.680 11/11	0.563	19.09	6.13
005	UT	A		SHELL	0.688 07/76	0.760 10/88	0.750 10/95	0.700 02/02	0.710 02/07	0.680 11/11	0.500	6.36	28.29
006	UT	A		SHELL	1.000 10/88			1.010 10/95	0.990 02/07	0.970 11/11	0.813	4.24	37.01
007	UT	A		SHELL	1.270 10/88			1.230 10/95	1.280 02/07	1.240 11/11	1.150	8.48	10.61
008	UT	A		SHELL	1.600 11/11						1.400	2.00	100.00
009	UT	A		SHELL	1.813 07/76				1.740 03/07	1.740 11/11	1.713	2.07	13.07
010	UT	A		BOHEAD	1.781 07/76	1.790 10/88	1.870 10/95	1.850 02/02	1.890 03/07	1.930 11/11	1.681	0.00	∞
M01	UT	A	24.00	NOZ	0.680 10/88			0.680 10/95	0.630 02/02	0.630 11/11	0.220	2.17	189.29
M02	UT	A	24.00	NOZ	1.040 10/88		1.060 10/95	1.010 02/02	1.020 02/07	1.020 11/11	0.220	0.87	923.79
M03	UT	A	24.00	NOZ	0.680 10/88			0.680 10/95	0.690 02/02	0.680 11/11	0.220	1.03	448.78
M04	UT	A	24.00	NOZ	0.580 10/88			0.580 10/95	0.580 02/02	0.580 11/11	0.220	0.00	∞
M05	UT	A	24.00	NOZ	0.570 10/88			0.570 10/95	0.560 02/02	0.570 11/11	0.220	0.00	∞
M06	UT	A	24.00	NOZ	0.570 10/88			0.570 10/95	0.560 02/02	0.560 11/11	0.220	0.43	785.22
N01A	UT	A	16.00	NOZ	0.560 05/06				0.560 06/06	0.520 11/11	0.329	7.44	25.69
N01B	UT	A	16.00	NOZ	0.560 06/06					0.510 11/11	0.329	9.29	19.48
N02	UT	A	8.00	NOZ	0.680 10/88			0.680 10/95	0.740 02/02	0.770 11/11	0.282	0.00	∞
N03	UT	A	14.00	NOZ	0.920 10/88			0.920 10/95	0.790 02/02	0.770 11/11	0.329	6.50	67.87
N04	UT	A	10.00	NOZ	0.530 10/88			0.550 10/95	0.530 02/02	0.540 11/11	0.320	0.00	∞
N05A	UT	A	12.00	NOZ	0.680 10/88		0.670 10/95	0.670 02/02	0.670 02/07	0.680 11/11	0.329	0.00	∞
N05B	UT	A	12.00	NOZ	0.700 10/88		0.680 10/95	0.650 02/02	0.660 02/07	0.670 11/11	0.329	1.30	262.31
N06A	UT	A	10.00	NOZ	0.580 10/88		0.560 10/95	0.560 02/02	0.540 02/07	0.520 11/11	0.320	4.24	47.15

©2009 Chevron Corporation

Corrosion Report

Chevron

Equipment Location ID C-1100
Equip. Location Descrip. ATMOSPHERIC COLUMN

Remaining Life (Years) 6.13
Retirement Date 12/21/2017
Last Inspection Date 11/05/2011
Next Inspection Date 11/28/2014
Current Corrosion Rate 24.19

DP ID	MEAS METH	DP STAT	DP SZ	DT TYPE	BASE	MEAS 5	MEAS 4	MEAS 3	NEAR	LAST	MIN VALUE	CCR	REM LIFE
N06B	UT	A	10.00	NOZ	0.580 10/88		0.560 10/95	0.550 02/02	0.540 02/07	0.520 11/11	0.320	4.24	47.15
N07	UT	A	24.00	NOZ	0.700 10/88			0.720 10/95	0.700 02/02	0.710 11/11	0.501	0.00	∞
N08	UT	A	10.00	NOZ	0.680 10/88			0.680 10/95	0.670 02/06	0.620 11/11	0.320	8.75	34.30
N09	UT	A	8.00	NOZ	0.600 10/88				0.620 02/06	0.570 11/11	0.282	8.75	32.93
N10	UT	A	12.00	NOZ	0.680 10/88				0.650 05/09	0.720 11/11	0.329	0.00	∞
N11A	UT	A	8.00	NOZ	0.580 10/88			0.570 10/95	0.570 02/02	0.570 11/11	0.282	0.43	665.13
N11B	UT	A	8.00	NOZ	0.600 10/88			0.590 10/95	0.580 02/02	0.570 11/11	0.282	1.30	221.54
N12	UT	A	20.00	NOZ	0.580 10/88			0.580 10/95	0.590 05/09	0.550 11/11	0.407	16.13	8.87
N13	UT	A	14.00	NOZ	0.680 10/88			0.700 10/95	0.690 02/02	0.610 11/11	0.329	8.20	34.26
N14	UT	A	12.00	NOZ	0.690 05/09					0.680 11/11	0.329	4.03	87.08
N15	UT	A	6.00	NOZ	0.620 05/09					0.560 11/11	0.245	24.19	13.02
N16	UT	A	32.00	NOZ	0.440 05/09					0.440 11/11	0.329	0.00	∞
N17	UT	A	10.00	NOZ	0.720 05/09					0.690 11/11	0.320	12.15	30.46
N18	UT	A	4.00	NOZ	0.590 05/09					0.600 11/11	0.208	0.00	∞
N19A	UT	A	8.00	NOZ	0.580 05/09					0.550 11/11	0.282	12.09	22.16
N19B	UT	A	8.00	NOZ	0.600 05/09					0.590 11/11	0.282	4.03	76.41
N20	UT	A	16.00	NOZ	0.670 11/11						0.329	2.00	170.50
N21	UT	A	6.00	NOZ	0.700 02/06					0.670 11/11	0.245	5.25	80.98
N22A	UT	A	2.00	NOZ	0.690 05/09					0.680 11/11	0.135	4.03	135.20
N22B	UT	A	2.00	NOZ	0.720 05/09					0.700 11/11	0.135	8.06	70.07
N23	UT	A	2.00	NOZ	0.660 03/07					0.660 11/11	0.135	0.00	∞
N24	UT	A	2.00	NOZ	0.670 05/09					0.650 11/11	0.135	8.06	63.87
N25	UT	A	2.00	NOZ	0.670 03/07					0.660 11/11	0.135	2.14	245.79
N27	UT	A	2.00	NOZ	0.640 03/07					0.640 11/11	0.135	0.00	∞

©2009 Chevron Corporation

Corrosion Report

Chevron

Equipment Location ID C-1100
Equip. Location Descrip. ATMOSPHERIC COLUMN

Remaining Life (Years) 6.13
Retirement Date 12/21/2017
Last Inspection Date 11/05/2011
Next Inspection Date 11/28/2014
Current Corrosion Rate 24.19

DP ID	MEAS METH	DP STAT	DP SZ	DT TYPE	BASE	MEAS 5	MEAS 4	MEAS 3	NEAR	LAST	MIN VALUE	CCR	REM LIFE
N29	UT	A	2.00	NOZ	0.700 05/09					0.680 11/11	0.135	8.06	67.59
N31	UT	A	2.00	NOZ	0.680 10/88			0.700 10/95	0.690 02/02	0.640 11/11	0.135	5.13	98.50
N33	UT	A	2.00	NOZ	0.670 03/07					0.660 11/11	0.135	2.14	245.79
N35A	UT	A	2.00	NOZ	0.680 05/09					0.650 11/11	0.135	12.09	42.58
N35B	UT	A	2.00	NOZ	0.670 05/09					0.650 11/11	0.135	8.06	63.87
N36A	UT	A	2.00	NOZ	0.700 05/09					0.680 11/11	0.135	8.06	67.59
N36B	UT	A	2.00	NOZ	0.700 05/09					0.680 11/11	0.135	8.06	67.59
N38	UT	A	2.00	NOZ	0.670 05/09					0.660 11/11	0.135	4.03	130.24
N39	UT	A	2.00	NOZ	0.680 02/06					0.640 11/11	0.135	7.00	72.17
N40	UT	A	2.00	NOZ	0.670 05/09					0.640 11/11	0.135	12.09	41.76
N41	UT	A	2.00	NOZ	0.470 05/09					0.440 11/11	0.135	12.09	25.22
N42	UT	A	2.00	NOZ	0.630 05/09					0.680 11/11	0.135	0.00	∞
N43	UT	A	2.00	NOZ	0.710 05/09					0.680 11/11	0.135	12.09	45.06
N44	UT	A	6.00	NOZ	0.470 05/09					0.440 11/11	0.245	12.09	16.12
N45	UT	A	6.00	NOZ	0.460 05/09						0.245	2.00	107.50

©2009 Chevron Corporation

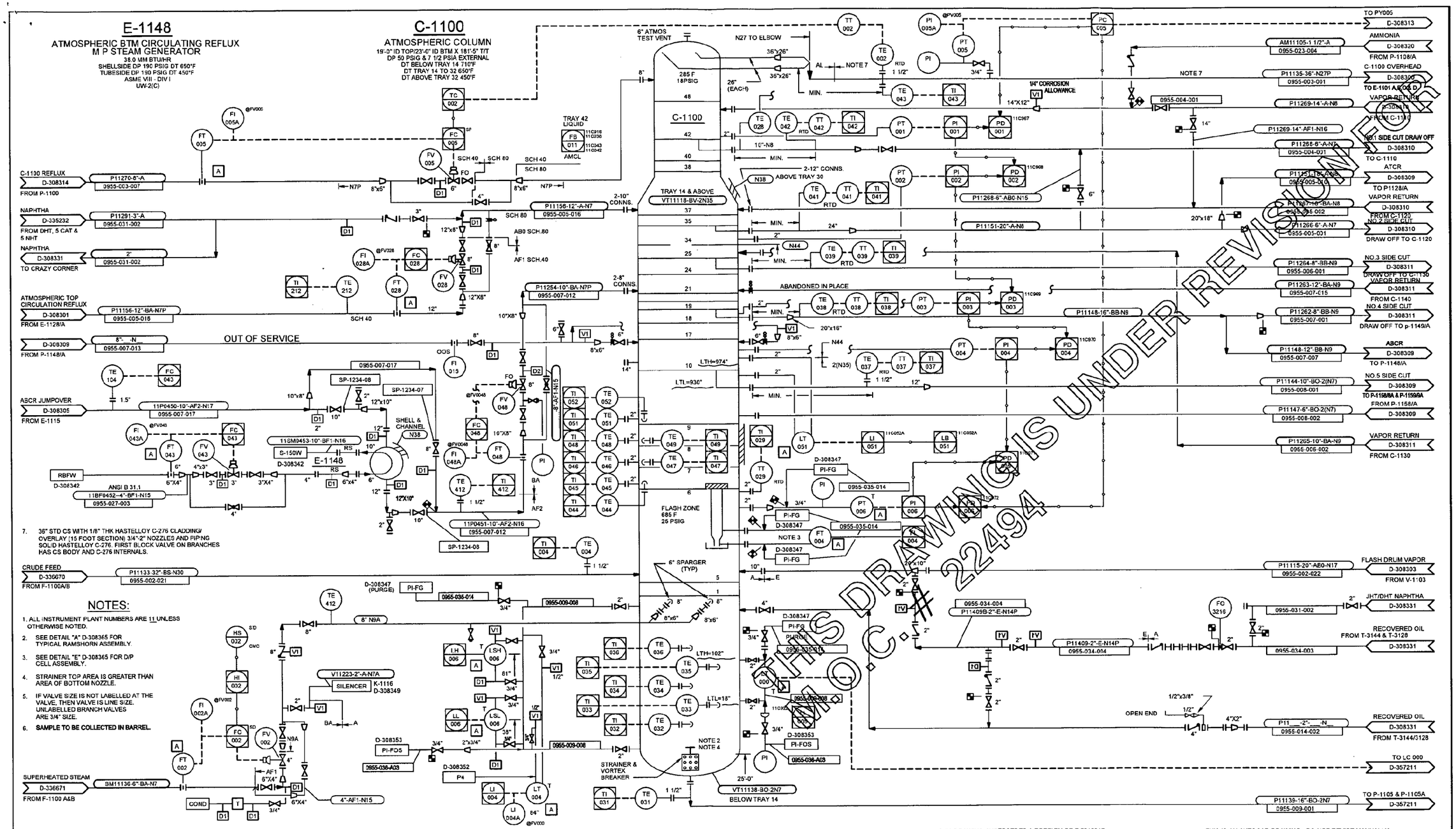
E-1148
ATMOSPHERIC BTM CIRCULATING REFLUX
M P STEAM GENERATOR
38.0 MM BTU/HR
SHELLSIDE DP 190 PSIG DT 650°F
TUBESIDE DP 190 PSIG DT 450°F
ASME VIII - DIV I
UW-2(C)
C-1100
ATMOSPHERIC COLUMN
19'-0" ID TOP/23'-0" ID BTM X 181'-5" T/T
DP 50 PSIG & 7 1/2 PSIA EXTERNAL
DT BELOW TRAY 14 710°F
DT TRAY 14 TO 32 650°F
DT ABOVE TRAY 32 450°F
C-1100 REFLUX
D-308314
FROM P-1100
NAPHTHA
D-335232
FROM DHT, 5 CAT & 5 NHT
NAPHTHA
D-308331
TO CRAZY CORNER
ATMOSPHERIC TOP CIRCULATION REFLUX
D-308301
FROM E-1128/A
D-308309
FROM P-1148/A
OUT OF SERVICE
ABCR JUMPOVER
D-308305
FROM E-1115
RBFW
D-308342
ANSI B 31.1
CRUDE FEED
D-336670
FROM F-1100A/B
SUPERHEATED STEAM
D-336671
FROM F-1100 A&B
6" ATMOS TEST VENT
N27 TO ELBOW
TRAY 42 LIQUID
AMCL
TRAY 14 & ABOVE
ABOVE TRAY 30
ABANDONED IN PLACE
FLASH ZONE
685 F
25 PSIG
6" SPARGER (TYP)
STRAINER & VORTEX BREAKER
BELOW TRAY 14
14" CORROSION ALLOWANCE
TO PY005
AMMONIA
FROM P-1108/A
C-1100 OVERHEAD
TO E-1101 A & D
VAPOR RETURN
FROM C-1110
NO.1 SIDE CUT DRAW OFF
TO C-1110
ATCR
TO P1128/A
VAPOR RETURN
FROM C-1120
NO.2 SIDE CUT
DRAW OFF TO C-1120
NO.3 SIDE CUT
DRAW OFF TO C-1130
VAPOR RETURN
FROM C-1140
NO.4 SIDE CUT
DRAW OFF TO p-1149/A
ABCR
TO P-1148/A
NO.5 SIDE CUT
TO P-1158/A & P-1159/A
FROM P-1158/A
VAPOR RETURN
FROM C-1130
FLASH DRUM VAPOR
FROM V-1103
JHT/DHT NAPHTHA
RECOVERED OIL
FROM T-3144 & T-3128
RECOVERED OIL
FROM T-3144/3128
TO LC 000
TO P-1105 & P-1105A
7. 36" STD CS WITH 1/8" THK HASTELLOY C-276 CLADDING/ OVERLAY (15 FOOT SECTION) 3/4"-2" NOZZLES AND PIPING SOLID HASTELLOY C-276. FIRST BLOCK VALVE ON BRANCHES HAS CS BODY AND C-276 INTERNALS.
NOTES:
1. ALL INSTRUMENT PLANT NUMBERS ARE 11 UNLESS OTHERWISE NOTED.
2. SEE DETAIL "A" D-308365 FOR TYPICAL RAMSHORN ASSEMBLY.
3. SEE DETAIL "E" D-308365 FOR D/P CELL ASSEMBLY.
4. STRAINER TOP AREA IS GREATER THAN AREA OF BOTTOM NOZZLE.
5. IF VALVE SIZE IS NOT LABELLED AT THE VALVE, THEN VALVE IS LINE SIZE. UNLABELLED BRANCH VALVES ARE 3/4" SIZE.
6. SAMPLE TO BE COLLECTED IN BARREL.
THIS DRAWING SUPERSEDES A PORTION OF F-221231R.
THIS IS AN AUTOCAD DRAWING. DO NOT REVISE MANUALLY.
REFERENCE DRAWINGS
No. 4 CRUDE UNIT P&ID DRAWING INDEX D-308298
PLT 11 P&ID VENT & DRAIN DETAILS D-308292
PLT 11 P&ID INSTRUMENT DETAILS D-308293
PLT 11 P&ID AUX CONN STD DETAILS D-308294
PLT 11 P&ID STD SAMPLE CONNECTIONS D-308295
PLT 11 P&ID STD SAMPLE CONNECTIONS D-308296
PLT 11 P&ID STD SAMPLE CONNECTIONS D-308297
PLT 11 P&ID LINE & EQPMT SYMBOLS D-308290
PLT 11 P&ID LINE & EQPMT SYMBOLS D-308291
REVISIONS
21 4 CRUDE PHA DRAWING MARKUPS "AS BUILT" PER MOC# 22647 11-17-10
22 4Q2011 D&R S/D "AS BUILT" REMOVED E-1178 PER MOC# 23281 & INSTALLED ISOLATION & BYPASS FOR E-1165A/B PER MOC# 23282 FIELD VERIFIED BY Dan Kavanagh 02/06/12
19 CRUDE UNIT RECOVERY EFFORT (CURE) "AS-BUILT" PER MOC# 16841, 16848 & 16774. (P-1105/1105A MOVED TO P&ID D-357211). FIELD VERIFIED BY ConneXsys Engineering 05-16-07
20 1Q2007 D&R S/D "AS BUILT" PER MOC# 15513. MOC# 15433 FIELD VERIFIED BY Jack Silbaugh 02-26-08
Chevron
Richmond Refinery
07/18/2012 REV
SCALE NONE DR. GTC DR. APP. MCR DATE 05-01-92
ENGR. ENGR. DEPT.
OPRG. DEPT. Gary W. Dobbs
APPROVED GWDobbs
A
W.O.
S.O.
PIPING AND INSTRUMENT DIAGRAM
C-1100 ATMOSPHERIC COLUMN,E-1148,P-1105,P-1105A
#4 CRUDE UNIT (PLANT 11)
DISTILLATION AND REFORMING AREA BUSINESS UNIT
D-308308-22
THIS DRAWING IS UNDER REVISION
MOC 22494

C F BRAUN & CO

4800-311-111-ZX

ITEM C-1100R

EQUIPMENT DATA

DATA ON SHELL & HEADS T Nom

SECTION (1)	MATERIAL	I.D	NOM. THK.	~~MIN. THK.~~	LENGTH OF FORM
TOP HEAD	SA-516-70	228"		~~.250~~	2:1 S.E. HEAD w/ 2" S.F.
SHELL (190'-1" TO 206'-3")	SA-516-70	228"	11/16"		16'-2"
SHELL (167'-5" TO 190'-1")	SA-516-70	228"	5/8"		22'-8"
CONE (163'-11" TO 167'-5")	SA-516-70	228"x276"	3/4"		3'-6"
SHELL (143'-8" TO 163'-11")	SA-516-70	276"	11/16"		20'-3"
SHELL (136'-5" TO 143'-8")	SA-516-70	276"	3/4"		7'-3"
SHELL (130'-5" TO 136'-5")	SA-515-70	276"	13/16"	.8125	6'-0"
SHELL (121'-5" TO 130'-5")	SA-515-70	276"	7/8"	.875	9'-0"
SHELL (112'-5" TO 121'-5")	SA-515-70	276"	15/16"	.9375	9'-0"
SHELL (103'-5" TO 112'-5")	SA-515-70	276"	1"	1.00	9'-0"
SHELL (98'-9" TO 103'-5")	SA-515-70	276"	9/16"	1.0625	4'-8"
SHELL (91'-5" TO 98'-9")	"	276"	1 1/16"		7'-4"
SHELL (79'-5" TO 91'-5")	"	276"	1 1/4"		12'-0"
SHELL (73'-5" TO 79'-5")	"	276"	1 3/8"		6'-0"
SHELL (61'-5" TO 73'-5")	SA-516-70 w/	276"	1 3/8"		12'-0"
SHELL (50'-5" TO 61'-5")	410S SS CLAD	276"	1 1/2"		11'-0"
SHELL (44'-5" TO 50'-5")	"	276"	1 5/8"		6'-0"
SHELL (36'-0" TO 44'-5")	"	276"	1 11/16"		8'-5"
SHELL (25'-2" TO 36'-0")	"	276"	1 13/16"		10'-10"
BOTTOM HEAD		276"		1.781"	2:1 S.E. HEAD w/ 2" S.F.

MINIMUM THICKNESS AND CORROSION ALLOWANCE DATA

SECTION (1)	t_m	C	BASIS FOR t_m
TOP HEAD	.500"	1/4"	EXTERNAL DESIGN PRESSURE
SHELL (190'-1" TO 206'-3")	7/16"	1/4"	EXTERNAL DESIGN PRESSURE
SHELL (167'-5" TO 190'-1")	7/16"	3/16"	EXTERNAL DESIGN PRESSURE
CONE (163'-11" TO 167'-5")	9/16"	3/16"	INTERNAL DESIGN PRESSURE
SHELL (143'-8" TO 163'-11")	1/2"	3/16"	
SHELL (136'-5" TO 143'-8")	9/16"	3/16"	
SHELL (130'-5" TO 136'-5")	5/8"	3/16"	
SHELL (121'-5" TO 130'-5")	11/16"	3/16"	
SHELL (112'-5" TO 121'-5")	3/4"	3/16"	
SHELL (103'-5" TO 112'-5")	13/16"	3/16"	EXTERNAL DESIGN PRESSURE + SEISMIC DESIGN
SHELL (98'-9" TO 103'-5")	7/8"	3/16"	
SHELL (91'-5" TO 98'-9")	.963"		
SHELL (79'-5" TO 91'-5")	1.150"		
SHELL (73'-5" TO 79'-5")	1.213"	0.1"	
SHELL (61'-5" TO 73'-5")	1.275"	CLAD	
SHELL (50'-5" TO 61'-5")	1.400"		
SHELL (44'-5" TO 50'-5")	1.525"		
SHELL (36'-0" TO 44'-5")	1.588"		
SHELL (25'-2" TO 36'-0")	1.713"		
BOTTOM HEAD	1.681"		

(1) COLUMN IS 181'-5" TAN TO TAN ; ELEVATION REFERENCED HERE ARE BASED ON BOTTOM HEAD SEAM AT 25'-2" AND TOP HEAD SEAM AT 206'-3".

H. J. KRAUS

MAR 22 1976

SHEET 10 OF 32

A 42-2-06-1

N9	O	1.011
	N	1.040
	M	1.049
	L	1.031
	K	1.023
	J	1.042
	I	1.075
	H	1.086
	G	1.067
	F	1.110
	E	1.076
	D	1.003
	C	1.106
	B	1.136
N12	A	1.129

C-1100

Pacific Technical Services	Client: CUSA	Unit: D&R 4 Crude	Technician: Eddie Bouvier
	Equipment: C-1100	Comments: Reading Done by Adam M.	Date: 4-20-11

PTS-0003 REV. 03/07

250

.686

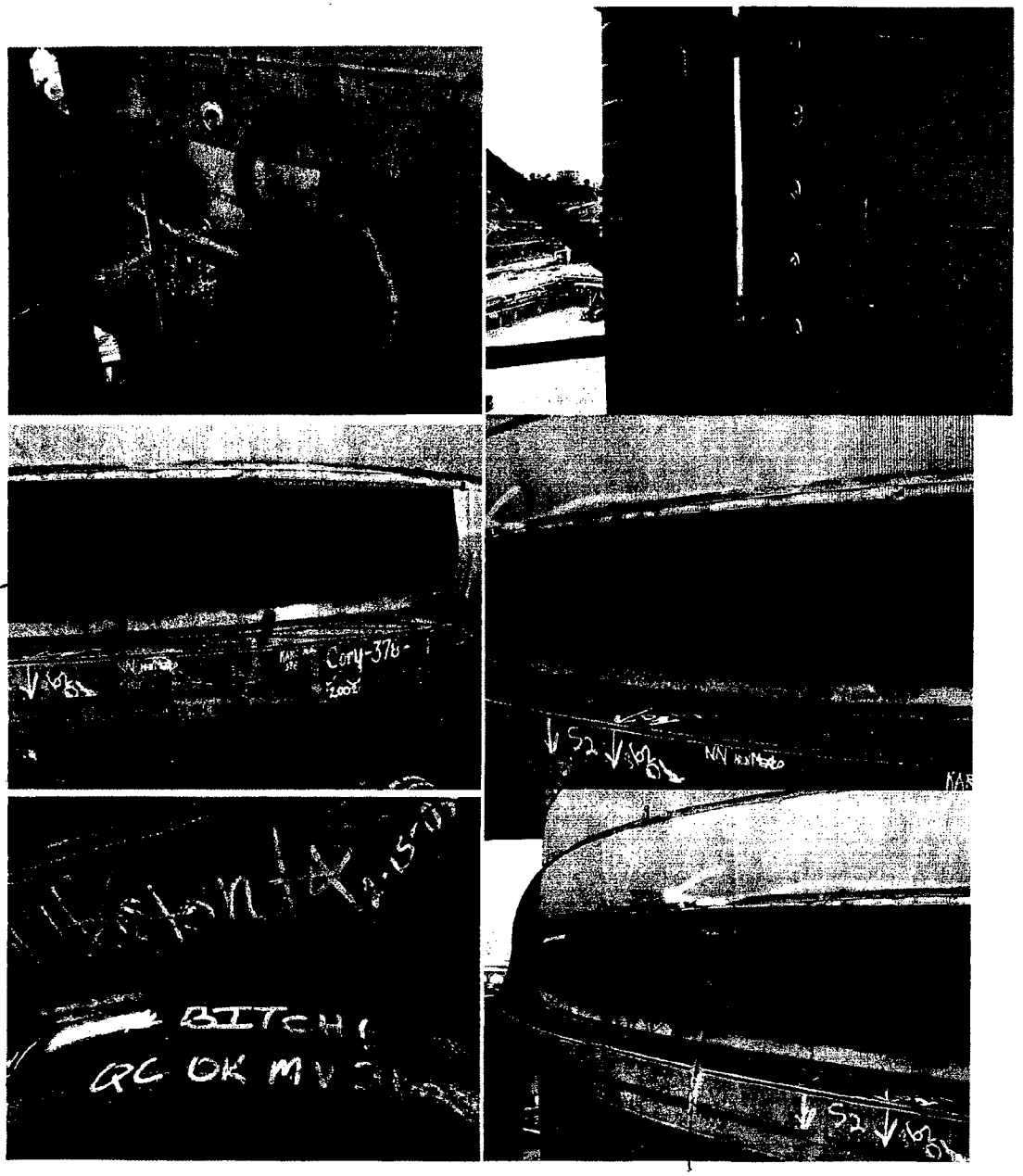

.683

N | .667 | .672 .0624 | W

Readings taken just behind Horns

W | .701 | S

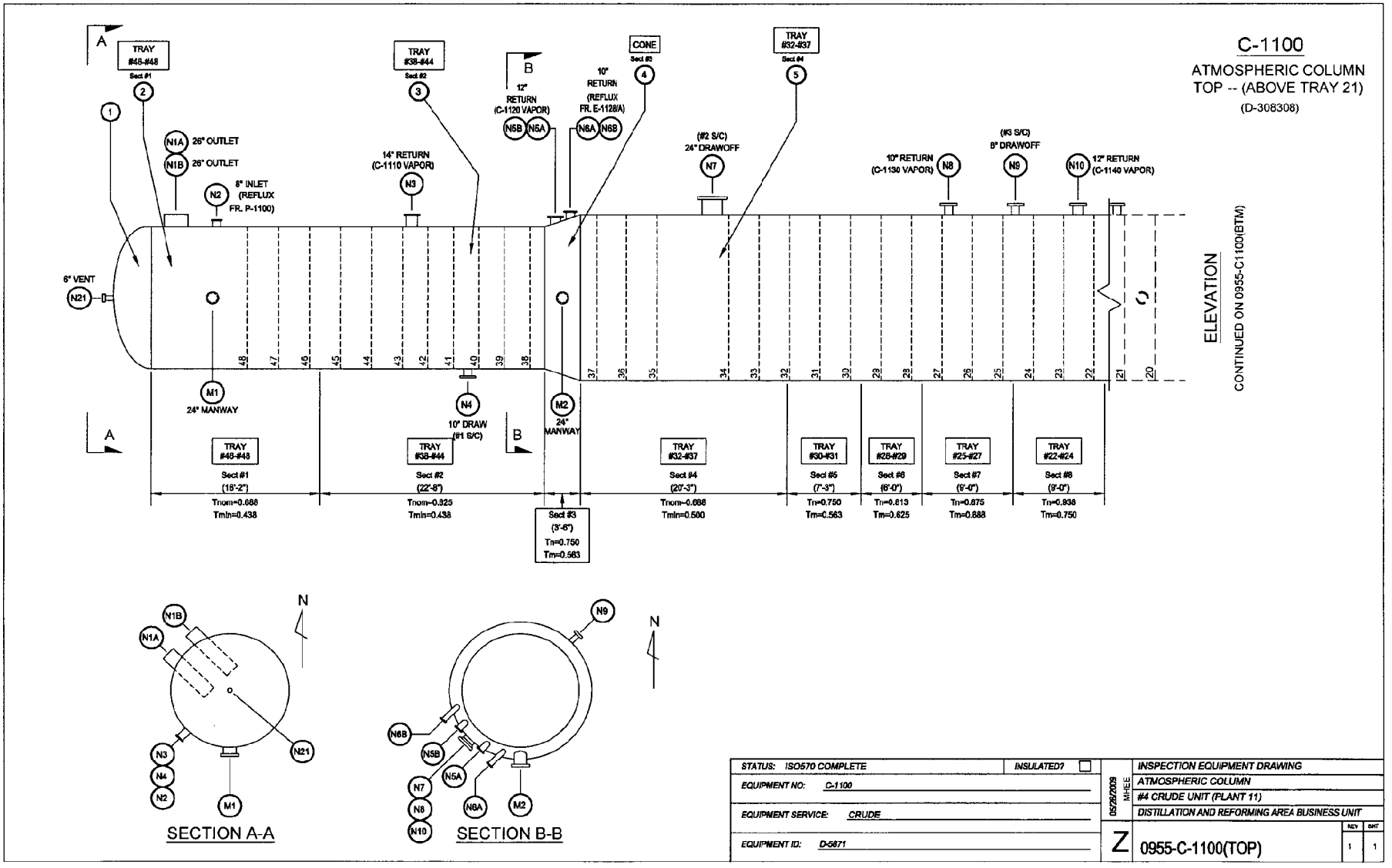
C-1100
ATMOSPHERIC COLUMN
TOP -- (ABOVE TRAY 21)
(D-308308)
ELEVATION
CONTINUED ON 0955-C1100(BTM)
TRAY #48-#48
Sect #1
TRAY #38-#44
Sect #2
CONE
Sect #3
TRAY #32-#37
Sect #4
N1A 26" OUTLET
N1B 26" OUTLET
N2 8" INLET (REFLUX FR. P-1100)
N3 14" RETURN (C-1110 VAPOR)
N5B N5A 12" RETURN (C-1120 VAPOR)
N6A N6B 10" RETURN (REFLUX FR. E-1128/A)
N7 (#2 S/C) 24" DRAWOFF
N8 10" RETURN (C-1130 VAPOR)
N9 (#3 S/C) 8" DRAWOFF
N10 12" RETURN (C-1140 VAPOR)
N21 6" VENT
M1 24" MANWAY
N4 10" DRAW (#1 S/C)
M2 24" MANWAY
TRAY #48-#48
Sect #1
(18'-2")
Tnom=0.688
Tmin=0.438
TRAY #38-#44
Sect #2
(22'-8")
Tnom=0.325
Tmin=0.438
Sect #3
(3'-6")
Tn=0.750
Tm=0.563
TRAY #32-#37
Sect #4
(20'-3")
Tnom=0.688
Tmin=0.500
TRAY #30-#31
Sect #5
(7'-3")
Tn=0.750
Tm=0.563
TRAY #28-#29
Sect #6
(6'-0")
Tn=0.813
Tm=0.625
TRAY #25-#27
Sect #7
(9'-0")
Tn=0.875
Tm=0.688
TRAY #22-#24
Sect #8
(9'-0")
Tn=0.938
Tm=0.750
SECTION A-A
SECTION B-B
N
STATUS: ISO570 COMPLETE
INSULATED? ☐
EQUIPMENT NO: C-1100
EQUIPMENT SERVICE: CRUDE
EQUIPMENT ID: D-5871
05/28/2009
MHEE
INSPECTION EQUIPMENT DRAWING
ATMOSPHERIC COLUMN
#4 CRUDE UNIT (PLANT 11)
DISTILLATION AND REFORMING AREA BUSINESS UNIT
Z
0955-C-1100(TOP)
REV 1
SHT 1

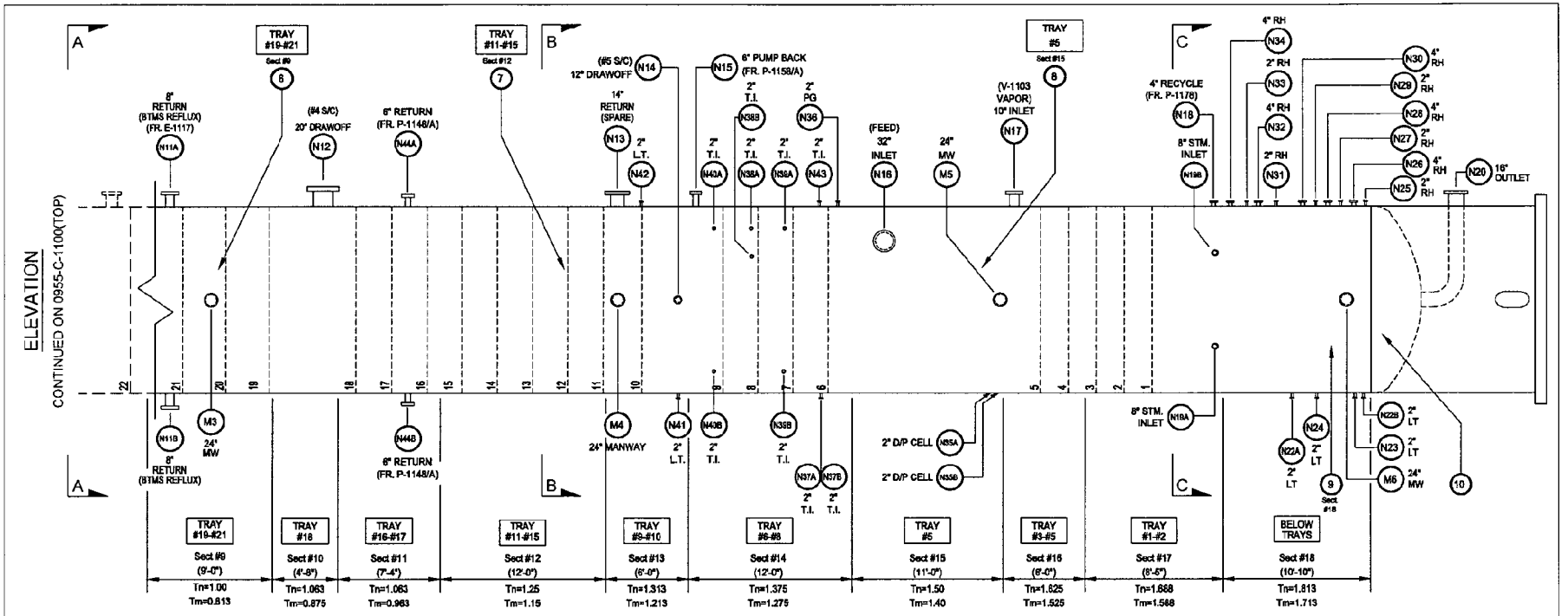

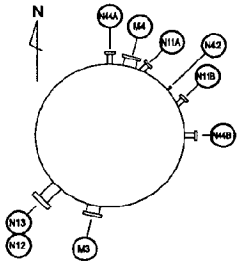

SECTION A-A

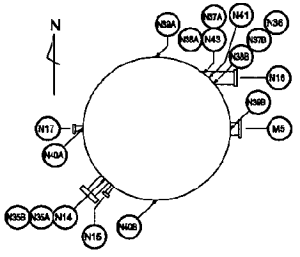

SECTION B-B

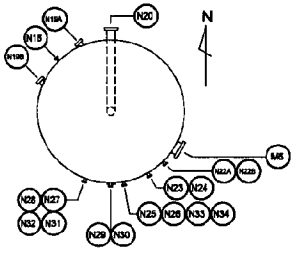

SECTION C-C

C-1100

ATMOSPHERIC COLUMN
BTM -- (BELOW TRAY 22)
(D-308308)

STATUS: ISO570 COMPLETE	INSULATED? [X]	05/26/2009 MHEE	INSPECTION EQUIPMENT DRAWING
EQUIPMENT NO: C-1100			ATMOSPHERIC COLUMN
			#4 CRUDE UNIT (PLANT 11)
EQUIPMENT SERVICE: CRUDE			DISTILLATION AND REFORMING AREA BUSINESS UNIT
EQUIPMENT ID: D-5671		Z	0955-C-1100(BTM) — REV 1, SHT 1

MISTRAS GROUP INC.

Inspection Report, Ultrasonic

Division:	59C	Date:	10/27/2011 Page: of
Address:	3985 Teal Ct Benicia Ca 94510	Job Number:	D+R 4Q-2011 Major
		Purchase Order:	TAW-16072
		Reference Number:	C-1100 Impingement plate
Client:	Chevron USA	Part Number:	C-1100
Address:	100 Chevron Way Richmond Ca	Code/Specification:	ASME SECT II
		Procedure:	100-UT-003 Rev 4
Contact:	John Beaugard	Acceptance Criteria:	CUSTOMER INFO
Location:	4 Crude D+R	Technique:	Digital Thickness

Inspection Method				
	☐ Immersion	☒ Contact	☐ Thru-Transmission	☒ Thickness Measure
	☒ Longitudinal	☐ Shear-wave (Angle:)		
	☐ C-scan	☒ A-scan	☐ B-scan	☐ Other:

Instrument		
Model	Serial No.	Cal-Date Date
36 DL+	022376411	5/3/2012

Transducer		
Frequency	Size	Serial No.
5MHz	.312"	721903

Setup Data				
Reflector	Location	Amplitude	Gate Level	
				Cal. Standard: Step wedge .100" - .500"
				Scan Equipment:
				Couplant: Sono-gel

Additional Information:

Test Results	Quantity Inspected:	Quantity Accepted:	Quantity Rejected:

Performed Ultra-sonic Thickness gauging in C-1100 Impingement plate, UT'd an approximately 10" grid on the Impingement plate Starting below the inlet Nozzle all the way to the end plate @ 25'.

See attached drawing for Thickness locos & plate layout.

☒ Attached Documentation:

Technician, Level & Date: LVL I 10/27/11 Dan Sutherland

Customer (sign):

Management Review (sign):

100-FORM-008 Rev. 1.1 (03/12/2009)

This report is not to be construed as a guaranty or warranty of the condition of the materials tested. Mistras Group is not liable for any misinterpretation of results or conditions, or for any claims or losses attributable to performance of a test. These services are rendered without any warranty. Any liability is limited to the amount paid for the services at issue.

Field Sketch Pad

C-1100 Impingement Plate
Main way #2

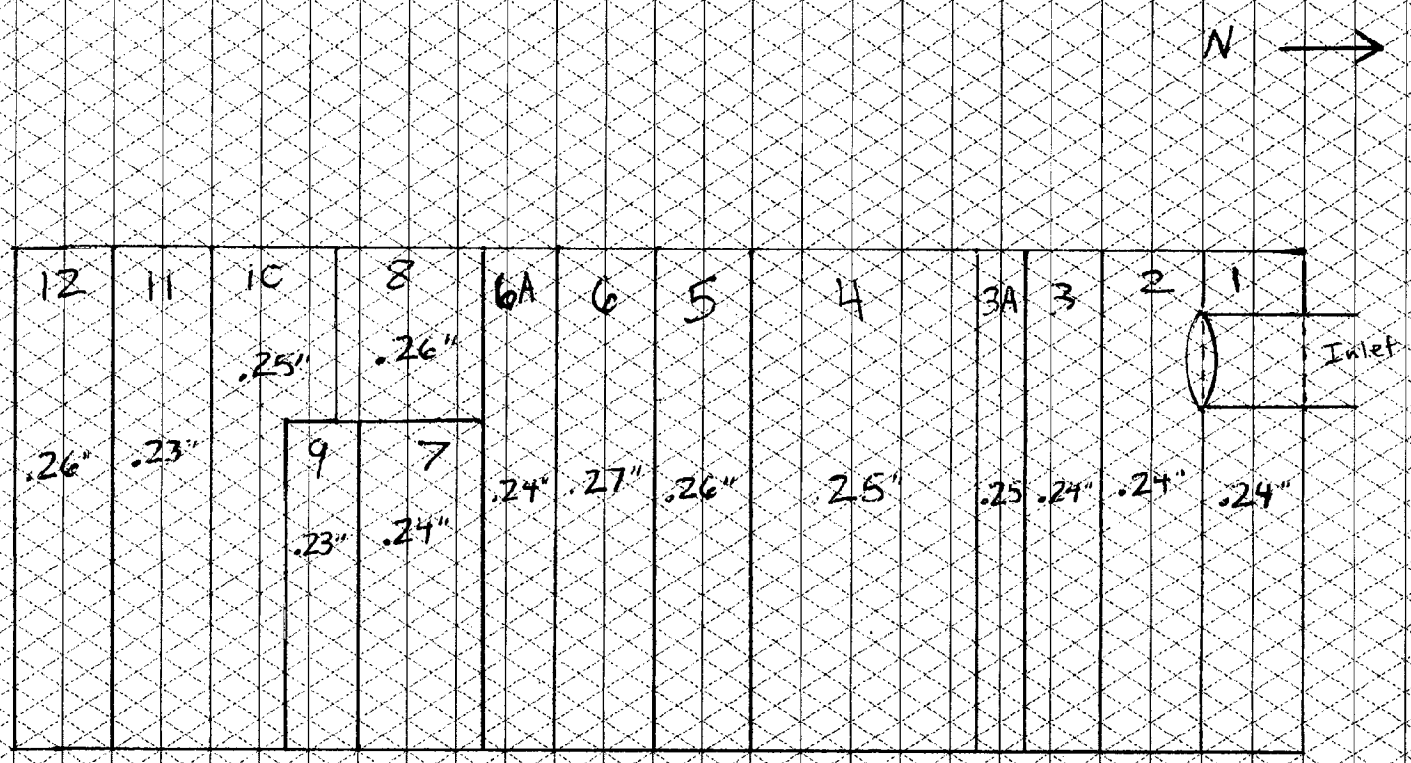

Client: Chevron Richmond	MISTRAS A World of NDT Solutions Services Division	Location: D+R East
Equipment No.: C-1100	3986 Teal Court Benicia, CA 94510 Phone: 707-746-5870 Fax: 707-746-8664 www.mistrasgroup.com	Date: 10/27/2011
Title: Impingement Plate		Job Number: TAW 16072
Unit: 4 Crude		Drawn By: Dan Sutherland

01/25/10

Form 590-ISO-001

MISTRAS GROUP INC.

Inspection Report, Ultrasonic

Division:	590	Date:	10/31/2011 Page: 1 of 2
Address:	3985 Teal Ct Benicia Ca 94510	Job Number:	DTR 4Q-2011 Major S/D
		Purchase Order:	
		Reference Number:	C-1100
Client:	Chevron USA	Part Number:	#2 S/C Sump tray 34
Address:	100 Chevron Way Richmond Ca	Code/Specification:	ASME SECT II
		Procedure:	100-UT-003 Rev 4
Contact:	John Beauregard	Acceptance Criteria:	Customer Info
Location:	C-1100	Technique:	Digital thickness

Inspection Method				
	☐ Immersion	☒ Contact	☐ Thru-Transmission	☒ Thickness Measure
	☒ Longitudinal	☐ Shear-wave (Angle:)		
	☐ C-scan	☒ A-scan	☐ B-scan	☐ Other:

Instrument		
Model	Serial No.	Cal. Due Date
36 DL+	022376411	5/3/2012

Transducer		
Frequency	Size	Serial No.
5MHz	.312"	721903

Setup Data				
Reflector	Location	Amplitude	Gate Level	
				Cal. Standard: .100-.500" step wedge
				Scan Equipment:
				Couplant: Sono-gel

Additional Information:

Test Results	Quantity Inspected:	Quantity Accepted:	Quantity Rejected:

Performed Ultra-Sonic Thickness gauging on the inside of C-1100, the #2 side cut Sump located on the 34th tray of C-1100.

See attached drawing for thickness measurements & locations

☒ Attached Documentation:

Technician, Level & Date: LVL I 10/31/11 Customer (sign): Management Review (sign):

Dan Sutherland

100-FORM-008 Rev. 1.1 (03/12/2009)

This report is not to be construed as a guaranty or warranty of the condition of the materials tested. Mistras Group is not liable for any misinterpretation of results or conditions, or for any claims or losses attributable to performance of a test. These services are rendered without any warranty. Any liability is limited to the amount paid for the services at issue.
All orders are subject to Mistras Standard Terms and Conditions of Sale, which are available upon request

Field Sketch Pad

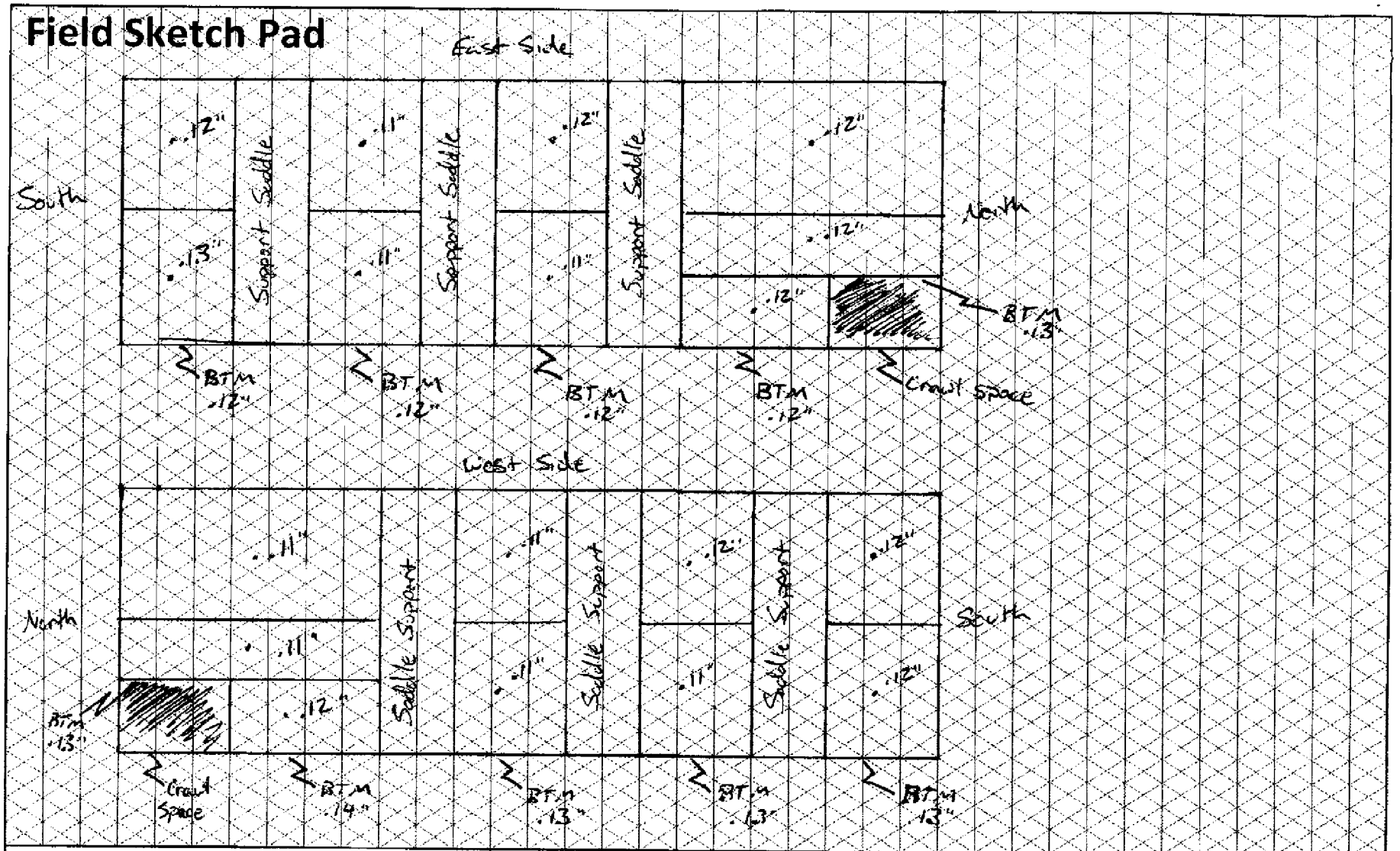

Client: Chevron Richmond	MISTRAS A World of NDT Solutions Services Division	Location: D+R East
Equipment No.: C-1100	3986 Teal Court Benicia, CA 94510 Phone: 707-746-5870 Fax: 707-746-8664 www.mistrasgroup.com	Date: 10-31-2011
Title: #2 Sidecut Sump, Tray 34		Job Number: D+R East 2001 Major S/D
Unit: 4 Crude		Drawn By: Dan Sutherland

01/25/10

Form 590-ISO-001

251 - Columns Worklist

Chevron

Report Date: March 09, 2011 | Data Source: Meridium

IDENTIFICATION

Worklist ID:	WL-0710184196		
Equip. Location:	C-1100: ATMOSPHERIC COLUMN	**Asset ID:**	D-5871
Unit:	0955: 4 CRUDE UNIT PLT 11	**Activity ID:**	2011 D&R Major S/D
Date Created:	08/26/2005	**Date Modified:**	08/26/2005
MFR:	80101969	**MFR Model No:**	23X19X213FT.1-1/2IN.
MFR Serial No:	48146A5742	**Asset Type:**	251 - 251 - Columns

GENERAL

	Available During Run?	
	Bill of Material	
	Recertify	

Comments:

* Bottom nine (per U-1 form) shell sections plus bottom head: SA-516-70 with 0.10" min 410SS cladding (to top of tray 18) - 23' in diameter
* Top shell sections plus top head: SA-516-70 - 23' to 19' in diameter

NOTE: Top head and shell section requires staging to inspect. Center transistion or conical section requires staging.

INTERNAL

			Denied Signature
X	Open Internal Manways	per maintenance instruction	
	Clean Internally	Per PED/Insp recommendation	
	Trays	Recommend Rpr / rplc per PED / DED / Insp reco as reqd; Tray 48 replaced with Monel in 2007 need to inspect. Trays 26-30 are carbon steel and should be 410 SS, needto throughly gage if left in forr another run.	
	Weld Overlay	Inspect clad/non-clad interface for corrosion. UT for seperation of cladding to base metal. Recomendation to continue 410 SS overlay from tray 18 to tray 30 to protect against sulfidation and reduce iron sulfide scale build up in lower draw trays	
	Packing		
	Bubble Caps		
	Strip Lining	Perform visual and PT inspection of welds to determine condition.	
	Demister Pad		
	Hydrotest Shell	Hydrotest Shell at 75 psig at MPT of 65 deg. F per Inspection	
	Staging Required	To inspect top part of shell and top head and at the transition section about 12' between trays	
X	Repair Gasket Surface	Per inspection recommendation	
	Additional Instruction		
X	Additional Instruction	recommendation below for contingency planning	

Note:

© 2005 Chevron Corporation | Technical Owner: Meridium IT Support | Company Confidential

CUSA-CSB-0019657
EPA

API-510 internal inspection due in 3/2017.

Temperature profile of the column provides information that we have carbon steel in areas that require 410 SS overlay. The column has 410 SS lining from the bottom head up to the top of tray 18. This 410SS protective material should extend to tray 30 where the temperture reduces below the sulfidation curve. Tray 25 at the number 3 S/C ti 039 registeres 540 degrees. this area is currently carbon steel. Trays 1-25 are 410 SS and trays 30-35 are 410 SS. Trays 26-30 are carbon steel and should be upgraded to 410 SS. Trays 47 an 48 were replaced in 2007. Tray 48 suffers from HCL corrosion and was upgraded to monel. Tray should be inspected and replaced if necessary

Recommendation for 2011 S/D

1. Clean Per PED/Insp recommendation
2. Recommend Rpr / rplc per PED / DED / Insp reco as reqd; Tray 48 replaced with Monel in 2007 need to inspect. Trays 26-30 are carbon steel and should be 410 SS, need to thoroughly gauge if left in for another run.
3. Inspect clad/non-clad interface for corrosion. UT for separation of cladding to base metal. Recommendation to continue 410 SS overlay from tray 18 to tray 30 to protect against sulfidation and reduce iron sulfide scale build up in lower draw trays
4. Perform visual and PT inspection of welds to determine condition.
5. To inspect top part of shell and top head and at the transition section about 12' between trays
6. Per inspection recommendation
7. Inspect nozzles at the 4 and 5 S/C locations for sulfidation corrosion
8. Replace deformed flash zone impingement plates; use C-1160 design (attachment welds found cracked 1Q07 SD, temporary clips installed to hold in place during next run). (4). Inspect Trays 47 & 48 for NH4Cl Corrosion (1)
9. Ext UT @ top of strip-lining (Tr 18) on outside of column
10. perform external CUI inspection to prepare for any potential weld repairs during the 2011 outage.
11. External CUI inspection performed 12/05 and again in 01/2010, insulation repairs not competed as of 04/aug/2010.

history:

(1) Tray 48 rplcd 1/02 and 1/07 a/c to NH4Cl corr (tray 47 replaced 1Q07 SD), if ovhd line temp nears NH4Cl sublimation point, corr will occur.

(2) Need to strip insulation externally and XUT at tray 18 level for hot H2S corrosion.

(3) During 85/95/02/07 s/d deferred pin-hole weld repairs to the striplining inside transfer line. (Estimate 6-10 pinhole type repairs.)

(4) Impingement plate noted bent out 3-4" during 2/02 s/d, and bent with top welds cracked and portions of welds between the plates cracked during the 1Q07 SD, repairs deferred and clips installed on the plates and bolted to the baffle.

Tray 1-5 active panels replaced during 95 S/D; trays 1-5 and support trusses replaced entirely during 1Q07 SD. (Support trusses were severely bowed and weakened from the 95 repair. The 410 SS beams also suffer from 885 embrittlement, distorted @ previous internal insp.

Top outlet line replaced at H2O injection point (a 15' section Hastelloy C lined) and from the 36" ell directly above the E-1101's to the exchanger inlets (with Hastelloy C overlaid carbon steel) during the 1Q07 SD due to HCl corrosion.

Denied

EXTERNAL

			Signature
X	Open External Manways	per maintenance instruction	
	Staging Required		
X	Repaired Gasket Surface	Per inspection recommendation	
	Additional Instruction	NOTE ON EXTERNAL CLEANING: Ext UT @ top of striplining (Tr 18)	
X	Additional Instruction	recommendations below for contingency planning	

Note:

perform external CUI inspection to prepare for any potential weld repairs during the 2011 outage.

External CUI inspection performed 12/05, insulation repairs not competed as of 04/aug/2010.

© 2005 Chevron Corporation Technical Owner: Meridium IT Support Company Confidential

251 - Columns Worklist

Report Date: March 09, 2011 Data Source: Meridium

© 2005 Chevron Corporation Technical Owner: Meridium IT Support Company Confidential

CUSA-CSB-0019659
EPA