# Corrosion Report

Chevron

| | | | |
|---|---|---|---|
| **Equipment Location ID** | 0955-027-003 | **Remaining Life (Years)** | 46.00 |
| **Equip. Location Descrip.** | HOT BFW TO P-1177/A, E-1148 E-1178 | **Retirement Date** | 03/30/2055 |
| | | **Last Inspection Date** | 04/07/2009 |
| | | **Next Inspection Date** | 03/30/2019 |
| | | **Current Corrosion Rate** | 5.00 |

| DP ID | MEAS METH | DP STAT | DP SZ | DT TYPE | BASE | MEAS 5 | MEAS 4 | MEAS 3 | NEAR | LAST | MIN VALUE | CCR | REM LIFE |
|---|---|---|---|---|---|---|---|---|---|---|---|---|---|
| 001.R | RT | A | 6.00 | ELL | 0.260<br>11/96 | | | | | 0.290<br>04/09 | 0.140 | 0.00 | ∞ |
| 002.R | RT | A | 6.00 | ELL | 0.280<br>11/96 | | | | | 0.290<br>03/09 | 0.140 | 0.00 | ∞ |
| 003.R | RT | A | 1.50 | ELL | 0.200<br>11/96 | | | | 0.200<br>11/03 | 0.240<br>04/09 | 0.100 | 0.00 | ∞ |
| 004.1 | UT | A | 4.00 | ELL | 0.330<br>03/09 | | | | | | 0.100 | 5.00 | 46.00 |
| 004.2I | UT | A | 4.00 | ELL | 0.330<br>03/09 | | | | | | 0.100 | 5.00 | 46.00 |
| 004.2O | UT | A | 4.00 | ELL | 0.330<br>03/09 | | | | | | 0.100 | 5.00 | 46.00 |
| 004.3 | UT | A | 4.00 | ELL | 0.330<br>03/09 | | | | | | 0.100 | 5.00 | 46.00 |


©2009 Chevron Corporation
Company Confidential

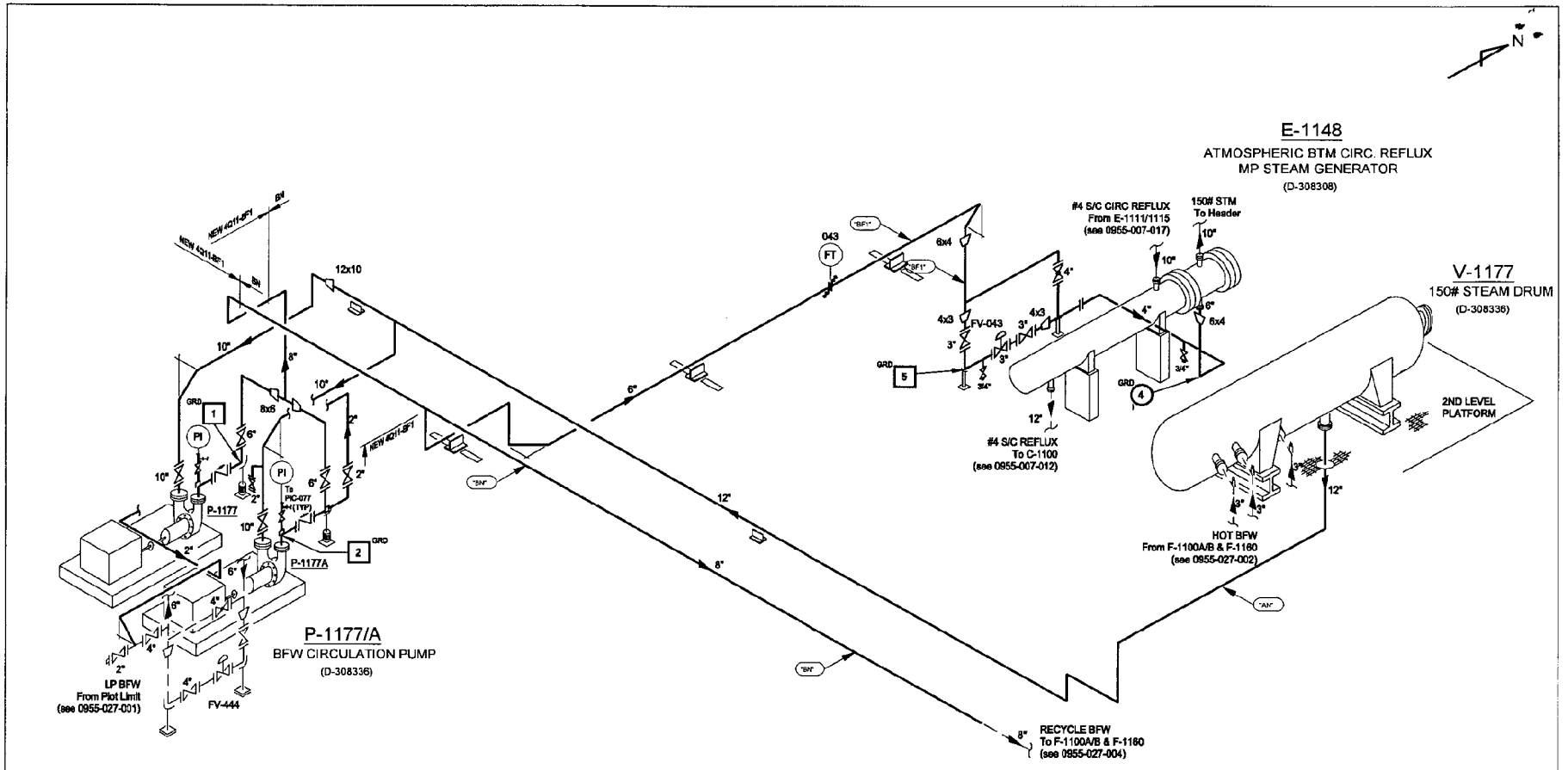


RECYCLE BFW TO P-1177/A & E-1148

| REVISION | | | |
|---|---|---|---|
| 5 | 4C2011 D&R S/D "AS BUILT" INSTALLED E-1105A/B & REMOVED E-1178 PER MOC# 23281,23282. FIELD VERIFIED BY Dan Kavanagh 02/06/2012 | KAVD | DNMR |
| | | TPVA | SIPR |

| | | | |
|---|---|---|---|
| STATUS: ISO570 COMPLETE | RATING? ☐ 150# ☒ 300# | API-570 ☐ CLASS I | 06/29/2012 TT MW |
| MATERIAL: C.S. / SERVICE: LPBFW | STM TRACED? ☐ | ☐ CLASS II | |
| PIPE CLASS: "BB1"(AN),"BF1"(BN) / PWHT: NO | INSULATED? ☒ | ☒ CLASS III | |
| LINE NAME: RECYCLE BFW TO P-1177/A & E-1148 | | | |
| FROM: V-1177 | | | |
| TO: P-1177/A & E-1148 | | | |

INSPECTION PIPING ISOMETRIC
#27 LP BOILER FEED WATER
#4 CRUDE UNIT (PLANT 11)
DISTILLATION AND REFORMING AREA BUSINESS UNIT

Z 0955-027-003 REV 5 SHT 1

# History Brief

## For Location ID: 0955-027-003 in Unit: 0955

Report Date: August 15, 2012 Data Source: Meridium

### Brief Data:

| | | | |
|---|---|---|---|
| **Date Not Available:** | 11/20/2011 | **Date Available:** | 11/20/2011 |
| **History Brief Date:** | 07/24/2012 | **History Brief ID:** | VI-1207261377 |
| **Event Type:** | Inspection | **In- Service Date:** | 11/20/2011 |
| **Equipment ID:** | 0955-027-003 | **Critical:** | L |
| **Asset ID:** | 0000110613 | **Reference Material:** | |
| **Work Order Nbr:** | | **Incident Event ID:** | |
| **History Type:** | FXD | **Inspection Date:** | 07/24/2012 |
| **Asset Type:** | 221 | **Inspection Type:** | EVI |
| **Cost Center:** | K.DCRRI00281 | | |
| **Unit:** | 0955 - 4 CRUDE UNIT PLT 11 | | |
| **Headline:** | API 579 fire assessment_regasketing and stud replacement | | |

### Reliability Analysis:

| | | | |
|---|---|---|---|
| **Event Type:** | Inspection | **Worked Performed By:** | Chevron Reliability |
| **Cause Category:** | Information | **Program Status:** | |
| **Effect Category:** | Information | **Maintainable Item:** | Pipe Wall |
| **Repair Location:** | | **Permanent Repair WO:** | |
| **Temporary Repair:** | | **Name:** | TBEA |
| **Save:** | | **Inspected By:** | TBEA |

### Findings:

| | |
|---|---|
| **PCA ID:** | **Condition:** |
| **Inspectable:** | **Action:** |
| **Sub Item:** | **Location:** |
| **Part:** | **Damage Mechanism:** |
| **Discussion:** | **PCA Work Order No :** |

### Reliability Comments:

0955-015-015
Crude unit 2011 fire assessment
Piping:
Summary: Piping circuit was found to be in zone 5 according to the API 579 fire assessment chart in some areas determined by the melted insulation jacketing. A visual inspection was performed and Brinell hardness testing to ensure no damage from the fire was incurred. Replaced 8 inch and 2 inch gate valves along with gaskets following API 579 guidance.

1. FOUNDATION/SUPPORTS: No issues noted

2. NDE:
A- UT
B- Based on CR of 5 MPY inspection due 2014


© 2005 Chevron Corporation Technical Owner: Dan Buegeleisen Company Confidential

# History Brief

## For Location ID: 0955-027-003 in Unit: 0955

Report Date: August 15, 2012 | Data Source: Meridium

### Brief Data:

| | | | |
|---|---|---|---|
| **Date Not Available:** | 10/7/2004 | **Date Available:** | |
| **History Brief Date:** | 10/07/2004 | **History Brief ID:** | EI-0410113449 |
| **Event Type:** | Inspection | **In- Service Date:** | |
| **Equipment ID:** | 0955-027-003 | **Critical:** | L |
| **Asset ID:** | 0000110613 | **Reference Material:** | |
| **Work Order Nbr:** | | **Incident Event ID:** | |
| **History Type:** | FXD | **Inspection Date:** | 10/07/2004 |
| **Asset Type:** | 221 | **Inspection Type:** | EVI |
| **Cost Center:** | K.DCRRI00281 | | |
| **Unit:** | 0955 - 4 CRUDE UNIT PLT 11 | | |
| **Headline:** | Piping Spring Can Sup't Beams Sagging, Reco To Repair | | |

### Reliability Analysis:

| | | | |
|---|---|---|---|
| **Event Type:** | Inspection | **Worked Performed By:** | Chevron - General |
| **Cause Category:** | Compliance, Inspection, PM | **Program Status:** | |
| **Effect Category:** | No Effect | **Maintainable Item:** | General |
| **Repair Location:** | | **Permanent Repair WO:** | |
| **Temporary Repair:** | | **Name:** | JMJG |
| **Save:** | | **Inspected By:** | |

### Reliability Comments:

The inlet piping for P-1177/A (hot BFW from V-1177) is supported by spring cans attached to structural beams, which are in turn attached to baseplates formed into the tops of concrete girders on the northern edge of the crude unit pipe rack. These baseplates were found pulled up from the griders, allowing the piping to sag. A recommendation was written to repair the sagging beams.


© 2005 Chevron Corporation


CUSA-CSB-0019486
EPA

# Corrosion Report

Chevron

| | | | |
|---|---|---|---|
| **Equipment Location ID** | 0955-034-003 | **Remaining Life (Years)** | 26.88 |
| **Equip. Location Descrip.** | RECOVERED OIL TO C-1100 | **Retirement Date** | 02/28/2037 |
| | | **Last Inspection Date** | 04/13/2010 |
| | | **Next Inspection Date** | 08/26/2014 |
| | | **Current Corrosion Rate** | 5.95 |

| DP ID | MEAS METH | DP STAT | DP SZ | DT TYPE | BASE | MEAS 5 | MEAS 4 | MEAS 3 | NEAR | LAST | MIN VALUE | CCR | REM LIFE |
|---|---|---|---|---|---|---|---|---|---|---|---|---|---|
| 002.1 | UT | A | 2.00 | ELL | 0.150 05/88 | | | | | 0.150 08/04 | 0.100 | 0.00 | ∞ |
| 002.2 | UT | A | 2.00 | ELL | 0.150 05/88 | | | | | 0.150 08/04 | 0.100 | 0.00 | ∞ |
| 006.1 | UT | A | 4.00 | ELL | 0.230 03/05 | | | | | 0.230 04/10 | 0.100 | 0.00 | ∞ |
| 006.2I | UT | A | 4.00 | ELL | 0.290 03/05 | | | | | 0.260 04/10 | 0.100 | 5.95 | 26.88 |
| 006.2O | UT | A | 4.00 | ELL | 0.220 03/05 | | | | | 0.230 04/10 | 0.100 | 0.00 | ∞ |
| 006.3 | UT | A | 4.00 | ELL | 0.230 03/05 | | | | | 0.220 04/10 | 0.100 | 1.98 | 60.48 |
| 008.R | RT | A | 2.00 | ELL | 0.150 10/99 | | | | | 0.150 05/05 | 0.100 | 0.00 | ∞ |
| 009.R | RT | A | 2.00 | ELL | 0.150 10/99 | | | | | 0.150 09/04 | 0.100 | 0.00 | ∞ |
| 012.J | UT | A | 4.00 | TEE | 0.380 11/03 | | | | | 0.390 08/09 | 0.100 | 0.00 | ∞ |
| 012.N | UT | A | 4.00 | TEE | 0.280 11/03 | | | | | 0.280 08/09 | 0.100 | 0.00 | ∞ |
| 012.S | UT | A | 4.00 | TEE | 0.280 11/03 | | | | | 0.270 08/09 | 0.100 | 1.75 | 97.09 |
| 013.R | RT | A | 0.75 | NIP | 0.140 11/03 | | | | | 0.160 07/05 | 0.100 | 0.00 | ∞ |


©2009 Chevron Corporation


CUSA-CSB-0019487
EPA

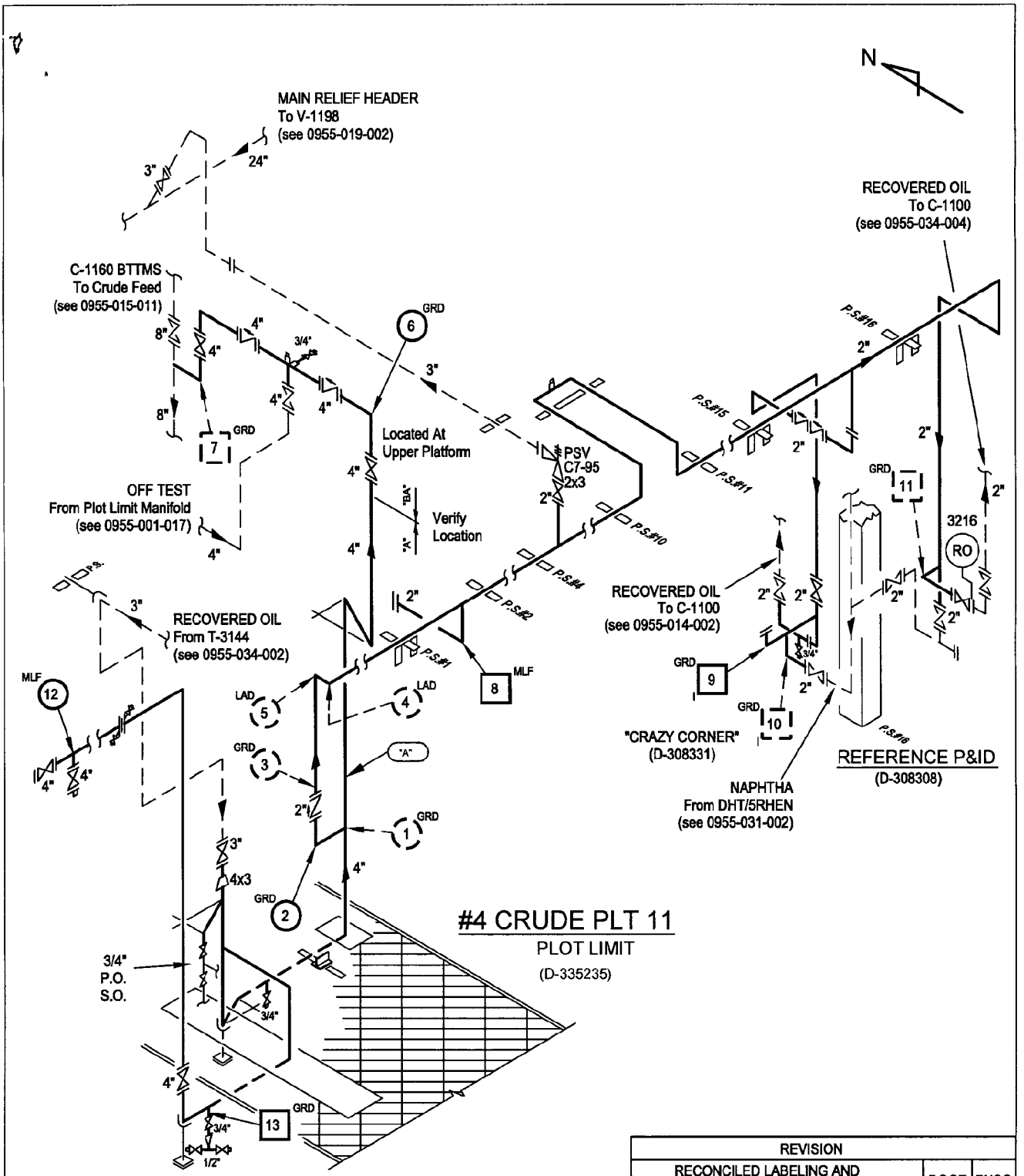


RECOVERED OIL TO C-1100

| REVISION | | |
|---|---|---|
| 5 RECONCILED LABELING AND STANDARDIZED FORMAT FOR PRD/PSV IDENTIFICATION. 05/05/08 | DOGR | PHSC |
| | TPVA | |

| | | | | |
|---|---|---|---|---|
| STATUS: *ISO570 COMPLETE* | RATING? [X] 150# [ ] 300# | API-570 [ ] CLASS I | 07/03/2012 TTMW | *INSPECTION PIPING ISOMETRIC* |
| MATERIAL: *C.S.* SERVICE: *RECOVERED OIL* | STM TRACED? [X] | [X] CLASS II | | *#34 RECOVERED OIL* |
| PIPE CLASS: *"AB0"(A),"AF1"(BA)* PWHT: *NO* | INSULATED? [ ] | [ ] CLASS III | | *#4 CRUDE UNIT (PLANT 11)* |
| | | | | *DISTILLATION AND REFORMING AREA BUSINESS UNIT* |

| | | | |
|---|---|---|---|
| LINE NAME: *RECOVERED OIL TO C-1100* | Z | 0955-034-003 | REV 5 / SHT 1 |
| FROM: *PLOT LIMIT* | | | |
| TO: *"CRAZY CORNER" AT P.S. 16* | | | |

# History Brief

## For Location ID: 0955-034-003 in Unit: 0955

Report Date: August 15, 2012 | Data Source: Meridium

### Brief Data:

| | | | |
|---|---|---|---|
| **Date Not Available:** | 8/28/2007 | **Date Available:** | 08/28/2007 |
| **History Brief Date:** | 08/28/2007 | **History Brief ID:** | VI-0708182385 |
| **Event Type:** | Inspection | **In- Service Date:** | 08/28/2007 |
| **Equipment ID:** | 0955-034-003 | **Critical:** | L |
| **Asset ID:** | 0000110638 | **Reference Material:** | |
| **Work Order Nbr:** | | **Incident Event ID:** | |
| **History Type:** | FXD | **Inspection Date:** | 08/28/2007 |
| **Asset Type:** | 221 | **Inspection Type:** | EVI |
| **Cost Center:** | K.DCRRI00281 | | |
| **Unit:** | 0955 - 4 CRUDE UNIT PLT 11 | | |
| **Headline:** | RFMS CUI Project Inspection Results | | |

### Reliability Analysis:

| | | | |
|---|---|---|---|
| **Event Type:** | Inspection | **Worked Performed By:** | Chevron Reliability |
| **Cause Category:** | Information | **Program Status:** | |
| **Effect Category:** | Corrosion | **Maintainable Item:** | Pipe Wall |
| **Repair Location:** | | **Permanent Repair WO:** | |
| **Temporary Repair:** | | **Name:** | CSAA |
| **Save:** | | **Inspected By:** | CSAA |

### Findings:

| | |
|---|---|
| **PCA ID:** | **Condition:** |
| **Inspectable:** | **Action:** |
| **Sub Item:** | **Location:** |
| **Part:** | **Damage Mechanism:** |
| **Discussion:** | **PCA Work Order No :** |

### Reliability Comments:

Insulation was removed completely for inspection after x-ray detected CUI. Light CUI with a remaining wall thickness of .130 on the 2 inch lines at TML 3 and 9. Superficial CUI on the 4 inch line upstream from TML 13. Circuit was coated and reinsulated at personnel protection locations.


© 2005 Chevron Corporation