SCOPE TRACKING - ADDITIONAL WORK (TAW) - 16167

SDD108A; 4Q2011 4 CRUDE MAJOR-EASTSIDE

Scope Creep Type

- ○ Late (Deliverables supplied late)
- ○ Cancel (cancel existing job after WL Frz)
- ○ TAW Pre-ER Discovery
- ○ Scope Reduction Pre-ER
- ○ Scope Addition Pre-ER
- ◉ TAW Post-ER Discovery
- ○ Scope Reduction Post-ER
- ○ Scope Addition Post-ER
- ○ Work Deferral
- ○ Other (work done outside of TA)

Approval Status

- NEW
- ○ ESTIMATING
- ○ UNDECIDED
- ● APPROVED
- ○ DENY

Date: 10/24/2011 **WO Nbr:** 313079

Remarks:

Originator: MURPHY, PAT (pmgr) RI

Engineering Required: ○ Yes ◉ No

Environmental Review: ○ Yes ◉ No

Risk Assessment? ○ Yes ◉ No

T/A Interval (Mos):

System No:

ER Submission Date:

Equip / Loc: (D) VALVES

Description of work: (Include Options)

BE-102-E1 REVISION 2 / PROCESS VALVE LIST REVISION

ONE VALVE (TAG# GENVLV-25) FROM THE ORIGINAL VALVE LIST CANNOT BE REPAIRED BY BAY VALVE. THIS VALVE IS WELDED IN AND WILL NEED PIPING MODIFICATIONS/WELDING TO INSTALL THE NEW VALVES.

PLEASE SEE THE ATTACHED FOR WORK INSTRUCTIONS. THIS IS A REVISION TO THE EXISTING VALVE LIST.

Justification for this TAW

VALVES CANNOT BE REPAIRED WITHOUT PIPING MODIFICATIONS/WELDING.

Reason work was identified after work list freeze or late: **Work List Freeze Date:**

BAY VALVE ORIGINALLY STATED THAT THEY COULD REPAIR THESE VALVES. HOWEVER AFTER LOOKING AT THE VALVES, THEY STATED THAT THEY THIS VALVES CANNOT BE REPAIRED.

Schedule Status (for use by schedulers):

Current Estimates:		*Summary Info:*	
Labor	$0	ER Contingency:	$0
Material	$0	TAW Estimates at ER Creation:	$1,418,284
Equip.	$0	Current TAW Estimate:	$0
Total:	$0	TAW $ Approved to Date:	$1,418,284
		Remaining Contingency:	($1,418,284)

Effect on Schedule

- [x] None
- [ ] Risk, Miss Planning Milestone
- [ ] Risk, number of non-critical path jobs
- [ ] Potential critical path
- [ ] New critical path
- [ ] Extends Schedule by 0

Planning Notes:

Impacts Budget? ○ Yes ◉ No ◉ Capital ◉ Expense

10/24/2011 8:07:15 PM

SCOPE TRACKING - ADDITIONAL WORK (TAW) - 16167

SDD108A; 4Q2011 4 CRUDE MAJOR-EASTSIDE

Approvals: **Select Added Work Classification and Type To Show Required Approvals...**

	Req?	Core Team Members:	Status	Date:	NOT SUBMITTED
Operations:	Y	CRUZ, ALFRED (acrz) RI	10/25/11		
Technical:	Y	MURPHY, PAT (pmgr) RI	10/24/11		
Inspection:	Y	BEAUREGARD, JOHN (tbea) RI	10/24		
Maint. Core Team Lead:	Y	MASSARO, VINCENT (vrma) RI		10/25/11	
		Management Approvals:			
Impact Team Leader:	Y	GREENFIELD, MATTHEW (mgcv) RI		10/25/11	
TA Superintendent:	N				
Section Head:	N				
Area Business Mgr:	N				
Mgr Of Operations:	N				

Approval Process Comments

CommentDate	Comment	UserEntered
10/24/2011 6:49:30 PM	EWO ATTACHED AND GIVEN TO IMPACT	MURPHY, PAT (pmgr) RI

Entered By: PMGR 10/24/2011 6:17:00 PM Last Updated By: PMGR 10/24/2011 8:07:10 PM

R. RAMIREZ

OCT 25 2011

10/24/2011 8:07:16 PM

1.0 SCOPE

Fifty three valves have been identified as needing replacement or repair. This EWO provides specific work direction for each of these valves.

REV-1 – Changed Drawing SK-5315-37 to refer to the correct valve **GENVLV-42** and removed **GENVLV-007, 014 & 015** and SK-5315-07, 12 & 13 from the EWO. Valves **GENVLV-007, 014 & 015** will be completed per another EWO.

REV-2- Changed Drawing SK-5315-22 to change work instruction to replace **GENVLV-25**.

2.0 GENERAL REQUIREMENTS

All work in this EWO shall be in strict compliance with the following ASME Codes and Richmond Refinery standards:

- ASME Section VIII (latest):_____Pressure Vessel Code
- NBIC (latest):_____National Board Inspection Code
- ASME Section IX (latest):_____Welding and Brazing Qualifications
- ASME Section V (latest):_____Nondestructive Examination
- All piping work in this EWO shall be in compliance with the "Richmond Refinery Metals Craft Manual". The piping Contractor is responsible for complying with these quality assurance procedures.
- Any repair alternatives to the instructions in this EWO shall be reviewed and approved by a Chevron Designs Engineer.

3.0 MATERIALS

- Obtain valves on **Maximo#: 313079, Material Request #130588**
- All other materials to be supplied by Maintenance and/or the Contractor

4.0 WORK INSTRUCTIONS

4.1 Perform work on valves as directed on attached "General Valve Work Detail List". This will provide the following information:

- Valve info (tag #, size, class, style).
- Location within plant (work with attached sketches).
- Work direction (repack, remove/repair, replace, etc.).
- Appropriate Welding Procedure Specifications.
- Hydrostatic Test Pressure Information
- Pipe Class Specifications

4.2 Replace Insulation In Kind

- Where required, insulation shall be removed sufficiently to complete valve work including testing. The insulation shall be replaced to match existing after all valve work and testing is complete.
- Test and Abate Asbestos Insulation as Necessary.

5.0 ATTACHMENTS

	Drawing No	Sheets
General Valve Work Detail List		4 Sheets
Individual Valve Sketches		43 sheets
Piping Class Sheets	1CS11, 1CS12, 1CS13, 1CS23, 3CS11, 3CS13, 3CS24, 3CS33, 3CL11, AB1, AB2, AB4, TF1	31 sheets
Weld Procedures	CVX- 101, 104, 105, 108, 102, 103, 106, 109, 111, 112, 113, 114	See Maintenance Personnel
Chevron Coating System	Data Sheet 3.1, Data sheet 12.1	2 sheets

Think Before You Act!

Marked up Orifice flange detail	Marked up drawing D-601407 for GENVLV-12	1 sheet

Maintain **SAFELY,**
Maintain **SAFETY**.

D&R Distillation

EWO LIST

General Valve Work Detail List

Passport #	313079-001	**Plant:**	4Crude	**Impact Team Leader**	Woolley, Scott J.
EWO #	BE102-E1	**Equipment:**	4Q 11 4CU S/D - G/V LIST	**Impact Supervisor:**	Smith, Bruce D.
MOC #		**Shutdown Info:**	2011 4CU SHUTDOWN	**Maint. Supervisor:**	Mark Paulson
				Ops. Coordinator:	Kenneth C. Sohnrey

Tag Number	Valve				Location	Service	Work	P&ID / ISO #	Pipe Class	Weld Proc	Hydro (psi)
	Size (in.)	Rating	End Conn.	Type							
GENVLV-001	2.0"	300	RF	Gate Valve	V-1190 Sight Glass Top Lead 2" Block Valve	Naphtha	Replace valve (see drawing SK-5315-04)	D-308318/ 0955-017-007	3CS11	N/A	N/A
GENVLV-002	4"	150	RF	Globe Valve	11PV622 F-1160 FG Bypass	Fuel Gas	Replace valve (see sketch SK-5315-05)	D-308335/ 0955-035-015	1CS12	N/A	N/A
GENVLV-003	6"	150	RF	Globe Valve	11PV111 F-1100A FG Bypass	Fuel Gas	Replace valve (see sketch SK-5315-05)	D-308321/ 0955-035-015	1CS12	N/A	N/A
GENVLV-004	6"	150	RF	Globe Valve	11PV211 F-1100B FG Bypass	Fuel Gas	Replace valve (see sketch SK-5315-05)	D-308322/ 0955-035-015	1CS12	N/A	N/A
GENVLV-005	12"	300	RF	Gate Valve	E-1103 Outlet Block Valve	Crude	Replace valve (see sketch SK-5315-06)	D-308301/ 0955-001-007	3CS11	N/A	N/A
GENVLV-006	12"	300	RF	Gate Valve	E-1106 Outlet Block Valve	Crude	Replace valve (see sketch SK-5315-06)	D-308301/ 0955-001-007	3CS11	N/A	N/A
GENVLV-007	3"	150	RF	Orbit Valve	11LV079 BP; K-1171/A Make-up H2O to Loop Seal	Utility Water	Replace Valve Per Piping Modification S/D EWO BE-135-E1	D-308332	1CS11	N/A	N/A
GENVLV-008	4"	300	RF	Gate Valve	11LV052 Upstream Block Valve	Effluent/H2O	Replace valve (see sketch SK-5315-08)	D-308319/ 0955-022-010	3CS33	N/A	N/A
GENVLV-009	4"	300	RF	Gate Valve	11LV052 Downstream Block Valve	Effluent/H2O	Replace valve (see sketch SK-5315-08)	D-308319/ 0955-022-010	3CS33	N/A	N/A
GENVLV-010	10"	300	RF	Gate Valve	E-1111 ABCR B/P	ABCR	Replace valve (see sketch SK-5315-09)	D-308305/ 0955-007-008	3CS24	N/A	N/A
GENVLV-011	8"	150	RF	Gate Valve	V-1160 Off-Gas to K-1171's Block Valve	Off Gas	Replace valve (see sketch SK-5315-10)	D-308331/ 0955-010-010	1CS12	N/A	N/A
GENVLV-012	1/2"	800	SW	Gate Valve	11FI067 1/2" Root Valve Upstream Flange	Off Gas	Replace valve (see sketch SK-5315-10)	D-308331/ 0955-010-010	1CS12	CVX-101, 104, 108	450 psig
GENVLV-013	0.75"	800	Welded	Gate Valve	150# Steam Supply to W/D stations-Street Side F-1100A	150# Steam	Replace valve (see sketch SK-5315-11)	D-308343	1CS13	CVX-101, 104, 108	450 psig
GENVLV-014	16"	300	RF	Gate Valve	E-1107 Crude Inlet Block Valve	Crude	Replace valve per piping modification EWO#BE-127-E1	D-308301 / 0955-001-010	3CS11	N/A	N/A

CUSA-CSB-0018996
EPA

EWO LIST

General Valve Work Detail Lis

Passport # 319243-001	Plant: 4Crude	Impact Team Leader	Woolley, Scott J.
EWO # BE-127-E1	Equipment: 4Q 11 4CU S/D - G/V LIST	Impact Supervisor:	Smith, Bruce D.
MOC #	Shutdown Info:	Maint. Supervisor:	Paulson, Mark N.
		Ops. Coordinator:	Sohnrey, Kenneth C.

Tag Number	Valve Size (in.)	Valve Rating	Valve End Conn.	Valve Type	Location	Service	Work	P&ID / ISO #	Pipe Class	Weld Proc	Hydro (psi)
GENVLV-015	16"	300	RF	Gate Valve	E-1107 Crude Outlet Block Valve	Crude	Replace valve per piping modification EWO#BE-127-E1	D-308301 / 0955-001-011	3CS11	N/A	N/A
GENVLV-016	2.0"	150	RF	Gate Valve	150# Steam to V-1190(clean-up) @ V-1190 stanchion	150# Steam	Replace valve (see sketch SK-5315-14)	D-308318	1CS13	N/A	N/A
GENVLV-017	4"	300	RF	Gate Valve	150# Steam Block Valve to P-1101A Discharge	150# Steam	Replace valve (see sketch SK-5315-15)	D-308300/ 0955-001-002	3CS13	N/A	N/A
GENVLV-018	12"	150	RF	MOV	P-1101A Suction Block Valve ☆ MOV-112	Crude	Replace valve (see sketch SK-5315-16)	D-308300/ 0955-001-001	1CS12	N/A	N/A
GENVLV-019	3"	300	RF	Gate Valve	Wash Oil Block Valve P-1189	Wash Oil	Replace valve (see sketch SK-5315-17)	D-308327/ 0955-025-006	3CS11	N/A	N/A
GENVLV-020	0.75"	800	Welded	Gate Valve	E-1109 7S/C Bleeder Valve	7 S/C	Replace valve (see sketch SK-5315-18)	D-308304/ 0955-012-003	3CS11	CVX-101, 104, 108	1125 psig
GENVLV-021	0.75"	800	Welded	Gate Valve	V-1100 Sample Draw Root Valve	Sour H2O	Replace valve (see sketch SK-5315-19)	D-308314/ 0955-020-005	1CS23	CVX-101, 104, 108	450 psig
GENVLV-022	8"	300	RF	Gate Valve	P-1148A Discharge Block Valve	ABCR	Replace valve (see sketch SK-5315-20)	D-308309/ 0955-007-008	3CS24	N/A	N/A
GENVLV-023	2.0"	150	RF	Gate Valve	11PT002 2" Manifold Block Valve	2 S/C	Replace valve (see sketch SK-5315-21)	D-308308	1CS12	N/A	N/A
GENVLV-024	0.75"	800	Welded	Gate Valve	11PT002 3/4" Root Valve on Manifold	2 S/C	Replace valve (see sketch SK-5315-21)	D-308308	1CS12	CVX-101, 104, 108	450 psig
GENVLV-025	1.5"	800	Welded	Gate Valve	V-1170 Bottoms to V-1198	Sour H/C	Replace Valve REV-2 (SK-5315-22)	D-308315/ 0955-016-015	1CS13	CVX-101	310psig
GENVLV-026	0.75"	800	Welded	Gate Valve	P-1179 50# Steam Quench Upstream Block Valve	50# Steam	Replace valve (see sketch SK-5315-23)	D-308345	1CS13	CVX-101, 104, 108	450 psig
GENVLV-027	0.75"	800	Welded	Gate Valve	P-1188 Suction Steam Tracing Block Valve (Trap# B-0981)	150# Steam	Replace valve per piping modification EWO#BE126-E1	D-3083434	1CS13		
GENVLV-028	0.75"	800	Welded	Gate Valve	P-1105 Warm-up line Upstream Block Valve	Atmos. Crude	Repack the valve (see sketch SK-5315-25)	D-357211/ 0955-009-002	TF1	N/A	N/A

The QUICKEST WAY TO AN ACCIDENT IS TO TAKE A SHORT-CUT

CUSA-CSB-0018997
EPA

D&R Distillation

EWO LIST

General Valve Work Detail List

Passport # 313079-001	Plant: 4Crude	Impact Team Leader	Woolley, Scott J.
EWO # BE102-O1	Equipment: 4Q 11 4CU S/D - G/V LIST	Impact Supervisor:	Smith, Bruce D.
MOC #	Shutdown Info: 2011 4CU SHUTDOWN	Maint. Supervisor:	Mark Paulson
		Ops. Coordinator:	Kenneth C. Sohnrey

Tag Number	Valve				Location	Service	Work	P&ID / ISO #	Pipe Class	Weld Proc	Hydro (psi)
	Size (in.)	Rating	End Conn.	Type							
GENVLV-029	4"	300	RF	Gate Valve	11FV059 Downstream Block Valve	5 S/C	Replace valve (see sketch SK-5315-26)	D-308309/ 0955-008-002	3CL11	N/A	N/A
GENVLV-030	0.75"	800	Welded	Gate Valve	Steam Trap by P-1148 (11FT073) Upstream Block Valve	150# Steam	Replace valve per piping modification EWO#BE124-E1	D-308352	1CS13		
GENVLV-031	6"	150	RF	Gate Valve	P-1175 Suction Block Valve	Sour H2O	Replace valve (see sketch SK-5315-28)	D-308332/ 0955-020-003	1CS23	N/A	N/A
GENVLV-032	6"	150	RF	Gate Valve	P-1175A Suction Block Valve	Sour H2O	Replace valve (see sketch SK-5315-28)	D-308332/ 0955-020-003	1CS23	N/A	N/A
GENVLV-033	0.75"	800	Welded	Gate Valve	P-1168 Case Vent Line, Steam Tracing Trap, Downstream Block Valve	150# Steam	Replace valve (see sketch SK-5315-29)	D-308342/ 0955-037-013	1CS13	CVX-101, 104, 108	450 psig
GENVLV-034	12"	300	RF	Gate Valve	E-1115 Shell Side Inlet Block Valve	Crude	Replace valve (see sketch SK-5315-30)	D-308304/ 0955-002-006	3CS11	N/A	N/A
GENVLV-035	6"	300	RF	Orbit Valve	K-1109B Upstream Block Valve (Orbit)	7 S/C	Replace valve (see sketch SK-5315-31)	D-308304/ 0955-012-002	3CS24	N/A	N/A
GENVLV-036	6"	300	RF	Orbit Valve	K-1109B Downstream Block Valve (Orbit)	7 S/C	Replace valve (see sketch SK-5315-31)	D-308304/ 0955-012-002	3CS24	N/A	N/A
GENVLV-037	0.75"	800	Welded	Gate Valve	E-1178 Upstream Block Valve Steam Tracing Shellside Outlet	150# Steam	Replace valve per piping modification EWO#BE125-E1	D-308343	1CS13		
GENVLV-038	0.75"	800	Welded	Gate Valve	P-1198 150# Pilot Steam Valve	150# Steam	Replace valve per piping modification EWO#BE-134-E1	D-308348	1CS13	CVX-101, 104, 108	450 psig
GENVLV-039	8"	150	RF	Gate Valve	P-1119 Suction Valve	1 S/C	Replace valve (see sketch SK-5315-34)	D-308310/ 0955-004-002	1CS12	N/A	N/A
GENVLV-040	4"	300	RF	Gate Valve	P-1119 Discharge Valve	1 S/C	Replace valve (see sketch SK-5315-35)	D-308310/ 0955-004-003	3CS11	N/A	N/A
GENVLV-041	3"	150	RF	Gate Valve	P-1119 PO Block Valve	Pump Out	Replace valve (see sketch SK-5315-36)	D-308310/ 0955-024-003A	1CS12	N/A	N/A
GENVLV-042	4"	300	RF	Gate Valve	11PV972 Downstream Block Valve	Pump Out	Replace valve (see sketch SK-5315-37)	D-308338/ 0955-012-004	3CS11	N/A	N/A

The QUICKEST WAY TO AN ACCIDENT IS TO TAKE [illegible]ORT-CUT

CUSA-CSB-0018998
EPA

EWO LIST

General Valve Work Detail Lis

Passport # 313079-001	**Plant:** 4Crude	**Impact Team Leader** Woolley, Scott J.	
EWO # BE102-O1	**Equipment:** 4Q 11 4CU S/D - G/V LIST	**Impact Supervisor:** Smith, Bruce D.	
MOC #	**Shutdown Info:** 2011 4CU SHUTDOWN	**Maint. Supervisor:** Mark Paulson	
		Ops. Coordinator: Kenneth C. Sohnrey	

Tag Number	Valve				Location	Service	Work	P&ID / ISO #	Pipe Class	Weld Proc	Hydro (psi)
	Size (in.)	Rating	End Conn.	Type							
GENVLV-043	0.75"	800	Tubing	Gate Valve	11LT051 Bottom Lead Block Valve	Pump Out	Replace valve (see sketch SK-5315-38)	D-308308	1CS12	CVX-101, 104, 108	450 psig
GENVLV-044	1"	800	Welded	Gate Valve	Sarco Pot "A" Process Inlet	Recovered Oil	Replace valve (see sketch SK-5315-39-01 & 02)	D-311337/ 0955-009-014	1CS11	CVX-101, 104, 108	450 psig
GENVLV-045	1"	800	Welded	Gate Valve	Sarco Pot "B" Process Inlet	Recovered Oil	Replace valve (see sketch SK-5315-39-01 & 02)	D-311337/ 0957-009-014	1CS11	CVX-101, 104, 108	450 psig
GENVLV-046	1"	800	Welded	Gate Valve	Sarco Pot "A" Process Outlet	Recovered Oil	Replace valve (see sketch SK-5315-39-01 & 02)	D-311337/ 0957-009-014	1CS11	CVX-101, 104, 108	450 psig
GENVLV-047	1"	800	Welded	Gate Valve	Sarco Pot "B" Process Outlet	Recovered Oil	Replace valve (see sketch SK-5315-39-01 & 02)	D-311337/ 0957-009-014	1CS11	CVX-101, 104, 108	450 psig
GENVLV-048	1.5"	800	Welded	Gate Valve	D-3110 Loop Deal Water Charge Line	H2O	Open, Insp. & Repair Valve (see sketch SK-5315-40)	D-311337/ 0957-008-007	AB2	N/A	N/A
GENVLV-049	12"	300	RF	Gate Valve	E-1107A/B ATCR Outlet Block Valve	ATCR	Replace valve (see sketch SK-5315-41)	D-308301/ 0955-005-013	3CS11	N/A	N/A
GENVLV-050	10"	300	RF	Gate Valve	E-1102A/B/C Crude Inlet Block Valve	Crude	Replace valve (see sketch SK-5315-42)	D-308301/ 0955-001-003	3CS11	N/A	N/A
ORB-VLV-01	10"	150	RF	Orbit Valve	K-1100B 1st Stage Suction valve	Off Gas	Open, Insp. & Repair Valve (see SK-5315-01)	D-308316 / 0955-016-002	AB1	N/A	N/A
ORB-VLV-02	2.0"	150	RF	Orbit Valve	V-1172A Safety Bypass (C7-55)	Off Gas	Replace valve (see sketch SK-5315-02)	D-308334 / 0955-010-017	1CS12	N/A	N/A
ORB-VLV-03	1.5"	600	Welded	Orbit Valve	V-1104 Safety Bypass (C7-25)	Naphtha	Open, Insp. & Repair Valve (see SK-5315-03)	D-308314 / 0955-019-028	AF1	N/A	N/A

CUSA-CSB-0018999
EPA

ORBVLV-01

Open inspect and repair as necessary

10", 150#, Orbit valve

(Valve does not operate smoothly), Pipe class: AB1

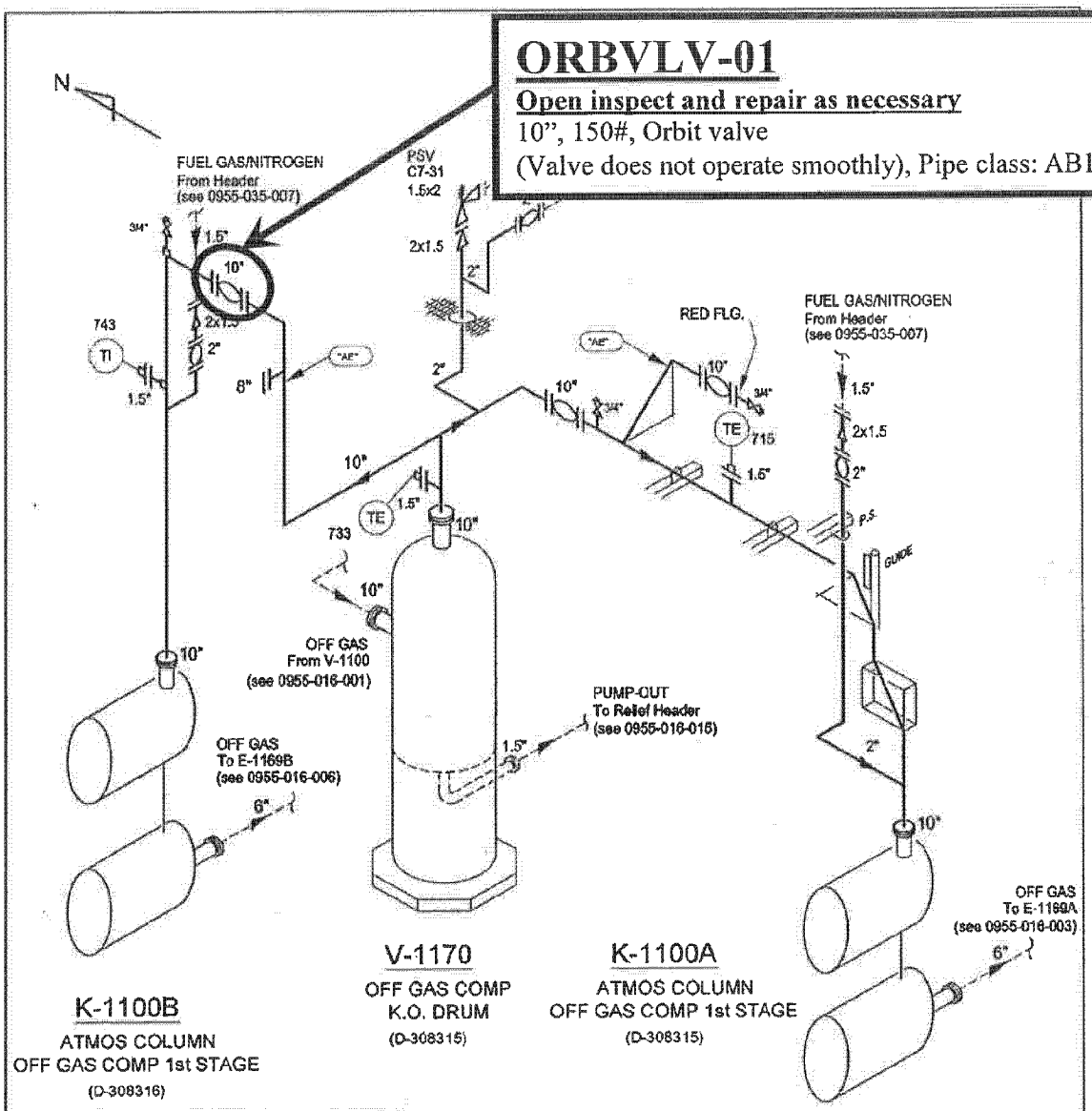

SK-5315-01

V-1100 OUTLET TO K-1100A/B

REVISION			
4	RECONCILED LABELING AND STANDARDIZED FORMAT FOR PRD/PSV IDENTIFICATION. 02/15/08	DOGR	PHSC
		TPVA	

STATUS: ISO570 COMPLETE	RATING? [X] 150# [ ] 300#	API-570 [ ] CLASS I	02/18/2008 DOGR	INSPECTION PIPING ISOMETRIC
MATERIAL: C.S. / SERVICE: OFF-GAS	STM TRACED? [X]	[X] CLASS II		#16 OFF-GAS
PIPE CLASS: "AB1"(AE) / PWHT: NO	INSULATED? [X]	[ ] CLASS III		#4 CRUDE UNIT (PLANT 11)
				DISTILLATION AND REFORMING AREA BUSINESS UNIT
LINE NAME: V-1100 OUTLET TO K-1100A/B			Z	0955-016-002 — REV 4, SHT 1
FROM: V-1170				
TO: K-1100A/B (1ST STAGE)				

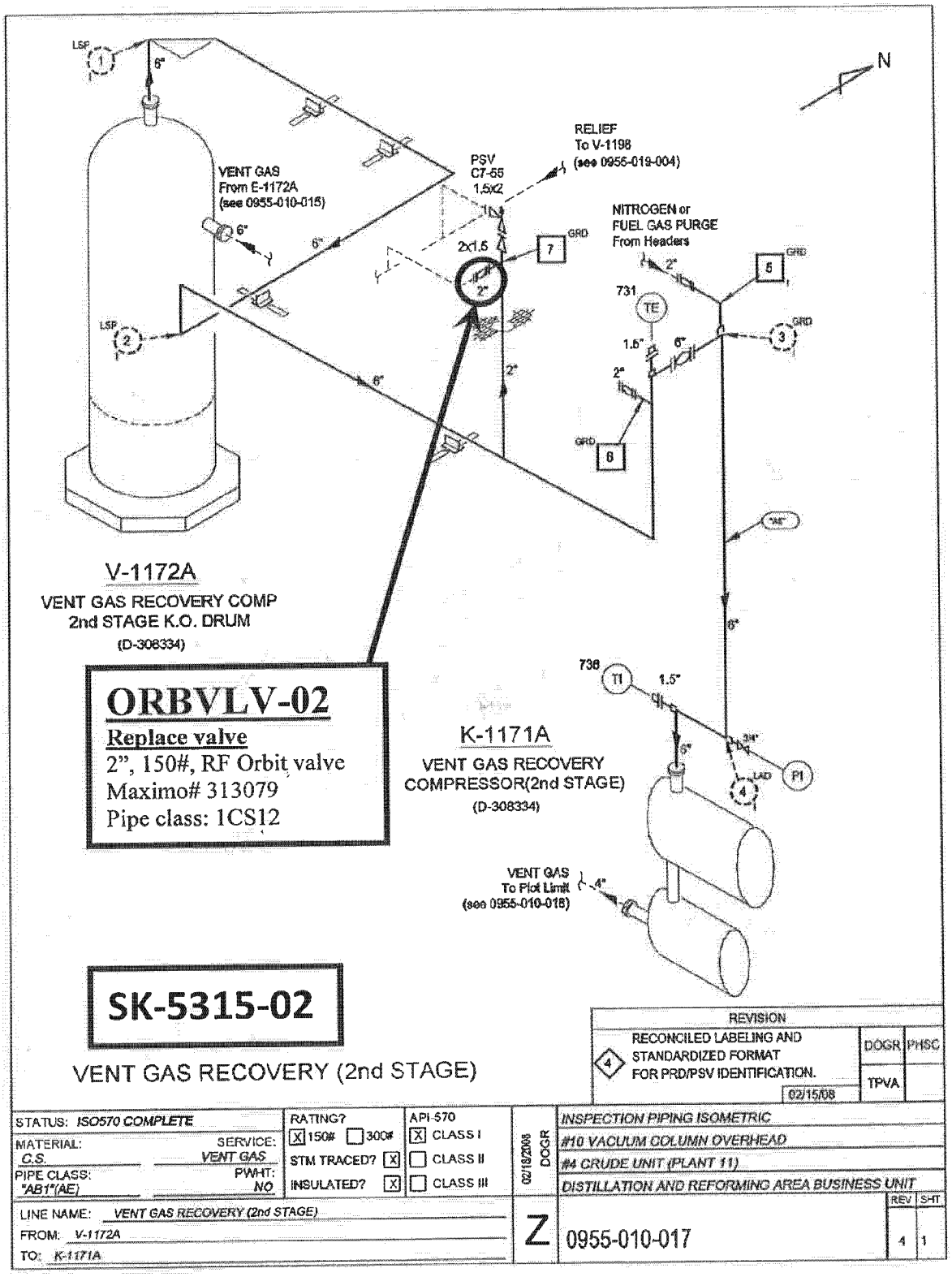

SK-5315-02

VENT GAS RECOVERY (2nd STAGE)

REVISION			
4	RECONCILED LABELING AND STANDARDIZED FORMAT FOR PRD/PSV IDENTIFICATION. 02/15/08	DOGR	PHSC
		TPVA	

STATUS: ISO570 COMPLETE	RATING? [X] 150# [ ] 300#	API-570 [X] CLASS I	02/19/2008 DOGR	INSPECTION PIPING ISOMETRIC
MATERIAL: C.S. / SERVICE: VENT GAS	STM TRACED? [X]	[ ] CLASS II		#10 VACUUM COLUMN OVERHEAD
PIPE CLASS: "AB1"(AE) / PWHT: NO	INSULATED? [X]	[ ] CLASS III		#4 CRUDE UNIT (PLANT 11)
				DISTILLATION AND REFORMING AREA BUSINESS UNIT
LINE NAME: VENT GAS RECOVERY (2nd STAGE)			Z	0955-010-017 — REV 4, SHT 1
FROM: V-1172A				
TO: K-1171A				

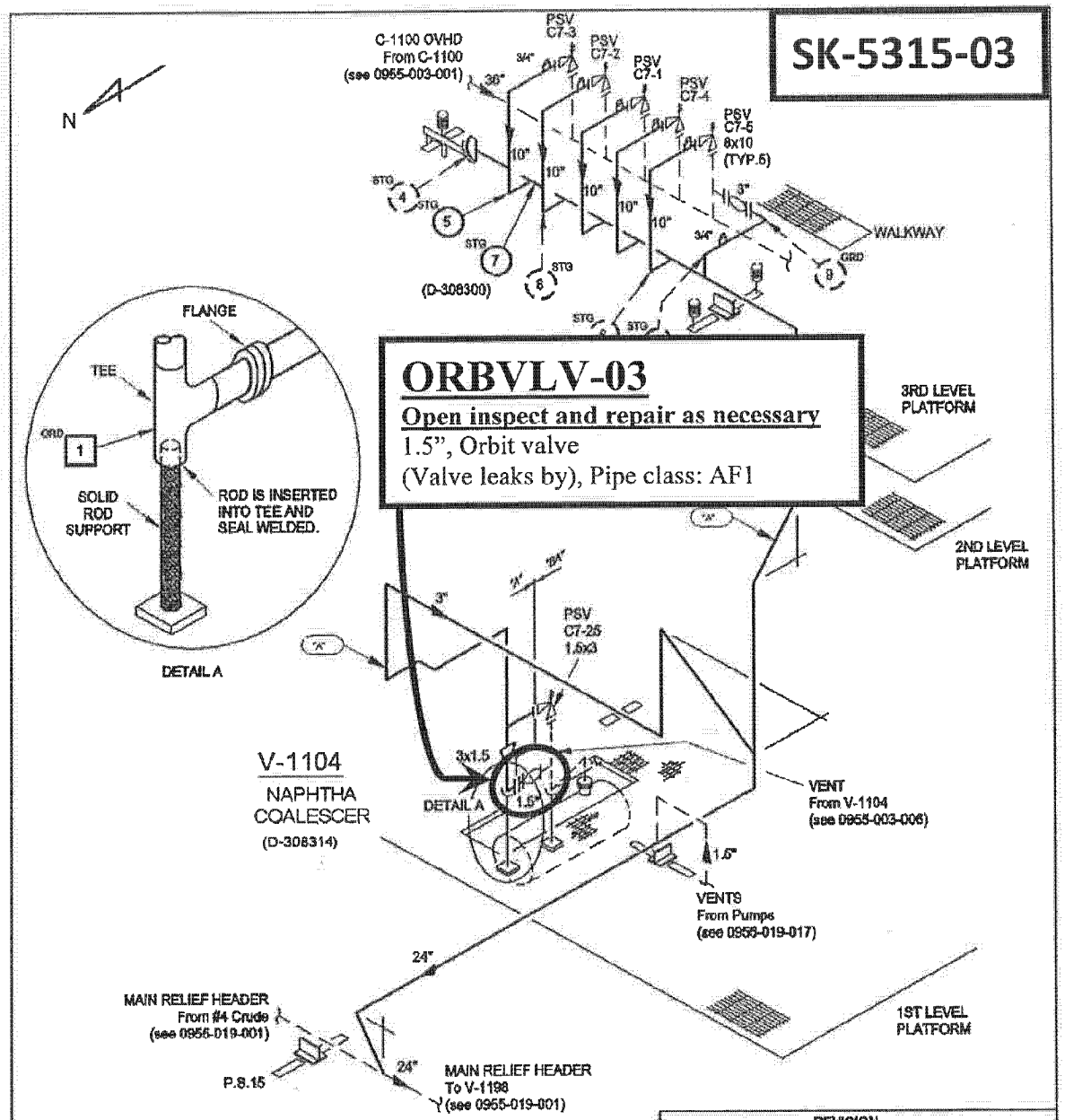
SK-5315-03
N
C-1100 OVHD
From C-1100
(see 0955-003-001)
PSV C7-3
PSV C7-2
PSV C7-1
PSV C7-4
PSV C7-5
8x10
(TYP.5)
WALKWAY
(D-308300)
ORBVLV-03
Open inspect and repair as necessary
1.5", Orbit valve
(Valve leaks by), Pipe class: AF1
FLANGE
TEE
SOLID ROD SUPPORT
ROD IS INSERTED INTO TEE AND SEAL WELDED.
DETAIL A
3RD LEVEL PLATFORM
2ND LEVEL PLATFORM
PSV C7-25
1.5x3
V-1104
NAPHTHA COALESCER
(D-308314)
VENT
From V-1104
(see 0955-003-006)
VENTS
From Pumps
(see 0955-019-017)
1ST LEVEL PLATFORM
MAIN RELIEF HEADER
From #4 Crude
(see 0955-019-001)
P.S.15
MAIN RELIEF HEADER
To V-1198
(see 0955-019-001)
REVISION
RECONCILED LABELING AND STANDARDIZED FORMAT FOR PRD/PSV IDENTIFICATION.
DOGR
PHSC
TPVA
02/15/08
C-1100 OVHD RELIEF TO RELIEF HEADER
STATUS: ISO570 COMPLETE
MATERIAL: C.S.
SERVICE: RELIEF
PIPE CLASS: "AB0"(A)/"AF1"(BA)
PWHT: NO
RATING? 150# 300#
STM TRACED?
INSULATED?
API-570
CLASS I
CLASS II
CLASS III
02/18/2008
DOGR
INSPECTION PIPING ISOMETRIC
#19 RELIEF
#4 CRUDE UNIT (PLANT 11)
DISTILLATION AND REFORMING AREA BUSINESS UNIT
LINE NAME: C-1100 OVHD RELIEF TO RELIEF HEADER
FROM: PSV-056/57/58/59/63 & V-1104
TO: MAIN RELIEF HEADER
Z
0955-019-028
REV 5
SHT 1

SK-5315-04

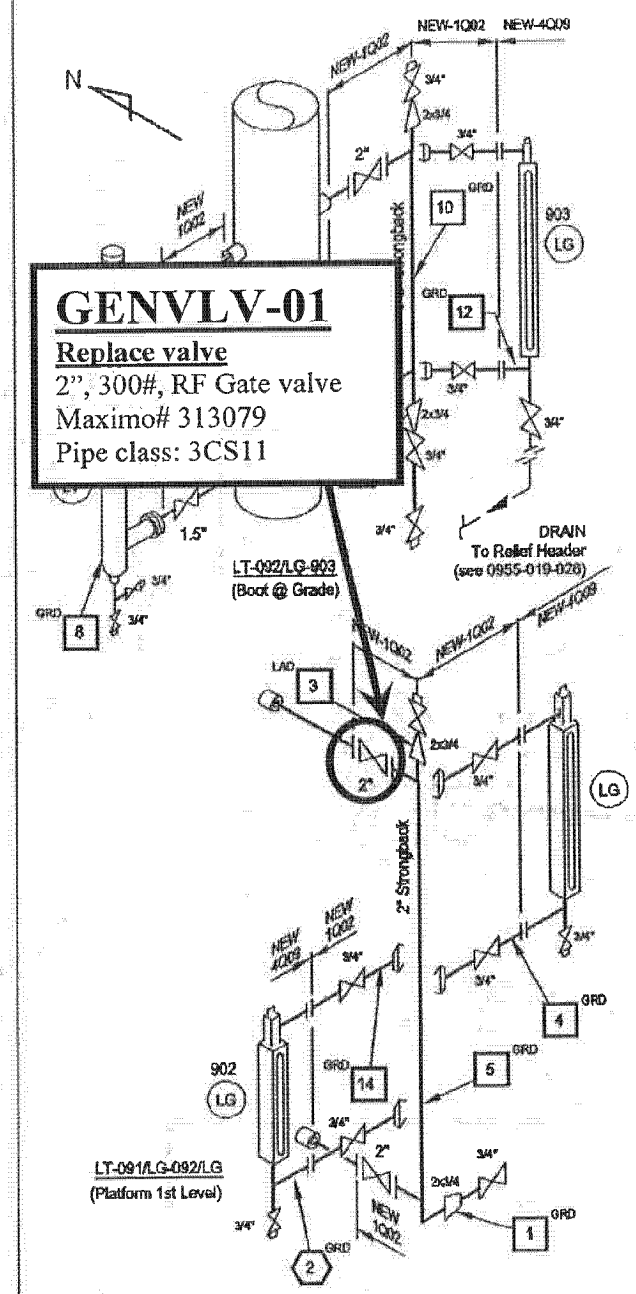

GENVLV-01

Replace valve

2", 300#, RF Gate valve

Maximo# 313079

Pipe class: 3CS11

V-1190 LEVEL INSTRUMENTS

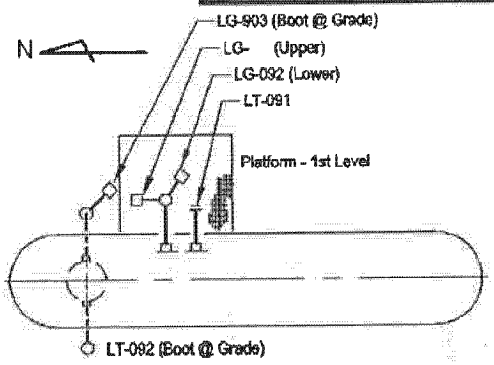

V-1190

STABILIZER REFLUX DRUM
ORIENTATION PLAN
(D-308316)

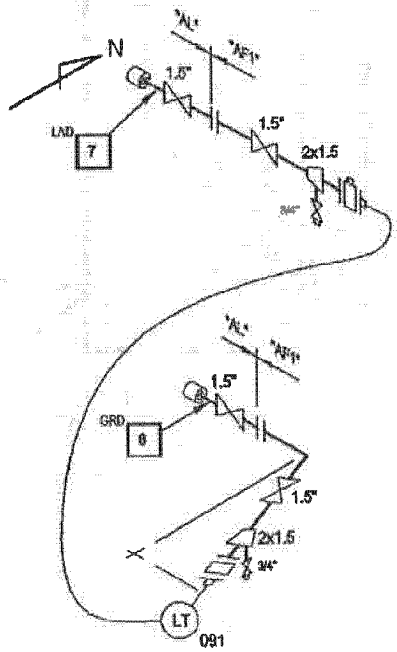

REVISION		
6 REPLACED LEVEL GAGES PER MOC# 19695. FIELD VERIFIED BY Jack Silbaugh 01-25-10	JSLB / TPVA	JGLZ

STATUS: ISO570 COMPLETE	RATING? [X] 150# [X] 300#	API-570 [X] CLASS I	03/02/2010 TTMW	INSPECTION PIPING ISOMETRIC
MATERIAL: C.S. / SERVICE: HC	STM TRACED? [ ]	[ ] CLASS II		#17 STABILIZER OVERHEAD
PIPE CLASS: "AF1","AB2"(AL) / PWHT: NO	INSULATED? [ ]	[ ] CLASS III		#4 CRUDE UNIT (PLANT 11)
				DISTILLATION AND REFORMING AREA BUSINESS UNIT

LINE NAME: V-1190 LEVEL INSTRUMENTS	Z	0955-017-007	REV 6 / SHT 1
FROM:			
TO:			

SK-5315-05

GENVLV-003,004

Replace valve

6", 150#, RF Globe valve
Maximo# 313079, Pipe class: 1CS12
Disconnect limit switch prior to valve replacement and reconnect limit switch after valve installed and check its operation

GENVLV-002

Replace valve

4", 150#, RF Globe valve
Maximo# 313079
Pipe class: 1CS12
Disconnect limit switch prior to valve replacement and reconnect limit switch after valve installed and check its operation

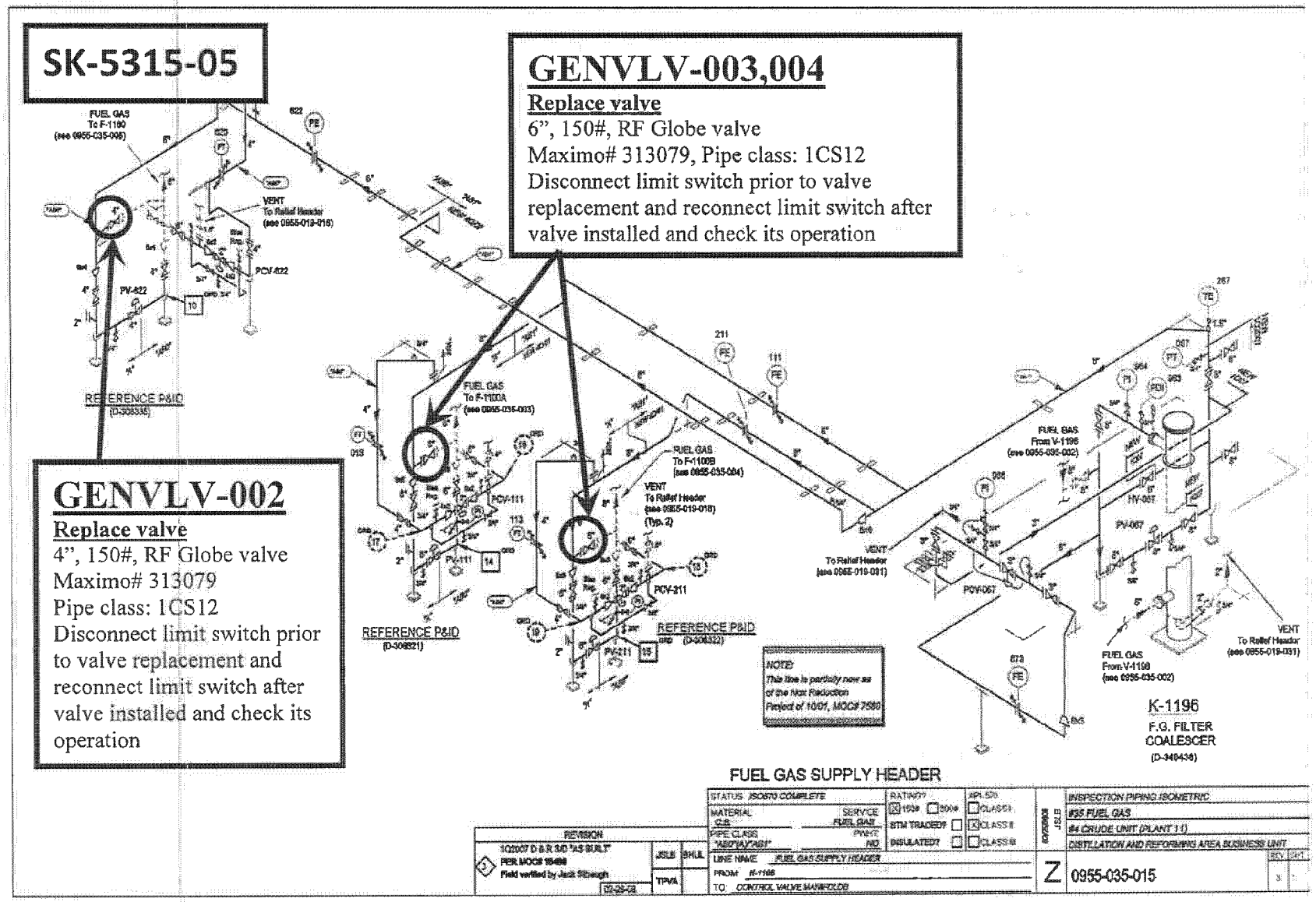

FUEL GAS SUPPLY HEADER

REVISION			
1Q2007 D & R 3/D "AS BUILT" PER MOC# 19499 Field verified by Jack Stheagh	JSLS	SHUL	
	TPVA		02-28-08

STATUS: ISO670 COMPLETE
MATERIAL: C.S. — SERVICE: FUEL GAS
PIPE CLASS: "ABC"(A)"ABS" — PWHT: NO
RATING? [X] 150# [ ] 300# — STM TRACED? [ ] — INSULATED? [ ]
API 570: [ ] CLASS I [X] CLASS II [ ] CLASS III
LINE NAME: FUEL GAS SUPPLY HEADER
FROM: K-1196
TO: CONTROL VALVE MANIFOLDS

Z — 0955-035-015

INSPECTION PIPING ISOMETRIC
#35 FUEL GAS
#4 CRUDE UNIT (PLANT 1-1)
DISTILLATION AND REFORMING AREA BUSINESS UNIT

REV 3 SHT 1

GENVLV-006
Replace valve
12", 300#, RF Gate valve
Maximo# 313079
Pipe class: 3CS11

SK-5315-06

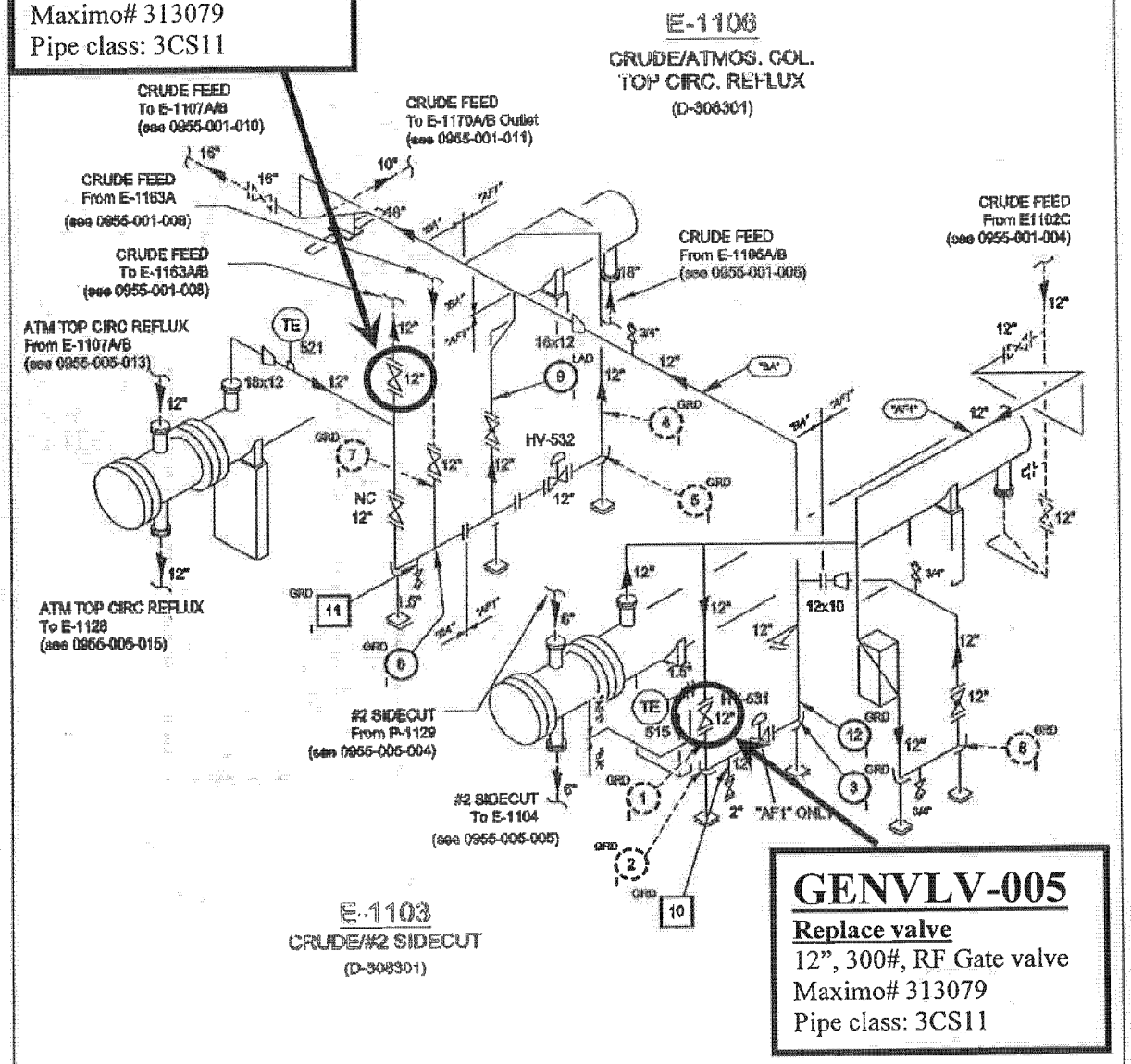

GENVLV-005
Replace valve
12", 300#, RF Gate valve
Maximo# 313079
Pipe class: 3CS11

E-1103 & E-1106 OUTLET: CRUDE

STATUS: ISO570 COMPLETE	RATING? ☐ 150# ☒ 300#	API-570 ☐ CLASS I	07/17/01 bk/rn/JEN	INSPECTION PIPING ISOMETRIC
MATERIAL: C.S. / SERVICE: CRUDE	STM TRACED? ☐	☒ CLASS II		#1 CRUDE FEED
PIPE CLASS: "AF1"(BA) / PWHT: NO	INSULATED? ☒	☐ CLASS III		#4 CRUDE UNIT (PLANT 11)
				DISTILLATION AND REFORMING AREA BUSINESS UNIT
LINE NAME: E-1103 & E-1106 OUTLET: CRUDE				REV / SHT
FROM: E-1103 & E-1106			0955-001-007	5 / 1
TO: E-1107A/B Inlet				

SK-5315-08

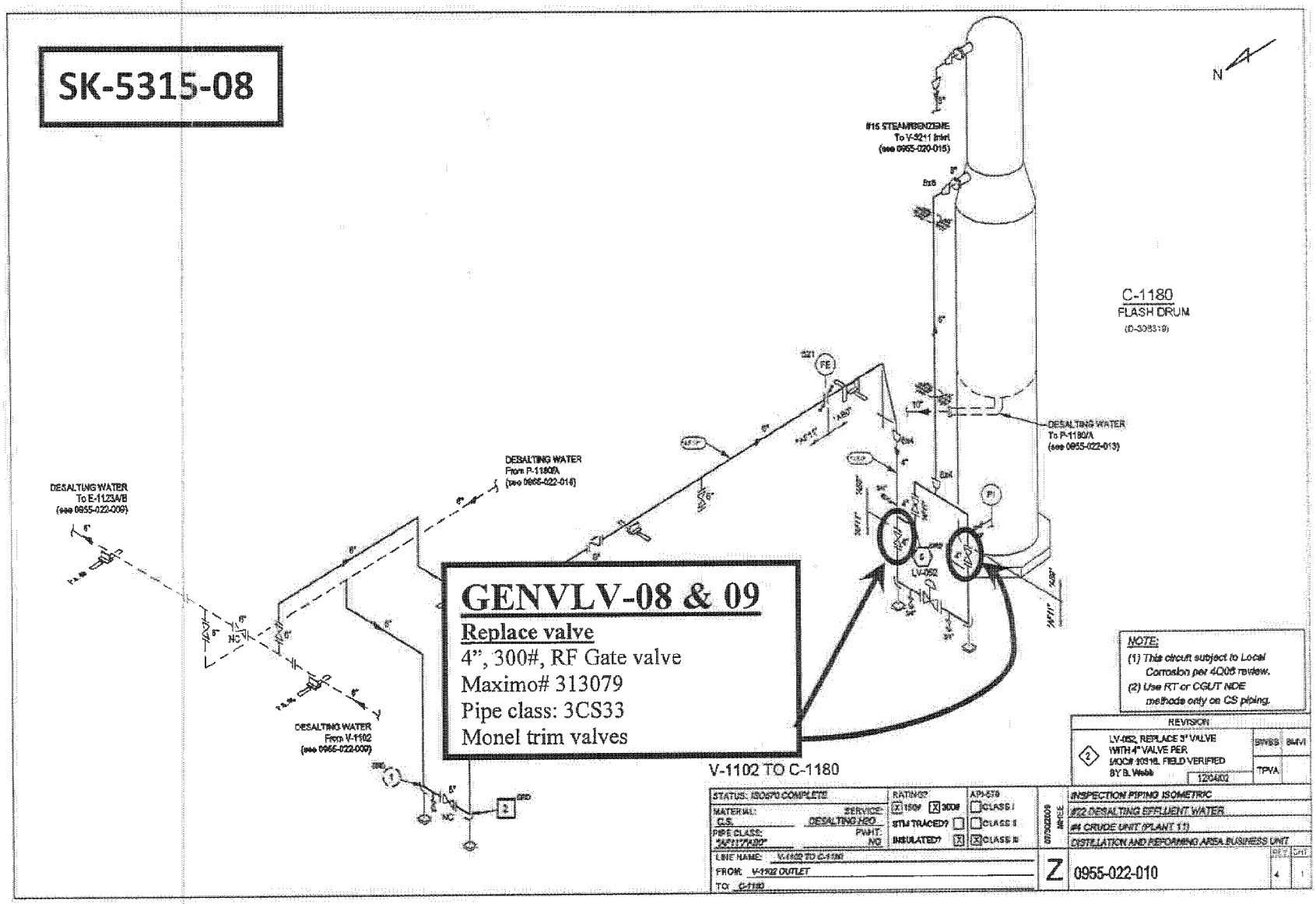

GENVLV-08 & 09

Replace valve

4", 300#, RF Gate valve

Maximo# 313079

Pipe class: 3CS33

Monel trim valves

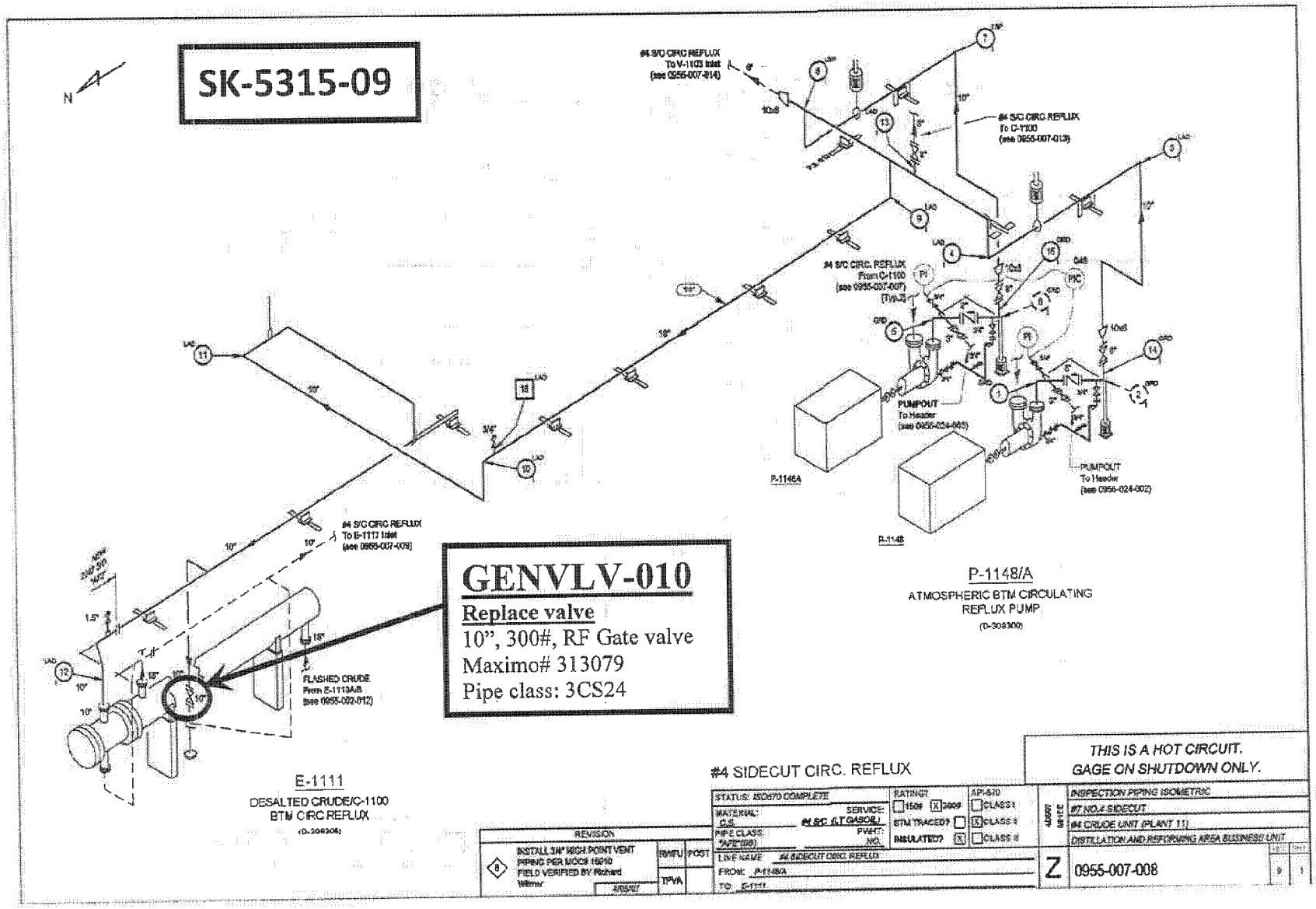
SK-5315-09
N
#4 S/C CIRC REFLUX To V-1103 Inlet (see 0955-007-014)
#4 S/C CIRC REFLUX To C-1100 (see 0955-007-013)
#4 S/C CIRC. REFLUX From C-1100 (see 0955-007-007) (Typ.2)
PUMPOUT To Header (see 0955-024-003)
PUMPOUT To Header (see 0955-024-002)
P-1148A
P-1148
P-1148/A
ATMOSPHERIC BTM CIRCULATING REFLUX PUMP
(D-308300)
#4 S/C CIRC REFLUX To E-1117 Inlet (see 0955-007-009)
FLASHED CRUDE From E-1110A/B (see 0955-002-012)
GENVLV-010
Replace valve
10", 300#, RF Gate valve
Maximo# 313079
Pipe class: 3CS24
E-1111
DESALTED CRUDE/C-1100 BTM CIRC REFLUX
(D-308305)
#4 SIDECUT CIRC. REFLUX
THIS IS A HOT CIRCUIT.
GAGE ON SHUTDOWN ONLY.
STATUS: ISO670 COMPLETE
MATERIAL: C.S.
SERVICE: #4 S/C (LT GASOIL)
PIPE CLASS: 3CS24
PWHT: NO
RATING: 150# X 300#
BTM TRACED? INSULATED?
API-570 CLASS I X CLASS II CLASS III
LINE NAME #4 SIDECUT CIRC. REFLUX
FROM: P-1148/A
TO: E-1111
REVISION
8 INSTALL 3/4" HIGH POINT VENT PIPING PER MOC# 16910 FIELD VERIFIED BY Richard Wilmer
RWFU POST
TPVA
INSPECTION PIPING ISOMETRIC
#7 NO.4 SIDECUT
#4 CRUDE UNIT (PLANT 11)
DISTILLATION AND REFORMING AREA BUSINESS UNIT
Z
0955-007-008

Work instructions for GENVLV-012

1. ??? Questions ??? contact Pat Murphy 2-1864
2. **FIELD VERIFY THE DIMENSIONS**
3. Material:
   - ½" X-Body gate valve on Maximo# 313079
   - Maintenance or Piping Contractor to furnish rest of the material

Shut down work

4. Disconnect the orifice taps of the flow transmitter
5. Disconnect and take down the upstream side piping
6. Save and reuse the orifice plate
7. Replace the upstream side ½" root valve on orifice flange FE067, refer to marked up STD drawing D 601407 in EWO package
   - Pipe class: 1CS12
   - Weld Procedures: CVX 101, CVX 104, CVX 108
   - Hydrotest pressure : 450 psig
8. Re-install the piping & orifice assembly
9. I&E technician to test the operation of the orifice prior to handover

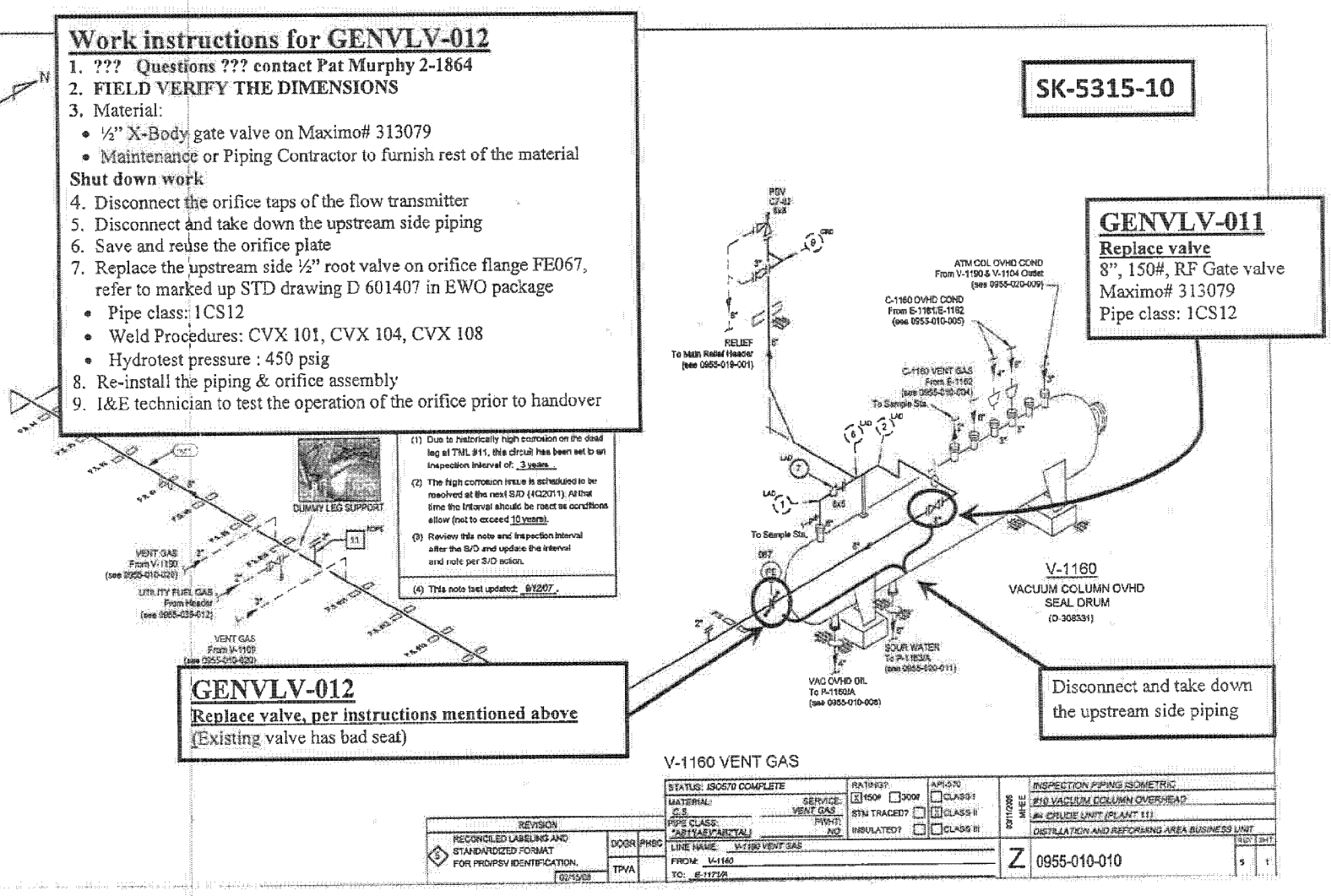

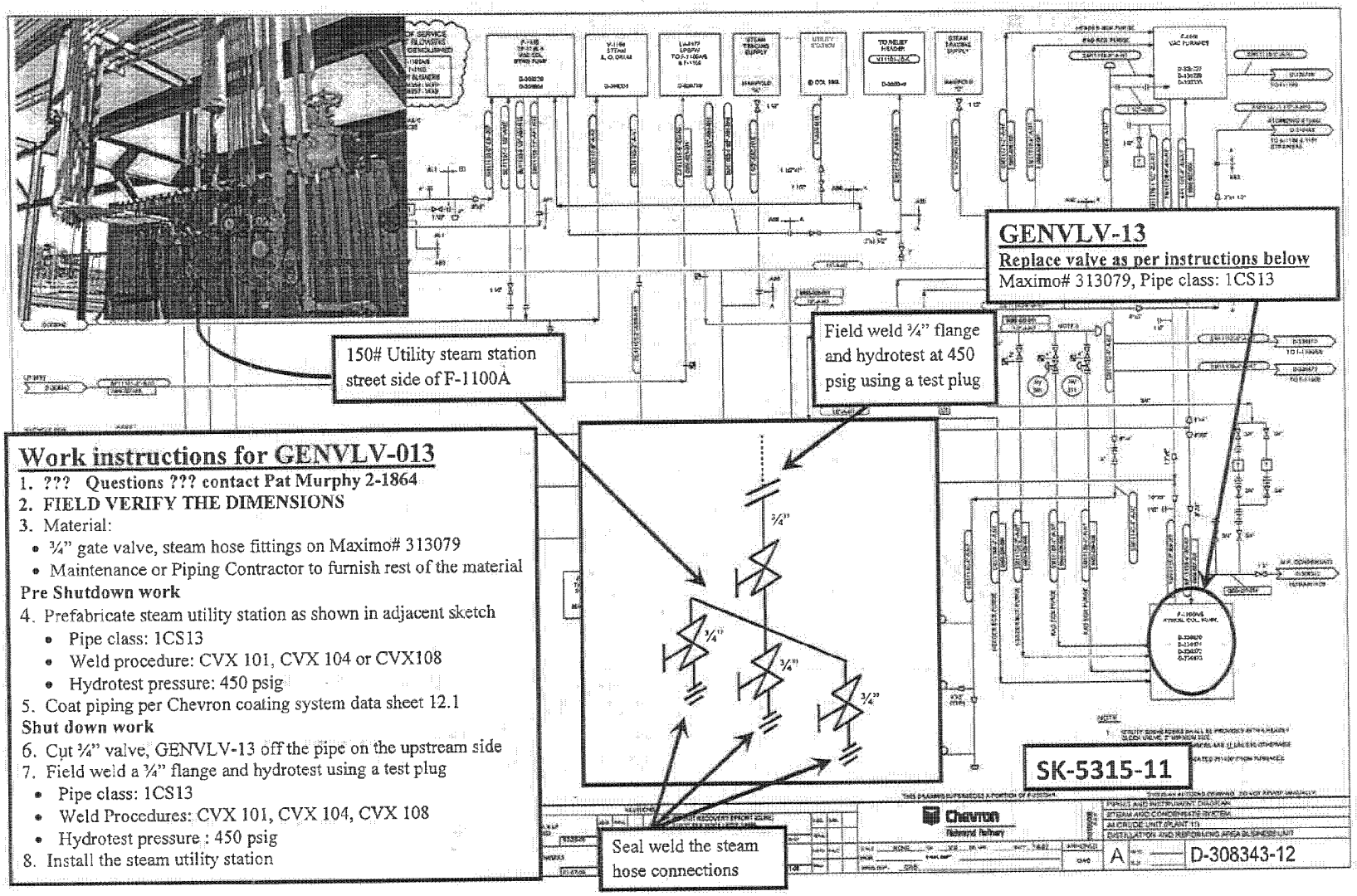

Work instructions for GENVLV-013

1. ??? Questions ??? contact Pat Murphy 2-1864
2. **FIELD VERIFY THE DIMENSIONS**
3. Material:
   - ¾" gate valve, steam hose fittings on Maximo# 313079
   - Maintenance or Piping Contractor to furnish rest of the material

Pre Shutdown work

4. Prefabricate steam utility station as shown in adjacent sketch
   - Pipe class: 1CS13
   - Weld procedure: CVX 101, CVX 104 or CVX108
   - Hydrotest pressure: 450 psig
5. Coat piping per Chevron coating system data sheet 12.1

Shut down work

6. Cut ¾" valve, GENVLV-13 off the pipe on the upstream side
7. Field weld a ¾" flange and hydrotest using a test plug
   - Pipe class: 1CS13
   - Weld Procedures: CVX 101, CVX 104, CVX 108
   - Hydrotest pressure : 450 psig
8. Install the steam utility station

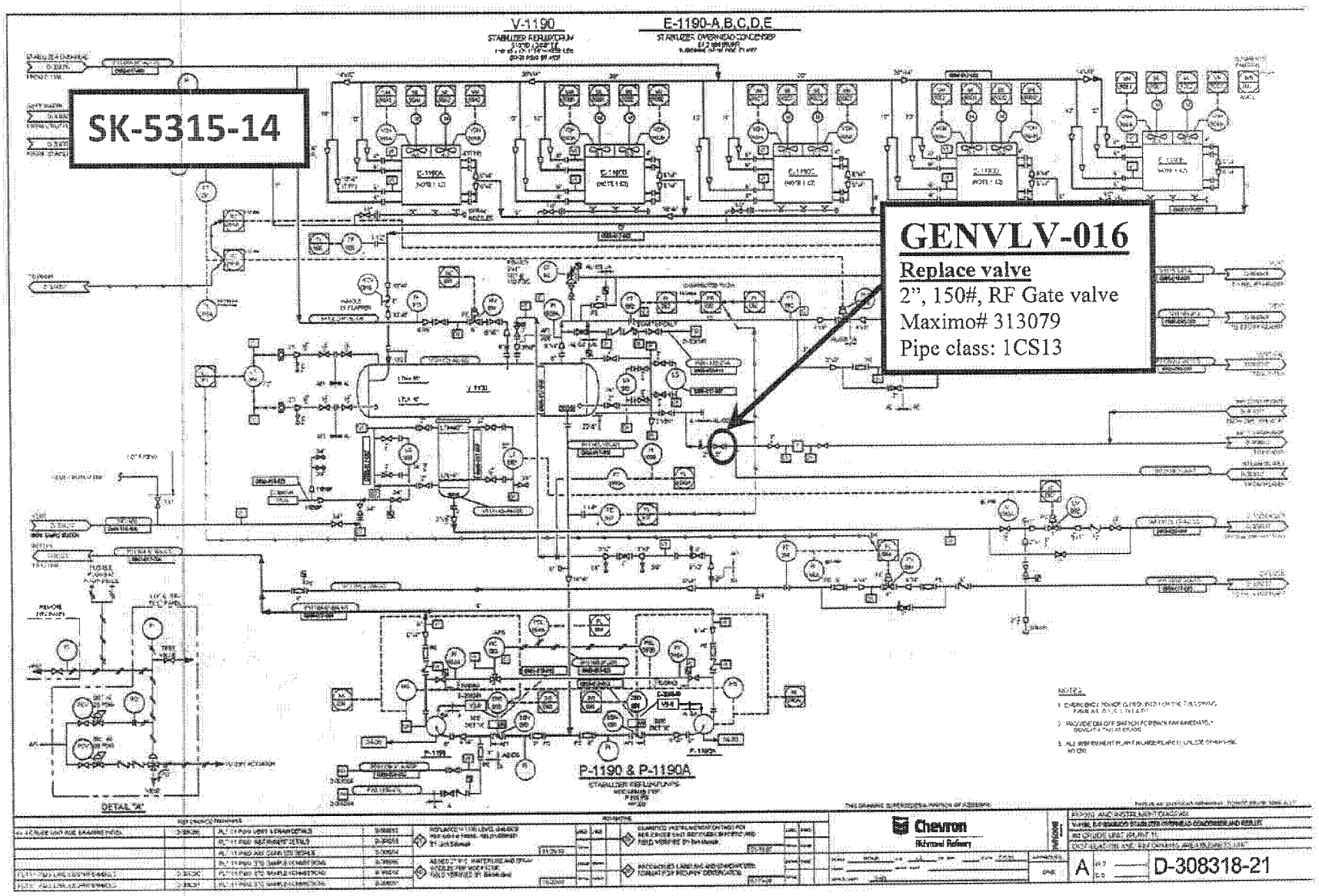
SK-5315-14
V-1190
E-1190-A,B,C,D,E
GENVLV-016
Replace valve
2", 150#, RF Gate valve
Maximo# 313079
Pipe class: 1CS13
P-1190 & P-1190A
DETAIL "A"
Chevron
Richmond Refinery
D-308318-21

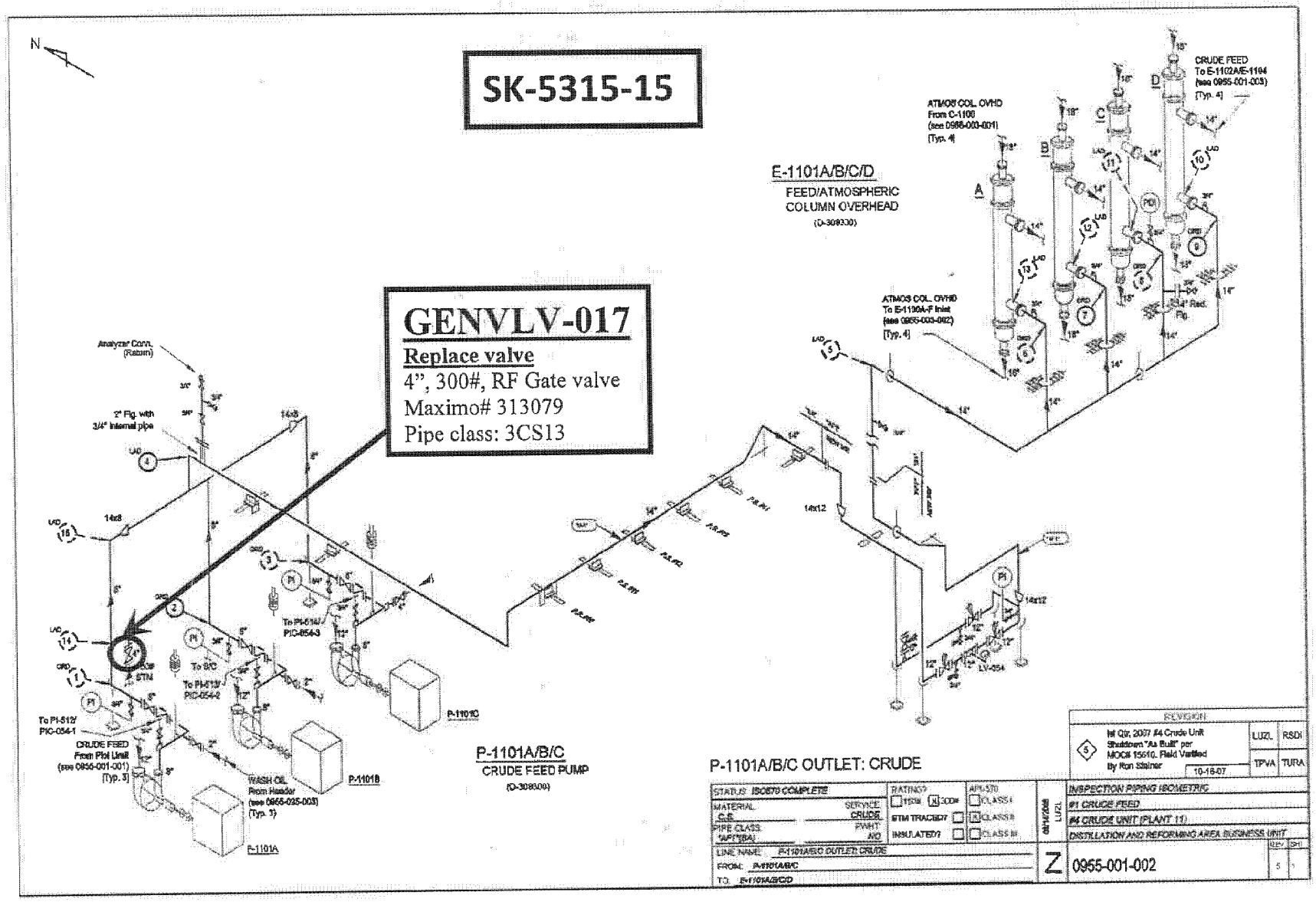
SK-5315-15
GENVLV-017
Replace valve
4", 300#, RF Gate valve
Maximo# 313079
Pipe class: 3CS13
E-1101A/B/C/D
FEED/ATMOSPHERIC COLUMN OVERHEAD
(D-308330)
P-1101A/B/C
CRUDE FEED PUMP
(D-308300)
P-1101A/B/C OUTLET: CRUDE
ATMOS COL. OVHD From C-1100 (see 0955-003-001) [Typ. 4]
ATMOS COL. OVHD To E-1100A-F Inlet (see 0955-003-002) [Typ. 4]
CRUDE FEED To E-1102A/E-1104 (see 0955-001-003) [Typ. 4]
Analyzer Conn. (Return)
2" Fig. with 3/4" Internal pipe
CRUDE FEED From Pilot Unit (see 0955-001-001) [Typ. 3]
WASH OIL From Header (see 0955-025-003) [Typ. 3]
To PI-512/ PIC-054-1
To PI-513/ PIC-054-2
To PI-514/ PIC-054-3
P-1101A
P-1101B
P-1101C
LV-054
REVISION
1st Qtr. 2007 #4 Crude Unit Shutdown "As Built" per MOC# 15610. Field Verified By Ron Stainer 10-16-07
LUZL
RSDI
TPVA
TURA
STATUS: ISO670 COMPLETE
MATERIAL: C.S.
SERVICE: CRUDE
PIPE CLASS: "AF("BA)
PWHT: NO
RATING? 150# 300#
STM TRACED? IMSULATED?
API-570 CLASS I CLASS II CLASS III
INSPECTION PIPING ISOMETRIC
#1 CRUDE FEED
#4 CRUDE UNIT (PLANT 11)
DISTILLATION AND REFORMING AREA BUSINESS UNIT
LINE NAME: P-1101A/B/C OUTLET: CRUDE
FROM: P-1101A/B/C
TO: E-1101A/B/C/D
Z
0955-001-002
REV 5
SH 1

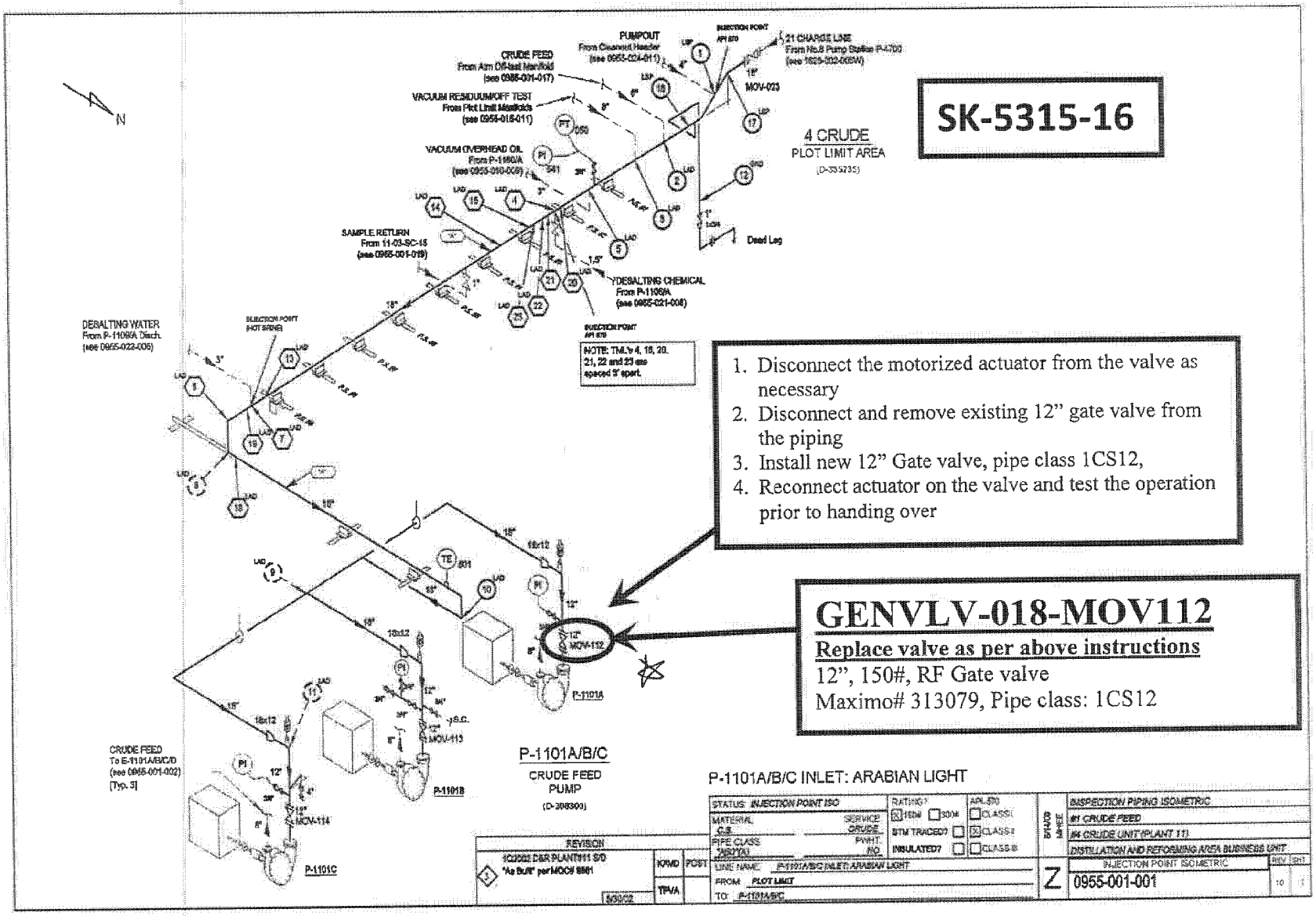

1. Disconnect the motorized actuator from the valve as necessary
2. Disconnect and remove existing 12" gate valve from the piping
3. Install new 12" Gate valve, pipe class 1CS12,
4. Reconnect actuator on the valve and test the operation prior to handing over

GENVLV-018-MOV112

Replace valve as per above instructions

12", 150#, RF Gate valve

Maximo# 313079, Pipe class: 1CS12

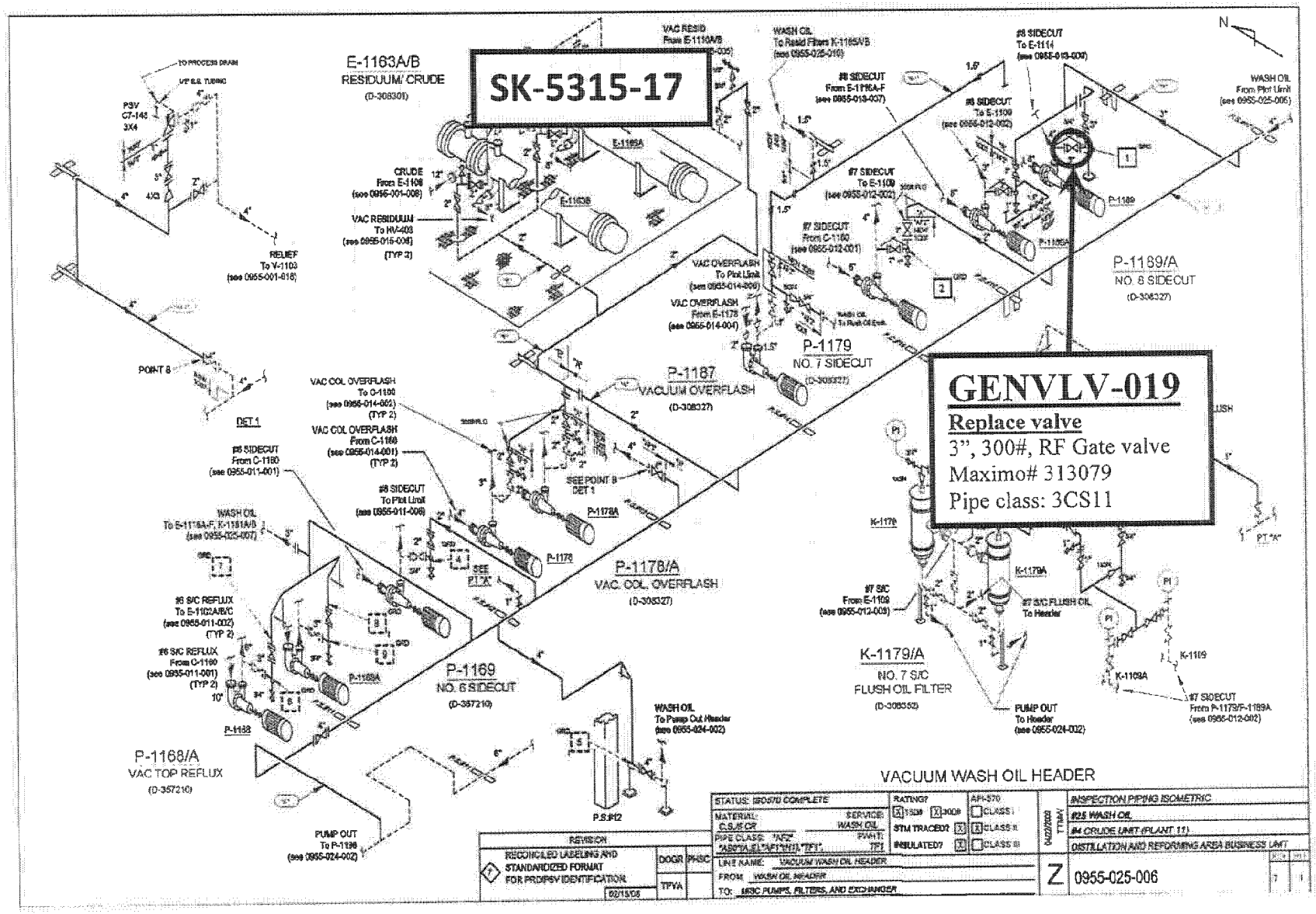
SK-5315-17
E-1163A/B
RESIDUUM/ CRUDE
(D-308301)
P-1189/A
NO. 8 SIDECUT
(D-308327)
P-1179
NO. 7 SIDECUT
(D-308327)
P-1187
VACUUM OVERFLASH
(D-308327)
P-1178/A
VAC. COL. OVERFLASH
(D-308327)
P-1169
NO. 6 SIDECUT
(D-357210)
P-1168/A
VAC TOP REFLUX
(D-357210)
K-1179/A
NO. 7 S/C
FLUSH OIL FILTER
(D-308352)
VACUUM WASH OIL HEADER
GENVLV-019
Replace valve
3", 300#, RF Gate valve
Maximo# 313079
Pipe class: 3CS11
STATUS: ISO570 COMPLETE
MATERIAL: C.S./S.C.S.
SERVICE: WASH OIL
PIPE CLASS: 'AFZ'
RATING7
API-570
INSPECTION PIPING ISOMETRIC
#25 WASH OIL
#4 CRUDE UNIT (PLANT 11)
DISTILLATION AND REFORMING AREA BUSINESS UNIT
LINE NAME: VACUUM WASH OIL HEADER
FROM: WASH OIL HEADER
TO: MISC PUMPS, FILTERS, AND EXCHANGER
RECONCILED LABELING AND STANDARDIZED FORMAT FOR PROPSV IDENTIFICATION
0955-025-006

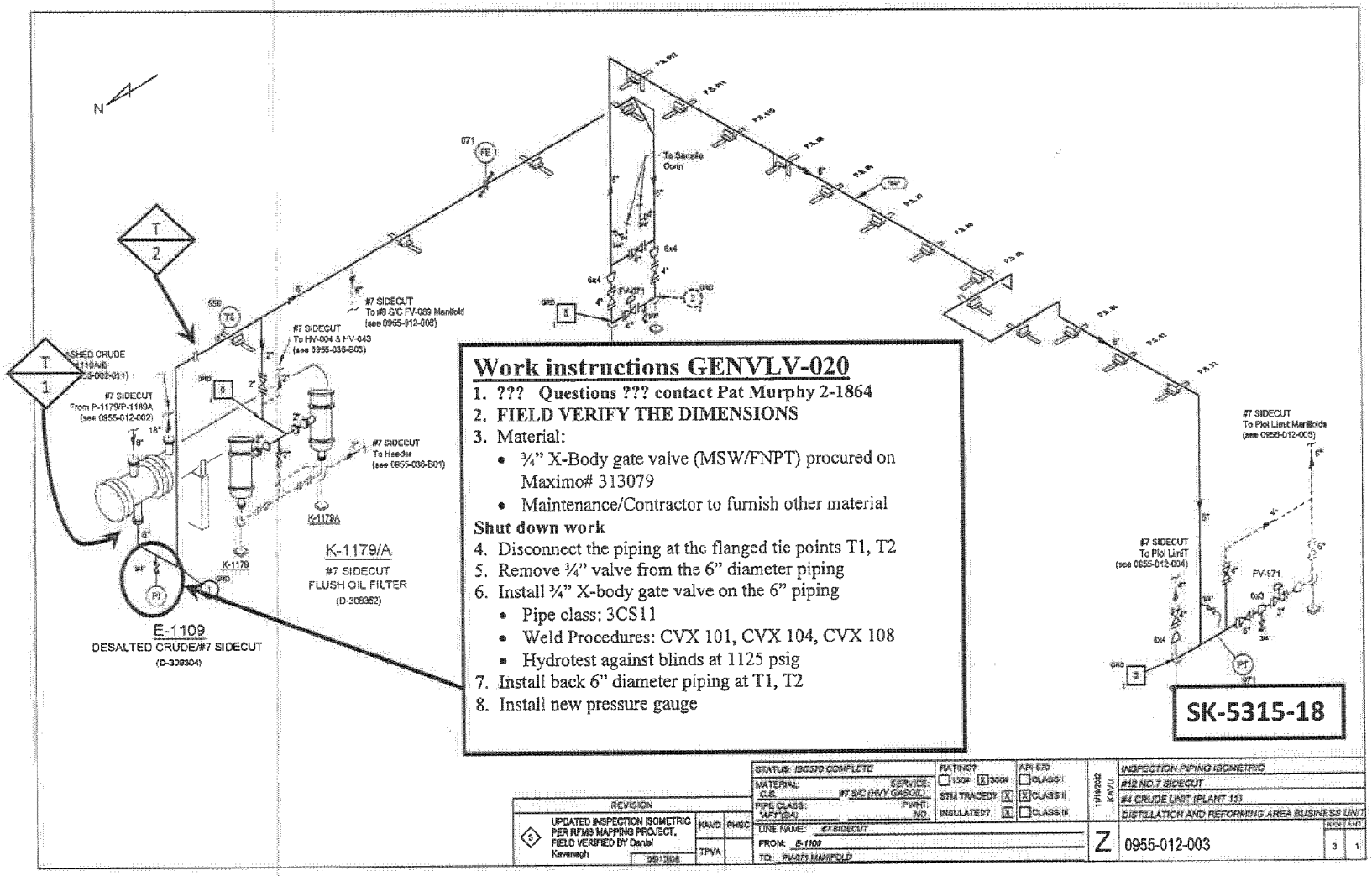

Work instructions GENVLV-020

1. **??? Questions ??? contact Pat Murphy 2-1864**
2. **FIELD VERIFY THE DIMENSIONS**
3. Material:
   - ¾" X-Body gate valve (MSW/FNPT) procured on Maximo# 313079
   - Maintenance/Contractor to furnish other material

Shut down work

4. Disconnect the piping at the flanged tie points T1, T2
5. Remove ¾" valve from the 6" diameter piping
6. Install ¾" X-body gate valve on the 6" piping
   - Pipe class: 3CS11
   - Weld Procedures: CVX 101, CVX 104, CVX 108
   - Hydrotest against blinds at 1125 psig
7. Install back 6" diameter piping at T1, T2
8. Install new pressure gauge

REVISION			
3	UPDATED INSPECTION ISOMETRIC PER RFMS MAPPING PROJECT. FIELD VERIFIED BY Daniel Kavanagh 06/17/08	KAVD	PHSC
		TPVA	

STATUS: ISSUED COMPLETE
MATERIAL: C.S. SERVICE: #7 S/C (HVY GASOIL)
PIPE CLASS: *AF1*(3A) PWHT: NO
RATING? ☐ 150# ☒ 300# STM TRACED? ☒ INSULATED? ☒
API-570 ☐ CLASS I ☒ CLASS II ☐ CLASS III
LINE NAME: #7 SIDECUT
FROM: E-1109
TO: FV-971 MANIFOLD

12/04/2002 KAVD

INSPECTION PIPING ISOMETRIC
#12 NO.7 SIDECUT
#4 CRUDE UNIT (PLANT 13)
DISTILLATION AND REFORMING AREA BUSINESS UNIT

Z 0955-012-003 REV 3 SHT 1

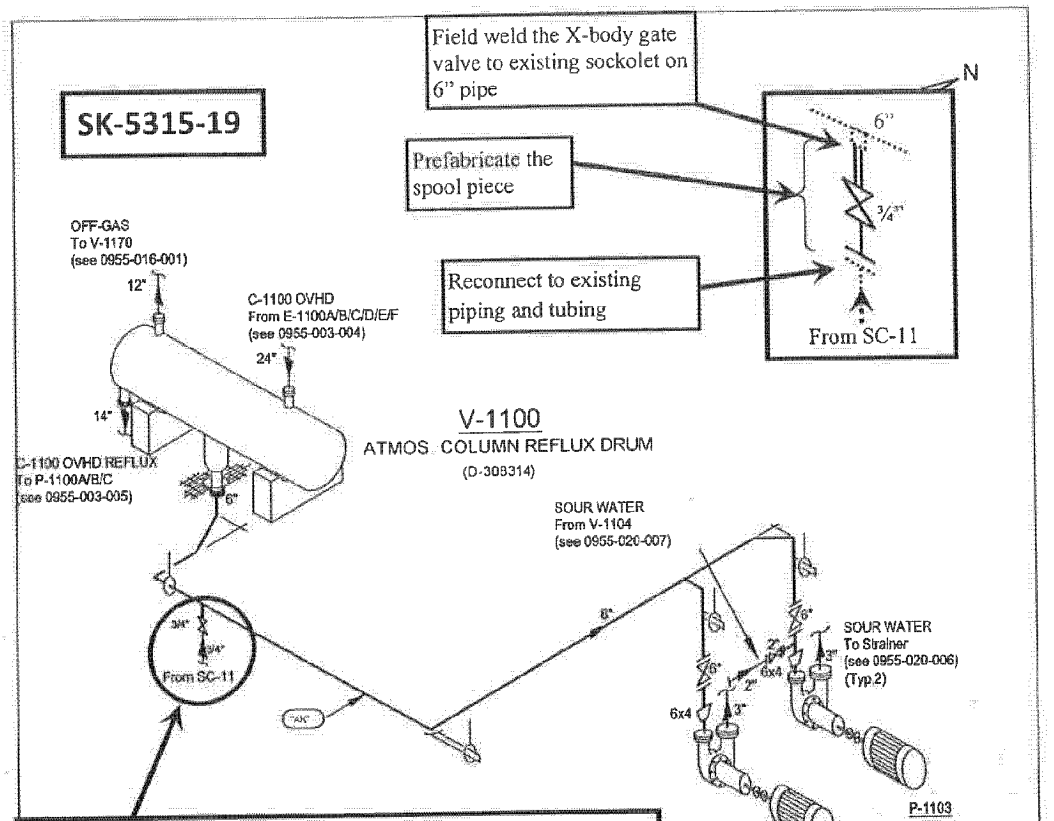

Work instructions for GENVLV-21

1. **??? Questions ??? contact Pat Murphy 2-1864**
2. **FIELD VERIFY THE DIMENSIONS**
3. Material:
   - ¾" X-body gate valve on Maximo# 313079
   - Maintenance or Piping Contractor to furnish rest of the material

Pre Shutdown work

4. Prefabricate spool piece as shown in sketch above
   - Pipe class: 1CS23
   - Weld procedure: CVX 101, CVX 104 or CVX108
   - Hydrotest pressure: 450 psig
5. Coat piping per Chevron coating system data sheet 3.1

Shut down work

6. Disconnect the piping and tubing from SC-11
7. Remove ¾" valve on 6" pipe
8. Field weld ¾" X-body gate valve on 6" pipe
   - Pipe class: 1CS23
   - Weld Procedures: CVX 101, CVX 104, CVX 108
   - Hydrotest against blinds to 450 psig
9. Install piping/tubing from SC-11

SOUR WATER FROM V-1100

STATUS: ISO570 COMPLETE	RATING? [X] 150# [ ] 300#	API-570 [ ] CLASS I	07/29/2009 MHEE	INSPECTION PIPING ISOMETRIC
MATERIAL: C.S. / SERVICE: SOUR WATER	STM TRACED? [ ]	[X] CLASS II		#20 SOUR WATER
PIPE CLASS: "AB4"(AK) / PW-IT: NO	INSULATED? [ ]	[ ] CLASS III		#4 CRUDE UNIT (PLANT 11)
				DISTILLATION AND REFORMING AREA BUSINESS UNIT
LINE NAME: SOUR WATER FROM V-1100			Z	0955-020-005 (REV 1, SHT 1)
FROM: V-1100				
TO: P-1103/A				

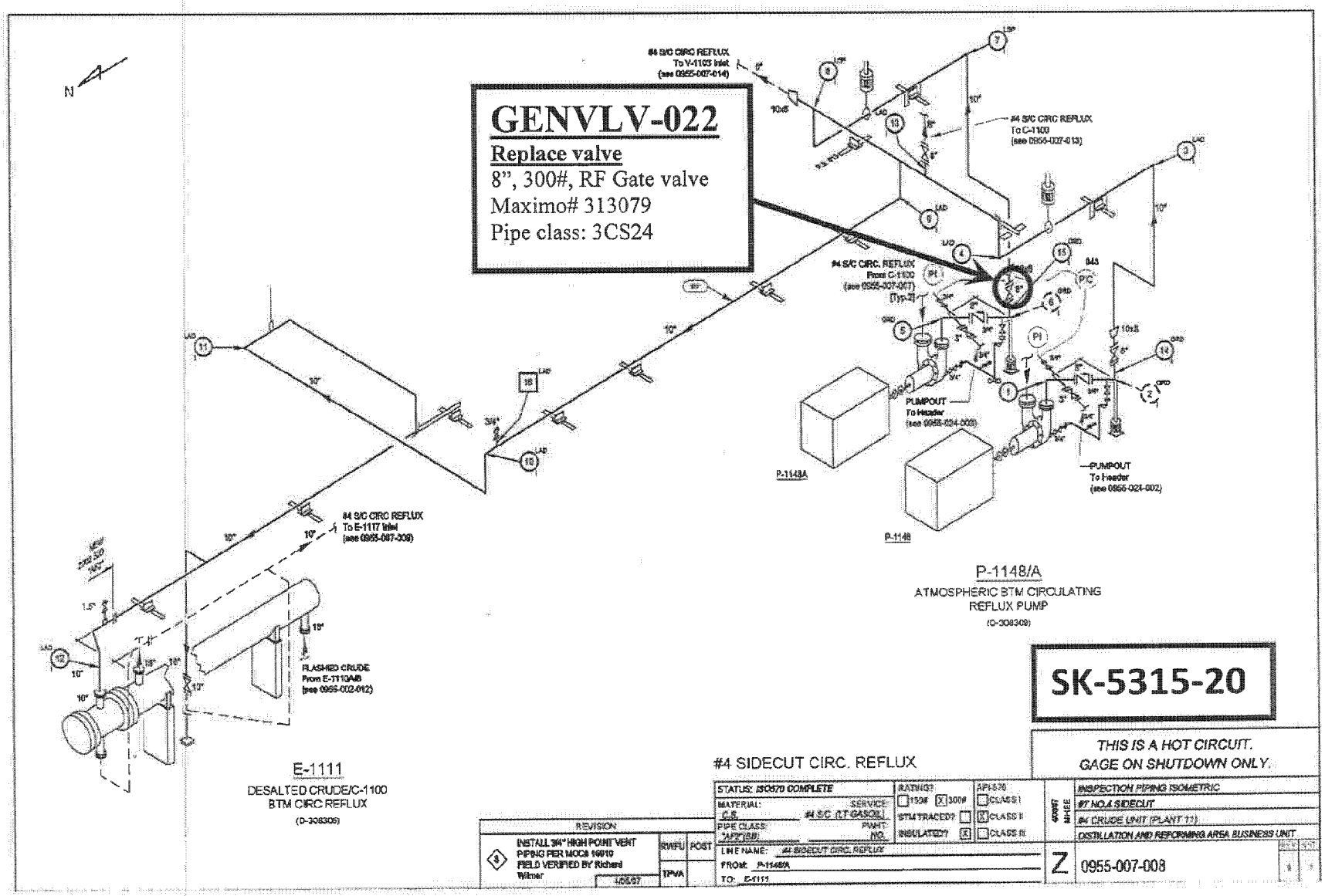
GENVLV-022
Replace valve
8", 300#, RF Gate valve
Maximo# 313079
Pipe class: 3CS24
N
#4 S/C CIRC REFLUX To V-1103 Inlet (see 0955-007-014)
#4 S/C CIRC REFLUX To C-1100 (see 0955-007-013)
#4 S/C CIRC. REFLUX From C-1100 (see 0955-007-007) [Typ.2]
PUMPOUT To Header (see 0955-024-009)
PUMPOUT To Header (see 0955-024-002)
P-1148A
P-1148
#4 S/C CIRC REFLUX To E-1117 Inlet (see 0955-007-009)
FLASHED CRUDE From E-1110A/B (see 0955-002-012)
P-1148/A
ATMOSPHERIC BTM CIRCULATING REFLUX PUMP
(D-308309)
E-1111
DESALTED CRUDE/C-1100 BTM CIRC REFLUX
(D-308309)
SK-5315-20
THIS IS A HOT CIRCUIT. GAGE ON SHUTDOWN ONLY.
#4 SIDECUT CIRC. REFLUX
STATUS: ISO570 COMPLETE
MATERIAL: C.S.
SERVICE: #4 S.C. (LT GASOIL)
PIPE CLASS: 3AF2 (BB)
PWHT: NO
RATING? 150# X 300#
STM TRACED? INSULATED?
API-570 CLASS I CLASS II CLASS III
INSPECTION PIPING ISOMETRIC
#7 NO.4 SIDECUT
#4 CRUDE UNIT (PLANT 11)
DISTILLATION AND REFORMING AREA BUSINESS UNIT
REVISION
INSTALL 3/4" HIGH POINT VENT PIPING PER MOC# 16910 FIELD VERIFIED BY Richard Wilmer
4/05/07
RWFU POST
TPVA
LINE NAME: #4 SIDECUT CIRC. REFLUX
FROM: P-1148/A
TO: E-1111
Z
0955-007-008

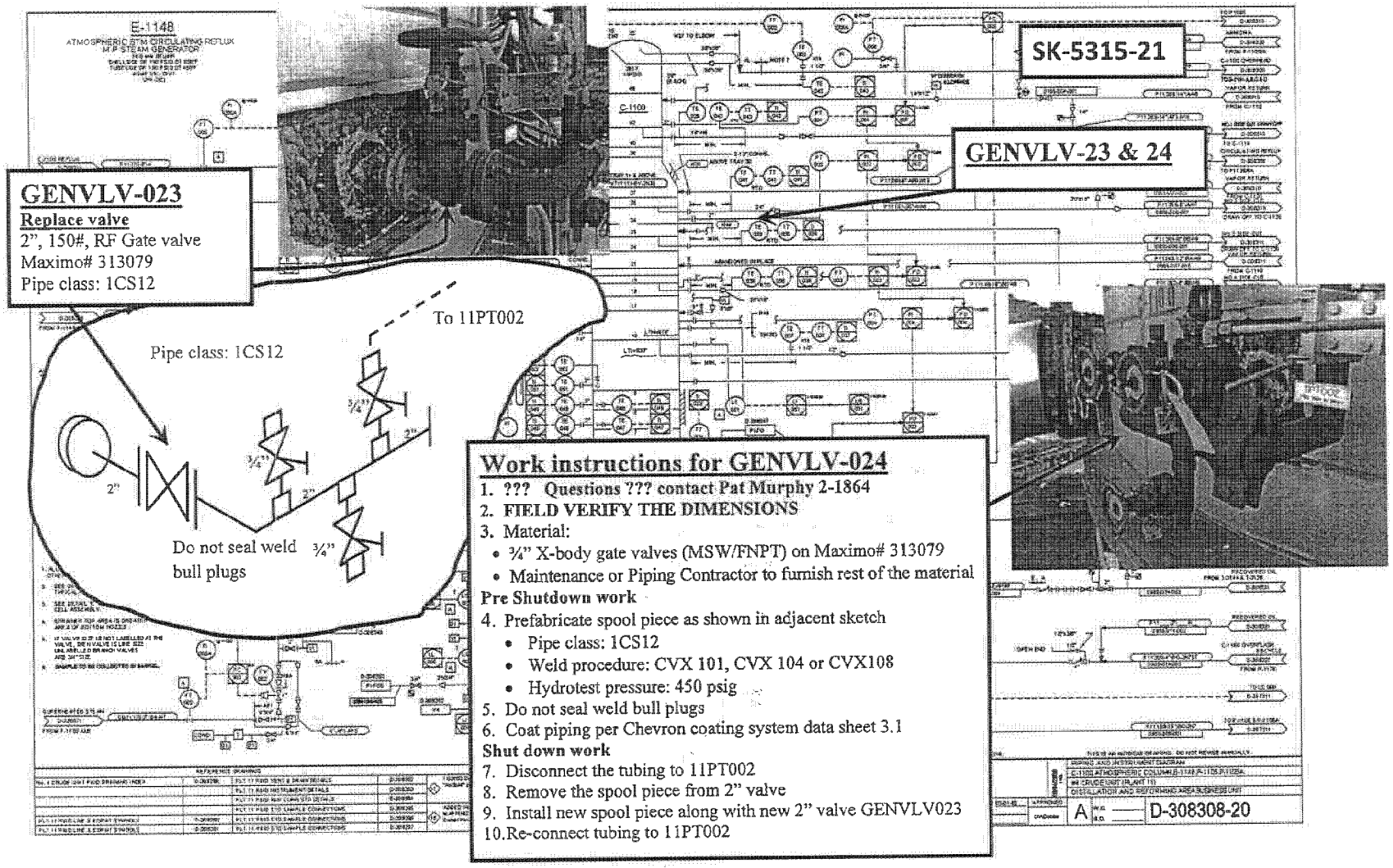

Work instructions for GENVLV-024

1. ??? Questions ??? contact Pat Murphy 2-1864
2. **FIELD VERIFY THE DIMENSIONS**
3. Material:
   - ¾" X-body gate valves (MSW/FNPT) on Maximo# 313079
   - Maintenance or Piping Contractor to furnish rest of the material

Pre Shutdown work

4. Prefabricate spool piece as shown in adjacent sketch
   - Pipe class: 1CS12
   - Weld procedure: CVX 101, CVX 104 or CVX108
   - Hydrotest pressure: 450 psig
5. Do not seal weld bull plugs
6. Coat piping per Chevron coating system data sheet 3.1

Shut down work

7. Disconnect the tubing to 11PT002
8. Remove the spool piece from 2" valve
9. Install new spool piece along with new 2" valve GENVLV023
10. Re-connect tubing to 11PT002

SK-5315-22

Work Instructions For GENVLV-25
1. ??? Questions ??? contact Pat Murphy
2. Materials:
-1 1/2" Gate valve. Maximo # 313079
3. Shut Down Work:
-Cut the existing valve out and replace in kind.
-Pipe Class 1CS23
-Weld Procedure CVX-101
-Hydrotest to 310 with valves closed.
-Coat pipe per chevron coating system data sheet 12.1

REV 2

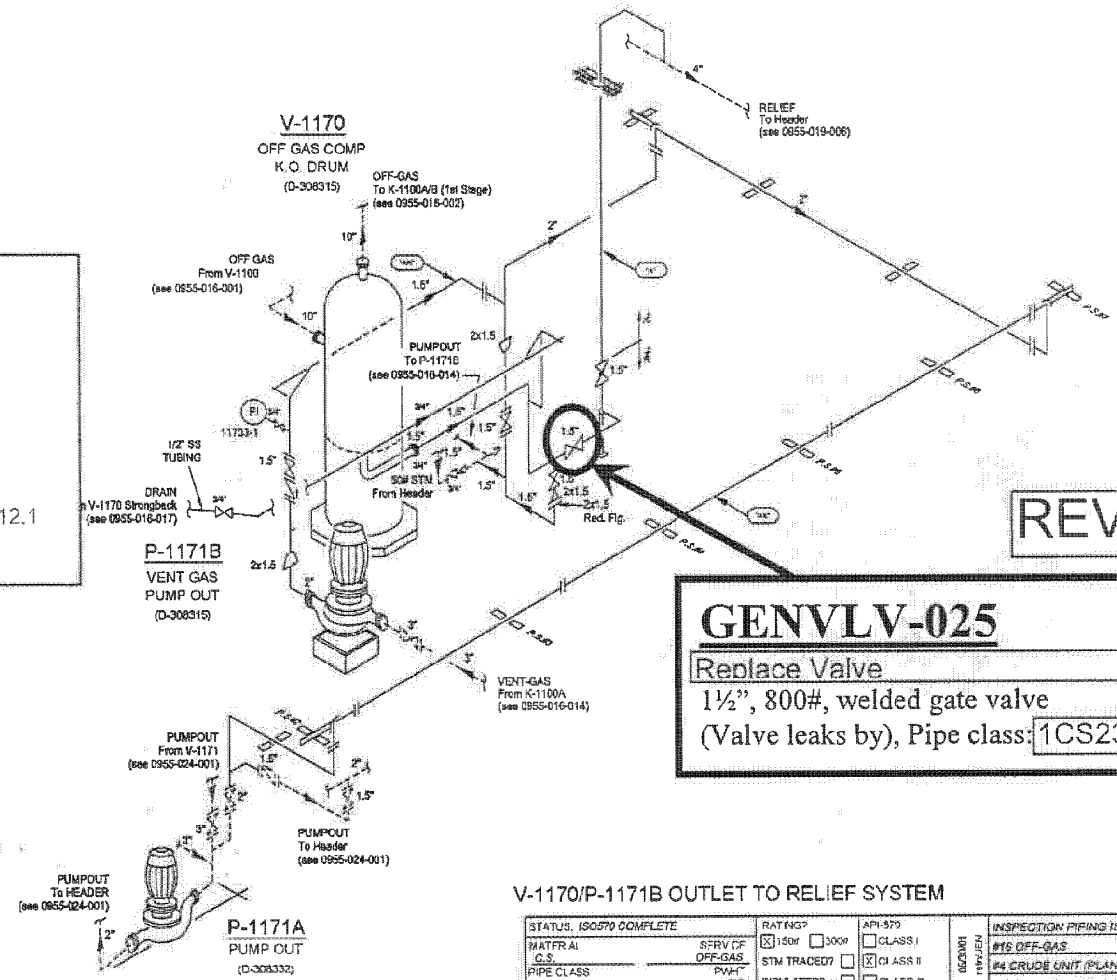

REV 2

GENVLV-025

Replace Valve

1½", 800#, welded gate valve

(Valve leaks by), Pipe class: 1CS23

V-1170/P-1171B OUTLET TO RELIEF SYSTEM

STATUS: ISO570 COMPLETE	RATING?	API-570	05/20/01	INSPECTION PIPING ISOMETRIC
MATFR AI C.S. / SERV OF OFF-GAS	[X] 150# [ ] 300#	[ ] CLASS I		#16 OFF-GAS
PIPE CLASS "AB4"(AKV"A"(ABO) / PWH NO.	STM TRACED? [ ]	[X] CLASS II		#4 CRUDE UNIT (PLANT 11)
	INSULATED? [ ]	[ ] CLASS III		DISTILLATION AND REFORMING AREA BUSINESS UNIT
LINE NAME: V-1170/P-1171B OUTLET TO RELIEF SYSTEM				
PROV: V-1170/P-1171B	Z			0955-016-015 (REV 1, SHT 1)
TO RELIEF HEADER				

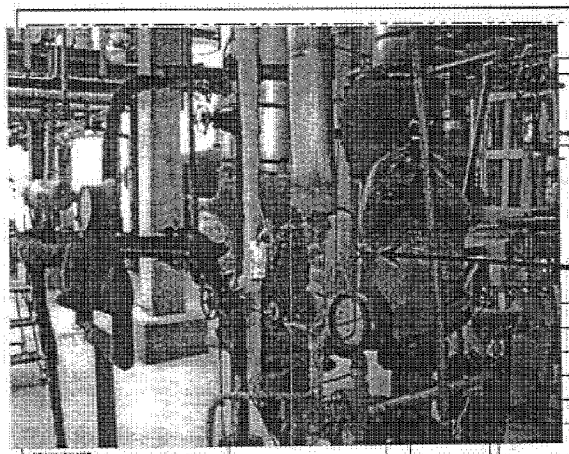

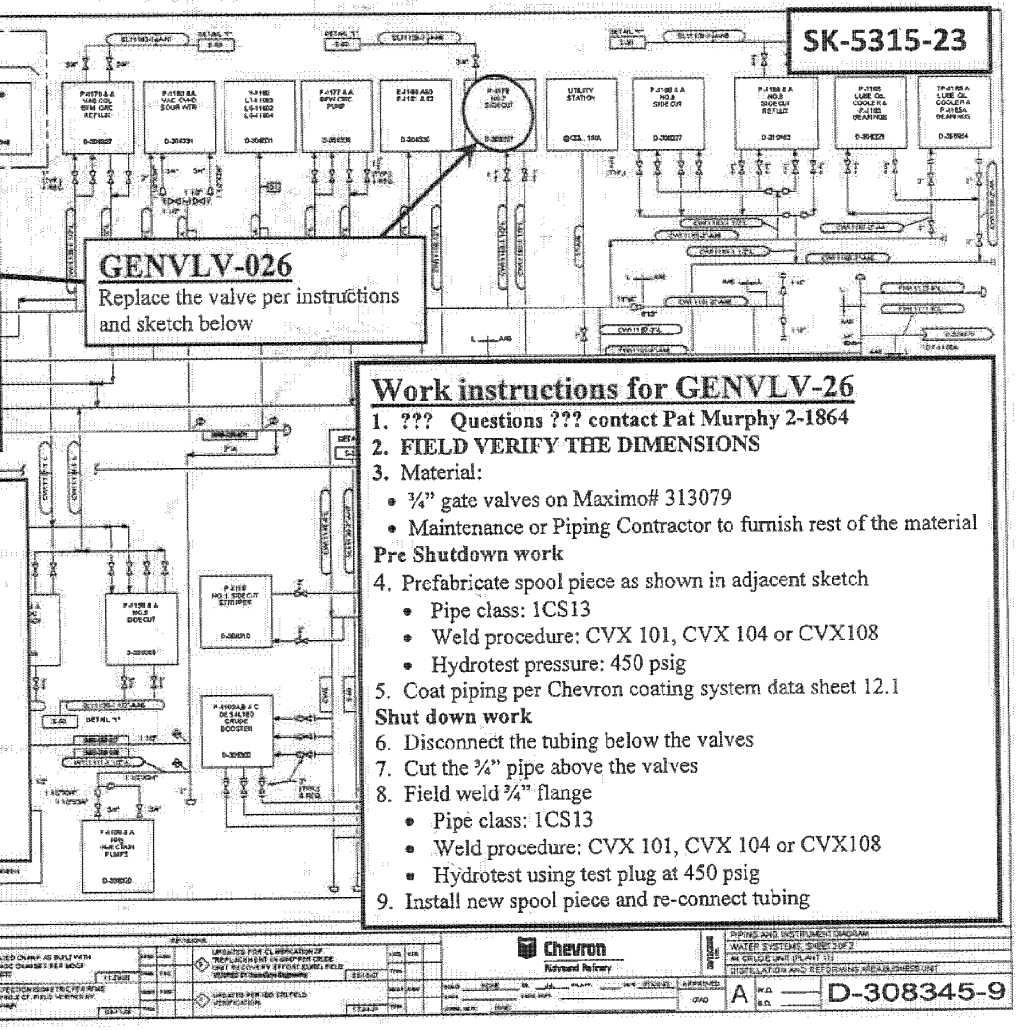

Work instructions for GENVLV-26

1. ??? Questions ??? contact Pat Murphy 2-1864
2. **FIELD VERIFY THE DIMENSIONS**
3. Material:
   - ¾" gate valves on Maximo# 313079
   - Maintenance or Piping Contractor to furnish rest of the material

Pre Shutdown work

4. Prefabricate spool piece as shown in adjacent sketch
   - Pipe class: 1CS13
   - Weld procedure: CVX 101, CVX 104 or CVX108
   - Hydrotest pressure: 450 psig
5. Coat piping per Chevron coating system data sheet 12.1

Shut down work

6. Disconnect the tubing below the valves
7. Cut the ¾" pipe above the valves
8. Field weld ¾" flange
   - Pipe class: 1CS13
   - Weld procedure: CVX 101, CVX 104 or CVX108
   - Hydrotest using test plug at 450 psig
9. Install new spool piece and re-connect tubing

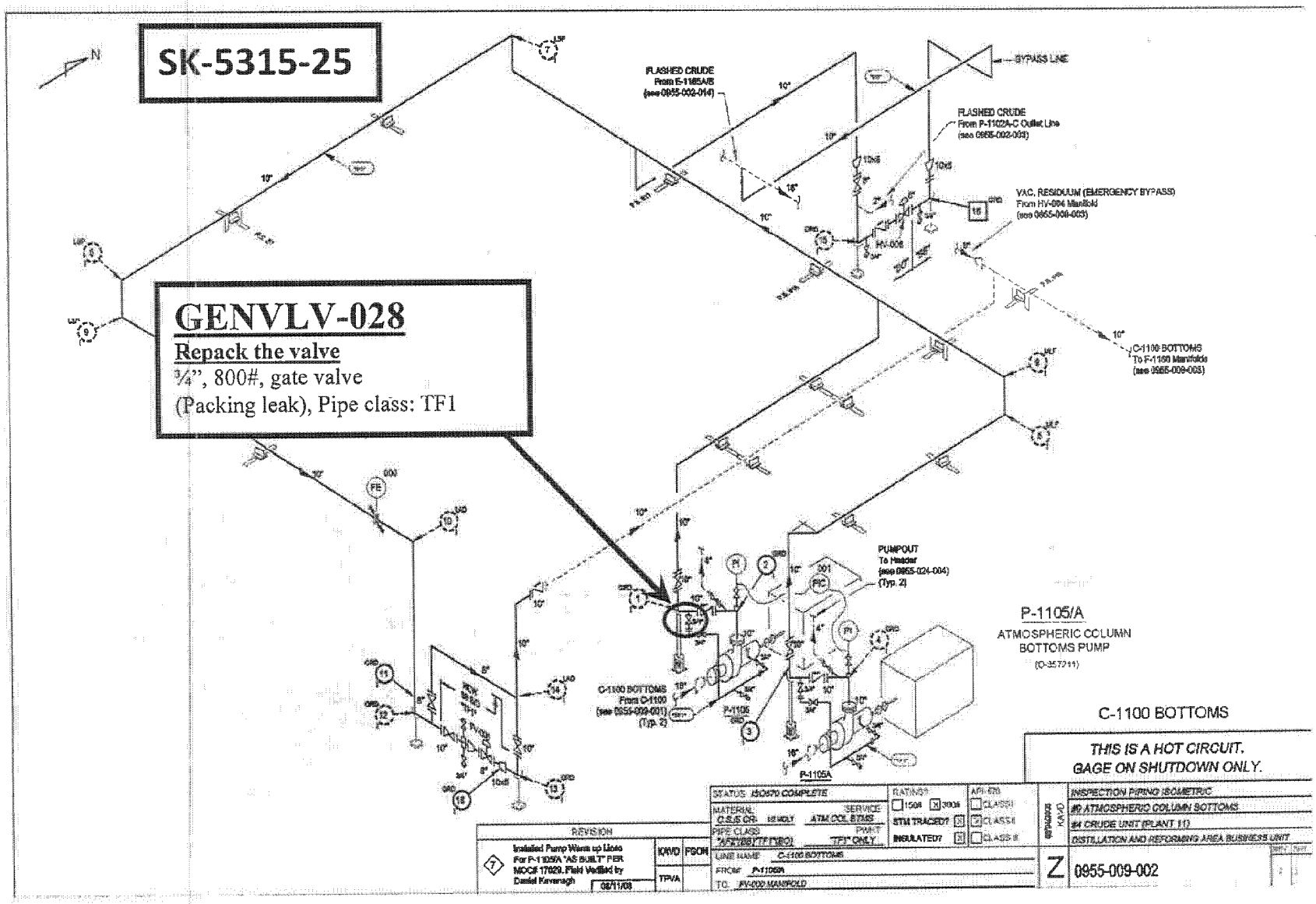
SK-5315-25
GENVLV-028
Repack the valve
¾", 800#, gate valve
(Packing leak), Pipe class: TF1
FLASHED CRUDE
From E-1105A/B
(see 0955-002-014)
BYPASS LINE
FLASHED CRUDE
From P-1102A-C Outlet Line
(see 0955-002-003)
VAC. RESIDUUM (EMERGENCY BYPASS)
From HV-004 Manifold
(see 0955-009-003)
C-1100 BOTTOMS
To F-1100 Manifolds
(see 0955-009-003)
PUMPOUT
To Header
(see 0955-024-004)
(Typ. 2)
C-1100 BOTTOMS
From C-1100
(see 0955-009-001)
(Typ. 2)
P-1105/A
ATMOSPHERIC COLUMN
BOTTOMS PUMP
(D-357211)
C-1100 BOTTOMS
THIS IS A HOT CIRCUIT.
GAGE ON SHUTDOWN ONLY.
REVISION
Installed Pump Warm up Lines For P-1105/A "AS BUILT" PER MOC# 17029. Field Verified by Daniel Kavanagh
06/11/08
IQWD
FSON
TPVA
STATUS: ISO670 COMPLETE
MATERIAL: C.S.S.(CR)
SERVICE: ATM COL BTMS
PIPE CLASS: "A"(CS)/"TF"(NEO)
PWHT: "TF1" ONLY
LINE NAME: C-1100 BOTTOMS
FROM: P-1105A
TO: HV-002 MANIFOLD
RATING: 150# 300#
STM TRACED? INSULATED?
API-570: CLASS I CLASS II CLASS III
INSPECTION PIPING ISOMETRIC
#2 ATMOSPHERIC COLUMN BOTTOMS
#4 CRUDE UNIT (PLANT 11)
DISTILLATION AND REFORMING AREA BUSINESS UNIT
Z
0955-009-002

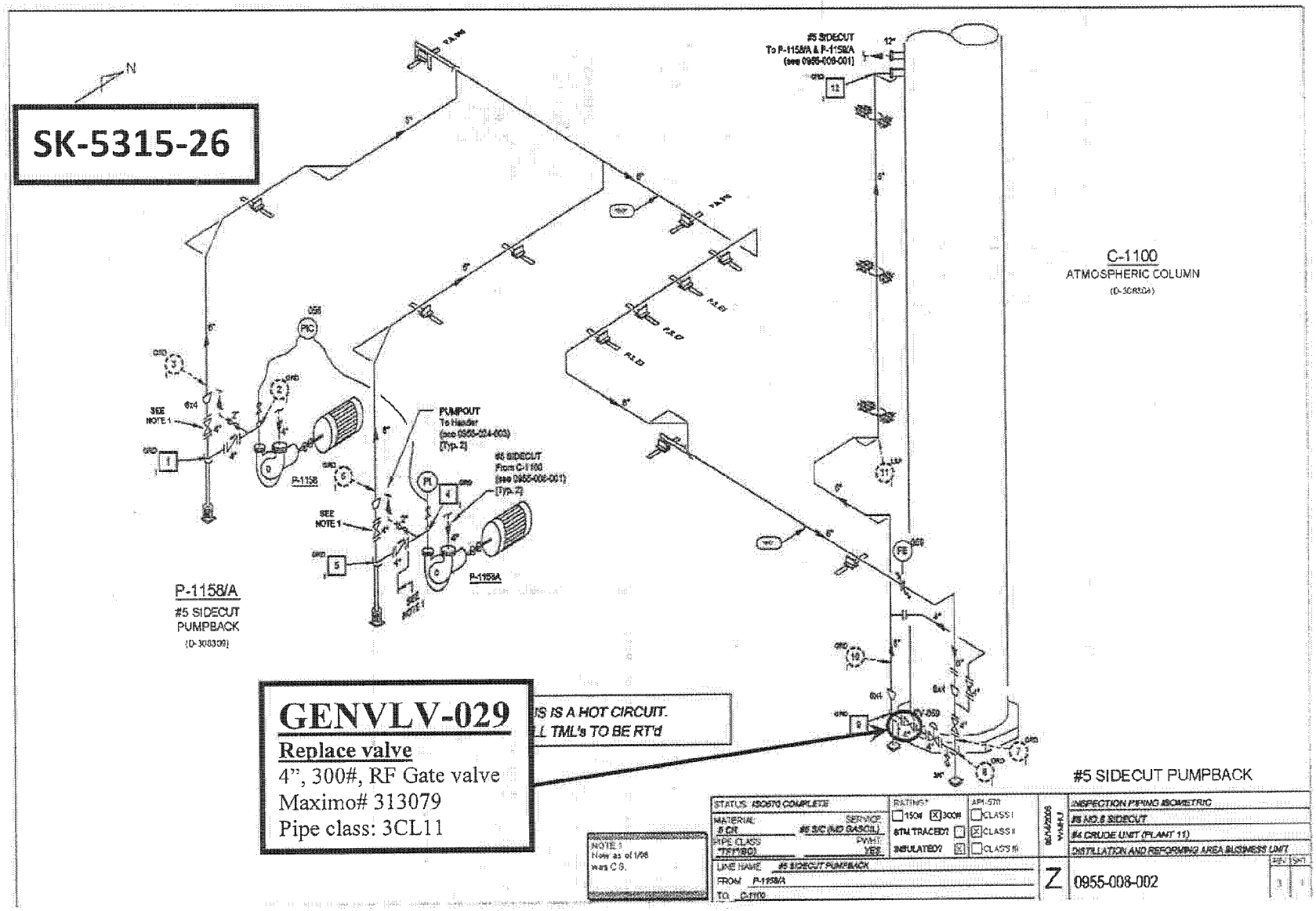
SK-5315-26
N
#5 SIDECUT
To P-1158/A & P-1159/A
(see 0955-008-001)
C-1100
ATMOSPHERIC COLUMN
(D-308309)
PUMPOUT
To Header
(see 0955-024-003)
(Typ. 2)
#5 SIDECUT
From C-1100
(see 0955-008-001)
(Typ. 2)
SEE NOTE 1
P-1158
P-1159A
P-1158/A
#5 SIDECUT
PUMPBACK
(D-308309)
GENVLV-029
Replace valve
4", 300#, RF Gate valve
Maximo# 313079
Pipe class: 3CL11
IS IS A HOT CIRCUIT.
L TML's TO BE RT'd
#5 SIDECUT PUMPBACK
NOTE 1
Now as of 1/96
was C 5.
STATUS: ISO570 COMPLETE
MATERIAL: 5 CR
SERVICE: #5 S/C (MD SASCL)
PIPE CLASS: 3CL11
PWHT: YES
RATING? 150# 300#
STM TRACED? INSULATED?
API-570 CLASS I CLASS II CLASS III
LINE NAME #5 SIDECUT PUMPBACK
FROM P-1158/A
TO C-1100
INSPECTION PIPING ISOMETRIC
#5 NO.5 SIDECUT
#4 CRUDE UNIT (PLANT 11)
DISTILLATION AND REFORMING AREA BUSINESS UNIT
0955-008-002

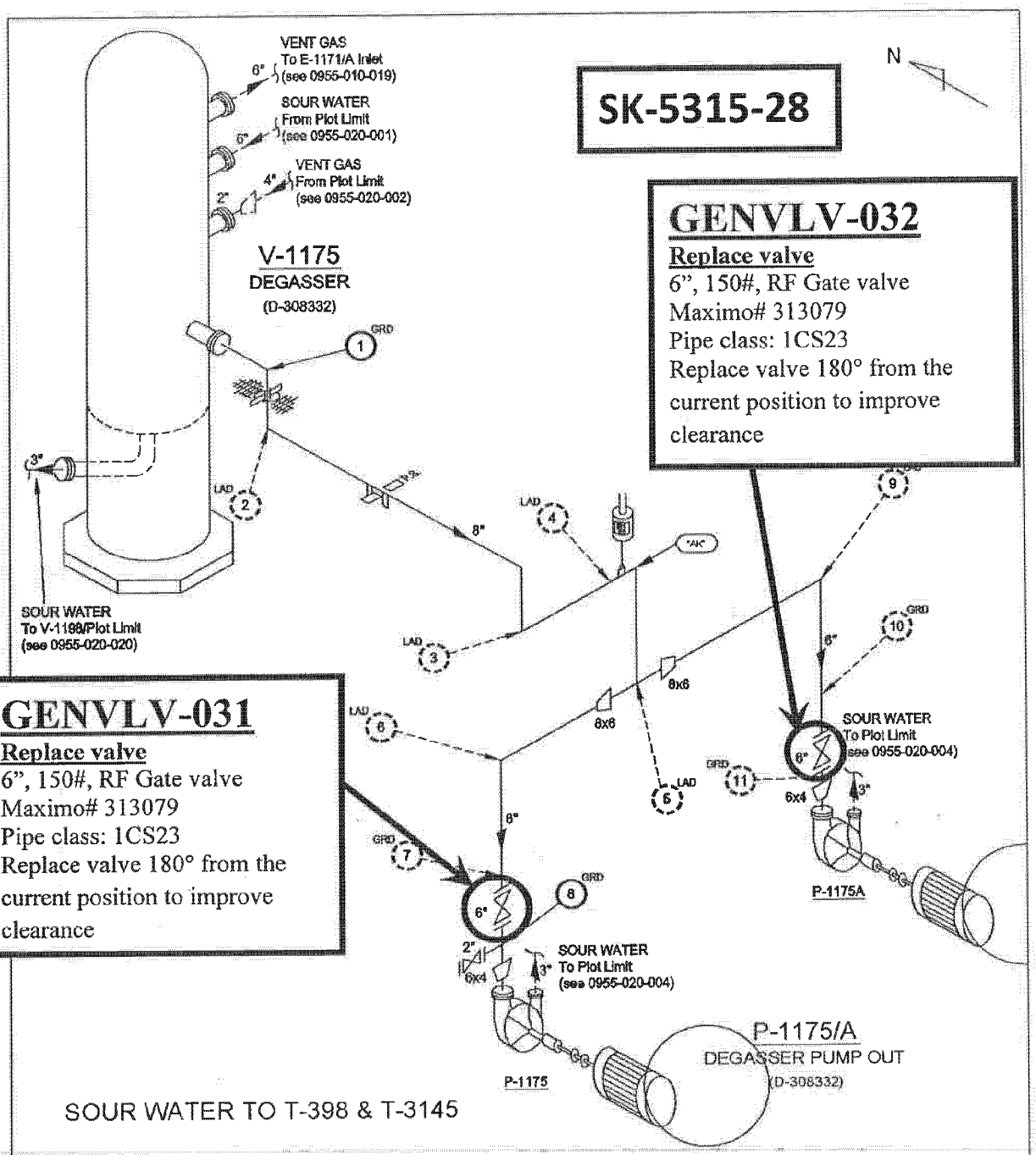

STATUS: *ISO570 COMPLETE*	RATING? [X] 150# [ ] 300#	API-570 [ ] CLASS I	07/12/01 tsh/JEN	*INSPECTION PIPING ISOMETRIC*
MATERIAL: *C.S.* SERVICE: *SOUR WATER*	STM TRACED? [ ]	[X] CLASS II		*#20 SOUR WATER*
PIPE CLASS: *"AB4"(AK)* PWHT: *NO*	INSULATED? [ ]	[ ] CLASS III		*#4 CRUDE UNIT (PLANT 11)*
				DISTILLATION AND REFORMING AREA BUSINESS UNIT
LINE NAME: *SOUR WATER TO T-398 & T-3145*			Z	0955-020-003 (REV 1, SHT 1)
FROM: *V-1175*				
TO: *P-1175/A*				

Work instructions for GENVLV-033

1. ??? Questions ??? contact Pat Murphy 2-1864
2. **FIELD VERIFY THE DIMENSIONS**
3. Material:
   - ¾" gate valve (FNPT both ends) on Maximo# 313079
   - Maintenance or Piping Contractor to furnish rest of the material

Pre Shutdown work

4. Prefabricate spool piece as shown in adjacent sketch
   - Pipe class: 1CS13
   - Weld procedure: CVX 101, CVX 104 or CVX108
   - Hydrotest pressure: 450 psig
5. Coat piping per Chevron coating system data sheet 12.1

Shut down work

6. Disconnect the tubing downstream of valve and disconnect the valve from the steam trap
7. Connect the spool to the existing steam trap and connect existing tubing downstream of new valve

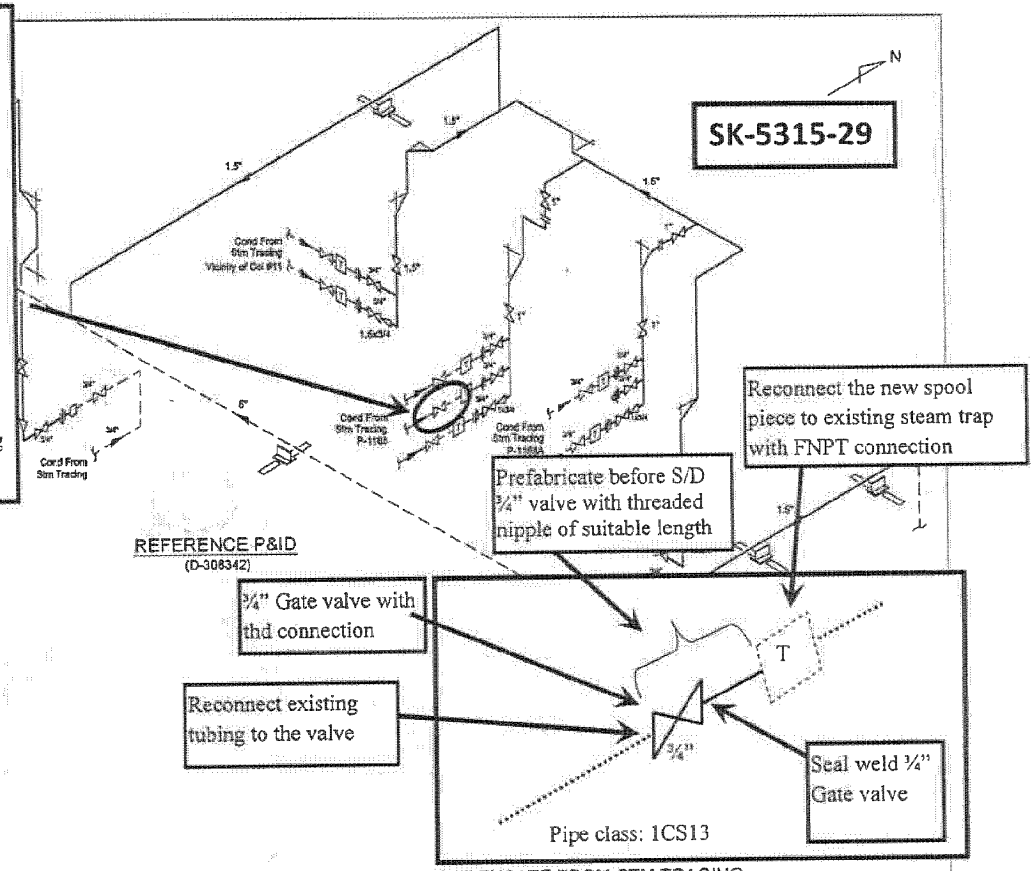

CUSA-CSB-0019023
EPA

SK-5315-30

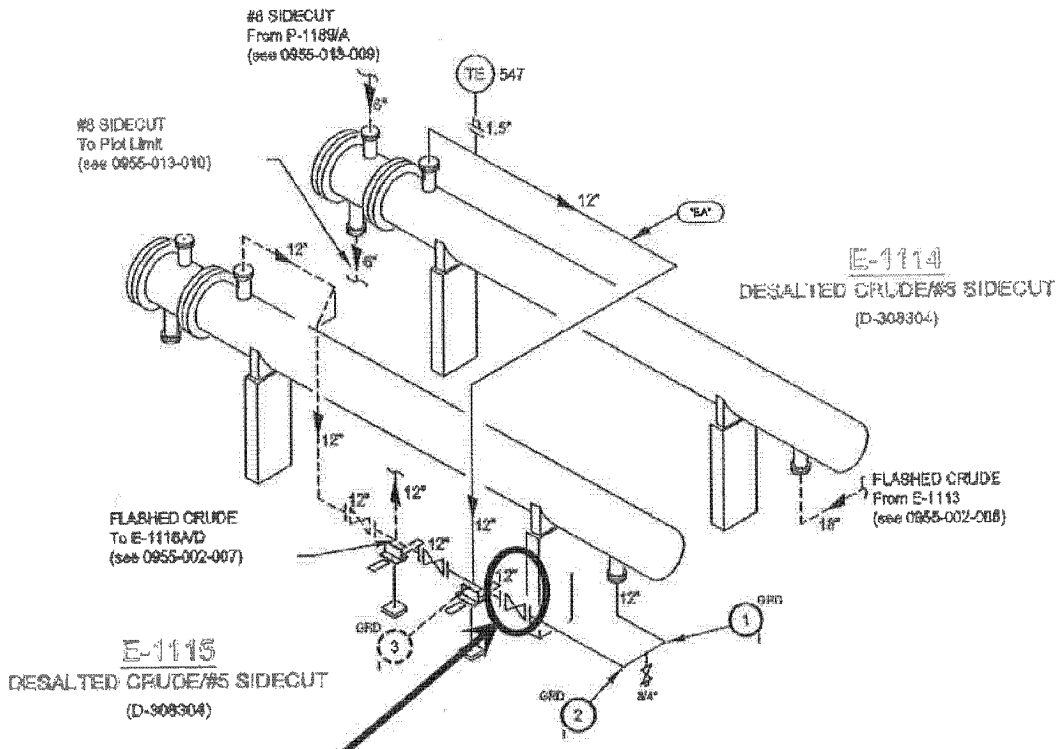

GENVLV-034

Replace valve

12", 300#, RF Gate valve

Maximo# 313079

Pipe class: 3CS11

V-1103 DESALTED CRUDE

STATUS: ISO570 COMPLETE	RATING? ☐ 150# ☒ 300#	API-570 ☐ CLASS I	07/19/01 NEW/ISUE	INSPECTION PIPING ISOMETRIC
MATERIAL: C.S. / SERVICE: DESALTED CRUDE	STM TRACED? ☐	☒ CLASS II		#2 DESALTED CRUDE
PIPE CLASS: 3AP11(B4) / PWHT: NO	INSULATED? ☒	☐ CLASS III		#4 CRUDE UNIT (PLANT 11)
				DISTILLATION AND REFORMING AREA BUSINESS UNIT
LINE NAME: V-1103 DESALTED CRUDE			N	0955-002-005
FROM: E-1114				
TO: E-1115				

REV	SHT
2	1

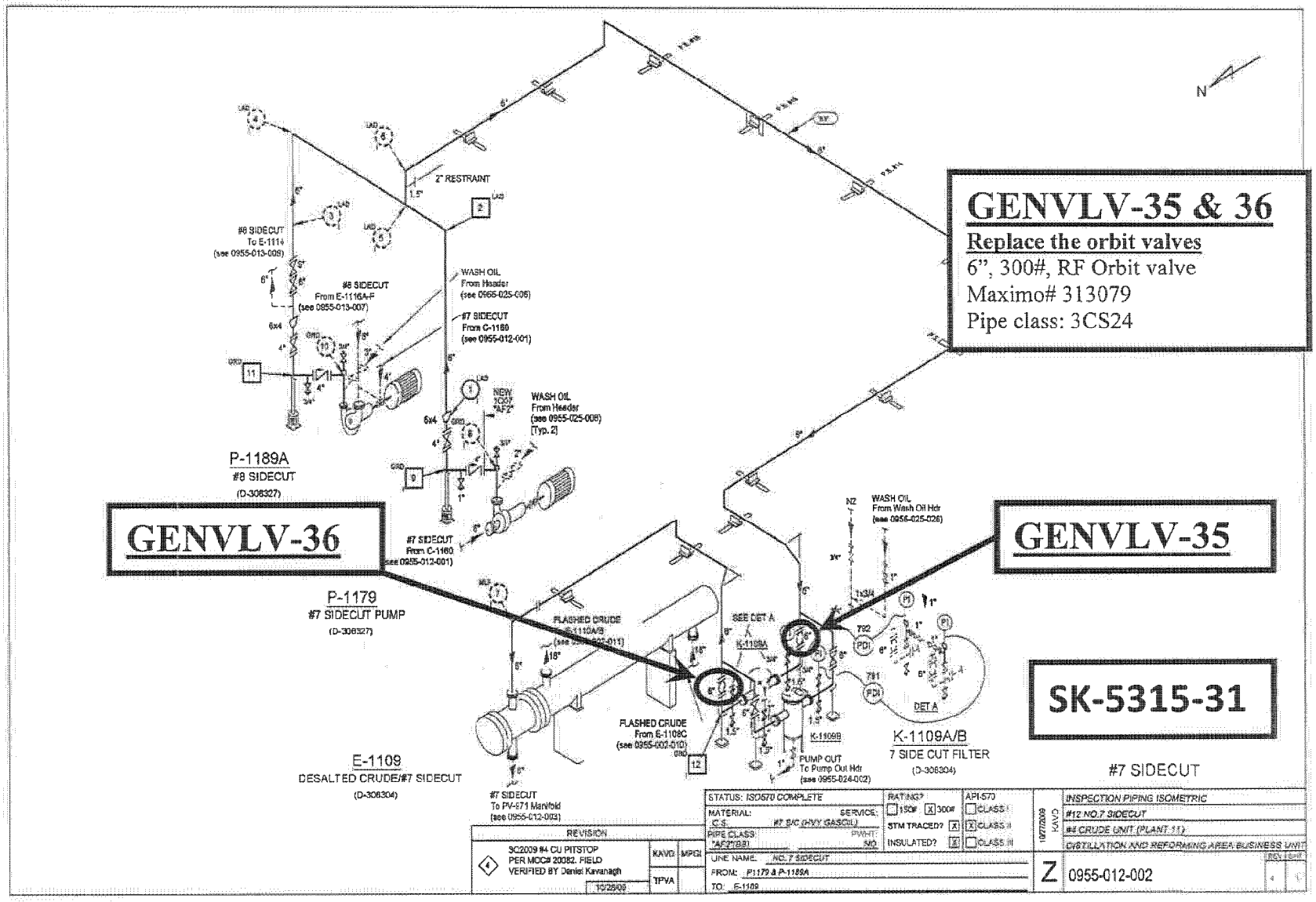
GENVLV-35 & 36
Replace the orbit valves
6", 300#, RF Orbit valve
Maximo# 313079
Pipe class: 3CS24
GENVLV-36
GENVLV-35
SK-5315-31
P-1189A
#8 SIDECUT
(D-306327)
P-1179
#7 SIDECUT PUMP
(D-306327)
E-1109
DESALTED CRUDE/#7 SIDECUT
(D-306304)
K-1109A/B
7 SIDE CUT FILTER
(D-306304)
#7 SIDECUT
2" RESTRAINT
#8 SIDECUT
To E-1114
(see 0955-013-009)
#8 SIDECUT
From E-1116A-F
(see 0955-013-007)
WASH OIL
From Header
(see 0955-025-006)
#7 SIDECUT
From C-1160
(see 0955-012-001)
WASH OIL
From Header
(see 0955-025-006)
[Typ. 2]
#7 SIDECUT
From C-1160
(see 0955-012-001)
WASH OIL
From Wash Oil Hdr
(see 0956-025-026)
FLASHED CRUDE
From E-1108C
(see 0955-002-010)
PUMP OUT
To Pump Out Hdr
(see 0955-024-002)
#7 SIDECUT
To PV-671 Manifold
(see 0955-012-003)
SEE DET A
DET A
K-1109A
K-1109B
N
STATUS: ISO570 COMPLETE
MATERIAL:
SERVICE:
C.S.
#7 S/C (HVY GASOIL)
PIPE CLASS:
PWHT:
NO
UNE NAME: NO. 7 SIDECUT
FROM: P1179 & P-1189A
TO: E-1109
RATING?
150#
300#
STM TRACED?
INSULATED?
API-570
CLASS I
CLASS II
CLASS III
INSPECTION PIPING ISOMETRIC
#12 NO.7 SIDECUT
#4 CRUDE UNIT (PLANT 11)
DISTILLATION AND REFORMING AREA BUSINESS UNIT
Z
0955-012-002
REVISION
SC2009 #4 CU PITSTOP
PER MOC# 20082. FIELD
VERIFIED BY Daniel Kavanagh
10/28/09
KAVD
MPGI
TPVA

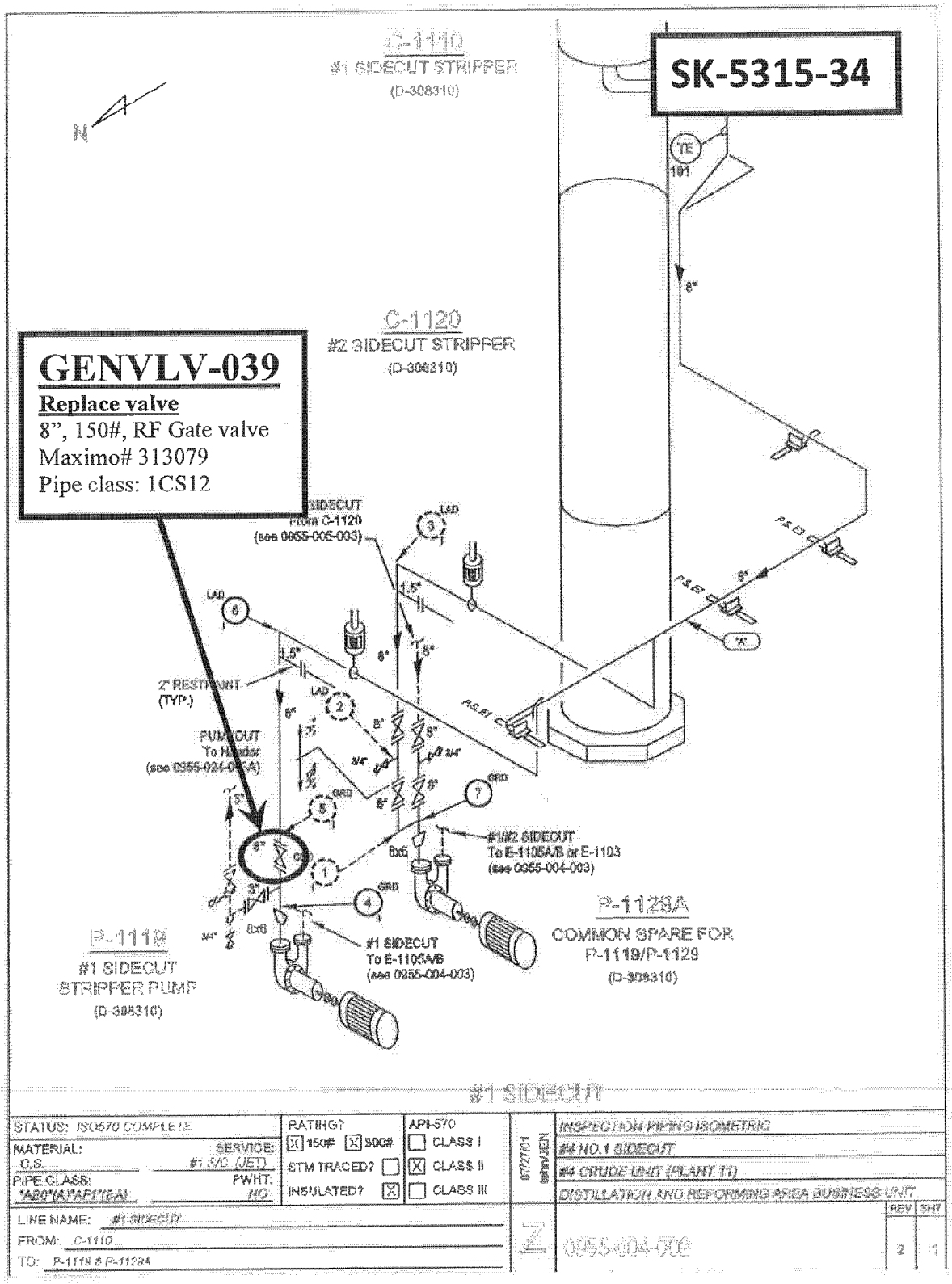
SK-5315-34
C-1110
#1 SIDECUT STRIPPER
(D-308310)
C-1120
#2 SIDECUT STRIPPER
(D-308310)
GENVLV-039
Replace valve
8", 150#, RF Gate valve
Maximo# 313079
Pipe class: 1CS12
SIDECUT
From C-1120
(see 0955-005-003)
2" RESTRICTIONS
(TYP.)
PUMPOUT
To Header
(see 0955-024-004A)
#1/#2 SIDECUT
To E-1105A/B or E-1103
(see 0955-004-003)
#1 SIDECUT
To E-1105A/B
(see 0955-004-003)
P-1119
#1 SIDECUT
STRIPPER PUMP
(D-308310)
P-1129A
COMMON SPARE FOR
P-1119/P-1129
(D-308310)
#1 SIDECUT
STATUS: ISO570 COMPLETE
MATERIAL: C.S.
SERVICE: #1 S/O (JET)
PIPE CLASS: *ABO*(A)*AF1*(EA)
PWHT: NO
RATING? 150# 300#
STM TRACED?
INSULATED?
API-570
CLASS I
CLASS II
CLASS III
INSPECTION PIPING ISOMETRIC
#4 NO.1 SIDECUT
#4 CRUDE UNIT (PLANT 11)
DISTILLATION AND REFORMING AREA BUSINESS UNIT
LINE NAME: #1 SIDECUT
FROM: C-1110
TO: P-1119 & P-1129A
0955-004-002
REV 2
SHT 1

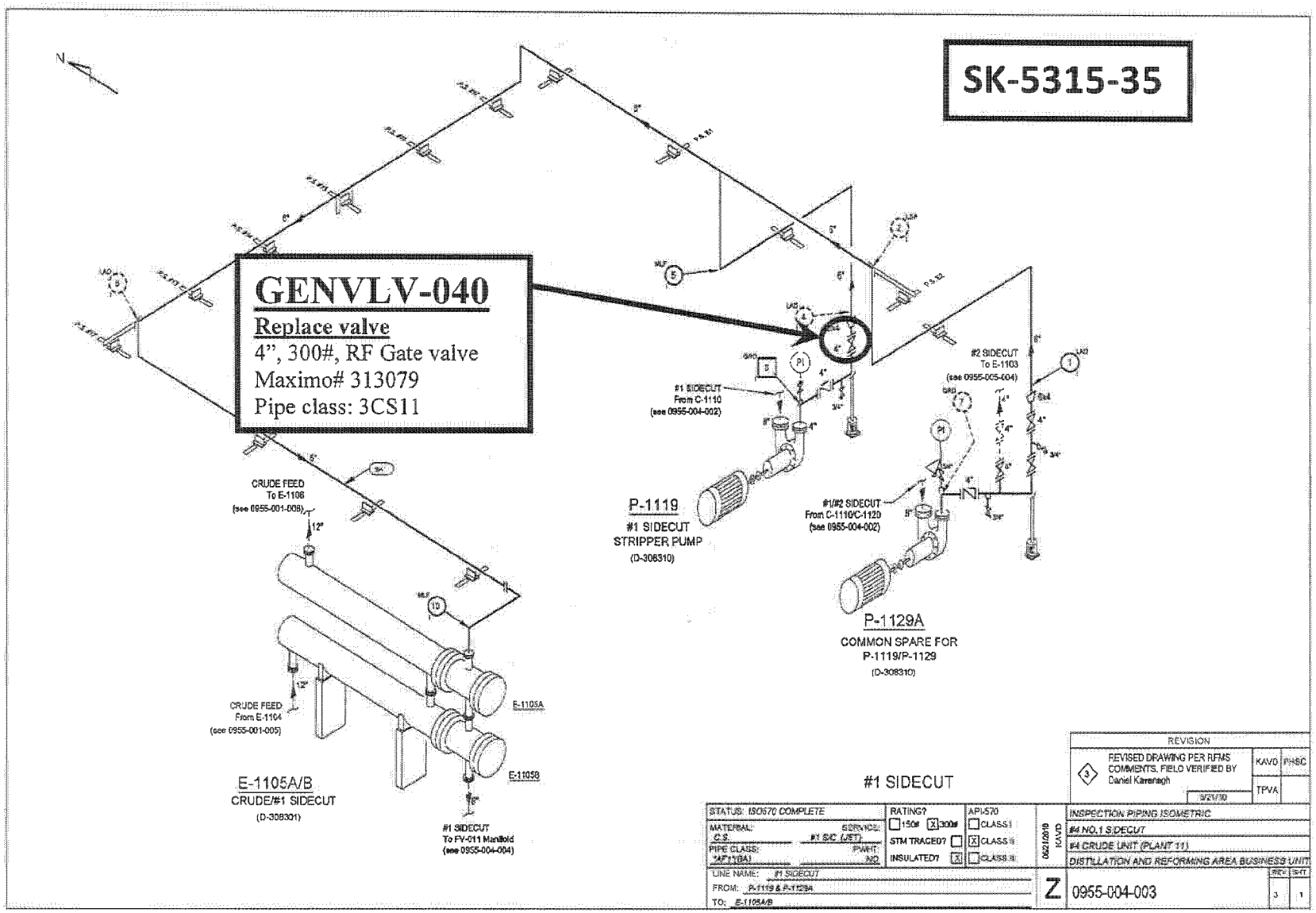
SK-5315-35
GENVLV-040
Replace valve
4", 300#, RF Gate valve
Maximo# 313079
Pipe class: 3CS11
CRUDE FEED
To E-1108
(see 0955-001-008)
CRUDE FEED
From E-1104
(see 0955-001-005)
E-1105A/B
CRUDE/#1 SIDECUT
(D-308301)
E-1105A
E-1105B
#1 SIDECUT
To FV-011 Manifold
(see 0955-004-004)
#1 SIDECUT
From C-1110
(see 0955-004-002)
P-1119
#1 SIDECUT
STRIPPER PUMP
(D-308310)
#2 SIDECUT
To E-1103
(see 0955-005-004)
#1/#2 SIDECUT
From C-1110/C-1120
(see 0955-004-002)
P-1129A
COMMON SPARE FOR
P-1119/P-1129
(D-308310)
REVISION
REVISED DRAWING PER RFMS COMMENTS, FIELD VERIFIED BY Daniel Kavanagh
KAVO
PHSC
TPVA
9/21/10
#1 SIDECUT
STATUS: ISO570 COMPLETE
MATERIAL: C.S.
SERVICE: #1 S/C (JET)
PIPE CLASS: 3AF11(BA)
PWHT: NO
RATING? 150# X 300#
STM TRACED? X
INSULATED? X
API-570 CLASS I X CLASS II CLASS III
INSPECTION PIPING ISOMETRIC
#4 NO.1 SIDECUT
#4 CRUDE UNIT (PLANT 11)
DISTILLATION AND REFORMING AREA BUSINESS UNIT
LINE NAME: #1 SIDECUT
FROM: P-1119 & P-1129A
TO: E-1105A/B
Z
0955-004-003
REV 3
SHT 1

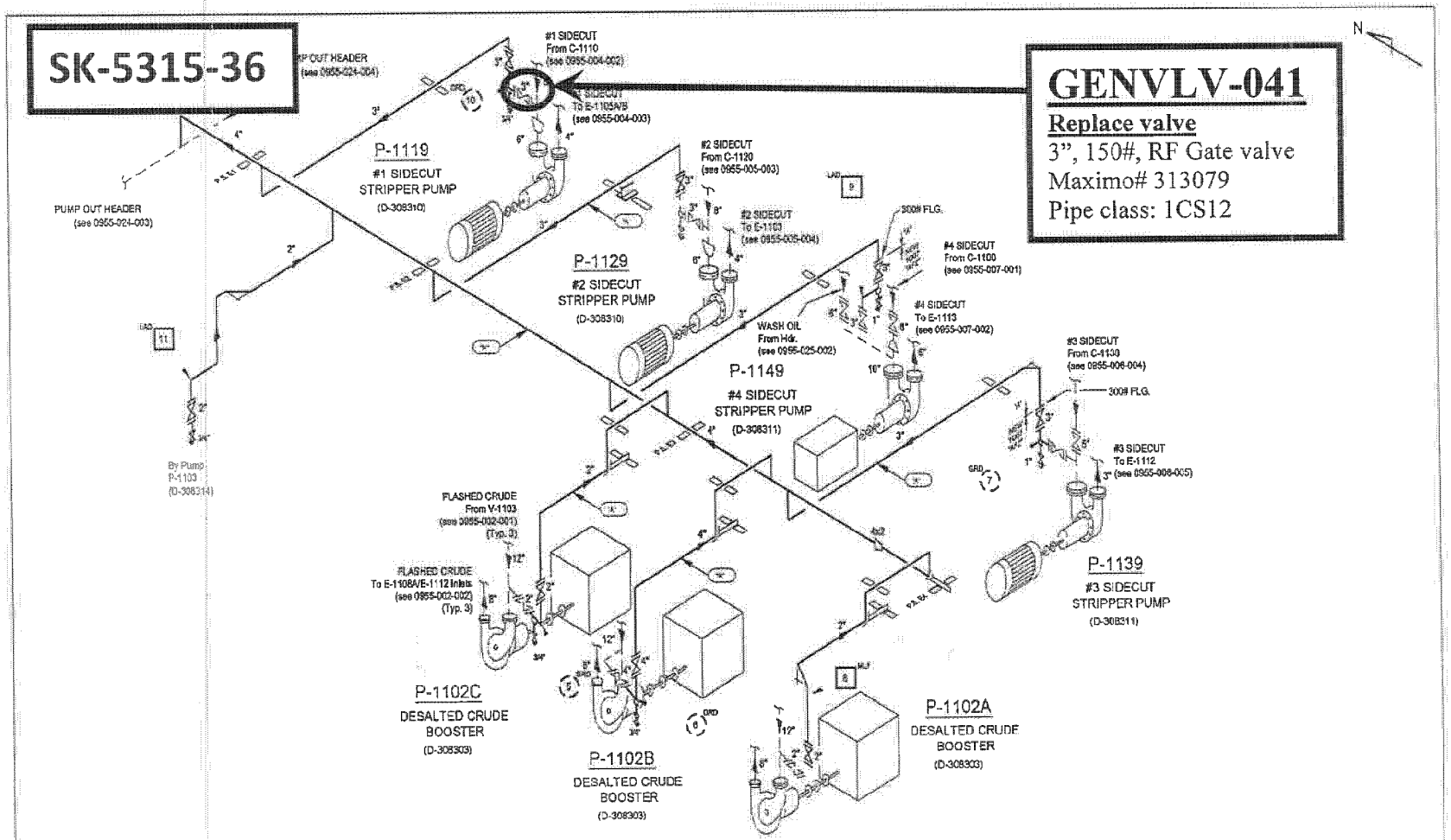

CUSA-CSB-0019028
EPA

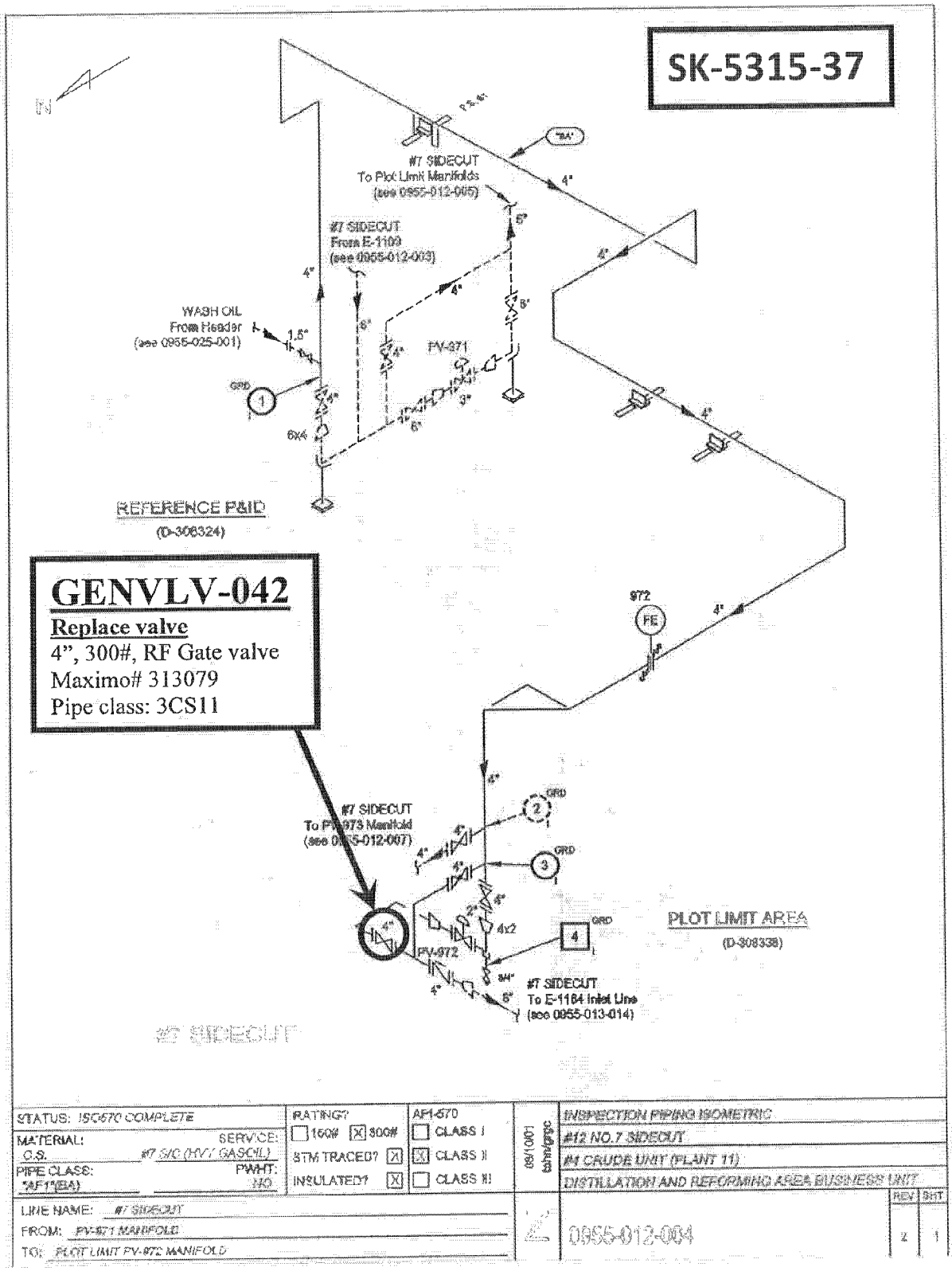

STATUS: ISO670 COMPLETE	RATING? ☐ 150# ☒ 300#	API-570 ☐ CLASS I	09/10/01	INSPECTION PIPING ISOMETRIC
MATERIAL: C.S. / SERVICE: #7 S/C (HVY GASOIL)	STM TRACED? ☒	☒ CLASS II		#12 NO.7 SIDECUT
PIPE CLASS: *AF1*(EA) / PWHT: NO	INSULATED? ☒	☐ CLASS III		#1 CRUDE UNIT (PLANT 11)
				DISTILLATION AND REFORMING AREA BUSINESS UNIT
LINE NAME: #7 SIDECUT				REV: 2 / SHT: 1
FROM: PV-971 MANIFOLD			0955-012-004	
TO: PLOT LIMIT PV-972 MANIFOLD				

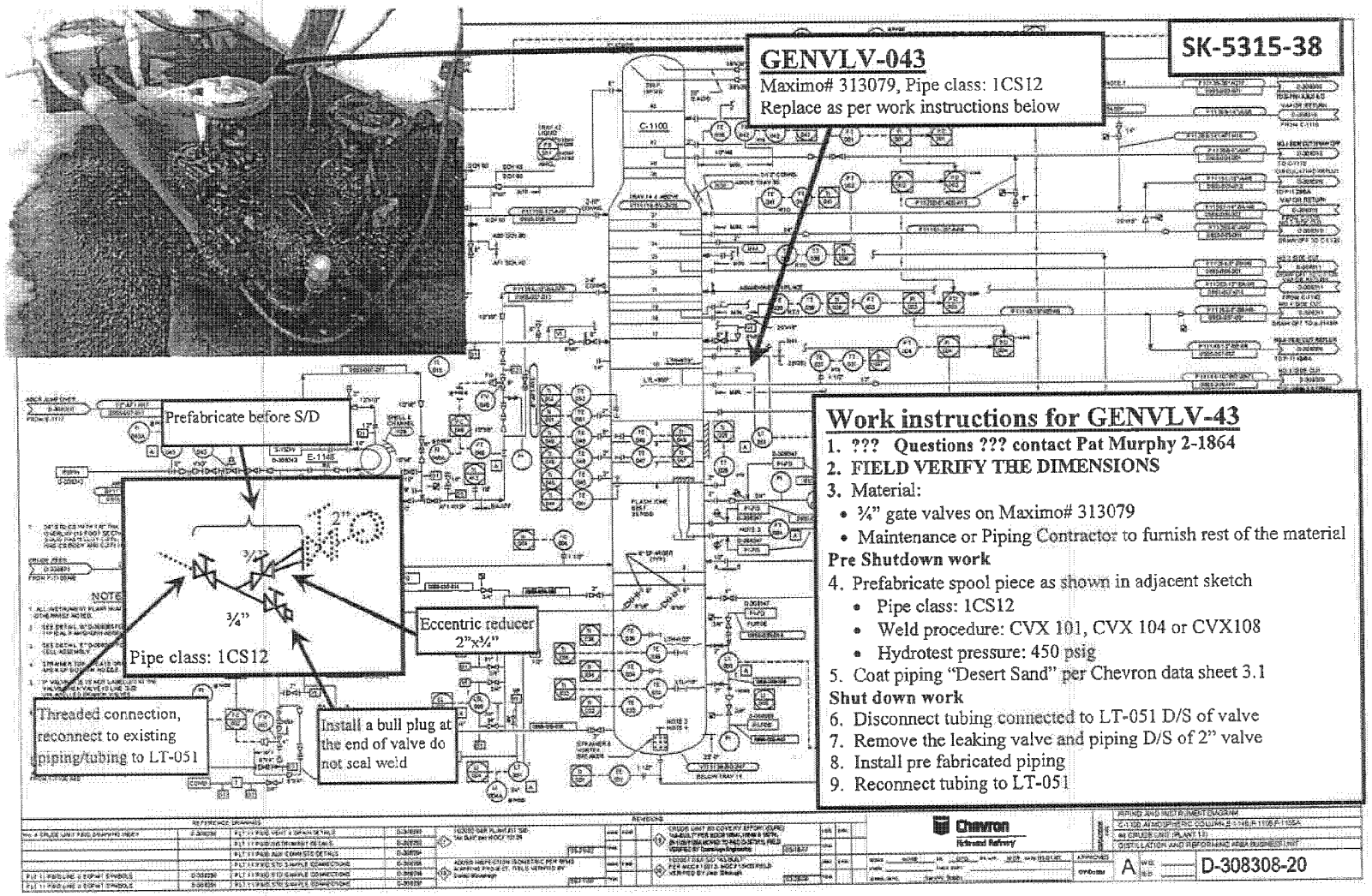

Work instructions for GENVLV-43

1. **??? Questions ??? contact Pat Murphy 2-1864**
2. **FIELD VERIFY THE DIMENSIONS**
3. Material:
   - ¾" gate valves on Maximo# 313079
   - Maintenance or Piping Contractor to furnish rest of the material

Pre Shutdown work

4. Prefabricate spool piece as shown in adjacent sketch
   - Pipe class: 1CS12
   - Weld procedure: CVX 101, CVX 104 or CVX108
   - Hydrotest pressure: 450 psig
5. Coat piping "Desert Sand" per Chevron data sheet 3.1

Shut down work

6. Disconnect tubing connected to LT-051 D/S of valve
7. Remove the leaking valve and piping D/S of 2" valve
8. Install pre fabricated piping
9. Reconnect tubing to LT-051

Work instructions

1. ??? **Questions ??? contact Pat Murphy 2-1864**
2. **FIELD VERIFY THE DIMENSIONS**
3. Material:
   - Valves procured on Maximo# 313079
   - Maintenance or Piping Contractor to furnish rest of the piping material

Pre Shutdown work

4. Prefabricate Sarco pot inlet and outlet piping spool pieces as shown in adjacent sketches
   - Pipe class: 1CS21
   - Weld procedure: CVX 101, CVX 104 or CVX108
   - Hydrotest pressure: 450 psig
5. Coat piping "Desert Sand" per Chevron data sheet 3.1

Shut down work

6. Cut the 1" Sarco pot inlet and outlet piping at suitable location.
7. Field weld 1" flange on the inlet and outlet piping and hydrotest using test plug.
   - Pipe class: 1CS21
   - Weld procedure: CVX 101, CVX 104 or CVX108
   - Hydrotest pressure: 450 psig
8. Install pre fabricated piping

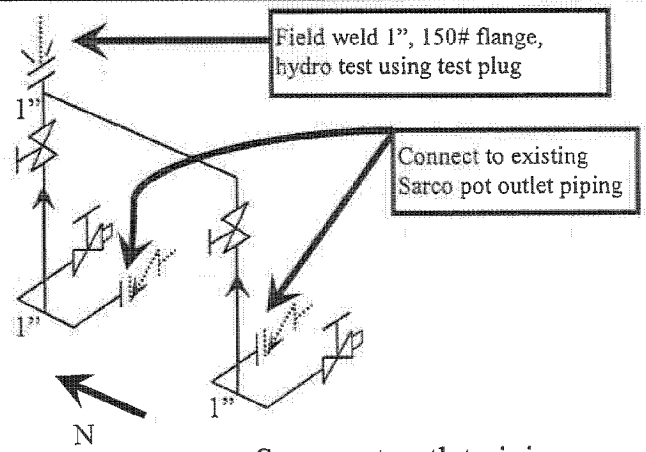

Sarco pot outlet piping

Pipe class: 1CS21

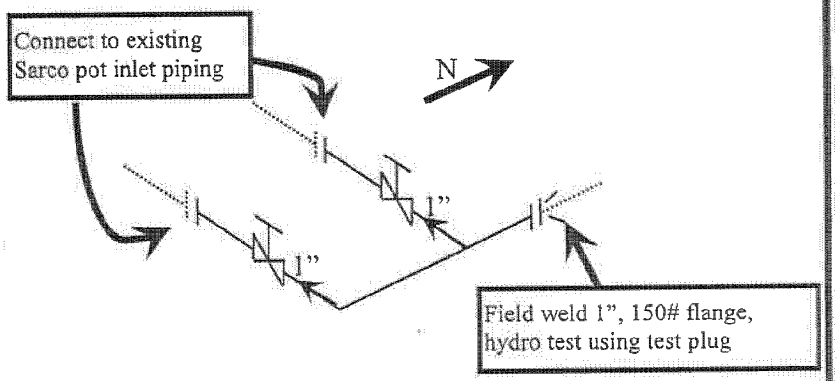

Sarco pot inlet piping

Pipe class: 1CS21

Title:	Drawing No –	Rev No –
4CU Valvelist - Sarco pot piping	SK-5315-39-02	0

CUSA-CSB-0019031
EPA

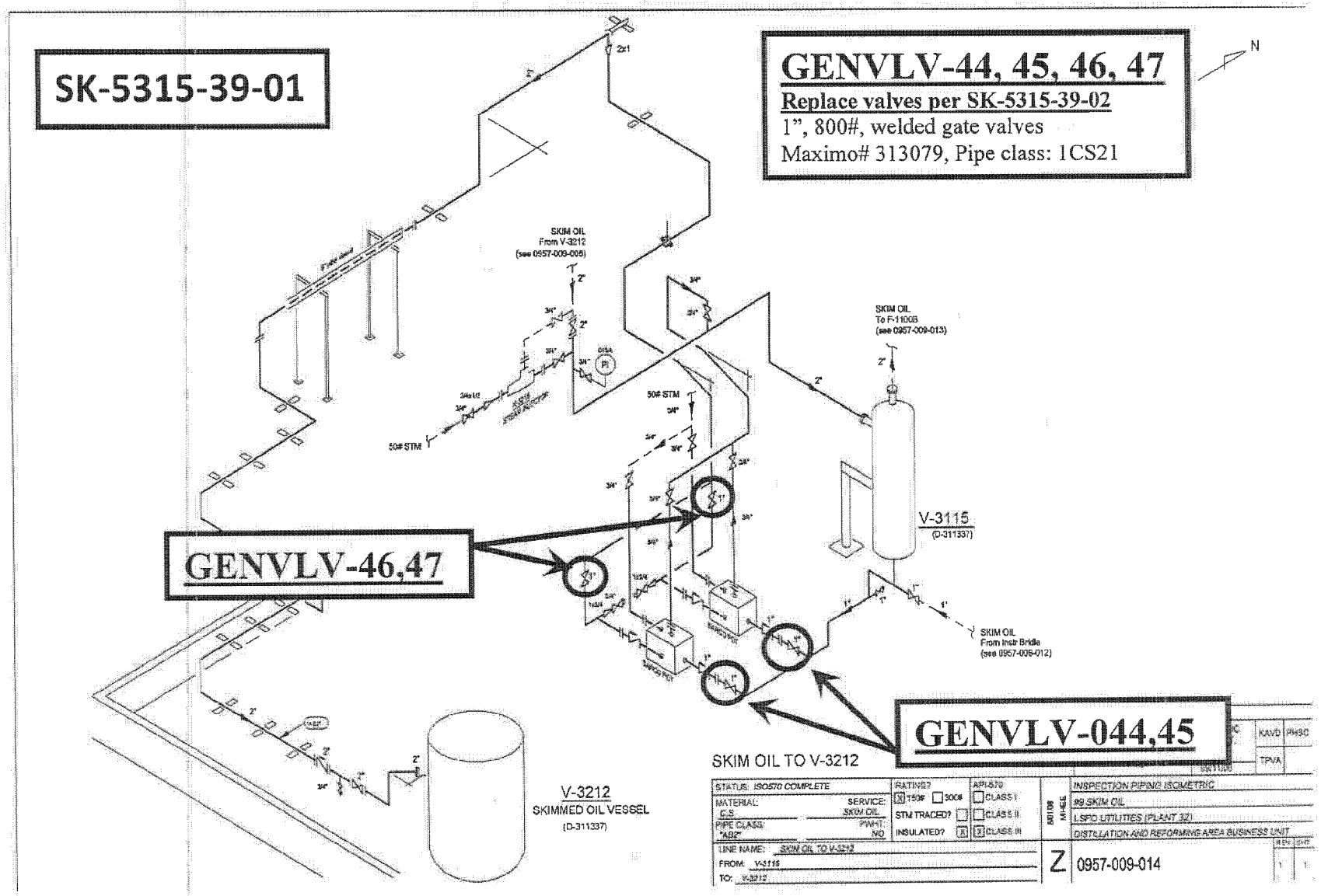
SK-5315-39-01
GENVLV-44, 45, 46, 47
Replace valves per SK-5315-39-02
1", 800#, welded gate valves
Maximo# 313079, Pipe class: 1CS21
N
SKIM OIL
From V-3212
(see 0957-009-005)
SKIM OIL
To F-1100B
(see 0957-009-013)
50# STM
V-3115
(D-311337)
GENVLV-46,47
SKIM OIL
From Incr Bridle
(see 0957-009-012)
GENVLV-044,45
V-3212
SKIMMED OIL VESSEL
(D-311337)
SKIM OIL TO V-3212
STATUS: ISO570 COMPLETE
RATING? 150# 300#
API-570 CLASS I CLASS II CLASS III
MATERIAL: C.S.
SERVICE: SKIM OIL
PIPE CLASS: "ABZ"
PWHT: NO
STM TRACED?
INSULATED?
INSPECTION PIPING ISOMETRIC
99 SKIM OIL
LSFO UTILITIES (PLANT 32)
DISTILLATION AND REFORMING AREA BUSINESS UNIT
LINE NAME: SKIM OIL TO V-3212
FROM: V-3115
TO: V-3212
Z
0957-009-014
KAVD
PHSC
TPVA

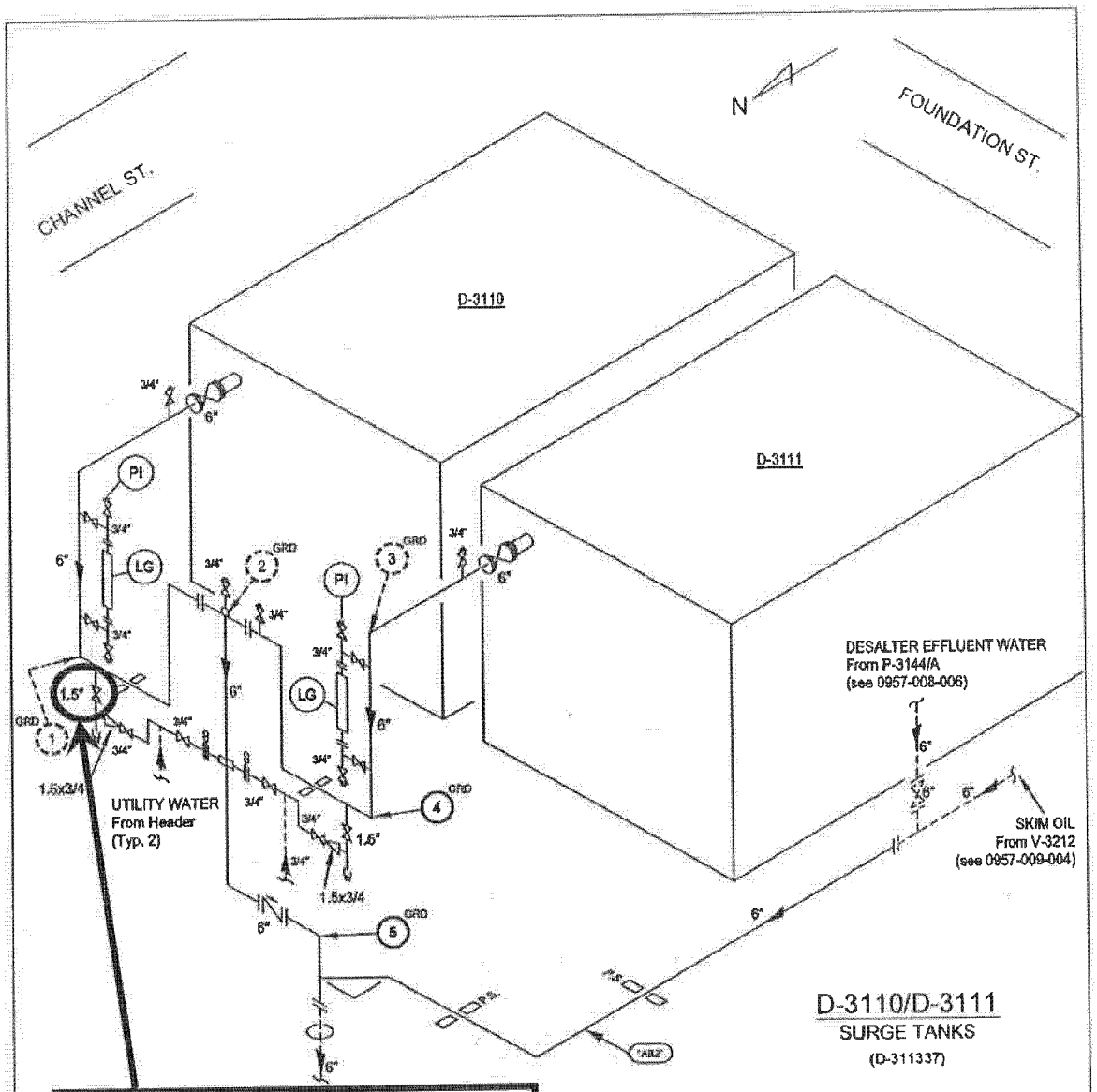

GENVLV-48

Open inspect and repair as necessary

1.5", 800#, Welded gate valve

(Valve leaks by), Pipe class: AB2

SK-5315-40

DESALTER EFFLUENT TO DRAIN

STATUS: ISO570 COMPLETE	RATING? [X] 150# [ ] 300#	API-570 [ ] CLASS I	11/14/03 JEN/sm	INSPECTION PIPING ISOMETRIC
MATERIAL: C.S. / SERVICE: DESALTING H2O	STM TRACED? [ ]	[ ] CLASS II		#8 DESALTING EFFLUENT
PIPE CLASS: "AB2" / PWHT: NO	INSULATED? [ ]	[X] CLASS III		LSFO UTILITIES (PLANT 32)
				DISTILLATION AND REFORMING AREA BUSINESS UNIT

			REV	SHT
LINE NAME: DESALTER EFFLUENT TO DRAIN	Z	0957-008-007	2	1
FROM: D-3110 & D-3111				
TO: 2A SEPARATOR				

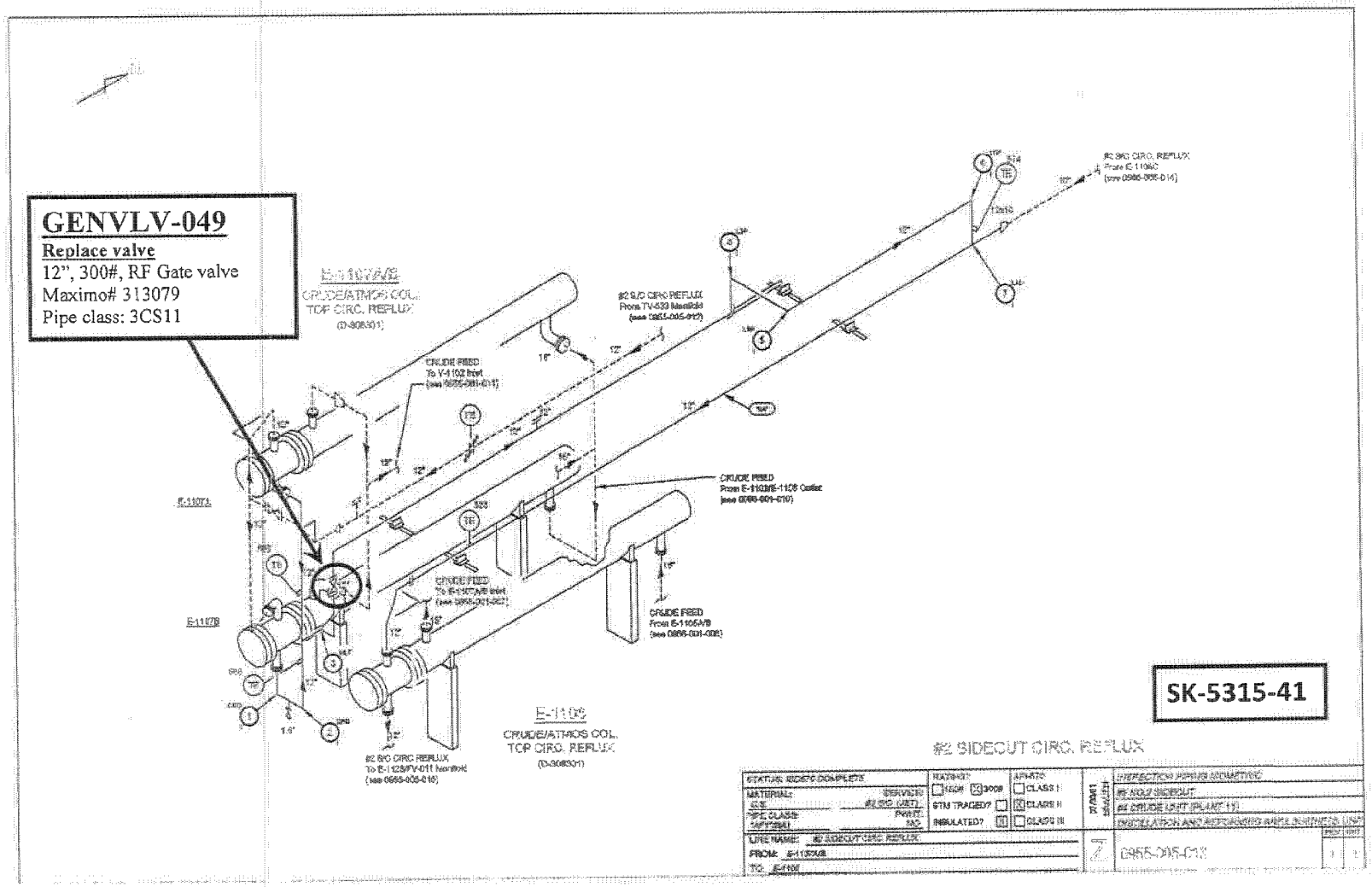
GENVLV-049
Replace valve
12", 300#, RF Gate valve
Maximo# 313079
Pipe class: 3CS11
E-1107A/B
CRUDE/ATMOS COL.
TOP CIRC. REFLUX
(D-306301)
#2 S/O CIRC REFLUX
From TV-533 Manifold
(see 0855-005-012)
CRUDE FEED
To V-1102 Inlet
(see 0855-001-011)
CRUDE FEED
From E-1103A/B-1106 Outlet
(see 0855-001-010)
CRUDE FEED
To E-1107A/B Inlet
(see 0855-001-012)
CRUDE FEED
From E-1105A/B
(see 0855-001-008)
E-1107A
E-1107B
E-1106
CRUDE/ATMOS COL.
TOP CIRC. REFLUX
(D-306301)
#2 S/O CIRC REFLUX
To E-1123/FV-011 Manifold
(see 0855-005-016)
#2 S/O CIRC. REFLUX
From E-1106C
(see 0855-005-014)
SK-5315-41
#2 SIDECUT CIRC. REFLUX
STATUS: ISSUED COMPLETE
MATERIAL:
SIZE:
PIPE CLASS:
INSULATION:
NATIONS?
150# 300#
GTM TRACED?
INSULATED?
API-570
CLASS I
CLASS II
CLASS III
INTERSECTION PIPING DIAGRAMS
#2 SIDE CUT SIDECUT
#2 CRUDE UNIT (PLANT 11)
INSULATION AND AUTOGRAPHED PIPE SUPPORTS USE
LINE NAME: #2 SIDECUT CIRC. REFLUX
FROM: E-1107A/B
TO: E-1106
0855-005-013
REV

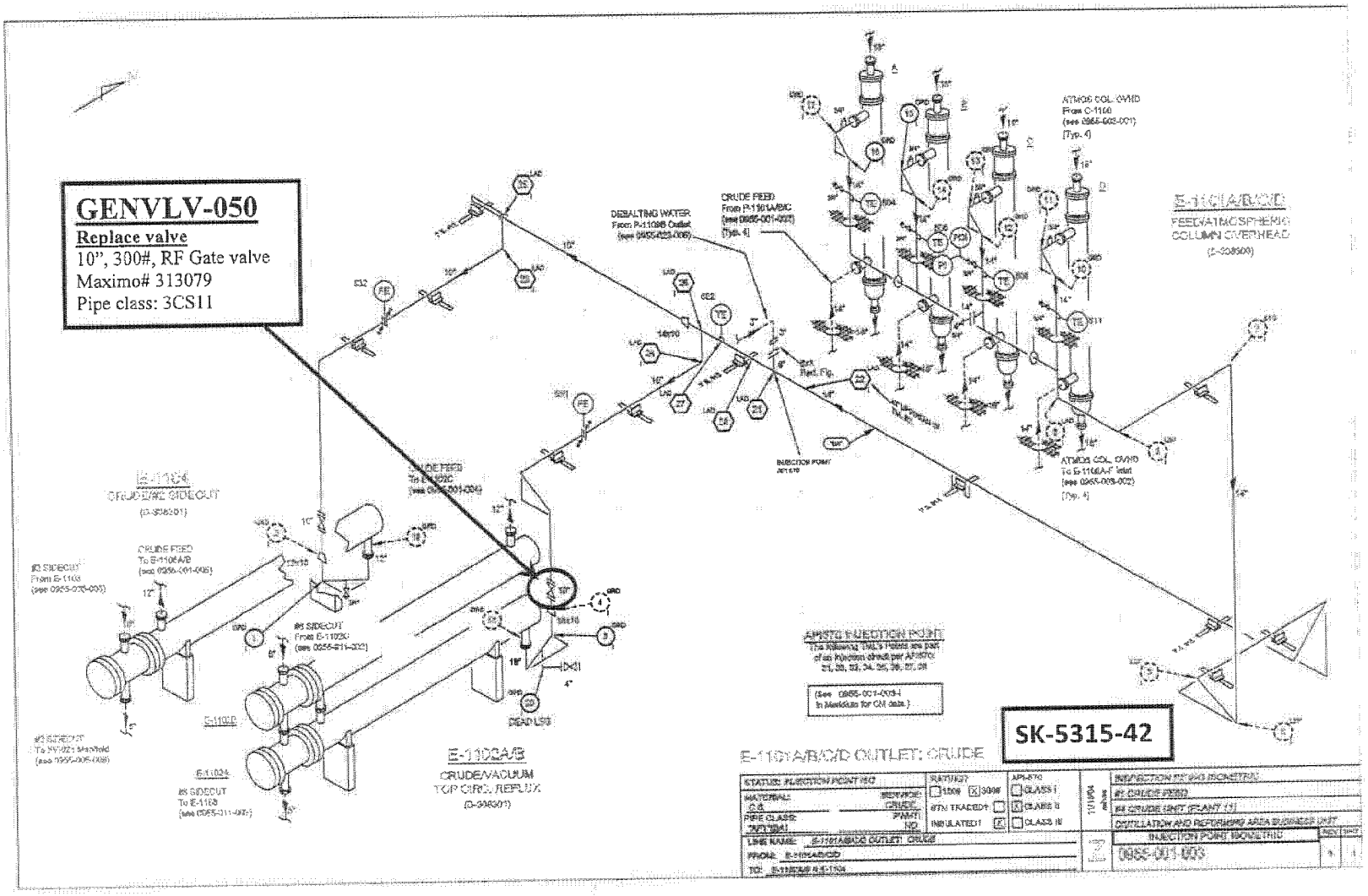
GENVLV-050
Replace valve
10", 300#, RF Gate valve
Maximo# 313079
Pipe class: 3CS11
SK-5315-42
E-1101A/B/C/D OUTLET: CRUDE
E-1102A/B
CRUDE/VACUUM
TOP CIRC. REFLUX
E-1101A/B/C/D
FEED/ATMOSPHERIC
COLUMN OVERHEAD
DESALTING WATER
CRUDE FEED
INJECTION POINT
DEAD LEG
STATUS: INJECTION POINT REQ
INJECTION POINT (IONETRIX)
#1 CRUDE FEED
#8 CRUDE UNIT (PLANT 1)
DISTILLATION AND REFORMING AREA BUSINESS UNIT
INJECTION POINT IONETRIX
0855-001-003
LINE NAME: E-1101A/B/C/D OUTLET: CRUDE
FROM: E-1101A/B/C/D
TO: E-1102A/B & E-1104

SERVICE:	Process	LIMITED BY:	Flanges
RATING CLASS:	150 RF, ASME B16.5-2009	MATERIAL:	Carbon Steel
TEMPERATURE LIMIT:	-20F to 450F	DESIGN CODE:	ASME B31.3-2008
NOMINAL CORROSION ALLOWANCE:	0.125 in. (0.092 in. MIN)	STRESS RELIEF:	NONE
VALVE TRIM:	API Trim #8 (13CR & HF)	EXAMINATION:	5% RT, PT & Visual

PRESSURE - TEMPERATURE RATINGS			NOTE: HYDROTEST @ AMBIENT = 450 psig		
TEMP F	-20 to 100	200	300	400	450
psig	285	260	230	200	185
TEMP C	-29 to 38	93	149	204	232
kPag	1965	1795	1585	1380	1275

For NPS 3/4 through NPS 24 (Full flange ratings per ASME B16.5, Tables 2-1.1.)

ITEM	NOTES	NPS	SCH/RAT	ENDS	DESCRIPTION	ITEM CODE
PIPE	01					
		3/4 – 1-1/2	160	PE	CS, SMLS, ASTM A106-B	L11LA1B
		2 – 2	XS/80	BE	CS, SMLS , ASTM A106-B	L11NA2A
		3 - 24	STD	BE	CS, SMLS , ASTM A106-B	L11MA2A
NIPPLES	03, 20					
Branch		3/4 – 1-1/2	160	PE	CS, SMLS , ASTM A106-B	L34LAEJ
		3/4 – 1-1/2	XXS	TOE-POE	CS, SMLS , ASTM A106-B	L34PAHJ
Swage (CONC)		3/4 – 1-1/2	160	BBE	CS, ASTM A234-WPB-S, MSS SP-95	L55LA1VA
Swage (CONC)		3/4 – 1-1/2	XXS	BLE-TSE	CS, ASTM A234-WPB-S, MSS SP-95	L35PBMQ
FITTINGS	02					
Sockolet		3/4 – 1-1/2	Class 6000	SW	CS, ASTM A105, MSS SP-97	L36VBDT
Thredolet	03	3/4 – 1-1/2	Class 6000	THRD	CS, ASTM A105, MSS SP-97	L36VBAT
SW Elbolet		3/4 – 1-1/2	Class 6000	SW	CS, ASTM A105	L36VBDU
Latrolet	92	3/4 – 1-1/2	160	Weld	CS, ASTM A105	L56LA1K
Weldolet	05	3/4 – 1-1/2	160	Weld	CS, ASTM A105, MSS SP-97	L56LA1H
90 ELL		3/4 – 1-1/2	Class 6000	SW	CS, ASTM A105, ASME B16.11	L30VBDB
45 ELL		3/4 – 1-1/2	Class 6000	SW	CS, ASTM A105, ASME B16.11	L30VBDA
Tee	03	3/4 – 1-1/2	Class 6000	THRD	CS, ASTM A105, ASME B16.11	L31VBA
Tee		3/4 – 1-1/2	Class 6000	SW	CS, ASTM A105, ASME B16.11	L31VBD
Tee (RED)		3/4 – 1-1/2	Class 6000	SW	CS, ASTM A105, ASME B16.11	L31VBDD
Plug	03	3/4 – 1-1/2		THRD	CS, ASTM A105, round head, ASME B16.11	L370ABW
Plug		3/4 – 1-1/2		PE	CS, ASTM A105, round head, ASME B16.11	L370AEW
Coupling		3/4 – 1-1/2	Class 6000	SW	CS, ASTM A105, ASME B16.11	L34VBDH
Cap		3/4 – 1-1/2	Class 6000	SW	CS, ASTM A105, ASME B16.11	L37VBDX
Reducer (CONC)		2 – 2	XS/80	Weld	CS, ASTM A234-WPB-S, ASME B16.9	L55NA1DA
Reducer (ECC)		2 – 2	XS/80	Weld	CS, ASTM A234-WPB-S, ASME B16.9	L55NA1DB
Weldolet	05	2 – 2	XS/80	Weld	CS, ASTM A105, MSS SP-97	L56NA1H
90 LR ELL		2 – 2	XS/80	Weld	CS, ASTM A234-WPB-S, ASME B16.9	L50NA1BC
45 LR ELL		2 – 2	XS/80	Weld	CS, ASTM A234-WPB-S, ASME B16.9	L50NA1AC
Tee		2 – 2	XS/80	Weld	CS, ASTM A234-WPB-S, ASME B16.9	L51NA1
Tee (RED)	99	2 – 2	XS/80	Weld	CS, ASTM A234-WPB-S, ASME B16.9	L51NA1D
Cap		2 – 2	XS/80	Weld	CS, ASTM A234-WPB-S, ASME B16.9	L57NA1R
Reducer (CONC)		3 – 24	STD	Weld	CS, ASTM A234-WPB-S, ASME B16.9	L55MA1DA
Reducer (ECC)		3 – 24	STD	Weld	CS, ASTM A234-WPB-S, ASME B16.9	L55MA1DB
Weldolet	05	3 – 8	STD	Weld	CS, ASTM A105, MSS SP-97	L56MA1H
90 LR ELL		3 – 24	STD	Weld	CS, ASTM A234-WPB-S, ASME B16.9	L50MA1BC
45 LR ELL		3 – 24	STD	Weld	CS, ASTM A234-WPB-S, ASME B16.9	L50MA1AC
Tee		3 – 24	STD	Weld	CS, ASTM A234-WPB-S, ASME B16.9	L51MA1
Tee (RED)	99	3 – 24	STD	Weld	CS, ASTM A234-WPB-S, ASME B16.9	L51MA1D
Cap		3 – 24	STD	Weld	CS, ASTM A234-WPB-S, ASME B16.9	L57MA1R
VALVES						
Gate	15	3/4 – 1-1/2	Class 150	RF	CS body, API #8 trim, RP, BB	L20BA3HD
Gate		1/2 – 1/2	Class 800	MSW/FSW	CS body, API #8 trim, RP, BB, EXTD BDY	L20KAXHDM
Gate	02	3/4 – 1-1/2	Class 800	MSW/FNPT	CS body, API #8 trim, RP, BB, EXTD BDY	L20KAYHDM
Gate		3/4 – 1-1/2	Class 800	SW	CS body, API #8 trim, RP, BB	L20KA1HD
Gate	325	3/4 – 1-1/2	Class 800	SW	CS body, API #8 trim, FP, BB	L20KA1DD

ITEM	NOTES	NPS	SCH/RAT	ENDS	DESCRIPTION	ITEM CODE
VALVES						
Gate	06	3/4 – 1-1/2	Class 800	T/SW	CS body, API #8 trim, BB	L20KA7HD
Gate	309	3/4 – 1-1/2	Class 800	T/SW	CS body, API #8 trim, RP, BELLOW SEAL, WB	L20KA7MDL
Gate	309	3/4 – 1-1/2	Class 800	SW	CS body, API #8 trim, RP, BELLOW SEAL, WB	L20KA1MDL
Gate		2 - 8	Class 150	RF	CS body, API #8 trim, FP, BB	L20BA3DD
Gate		10 – 24	Class 150	RF	CS body, API #8 trim, FP, BB, GO	L20BA3DDF
Globe	307	3/4 – 1-1/2	Class 800	SW	CS body, API #8 trim, BB	L21KA1DE
Globe	309, 307	3/4 – 1-1/2	Class 800	THRD	CS body, API #8 trim, BELLOW SEAL, WB	L21KA0JEL
Globe	309, 307	3/4 – 1-1/2	Class 800	SW	CS body, API #8 trim, BELLOW SEAL, WB	L21KA1JEL
Globe	307	2 - 3	Class 150	RF	CS body, API #8 trim, BB	L21BA3DE
Globe	307	4 - 8	Class 150	RF	CS body, API #8 trim, BB, GO	L21BA3DEB
Check	61,328	3/4 – 1-1/2	Class 800	SW	CS body, API #8 trim, Piston, BC, HORIZ.	L22KA1TEF
Check	62,328	2 – 24	Class 150	RF	CS body, API #8 trim, BC, Swing	L22BA3PE
Check	62,328	6 – 24	Class 150	RF	CS body, API #8 trim, Dual Plate	L22BA3LEH
Ball	26, 101	2 – 12	Class 150	RF	CS, (A216-WCB) T3 MOD, RP, ORBIT	L25BB3FB
Ball	101, 327	2 – 6	Class 150	RF	CS body, 316 SS trim, RP, TFE seat, FS	L25BA3CE
Ball	101, 327	2– 24	Class 150	RF	CS body, 316 SS trim, RP, TFE seat, FS, GO	L25BA3CEM
Butterfly	101	2 – 24	Class 150	RF	CS body, 316 SS trim, Flg, Triple Offset GO	L26BA3TJM
FLANGES	02, 104					
Socket Weld		3/4 – 1-1/2	Class 150	SW	CS, ASTM A105, ASME B16.5, 160 Bore	L40BA3BL
Blind		3/4 – 24	Class 150	RF	CS, ASTM A105, ASME B16.5	L43BA3
Blind Spectacle		3/4 – 18	Class 150	RF	CS, ASTM A516-70, ASME B16.48	L45BA3E
Spacer Ring		20 – 24	Class 150	RF	CS, ASTM A516-70, ASME B16.48	L45BA3F
Blind Plate		20 – 24	Class 150	RF	CS, ASTM A516-70, ASME B16.48	L45BA3G
Weld Neck		2 – 2	Class 150	RF	CS, ASTM A105, ASME B16.5, XS/80 Bore	L40BA3DN
Weld Neck	12	2 – 2	Class 300	RF	CS, ASTM A105, ASME B16.5, XS/80 Bore	L40FA3DN
Weld Neck		3 – 24	Class 150	RF	CS, ASTM A105, ASME B16.5, STD Bore	L40BA3DM
Weld Neck	12	3 – 24	Class 300	RF	CS, ASTM A105, ASME B16.5, STD Bore	L40FA3DM
Pair WN Orifice		2 – 2	Class 300	RF	CS, ASTM A105, ASME B16.36, NPS ½ SW taps, XS/80 Bore	L42FA3DNL
Pair WN Orifice	17	3 – 18	Class 300	RF	CS, ASTM A105, ASME B16.36, NPS ½ SW taps, STD Bore	L42FA3DML
GASKETS						
		3/4 – 24	Class 150		Spiral wound type 316L SS w/ flexible Inhibited Graphite filler, ASME B16.20, w/inner ring.	L61BF1CAC
	301	3/4 – 24	Class 150		KAM style, 316LSS w/APX-2 Graphite, EXH-SU-5151	L61BF1ZA
	12	3/4 – 24	Class 300		Spiral wound type 316L SS w/ flexible Inhibited Graphite filler, ASME B16.20, w/inner ring.	L61FF1CAC
	12, 301	3/4 – 24	Class 300		KAM style, 316LSS w/APX-2 Graphite, EXH-SU-5151	L61FF1ZA
BOLTING						
Stud Bolts		3/4 – 24			ASTM A193, Gr B7 stud w/ 2 heavy hex nuts ASTM A194, Gr 2H	L620BM

90° BRANCH CONNECTION, Legend and Chart

BRANCH	HEADER SIZE 24	20	18	16	14	12	10	8	6	4	3	2	1-1/2	1	3/4	1/2
24	T															
20	E	T														
18	E	E	T													
16	E	E	E	T												
14	E	E	E	E	T											
12	E	E	E	E	E	T										
10	E	E	E	E	E	E	T									
8	W	E	E	E	E	E	E	T								
6	W	W	W	E	E	E	E	E	T							
4	W	W	W	W	W	W	E	E	E	T						
3	W	W	W	W	W	W	W	E	E	E	T					
2	W	W	W	W	W	W	W	W	W	E	E	T				
1-1/2	S	S	S	S	S	S	S	S	S	S	S	S	T			
1	S	S	S	S	S	S	S	S	S	S	S	S	E	T		
3/4	S	S	S	S	S	S	S	S	S	S	S	S	E	E	T	
1/2	S	S	S	S	S	S	S	S	S	S	S	S	E	E	E	T

E Reducing Tee
P Branch Weld w/ Reinforcing Pad (Pad thickness equals run pipe thickness. Pad width equals 1/2 branch OD.)
T Equal Tee
S Sockolet
W Weldolet (Note 05)

NOTES:

01 WHERE PIPE SCHEDULE IS SHOWN UNDER "SCH/RAT," IT IS ADEQUATE FOR THE FULL FLANGE RATING. WHERE "CALC" IS SHOWN, THE PRESSURE LIMIT MAY BE LOWER THAN FLANGE RATING.
02 ALL BUTT-WELDED COMPONENT THICKNESSES SHALL MATCH PIPE THICKNESS.
03 THREADED JOINTS ARE PERMITTED ONLY AT OUTLET OF VENT AND DRAIN VALVES, AT HYDROSTATIC CONNECTIONS, AT OUTLET OF INSTRUMENT TAKE-OFF VALVES, AND TO MATCH EQUIPMENT.
05 INTEGRALLY REINFORCED BRANCH CONNECTIONS ARE PERMITTED OUTSIDE THE SIZES SHOWN IN THE BRANCH CONNECTION TABLE. DESIGNER SHALL CHECK WELD THICKNESS OF INTEGRALLY REINFORCED BRANCH CONNECTIONS TO DETERMINE IF PWHT IS REQUIRED.
06 THESE VALVES SHALL BE USED ONLY FOR VENT, DRAIN, AND INSTRUMENT CONNECTIONS.
12 TO BE USED ONLY TO MATCH CLASS 300 RATED FLANGE CONNECTIONS AT CONTROL VALVES AND SPECIAL EQUIPMENT.
15 TO BE USED WHEN MATING TO FLANGED NOZZLES.
26 TO BE USED ONLY WHEN INDICATED ON P&ID.
61 INSTALL IN HORIZONTAL POSITION WITH COVER UP.
62 INSTALL IN HORIZONTAL POSITION WITH COVER UP OR IN VERTICAL POSITION WITH UPWARD FLOW.
301 FOR USE IN VOC REGULATED SERVICES; IN FLANGES WITH SLIGHTLY DAMAGED GASKET SEATING FACES; OR IN FLANGES WITH A HISTORY OF LEAKING.
307 LIMITED TO THROTTLING SERVICES UP TO 150 PSI DIFFERENTIAL PRESSURE. FOR SERVICE APPLICATIONS WITH DIFFERENTIAL PRESSURES GREATER THAN 150 PSI, CONSULT WITH THE VALVE MANUFACTURER AND CHEVRON PIPING & VALVE SME FOR SUITABILITY.
325 USE FULL PORT VALVES IN LOCATIONS REQUIRING FULL OPENINGS SUCH AS UPSTREAM AND DOWNSTREAM OF RELIEF VALVES OR IN HORIZONTAL LINES CONTAINING HAZARDOUS LIQUIDS.
327 LIMITED TO PROCESS TEMPERATURES UP TO 250°F (121°C)
328 SIZING AND LOCATION OF CHECK VALVES IS CRITICAL FOR RELIABLE OPERATION. SEE SECTION 6.0 (25) IN THE GENERAL SPECIFICATION FOR MORE INFORMATION.
17 USE WELD NECK FLANGES AND THROAT TAPS NPS 20" AND LARGER
67 USE RESTRICTED TO ORIFICE FLANGE TAP CONNECTIONS. THREADED NIPPLES TO BE SEAL WELDED. NIPPLE LENGTHS SHALL BE IN ACCORDANCE WITH STANDARD DRAWING D-601407.
92 USE RESTRICTED TO THERMOWELL ASSEMBLY ONLY
94 USE RESTRICTED TO DRAINS, OPERATIONAL VENTS, AND INSTRUMENT CONNECTIONS.
101 TO BE USED WHERE TIGHT SHUT-OFF IS REQUIRED.
104 USE CLASS 300 FLANGES WHEN MATING TO CONTROL VALVES AND EQUIPMENTS
309 USE BELLOW SEAL GATE VALVES FOR ALL IN-KIND PEPLACEMENT ONLY. INSTALL NEW BELLOW SEALVALVES WHEN REQUIRED BY PROJECT FOR PERMIT PURPOSES.

SERVICE:

- General Services (Corrosive)
- Hydrocarbon Gas, Vapor & Liquid
- Hydrocarbons Gas, Vapor & Liquid with Trace H2S
- LPG and LPG with Trace H2S (USE TO MATCH TO EXISTING PIPING; CLASS 300 RECOMMENDED FOR NEW SYSTEMS)
- LPG/HC Mixture with Trace H2S (USE TO MATCH TO EXISTING PIPING; CLASS 300 RECOMMENDED FOR NEW SYSTEMS)

		LIMITED BY:	Category D Service
SERVICE:	Utility Services	MATERIAL:	Carbon Steel
RATING CLASS:	150# RF, ASME B16.5-2009	DESIGN CODE:	ASME B31.3-2008
TEMPERATURE LIMIT:	366°F (see exception noted below)	STRESS RELIEF:	NONE
NOMINAL CORROSION ALLOWANCE:	.0623 in. (0.05 in. MIN for ¼")	EXAMINATION:	5% VISUAL ONLY
VALVE TRIM:	BRZ / TFE / API Trim #8		

PRESSURE - TEMPERATURE RATINGS		HYDROTEST @ AMBIENT = Service						
TEMP F	-20 to 366							
TEMP C	-29 to 185							

For NPS 3/4 through 24 (Ratings per ASME B31.3 Cat. D Service, exception; ball valves limited to 100psig @ 200°F)

psig	150							
kPag	1035							

ITEM	NOTES	NPS	SCH/RAT	ENDS	DESCRIPTION	ITEM CODE
PIPE						
		3/4 – 1-1/2	XS		CS, SMLS, ASTM A106-B, T & C	L11NA4A
	326	2 - 2	XS		CS, SMLS, ASTM A106-B, BFW	L11NA2A
		3 - 24	STD		CS, SMLS, ASTM A106-B, BFW	L11MA2A
NIPPLES						
	67	1/2 - 1/2	160	TOE-POE	CS, SMLS, ASTM A106-B	L34LAHJ
		¾ - 1-1/2	XS	TBE	CS, SMLS, ASTM A106-B	L34NABJ
Swage (CONC)		¾ - 1-1/2	XS	TBE	CS, SMLS, ASTM A234-WPB	L35NBBQ
Swage (CONC)		¾ - 1-1/2	XS	BLE-TSE	CS, SMLS, ASTM A234-WPB	L35NBMQ
FITTINGS	02, 326					
Thredolet		¾ - 1-1/2	Class 3000	THRD	CS, ASTM A105, MSS-SP-97	L36SBAT
Elbolet	92	¾ - 1-1/2	Class 3000	THRD	CS, ASTM A105	L36SBAU
Latrolet	92	¾ - ¾	Class 3000	THRD	CS, ASTM A105	L36SBAV
90 ELL		¾ - 1-1/2	Class 3000	THRD	CS, ASTM A105, ASME B16.11	L30SBAB
45 ELL		¾ - 1-1/2	Class 3000	THRD	CS, ASTM A105, ASME B16.11	L30SBAA
Tee	67	1/2 - 1/2	Class 3000	THRD	CS, ASTM A105, ASME B16.11	L31SBA
Tee		¾ - 1-1/2	Class 3000	THRD	CS, ASTM A105, ASME B16.11	L31SBA
Tee (RED)		¾ - 1-1/2	Class 3000	THRD	CS, ASTM A105, ASME B16.11	L31SBAD
Plug	67	1/2 - 1/2	Solid	THRD	CS, ASTM A105, round head, ASME B16.11	L370ABW
Plug		¾ - 1-1/2	Solid	THRD	CS, ASTM A105, round head, ASME B16.11	L370ABW
Coupling		¾ - 1-1/2	Class 3000	THRD	CS, ASTM A105, ASME B16.11	L34SBAH
Cap		¾ - 1-1/2	Class 3000	THRD	CS, ASTM A105, ASME B16.11	L37SBAX
Reducer (CONC)		2 - 2	XS	Weld	CS, ASTM A234-WPB-W, ASME B16.9	L55NA1DA
Reducer (ECC)		2 - 2	XS	Weld	CS, ASTM A234-WPB-W, ASME B16.9	L55NA1DB
Weldolet	05	2 - 2	XS	Weld	CS, ASTM A105, MSS-SP-97	L56NA1H
90 LR ELL		2 - 2	XS	Weld	CS, ASTM A234-WPB-W, ASME B16.9	L50NA1BC
45 LR ELL		2 - 2	XS	Weld	CS, ASTM A234-WPB-W, ASME B16.9	L50NA1AC
Tee		2 - 2	XS	Weld	CS, ASTM A234-WPB-W, ASME B16.9	L51NA1
Tee (RED)	99	2 - 2	XS	Weld	CS, ASTM A234-WPB-W, ASME B16.9	L51NA1D
Cap		2 - 2	XS	Weld	CS, ASTM A234-WPB-S, ASME B16.9	L57NA1R
Reducer (CONC)		3 - 24	STD	Weld	CS, ASTM A234-WPB-W, ASME B16.9	L55MA1DA
Reducer (ECC)		3 - 24	STD	Weld	CS, ASTM A234-WPB-W, ASME B16.9	L55MA1DB
Weldolet	05	3 - 6	STD	Weld	CS, ASTM A105, MSS-SP-97	L56MA1H
90 LR ELL		3 - 24	STD	Weld	CS, ASTM A234-WPB-W, ASME B16.9	L50MA1BC
45 LR ELL		3 - 24	STD	Weld	CS, ASTM A234-WPB-W, ASME B16.9	L50MA1AC
Tee		3 - 24	STD	Weld	CS, ASTM A234-WPB-W, ASME B16.9	L51MA1
Tee (RED)	99	3 - 24	STD	Weld	CS, ASTM A234-WPB-W, ASME B16.9	L51MA1D
Cap		3 - 24	STD	Weld	CS, ASTM A234-WPB-S, ASME B16.9	L57MA1R

CUSA-CSB-0019039
EPA

ITEM	NOTES	NPS	SCH/RAT	ENDS	DESCRIPTION	ITEM CODE
VALVES						
Gate	67	½ - ½	Class 800	THD	CS body (A105), API #8 trim, BB, RP	L20KA0HD
Gate	10, 123	¾ - 1-1/2	Class 800	THD	CS body (A105), API #8 trim, BB, RP	L20KA0HD
Gate	123	2 - 10	Class 150	RF	CS body (A216-WCB), API #8 trim, BB	L20BA3CD
Gate	123	12 - 24	Class 150	RF	CS body (A216-WCB), API #8 trim, BB, GO	L20BA3CDF
Globe	307	¾ - 1-1/2	Class 800	THD	CS body (A105), API #8 trim, BB	L21KA0DE
Globe	307	2 - 3	Class 150	RF	CS body (A216-WCB), API #8 trim, BB	L21BA3DE
Globe	307	4 - 8	Class 150	RF	CS body (A216-WCB), API #8 trim, BB, GO	L21BA3DEB
Check	61	¾ - 1-1/2	Class 800	THD	CS body (A105), API #8 trim, Piston, BC, Horiz	L22KA0TEF
Check	62	2 - 24	Class 150	RF	CS body (A216-WCB), API #8 trim, BC, Swing	L22BA3PE
Butterfly	127	4 - 4	Class 150	RF	CS body (A216-WCB), Wafer/Lug, 17-4/CS TR, TFE Seat, LWO	L26BA7WBX
Butterfly	127	6 - 24	Class 150	RF	CS body (A216-WCB), Wafer/Lug, 17-4/CS TR, TFE Seat, GO	L26BA7WBM
Ball	10	¾ - 1-1/2	400 LB	THD	Bronze body (B62), Brz / Buna-N Trim, RP, WO	L25G50CV
Ball		2 - 3	Class 150	RF	CS body (A216-WCB), TFE Trim, FP, FS, WO	L25BA3AB
FLANGES	326					
(THD) Threaded	11	¾ - 1-1/2	Class 150	FF	CS, ASTM A105, ASME B16.5	L40BA2A
(THD) Threaded		¾ - 1-1/2	Class 150	RF	CS, ASTM A105, ASME B16.5	L40BA3A
Blind		¾ - 24	Class 150	RF	CS, ASTM A105, ASME B16.5	L43BA3
Blind Spectacle		¾ - 12	Class 150	RF	CS, ASTM A516 Gr 70, ASME B16.48	L45BA3B
Spacer Ring		14 - 24	Class 150	RF	CS, ASTM A516 Gr 70, ASME B16.48	L45BA3F
Blind Plate		14 - 24	Class 150	RF	CS, ASTM A516 Gr 70, ASME B16.48	L45BA3G
Slip-On	11	2 - 24	Class 150	FF	CS, ASTM A105, ASME B16.5	L40BA2C
Slip-On		2 - 24	Class 150	RF	CS, ASTM A105, ASME B16.5	L40BA3C
Slip-On	104	2 - 24	Class 300	RF	CS, ASTM A105, ASME B16.5	L40FA3C
Weld Neck	5, 93	2 - 2	Class 150	RF	CS, ASTM A105, ASME B16.5, XS Bore	L40BA3DN
Weld Neck	5, 93	3 - 24	Class 150	RF	CS, ASTM A105, ASME B16.5, STD Bore	L40BA3DM
Pair WN Orifice		1 - 2	Class 300	RF	CS, ASTM A105, ASME B16.36, XS Bore, ½" SW taps	L42FA3DNL
Pair WN Orifice	17	3 - 18	Class 300	RF	CS, ASTM A105, ASME B16.36, STD Bore, ½" SW taps	L42FA3DML
GASKETS						
	11	¾ - 24	Class 150	FF	ARAMID w/ Nitrile binder, full face, 1/16" thk	L61BQ0B
		3/4 – 24	Class 150	RF	Spiral wound type 304L SS w/ flexible Inhibited Graphite filler, ASME B16.20, w/inner ring	L61BF1CAC
	301	3/4 – 24	Class 150	RF	KAM style, 304LSS w/APX-2 Graphite, EXH-SU-5151	L61BF1ZA
	12	3/4 – 24	Class 300	RF	Spiral wound type 304L SS w/ flexible Inhibited Graphite filler, ASME B16.20, w/inner ring	L61FF1CAC
	12, 301	3/4 – 24	Class 300	RF	KAM style, 304LSS w/APX-2 Graphite, EXH-SU-5151	L61FF1ZA
BOLTING						
Stud Bolts		¾ - 24			ASTM A193 Gr B7 Stud w/ 2 Hvy Hex Nuts A194 Gr 2H	L620BM
Cap Screw	127	¾ - 24			ASTM A193 Gr B7	L620BQ

CUSA-CSB-0019040
EPA

90° BRANCH CONNECTION, Legend and Chart

BRANCH	HEADER SIZE														
24	T														
20	E	T													
18	U	E	T												
16	U	U	E	T											
14	U	U	U	E	T										
12	U	U	U	U	E	T									
10	U	U	U	U	U	E	T								
8	U	U	U	U	U	U	E	T							
6	U	U	U	U	U	U	U	E	T						
4	U	U	U	U	U	U	U	U	E	T					
3	U	U	U	U	U	U	U	U	U	E	T				
2	U	U	U	U	U	U	U	U	U	U	E	T			
1-1/2	Th	Th	Th	Th	Th	Th	Th	Th	Th	Th	Th	E	T		
1	Th	Th	Th	Th	Th	Th	Th	Th	Th	Th	Th	Th	E	T	
3/4	Th	Th	Th	Th	Th	Th	Th	Th	Th	Th	Th	Th	E	E	T
	24	20	18	16	14	12	10	8	6	4	3	2	1-1/2	1	3/4

E Reducing Tee (Note 99)
U Unreinforced Branch Weld
T Equal Tee
Th Thredolet
W Weldolet (Note 05)

NOTES:

01 WHERE PIPE SCHEDULE IS SHOWN UNDER "SCH/RAT", IT IS ADEQUATE FOR FULL FLANGE RATING. WHERE "CALC." IS SHOWN, THE PRESSURE LIMIT MAY BE LOWER THAN FLANGE RATING.
02 ALL BUTTWELD COMPONENT THICKNESSES SHALL MATCH PIPE THICKNESSES.
05 INTEGRALLY REINFORCED BRANCH CONNECTIONS ARE PERMITTED OUTSIDE THE SIZES SHOWN IN THE BRANCH CONNECTION TABLES. DESIGNER SHALL CHECK WELD THICKNESS OF INTEGRALLY REINFORCED BRANCH CONNECTIONS TO DETERMINE IF PWHT IS REQUIRED.
06 THESE VALVES SHALL BE USED ONLY FOR VENT, DRAIN AND INSTRUMENT CONNECTIONS.
15 TO BE USED WHEN MATING TO FLANGED NOZZLES.
26 TO BE USED ONLY WHEN INDICATED ON THE P&ID.
61 INSTALL IN HORIZONTAL POSITION WITH COVER UP.
62 INSTALL IN HORIZONTAL POSITION WITH COVER UP OR IN VERTICAL POSITION WITH UPWARD FLOW.
301 FOR USE IN VOC REGULATED SERVICES; IN FLANGES WITH SLIGHTLY DAMAGED GASKET SEATING FACES; OR IN FLANGES WITH A HISTORY OF LEAKING.
307 LIMITED TO THROTTLING SERVICES UP TO 150 PSI DIFFERENTIAL PRESSURE. FOR SERVICE APPLICATIONS WITH DIFFERENTIAL PRESSURES GREATER THAN 150 PSI, CONSULT WITH THE VALVE MANUFACTURER AND CHEVRON PIPING & VALVE SME FOR SUITABILITY.
326 USE OF MECHANICAL COMPRESSION (LOKRING) FITTINGS, UP TO 3" DIAMETER, IS ACCEPTABLE FOR ALL SERVICES IN THIS PIPE CLASS. SEE SECTION 6.0 (18) IN THE GENERAL SPECIFICATION FOR TEMPERATURE AND PRESSURE LIMITS.

5 SLIP ON FLANGES ARE PREFERRED
10 USE STEEL VALVES WHERE EXPOSED TO NH3 OR H2S ENVIRONMENTS OR TO MECHANICAL HAZARD SUCH AS ROADS ETC, WHERE DIFFERENTIAL SETTLEMENT OR STOCK FREEZING IS ANTICIPATED.
11 USE FLAT FACE FLANGES AND FULL FACE GASKETS WHEN MATING TO CAST IRON FLANGES. B7 STUDS ARE ACCEPTABLE.
17 USE WELD NECK FLANGES AND THROAT TAPS NPS 20" AND LARGER.
67 USE RESTRICTED TO ORIFICE FLANGE TAP CONNECTIONS.
92 USE RESTRICTED TO THERMOWELL ASSEMBLIES ONLY.
93 USE WELDNECK FLANGES ADJACENT TO BUTTWELD FITTINGS
99 REDUCING TEES MAY BE SUBSTITUTED FOR ANY TYPE OF BRANCH CONNECTIONS.
104 USE CLASS 300 FLANGES WHEN MATING TO CONTROL VALVES AND EQUIPMENT.
123 USE AS PLOT LIMIT BLOCK VALVE.
127 CAP SCREWS MAY BE REQUIRED IN CERTAIN VALVE DESIGNS AND SIZES.

SERVICE:

- Cooling Water
- Fresh Water
- Plant Water
- Treated Water
- Utility Air

CUSA-CSB-0019041
EPA

		LIMITED BY:	Flanges
SERVICE:	Process	MATERIAL:	Carbon Steel
RATING CLASS:	150 RF, ASME B16.5-2009	DESIGN CODE:	ASME B31.3-2008
TEMPERATURE LIMIT:	-20F to 450F	STRESS RELIEF:	NONE
NOMINAL CORROSION ALLOWANCE:	0.063 in. (0.050 in. MIN for ¾")	EXAMINATION:	5% RT, PT & Visual
VALVE TRIM:	API Trim #8 (13CR & HF)		

PRESSURE - TEMPERATURE RATINGS			NOTE: HYDROTEST @ AMBIENT = 450 psig		
TEMP F	-20 to 100	200	300	400	450
psig	285	260	230	200	185
TEMP C	-29 to 38	93	149	204	232
kPag	1965	1795	1585	1380	1275

For NPS 3/4 through NPS 30 (Full flange ratings per ASME B16.5 and ASME B16.47, Tables 2-1.1.)

ITEM	NOTES	NPS	SCH/RAT	ENDS	DESCRIPTION	ITEM CODE
PIPE						
		3/4 – 1-1/2	XS/80	PE	CS, SMLS, ASTM A106-B	L11NA1B
		2 – 2	XS/80	BE	CS, SMLS , ASTM A106-B	L11NA2A
		3 – 24	STD	BE	CS, SMLS , ASTM A106-B	L11MA2A
		28 – 42	STD	BE	CS, SMLS/DSAW, API-5L PSL2 (Ej=.95)	L14MA2A
NIPPLES						
Branch		3/4 – 1-1/2	160	PE	CS, SMLS , ASTM A106-B	L34LAEJ
Branch		3/4 – 1-1/2	160	TOE-POE	CS, SMLS , ASTM A106-B	L34LAHJ
Swage (CONC)		3/4 – 1-1/2	160	BBE	CS, ASTM A234-WPB-S, MSS SP-95	L55NA1VA
Swage (CONC)		3/4 – 1-1/2	160	BLE-TSE	CS, ASTM A234-WPB-S, MSS SP-95	L35LBMQ
FITTINGS						
Sockolet		3/4 – 1-1/2	Class 3000	SW	CS, ASTM A105, MSS SP-97	L36SBDT
Thredolet	03	3/4 – 1-1/2	Class 3000	THRD	CS, ASTM A105, MSS SP-97	L36SBAT
SW Elbolet		1 – 1-1/2	Class 3000	SW	CS, ASTM A105	L36SBDU
Latrolet	92	1 – 1-1/2	XS/80	Weld	CS, ASTM A105	L56NA1K
Weldolet	05	1 – 1-1/2	XS/80	Weld	CS, ASTM A105, MSS SP-97	L56NA1H
90 ELL		3/4 – 1-1/2	Class 3000	SW	CS, ASTM A105, ASME B16.11	L30SBDB
45 ELL		3/4 – 1-1/2	Class 3000	SW	CS, ASTM A105, ASME B16.11	L30SBDA
Tee	03	3/4 – 1-1/2	Class 3000	THRD	CS, ASTM A105, ASME B16.11	L31SBA
Tee		3/4 – 1-1/2	Class 3000	SW	CS, ASTM A105, ASME B16.11	L31SBD
Tee (RED)		3/4 – 1-1/2	Class 3000	SW	CS, ASTM A105, ASME B16.11	L31SBDD
Plug	03	3/4 – 1-1/2		THRD	CS, ASTM A105, round head, ASME B16.11	L370ABW
Plug		3/4 – 1-1/2		PE	CS, ASTM A105, round head, ASME B16.11	L370AEW
Coupling		3/4 – 1-1/2	Class 3000	SW	CS, ASTM A105, ASME B16.11	L34SBDH
Cap		3/4 – 1-1/2	Class 3000	SW	CS, ASTM A105, ASME B16.11	L37SBDX
Reducer (CONC)		2 – 2	XS/80	Weld	CS, ASTM A234-WPB-S, ASME B16.9	L55NA1DA
Reducer (ECC)		2 – 2	XS/80	Weld	CS, ASTM A234-WPB-S, ASME B16.9	L55NA1DB
Weldolet	05	2 – 2	XS/80	Weld	CS, ASTM A105, MSS SP-97	L56NA1H
90 LR ELL		2 – 2	XS/80	Weld	CS, ASTM A234-WPB-S, ASME B16.9	L50NA1BC
45 LR ELL		2 – 2	XS/80	Weld	CS, ASTM A234-WPB-S, ASME B16.9	L50NA1AC
Tee		2 – 2	XS/80	Weld	CS, ASTM A234-WPB-S, ASME B16.9	L51NA1
Tee (RED)		2 – 2	XS/80	Weld	CS, ASTM A234-WPB-S, ASME B16.9	L51NA1D
Cap		2 – 2	XS/80	Weld	CS, ASTM A234-WPB-S, ASME B16.9	L57NA1R
Reducer (CONC)		3 – 24	STD	Weld	CS, ASTM A234-WPB-S, ASME B16.9	L55MA1DA
Reducer (ECC)		3 – 24	STD	Weld	CS, ASTM A234-WPB-S, ASME B16.9	L55MA1DB
Weldolet	05	3 – 8	STD	Weld	CS, ASTM A105, MSS SP-97	L56MA1H
90 LR ELL		3 – 24	STD	Weld	CS, ASTM A234-WPB-S, ASME B16.9	L50MA1BC
45 LR ELL		3 – 24	STD	Weld	CS, ASTM A234-WPB-S, ASME B16.9	L50MA1AC
Tee		3 – 24	STD	Weld	CS, ASTM A234-WPB-S, ASME B16.9	L51MA1
Tee (RED)		3 – 24	STD	Weld	CS, ASTM A234-WPB-S, ASME B16.9	L51MA1D
Cap		3 – 24	STD	Weld	CS, ASTM A234-WPB-S, ASME B16.9	L57MA1R

ITEM	NOTES	NPS	SCH/RAT	ENDS	DESCRIPTION	ITEM CODE
FITTINGS						
Reducer (CONC)		28 – 42	STD	Weld	CS, ASTM A234-WPB-S, ASME B16.9	L55MA1DA
Reducer (ECC)		28 – 42	STD	Weld	CS, ASTM A234-WPB-S, ASME B16.9	L55MA1DB
90 LR ELL		28 – 42	STD	Weld	CS, ASTM A234-WPB-S, ASME B16.9	L50MA1BC
45 LR ELL		28 – 42	STD	Weld	CS, ASTM A234-WPB-S, ASME B16.9	L50MA1AC
Tee		28 – 42	STD	Weld	CS, ASTM A234-WPB-S, ASME B16.9	L51MA1
Tee (RED)		28 – 42	STD	Weld	CS, ASTM A234-WPB-S, ASME B16.9	L51MA1D
Cap		28 – 42	STD	Weld	CS, ASTM A234-WPB-S, ASME B16.9	L57MA1R
VALVES						
Gate	15	3/4 – 1-1/2	Class 150	RF	CS body, API #8 trim, RP, BB	L20BA3HD
Gate		1/2 – 1/2	Class 800	MSW/FSW	CS body, API #8 trim, RP, BB, EXTD BDY	L20KAXHDM
Gate	02	3/4 – 1-1/2	Class 800	MSW/FNPT	CS body, API #8 trim, RP, BB, EXTD BDY	L20KAYHDM
Gate		3/4 – 1-1/2	Class 800	SW	CS body, API #8 trim, RP, BB	L20KA1HD
Gate	325	3/4 – 1-1/2	Class 800	SW	CS body, API #8 trim, FP, BB	L20KA1DD
Gate	06	3/4 – 1-1/2	Class 800	T/SW	CS body, API #8 trim, BB	L20KA7HD
Gate	309	3/4 – 1-1/2	Class 800	T/SW	CS body, API #8 trim, RP, BELLOW SEAL, WB	L20KA7MDL
Gate	309	3/4 – 1-1/2	Class 800	SW	CS body, API #8 trim, RP, BELLOW SEAL, WB	L20KA1MDL
Gate		2 - 8	Class 150	RF	CS body, API #8 trim, FP, BB	L20BA3DD
Gate		10 – 24	Class 150	RF	CS body, API #8 trim, FP, BB, GO	L20BA3DDF
Knife Gate	329	14 – 24	Class 150	RF	CS body, 13CR trim, Aflas Seals, GO	L20BA3UDF
Knife Gate	329	26 – 42	Class 150	RF	CS body, 13CR trim, Aflas Seals, B16.47"B", GO	L20BA3UDFZ
Globe	307	3/4 – 1-1/2	Class 800	SW	CS body, API #8 trim, BB	L21KA1DE
Globe	309, 307	3/4 – 1-1/2	Class 800	THRD	CS body, API #8 trim, BELLOW SEAL, WB	L21KA0JEL
Globe	309, 307	3/4 – 1-1/2	Class 800	SW	CS body, API #8 trim, BELLOW SEAL, WB	L21KA1JEL
Globe	307	2 - 3	Class 150	RF	CS body, API #8 trim, BB	L21BA3DE
Globe	307	4 - 8	Class 150	RF	CS body, API #8 trim, BB, GO	L21BA3DEB
Check	61,328	3/4 – 1-1/2	Class 800	SW	CS body, API #8 trim, Piston, BC, HORIZ.	L22KA1TEF
Check	62,328	2 – 24	Class 150	RF	CS body, API #8 trim, BC, Swing	L22BA3PE
Check	62,328	6 – 24	Class 150	RF	CS body, API #8 trim, Dual Plate	L22BA3LEH
Ball	26, 101	2 – 12	Class 150	RF	CS, (A216-WCB) T3 MOD, RP, ORBIT	L25BB3FB
Ball	101, 327	2 – 6	Class 150	RF	CS body, 316 SS trim, RP, TFE seat, FS	L25BA3CE
Ball	101, 327	8 – 24	Class 150	RF	CS body, 316 SS trim, RP, TFE seat, FS, GO	L25BA3CEM
Butterfly	101	2 – 24	Class 150	RF	CS body, 316 SS trim, Flg, Triple Offset GO	L26BA3TJM
FLANGES	02					
Socket Weld		3/4 – 1-1/2	Class 150	RF	CS, ASTM A105, ASME B16.5, XS	L40BA3BN
Socket Weld	12	3/4 – 1-1/2	Class 300	RF	CS, ASTM A105, ASME B16.5, XS	L40FA3BN
Blind		3/4 – 24	Class 150	RF	CS, ASTM A105, ASME B16.5	L43BA3
Blind Spectacle		3/4 – 18	Class 150	RF	CS, ASTM A516-70, ASME B16.48	L45BA3E
Spacer Ring		20 – 24	Class 150	RF	CS, ASTM A516-70, ASME B16.48	L45BA3F
Blind Plate		20 – 24	Class 150	RF	CS, ASTM A516-70, ASME B16.48	L45BA3G
Weld Neck		2 – 2	Class 150	RF	CS, ASTM A105, ASME B16.5, XS/80 Bore	L40BA3DN
Weld Neck	12	2 – 2	Class 300	RF	CS, ASTM A105, ASME B16.5, XS/80 Bore	L40FA3DN
Weld Neck		3 – 24	Class 150	RF	CS, ASTM A105, ASME B16.5, STD Bore	L40BA3DM
Weld Neck	12	3 – 24	Class 300	RF	CS, ASTM A105, ASME B16.5, STD Bore	L40FA3DM
Weld Neck	203	28 - 42	Class 150	RF	CS, ASTM A105, ASME B16.47"B", STD Bore	L48BA3DM
Pair WN Orifice		1 – 2	Class 300	RF	CS, ASTM A105, ASME B16.36, NPS ½ SW taps, 80/XS Bore	L42FA3DNL
Pair WN Orifice	17	3 – 18	Class 300	RF	CS, ASTM A105, ASME B16.36, NPS ½ SW taps, Std Bore	L42FA3DML
GASKETS		3/4 – 24	Class 150		Spiral wound type 316L SS w/ flexible Inhibited Graphite filler, ASME B16.20, w/inner ring.	L61BF1CAC
	301	3/4 – 24	Class 150		KAM style, 316L SS w/APX-2 Graphite, EXH-SU-5151	L61BF1ZA
	12	3/4 – 24	Class 300		Spiral wound type 316L SS w/ flexible Inhibited Graphite filler, ASME B16.20, w/inner ring.	L61FF1CAC
	12, 301	3/4 – 24	Class 300		KAM style, 316L SS w/APX-2 Graphite, EXH-SU-5151	L61FF1ZA
	203	28 - 42	Class 150		Spiral wound type 316L SS w/ flexible Inhibited Graphite filler, ASME B16.20, w/inner ring.	L61BF1CAC
BOLTING Stud Bolts		3/4 – 42			ASTM A193, Gr B7 stud w/ 2 heavy hex nuts ASTM A194, Gr 2H	L620BM

90° BRANCH CONNECTION, Legend and Chart

BRANCH	42	38	36	34	32	30	28	24	20	18	16	14	12	10	8	6	4	3	2	1-1/2	1	3/4
42	T																					
38	E	T																				
36	E	E	T																			
34	E	E	E	T																		
32	E	E	E	E	T																	
30	E	E	E	E	E	T																
28	E	E	E	E	E	E	T															
24	E	E	E	E	E	E	E	T														
20	E	E	E	E	E	E	E	E	T													
18	P	E	E	E	E	E	E	E	E	T												
16	P	P	E	E	E	E	E	E	E	E	T											
14	P	P	P	P	E	E	E	E	E	E	E	T										
12	P	P	P	P	P	P	E	E	E	E	E	E	T									
10	P	P	P	P	P	P	P	E	E	E	E	E	E	T								
8	W	W	W	W	W	W	W	W	E	E	E	E	E	E	T							
6	W	W	W	W	W	W	W	W	W	W	E	E	E	E	E	T						
4	W	W	W	W	W	W	W	W	W	W	W	W	W	E	E	E	T					
3	W	W	W	W	W	W	W	W	W	W	W	W	W	W	E	E	E	T				
2	W	W	W	W	W	W	W	W	W	W	W	W	W	W	W	W	E	E	T			
1-1/2	S	S	S	S	S	S	S	S	S	S	S	S	S	S	S	S	S	S	S	T		
1	S	S	S	S	S	S	S	S	S	S	S	S	S	S	S	S	S	S	S	E	T	
3/4	S	S	S	S	S	S	S	S	S	S	S	S	S	S	S	S	S	S	S	E	E	T
	42	38	36	34	32	30	28	24	20	18	16	14	12	10	8	6	4	3	2	1-1/2	1	3/4

HEADER SIZE

E Reducing Tee
P Branch Weld w/ Reinforcing Pad (Pad thickness equals run pipe thickness. Pad width equals 1/2 branch OD.)
T Equal Tee
S Sockolet
W Weldolet (Note 05)

NOTES:

03 THREADED JOINTS ARE PERMITTED ONLY AT OUTLET OF VENT AND DRAIN VALVES,AT HYDROSTATIC CONNECTIONS, AT OUTLET OF INSTRUMENT TAKE-OFF VALVES, AND TO MATCH EQUIP.
05 INTEGRALLY REINFORCED BRANCH CONNECTIONS ARE PERMITTED OUTSIDE THE SIZES SHOWN IN THE BRANCH CONNECTION TABLE. DESIGNER SHALL CHECK WELD THICKNESS OF INTEGRALLY REINFORCED BRANCH CONNECTIONS TO DETERMINE IF PWHT IS REQUIRED.
06 THESE VALVES SHALL BE USED ONLY FOR VENT, DRAIN, AND INSTRUMENT CONNECTIONS.
12 TO BE USED ONLY TO MATCH CLASS 300 RATED FLANGE CONNECTIONS AT CONTROL VALVES AND SPECIAL EQUIPMENT.
15 TO BE USED WHEN MATING TO FLANGED NOZZLES.
26 TO BE USED ONLY WHEN INDICATED ON P&ID.
61 INSTALL IN HORIZONTAL POSITION WITH COVER UP.
62 INSTALL IN HORIZONTAL POSITION WITH COVER UP OR IN VERTICAL POSITION WITH UPWARD FLOW.
301 FOR USE IN VOC REGULATED SERVICES; IN FLANGES WITH SLIGHTLY DAMAGED GASKET SEATING FACES; OR IN FLANGES WITH A HISTORY OF LEAKING.
307 LIMITED TO THROTTLING SERVICES UP TO 150 PSI DIFFERENTIAL PRESSURE. FOR SERVICE APPLICATIONS WITH DIFFERENTIAL PRESSURES GREATER THAN 150 PSI, CONSULT WITH THE VALVE MANUFACTURER AND CHEVRON PIPING & VALVE SME FOR SUITABILITY.
325 USE FULL PORT VALVES IN LOCATIONS REQUIRING FULL OPENINGS SUCH AS UPSTREAM AND DOWNSTREAM OF RELIEF VALVES OR IN HORIZONTAL LINES CONTAINING HAZARDOUS LIQUIDS.
327 LIMITED TO PROCESS TEMPERATURES UP TO 250°F (121°C)
328 SIZING AND LOCATION OF CHECK VALVES IS CRITICAL FOR RELIABLE OPERATION. SEE SECTION 6.0 (25) IN THE GENERAL SPECIFICATION FOR MORE INFORMATION.
329 IN GENERAL, KNIFE GATE VALVES ARE TO BE RESTRICTED TO LARGE DIAMETER, LOW PRESSURE, LOW TEMPERATURE SERVICES SUCH AS RELIEF AND FLARE HEADERS.
17 USE WELD NECK FLANGE AND THROAT TAPS NPS 20" AND LARGER
92 USE RESTRICTED TO THERMOWELL ASSEMBLY ONLY
101 TO BE USED WHERE TIGHT SHUT-OFF IS REQUIRED.
309 USE BELLOW SEAL GATE VALVES FOR ALL IN-KIND PEPLACEMENT ONLY. INSTALL NEW BELLOW SEALVALVES WHEN REQUIRED BY PROJECT FOR PERMIT PURPOSES.
203 FLANGES AND GASKETS SHALL CONFORM TO ASME B16.47 SERIES B.

SERVICE:

- Hydrocarbon Gas, Vapor, Liquid with trace H2S
- Inert Gas, Nitrogen
- LPG and LPG/HC with trace H2S (USE TO MATCH TO EXISTING PIPING; CLASS 300 RECOMMENDED FOR NEW SYSTEMS)
- Primary Wash & Re-Pulp Filtrate, Primary Wax Mix, Solvent, Waxy Oil
- Sweet Gas, ,
- Flare
- Produced Water (non-sour)
- Aqueous Ammonia
- Caustic (<30% Conc. & below 140°F)

CUSA-CSB-0019044
EPA

		LIMITED BY:	Flanges
SERVICE:	Steam/Condensate (Non Boiler Code)	MATERIAL:	Carbon Steel
RATING CLASS:	150 RF, ASME B16.5-2009	DESIGN CODE:	ASME B31.3-2008
TEMPERATURE LIMIT:	-20F to 450F	STRESS RELIEF:	NONE
NOMINAL CORROSION ALLOWANCE:	0.063 in. (0.05 in. MIN for ¾")	EXAMINATION:	5% RT, PT & Visual
VALVE TRIM:	API Trim #5 (13CR & FHF)		

PRESSURE - TEMPERATURE RATINGS				NOTE: HYDROTEST @ AMBIENT = 450 psig	
TEMP F	-20 to 100	200	300	400	450
psig	285	260	230	200	185
TEMP C	-29 to 38	93	149	204	232
kPag	1965	1795	1585	1380	1275

For NPS 3/4 through NPS 24 (Full flange ratings per ASME B16.5, Table 2-1.1.)

ITEM	NOTES	NPS	SCH/RAT	ENDS	DESCRIPTION	ITEM CODE
PIPE						
	326	3/4– 1-1/2	XS/80	PE	CS, SMLS, ASTM A106-B	L11NA1B
	326	2 - 2	XS/80	BE	CS, ASTM A106-B	L11NA2A
		3 – 24	STD	BE	CS, ASTM A106-B	L11MA2A
NIPPLES						
Branch		3/4 – 1-1/2	160	PE	CS, SMLS, ASTM A106-B	L34LAEJ
Branch		3/4 – 1-1/2	160	TBE	CS, SMLS, ASTM A106-B	L34LABJ
Swage (CONC)		3/4 – 1-1/2	XS/80	BBE	CS, ASTM A234-WPB-S, MSS SP-95	L55NA1VA
Swage (CONC)		3/4 – 1-1/2	160	BLE-TSE	CS, ASTM A234-WPB-S, MSS SP-95	L35LBMQ
FITTINGS Sockolet		3/4 – 3/4	Class 6000	SW	CS, ASTM A105, MSS SP-97	L36VBDT
Sockolet		1 – 1-1/2	Class 3000	SW	CS, ASTM A105, MSS SP-97	L36SBDT
Thredolet	03	3/4 – 1-1/2	Class 3000	THRD	CS, ASTM A105, MSS SP-97	L36SBAT
SW Elbolet		3/4 – 3/4	Class 6000	SW	CS, ASTM A105	L36VBDU
SW Elbolet		3/4 – 1-1/2	Class 3000	SW	CS, ASTM A105	L36SBDU
Latrolet	92	1 – 1-1/2	XS/80	Weld	CS, ASTM A105	L56NA1K
Weldolet	05	1 – 1-1/2	XS/80	Weld	CS, ASTM A105, MSS SP-97	L56NA1H
Plug	03	3/4 – 1-1/2		THRD	CS, ASTM A105, round head, ASME B16.11	L370ABW
Plug		3/4 – 1-1/2		PE	CS, ASTM A105, round head, ASME B16.11	L370AEW
90 ELL		3/4 – 1-1/2	Class 3000	SW	CS, ASTM A105, ASME B16.11	L30SBDB
45 ELL		3/4 – 1-1/2	Class 3000	SW	CS, ASTM A105, ASME B16.11	L30SBDA
Tee		3/4 – 1-1/2	Class 3000	SW	CS, ASTM A105, ASME B16.11	L31SBD
Tee (RED)		3/4 – 1-1/2	Class 3000	SW	CS, ASTM A105, ASME B16.11	L31SBDD
Coupling		3/4 – 1-1/2	Class 3000	SW	CS, ASTM A105, ASME B16.11	L34SBDH
Cap		3/4 – 1-1/2	Class 3000	SW	CS, ASTM A105, ASME B16.11	L37SBDX
Reducer (CONC)		2 – 2	XS/80	Weld	CS, ASTM A234-WPB-W, ASME B16.9	L55NA1DA
Reducer (ECC)		2 – 2	XS/80	Weld	CS, ASTM A234-WPB-W, ASME B16.9	L55NA1DB
Weldolet	05	2 – 2	XS/80	Weld	CS, ASTM A105, MSS SP-97	L56NA1H
90 LR ELL		2 – 2	XS/80	Weld	CS, ASTM A234-WPB-W, ASME B16.9	L50NA1BC
45 LR ELL		2 – 2	XS/80	Weld	CS, ASTM A234-WPB-W, ASME B16.9	L50NA1AC
Tee		2 – 2	XS/80	Weld	CS, ASTM A234-WPB-W, ASME B16.9	L51NA1
Tee (RED)	99	2 – 2	XS/80	Weld	CS, ASTM A234-WPB-W, ASME B16.9	L51NA1D
Cap		2 – 2	XS/80	Weld	CS, ASTM A234-WPB-S, ASME B16.9	L57NA1R
Reducer (CONC)		3 – 24	STD	Weld	CS, ASTM A234-WPB-W, ASME B16.9	L55MA1DA
Reducer (ECC)		3 – 24	STD	Weld	CS, ASTM A234-WPB-W, ASME B16.9	L55MA1DB
Weldolet	05	3 – 8	STD	Weld	CS, ASTM A105, MSS SP-97	L56MA1H
90 LR ELL		3 – 24	STD	Weld	CS, ASTM A234-WPB-W, ASME B16.9	L50MA1BC
45 LR ELL		3 – 24	STD	Weld	CS, ASTM A234-WPB-W, ASME B16.9	L50MA1AC
Tee		3 – 24	STD	Weld	CS, ASTM A234-WPB-W, ASME B16.9	L51MA1
Tee (RED)	99	3 – 24	STD	Weld	CS, ASTM A234-WPB-W, ASME B16.9	L51MA1D
Cap		3 – 24	STD	Weld	CS, ASTM A234-WPB-S, ASME B16.9	L57MA1R

ITEM	NOTES	NPS	SCH/RAT	ENDS	DESCRIPTION	ITEM CODE
VALVES						
Gate	15	3/4 – 1-1/2	Class 150	RF	CS body w/API#5 trim, RP, WB	L20BA3MF
Gate		3/4 – 1-1/2	Class 800	SW	CS body w/API #5 trim, RP, WB	L20KA1MF
Gate	325	3/4 – 1-1/2	Class 800	SW	CS body w/API #5 trim, FP, WB	L20KA1FF
Gate	06	3/4 – 1-1/2	Class 800	T/SW	CS body w/API #5 trim, RP, WB	L20KA7MF
Gate		2 - 8	Class 150	RF	CS body w/API #5 trim, BB, FP	L20BA3DF
Gate		10 – 24	Class 150	RF	CS body w/API #5 trim, BB, FP, GO	L20BA3DFF
Globe	307	3/4 – 1-1/2	Class 800	SW	CS body w/API #5 trim, WB	L21KA1JG
Globe	307	2 - 3	Class 150	RF	CS body w/API #5 trim, BB	L21BA3DG
Globe	307	4 - 8	Class 150	RF	CS body w/API #5 trim, BB, GO	L21BA3DGB
Angle		3/4 – 1-1/2	Class 600	SW	CS body w/API #5 trim, WB	L23JA1JG
Check	61	3/4 – 1-1/2	Class 800	SW	CS body w/API #5 trim, BC, HORIZ., Piston	L22KA1TGF
Check	62	2 – 24	Class 150	RF	CS body w/API #5 trim, BC, Swing	L22BA3PG
FLANGES	02, 104,326					
Socket Weld		3/4 – 1-1/2	Class 150	RF	CS, ASTM A105, ASME B16.5, XS/80	L40BA3BN
Blind		3/4 – 24	Class 150	RF	CS, ASTM A105, ASME B16.5	L43BA3
Blind Spectacle		3/4 – 18	Class 150	RF	CS, ASTM A516-70, ASME B16.48	L45BA3E
Spacer Ring		20 – 24	Class 150	RF	CS, ASTM A516-70, ASME B16.48	L45BA3F
Blind Plate		20 – 24	Class 150	RF	CS, ASTM A516-70, ASME B16.48	L45BA3G
Weld Neck		2 – 2	Class 150	RF	CS, ASTM A105, ASME B16.5, XS/80 Bore	L40BA3DN
Weld Neck	12	2 – 2	Class 300	RF	CS, ASTM A105, ASME B16.5, XS/80 Bore	L40FA3DN
Weld Neck		3 – 24	Class 150	RF	CS, ASTM A105, ASME B16.5, STD Bore	L40BA3DM
Weld Neck	11	3 – 24	Class 150	FF	CS, ASTM A105, ASME B16.5, STD Bore	L40BA2DM
Weld Neck	12	3 – 24	Class 300	RF	CS, ASTM A105, ASME B16.5, STD Bore	L40FA3DM
Pair WN Orifice		1 – 2	Class 300	RF	CS, ASTM A105, ASME B16.36, ½ SW taps, XS/80 Bore	L42FA3DNL
Pair WN Orifice	17	3 – 24	Class 300	RF	CS, ASTM A105, ASME B16.36, ½ SW taps, STD Bore	L42FA3DML
GASKETS	14					
		3/4 – 24	Class 150		Spiral wound type 316L SS w/ flexible Inhibited Graphite filler, ASME B16.20, w/inner ring	L61BF1CAC
	301	3/4 – 24	Class 150		KAM style, 316L SS w/APX-2 Graphite, EXH-SU-5151	L61BF1ZA
	12	3/4 – 24	Class 300		Spiral wound type 316L SS w/ flexible Inhibited Graphite filler, ASME B16.20, w/inner ring.	L61FF1CAC
	12, 301	3/4 – 24	Class 300		KAM style, 316L SS w/APX-2 Graphite, EXH-SU-5151	L61FF1ZA
BOLTING						
Stud Bolts		3/4 – 24			ASTM A193, B7 stud w/ 2 heavy hex nuts ASTM A194, GR 2H	L620BM

90° BRANCH CONNECTION, Legend and Chart

BRANCH \ HEADER SIZE	24	20	18	16	14	12	10	8	6	4	3	2	1-1/2	1	3/4	1/2
24	T															
20	E	T														
18	E	E	T													
16	E	E	E	T												
14	E	E	E	E	T											
12	E	E	E	E	E	T										
10	E	E	E	E	E	E	T									
8	W	E	E	E	E	E	E	T								
6	W	W	W	E	E	E	E	E	T							
4	W	W	W	W	W	W	E	E	E	T						
3	W	W	W	W	W	W	W	E	E	E	T					
2	W	W	W	W	W	W	W	W	W	E	E	T				
1-1/2	S	S	S	S	S	S	S	S	S	S	S	S	T			
1	S	S	S	S	S	S	S	S	S	S	S	S	E	T		
3/4	S	S	S	S	S	S	S	S	S	S	S	S	E	E	T	
1/2	S	S	S	S	S	S	S	S	S	S	S	S	E	E	E	T

E Reducing Tee
P Branch Weld w/ Reinforcing Pad (Pad thickness equals run pipe thickness. Pad width equals 1/2 branch OD.)
T Equal Tee
S Sockolet
W Weldolet (Note 05)

NOTES:

01 WHERE A PIPE SCHEDULE IS SHOWN UNDER "SCH/RAT," IT SHALL BE ADEQUATE FOR THE FULL FLANGE RATING. WHERE "CALC" IS SHOWN, THE PRESSURE LIMIT MAY BE LOWER THAN FULL FLANGE RATING.
02 ALL BUTT-WELDED COMPONENT THICKNESSES SHALL MATCH PIPE THICKNESS.
03 THREADED JOINTS ARE PERMITTED ONLY AT OUTLET OF VENT AND DRAIN VALVES, AT HYDROSTATIC CONNECTIONS, AT OUTLET OF INSTRUMENT TAKE-OFF VALVES, AND TO MATCH EQUIPMENT.
05 INTEGRALLY REINFORCED BRANCH CONNECTIONS ARE PERMITTED OUTSIDE THE SIZES SHOWN IN THE BRANCH CONNECTION TABLE. DESIGNER SHALL CHECK WELD THICKNESS OF INTEGRALLY REINFORCED BRANCH CONNECTIONS TO DETERMINE IF PWHT IS REQUIRED.
06 THESE VALVES SHALL BE USED ONLY FOR VENT, DRAIN, AND INSTRUMENT CONNECTIONS.
11 PROVIDE FLAT FACE FLANGES ADJACENT TO FLAT FACE EQUIPMENT NOZZLES.
12 TO BE USED ONLY TO MATCH CLASS 300 RATED FLANGE CONNECTIONS AT CONTROL VALVES AND SPECIAL EQUIPMENT.
14 FULL FACE GASKETS SHALL BE USED AT FLAT-FACED FLANGES.
15 TO BE USED WHEN MATING TO FLANGED NOZZLES.
19 SCH 160 PIPE AND PIPE NIPPLES SHALL BE USED FOR THREADED CONNECTIONS FOR NPS 3/4 - 1-1/2.
59 USE BRANCH WELD WITH REINFORCEMENT PAD WHEN THE MINIMUM HEADER WALL THICKNESS (SPECIFIED OR MEASURED) AT THE BRANCH LOCATION EXCEEDS XXS, WHERE XXS EQUALS THE WALL THICKNESS VALUE FOR THE LETTER SYMBOL SHOWN IN THE LEGEND. USE FULL ENCIRCLEMENT REINFORCEMENT (LENGTH EQUALS TWICE BRANCH PIPE OD) WHEN THE WALL IS LESS THAN OR EQUAL TO XXS.
61 INSTALL IN HORIZONTAL POSITION WITH COVER UP.
62 INSTALL IN HORIZONTAL POSITION WITH COVER UP OR IN VERTICAL POSITION WITH UPWARD FLOW.
301 FOR USE IN VOC REGULATED SERVICES; IN FLANGES WITH SLIGHTLY DAMAGED GASKET SEATING FACES; OR IN FLANGES WITH A HISTORY OF LEAKING.
307 LIMITED TO THROTTLING SERVICES UP TO 150 PSI DIFFERENTIAL PRESSURE. FOR SERVICE APPLICATIONS WITH DIFFERENTIAL PRESSURES GREATER THAN 150 PSI, CONSULT WITH THE VALVE MANUFACTURER AND CHEVRON PIPING & VALVE SME FOR SUITABILITY.
325 USE FULL PORT VALVES IN LOCATIONS REQUIRING FULL OPENINGS SUCH AS UPSTREAM AND DOWNSTREAM OF RELIEF VALVES OR IN HORIZONTAL LINES CONTAINING HAZARDOUS LIQUIDS.
326 USE OF MECHANICAL COMPRESSION (LOKRING) FITTINGS, UP TO 3" DIAMETER, IS ACCEPTABLE FOR ALL SERVICES IN THIS PIPE CLASS. SEE SECTION 6.0 (18) IN THE GENERAL SPECIFICATION FOR TEMPERATURE AND PRESSURE LIMITS.
17 USE WELD NECK FLANGES AND THROAT TAPS NPS 20 " AND LARGER
92 USE RESTRICTED TO THERMOWELL ASSEMBLY ONLY
104 USE CLASS 300 FLANGES WHEN MATING TO CONTROL VALVES AND EQUIPMENTS

SERVICE:

- Steam, Cond (Non-Boiler Code)
- Boiler feedwater (Non-Boiler Code)

CUSA-CSB-0019047
EPA

1CS23 replaces old AB4 Pipe class

		LIMITED BY:	Flanges
SERVICE:	Process (NACE)	MATERIAL:	Carbon Steel
RATING CLASS:	150 RF, ASME B16.5-2009	DESIGN CODE:	ASME B31.3-2008
TEMPERATURE LIMIT:	-20F to 450F	STRESS RELIEF:	NONE
NOMINAL CORROSION ALLOWANCE:	0.125 in. (0.092 in. MIN)	EXAMINATION:	5% RT, PT & Visual
VALVE TRIM:	API Trim #12 (316SS & HF)		

PRESSURE - TEMPERATURE RATINGS			NOTE: HYDROTEST @ AMBIENT = 450 psig		
TEMP F	-20 to 100	200	300	400	450
psig	285	260	230	200	185
TEMP C	-29 to 38	93	149	204	232
kPag	1965	1795	1585	1380	1275

For NPS 3/4 through NPS 30 (Full flange ratings per ASME B16.5 and ASME B16.47, Tables 2-1.1.)

ITEM		NOTES	NPS	SCH/RAT	ENDS	DESCRIPTION	ITEM CODE
PIPE			3/4 – 1-1/2	160	PE	CS, SMLS, ASTM A106-B	L11LA1B
			2 – 2	XS/80	BE	CS, SMLS , ASTM A106-B	L11NA2A
			3 – 24	STD	BE	CS, SMLS , ASTM A106-B	L11MA2A
			26 – 28	STD	BE	CS, SMLS/DSAW, API-5L PSL2 (Ej=.95)	L14MA2A
			30 – 42	XS	BE	CS, SMLS/DSAW, API-5L PSL2 (Ej=.95)	L14NA2A
NIPPLES	Branch		3/4 – 1-1/2	160	PE	CS, SMLS , ASTM A106-B	L34LAEJ
	Branch		3/4 – 1-1/2	XXS	TOE-POE	CS, SMLS , ASTM A106-B	L34PAHJ
	Swage (CONC)		3/4 – 1-1/2	160	BBE	CS, ASTM A234-WPB-S, MSS SP-95	L55LA1VA
	Swage (CONC)		3/4 – 1-1/2	XXS	BLE-TSE	CS, ASTM A234-WPB-S, MSS SP-95	L35PBMQ
FITTINGS	Sockolet		3/4 – 1-1/2	Class 6000	SW	CS, ASTM A105, MSS SP-97	L36VBDT
	Thredolet	03	3/4 – 1-1/2	Class 6000	THRD	CS, ASTM A105, MSS SP-97	L36VBAT
	SW Elbolet		3/4 – 1-1/2	Class 6000	SW	CS, ASTM A105	L36VBDU
	Latrolet	92	3/4 – 1-1/2	160	Weld	CS, ASTM A105	L56LA1K
	Weldolet	05	3/4 – 1-1/2	160	Weld	CS, ASTM A105, MSS SP-97	L56LA1H
	90 ELL		3/4 – 1-1/2	Class 6000	SW	CS, ASTM A105, ASME B16.11	L30VBDB
	45 ELL		3/4 – 1-1/2	Class 6000	SW	CS, ASTM A105, ASME B16.11	L30VBDA
	Tee	03	3/4 – 1-1/2	Class 6000	THRD	CS, ASTM A105, ASME B16.11	L31VBA
	Tee		3/4 – 1-1/2	Class 6000	SW	CS, ASTM A105, ASME B16.11	L31VBD
	Tee (RED)		3/4 – 1-1/2	Class 6000	SW	CS, ASTM A105, ASME B16.11	L31VBDD
	Plug	03	3/4 – 1-1/2		THRD	CS, ASTM A105, round head, ASME B16.11	L370ABW
	Plug		3/4 – 1-1/2		PE	CS, ASTM A105, round head, ASME B16.11	L370AEW
	Coupling		3/4 – 1-1/2	Class 6000	SW	CS, ASTM A105, ASME B16.11	L34VBDH
	Cap		3/4 – 1-1/2	Class 6000	SW	CS, ASTM A105, ASME B16.11	L37VBDX
	Reducer (CONC)		2 – 2	XS/80	Weld	CS, ASTM A234-WPB-S, ASME B16.9	L55NA1DA
	Reducer (ECC)		2 – 2	XS/80	Weld	CS, ASTM A234-WPB-S, ASME B16.9	L55NA1DB
	Weldolet	05	2 – 2	XS/80	Weld	CS, ASTM A105, MSS SP-97	L56NA1H
	90 LR ELL		2 – 2	XS/80	Weld	CS, ASTM A234-WPB-S, ASME B16.9	L50NA1BC
	45 LR ELL		2 – 2	XS/80	Weld	CS, ASTM A234-WPB-S, ASME B16.9	L50NA1AC
	Tee		2 – 2	XS/80	Weld	CS, ASTM A234-WPB-S, ASME B16.9	L51NA1
	Tee (RED)	99	2 – 2	XS/80	Weld	CS, ASTM A234-WPB-S, ASME B16.9	L51NA1D
	Cap		2 – 2	XS/80	Weld	CS, ASTM A234-WPB-S, ASME B16.9	L57NA1R
	Reducer (CONC)		3 – 28	STD	Weld	CS, ASTM A234-WPB-S, ASME B16.9	L55MA1DA
	Reducer (ECC)		3 – 28	STD	Weld	CS, ASTM A234-WPB-S, ASME B16.9	L55MA1DB
	Weldolet	05	3 – 8	STD	Weld	CS, ASTM A105, MSS SP-97	L56MA1H
	90 LR ELL		3 – 28	STD	Weld	CS, ASTM A234-WPB-S, ASME B16.9	L50MA1BC
	45 LR ELL		3 – 28	STD	Weld	CS, ASTM A234-WPB-S, ASME B16.9	L50MA1AC
	Tee		3 – 28	STD	Weld	CS, ASTM A234-WPB-S, ASME B16.9	L51MA1
	Tee (RED)	99	3 – 28	STD	Weld	CS, ASTM A234-WPB-S, ASME B16.9	L51MA1D
	Cap		3 – 28	STD	Weld	CS, ASTM A234-WPB-S, ASME B16.9	L57MA1R
	Reducer (CONC)		30 – 42	XS	Weld	CS, ASTM A234-WPB-S, ASME B16.9	L55NA1DA
	Reducer (ECC)		30 – 42	XS	Weld	CS, ASTM A234-WPB-S, ASME B16.9	L55NA1DB
	90 LR ELL		30 – 42	XS	Weld	CS, ASTM A234-WPB-S, ASME B16.9	L50NA1BC
	45 LR ELL		30 – 42	XS	Weld	CS, ASTM A234-WPB-S, ASME B16.9	L50NA1AC
	Tee		30 – 42	XS	Weld	CS, ASTM A234-WPB-S, ASME B16.9	L51NA1
	Tee (RED)	99	30 – 42	XS	Weld	CS, ASTM A234-WPB-S, ASME B16.9	L51NA1D
	Cap		30 – 42	XS	Weld	CS, ASTM A234-WPB-S, ASME B16.9	L57NA1R

CUSA-CSB-0019048
EPA

ITEM	NOTES	NPS	SCH/RAT	ENDS	DESCRIPTION	ITEM CODE
VALVES						
Gate	15	3/4 – 1-1/2	Class 150	RF	CS body, API #12 trim, RP, BB, NACE	L20BA3HT9
Gate		1/2 – 1/2	Class 800	MSW/FSW	CS body, API #12 trim, RP, BB, EXTD BDY, NACE	L20KAXHTM9
Gate	02	3/4 – 1-1/2	Class 800	MSW/FNPT	CS body, API #12 trim, RP, BB, EXTD BDY, NACE	L20KAYHTM9
Gate		3/4 – 1-1/2	Class 800	SW	CS body, API #12 trim, RP, BB, NACE	L20KA1HT9
Gate	325	3/4 – 1-1/2	Class 800	SW	CS body, API #12 trim, FP, BB, NACE	L20KA1DT9
Gate	06	3/4 – 1-1/2	Class 800	T/SW	CS body, API #12 trim, RP, BB, NACE	L20KA7HT9
Gate	309	3/4 – 1-1/2	Class 800	T/SW	CS body, API #12 trim,RP,BELLOW SL,WB, NACE	L20KA7MTL9
Gate	309	3/4 – 1-1/2	Class 800	SW	CS body, API #12 trim,RP,BELLOW SL,WB, NACE	L20KA1MTL9
Gate		2 - 8	Class 150	RF	CS body, API #12 trim, BB, FP, NACE	L20BA3CT9
Gate		10 – 24	Class 150	RF	CS body, API #12 trim, BB, FP, GO, NACE	L20BA3CTF9
Knife Gate	329	14 – 24	Class 150	RF	CS body, 316SS trim, Aflas Seals, GO, NACE	L20BA3UTF9
Knife Gate	329	26 – 42	Class 150	RF	CS body, 316SS trim, Aflas,B16.47"B",GO, NACE	L20BA3UTFZ9
Globe	307	3/4 – 1-1/2	Class 800	SW	CS body, API #12 trim, BB, NACE	L21KA1DT9
Globe	309, 307	3/4 – 1-1/2	Class 800	THRD	CS body, API #12 trim, BELLOW SEAL,WB, NACE	L21KAOJTL9
Globe	309, 307	3/4 – 1-1/2	Class 800	SW	CS body, API #12 trim, BELLOW SEAL,WB, NACE	L21KA1JTL9
Globe	307	2 - 3	Class 150	RF	CS body, API #12 trim, BB, NACE	L21BA3DT9
Globe	307	4 - 8	Class 150	RF	CS body, API #12 trim, BB, GO, NACE	L21BA3DTB9
Check	61, 328	3/4 – 1-1/2	Class 800	SW	CS body, API #12 trim, Piston, BC, HORIZ.	L22KA1TTF9
Check	62, 328	2 – 24	Class 150	RF	CS body, API #12 trim, BC, Swing, NACE	L22BA3PT9
Ball	26, 101	2 – 12	Class 150	RF	CS, (A216-WCB) T7 MOD, RP, ORBIT, NACE	L25BB3FF9
Butterfly	101	2 – 24	Class 150	RF	CS body, 316 SS trim, Flg, Triple Offset GO, NACE	L26BA3TJM9
FLANGES	02, 104					
Socket Weld		3/4 – 1-1/2	Class 150	RF	CS, ASTM A105, ASME B16.5, 160	L40BA3BL
Socket Weld	12	3/4 – 1-1/2	Class 300	RF	CS, ASTM A105, ASME B16.5, 160	L40FA3BL
Blind		3/4 – 24	Class 150	RF	CS, ASTM A105, ASME B16.5	L43BA3
Blind Spectacle		3/4 – 18	Class 150	RF	CS, ASTM A516-70, ASME B16.48	L45BA3E
Spacer Ring		20 – 24	Class 150	RF	CS, ASTM A516-70, ASME B16.48	L45BA3F
Blind Plate		20 – 24	Class 150	RF	CS, ASTM A516-70, ASME B16.48	L45BA3G
Weld Neck		2 – 2	Class 150	RF	CS, ASTM A105, ASME B16.5, XS/80 Bore	L40BA3DN
Weld Neck	12	2 – 2	Class 300	RF	CS, ASTM A105, ASME B16.5, XS/80 Bore	L40FA3DN
Weld Neck		3 – 24	Class 150	RF	CS, ASTM A105, ASME B16.5, STD Bore	L40BA3DM
Weld Neck	12	3 – 24	Class 300	RF	CS, ASTM A105, ASME B16.5, STD Bore	L40FA3DM
Weld Neck	203	26 - 28	Class 150	RF	CS, ASTM A105, ASME B16.47"B", STD Bore	L48BA3DM
Weld Neck	203	30 - 42	Class 150	RF	CS, ASTM A105, ASME B16.47"B", XS Bore	L48BA3DN
Pair WN Orifice		1 – 1-1/2	Class 300	RF	CS, ASTM A105, ASME B16.36, NPS ½ SW taps, 160 Bore	L42FA3DLL
Pair WN Orifice		2 – 2	Class 300	RF	CS, ASTM A105, ASME B16.36, NPS ½ SW taps, 80/XS Bore	L42FA3DNL
Pair WN Orifice	17	3 – 18	Class 300	RF	CS, ASTM A105, ASME B16.36, NPS ½ SW taps, Std Bore	L42FA3DML
GASKETS						
		3/4 – 24	Class 150		Spiral wound type 316L SS w/ flexible Inhibited Graphite filler, ASME B16.20, w/inner ring	L61BF1CAC
	301	3/4 – 24	Class 150		KAM style, 316L SS w/APX-2 Graphite, EXH-SU-5151	L61BF1ZA
	12	3/4 – 24	Class 300		Spiral wound type 316L SS w/ flexible Inhibited Graphite filler, ASME B16.20, w/inner ring	L61FF1CAC
	12, 301	3/4 – 24	Class 300		KAM style, 316L SS w/APX-2 Graphite, EXH-SU-5151	L61FF1ZA
	203	28 - 42	Class 150		Spiral wound type 316L SS w/ flexible Inhibited Graphite filler, ASME B16.20, w/inner ring	L61BF1CAC
BOLTING						
Stud Bolts		3/4 – 42			ASTM A193, Gr B7 stud w/ 2 heavy hex nuts ASTM A194, Gr 2H	L620BM

CUSA-CSB-0019049
EPA

90° BRANCH CONNECTION, Legend and Chart

BRANCH	42	38	36	34	32	30	28	24	20	18	16	14	12	10	8	6	4	3	2	1-1/2	1	3/4
42	T																					
38	E	T																				
36	E	E	T																			
34	E	E	E	T																		
32	E	E	E	E	T																	
30	E	E	E	E	E	T																
28	E	E	E	E	E	E	T															
24	E	E	E	E	E	E	E	T														
20	E	E	E	E	E	E	E	E	T													
18	P	E	E	E	E	E	E	E	E	T												
16	P	P	E	E	E	E	E	E	E	E	T											
14	P	P	P	P	E	E	E	E	E	E	E	T										
12	P	P	P	P	P	E	E	E	E	E	E	E	T									
10	P	P	P	P	P	P	P	E	E	E	E	E	E	T								
8	W	W	W	W	W	W	W	W	E	E	E	E	E	E	T							
6	W	W	W	W	W	W	W	W	W	W	E	E	E	E	E	T						
4	W	W	W	W	W	W	W	W	W	W	W	W	W	E	E	E	T					
3	W	W	W	W	W	W	W	W	W	W	W	W	W	W	E	E	E	T				
2	W	W	W	W	W	W	W	W	W	W	W	W	W	W	W	W	E	E	T			
1-1/2	S	S	S	S	S	S	S	S	S	S	S	S	S	S	S	S	S	S	S	T		
1	S	S	S	S	S	S	S	S	S	S	S	S	S	S	S	S	S	S	S	E	T	
3/4	S	S	S	S	S	S	S	S	S	S	S	S	S	S	S	S	S	S	S	E	E	T
	42	38	36	34	32	30	28	24	20	18	16	14	12	10	8	6	4	3	2	1-1/2	1	3/4

HEADER SIZE

E Reducing Tee
P Branch Weld w/ Reinforcing Pad (Pad thickness equals run pipe thickness. Pad width equals 1/2 branch OD.)
T Equal Tee
S Sockolet
W Weldolet (Note 05)

NOTES:

03 THREADED JOINTS ARE PERMITTED ONLY AT OUTLET OF VENT AND DRAIN VALVES,AT HYDROSTATIC CONNECTIONS, AT OUTLET OF INSTRUMENT TAKE-OFF VALVES, AND TO MATCH EQUIP.
05 INTEGRALLY REINFORCED BRANCH CONNECTIONS ARE PERMITTED OUTSIDE THE SIZES SHOWN IN THE BRANCH CONNECTION TABLE. DESIGNER SHALL CHECK WELD THICKNESS OF INTEGRALLY REINFORCED BRANCH CONNECTIONS TO DETERMINE IF PWHT IS REQUIRED.
06 THESE VALVES SHALL BE USED ONLY FOR VENT, DRAIN, AND INSTRUMENT CONNECTIONS.
12 TO BE USED ONLY TO MATCH CLASS 300 RATED FLANGE CONNECTIONS AT CONTROL VALVES AND SPECIAL EQUIPMENT.
15 TO BE USED WHEN MATING TO FLANGED NOZZLES.
19 SCH 160 PIPE AND PIPE NIPPLES SHALL BE USED FOR THREADED CONNECTIONS FOR NPS 1/2 - 1-1/2.
26 TO BE USED ONLY WHEN INDICATED ON P&ID.
61 INSTALL IN HORIZONTAL POSITION WITH COVER UP.
62 INSTALL IN HORIZONTAL POSITION WITH COVER UP OR IN VERTICAL POSITION WITH UPWARD FLOW.
301 FOR USE IN VOC REGULATED SERVICES; IN FLANGES WITH SLIGHTLY DAMAGED GASKET SEATING FACES; OR IN FLANGES WITH A HISTORY OF LEAKING.
307 LIMITED TO THROTTLING SERVICES UP TO 150 PSI DIFFERENTIAL PRESSURE. FOR SERVICE APPLICATIONS WITH DIFFERENTIAL PRESSURES GREATER THAN 150 PSI, CONSULT WITH THE VALVE MANUFACTURER AND CHEVRON PIPING & VALVE SME FOR SUITABILITY.
325 USE FULL PORT VALVES IN LOCATIONS REQUIRING FULL OPENINGS SUCH AS UPSTREAM AND DOWNSTREAM OF RELIEF VALVES OR IN HORIZONTAL LINES CONTAINING HAZARDOUS LIQUIDS.
328 SIZING AND LOCATION OF CHECK VALVES IS CRITICAL FOR RELIABLE OPERATION. SEE SECTION 6.0 (25) IN THE GENERAL SPECIFICATION FOR MORE INFORMATION.
329 IN GENERAL, KNIFE GATE VALVES ARE TO BE RESTRICTED TO LARGE DIAMETER, LOW PRESSURE, LOW TEMPERATURE SERVICES SUCH AS RELIEF AND FLARE HEADERS.
17 USE WELD NECK FLANGE AND THROAT TAPS NPS 20" AND LARGER
91 USE RESTRICTED TO DRAINS, OPERATIONAL VENTS, AND INSTRUMENT ASSEMBLIES ONLY. THREADED NIPPLES TO BE SEAL WELDED. NIPPLE LENGTHS SHALL BE IN ACCORDANCE WITH STANDARD DRAWING GD-L-1057
92 USE RESTRICTED TO THERMOWELL ASSEMBLY ONLY
101 TO BE USED WHERE TIGHT SHUT-OFF IS REQUIRED.
104 USE CLASS 300 FLANGES WHEN MATING TO CONTROL VALVES AND EQUIPMENTS
309 USE BELLOW SEAL GATE VALVES FOR ALL IN-KIND PEPLACEMENT ONLY. INSTALL NEW BELLOW SEALVALVES WHEN REQUIRED BY PROJECT FOR PERMIT PURPOSES.
203 FLANGES AND GASKETS SHALL CONFORM TO ASME B16.47 SERIES B.

SERVICE:

- Hydrocarbon Gas, Vapor, Liquid w/ Moderate H2S (USE TO MATCH TO EXISTING PIPING; CLASS 300 RECOMMENDED FOR NEW SYSTEMS)
- Sour Process Gas (USE TO MATCH TO EXISTING PIPING; CLASS 300 RECOMMENDED FOR NEW SYSTEMS)
- Flare Gas w/ H2S
- Rich & Lean DEA (<100 °F)
- Sour Service (NACE) (USE TO MATCH TO EXISTING PIPING; CLASS 300 RECOMMENDED FOR NEW SYSTEMS)

CUSA-CSB-0019050
EPA

3CS11 replaces old AF1 Pipe class

		LIMITED BY:	Flanges
SERVICE:	Process	MATERIAL:	Carbon Steel
RATING CLASS:	300 RF, ASME B16.5-2009	DESIGN CODE:	ASME B31.3-2008
TEMPERATURE LIMIT:	Min. to 750F	STRESS RELIEF:	None
NOMINAL CORROSION ALLOWANCE:	0.063 in. (0.035 in. MIN for ¼")	EXAMINATION:	5% RT, PT & Visual
VALVE TRIM:	API Trim #8 (13CR & HF)		

PRESSURE - TEMPERATURE RATINGS			NOTE: HYDROTEST @ AMBIENT = 1125 psig					
TEMP F	Min. to 100	200	300	400	500	600	700	750
psig	740	680	655	635	605	570	530	505
TEMP C	Min. to 38	93	149	204	260	316	371	399
kPag	5100	4690	4515	4380	4170	3930	3655	3480

For NPS 3/4 through NPS 24 (Full flange ratings per ASME B16.5, Table 2-1.1.)

MINIMUM TEMPERATURE (see Note 300)		
SIZE:	¾" - 20"	24"
°F:	-20	+9
°C:	-29	-12

ITEM	NOTES	NPS	SCH/RAT	ENDS	DESCRIPTION	ITEM CODE
PIPE						
		3/4 – 1-1/2	XS/80	PE	CS, SMLS, ASTM A106-B	L11NA1B
		2 – 2	XS/80	BE	CS, SMLS, ASTM A106-B	L11NA2A
		3 – 12	STD	BE	CS, SMLS, ASTM A106-B	L11MA2A
		14 – 20	XS	BE	CS, SMLS, ASTM A106-B	L11NA2A
		24 – 24	40	BE	CS, SMLS, ASTM A106-B	L11EA2A
NIPPLES Branch						
Branch		3/4 – 1-1/2	160	PE	CS, SMLS , ASTM A106-B	L34LAEJ
Branch		3/4 – 1-1/2	160	TOE-POE	CS, SMLS , ASTM A106-B	L34LAHJ
Swage (CONC)		3/4 – 1-1/2	160	BBE	CS, ASTM A234-WPB-S, MSS SP-95	L55NA1VA
Swage (CONC)		3/4 – 1-1/2	160	BLE-TSE	CS, ASTM A234-WPB-S, MSS SP-95	L35LBMQ
FITTINGS						
Sockolet		3/4 – 1-1/2	Class 3000	SW	CS, ASTM A105, MSS SP-97	L36SBDT
Thredolet	03	3/4 – 1-1/2	Class 3000	THRD	CS, ASTM A105, MSS SP-97	L36SBAT
SW Elbolet		3/4 – 1-1/2	Class 3000	SW	CS, ASTM A105	L36SBDU
Latrolet	92	3/4 – 1-1/2	XS/80	Weld	CS, ASTM A105	L56NA1K
Weldolet	05	3/4 – 1-1/2	XS/80	Weld	CS, ASTM A105, MSS SP-97	L56NA1H
90 ELL		3/4 – 1-1/2	Class 3000	SW	CS, ASTM A105, ASME B16.11	L30SBDB
45 ELL		3/4 – 1-1/2	Class 3000	SW	CS, ASTM A105, ASME B16.11	L30SBDA
Tee		3/4 – 1-1/2	Class 3000	SW	CS, ASTM A105, ASME B16.11	L31SBD
Tee	03	3/4 – 1-1/2	Class 3000	THRD	CS, ASTM A105, ASME B16.11	L31SBA
Tee (RED)		3/4 – 1-1/2	Class 3000	SW	CS, ASTM A105, ASME B16.11	L31SBDD
Plug	03	3/4 – 1-1/2		THRD	CS, ASTM A105, round head, ASME B16.11	L370ABW
Plug		3/4 – 1-1/2		PE	CS, ASTM A105, round head, ASME B16.11	L370AEW
Coupling		3/4 – 1-1/2	Class 3000	SW	CS, ASTM A105, ASME B16.11	L34SBDH
Cap		3/4 – 1-1/2	Class 3000	SW	CS, ASTM A105, ASME B16.11	L37SBDX
Reducer (CONC)		2 – 2	XS/80	Weld	CS, ASTM A234-WPB-S, ASME B16.9	L55NA1DA
Reducer (ECC)		2 – 2	XS/80	Weld	CS, ASTM A234-WPB-S, ASME B16.9	L55NA1DB
Weldolet	05	2 – 2	XS/80	Weld	CS, ASTM A105, MSS SP-97	L56NA1H
90 LR ELL		2 – 2	XS/80	Weld	CS, ASTM A234-WPB-S, ASME B16.9	L50NA1BC
45 LR ELL		2 – 2	XS/80	Weld	CS, ASTM A234-WPB-S, ASME B16.9	L50NA1AC
Tee		2 – 2	XS/80	Weld	CS, ASTM A234-WPB-S, ASME B16.9	L51NA1
Tee (RED)	99	2 – 2	XS/80	Weld	CS, ASTM A234-WPB-S, ASME B16.9	L51NA1D
Cap		2 – 2	XS/80	Weld	CS, ASTM A234-WPB-S, ASME B16.9	L57NA1R
Reducer (CONC)		3 – 12	STD	Weld	CS, ASTM A234-WPB-S, ASME B16.9	L55MA1DA
Reducer (ECC)		3 – 12	STD	Weld	CS, ASTM A234-WPB-S, ASME B16.9	L55MA1DB
Weldolet	05	3 – 8	STD	Weld	CS, ASTM A105, MSS SP-97	L56MA1H
90 LR ELL		3 – 12	STD	Weld	CS, ASTM A234-WPB-S, ASME B16.9	L50MA1BC
45 LR ELL		3 – 12	STD	Weld	CS, ASTM A234-WPB-S, ASME B16.9	L50MA1AC
Tee		3 – 12	STD	Weld	CS, ASTM A234-WPB-S, ASME B16.9	L51MA1
Tee (RED)	99	3 – 12	STD	Weld	CS, ASTM A234-WPB-S, ASME B16.9	L51MA1D
Cap		3 – 12	STD	Weld	CS, ASTM A234-WPB-S, ASME B16.9	L57MA1R

CUSA-CSB-0019051
EPA

ITEM	NOTES	NPS	SCH/RAT	ENDS	DESCRIPTION	ITEM CODE
Reducer(CONC)		14 – 20	XS	Weld	CS, ASTM A234-WPB-S, ASME B16.9	L55NA1DA
Reducer (ECC)		14 – 20	XS	Weld	CS, ASTM A234-WPB-S, ASME B16.9	L55NA1DB
90 LR ELL		14 – 20	XS	Weld	CS, ASTM A234-WPB-S, ASME B16.9	L50NA1BC
45 LR ELL		14 – 20	XS	Weld	CS, ASTM A234-WPB-S, ASME B16.9	L50NA1AC
Tee		14 – 20	XS	Weld	CS, ASTM A234-WPB-S, ASME B16.9	L51NA1
Tee (RED)		14 – 20	XS	Weld	CS, ASTM A234-WPB-S, ASME B16.9	L51NA1D
Cap		14 – 20	XS	Weld	CS, ASTM A234-WPB-S, ASME B16.9	L57NA1R
Reducer (CONC)		24 – 24	40	Weld	CS, ASTM A234-WPB-S, ASME B16.9	L55EA1DA
Reducer (ECC)		24 – 24	40	Weld	CS, ASTM A234-WPB-S, ASME B16.9	L55EA1DB
90 LR ELL		24 – 24	40	Weld	CS, ASTM A234-WPB-S, ASME B16.9	L50EA1BC
45 LR ELL		24 – 24	40	Weld	CS, ASTM A234-WPB-S, ASME B16.9	L50EA1AC
Tee		24 – 24	40	Weld	CS, ASTM A234-WPB-S, ASME B16.9	L51EA1
Tee (RED)		24 – 24	40	Weld	CS, ASTM A234-WPB-S, ASME B16.9	L51EA1D
Cap		24 – 24	40	Weld	CS, ASTM A234-WPB-S, ASME B16.9	L57EA1R
VALVES						
Gate	67	1/2 – 1/2	Class 800	MSW/FSW	CS body, API #8 trim, BB, RP, EXTD body	L20KAXHDM
Gate	15	3/4 – 1-1/2	Class 300	RF	CS body, API #8 trim, BB, RP	L20FA3HD
Gate		3/4 – 1-1/2	Class 800	SW	CS body, API #8 trim, RP, BB	L20KA1HD
Gate	325	3/4 – 1-1/2	Class 800	SW	CS body, API #8 trim, FP, BB	L20KA1DD
Gate		3/4 – 1-1/2	Class 800	T/SW	CS body, API #8 trim, RP, BB	L20KA7HD
Gate	94	3/4 – 1-1/2	Class 800	MSW/FNPT	CS body, API #8 trim, BB, RP, EXTD body	L20KAYHDM
Gate	06, 161	3/4 – 1-1/2	Class 800	SW	CS body, API #8 trim, RP, BELLOW SEAL, WB	L20KD1MDL
Gate	06, 161,325	3/4 – 1-1/2	Class 800	SW	CS body, API #8 trim, FP, BELLOW SEAL, WB	L20KD1FDL
Gate	06, 161	3/4 – 1-1/2	Class 800	T/SW	CS body, API #8 trim, RP, BELLOW SEAL, WB	L20KD7MDL
Gate		2 – 6	Class 300	RF	CS body, API #8 trim, BB, FP	L20FA3DD
Gate		8 – 24	Class 300	RF	CS body, API #8 trim, BB, FP, GO	L20FA3DDF
Globe	161, 307	3/4 – 1-1/2	Class 800	T/SW	CS body, API #8 trim, BELLOW SEAL, WB	L21KD7JEL
Globe	161, 307	3/4 – 1-1/2	Class 800	SW	CS body, API #8 trim, BELLOW SEAL, WB	L21KD1JEL
Globe	307	3/4 – 1-1/2	Class 800	SW	CS body, API #8 trim, BB	L21KA1DE
Globe	307	2 – 2	Class 300	RF	CS body, API #8 trim, BB	L21FA3DE
Globe	307	3 – 8	Class 300	RF	CS body, API #8 trim, BB, GO	L21FA3DEB
Check	61, 328	3/4 – 1-1/2	Class 800	SW	CS body, API #8 trim, BC, Piston, HORIZ	L22KA1TEF
Check	62, 328	2 – 24	Class 300	RF	CS body, API #8 trim, BC, Swing	L22FA3PE
Check	62,328	2 – 24	Class 300	RF	CS body, API #8 trim, Dual Plate	L22FA3LEH
Ball	26, 101	2 – 12	Class 300	RF	CS, (A216-WCB) T3 MOD, RP, ORBIT	L25FB3FB
Ball	101, 327	2 – 4	Class 300	RF	CS body, 316 SS trim, RP, TFE seat, FS	L25FA3CE
Ball	101, 327	6 – 24	Class 300	RF	CS body, 316 SS trim, RP, TFE seat, FS, GO	L25FA3CEM
Butterfly	101	2 – 24	Class 300	RF	CS body, 316 SS trim, Flg, Triple Offset GO	L26FA3TJM
FLANGES	02, 13					
Socket Weld		3/4 – 1-1/2	Class 300	RF	CS, ASTM A105, ASME B16.5, XS Bore	L40FA3BN
Blind		3/4 – 24	Class 300	RF	CS, ASTM A105, ASME B16.5	L43FA3
Blind Spectacle		3/4 – 14	Class 300	RF	CS, ASTM A516-70, ASME B16.48	L45FA3E
Spacer Ring		16 – 24	Class 300	RF	CS, ASTM A516-70, ASME B16.48	L45FA3F
Blind Plate		16 – 24	Class 300	RF	CS, ASTM A516-70, ASME B16.48	L45FA3G
Weld Neck		2 – 2	Class 300	RF	CS, ASTM A105, ASME B16.5, XS/80 Bore	L40FA3DN
Weld Neck		3 – 12	Class 300	RF	CS, ASTM A105, ASME B16.5, STD Bore	L40FA3DM
Weld Neck		14 – 20	Class 300	RF	CS, ASTM A105, ASME B16.5, XS Bore	L40FA3DN
Weld Neck		24 – 24	Class 300	RF	CS, ASTM A105, ASME B16.5, 40 Bore	L40FA3DE
Pair WN Orifice		1 – 2	Class 300	RF	CS, ASTM A105, ASME B16.36, ½ SW taps, XS/80 Bore	L42FA3DNL
Pair WN Orifice		3 – 12	Class 300	RF	CS, ASTM A105, ASME B16.36, 1/2 SW taps, STD bore	L42FA3DML
Pair WN Orifice	17	14 – 18	Class 300	RF	CS, ASTM A105, ASME B16.36, ½ SW taps, XS Bore	L42FA3DNL
GASKETS		3/4 – 24	Class 300	RF	Spiral wound type 316L SS w/ flexible Inhibited Graphite filler, ASME B16.20, w/inner ring.	L61FF1GAC
	301	3/4 – 24	Class 300		KAM style, 316LSS w/APX-2 Graphite, EXH-SU-5151	L61FF1ZA
BOLTING						
Stud Bolts	310	3/4 – 24			ASTM A193, Gr B7 stud w/ 2 heavy hex nuts ASTM A194,Gr 2H	L620BM
Stud Bolts	311	3/4 – 24			ASTM A193, Gr B16 stud w/ 2 heavy hex nuts ASTM A194,Gr 7	L620CM

90° BRANCH CONNECTION, Legend and Chart

BRANCH \ HEADER SIZE	24	20	18	16	14	12	10	8	6	4	3	2	1-1/2	1	3/4	1/2
24	T															
20	E	T														
18	E	E	T													
16	E	E	E	T												
14	E	E	E	E	T											
12	E	E	E	E	E	T										
10	E	E	E	E	E	E	T									
8	W	E	E	E	E	E	E	T								
6	W	W	W	E	E	E	E	E	T							
4	W	W	W	W	W	W	E	E	E	T						
3	W	W	W	W	W	W	W	E	E	E	T					
2	W	W	W	W	W	W	W	W	W	E	E	T				
1-1/2	S	S	S	S	S	S	S	S	S	S	S	S	T			
1	S	S	S	S	S	S	S	S	S	S	S	S	E	T		
3/4	S	S	S	S	S	S	S	S	S	S	S	S	E	E	T	
1/2	S	S	S	S	S	S	S	S	S	S	S	S	E	E	E	T

E Reducing Tee
P Branch Weld w/ Reinforcing Pad (Pad thickness equals run pipe thickness. Pad width equals 1/2 branch OD.)
T Equal Tee
S Sockolet
W Weldolet (Note 05)

NOTES:

03 THREADED JOINTS ARE PERMITTED ONLY AT OUTLET OF VENT AND DRAIN VALVES, AT HYDROSTATIC CONNECTIONS, AT OUTLET OF INSTRUMENT TAKE-OFF VALVES, AND TO MATCH EQUIPMENT.
05 INTEGRALLY REINFORCED BRANCH CONNECTIONS ARE PERMITTED OUTSIDE THE SIZES SHOWN IN THE BRANCH CONNECTION TABLE. DESIGNER SHALL CHECK WELD THICKNESS OF INTEGRALLY REINFORCED CONNECTIONS TO DETERMINE IF PWHT IS REQUIRED.
06 THESE VALVES SHALL BE USED FOR VENT, DRAIN AND INSTRUMENT CONNECTIONS ONLY.
15 TO BE USED WHEN MATING TO FLANGED NOZZLES.
26 TO BE USED ONLY WHEN INDICATED ON THE P&ID.
61 INSTALL IN HORIZONTAL POSITION WITH COVER UP.
62 INSTALL IN HORIZONTAL POSITION WITH COVER UP OR IN VERTICAL POSITION WITH UPWARD FLOW.
300 FOR PIPING SYSTEM MAWP LOWER THAN PIPE CLASS MAX. PRESSURE, SEE FIG. 323.2.2B IN ASME B31.3 FOR REDUCTION IN MINIMUM DESIGN METAL TEMPERATURE.
301 FOR USE IN VOC REGULATED SERVICES; IN FLANGES WITH SLIGHTLY DAMAGED GASKET SEATING FACES; OR IN FLANGES WITH A HISTORY OF LEAKING.
307 LIMITED TO THROTTLING SERVICES UP TO 150 PSI DIFFERENTIAL PRESSURE. FOR SERVICE APPLICATIONS WITH DIFFERENTIAL PRESSURES GREATER THAN 150 PSI, CONSULT WITH THE VALVE MANUFACTURER AND CHEVRON PIPING & VALVE SME FOR SUITABILITY.
310 ASME A193/SA193 GR. B7 STUD BOLTING IS LIMITED TO PROCESS SERVICE TEMPERATURES NOT GREATER THAN 700°F TO AVOID THERMAL FATIGUE CRACKING.
311 ASME A193/SA193 GR. B16 STUD BOLTING SHOULD BE USED IN ALL PROCESS SERVICES WITH TEMPERATURES GREATER THAN 700°F. FLANGES SHOULD NOT BE INSULATED AT PROCESS SERVICE TEMPERATURES ABOVE 850°F TO AVOID THERMAL FATIGUE CRACKING. AT TEMPERATURES GREATER THAN 850°F, WEATHER SHIELDS OVER FLANGES ARE ACCEPTABLE.
325 USE FULL PORT VALVES IN LOCATIONS REQUIRING FULL OPENINGS SUCH AS UPSTREAM AND DOWNSTREAM OF RELIEF VALVES OR IN HORIZONTAL LINES CONTAINING HAZARDOUS LIQUIDS.
327 LIMITED TO PROCESS TEMPERATURES UP TO 250°F (121°C)
328 SIZING AND LOCATION OF CHECK VALVES IS CRITICAL FOR RELIABLE OPERATION. SEE SECTION 6.0 (25) IN THE GENERAL SPECIFICATION FOR MORE INFORMATION.
17 USE WELD NECK FLANGES AND THROAT TAPS NPS 20" AND LARGER.
67 USE RESTRICTED TO ORIFICE FLANGE TAP CONNECTIONS. THREADED NIPPLES TO BE SEAL WELDED. NIPPLE LENGTHS SHALL BE IN ACCORDANCE WITH STANDARD DRAWING D-601407.
92 USE RESTRICTEDTO THERMOWELL ASSEMBLY.
94 USE RESTRICTED TO DRAINS, OPERATIONAL VENTS, AND INSTRUMENT CONNECTIONS.
101 TO BE USED WHERE TIGHT SHUT-OFF IS REQUIRED.
104 ORBIT VALVES WITH TYPE "H" SEATS ARE LIMITED TO 500 F.
161 USE BELLOW SEAL GATE VALVES FOR ALL IN-KIND PEPLACEMENT ONLY. INSTALL NEW BELLOW SEAL VALVES WHEN REQUIRED BY PROJECT FOR PERMIT PURPOSES.

SERVICES:

- Hydrocarbon Liquid, Gas and Vapor
- Hydrocarbon Liquid, Gas and Vapor w/ Trace H2S
- LPG and LPG/HC
- LPG and LPG/HC w/ Trace H2S
- Fuel Gas, Fuel Oil, Natural Gas
- Hydrogen (to 450°F Maximum)
- Aqueous Ammonia
- Nitrogen, Process Air, and Process Water

CUSA-CSB-0019053
EPA

		LIMITED BY:	Flanges
SERVICE:	Steam/Condensate (Non Boiler Code)	MATERIAL:	Carbon Steel
RATING CLASS:	300 RF, ASME B16.5-2009	DESIGN CODE:	ASME B31.3-2008
TEMPERATURE LIMIT:	Min. to 750F	STRESS RELIEF:	NONE
NOMINAL CORROSION ALLOWANCE:	0.063 in. (0.035 in. MIN for ¾")	EXAMINATION:	5% RT, PT & Visual
VALVE TRIM:	API Trim #5 (13CR & FHF)		

PRESSURE - TEMPERATURE RATINGS				NOTE: HYDROTEST @ AMBIENT = 1125 psig				
TEMP F	Min. to 100	200	300	400	500	600	700	750
psig	740	675	655	635	600	550	535	505
TEMP C	Min. to 38	93	149	204	260	316	371	399
kPag	5105	4655	4520	4380	4140	3795	3690	3485

For NPS 3/4 through NPS 24 (Full flange ratings per ASME B16.5, Table 2-1.1.)

MINIMUM TEMPERATURE (see Note 300)			
SIZE:	¾" - 18"	20"	24"
°F:	-20	-2	+9
°C:	-29	-19	-12

ITEM	NOTES	NPS	SCH/RAT	ENDS	DESCRIPTION	ITEM CODE
PIPE						
		3/4 – 1-1/2	XS/80	PE	CS, SMLS, ASTM A106-B	L11NA1B
		2 – 2	XS/80	BE	CS, SMLS, ASTM A106-B	L11NA2A
		3 – 12	STD	BE	CS, SMLS, ASTM A106-B	L11MA2A
		14 – 18	XS	BE	CS, SMLS, ASTM A106-B	L11NA2A
		20 – 24	40	BE	CS, SMLS, ASTM A106-B	L11EC2J
NIPPLES						
Branch		3/4 – 1-1/2	XS/80	PE	CS, SMLS , ASTM A106-B	L34NAEJ
Branch		3/4 – 1-1/2	160	TOE-POE	CS, SMLS , ASTM A106-B	L34LAHJ
Swage (CONC)		3/4 – 1-1/2	160	BBE	CS, ASTM A234-WPB-S, MSS SP-95	L55NA1VA
Swage (CONC)		3/4 – 1-1/2	160	BLE-TSE	CS, ASTM A234-WPB-S, MSS SP-95	L35LBMQ
FITTINGS						
Sockolet		3/4 – 1-1/2	Class 3000	SW	CS, ASTM A105, MSS SP-97	L36SBDT
Thredolet	03	3/4 – 1-1/2	Class 3000	THRD	CS, ASTM A105, MSS SP-97	L36SBAT
SW Elbolet		1 – 1-1/2	Class 3000	SW	CS, ASTM A105	L36SBDU
Latrolet	92	1 – 1-1/2	XS/80	Weld	CS, ASTM A105	L56NA1K
Weldolet	05	1 – 1-1/2	XS/80	Weld	CS, ASTM A105, MSS SP-97	L56NA1H
90 ELL		3/4 – 1-1/2	Class 3000	SW	CS, ASTM A105, ASME B16.11	L30SBDB
45 ELL		3/4 – 1-1/2	Class 3000	SW	CS, ASTM A105, ASME B16.11	L30SBDA
Tee		3/4 – 1-1/2	Class 3000	SW	CS, ASTM A105, ASME B16.11	L31SBD
Tee	03	3/4 – 1-1/2	Class 3000	THRD	CS, ASTM A105, ASME B16.11	L30SBDB
Tee (RED)	99	3/4 – 1-1/2	Class 3000	SW	CS, ASTM A105, ASME B16.11	L31SBDD
Plug	03	3/4 – 1-1/2		THRD	CS, ASTM A105, round head, ASME B16.11	L370ABW
Plug		3/4 – 1-1/2		PE	CS, ASTM A105, round head, ASME B16.11	L370AEW
Coupling		3/4 – 1-1/2	Class 3000	SW	CS, ASTM A105, ASME B16.11	L34SBDH
Cap		1 – 1-1/2	Class 3000	SW	CS, ASTM A105, ASME B16.11	L37SBDX
Reducer (CONC)		2 – 2	XS/80	Weld	CS, ASTM A234-WPB-W, ASME B16.9	L55NA1DA
Reducer (ECC)		2 – 2	XS/80	Weld	CS, ASTM A234-WPB-W, ASME B16.9	L55NA1DB
Weldolet	05	2 – 2	XS/80	Weld	CS, ASTM A105, MSS SP-97	L56NA1H
90 LR ELL		2 – 2	XS/80	Weld	CS, ASTM A234-WPB-W, ASME B16.9	L50NA1BC
45 LR ELL		2 – 2	XS/80	Weld	CS, ASTM A234-WPB-W, ASME B16.9	L50NA1AC
Tee		2 – 2	XS/80	Weld	CS, ASTM A234-WPB-W, ASME B16.9	L51NA1
Tee (RED)	99	2 – 2	XS/80	Weld	CS, ASTM A234-WPB-W, ASME B16.9	L51NA1D
Cap		2 – 2	XS/80	Weld	CS, ASTM A234-WPB-S, ASME B16.9	L57NA1R
Reducer (CONC)		3 – 12	STD	Weld	CS, ASTM A234-WPB-W, ASME B16.9	L55MA1DA
Reducer (ECC)		3 – 12	STD	Weld	CS, ASTM A234-WPB-W, ASME B16.9	L55MA1DB
Weldolet	05	3 – 8	STD	Weld	CS, ASTM A105, MSS SP-97	L56MA1H
90 LR ELL		3 – 12	STD	Weld	CS, ASTM A234-WPB-W, ASME B16.9	L50MA1BC
45 LR ELL		3 – 12	STD	Weld	CS, ASTM A234-WPB-W, ASME B16.9	L50MA1AC
Tee		3 – 12	STD	Weld	CS, ASTM A234-WPB-W, ASME B16.9	L51MA1
Tee (RED)	99	3 – 12	STD	Weld	CS, ASTM A234-WPB-W, ASME B16.9	L51MA1D

ITEM	NOTES	NPS	SCH/RAT	ENDS	DESCRIPTION	ITEM CODE
Cap		3 – 12	STD	Weld	CS, ASTM A234-WPB-S, ASME B16.9	L57MA1R
Reducer (CONC)		14 – 18	XS	Weld	CS, ASTM A234-WPB-W, ASME B16.9	L55NS1DA
Reducer (ECC)		14 – 18	XS	Weld	CS, ASTM A234-WPB-W, ASME B16.9	L55NS1DB
90 LR ELL		14 – 18	XS	Weld	CS, ASTM A234-WPB-W, ASME B16.9	L50NA1BC
45 LR ELL		14 – 18	XS	Weld	CS, ASTM A234-WPB-W, ASME B16.9	L50NA1AC
Tee		14 – 18	XS	Weld	CS, ASTM A234-WPB-W, ASME B16.9	L51NA1
Tee (RED)		14 – 18	XS	Weld	CS, ASTM A234-WPB-W, ASME B16.9	L51NA1D
Cap		14 – 18	XS	Weld	CS, ASTM A234-WPB-S, ASME B16.9	L57NA1R
Reducer (CONC)		20 – 24	40	Weld	CS, ASTM A234-WPB-W, ASME B16.9	L55EA1DA
Reducer (ECC)		20 – 24	40	Weld	CS, ASTM A234-WPB-W, ASME B16.9	L55EA1DB
90 LR ELL		20 – 24	40	Weld	CS, ASTM A234-WPB-W, ASME B16.9	L50EA1BC
45 LR ELL		20 – 24	40	Weld	CS, ASTM A234-WPB-W, ASME B16.9	L50EA1AC
Tee		20 – 24	40	Weld	CS, ASTM A234-WPB-W, ASME B16.9	L51EA1
Tee (RED)		20 – 24	40	Weld	CS, ASTM A234-WPB-W, ASME B16.9	L51EA1D
Cap		20 – 24	40	Weld	CS, ASTM A234-WPB-S, ASME B16.9	L57EA1R
VALVES						
Gate	15	3/4 – 1-1/2	Class 300	RF	CS body w/ #5 trim, RP, BB	L20FA3HF
Gate		3/4 – 1-1/2	Class 800	SW	CS body w/ #5 trim, RP, WB	L20KA1MF
Gate	325	3/4 – 1-1/2	Class 800	SW	CS body w/ #5 trim, FP, WB	L20KA1FF
Gate	06	3/4 – 1-1/2	Class 800	T/SW	CS body w/ #5 trim, RP, WB	L20KA7MF
Gate		2 – 6	Class 300	RF	CS body w/ #5 trim, FP, BB	L20FA3DF
Gate		8 – 24	Class 300	RF	CS body w/ #5 trim, FP, BB, GO	L20FA3DFF
Globe	307	3/4 – 1-1/2	Class 800	SW	CS body w/ #5 trim, WB	L21KA1JG
Globe	307	2 – 2	Class 300	RF	CS body w/ #5 trim, BB	L21BA3DG
Globe	307	3 – 8	Class 300	RF	CS body w/ #5 trim, BB, GO	L21BA3DGB
Angle		3/4 – 1-1/2	Class 600	SW	CS body w/ #5 trim, RP, WB	L23JA1JG
Check	61, 328	3/4 – 1-1/2	Class 800	SW	CS body w/ #5 trim, HF, BC, Piston, HORIZ.	L22KA1TGF
Check	62, 328	2 – 24	Class 300	RF	CS body w/ #5 trim, HF, BC, Swing	L22FA3PG
FLANGES	02					
Socket Weld		3/4 – 1-1/2	Class 300	RF	CS, ASTM A105, ASME B16.5, XS/80 Bore	L40FA3BN
Blind		3/4 – 24	Class 300	RF	CS, ASTM A105, ASME B16.5	L43FA3
Blind Spectacle		3/4 – 14	Class 300	RF	CS, ASTM A516-70, ASME B16.48	L45FA3E
Spacer Ring		16 – 24	Class 300	RF	CS, ASTM A516-70, ASME B16.48	L45FA3F
Blind Plate		16 – 24	Class 300	RF	CS, ASTM A516-70, ASME B16.48	L45FA3G
Weld Neck		2 – 2	Class 300	RF	CS, ASTM A105, ASME B16.5, XS/80 Bore	L40FA3DN
Weld Neck		3 – 12	Class 300	RF	CS, ASTM A105, ASME B16.5, Std Bore	L40FA3DM
Weld Neck		14 – 18	Class 300	RF	CS, ASTM A105, ASME B16.5, XS Bore	L40FA3DN
Weld Neck		20 – 24	Class 300	RF	CS, ASTM A105, ASME B16.5, 40 Bore	L40FA3DE
Pair WN Orifice		2 – 2	Class 300	RF	CS, ASTM A105, ASME B16.36, ½ SW taps, XS/80	L42FA3DNL
Pair WN Orifice		3 – 12	Class 300	RF	CS, ASTM A105, ASME B16.36, ½ SW taps, Std Bore	L42FA3DML
Pair WN Orifice		14 – 18	Class 300	RF	CS, ASTM A105, ASME B16.36, ½ SW taps, XS Bore	L42FA3DNL
Pair WN Orifice	17	20 – 24	Class 300	RF	CS, ASTM A105, ASME B16.36, ½ SW taps, 40 Bore	L42FA3DEL
GASKETS						
		3/4 – 24	Class 300		Spiral wound type 316L SS w/ flexible Inhibited Graphite filler, ASME B16.20, w/inner ring.	L61FF1CAC
	301	3/4 – 24	Class 300		KAM style, 316LSS w/APX-2 Graphite, EXH-SU-5151	L61FF1ZA
BOLTING						
Stud Bolts	310	3/4 – 24			ASTM A193, B7 stud w/ 2 heavy hex nuts ASTM A194, GR 2H	L620BM
Stud Bolts	311	3/4 – 24			ASTM A193, Gr B16 stud w/ 2 heavy hex nuts ASTM A194, Gr 7	L620CM

90° BRANCH CONNECTION, Legend and Chart

BRANCH \ HEADER SIZE	24	20	18	16	14	12	10	8	6	4	3	2	1-1/2	1	3/4	1/2
24	T															
20	E	T														
18	E	E	T													
16	E	E	E	T												
14	E	E	E	E	T											
12	E	E	E	E	E	T										
10	E	E	E	E	E	E	T									
8	W	E	E	E	E	E	E	T								
6	W	W	W	E	E	E	E	E	T							
4	W	W	W	W	W	W	E	E	E	T						
3	W	W	W	W	W	W	W	E	E	E	T					
2	W	W	W	W	W	W	W	W	W	E	E	T				
1-1/2	S	S	S	S	S	S	S	S	S	S	S	S	T			
1	S	S	S	S	S	S	S	S	S	S	S	S	E	T		
3/4	S	S	S	S	S	S	S	S	S	S	S	S	E	E	T	
1/2	S	S	S	S	S	S	S	S	S	S	S	S	E	E	E	T

E Reducing Tee
P Branch Weld w/ Reinforcing Pad (Pad thickness equals run pipe thickness. Pad width equals 1/2 branch OD.)
T Equal Tee
S Sockolet
W Weldolet (Note 05)

NOTES:

01 WHERE PIPE SCHEDULE IS SHOWN UNDER "SCH/RAT," IT IS ADEQUATE FOR THE FULL FLANGE RATING. WHERE "CALC" IS SHOWN, THE PRESSURE LIMIT MAY BE LOWER THAN FLANGE RATING.
02 ALL BUTT-WELDED COMPONENT THICKNESSES SHALL MATCH PIPE THICKNESS.
03 THREADED JOINTS ARE PERMITTED ONLY AT OUTLET OF VENT AND DRAIN VALVES, AT HYDROSTATIC CONNECTIONS, AT OUTLET OF INSTRUMENT TAKE-OFF VALVES, AND TO MATCH EQUIPMENT.
05 INTEGRALLY REINFORCED BRANCH CONNECTIONS ARE PERMITTED OUTSIDE THE SIZES SHOWN IN THE BRANCH CONNECTION TABLE. DESIGNER SHALL CHECK WELD THICKNESS OF INTEGRALLY REINFORCED BRANCH CONNECTIONS TO DETERMINE IF PWHT IS REQUIRED.
06 THESE VALVES SHALL BE USED ONLY FOR VENT, DRAIN, AND INSTRUMENT CONNECTIONS.
15 TO BE USED WHEN MATING TO FLANGED NOZZLES
19 SCH 160 PIPE AND PIPE NIPPLES SHALL BE USED FOR THREADED CONNECTIONS FOR NPS 1/2 - 1-1/2
59 USE BRANCH WELD WITH REINFORCEMENT PAD WHEN THE MINIMUM HEADER WALL THICKNESS (SPECIFIED OR MEASURED) AT THE BRANCH LOCATION EXCEEDS XXX, WHERE XXX EQUALS THE WALL THICKNESS VALUE FOR THE LETTER SYMBOL SHOWN IN THE LEGEND. USE FULL ENCIRCLEMENT (LENGTH EQUALS TWICE BRANCH PIPE OD) WHEN THE WALL IS LESS THAN OR EQUAL TO XXX.
61 INSTALL IN HORIZONTAL POSITION WITH COVER UP.
62 INSTALL IN HORIZONTAL POSITION WITH COVER UP OR IN VERTICAL POSITION WITH UPWARD FLOW.
136 SCH XS PIPE SHALL BE USED FOR THREADED CONNECTIONS FOR SIZE NPS 2.
300 FOR PIPING SYSTEM MAWP LOWER THAN PIPE CLASS MAX. PRESSURE, SEE FIG. 323.2.2B IN ASME B31.3 FOR REDUCTION IN MINIMUM DESIGN METAL TEMPERATURE.
301 FOR USE IN VOC REGULATED SERVICES; IN FLANGES WITH SLIGHTLY DAMAGED GASKET SEATING FACES; OR IN FLANGES WITH A HISTORY OF LEAKING.
307 LIMITED TO THROTTLING SERVICES UP TO 150 PSI DIFFERENTIAL PRESSURE. FOR SERVICE APPLICATIONS WITH DIFFERENTIAL PRESSURES GREATER THAN 150 PSI, CONSULT WITH THE VALVE MANUFACTURER AND CHEVRON PIPING & VALVE SME FOR SUITABILITY.
310 ASME A193/SA193 GR. B7 STUD BOLTING IS LIMITED TO PROCESS SERVICE TEMPERATURES NOT GREATER THAN 700°F TO AVOID THERMAL FATIGUE CRACKING.
311 ASME A193/SA193 GR. B16 STUD BOLTING SHOULD BE USED IN ALL PROCESS SERVICES WITH TEMPERATURES GREATER THAN 700°F. FLANGES SHOULD NOT BE INSULATED AT PROCESS SERVICE TEMPERATURES ABOVE 850°F TO AVOID THERMAL FATIGUE CRACKING. AT TEMPERATURES GREATER THAN 850°F, WEATHER SHIELDS OVER FLANGES ARE ACCEPTABLE.
325 USE FULL PORT VALVES IN LOCATIONS REQUIRING FULL OPENINGS SUCH AS UPSTREAM AND DOWNSTREAM OF RELIEF VALVES OR IN HORIZONTAL LINES CONTAINING HAZARDOUS LIQUIDS.
328 SIZING AND LOCATION OF CHECK VALVES IS CRITICAL FOR RELIABLE OPERATION. SEE SECTION 6.0 (25) IN THE GENERAL SPECIFICATION FOR MORE INFORMATION.
17 USE WELD NECK FLANGES AND THROAT TAPS NPS 20" AND LARGER
92 USE RESTRICTEDTO THERMOWELL ASSEMBLY

SERVICE:

- STEAM COND.
- BOILER FEEDWATER (ASME B31.3)
- SUPER HEATED STEAM (ASME B31.3)

SERVICE:	Process	LIMITED BY:	Flanges
RATING CLASS:	300 RF, ASME B16.5-2009	MATERIAL:	Carbon Steel
TEMPERATURE LIMIT:	Min. to 750F	DESIGN CODE:	ASME B31.3-2008
NOMINAL CORROSION ALLOWANCE:	0.125 in. (0.100 in. MIN)	STRESS RELIEF:	NONE
VALVE TRIM:	API Trim #8 (13CR & HF)	EXAMINATION:	5% RT, PT & Visual

*LIMITATIONS: Pressure limits for steels in hydrogen service. See Note 302.

PRESSURE - TEMPERATURE RATINGS			NOTE: HYDROTEST @ AMBIENT = 1125 psig					
TEMP F	Min. to 100	200	300	400	500	600	700	750
psig	740	675	655	635	600 (280)*	550 (65)*	535 (50)*	505 (50)*
TEMP C	Min. to 38	93	149	204	260	316	371	399
kPag	5100	4655	4515	4380	4135	3795	3690	3480

For NPS 3/4 through NPS 24 (Full flange ratings per ASME B16.5, Table 2-1.1.)

MINIMUM TEMPERATURE (see Note 300)				
SIZE:	¾" - 16"	18"	20"	24"
°F:	-20	-7	-2	+9
°C:	-29	-21	-19	-12

ITEM	NOTES	NPS	SCH/RAT	ENDS	DESCRIPTION	ITEM CODE
PIPE	20					
		3/4 – 1-1/2	160	PE	CS, SMLS, ASTM A106-B	L11LA1B
		2 – 3	XS	BE	CS, SMLS, ASTM A106-B	L11NA2A
		4 – 10	STD WT	BE	CS, SMLS, ASTM A106-B	L11MA2A
		12 – 24	40	BE	CS, SMLS, ASTM A106-B	L11EA2A
NIPPLES	03, 20					
Branch		3/4 – 1-1/2	160	PE	CS, SMLS, ASTM A106-B	L34LAEJ
Branch		3/4 – 1-1/2	XXS	TOE-POE	CS, SMLS, ASTM A106-B	L34PAHJ
Swage (CONC)		3/4 – 1-1/2	160	BBE	CS, ASTM A234-WPB-S, MSS SP-95	L55LA1VA
Swage (CONC)		3/4 – 1-1/2	XXS	BLE-TSE	CS, ASTM A234-WPB-S, MSS SP-95	L35PBMQ
FITTINGS						
Sockolet		3/4 – 1-1/2	Class 6000	SW	CS, ASTM A105, MSS SP-97	L36VBDT
Thredolet	03	3/4 – 1-1/2	Class 6000	THRD	CS, ASTM A105, MSS SP-97	L36VBAT
SW Elbolet		3/4 – 1-1/2	Class 6000	SW	CS, ASTM A105	L36VBDU
Latrolet	92	3/4 – 1-1/2	160	Weld	CS, ASTM A105	L56LA1K
Weldolet	05	3/4 – 1-1/2	160	Weld	CS, ASTM A105, MSS SP-97	L56LA1H
90 ELL		3/4 – 1-1/2	Class 6000	SW	CS, ASTM A105, ASME B16.11	L30VBDB
45 ELL		3/4 – 1-1/2	Class 6000	SW	CS, ASTM A105, ASME B16.11	L30VBDA
Tee		3/4 – 1-1/2	Class 6000	SW	CS, ASTM A105, ASME B16.11	L31VBD
Tee	03	3/4 – 1-1/2	Class 6000	THRD	CS, ASTM A105, ASME B16.11	L31VBA
Tee (RED)		3/4 – 1-1/2	Class 6000	SW	CS, ASTM A105, ASME B16.11	L31VBDD
Plug	03	3/4 – 1-1/2		THRD	CS, ASTM A105, round head, ASME B16.11	L370ABW
Plug		3/4 – 1-1/2		PE	CS, ASTM A105, round head, ASME B16.11	L370AEW
Coupling		3/4 – 1-1/2	Class 6000	SW	CS, ASTM A105, ASME B16.11	L34VBDH
Cap		3/4 – 1-1/2	Class 6000	SW	CS, ASTM A105, ASME B16.11	L37VBDX
Reducer (CONC)		2 – 3	XS	Weld	CS, ASTM A234-WPB-S, ASME B16.9	L55NA1DA
Reducer (ECC)		2 – 3	XS	Weld	CS, ASTM A234-WPB-S, ASME B16.9	L55NA1DB
Weldolet	05	2 – 3	XS	Weld	CS, ASTM A105, MSS SP-97	L56NA1H
90 LR ELL		2 – 3	XS	Weld	CS, ASTM A234-WPB-S, ASME B16.9	L50NA1BC
45 LR ELL		2 – 3	XS	Weld	CS, ASTM A234-WPB-S, ASME B16.9	L50NA1AC
Tee		2 – 3	XS	Weld	CS, ASTM A234-WPB-S, ASME B16.9	L51NA1
Tee (RED)		2 – 3	XS	Weld	CS, ASTM A234-WPB-S, ASME B16.9	L51NA1D
Cap		2 – 3	XS	Weld	CS, ASTM A234-WPB-S, ASME B16.9	L57NA1R
Reducer (CONC)		4 – 10	STD WT	Weld	CS, ASTM A234-WPB-S, ASME B16.9	L55MA1DA
Reducer (ECC)		4 – 10	STD WT	Weld	CS, ASTM A234-WPB-S, ASME B16.9	L55MA1DB
Weldolet	05	4 – 8	STD WT	Weld	CS, ASTM A105, MSS SP-97	L56MA1H
90 LR ELL		4 – 10	STD WT	Weld	CS, ASTM A234-WPB-S, ASME B16.9	L50MA1BC
45 LR ELL		4 – 10	STD WT	Weld	CS, ASTM A234-WPB-S, ASME B16.9	L50MA1AC
Tee		4 – 10	STD WT	Weld	CS, ASTM A234-WPB-S, ASME B16.9	L51MA1
Tee (RED)		4 – 10	STD WT	Weld	CS, ASTM A234-WPB-S, ASME B16.9	L51MA1D

ITEM	NOTES	NPS	SCH/RAT	ENDS	DESCRIPTION	ITEM CODE
Cap		4 – 10	STD WT	Weld	CS, ASTM A234-WPB-S, ASME B16.9	L57MA1R
Reducer (CONC)		12 – 24	40	Weld	CS, ASTM A234-WPB-S, ASME B16.9	L55EA1DA
Reducer (ECC)		12 – 24	40	Weld	CS, ASTM A234-WPB-S, ASME B16.9	L55EA1DB
90 LR ELL		12 – 24	40	Weld	CS, ASTM A234-WPB-S, ASME B16.9	L50EA1BC
45 LR ELL		12 – 24	40	Weld	CS, ASTM A234-WPB-S, ASME B16.9	L50EA1AC
Tee		12 – 24	40	Weld	CS, ASTM A234-WPB-S, ASME B16.9	L51EA1
Tee (RED)		12 – 24	40	Weld	CS, ASTM A234-WPB-S, ASME B16.9	L51EA1D
Cap		12 – 24	40	Weld	CS, ASTM A234-WPB-S, ASME B16.9	L57EA1R
VALVES						
Gate	67	1/2 – 1/2	Class 800	MSW/FSW	CS body, API #8 trim, BB, RP, EXTD BDY	L20KAXHDM
Gate	15	3/4 – 1-1/2	Class 300	RF	CS body, API #8 trim, BB, RP	L20FA3DD
Gate	06	3/4 – 1-1/2	Class 800	T/SW	CS body, API #8 trim, BB, RP	L20KA7DD
Gate		3/4 – 1-1/2	Class 800	SW	CS body, API #8 trim, BB, RP	L20KA1DD
Gate	325	3/4 – 1-1/2	Class 800	SW	CS body, API #8 trim, BB, FP	L20KA1DD
Gate	161	3/4 – 1-1/2	Class 800	T/SW	CS body, API #8 trim, BELLOW SEAL, BB, RP	L20KA7DDL
Gate	161	3/4 – 1-1/2	Class 800	SW	CS body, API #8 trim, BELLOW SEAL, BB, RP	L20KA1DDL
Gate	161,325	3/4 – 1-1/2	Class 800	SW	CS body, API #8 trim, BELLOW SEAL, BB, FP	L20KA1DDL
Gate	06	3/4 – 1-1/2	Class 800	MSW/FNPT	CS body, API #8 trim, BB, RP, EXTD BDY	L20KAYHDM
Gate		2 - 6	Class 300	RF	CS body, API #8 trim, BB, FP	L20FA3DD
Gate		8 - 24	Class 300	RF	CS body, API #8 trim, BB, FP, GO	L20FA3DDF
Globe	161, 307	3/4 – 1-1/2	Class 800	SW	CS body, API #8 trim, BELLOW SEAL, WB	L21KA1JEL
Globe	307	3/4 – 1-1/2	Class 800	SW	CS body, API #8 trim, BB	L21KA1DE
Globe	307	2 - 2	Class 300	RF	CS body, API #8 trim, BB	L21FA3DE
Globe	307	3 - 8	Class 300	RF	CS body, API #8 trim, BB, GO	L21FA3DEB
Check	61,328	3/4 – 1-1/2	Class 800	SW	CS body, API #8 trim, BC, piston, HORIZ	L22KA1TEF
Check	62,328	2 – 24	Class 300	RF	CS body, API #8 trim, BC, Swing	L22FA3PE
Check	62,328	2 – 24	Class 300	RF	CS body, API #8 trim, Dual Plate	L22FA3LEH
Ball	26, 101, 164	2 - 12	Class 300	RF	CS, body T3 MOD, Orbit H8 seat	L25FB3FD
Ball	26, 63, 101	2 - 12	Class 300	RF	CS, body T3 MOD, Orbit H seat	L25FB3FF
Butterfly	101	2 – 24	Class 300	RF	CS body, 316 SS trim, Flg, Triple Offset GO	L26FA3TJM
FLANGES	02					
Socket Weld		3/4 – 1-1/2	Class 300	RF	CS, ASTM A105, ASME B16.5, 160 Bore	L40FA3BL
Blind		3/4 – 24	Class 300	RF	CS, ASTM A105, ASME B16.5	L43FA3
Blind Spectacle		3/4 – 14	Class 300	RF	CS, ASTM A516-70, ASME B16.48	L45FA3E
Spacer Ring		16 – 24	Class 300	RF	CS, ASTM A516-70, ASME B16.48	L45FA3FZ
Blind Plate		16 – 24	Class 300	RF	CS, ASTM A516-70, ASME B16.48	L45FA3GZ
Weld Neck		2 – 3	Class 300	RF	CS, ASTM A105, ASME B16.5, XS Bore	L40FA3DN
Weld Neck		4 – 10	Class 300	RF	CS, ASTM A105, ASME B16.5, STD WT Bore	L40FA3DM
Weld Neck		12 – 24	Class 300	RF	CS, ASTM A105, ASME B16.5, 40 Bore	L40FA3DE
Pair WN Orifice		2 – 3	Class 300	RF	CS, ASTM A105, ASME B16.36, ½ SW taps, XS Bore	L42FA3DNL
Pair WN Orifice		4 – 10	Class 300	RF	CS, ASTM A105, ASME B16.36, ½ SW taps, STD WT Bore	L42FA3DML
Pair WN Orifice	17	12 – 18	Class 300	RF	CS, ASTM A105, ASME B16.36, ½ SW taps, 40 Bore	L42FA3DEL
GASKETS						
		3/4 - 24	Class 300	RF	Spiral wound type 316L SS w/ flexible Inhibited Graphite filler, ASME B16.20, w/inner ring.	L61FF1CAC
	301	3/4 – 24	Class 300		KAM style, 316LSS w/APX-2 Graphite, EXH-SU-5151	L61FF1ZA
BOLTING						
Stud Bolts	310	3/4 – 24			ASTM A193, Gr B7 stud w/ 2 heavy hex nuts ASTM A194, Gr 2H	L620BM
Stud Bolts	311	3/4 – 24			ASTM A193, Gr B16 stud w/ 2 heavy hex nuts ASTM A194, Gr 7	L620CM

90° BRANCH CONNECTION, Legend and Chart

BRANCH	24	20	18	16	14	12	10	8	6	4	3	2	1-1/2	1	3/4	1/2
24	T															
20	E	T														
18	E	E	T													
16	E	E	E	T												
14	E	E	E	E	T											
12	E	E	E	E	E	T										
10	E	E	E	E	E	E	T									
8	W	E	E	E	E	E	E	T								
6	W	W	W	E	E	E	E	E	T							
4	W	W	W	W	W	W	E	E	E	T						
3	W	W	W	W	W	W	W	E	E	E	T					
2	W	W	W	W	W	W	W	W	W	E	E	T				
1-1/2	S	S	S	S	S	S	S	S	S	S	S	S	T			
1	S	S	S	S	S	S	S	S	S	S	S	S	E	T		
3/4	S	S	S	S	S	S	S	S	S	S	S	S	E	E	T	
1/2	S	S	S	S	S	S	S	S	S	S	S	S	E	E	E	T

HEADER SIZE

E Reducing Tee
P Branch Weld w/ Reinforcing Pad (Pad thickness equals run pipe thickness. Pad width equals 1/2 branch OD.)
T Equal Tee
S Sockolet
W Weldolet (Note 05)

NOTES:

03 THREADED JOINTS ARE PERMITTED ONLY AT OUTLET OF VENT AND DRAIN VALVES, AT HYDROSTATIC CONNECTIONS, AT OUTLET OF INSTRUMENT TAKE-OFF VALVES, AND TO MATCH EQUIPMENT.
05 INTEGRALLY REINFORCED BRANCH CONNECTIONS ARE PERMITTED OUTSIDE THE SIZES SHOWN IN THE BRANCH CONNECTION TABLE. DESIGNER SHALL CHECK WELD THICKNESS OF INTEGRALLY REINFORCED CONNECTIONS TO DETERMINE IF PWHT IS REQUIRED.
06 THESE VALVES SHALL BE USED FOR VENT, DRAIN AND INSTRUMENT CONNECTIONS ONLY.
09 PRESSURE AND TEMPERATURE RATING MAY BE LIMITED BY CERTAIN COMPONENTS PERMITTED BY THIS SPECIFICATION. REFER TO MANUFACTURER'S RECOMMENDED PRESSURE-TEMPERATURE RESTRICTIONS.
15 TO BE USED WHEN MATING TO FLANGED NOZZLES.
20 SCH XXS PIPE AND PIPE NIPPLES SHALL BE USED FOR THREADED CONNECTIONS FOR SIZES NPS 1/2 – 1-1/2.
26 TO BE USED ONLY WHEN INDICATED ON THE P&ID.
61 INSTALL IN HORIZONTAL POSITION WITH COVER UP.
62 INSTALL IN HORIZONTAL POSITION WITH COVER UP OR IN VERTICAL POSITION WITH UPWARD FLOW.
300 FOR PIPING SYSTEM MAWP LOWER THAN PIPE CLASS MAX. PRESSURE, SEE FIG. 323.2.2B IN ASME B31.3 FOR REDUCTION IN MINIMUM DESIGN METAL TEMPERATURE.
301 FOR USE IN VOC REGULATED SERVICES; IN FLANGES WITH SLIGHTLY DAMAGED GASKET SEATING FACES; OR IN FLANGES WITH A HISTORY OF LEAKING.
302 MAXIMUM HYDROGEN PARTIAL PRESSURE FOR STEELS IN HYDROGEN SERVICE. PRESSURE LIMITS ARE BASED ON FIGURE 1 IN API 941 WITH A REQUIRED SAFETY FACTOR OF -50°F (-10°F) AND -50 PSI (-345 KPA).
307 LIMITED TO THROTTLING SERVICES UP TO 150 PSI DIFFERENTIAL PRESSURE. FOR SERVICE APPLICATIONS WITH DIFFERENTIAL PRESSURES GREATER THAN 150 PSI, CONSULT WITH THE VALVE MANUFACTURER AND CHEVRON PIPING & VALVE SME FOR SUITABILITY.
310 ASME A193/SA193 GR. B7 STUD BOLTING IS LIMITED TO PROCESS SERVICE TEMPERATURES NOT GREATER THAN 700°F TO AVOID THERMAL FATIGUE CRACKING.
311 ASME A193/SA193 GR. B16 STUD BOLTING SHOULD BE USED IN ALL PROCESS SERVICES WITH TEMPERATURES GREATER THAN 700°F. FLANGES SHOULD NOT BE INSULATED AT PROCESS SERVICE TEMPERATURES ABOVE 850°F TO AVOID THERMAL FATIGUE CRACKING. AT TEMPERATURES GREATER THAN 850°F, WEATHER SHIELDS OVER FLANGES ARE ACCEPTABLE.
325 USE FULL PORT VALVES IN LOCATIONS REQUIRING FULL OPENINGS SUCH AS UPSTREAM AND DOWNSTREAM OF RELIEF VALVES OR IN HORIZONTAL LINES CONTAINING HAZARDOUS LIQUIDS.
328 SIZING AND LOCATION OF CHECK VALVES IS CRITICAL FOR RELIABLE OPERATION. SEE SECTION 6.0 (25) IN THE GENERAL SPECIFICATION FOR MORE INFORMATION.
17 USE WELD NECK FLANGES AND THROAT TAPS NPS 20 INCH AND LARGER
63 ORBIT VALVE WITH TYPE "H" SEATS LIMITED TO 500F.
67 USE RESTRICTED ORIFICE FLANGE TAP CONNECTIONS. THREADED NIPPLES TO BE SEAL WELDED. NIPPLE LENGTHS SHALL BE IN ACCORDANCE WITH STANDARD DRAWING D-601407.
92 USE RESTRICTED TO THERMOWELL ASSEMBLIES.
101 TO BE USED WHERE TIGHT SHUT-OFF IS REQUIRED.
161 USE BELLOW SEAL GATE VALVES FOR ALL IN-KIND REPLACEMENT ONLY. INSTALL NEW BELLOW SEALVALVES WHEN REQUIRED BY PROJECT FOR PERMIT PURPOSES.
164 USE ORBIT VALVES WITH T7 (CORROSIVE) TRIM & TYPE h8 SEAT IN 500 F TO 650 F TEMP RANGE.

SERVICE:

- HC Liquid Gas & Vapor (Corrosive)
- HC Liquid Gas & Vapor (Corrosive) w/ Trace H2S
- LPG (Corrosive) & LPG w/ Trace H2S
- LPG w/HC Mixtures (Corrosive)
- LPG w/HC Mixtures (Corrosive) w/ Trace H2S
- H2 & H2/HC to 450F (232C)
- H2 & H2/HC w/ Trace H2S to 450F (232C)

CUSA-CSB-0019059
EPA

SERVICE:	Process	LIMITED BY:	Flanges
RATING CLASS:	300 RF, ASME B16.5-2009	MATERIAL:	Carbon Steel
TEMPERATURE LIMIT:	Min. to 450F	DESIGN CODE:	ASME B31.3-2008
NOMINAL CORROSION ALLOWANCE:	0.187 in. (0.145 in. MIN)	STRESS RELIEF:	NONE
VALVE TRIM:	Monel	EXAMINATION:	5% RT, PT & Visual

PRESSURE - TEMPERATURE RATINGS			NOTE: HYDROTEST @ AMBIENT = 1125 psig		
TEMP F	Min. to 100	200	300	400	450
psig	740	680	655	635	620
TEMP C	Min. to 38	93	149	204	232
kPag	5105	4690	4515	4380	4275

For NPS 3/4 through NPS 24 (Full flange ratings per ASME B16.5, Table 2-1.1.)

MINIMUM TEMPERATURE (see Note 300)						
SIZE:	¾" - 12"	14"	16"	18"	20"	24"
°F:	-20	-2	+6	+15	+20	+31
°C:	-29	-19	-14	-9	-6	0

ITEM	NOTES	NPS	SCH/RAT	ENDS	DESCRIPTION	ITEM CODE
PIPE	01, 20					
		3/4 – 1	XXS	PE	CS, SMLS, ASTM A106-B	L11PA1B
		1-1/2 – 1-1/2	160	PE	CS, SMLS, ASTM A106-B	L11LA1B
		2 – 2	160	BE	CS, SMLS ASTM A106-B	L11LA2A
		3 – 16	XS	BE	CS, SMLS ASTM A106-B	L11NA2A
		18 – 24	40	BE	CS, SMLS ASTM A106-B	L11EA2A
NIPPLES	03, 20					
Branch		3/4 – 1	XXS	PE	CS, SMLS, ASTM A106-B	L34PAEJ
Branch		1-1/2 – 1-1/2	160	PE	CS, SMLS, ASTM A106-B	L34LAEJ
Branch		3/4 – 1-1/2	XXS	TOE-POE	CS, SMLS, ASTM A106-B	L34PAHJ
Swage (CONC)		3/4 – 1	XXS	BBE	CS, ASTM A234-WPB-S, MSS SP-95	L55PA1VA
Swage (CONC)		1-1/2 – 1-1/2	160	BE	CS, ASTM A234-WPB-S, MSS SP-95	L55LA1VA
Swage (CONC)		3/4 – 1-1/2	XXS	BLE-TSE	CS, ASTM A234-WPB-S, MSS SP-95	L35PBMQ
FITTINGS	02, 117					
Sockolet		3/4 – 1	Class 9000	SW	CS, ASTM A105, MSS SP-97	L36WBDT
Sockolet		1-1/2 – 1-1/2	Class 6000	SW	CS, ASTM A105, MSS SP-97	L36VBDT
Thredolet	03	3/4 – 1-1/2	Class 6000	THRD	CS, ASTM A105, MSS SP-97	L36VBAT
SW Elbolet		3/4 – 1	Class 9000	SW	CS, ASTM A105	L36WBDU
SW Elbolet		1-1/2 – 1-1/2	Class 6000	SW	CS, ASTM A105	L36VBDU
Latrolet	92	1-1/2 – 1-1/2	160	Weld	CS, ASTM A105	L56LA1K
Weldolet	05	1-1/2 – 1-1/2	160	Weld	CS, ASTM A105, MSS SP-97	L56LA1H
90 ELL		3/4 – 1	Class 9000	SW	CS, ASTM A105, ASME B16.11	L30WBDB
45 ELL		3/4 – 1	Class 9000	SW	CS, ASTM A105, ASME B16.11	L30WBDA
Tee		3/4 – 1	Class 9000	SW	CS, ASTM A105, ASME B16.11	L31WBD
Tee (RED)		3/4 – 1	Class 9000	SW	CS, ASTM A105, ASME B16.11	W31WBDD
90 ELL		1-1/2 – 1-1/2	Class 6000	SW	CS, ASTM A105, ASME B16.11	L30VBDB
45 ELL		1-1/2 – 1-1/2	Class 6000	SW	CS, ASTM A105, ASME B16.11	L30VBDA
Tee		1-1/2 – 1-1/2	Class 6000	SW	CS, ASTM A105, ASME B16.11	L31VBD
Tee	03	3/4 – 1-1/2	Class 6000	THRD	CS, ASTM A105, ASME B16.11	L31VBA
Tee (RED)		1-1/2 – 1-1/2	Class 6000	SW	CS, ASTM A105, ASME B16.11	L31VBDD
Plug	03	3/4 – 1-1/2		THRD	CS, ASTM A105, round head, ASME B16.11	L370ABW
Plug		3/4 – 1-1/2		PE	CS, ASTM A105, round head, ASME B16.11	L370AEW
Coupling		3/4 – 1	Class 9000	SW	CS, ASTM A105, ASME B16.11	L34WBDH
Cap		3/4 – 1	Class 9000	SW	CS, ASTM A105, ASME B16.11	L37WBDX
Coupling		1-1/2 – 1-1/2	Class 6000	SW	CS, ASTM A105, ASME B16.11	L34VBDH
Cap		1-1/2 – 1-1/2	Class 6000	SW	CS, ASTM A105, ASME B16.11	L37VBDX
Reducer (CONC)		2 – 2	160	Weld	CS, ASTM A234-WPB-S, ASME B16.9	L55LA1DA
Reducer (ECC)		2 – 2	160	Weld	CS, ASTM A234-WPB-S, ASME B16.9	L55LA1DB
Weldolet	05	2 – 2	160	Weld	CS, ASTM A105, MSS SP-97	L56LA1H
90 LR ELL		2 – 2	160	Weld	CS, ASTM A234-WPB-S, ASME B16.9	L50LA1BC
45 LR ELL		2 – 2	160	Weld	CS, ASTM A234-WPB-S, ASME B16.9	L50LA1AC
Tee		2 – 2	160	Weld	CS, ASTM A234-WPB-S, ASME B16.9	L51LA1

ITEM	NOTES	NPS	SCH/RAT	ENDS	DESCRIPTION	ITEM CODE
Tee (RED)		2 – 2	160	Weld	CS, ASTM A234-WPB-S, ASME B16.9	L51LA1D
Cap		2 – 2	160	Weld	CS, ASTM A234-WPB-S, ASME B16.9	L57LA1R
Reducer (CONC)		3 – 16	XS	Weld	CS, ASTM A234-WPB-S, ASME B16.9	L55NA1DA
Reducer (ECC)		3 – 16	XS	Weld	CS, ASTM A234-WPB-S, ASME B16.9	L55NA1DB
Weldolet	05	3 – 8	XS	Weld	CS, ASTM A105, MSS SP-97	L56NA1H
90 LR ELL		3 – 16	XS	Weld	CS, ASTM A234-WPB-S, ASME B16.9	L50NA1BC
45 LR ELL		3 – 16	XS	Weld	CS, ASTM A234-WPB-S, ASME B16.9	L50NA1AC
Tee		3 – 16	XS	Weld	CS, ASTM A234-WPB-S, ASME B16.9	L51NA1
Tee (RED)		3 – 16	XS	Weld	CS, ASTM A234-WPB-S, ASME B16.9	L51NA1D
Cap		3 – 16	XS	Weld	CS, ASTM A234-WPB-S, ASME B16.9	L57NA1R
Reducer (CONC)		18 – 24	40	Weld	CS, ASTM A234-WPB-S, ASME B16.9	L55EA1DA
Reducer (ECC)		18 – 24	40	Weld	CS, ASTM A234-WPB-S, ASME B16.9	L55EA1DB
90 LR ELL		18 – 24	40	Weld	CS, ASTM A234-WPB-S, ASME B16.9	L50EA1BC
45 LR ELL		18 – 24	40	Weld	CS, ASTM A234-WPB-S, ASME B16.9	L50EA1AC
Tee		18 – 24	40	Weld	CS, ASTM A234-WPB-S, ASME B16.9	L51EA1
Tee (RED)		18 – 24	40	Weld	CS, ASTM A234-WPB-S, ASME B16.9	L51EA1D
Cap		18 – 24	40	Weld	CS, ASTM A234-WPB-S, ASME B16.9	L57EA1R
VALVES						
Gate	67	1/2 – 1/2	Class 800	MSW/FSW	CS body, MONEL trim#9, BB, RP, EXTD BDY	L20KAXHPM
Gate	15	3/4 – 1-1/2	Class 300	RF	CS body, MONEL trim#9, BB, RP	L20FA3HP
Gate	06	3/4 – 1-1/2	Class 800	T/SW	CS body, MONEL trim#9, BB, RP	L20KA7HP
Gate		3/4 – 1-1/2	Class 800	SW	CS body, MONEL trim#9, BB, RP	L20KA1HP
Gate	325	3/4 – 1-1/2	Class 800	SW	CS body, MONEL trim#9, BB, FP	L20KA1DP
Gate	06	3/4 – 1-1/2	Class 800	MSW/FNPT	CS body, MONEL trim#9, BB, RP, EXTD BDY	L20KAYHPM
Gate		2 - 10	Class 300	RF	CS body, MONEL trim#9, BB, FP	L20FA3DP
Gate		12 – 24	Class 300	RF	CS body, MONEL trim#9, BB, FP,GO	L20FA3DPF
Globe	307	3/4 – 1-1/2	Class 800	SW	CS body, MONEL trim#9, BB	L21KA1D3
Globe	307	2 – 12	Class 300	RF	CS body, MONEL trim#9, BB	L21FA3D3
Lift Check	61,328	3/4 – 1-1/2	Class 800	SW	CS body, MONEL trim#9, BC, piston, Horiz.	L22KA1T3F
Swing Check	62,328	2 – 24	Class 300	RF	CS body, MONEL trim#9, BC, Swing	L22FA3P3
Check	62,328	2 – 24	Class 300	RF	CS body, MONEL API #9 trim, Dual Plate	L22FA3L3H
Ball	101, 327	2 – 6	Class 300	RF	CS body, MONEL trim#9, RP, TFE seat, FS	L25FA3CK
Ball	101, 327	8 – 24	Class 300	RF	CS body, MONEL trim#9, RP, TFE seat, FS, GO	L25FA3CKM
Butterfly	101	2 – 24	Class 300	RF	CS body, MONEL trim#9, Flg, Triple Offset GO	L26FA3T4M
FLANGES	02					
Socket Weld		3/4 – 1	Class 300	RF	CS, ASTM A105, ASME B16.5, XXS Bore	L40FA3BP
Socket Weld		1-1/2 – 1-1/2	Class 300	RF	CS, ASTM A105, ASME B16.5, 160 Bore	L40FA3BL
Blind		3/4 – 24	Class 300	RF	CS, ASTM A105, ASME B16.5	L43FA3
Blind Spectacle		3/4 – 14	Class 300	RF	CS, ASTM A516-70, ASME B16.48	L45FA3E
Spacer Ring		16 – 24	Class 300	RF	CS, ASTM A516-70, ASME B16.48	L45FA3F
Blind Plate		16 – 24	Class 300	RF	CS, ASTM A516-70, ASME B16.48	L45FA3G
Weld Neck		2 – 2	Class 300	RF	CS, ASTM A105, ASME B16.5, 160 Bore	L40FA3DL
Weld Neck		3 – 16	Class 300	RF	CS, ASTM A105, ASME B16.5, XS Bore	L40FA3DN
Weld Neck		18 –24	Class 300	RF	CS, ASTM A105, ASME B16.5, 40 Bore	L40FA3DE
Pair WN Orifice		1-1/2 – 2	Class 300	RF	CS, ASTM A105, ASME B16.36, ½ SW taps, 160 Bore	L42FA3DLL
Pair WN Orifice		3 – 126	Class 300	RF	CS, ASTM A105, ASME B16.36, ½ W taps, XS Bore	L42FA3DNL
Pair WN Orifice	17	18 – 18	Class 300	RF	CS, ASTM A105, ASME B16.36, ½ SW taps, 40 Bore	L42FA3DEL
GASKETS						
		3/4 - 24	Class 300	RF	Spiral wound type Monel w/ flexible Inhibited Graphite filler, ASME B16.20, w/ Monel inner ring.	L61FN1CAJ
	301	3/4 – 24	Class 300		KAM style, Monel w/APX-2 Graphite, EXH-SU-5151	L61FN1ZA
BOLTING						
Stud Bolts		3/4 – 24			ASTM A193, Gr B7 stud w/ 2 heavy hex nuts ASTM A194, Gr 2H	L620BM

90° BRANCH CONNECTION, Legend and Chart

BRANCH \ HEADER SIZE	24	20	18	16	14	12	10	8	6	4	3	2	1-1/2	1	3/4	1/2
24	T															
20	E	T														
18	E	E	T													
16	E	E	E	T												
14	E	E	E	E	T											
12	E	E	E	E	E	T										
10	E	E	E	E	E	E	T									
8	W	E	E	E	E	E	E	T								
6	W	W	W	E	E	E	E	E	T							
4	W	W	W	W	W	W	E	E	E	T						
3	W	W	W	W	W	W	W	E	E	E	T					
2	W	W	W	W	W	W	W	W	W	E	E	T				
1-1/2	S	S	S	S	S	S	S	S	S	S	S	S	T			
1	S	S	S	S	S	S	S	S	S	S	S	S	E	T		
3/4	S	S	S	S	S	S	S	S	S	S	S	S	E	E	T	
1/2	S	S	S	S	S	S	S	S	S	S	S	S	E	E	E	T

E Reducing Tee
P Branch Weld w/ Reinforcing Pad (Pad thickness equals run pipe thickness. Pad width equals 1/2 branch OD.)
T Equal Tee
S Sockolet
W Weldolet (Note 05)

NOTES:

01 WHERE PIPE SCHEDULE IS SHOWN UNDER "SCH/RAT," IT IS ADEQUATE FOR THE FULL FLANGE RATING. WHERE "CALC" IS SHOWN, THE PRESSURE LIMIT MAY BE LOWER THAN FLANGE RATING.
02 ALL BUTTWELDED COMPONENT THICKNESSES SHALL MATCH PIPE THICKNESSES.
03 THREADED JOINTS ARE PERMITTED ONLY AT OUTLET OF VENT AND DRAIN VALVES, AT HYDROSTATIC CONNECTIONS, AT OUTLET OF INSTRUMENT TAKE-OFF VALVES, AND TO MATCH EQUIPMENT.
05 INTEGRALLY REINFORCED BRANCH CONNECTIONS ARE PERMITTED OUTSIDE THE SIZES SHOWN IN THE BRANCH CONNECTION TABLE. DESIGNER SHALL CHECK WELD THICKNESS OF INTEGRALLY REINFORCED CONNECTIONS TO DETERMINE IF PWHT IS REQUIRED.
06 THESE VALVES SHALL BE USED FOR VENT, DRAIN AND INSTRUMENT CONNECTIONS ONLY.
15 TO BE USED WHEN MATING TO FLANGED NOZZLES.
20 SCH XXS PIPE AND PIPE NIPPLES SHALL BE USED FOR THREADED CONNECTIONS FOR SIZES 1/2 – 2.
27 PIPE AND PIPE COMPONENTS THICKER THAN 1/2 INCH MAY REQUIRE IMPACT TESTED MATERIALS WHEN THE MINIMUM DESIGN METAL TEMPERATURE IS BELOW 100F (38C) (SEE ASME B31.3, PARAGRAPH 323.2.2).
61 INSTALL IN HORIZONTAL POSITION WITH COVER UP.
62 INSTALL IN HORIZONTAL POSITION WITH COVER UP OR IN VERTICAL POSITION WITH UPWARD FLOW.
300 FOR PIPING SYSTEM MAWP LOWER THAN PIPE CLASS MAX. PRESSURE, SEE FIG. 323.2.2B IN ASME B31.3 FOR REDUCTION IN MINIMUM DESIGN METAL TEMPERATURE.
301 FOR USE IN VOC REGULATED SERVICES; IN FLANGES WITH SLIGHTLY DAMAGED GASKET SEATING FACES; OR IN FLANGES WITH A HISTORY OF LEAKING.
307 LIMITED TO THROTTLING SERVICES UP TO 150 PSI DIFFERENTIAL PRESSURE. FOR SERVICE APPLICATIONS WITH DIFFERENTIAL PRESSURES GREATER THAN 150 PSI, CONSULT WITH THE VALVE MANUFACTURER AND CHEVRON PIPING & VALVE SME FOR SUITABILITY.
325 USE FULL PORT VALVES IN LOCATIONS REQUIRING FULL OPENINGS SUCH AS UPSTREAM AND DOWNSTREAM OF RELIEF VALVES OR IN HORIZONTAL LINES CONTAINING HAZARDOUS LIQUIDS.
327 LIMITED TO PROCESS TEMPERATURES UP TO 250°F (121°C)
328 SIZING AND LOCATION OF CHECK VALVES IS CRITICAL FOR RELIABLE OPERATION. SEE SECTION 6.0 (25) IN THE GENERAL SPECIFICATION FOR MORE INFORMATION.
17 USE WELD NECK FLANGES AND THROAT TAPS NPS 20 INCH AND LARGER.
67 USE RESTRICTED TO ORIFICE FLANGE TAP CONNECTIONS.
92 USE RESTRICTED TO THERMOWELL ASSEMBLIES.
117 6000LB (3/4: &1") SOCKET WELD FITTING WILL HAVE A 15 YEAR LIFE BASED ON A 9 MILS PER YEAR CORROSION RATE. IF A LONGER LIFE FITTING IS DESIRED USE 9000 LB RATING FITTING.

SERVICES:

- Desalter Water
- Desalter Effluent Water

SERVICE:	Process	MATERIAL:	5 CR - 1/2 MO
RATING CLASS:	300 RF, ASME B16.5-2009	DESIGN CODE:	ASME B31.3-2008
TEMPERATURE LIMIT:	-20F to 800F	STRESS RELIEF:	YES
NOMINAL CORROSION ALLOWANCE:	0.063 in. (0.05 in. MIN)	EXAMINATION:	25% RT, PT & Visual
VALVE TRIM:	API #8 (13CR & HF)		

PRESSURE - TEMPERATURE RATINGS				NOTE: HYDROTEST @ AMBIENT = 1125 psig				
TEMP F	-20 to 100	200	300	400	500	600	700	800
psig	750	750	730	705	665	605	570	510
TEMP C	-29 to 38	93	149	204	260	316	371	427
kPag	5175	5170	5035	4860	4585	4175	3930	3515

For NPS 3/4 through NPS 24 (Full flange ratings per ASME B16.5, Table 2-1.13.)

ITEM	NOTES	NPS	SCH/RAT	ENDS	DESCRIPTION	ITEM CODE
PIPE	01, 19					
		3/4 – 1-1/2	XS/80	PE	5 CR - 1/2 MO, SMLS, ASTM A335-P5	L11NT1
		2 – 2	XS/80	BE	5 CR - 1/2 MO, SMLS, ASTM A335-P5	L11NT2
		3 – 12	STD	BE	5 CR - 1/2 MO, SMLS, ASTM A335-P5	L11MT2
		14 – 24	40	BE	5 CR - 1/2 MO, SMLS, ASTM A335-P5	L11ET2
NIPPLES	03, 19					
Branch		3/4 – 1-1/2	XS/80	PE	5 CR - 1/2 MO, SMLS, ASTM A335-P5	L34NTEJ
Branch		3/4 – 1-1/2	160	TOE-POE	5 CR - 1/2 MO, SMLS, ASTM A335-P5	L34LTHJ
Swage (CONC)		3/4 – 1-1/2	XS/80	BBE	5 CR - 1/2 MO, ASTM A234-WP5-S, MSS SP-95	L55NT1VA
Swage CONC)		3/4 – 1-1/2	XXS	BLE-TSE	5 CR - 1/2 MO, ASTM A234-WP5-S, MSS SP-95	L35PTMQ
FITTINGS	02					
Sockolet		3/4 – 1-1/2	Class 3000	SW	5 CR - 1/2 MO, ASTM A182-F5, MSS SP-97	L36STDT
Thredolet	03	3/4 – 1-1/2	Class 3000	THRD	5 CR - 1/2 MO, ASTM A182-F5, MSS SP-97	L36STAT
SW Elbolet		3/4 – 1-1/2	Class 3000	SW	5 CR - 1/2 MO, ASTM A182-F5, ASME B16.11	L36STDU
Latrolet	92	3/4 – 1-1/2	XS/80	Weld	5 CR - 1/2 MO, ASTM A182-F5	L56NT1K
Weldolet	05	3/4 – 1-1/2	XS/80	Weld	5 CR - 1/2 MO, ASTM A182-F5, MSS SP-97	L56NT1H
90 ELL		3/4 – 1-1/2	Class 3000	SW	5 CR - 1/2 MO, ASTM A182-F5, ASME B16.11	L30STDB
45 ELL		3/4 – 1-1/2	Class 3000	SW	5 CR - 1/2 MO, ASTM A182-F5, ASME B16.11	L30STDA
Tee		3/4 – 1-1/2	Class 3000	SW	5 CR - 1/2 MO, ASTM A182-F5, ASME B16.11	L31STD
Tee (RED)		3/4 – 1-1/2	Class 3000	SW	5 CR - 1/2 MO, ASTM A182-F5, ASME B16.11	L31STDD
Plug	03	3/4 – 1-1/2		THRD	5 CR - 1/2 MO, ASTM A182-F5, rd. hd., ASME B16.11	L370TBW
Plug		3/4 – 1-1/2		PE	5 CR - 1/2 MO, ASTM A182-F5, rd. hd., ASME B16.11	L370TEW
Coupling		3/4 – 1-1/2	Class 3000	SW	5 CR - 1/2 MO, ASTM A182-F5, ASME B16.11	L34STDH
Cap		3/4 – 1-1/2	Class 3000	SW	5 CR - 1/2 MO, ASTM A182-F5, ASME B16.11	L37STDX
Reducer (CONC)		2 – 2	XS/80	Weld	5 CR - 1/2 MO, ASTM A234-WP5-S, ASME B16.9	L55NT1DA
Reducer (ECC)		2 – 2	XS/80	Weld	5 CR - 1/2 MO, ASTM A234-WP5-S, ASME B16.9	L55NT1DB
Weldolet	05	2 – 2	XS/80	Weld	5 CR - 1/2 MO, ASTM A182-F5, MSS SP-97	L56NT1H
90 LR ELL		2 – 2	XS/80	Weld	5 CR - 1/2 MO, ASTM A234-WP5-S, ASME B16.9	L50NT1BC
45 LR ELL		2 – 2	XS/80	Weld	5 CR - 1/2 MO, ASTM A234-WP5-S, ASME B16.9	L50NT1AC
Tee		2 – 2	XS/80	Weld	5 CR - 1/2 MO, ASTM A234-WP5-S, ASME B16.9	L51NT1
Tee (RED)		2 – 2	XS/80	Weld	5 CR - 1/2 MO, ASTM A234-WP5-S, ASME B16.9	L51NT1D
Cap		2 – 2	XS/80	Weld	5 CR - 1/2 MO, ASTM A234-WP5-S, ASME B16.9	L57NT1R
Reducer (CONC)		3 – 12	STD	Weld	5 CR - 1/2 MO, ASTM A234-WP5-S, ASME B16.9	L55MT1DA
Reducer (ECC)		3 – 12	STD	Weld	5 CR - 1/2 MO, ASTM A234-WP5-S, ASME B16.9	L55MT1DB
Weldolet	05	3 – 8	STD	Weld	5 CR - 1/2 MO, ASTM A182-F5, MSS SP-97	L56MT1H
90 LR ELL		3 – 12	STD	Weld	5 CR - 1/2 MO, ASTM A234-WP5-S, ASME B16.9	L50MT1BC
45 LR ELL		3 – 12	STD	Weld	5 CR - 1/2 MO, ASTM A234-WP5-S, ASME B16.9	L50MT1AC
Tee		3 – 12	STD	Weld	5 CR - 1/2 MO, ASTM A234-WP5-S, ASME B16.9	L51MT1
Tee (RED)		3 – 12	STD	Weld	5 CR - 1/2 MO, ASTM A234-WP5-S, ASME B16.9	L51MT1D
Cap		3 – 12	STD	Weld	5 CR - 1/2 MO, ASTM A234-WP5-S, ASME B16.9	L57MT1R
Reducer (CONC)		14 – 24	40	Weld	5 CR - 1/2 MO, ASTM A234-WP5-S, ASME B16.9	L55ET1DA
Reducer (ECC)		14 – 24	40	Weld	5 CR - 1/2 MO, ASTM A234-WP5-S, ASME B16.9	L55ET1DB
90 LR ELL		14 – 24	40	Weld	5 CR - 1/2 MO, ASTM A234-WP5-S, ASME B16.9	L50ET1BC
45 LR ELL		14 – 24	40	Weld	5 CR - 1/2 MO, ASTM A234-WP5-S, ASME B16.9	L50ET1AC
Tee		14 – 24	40	Weld	5 CR - 1/2 MO, ASTM A234-WP5-S, ASME B16.9	L51ET1
Tee (RED)		14 – 24	40	Weld	5 CR - 1/2 MO, ASTM A234-WP5-S, ASME B16.9	L51ET1D
Cap		14 – 24	40	Weld	5 CR - 1/2 MO, ASTM A234-WP5-S, ASME B16.9	L57ET1R

ITEM	NOTES	NPS	SCH/RAT	ENDS	DESCRIPTION	ITEM CODE
VALVES						
Gate	15	3/4 – 1-1/2	Class 300	RF	5 CR - 1/2 MO body API #8 trim, RP, BB	L20FT3HD
Gate		3/4 – 1-1/2	Class 800	SW	5 CR - 1/2 MO body API #8 trim, RP, BB	L20KT1HD
Gate	325	3/4 – 1-1/2	Class 800	SW	5 CR - 1/2 MO body API #8 trim, FP, BB	L20KT1DD
Gate	06	3/4 – 1-1/2	Class 800	T/SW	5 CR - 1/2 MO body API #8 trim, RP, BB	L20KT7HD
Gate		2 – 6	Class 300	RF	5 CR - 1/2 MO body API #8 trim, BB	L20FT3DD
Gate		8 – 24	Class 300	RF	5 CR - 1/2 MO body API #8 trim, BB, GO	L20FT3DDF
Globe	307	3/4 – 1-1/2	Class 800	SW	5 CR - 1/2 MO body API #8 trim, BB	L21KT1DE
Globe	307	2 – 2	Class 300	RF	5 CR - 1/2 MO body API #8 trim, BB	L21FT3DE
Globe	307	3 – 8	Class 300	RF	5 CR - 1/2 MO body API #8 trim, BB, GO	L21FT3DEB
Check	61,328	3/4 – 1-1/2	Class 800	SW	5 CR - 1/2 MO body API #8 trim, piston	L22KT1TEF
Check	62,328	2 – 24	Class 300	RF	5 CR - 1/2 MO body API #8 trim, Swing	L22FT3PE
FLANGES	02					
Socket Weld		3/4 – 1-1/2	Class 300	RF	5 CR - 1/2 MO, ASTM A182-F5, ASME B16.5, Sch 80	L40FT3BN
Blind		3/4 – 24	Class 300	RF	5 CR - 1/2 MO, ASTM A182-F5, ASME B16.5	L43FT3
Blind Spectacle		3/4 – 14	Class 300	RF	5 CR - 1/2 MO, ASTM A387-5 CL2, B16.48	L45FT3E
Spacer Ring		16 – 24	Class 300	RF	5 CR - 1/2 MO, ASTM A387-5 CL2, B16.48	L45FT3FZ
Blind Plate		16 – 24	Class 300	RF	5 CR - 1/2 MO, ASTM A387-5 CL2, B16.48	L45FT3GZ
Weld Neck		2 – 2	Class 300	RF	5 CR - 1/2 MO, ASTM A182-F5, ASME B16.5, XS/80 BORE	L40FT3DN
Weld Neck		3 – 12	Class 300	RF	5 CR - 1/2 MO, ASTM A182-F5, ASME B16.5, STD BORE	L40FT3DM
Weld Neck		14 – 24	Class 300	RF	5 CR - 1/2 MO, ASTM A182-F5, ASME B16.5, 40 BORE	L40FT3DE
Pair WN Orifice		1 – 2	Class 300	RF	5 CR - 1/2 MO, ASTM A182-F5, ASME B16.36, SW 1/2 taps, XS/80 Bore	L42FT3DNL
Pair WN Orifice		3 – 12	Class 300	RF	5 CR - 1/2 MO, ASTM A182-F5, ASME B16.36, SW 1/2 taps, STD Bore	L42FT3DML
Pair WN Orifice	17	14 – 18	Class 300	RF	5 CR - 1/2 MO, ASTM A182-F5, ASME B16.36, SW 1/2 taps, 40 Bore	L42FT3DEL
GASKETS						
		3/4 – 24	Class 300		Spiral wound type 316L SS w/flexible Inhibited Graphite filler, ASME B16.20, W/inner and outer ring	L61FF1CAC
	301	3/4 – 24	Class 300		KAM style, 316LSS w/APX-2 Graphite, EXH-SU-5151	L61FF1ZA
BOLTING						
Stud Bolts	310	3/4 – 24			ASTM A193, B7 stud w/ 2 heavy hex nuts ASTM A194, GR 2H	L620BM
Stud Bolts	311	3/4 – 24			ASTM A193, B16 stud w/ 2 heavy hex nuts ASTM A194, GR 7	L620CM

CUSA-CSB-0019064
EPA

90° BRANCH CONNECTION, Legend and Chart

BRANCH	24	20	18	16	14	12	10	8	6	4	3	2	1-1/2	1	3/4	1/2
24	T															
20	E	T														
18	E	E	T													
16	E	E	E	T												
14	E	E	E	E	T											
12	E	E	E	E	E	T										
10	E	E	E	E	E	E	T									
8	W	E	E	E	E	E	E	T								
6	W	W	W	E	E	E	E	E	T							
4	W	W	W	W	W	W	E	E	E	T						
3	W	W	W	W	W	W	W	E	E	E	T					
2	W	W	W	W	W	W	W	W	W	E	E	T				
1-1/2	S	S	S	S	S	S	S	S	S	S	S	S	T			
1	S	S	S	S	S	S	S	S	S	S	S	S	E	T		
3/4	S	S	S	S	S	S	S	S	S	S	S	S	E	E	T	
1/2	S	S	S	S	S	S	S	S	S	S	S	S	E	E	E	T

HEADER SIZE

E Reducing Tee
P Branch Weld w/ Reinforcing Pad (Pad thickness equals run pipe thickness. Pad width equals 1/2 branch OD.)
T Equal Tee
S Sockolet
W Weldolet (Note 05)

NOTES:

01 Where pipe schedule is shown under "SCH/RAT", it is adequate for full flange rating. Where "Calc." is shown, the pressure limit may be lower than flange ratings.
02 All buttwelded component thicknesses shall match pipe thicknesses.
03 Threaded joints are permitted only at outlet of vent and drain valves, at hydrostatic connections, at outlet of instrument take-off valves, and to match the equipment.
05 Integrally reinforced branch connections are permitted outside the sizes shown in the branch connection tables. Weld thickness of integrally reinforced branch connections shall be checked to determine if PWHT is required.
06 These valves shall be used only for vent, drain and instrument connections.
15 To be used when mating flanged valves to flanged nozzles.
19 Sch 160 pipe and pipe nipples shall be used for threaded connections for sizes NPS 1/2 – 1-1/2.
61 Install in horizontal position with cover up.
62 Install in horizontal position with cover up or in vertical position with upward flow.
301 For use in VOC regulated services; in flanges with slightly damaged gasket seating faces; or in flanges with a history of leaking.
307 Limited to throttling services up to 150 psi differential pressure. For service applications with differential pressures greater than 150 psi, consult with the valve manufacturer and Chevron Piping and Valve SME for suitability.
310 ASME A193/SA193 Gr. B7 stud bolting is limited to process service temperatures not greater than 700°F to avoid thermal fatigue cracking.
311 ASME A193/SA193 Gr. B16 stud bolting should be used in all process services with temperatures greater than 700°F. Flanges should not be insulated at process service temperatures above 850°F to avoid thermal fatigue cracking. At temperatures greater than 850°F, weather shields over flanges are acceptable.
325 USE FULL PORT VALVES IN LOCATIONS REQUIRING FULL OPENINGS SUCH AS UPSTREAM AND DOWNSTREAM OF RELIEF VALVES OR IN HORIZONTAL LINES CONTAINING HAZARDOUS LIQUIDS.
328 SIZING AND LOCATION OF CHECK VALVES IS CRITICAL FOR RELIABLE OPERATION. SEE SECTION 6.0 (25) IN THE GENERAL SPECIFICATION FOR MORE INFORMATION.
17 Use Weld Neck Flanges and Throat Taps 20 Inches and Larger.
92 Use Restricted to Thermowell Assemblies Only.

SERVICE:

- Sulfides, HC
- Hydrocarbons
- Sulfide (Corrosive)

CUSA-CSB-0019065
EPA

PIPING CLASSIFICATION - AB1

Size Inch	Item No.	Description	Note Nos.
		PIPE	
3/4 - 1-1/2	L11NA1B	PIPE SMLS XS CS(A106-B) PE	
2 - 2	L11NA2A	PIPE SMLS XS CS(A53-B) BFW	
3 - 24	L11MA2A	PIPE SMLS STD WT CS(A53-B) BFW	
28 - 30	L14MA2A	PIPE SMLS/DSAW STD WT CS(API-5L)BFW	202
		FITTINGS	
1/2 - 1/2	L370ABW	PLUG CS(A105) SCRD	67
3/4 - 1-1/2	L30SBDA	ELBOW CL3000 CS(A105) SW 45-DEG	
	L30SBDB	ELBOW CL3000 CS(A105) SW 90-DEG	
	L34SBDH	CPLG CL3000 CS(A105) SW	
	L35PBMQ	SWGE NIPPLE XXS CS(A234-WPB) BLE-TSE CONC	96
	L370ABW	PLUG CS(A105) SCRD	90,94
	L370AEW	PLUG CS(A105) PE	
	L37SBDX	CAP CL3000 CS(A105) SW	
	L55NA1VA	SWGE NIPPLE XS CS(A234-WPB) BE CONC	
2 - 2	L50NA1AC	ELBOW XS CS(A234-WPB) BW 45-DEG	
	L50NA1BC	ELBOW XS CS(A234-WPB) BW 90-DEG LR	
	L55NA1DA	REDUCER XS CS(A234-WPB) BW CONC	
	L55NA1DB	REDUCER XS CS(A234-WPB) BW ECC	
	L57NA1R	CAP XS CS(A234-WPB) BW	
3 - 30	L50MA1AC	ELBOW STD WT CS(A234-WPB) BW 45-DEG	
	L50MA1BC	ELBOW STD WT CS(A234-WPB) BW 90-DEG LR	
	L55MA1DA	REDUCER STD WT CS(A234-WPB) BW CONC	
	L55MA1DB	REDUCER STD WT CS(A234-WPB) BW ECC	
	L57MA1R	CAP STD WT CS(A234-WPB) BW	
		BRANCHES	
1/2 - 1/2	L31VBA	TEE CL6000 CS(A105) SCRD	67
3/4 - 3/4	L36SBAT	THREDOLET CL3000 CS(A105) SCRD	90
3/4 - 1-1/2	L31SBA	TEE CL3000 CS(A105) SCRD	153
	L31SBD	TEE CL3000 CS(A105) SW	
	L31SBDD	TEE CL3000 CS(A105) SW REDUCING	
	L36SBDT	SOCKOLET CL3000 CS(A105) SW	
	L36SBDU	ELBOLET 3000 LB CS(A105) SW	
1-1/2 - 1-1/2	L56GA1H	WELDOLET SCH 80 CS(A105) BW	92
	L56GA1J	ELBOLET SCH 80 CS(A105) BW	92
	L56GA1K	LATROLET SCH 80 CS(A105) BW	92
2 - 2	L51NA1	TEE XS CS(A234-WPB) BW STRT	
	L51NA1D	TEE XS CS(A234-WPB) BW REDUCING	3
	L56NA1H	WELDOLET XS CS(A105) BW	
3 - 8	L56MA1H	WELDOLET STD WT CS(A105) BW	
3 - 28	L51MA1D	TEE STD WT CS(A234-WPB) BW REDUCING	3
3 - 30	L51MA1	TEE STD WT CS(A234-WPB) BW STRT	
		FLANGES	
3/4 - 1-1/2	L40BA3BN	FLANGE CL150 RF CS(A105) SW XS	
3/4 - 24	L43BA3	BLIND FLG CL150 RF CS(A105)	
1 - 2	L42FA3DNL	ORIF FLGS CL300 RF CS(A105) WN XS	
1-1/2 - 1-1/2	L40BA3DN	FLANGE CL150 RF CS(A105) WN XS	92
	L47BA1	LAP JOINT FLANGE CL150 CS(A105)	92
2 - 2	L40BA3DN	FLANGE CL150 RF CS(A105) WN XS	
	L40FA3DN	FLANGE CL300 RF CS(A105) WN XS	32,104
3 - 18	L42FA3DML	ORIF FLGS CL300 RF CS(A105) WN STD WT	17
3 - 24	L40BA3DM	FLANGE CL150 RF CS(A105) WN STD WT	
	L40FA3DM	FLANGE CL300 RF CS(A105) WN STD WT	32,104
28 - 30	L48BA3DM2	FLANGE CL150 RF CS(A105)WN STD B16.47 "B"	203
		MISCELLANEOUS	
3/4 - 12	L45BA3E	BLIND CL150 RF CS(A516-70) SPECTACLE	
14 - 12	L45BA3FZ	BLIND CL150 RF CS(A516-70) SPACER RING	
	L45BA3GZ	BLIND CL150 RF CS(A516-70) PLATE	

Size Inch	Item No.	Description	Note Nos.
		NIPPLES	
1/2 - 1/2	L34LAHJ	NIPPLE SMLS 160 CS(A106-B) TOE-POE	67
3/4 - 1-1/2	L34NAEJ	NIPPLE SMLS XS CS(A106-B) PE	
		BLOCK VALVES	
3/4 - 1-1/2	L20KA1HD	GATE CL800 SW CS(A105)API TR#8 13CR/HF BB RP	
2 - 10	L20BA3CD	GATE CL150 RF CS(A216-WCB)API TR#8 13CR/HF BB FP	
12 - 24	L20BA3CDF	GATE CL150 RF CS(A216-WCB)API TR#8 13CR/HF BB FP GO	
		THROTTLE VALVES	
3/4 - 1-1/2	L21KA1DE	GLOBE CL800 SW CS(A105)API TR#8 13CR/HF BB	21
2 - 8	L21BA3DE	GLOBE CL150 RF CS(A216-WCB)API TR#8 13CR/HF BB	21
		CHECK VALVES	
3/4 - 1-1/2	L22KA1REF	CHECK CL800 SW CS(A105)API TR#8 13CR/HF BC LIFT HORIZ	
2 - 24	L22BA3PE	CHECK CL150 RF CS(A216-WCB)API TR#8 13CR/HF BC SWING	
		OTHER VALVES	
1/2 - 1/2	L20KAXHDM	GATE CL800 MSW/FSW CS(A105) API TR#8 RP BB EXTD BODY	67
3/4 - 1-1/2	L20BA3HD	GATE CL150 RF CS(A216-WCB)API TR#8 13CR/HF BB RP	15
	L20KA1LD	GATE CL800 SW CS(A105)API TR#8 13CR/HF BB FP GRSE SL	120
	L20KAYHDM	GATE CL800 MSW/FNPT CS(A105)API TR#8 RP BB EXTD BODY	94
	L20KD1MDL	GATE CL800 SW CS(A105N)API TR#8 13CR/HF WB BELLOW SEAL	161
	L20KD7MDL	GATE CL800 SW/SCRD CS(A105N)API TR#8 WB BELLOW SEAL	161
	L21KD1JEL	GLOBE CL800 SW CS(A105N)API TR#8 WB BELLOW SEAL	21,161
2 - 12	L25BBJFF	BALL CL150 RF CS(A216-WCB)TF MOD H SEAT RP ORBIT	101
		BOLTS AND GASKETS	
3/4 - 24	L61BF1ZA	GASKET CL150 RF 304L/APX-2 GRAPHITE KAM STYLE	
	L61FF1ZA	GASKET CL300 RF 304L/APX-2 GRAPHITE KAM STYLE	104
	L620BM	STUD BOLT ASTM A193 B7 W/2 ASTM A194 2H NUTS	
28 - 30	L61BF1ZAZ	GASKET CL150 RF 304L/APX-2 GRAPHITE KAM STYLE B16.47-B	

Piping Item Notes:

3 BRANCH SIZE WALL THICKNESS ARE SHOWN FOR REDUCING TEES AND WELDOLETS. RUN SIZE WALL THICKNESS SHALL BE IN ACCORDANCE WITH THIS PIPE CLASS.
15 TO BE USED WHEN MATING TO FLANGED NOZZLES.
17 USE WELD NECK FLANGES AND THROAT TAPS NPS 20 AND LARGER
21 LIMITED TO THROTTLING SERVICES UP TO 150 PSI DIFFERENTIAL. FOR SERVICES WITH DIFFERENTIAL PRESSURES GREATER THAN 150 PSI, USE THE SIZING EQUATIONS IN ANSI/ISA-75.01.01 FOR DETERMINING SIZE AND STYLE AND REVIEW WITH CHEVRON CONTROL VALVE SME.
32 USE CLASS 300 RF FLANGES UP TO & INCLUDING FIRST BLOCK VALVE ON LIQUID LINES OFF LPG COLUMNS & VESSELS.
67 USE RESTRICTED TO ORIFICE FLANGE TAP CONNECTIONS. THREADED NIPPLES TO BE SEAL WELDED. NIPPLE LENGTHS SHALL BE IN ACCORDANCE WITH STANDARD DRAWING D-601407.
90 USE RESTRICTED TO HYDROSTATIC VENTS AND DRAINS. PLUG MUST BE SEAL WELDED.
92 USE RESTRICTED TO THERMOWELL ASSEMBLY ONLY.
94 USE RESTRICTED TO DRAINS, OPERATIONAL VENTS, AND INSTRUMENT CONNECTIONS.
96 THREADED CONNECTIONS ARE PERMITTED ONLY AT OUTLET OF VENT AND DRAIN VALVES, AT HYDROSTA CONNECTIONS, AT OUTLET OF INSTRUMENT TAKE-OFF VALVES, AND TO MATCH EQUIPMENT.
101 TO BE USED WHERE TIGHT SHUT-OFF IS REQUIRED.
104 USE CLASS 300 FLANGES WHEN MATING TO CONTROL VALVES AND EQUIPMENT.
120 USE ONLY IN DESIGNATED AREAS WHERE ODORS FROM STEM LEAKAGE WOULD BE INTOLERABLE AND IN RJ-601 CAT 1, 2, 3 & 4 SERVICES IF VOC CERTIFIED STANDARD VALVES ARE NOT AVAILABLE.
153 USE RESTRICTED TO NON-VALVED HYDROSTATIC VENTS. COMPLETE SEAL WELDING IS REQUIRED AND SHALL COVER ALL EXPOSED THREADS (SEE STD DWG. GD-L1057).
161 USE BELLOW SEAL GATE VALVES FOR ALL IN-KIND REPLACEMENT ONLY. INSTALL NEW BELLOW SEAL VALVES WHEN REQUIRED BY PROJECT FOR PERMIT PURPOSES.
202 ERW PIPE IS NOT ACCEPTABLE.
203 FLANGES AND GASKETS SHALL CONFORM TO ASME B16.47 SERIES B.

Services:

NON-CRS SVC W/H2S (RJ 601, CAT 2,3 &4)
HYDROCARBON MIXTURES WITH MODERATE H2S
INERT GAS
LPG AND LPG/HC WITH MODERATE H2S
NON-CORROSIVE SERVICES (RJ601 CATEGORIES 2, 3, & 4)
HYDROGEN
PRIMARY WASH & RE-PULP FILTRATE
PRIMARY WAX MIX
SOLVENT, WAXY OIL

Temp-PressLimits	Temp Deg F	PSIG Max	H2PART Maximum	Vacuum
	-20/100	285		FULL
	200	260		FULL
	300	230		FULL
	400	200		FULL
	450	185		FULL

EXCEPTIONS NONE
LIMITED BY FLANGES

Notes:

CHEVRON PRODUCTS COMPANY - REFINERY DEPARTMENT
RICHMOND REFINERY
PIPING CLASSIFICATION - AB1

FLANGE TYPE	150 RF	VALVE TRIM	API TR#8 (13CR/HF)
BRANCH TABLE	TABLE 1	CORR ALLOW	1/16"
CHG DIRECT	TABLE 1	DESIGN CODE	ASME B31.3
TEMP CONN	FLANGED	RADIOGRAPHY	5% RANDOM BUTT WELDS
SEAL WELDING	COMPLETE (SEE GEN NOTES)	STRESS RELIEF	NONE
PIPE MATERIAL		MAX HYDROTEST: 450 PSIG	

Revision Date: 3/7/07 Created on 1/14/2009 2:01:08PM

PIPING CLASSIFICATION - AB2

Size Inch	Item No.	Description	Note Nos.
		PIPE	
3/4 - 1-1/2	L11LA1B	PIPE SMLS160 CS(A106-B) PE	
2 - 2	L11NA2A	PIPE SMLS XS CS(A53-B) BFW	
3 - 24	L11MA2A	PIPE SMLS STD WT CS(A53-B) BFW	
		FITTINGS	
1/2 - 1/2	L370ABW	PLUG CS(A105) SCRD	67
3/4 - 1-1/2	L30VBDA	ELBOW CL6000 CS(A105) SW 45-DEG	
	L30VBDB	ELBOW CL6000 CS(A105) SW 90-DEG	
	L34VBDH	CPLG CL6000 CS(A105) SW	
	L35PBMQ	SWGE NIPPLE XXS CS(A234-WPB) BLE-TSE CONC	96
	L370ABW	PLUG CS(A105) SCRD	90,94
	L370AEW	PLUG CS(A105) PE	
	L37VBDX	CAP CL6000 CS(A105) SW	
	L55LA1VA	SWGE NIPPLE SCH160 CS(A234-WPB) BBE CONC	
2 - 2	L50NA1AC	ELBOW XS CS(A234-WPB) BW 45-DEG	
	L50NA1BC	ELBOW XS CS(A234-WPB) BW 90-DEG LR	
	L55NA1DA	REDUCER XS CS(A234-WPB) BW CONC	
	L55NA1DB	REDUCER XS CS(A234-WPD) BW ECC	
	L57NA1R	CAP XS CS(A234-WPB) BW	
3 - 24	L50MA1AC	ELBOW STD WT CS(A234-WPB) BW 45-DEG	
	L50MA1BC	ELBOW STD WT CS(A234-WPB) BW 90-DEG LR	
	L55MA1DA	REDUCER STD WT CS(A234-WPB) BW CONC	
	L55MA1DB	REDUCER STD WT CS(A234-WPB) BW ECC	
	L57MA1R	CAP STD WT CS(A234-WPB) BW	
		BRANCHES	
1/2 - 1/2	L31VBA	TEE CL6000 CS(A105) SCRD	67
3/4 - 3/4	L36VBAT	THREDOLET CL6000 CS(A105) SCRD	90
3/4 - 1-1/2	L31VBA	TEE CL6000 CS(A105) SCRD	153
	L31VBD	TEE CL6000 CS(A105) SW	
	L31VBDD	TEE CL6000 CS(A105) SW REDUCING	
	L36VBDT	SOCKOLET CL6000 CS(A105) SW	
	L36VBDU	ELBOLET CL6000 CS(A105) SW	
1-1/2 - 1-1/2	L56LA1H	WELDOLET SCH 160 CS(A105) BW	92
	L56LA1J	ELBOLET SCH160 CS(A105) BW	92
	L56LA1K	LATROLET SCH160 CS(A105) BW	92
2 - 2	L51NA1	TEE XS CS(A234-WPB) BW STRT	
	L51NA1D	TEE XS CS(A234-WPB) BW REDUCING	3
	L56GA1H	WELDOLET SCH 80 CS(A105) BW	
3 - 8	L56EA1H	WELDOLET SCH 40 CS(A105) BW	
3 - 20	L51MA1D	TEE STD WT CS(A234-WPB) BW REDUCING	3
3 - 24	L51MA1	TEE STD WT CS(A234-WPB) BW STRT	
		FLANGES	
3/4 - 1-1/2	L40BA3BL	FLANGE CL150 RF CS(A105) SW 160	
3/4 - 24	L43BA3	BLIND FLG CL150 RF CS(A105)	
1 - 1-1/2	L42FA3DLL	ORIF FLGS CL300 RF CS(A105) WN SCH160	
1-1/2 - 1-1/2	L40BA3DL	FLANGE CL150 RF CS(A105) WN SCH 160	92
	L47BA1	LAP JOINT FLANGE CL150 CS(A105)	92
2 - 2	L40BA3DN	FLANGE CL150 RF CS(A105) WN XS	
	L40FA3DN	FLANGE CL300 RF CS(A105) WN XS	32,104
	L42FA3DNL	ORIF FLGS CL300 RF CS(A105) WN XS	
3 - 18	L42FA3DML	ORIF FLGS CL300 RF CS(A105) WN STD WT	17
3 - 24	L40BA3DM	FLANGE CL150 RF CS(A105) WN STD WT	
	L40FA3DM	FLANGE CL300 RF CS(A105) WN STD WT	32,104
		MISCELLANEOUS	
3/4 - 12	L45BA3E	BLIND CL150 RF CS(A516-70) SPECTACLE	
14 - 24	L45BA3FZ	BLIND CL150 RF CS(A516-70) SPACER RING	
	L45BA3CZ	BLIND CL150 RF CS(A516-70) PLATE	

Size Inch	Item No.	Description	Note Nos.
		NIPPLES	
1/2 - 1/2	L34FA1HJ	NIPPLE SMLS XXS CS(A106-B) TOE-POE	67
3/4 - 1-1/2	L34LA1EJ	NIPPLE SMLS 160 CS(A106-B) PE	
		BLOCK VALVES	
3/4 - 1-1/2	L20KA1DD	GATE CL800 SW CS(A105)API TR#8 13CR/HF BB FP	
2 - 10	L20BA3DD	GATE CL150 RF CS(A216-WCB)API TR#8 13CR/HF BB FP	
12 - 24	L20BA3DDF	GATE CL150 RF CS(A216-WCB)API TR#8 13CR/HF BB FP GO	
		THROTTLE VALVES	
3/4 - 1-1/2	L21KA1DE	GLOBE CL800 SW CS(A105)API TR#8 13CR/HF BB	21
2 - 8	L21BA3DE	GLOBE CL150 RF CS(A216-WCB)API TR#8 13CR/HF BB	21
		CHECK VALVES	
3/4 - 1-1/2	L22KA1TEF	CHECK CL800 SW CS(A105)API TR#8 13CR/HF BC PISTON HORZ	
2 - 24	L22BA3PE	CHECK CL150 RF CS(A216-WCB)API TR#8 13CR/HF BC SWING	
		OTHER VALVES	
1/2 - 1/2	L20KAXHDM	GATE CL800 MSW/FSW CS(A105) API TR#8 RP BB EXTD BODY	67
3/4 - 1-1/2	L20BA3DD	GATE CL150 RF CS(A216-WCB)API TR#8 13CR/HF BB FP	15
	L20KAYHDM	GATE CL800 MSW/FNPT CS(A105)API TR#8 RP BB EXTD BODY	94
	L20KD1MDL	GATE CL800 SW CS(A105N)API TR#8 13CR/HF WB BELLOW SEAL	161
	L20KD7MDL	GATE CL800 SW/SCRD CS(A105N)API TR#8 WB BELLOW SEAL	161
	L21KD1JEL	GLOBE CL800 SW CS(A105N)API TR#8 WB BELLOW SEAL	21,161
2 - 12	L25BB3FF	BALL CL150 RF CS(A216-WCB)T7 MOD H SEAT RP ORBIT	101
		BOLTS AND GASKETS	
3/4 - 24	L61BF1ZA	GASKET CL150 RF 304L/APX-2 GRAPHITE KAM STYLE	
	L61FF1ZA	GASKET CL300 RF 304L/APX-2 GRAPHITE KAM STYLE	104
	L620BM	STUD BOLT ASTM A193 B7 W/2 ASTM A194 2H NUTS	

Piping Item Notes:

3 BRANCH SIZE WALL THICKNESS ARE SHOWN FOR REDUCING TEES AND WELDOLETS. RUN SIZE WALL THICKNESS SHALL BE IN ACCORDANCE WITH THIS PIPE CLASS.

17 USE WELD NECK FLANGES AND THROAT TAPS NPS 20 AND LARGER.

21 LIMITED TO THROTTLING SERVICES UP TO 150 PSI DIFFERENTIAL. FOR SERVICES WITH DIFFERENTIAL PRESSURES GREATER THAN 150 PSI, USE THE SIZING EQUATIONS IN ANSI/ISA-75.01.01 FOR DETERMININO SIZE AND STYLE AND REVIEW WITH CHEVRON CONTROL VALVE SME.

32 USE CLASS 300 RF FLANGES UP TO & INCLUDING FIRST BLOCK VALVE ON LIQUID LINES OFF LPG COLUMNS & VESSELS.

67 USE RESTRICTED TO ORIFICE FLANGE TAP CONNECTIONS. THREADED NIPPLES TO BE SEAL WELDED. NIPPLE LENOTHS SHALL BE IN ACCORDANCE WITH STANDARD DRAWING D-601407.

90 USE RESTRICTED TO HYDROSTATIC VENTS AND DRAINS. PLUG MUST BE SEAL WELDED.

92 USE RESTRICTED TO THERMOWELL ASSEMBLY ONLY.

94 USE RESTRICTED TO DRAINS, OPERATIONAL VENTS, AND INSTRUMENT CONNECTIONS.

96 THREADED CONNECTIONS ARE PERMITTED ONLY AT OUTLET OF VENT AND DRAIN VALVES, AT HYDROTA CONNECTIONS, AT OUTLET OF INSTRUMENT TAKE-OFF VALVES, AND TO MATCH EQUIPMENT.

101 TO BE USED WHERE TIGHT SHUT-OFF IS REQUIRED.

104 USE CLASS 300 FLANGES WHEN MATING TO CONTROL VALVES AND EQUIPMENT.

153 USE RESTRICTED TO NON-VALVED HYDROSTATIC VENTS. COMPLETE SEAL WELDING IS REQUIRED AND SHALL COVER ALL EXPOSED THREADS (SEE STD DWG. GD-L1057).

161 USE BELLOW SEAL GATE VALVES FOR ALL IN-KIND REPLACEMENT ONLY. INSTALL NEW BELLOW SEAL VALVES WHEN REQUIRED BY PROJECT FOR PERMIT PURPOSES.

Services

GENERAL SERVICES- MODERATE CORROSION
HYDROCARBONS WITH TRACE H2S
LPG AND LPG WITH TRACE H2S
LPG/HC MIXTURE WITH TRACE H2S

Temp-PressLimits	Temp Deg F	PSIG Max	H2PART Maximum	Vacuum
	-20/100	285		FULL
	200	260		FULL
	300	230		FULL
	400	200		FULL
	450	185		FULL

EXCEPTIONS NONE
LIMITED BY FLANGES

Notes:

CHEVRON PRODUCTS COMPANY - REFINERY DEPARTMENT
RICHMOND REFINERY
PIPING CLASSIFICATION - AB2

FLANGE TYPE	150 RF
BRANCH TABLE	TABLE I
CHG DIRECT	TABLE I
TEMP CONN	FLANGED
SEAL WELDING	COMPLETE (SEE GEN NOTES)
PIPE MATERIAL	

VALVE TRIM	AB1-TR#8 (13CR/HF)
CORR ALLOW	1/8"
DESIGN CODE	ASME B31.3
RADIOGRAPHY	5% RANDOM BUTT WELDS
STRESS RELIEF	NONE
MAX HYDROTEST: 450 psig	

Revision Date 3/7/07 Created on 1/21/2002 5:53:18 PM

PIPING CLASSIFICATION - AB4

Size Inch	Item No.	Description	Note Nos.
		PIPE	
3/4 - 1-1/2	L11LA1B	PIPE SMLS160 CS(A106-B) PE	
2 - 2	L11NA2A	PIPE SMLS XS CS(A53-B) BFW	
3 - 24	L11MA2A	PIPE SMLS STD WT CS(A53-B) BFW	
		FITTINGS	
1/2 - 1/2	L370ABW	PLUG CS(A105) SCRD	67
3/4 - 1-1/2	L30VBDA	ELBOW CL6000 CS(A105) SW 45-DEG	
	L30VBDB	ELBOW CL6000 CS(A105) SW 90-DEG	
	L34VBDH	CPLG CL6000 CS(A105) SW	
	L35PBMQ	SWGE NIPPLE XXS CS(A234-WPB) BLE-TSE CONC	96
	L370ABW	PLUG CS(A105) SCRD	90,94
	L370AEW	PLUG CS(A105) PE	
	L37VBDX	CAP CL6000 CS(A105) SW	
	L55LA1VA	SWGE NIPPLE SCH160 CS(A234-WPB) BBE CONC	
2 - 2	L50NA1AC	ELBOW XS CS(A234-WPB) BW 45-DEG	
	L50NA1BC	ELBOW XS CS(A234-WPB) BW 90-DEG LR	
	L55NA1DA	REDUCER XS CS(A234-WPB) BW CONC	
	L55NA1DB	REDUCER XS CS(A234-WPB) BW ECC	
	L57NA1R	CAP XS CS(A234-WPB) BW	
3 - 24	L50MA1AC	ELBOW STD WT CS(A234-WPB) BW 45-DEG	
	L50MA1BC	ELBOW STD WT CS(A234-WPB) BW 90-DEG LR	
	L55MA1DA	REDUCER STD WT CS(A234-WPB) BW CONC	
	L55MA1DB	REDUCER STD WT CS(A234-WPB) BW ECC	
	L57MA1R	CAP STD WT CS(A234-WPB) BW	
		BRANCHES	
1/2 - 1/2	L31VBA	TEE CL6000 CS(A105) SCRD	67
3/4 - 3/4	L36VBAT	THREDOLET CL6000 CS(A105) SCRD	90
3/4 - 1-1/2	L31VBA	TEE CL6000 CS(A105) SCRD	153
	L31VBD	TEE CL6000 CS(A105) SW	
	L31VBDD	TEE CL6000 CS(A105) SW REDUCING	
	L36VBDT	SOCKOLET CL6000 CS(A105) SW	
	L36VBDU	ELBOLET CL6000 CS(A105) SW	
1-1/2 - 1-1/2	L56LA1H	WELDOLET SCH 160 CS(A105) BW	92
	L56LA1J	ELBOLET SCH160 CS(A105) BW	92
	L56LA1K	LATROLET SCH160 CS(A105) BW	92
2 - 2	L51NA1	TEE XS CS(A234-WPB) BW STRT	
	L51NA1D	TEE XS CS(A234-WPB) BW REDUCING	3
	L56GA1H	WELDOLET SCH 80 CS(A105) BW	
3 - 8	L56EA1H	WELDOLET SCH 40 CS(A105) BW	
3 - 20	L51MA1D	TEE STD WT CS(A234-WPB) BW REDUCING	3
3 - 24	L51MA1	TEE STD WT CS(A234-WPB) BW STRT	
		FLANGES	
3/4 - 1-1/2	L40BA3BL	FLANGE CL150 RF CS(A105) SW 160	
3/4 - 24	L43BA3	BLIND FLG CL150 RF CS(A105)	
1 - 1-1/2	L42FA3DLL	ORIF FLGS CL300 RF CS(A105) WN SCH160	
1-1/2 - 1-1/2	L40BA3DL	FLANGE CL150 RF CS(A105) WN SCH 160	92
	L47BA1	LAP JOINT FLANGE CL150 CS(A105)	92
2 - 2	L40BA3DN	FLANGE CL150 RF CS(A105) WN XS	
	L40FA3DN	FLANGE CL300 RF CS(A105) WN XS	104
	L42FA3DNL	ORIF FLGS CL300 RF CS(A105) WN XS	
3 - 18	L42FA3DML	ORIF FLGS CL300 RF CS(A105) WN STD WT	17
3 - 24	L40BA3DM	FLANGE CL150 RF CS(A105) WN STD WT	
	L40FA3DM	FLANGE CL300 RF CS(A105) WN STD WT	104
		MISCELLANEOUS	
3/4 - 12	L45BA3E	BLIND CL150 RF CS(A516-70) SPECTACLE	
14 - 24	L45BA3FZ	BLIND CL150 RF CS(A516-70) SPACER RING	
	L45BA3GZ	BLIND CL150 RF CS(A516-70) PLATE	

Size Inch	Item No.	Description	Note Nos.
		NIPPLES	
1/2 - 1/2	L34PA1J	NIPPLE SMLS XXS CS(A106-B) TOE-POE	67
3/4 - 1-1/2	L34LAEJ	NIPPLE SMLS 160 CS(A106-B) PE	
		BLOCK VALVES	
3/4 - 1-1/2	L20KA1DT	GATE CL800 SW CS(A105)API TR#12 316SS/HF BB FP	
2 - 10	L20BA3CT	GATE CL150 RF CS(A216-WCB)API TR#12 316/HF BB FP	
12 - 24	L20BA3CTF	GATE CL150 RF CS(A216-WCB)API TR#12 316/HF BB FP GC	
		THROTTLE VALVES	
3/4 - 1-1/2	L21KA1DT	GLOBE CL800 SW CS(A105)API TR#12 316SS/HF BB	21
2 - 8	L21BA3DT	GLOBE CL150 RF CS(A216-WCB) API TR#12 316/HF BB	21
		CHECK VALVES	
3/4 - 1-1/2	L22KA1TTF	CHECK CL800 SW CS(A105) API TR#12 BC PISTON HORZ	
2 - 24	L22BA3PT	CHECK CL150 RF CS(A216-WCB) API TR#12 316/HF BC SWING	
		OTHER VALVES	
1/2 - 1/2	L20KAXDTM	GATE CL800 MSW/FSW CS(A105) API TR#12 FP BB EXTD BODY	67
3/4 - 1-1/2	L20BA3CT	GATE CL150 RF CS(A216-WCB)API TR#12 316/HF BB FP	15
	L20KAYDTM	GATE CL800 MSW/FNPT CS(A105) API TR#12 FP BB EXTD BODY	94
		BOLTS AND GASKETS	
3/4 - 24	L61BF1ZA	GASKET CL150 RF 304L/APX-2 GRAPHITE KAM STYLE	
	L61FF1ZA	GASKET CL300 RF 304L/APX-2 GRAPHITE KAM STYLE	104
	L620BM	STUD BOLT ASTM A193 B7 W/2 ASTM A194 2H NUTS	

Piping Item Notes:

3 BRANCH SIZE WALL THICKNESS ARE SHOWN FOR REDUCING TEES AND WELDOLETS. RUN SIZE WALL THICKNESS SHALL BE IN ACCORDANCE WITH THIS PIPE CLASS.

17 USE WELD NECK FLANGES AND THROAT TAPS NPS 20 AND LARGER.

21 LIMITED TO THROTTLING SERVICES UP TO 150 PSI DIFFERENTIAL. FOR SERVICES WITH DIFFERENTIAL PRESSURES GREATER THAN 150 PSI, USE THE SIZING EQUATIONS IN ANSI/ISA-75.01.01 FOR DETERMINING SIZE AND STYLE AND REVIEW WITH CHEVRON CONTROL VALVE SME.

67 USE RESTRICTED TO ORIFICE FLANGE TAP CONNECTIONS, THREADED NIPPLES TO BE SEAL WELDED. NIPPLE LENGTHS SHALL BE IN ACCORDANCE WITH STANDARD DRAWING D-601407.

90 USE RESTRICTED TO HYDROSTATIC VENTS AND DRAINS. PLUG MUST BE SEAL WELDED.

92 USE RESTRICTED TO THERMOWELL ASSEMBLY ONLY.

94 USE RESTRICTED TO DRAINS, OPERATIONAL VENTS, AND INSTRUMENT CONNECTIONS.

96 THREADED CONNECTIONS ARE PERMITTED ONLY AT OUTLET OF VENT AND DRAIN VALVES, AT HYDROTA CONNECTIONS, AT OUTLET OF INSTRUMENT TAKE-OFF VALVES, AND TO MATCH EQUIPMENT.

104 USE CLASS 300 FLANGES WHEN MATING TO CONTROL VALVES AND EQUIPMENT.

153 USE RESTRICTED TO NON-VALVED HYDROSTATIC VENTS. COMPLETE SEAL WELDING IS REQUIRED AND SHALL COVER ALL EXPOSED THREADS (SEE STD DWG. GD-L1057).

210 LIMIT VELOCITY TO 5 FPS MAX. GTAW ROOT PASS WELDING IS PREFERRED TO PREVENT TURBULANCE AND VELOCITY SENSITIVE CORROSION IN SOUR WATER, MEA AND DEA SERVICES. DO NOT USE SHORT RADIUS ELBOWS.

Services

CORROSIVE SERVICES - SPECIAL TRIM
FLARE GAS
MONOETHANOLAMINES (MEA) (OVER 5% AND LESS THAN 100F)
PROCESS GAS

Temp-PressLimits	Temp Deg F	PSIG Max	H2PART Maximum	Vacuum
	-20/100	285		FULL
	200	260		FULL
	300	230		FULL
	400	200		FULL
	450	185		FULL

EXCEPTIONS NONE
LIMITED BY FLANGES

Notes:

~~CHEVRON PRODUCTS COMPANY - REFINERY DEPARTMENT~~
RICHMOND REFINERY
PIPING CLASSIFICATION - AB4

FLANGE TYPE	150 RF	VALVE TRIM	~~API TR#12 (316SS/HF)~~
BRANCH TABLE	TABLE I	CORR ALLOW	1/8"
CHG DIRECT	TABLE I	DESIGN CODE	ASME B31.3
TEMP CONN	FLANGED	RADIOGRAPHY	5% RANDOM BUTT WELDS
SEAL WELDING	COMPLETE (SEE GEN NOTES)	STRESS RELIEF	NONE
PIPE MATERIAL		MAX HYDROTEST	450 PSIG

Revision Date 3/7/07 Created on 4/3/2009 2:23:26PM

PIPING CLASSIFICATION - TF1

Size Inch	Item No.	Description	Note Nos.
		PIPE	
3/4 - 1-1/2	L11NT1	PIPE SMLS XS 5CR(A335-P5) PE	
2 - 2	L11NT2	PIPE SMLS XS 5CR(A335-P5) BFW	
3 - 12	L11MT2	PIPE SMLS STD WT 5CR(A335-P5) BFW	
14 - 24	L11ET2	PIPE SMLS SCH 40 5CR(A335-P5) BFW	
		FITTINGS	
1/2 - 1/2	L370TBW	PLUG 5CR(A182-F5) SCRD	67
3/4 - 1-1/2	L30STDA	ELBOW CL3000 5CR(A182-F5) SW 45-DEG	
	L30STDB	ELBOW CL3000 5CR(A182-F5) SW 90-DEG	
	L34STDH	CPLG CL3000 5CR(A182-F5) SW	
	L35PTMQ	SWG NIPPLE XXS 5CR(A234-WP5) BLE-TSE CONC	96
	L370TBW	PLUG 5CR(A182-F5) SCRD	94
	L370TEW	PLUG 5CR(A182-F5) PE	
	L37STDX	CAP CL3000 5CR(A182-F5) SW	
	L55NT1VA	SWGE NIPPLE XS 5CR(A234-WP5) BBE CONC	
2 - 2	L50NT1AC	ELBOW XS 5CR(A234-WP5) BW 45-DEG	
	L50NT1BC	ELBOW XS 5CR(A234-WP5) BW 90-DEG LR	
	L55NT1DA	REDUCER XS 5CR(A234-WP5) BW CONC	
	L55NT1DB	REDUCER XS 5CR(A234-WP5) BW ECC	
	L57NT1R	CAP XS 5CR(A234-WP5) BW	
3 - 12	L50MT1AC	ELBOW STD WT 5CR(A234-WP5) BW 45-DEG	
	L50MT1BC	ELBOW STD WT 5CR(A234-WP5) BW 90-DEG LR	
	L55MT1DA	REDUCER STD WT 5CR(A234-WP5) BW CONC	
	L55MT1DB	REDUCER STD WT 5CR(A234-WP5) BW ECC	
	L57MT1R	CAP STD WT 5CR(A234-WP5) BW	
14 - 24	L50ET1AC	ELBOW SCH40 5CR(A234-WP5) BW 45-DEG	
	L50ET1BC	ELBOW SCH40 5CR(A234-WP5) BW 90-DEG LR	
	L55ET1DA	REDUCER SCH40 5CR(A234-WP5) BW CONC	
	L55ET1DB	REDUCER SCH40 5CR(A234-WP5) BW ECC	
	L57ET1R	CAP SCH40 5CR(A234-WP5) BW	
		BRANCHES	
1/2 - 1/2	L31VTA	TEE CL6000 5CR(A182-F5) SCRD	67
3/4 - 1-1/2	L31STA	TEE CL3000 5CR(A182-F5) SCRD	95
	L31STD	TEE CL3000 5CR(A182-F5) SW	
	L31STDD	TEE CL3000 5CR(A182-F5) SW REDUCING	
	L36STAT	THREDOLET CL3000 5CR(A182-F5) SCRD	95
	L36STDT	SOCKOLET CL3000 5CR(A182-F5) SW	
	L36STDU	ELBOLET CL3000 5CR(A182-F5) SW	
1-1/2 - 1-1/2	L56NT1H	WELDOLET XS 5CR(A182-F5) BW	92
	L56NT1J	ELBOLET XS 5CR(A182-F5) BW	92
	L56NT1K	LATROLET XS 5CR(A182-F5) BW	92
2 - 2	L51NT1	TEE XS 5CR(A234-WP5) BW STRT	
	L51NT1D	TEE XS 5CR(A234-WP5) BW REDUCING	3
	L56NT1H	WELDOLET XS 5CR(A182-F5) BW	
3 - 8	L56MT1H	WELDOLET STD WT 5CR(A182-F5) BW	
3 - 12	L51MT1	TEE STD WT 5CR(A234-WP5) BW STRT	
	L51MT1D	TEE STD WT 5CR(A234-WP5) BW REDUCING	3
14 - 20	L51ET1D	TEE SCH 40 5CR(A234-WP5) BW REDUCING	3
14 - 24	L51ET1	TEE SCH40 5CR(A234-WP5) BW STRT	
		FLANGES	
3/4 - 1-1/2	L40FT3BN	FLANGE CL300 RF 5CR(A182-F5) SW XS	
3/4 - 24	L43FT3	BLIND FLG CL300 RF 5CR(A182-F5)	
1 - 2	L42FT3DNL	ORIF FLGS CL300 RF 5CR(A182-F5) WN XS	
1-1/2 - 1-1/2	L40FT3DN	FLANGE CL300 RF 5CR(A182-F5) WN XS	92
	L47FA1	LAP JOINT FLANGE CL300 CS(A105)	92
2 - 2	L40FT3DN	FLANGE CL300 RF 5CR(A182-F5) WN XS	
3 - 12	L40FT3DM	FLANGE CL300 RF 5CR(A182-F5) WN STD WT	
	L42FT3DML	ORIF FLGS CL300 RF 5CR(A182-F5) WN STD WT	
14 - 18	L42FT3DEL	ORIF FLGS CL300 RF 5CR(A182-F5) WN 40	17
14 - 24	L40FT3DE	FLANGE CL300 RF 5CR(A182-F5) WN SCH 40	
		MISCELLANEOUS	
3/4 - 10	L45FT3E	BLIND CL300 RF 5CR(A387-5 CL2) SPECTACLE	
12 - 24	L45FT3FZ	BLIND CL300 RF 5CR(A387-5 CL2) SPCR RNG	
	L45FT3GZ	BLIND CL300 RF 5CR(A387-5 CL2) PLATE	

Size Inch	Item No.	Description	Note Nos.
		NIPPLES	
1/2 - 1/2	L34LTHJ	NIPPLE SMLS 160 5CR(A335-P5) TOE-POE	67
3/4 - 1-1/2	L34NTEJ	NIPPLE SMLS XS 5CR(A335-P5) PE	
		BLOCK VALVES	
3/4 - 1-1/2	L20KT1HD	GATE CL800 SW 5CR(A182-F5)API TR#8 13CR/HF BB RP	
2 - 10	L20FT3HD	GATE CL300 RF 5CR(A217-C5)API TR#8 13CR/HF BB RP	
12 - 24	L20FT3HDF	GATE CL300 RF 5CR(A217-C5)API TR#8 13CR/HF BB RP GO	
		THROTTLE VALVES	
3/4 - 1-1/2	L21KT1DE	GLOBE CL800 SW 5CR(A182-F5)API TR#8 13CR/HF BB	21
2 - 8	L21FT3DE	GLOBE CL300 RF 5CR(A217-C5)API TR#8 13CR/HF BB	21
		CHECK VALVES	
3/4 - 1-1/2	L22KT1TEF	CHECK CL800 SW 5CR(A182-F5)API TR#8 13CR/HF PISTN HORZ	
2 - 24	L22FT3PE	CHECK CL300 RF 5CR(A217-C5)API TR#8 13CR/HF SWING	
		OTHER VALVES	
1/2 - 1/2	L20KTXHDM	GATE CL800 MSW/FSW 5CR(A182-F5) API TR#8 RP BB EXT BDY	67
3/4 - 1-1/2	L20FT3HD	GATE CL300 RF 5CR(A217-C5)API TR#8 13CR/HF BB RP	15
	L20KTYHDM	GATE CL800 MSW/FNPT 5CR(A182-F5)API TR#8 RP BB EXT BDY	94
		BOLTS AND GASKETS	
3/4 - 24	L61FF1ZA	GASKET CL300 RF 304L/APX-2 GRAPHITE KAM STYLE	
	L620BM	STUD BOLT ASTM A193 B7 W/2 ASTM A194 2H NUTS	

Piping Item Notes:

3 BRANCH SIZE WALL THICKNESS ARE SHOWN FOR REDUCING TEES AND WELDOLETS. RUN SIZE WALL THICKNESS SHALL BE IN ACCORDANCE WITH THIS PIPE CLASS.

15 TO BE USED WHEN MATING TO FLANGED NOZZLES.

17 USE WELD NECK FLANGES AND THROAT TAPS NPS 20 AND LARGER.

21 LIMITED TO THROTTLING SERVICES UP TO 150 PSI DIFFERENTIAL. FOR SERVICES WITH DIFFERENTIAL PRESSURES GREATER THAN 150 PSI, USE THE SIZING EQUATIONS IN ANSI/ISA-75.01.01 FOR DETERMINING SIZE AND STYLE AND REVIEW WITH CHEVRON CONTROL VALVE SME.

67 USE RESTRICTED TO ORIFICE FLANGE TAP CONNECTIONS. THREADED NIPPLES TO BE SEAL WELDED. NIPPLE LENGTHS SHALL BE IN ACCORDANCE WITH STANDARD DRAWING D-601407.

92 USE RESTRICTED TO THERMOWELL ASSEMBLY ONLY.

94 USE RESTRICTED TO DRAINS, OPERATIONAL VENTS, AND INSTRUMENT CONNECTIONS.

95 USE RESTRICTED TO HYDROSTATIC VENTS AND DRAINS. PLUG MUST BE SEAL WELDED AND STRESS RELIEVED.

96 THREADED CONNECTIONS ARE PERMITTED ONLY AT OUTLET OF VENT AND DRAIN VALVES, AT HYDROSTA CONNECTIONS, AT OUTLET OF INSTRUMENT TAKE-OFF VALVES, AND TO MATCH EQUIPMENT.

Services

SULFIDES, HC
HYDROCARBONS
SULFIDES (CORROSIVE)

Temp-PressLimits	Temp Deg F	PSIG Max	HZPART Maximum	Vacuum
	-20/200	750		FULL
	300	730		FULL
	400	705		FULL
	500	665		FULL
	600	605		FULL
	700	570		FULL
	750	530		FULL
	800	510		FULL

EXCEPTIONS NONE
LIMITED BY FLANGES

Notes:

CHEVRON PRODUCTS COMPANY - REFINERY DEPARTMENT
RICHMOND REFINERY
PIPING CLASSIFICATION - TF1

FLANGE TYPE	300 RF	VALVE TRIM	API TR#8 (13CR/HF)
BRANCH TABLE	TABLE I	CORR ALLOW	1/16"
CHG DIRECT	TABLE I	DESIGN CODE	ASME B31.3
TEMP CONN	FLANGED	RADIOGRAPHY	100% BUTT WELDS
SEAL WELDING	COMPLETE (SEE GEN NOTES)	STRESS RELIEF	ALL SIZES
PIPE MATERIAL		MAX HYDROTEST	

Revision Date 4/10/07 Created on 4/27/2009 1:28:09PM

Self-Cured Inorganic Zinc | Polyamide Epoxy (High Build) | Aliphatic Polyurethane — 3.1

Surface Prep: SSPC-SP6 (NACE No. 3) Commercial blast finish.

Anchor Pattern: 1.5 - 2.5 mils

Total DFT: 9.0 mils (min)

Touch Up: Coating System (CS) 3.5. After applying the tie-coat: (Repair any damage exposing bare metal with CS 3.5. Repair any damage to the inorganic zinc primer, as necessary, with CS 3.5 to maintain specified film thickness.).

Coat, Generic Classification, DFT	Manufacturer	Product Designation	VOC (G/L)	By Max Svc Temp
PRIMER	Ameron	Dimetcote 9	491	
Self-Cured Inorganic Zinc - Solvent Reducible	Ameron	Dimetcote 9HS	323	
	Carboline	Carbozinc 11	515	
	Carboline	Carbozinc 11 HS	264	
	Devoe	Catha-Coat 304V	336	
2.0 - 3.0 mils DFT	Hempel Coatings (USA), Inc.	Galvosil 1568	320	
	Hempel Coatings (USA), Inc.	Galvosil 1578	520	
	International	Interzinc 22	490	
	International	Interzinc 22HS	340	
	Jotun Paints	Resist 78	465	
	PPG Industries	Metalhide 1001 Primer 97-673/97-674	397	
	Sherwin Williams	Zinc Clad II B69V3/B69D11	462	
	Sherwin Williams	Zinc Clad II HS B69VZ1/B69VZ3/B69D11	312	
	Sigma Coatings	SigmaZinc 158	507	
	Keep inorganic zinc silicate mixed, using agitated pot while applying.			
TIECOAT	Ameron	Amercoat 385	276	
Epoxy - Polyamide	Carboline	Carboguard 893	195	
High Build	Devoe	Devran 224HS	212	
5.0 - 7.0 mils DFT	Hempel Coatings (USA), Inc.	Hempadur 4520	400	
	Hempel Coatings (USA), Inc.	Hempadur 45880	215	
	International	Intergard 475 HS	175	
	Jotun Paints	Penguard Tiecoat 100	480	
	PPG Industries	97-148	0	
	Sherwin Williams	Macropoxy 646 B58-600 Series/B68V600	235	
	Sigma Coatings	SigmaCover 435	344	
TOPCOAT	Ameron	Amercoat 450 Series	335	
Polyurethane - Aliphatic	Carboline	Carbothane 134 HG	288	
	Devoe	Devthane 379	311	
	Hempel Coatings (USA), Inc.	5595U	312	
2.0 - 3.0 mils DFT	Hempel Coatings (USA), Inc.	Hempathane 5595	332	
	International	Interthane 990	395	
	International	Interthane 990HS	332	
	Jotun Paints	Hardtop HB	256	
	PPG Industries	95-8512	0	
	Sherwin Williams	Hi-Solids Polyurethane B65-300 SeriesB65/	289	
	Sigma Coatings	Sigmadur 500 US	320	
	Respirators are strongly recommended when applying polyurethane.			

Volatile Organic Compound (VOC) limit may vary by location. Check local standards for current VOC limits. Consult manufacturer's product data sheets for specific details about applying any coating.

CUSA-CSB-0019070
EPA

Under Insulation - Non-Reinforced Thin Film Epoxy Coatings for Continuous or Cyclic Carbon Steel Temperatures -50°F to 450°F

12.1

Surface Prep: SSPC-SP10 (NACE No. 2) Near-white blast finish.

Touch Up: Use material from manufacturer.

Anchor Pattern: 2.0 - 3.0 mils

Total DFT: 10.0 mils (min)

Coat, Generic Classification, DFT	Manufacturer	Product Designation	VOC (G/L)	By Max Svc Temp
PRIMER	Ameron	Amercoat 90HS w/880 Additive	323	400°F
Epoxy - Phenolic	Carboline	Thermoline 450	255	425°F
Nonreinforced Thin Film	Dampney Company, Inc.	Thurmalox 218	263	450°F
5.0 - 7.0 mils DFT	Devoe	HT-403	217	400°F
	Hempel Coatings (USA), Inc.	Hempadur 85671	335	500°F
	International	Intertherm 228	326	446°F
	PPG Industries	97-946	262	400°F
	Sherwin Williams	Epo-Phen B62A55/B62V55	264	300°F
	Sigma Coatings	SigmaCover 435	344	390°F
	These coatings contain epoxy and epoxy phenolic resins.			
TOPCOAT	Ameron	Amercoat 90HS w/880 Additive	323	400°F
Epoxy - Phenolic	Carboline	Thermoline 450	255	425°F
Nonreinforced Thin Film	Dampney Company, Inc.	Thurmalox 219	312	450°F
5.0 - 7.0 mils DFT	Devoe	HT-403	217	400°F
	Hempel Coatings (USA), Inc.	Hempadur 85671	335	500°F
	International	Intertherm 228	326	446°F
	PPG Industries	97-946	262	400°F
	Sherwin Williams	Epo-Phen B62A55/B62V55	264	300°F
	Sigma Coatings	SigmaCover 435	344	390°F
	These coatings contain epoxy and epoxy phenolic resins.			

Volatile Organic Compound (VOC) limit may vary by location. Check local standards for current VOC limits. Consult manufacturer's product data sheets for specific details about applying any coating.

CUSA-CSB-0019071
EPA

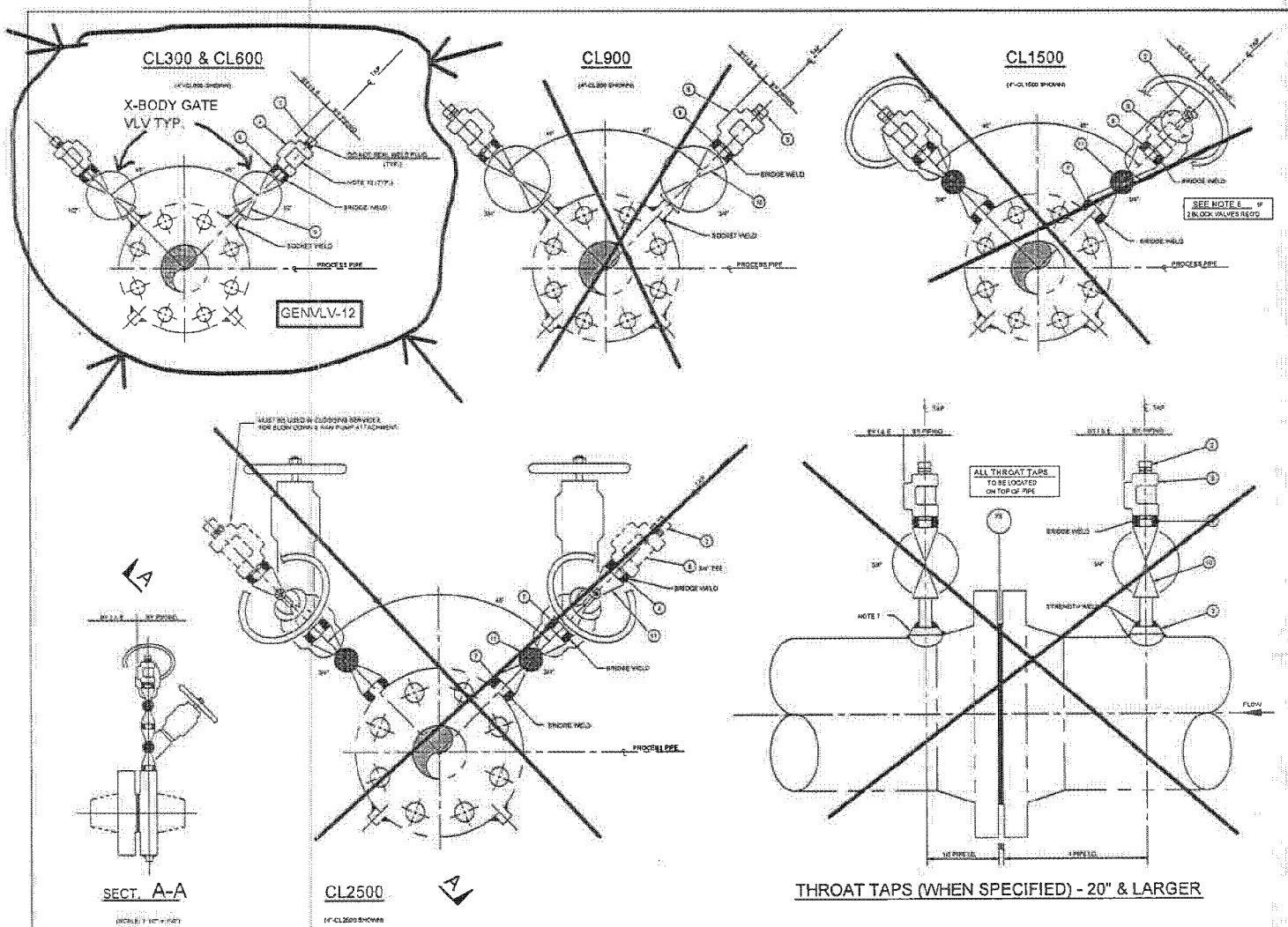

MATERIAL LIST

MK	Size	Description	
1	1/2"	PLUG, SOCK	PER PIPE MAT'L SPEC
2	3/4"	PLUG, SOCK	PER PIPE MAT'L SPEC
3	3/4"	SOCKOLET	PER PIPE MAT'L SPEC
4	3/4"	TEE, SOCK	PER PIPE MAT'L SPEC
5	3/4"	TEE, SOCK	PER PIPE MAT'L SPEC
6	1/2" x 1 1/2"	PIPE NIPPLE (TBE/PBE)	PER PIPE MAT'L SPEC
7	3/4" x 1 1/2"	PIPE NIPPLE (PE)	PER PIPE MAT'L SPEC
8	3/4" x 1 1/2"	PIPE NIPPLE (TBE/PBE)	PER PIPE MAT'L SPEC
9	1/2"	EXT BODY VALVE, MBRN X FBW	PER PIPE MAT'L SPEC
10	3/4"	EXT BODY VALVE, MBRN FBW	PER PIPE MAT'L SPEC
11	3/4"	FLANGE VALVE, BW	PER PIPE MAT'L SPEC

NOTES

1. FOR EACH SPECIFIC INSTALLATION, THE PIPING I & E INTERFACE TEES MUST BE INSTALLED AT EXACTLY THE SAME ELEVATION.
2. FOR EACH SPECIFIC INSTALLATION, BOTH TAPS MUST BE INSTALLED AT THE SAME ANGLE OFF THE VERT. CENTERLINE.
3. TAP ORIENTATION (VERT. UP OR VERT. DOWN) DETERMINED BY SERVICE; PIPING DESIGN DWG'S TO SPECIFY ORIENTATION. ALSO SEE STD DWG. D-600700, & D-600701 FOR INSTRUMENT CONN. CONSTRUCTION DETAILS.
4. SEE DWG. D8-L-0687 FOR ADDITIONAL ORIFICE PLG. ASSEMBLY DETAILS.
5. FOUR BOLT FLGS TO BE INSTALLED WITH BOLT HOLES ON VERT. & HORIZ. CENTERLINE.
6. THREE BOLT FLGS TO BE INSTALLED WITH ORIFICE TAPS 30° OFF VERT. CENTERLINE UNLESS OTHERWISE SPECIFIED ON PIPING DESIGN DWG'S.
7. IF THROAT TAP SOCKOLET FAILS ON FLG. TO PIPE WELD, WELD MUST BE GROUND FLUSH WITH PIPE (INSIDE AND OUTSIDE) PRIOR TO INSTALLATION OF SOCKOLET.
8. IN THE CL1500 LINE CLASSES, SOME PLANTS / SERVICES REQUIRE DOUBLE BLOCK VALVES. SEE ENGINEER FOR SPECIFIC DIRECTIONS FOR DETAILS OF DOUBLE BLOCK VALVE INSTALLATIONS. SEE CL1500 ASSEMBLY AT LEFT.
9. BRIDGE WELD(S) (FOR REQ'D ADDITIONAL STRENGTH) IS EXTREMELY CRITICAL IN VIBRATING SERVICES.
10. TUBING FITTINGS TO BE INSTALLED TO SLOPE EITHER DIRECTION ALONG THE PIPE.

THIS IS AN AUTOCAD DRAWING. DO NOT REVISE MANUALLY.

REFERENCE DRAWINGS

STANDARD ORIFICE FLANGE ASSEMBLIES	D8-L-0687
HIGH PRESS. STRAINERS VENTS & DRAINS	D-600706
FLOW INSTRUMENT INSTALLATION DETAILS	D-600700-2
FLOW INSTRUMENT INSTALLATION DETAILS	D-600700-5

REVISIONS

1	CHANGED GATE VALVES TO EXTENDED BODY WALE SOCKET WELD X FEMALE SOCKET WELD AND GLOBE VALVES TO SOCKET WELD.	06-30-97	
2	CHANGED THROAT TAPS SIZE FROM 12" TO 20" AND ITEMS 6 & 7 FROM 2" TO 1 1/2".	07-17-97	JAH / DMW
3	DELETED PIPE NIPPLE BOM FROM MATERIAL LIST. REMOVED NOTE 8 AND ADJUSTED REMAINING NOTE NUMBERS.	07-24-98	KDK / DMW

Chevron
Richmond Refinery

DETAILS
ORIFICE TAP ASSEMBLIES
RICHMOND STANDARD DRAWINGS-DESIGN
TECHNICAL DIVISION

L | W.O. | B.O. | D-601407-3

MARK-UP

CUSA-CSB-0019072
EPA