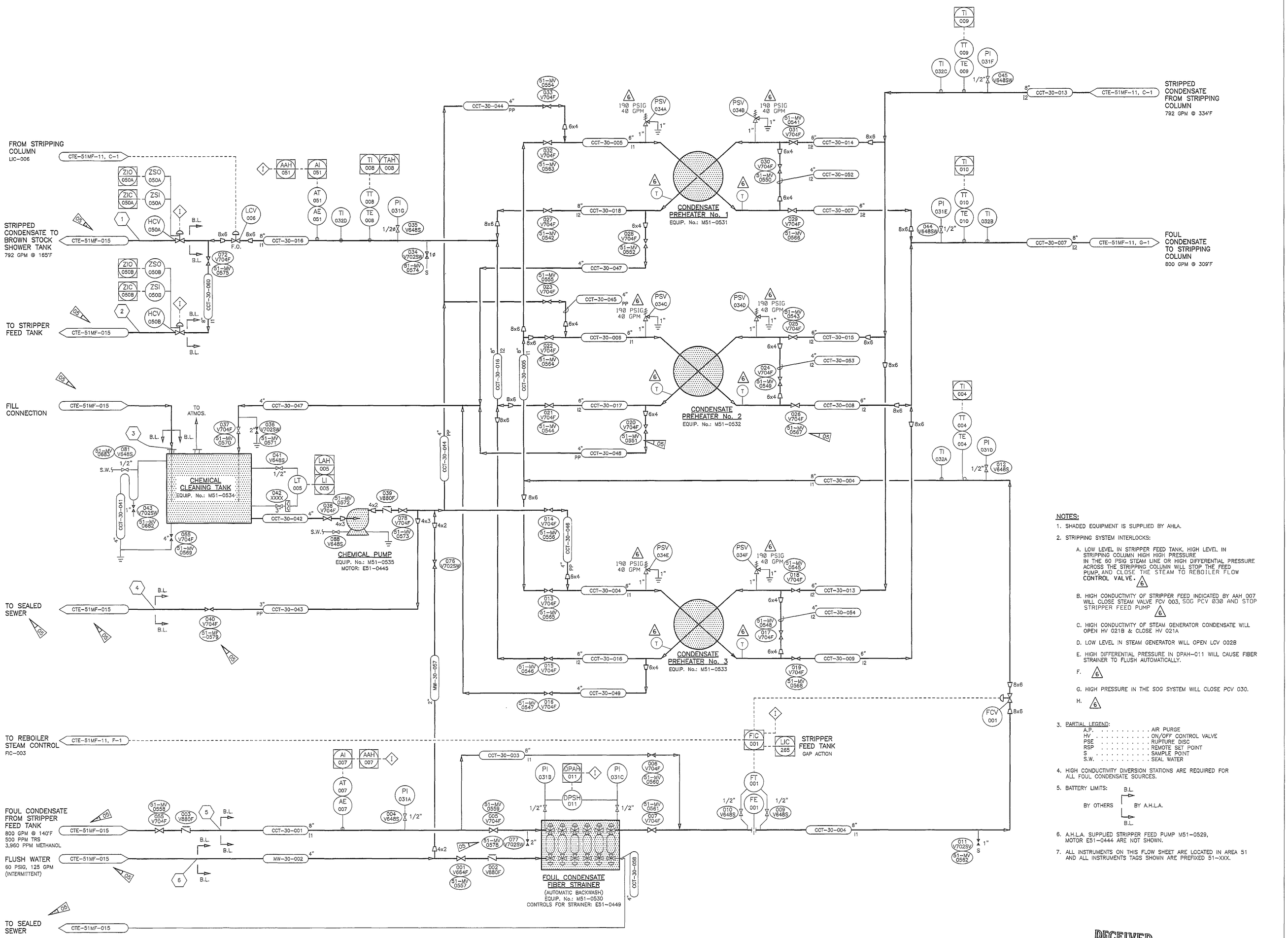


NOTES

**NOTES:**

1. SHADED EQUIPMENT IS SUPPLIED BY AHLA.
2. STRIPPING SYSTEM INTERLOCKS:
   A. LOW LEVEL IN STRIPPER FEED TANK, HIGH LEVEL IN STRIPPING COLUMN HIGH HIGH PRESSURE IN THE 60 PSIG STEAM LINE OR HIGH DIFFERENTIAL PRESSURE ACROSS THE STRIPPING COLUMN WILL STOP THE FEED PUMP, AND CLOSE THE STEAM TO REBOILER FLOW CONTROL VALVE. (6)
   B. HIGH CONDUCTIVITY OF STRIPPER FEED INDICATED BY AAH 007 WILL CLOSE STEAM VALVE FCV 003, SOG PCV 030 AND STOP STRIPPER FEED PUMP (6)
   C. HIGH CONDUCTIVITY OF STEAM GENERATOR CONDENSATE WILL OPEN HV 021B & CLOSE HV 021A
   D. LOW LEVEL IN STEAM GENERATOR WILL OPEN LCV 002B
   E. HIGH DIFFERENTIAL PRESSURE IN DPAH-011 WILL CAUSE FIBER STRAINER TO FLUSH AUTOMATICALLY.
   F. (6)
   G. HIGH PRESSURE IN THE SOG SYSTEM WILL CLOSE PCV 030.
   H. (6)
3. PARTIAL LEGEND:
   A.P. . . . . AIR PURGE
   HV . . . . . ON/OFF CONTROL VALVE
   PSE . . . . . RUPTURE DISC
   RSP . . . . . REMOTE SET POINT
   S . . . . . SAMPLE POINT
   S.W. . . . . SEAL WATER
4. HIGH CONDUCTIVITY DIVERSION STATIONS ARE REQUIRED FOR ALL FOUL CONDENSATE SOURCES.
5. BATTERY LIMITS: B.L. BY OTHERS B.L. BY A.H.L.A.
6. A.H.L.A. SUPPLIED STRIPPER FEED PUMP M51-0529, MOTOR E51-0444 ARE NOT SHOWN.
7. ALL INSTRUMENTS ON THIS FLOW SHEET ARE LOCATED IN AREA 51 AND ALL INSTRUMENTS TAGS SHOWN ARE PREFIXED 51-XXX.

| REV. NO. | CIRCLES | REV. BY | DATE | DESCRIPTION | CHECKED BY | DATE |
|---|---|---|---|---|---|---|
| 6 | LSJ | | 03/21/06 | GENERAL REVISIONS | KHM | |
| 05 | | DJ | 12/3/01 | REVISED AS BUILT | | |
| 04 | | GS | 10/18/00 | ADD TIE-IN 3; LAH003 WAS LAHH; LIC265 WAS LIC-002 . REVISED NOTES. | ALS | 10/20/00 |
| 03 | | EH | 8/7/00 | ADDED DUAL VALVE No.s', LAH-005, AE-051, HCV-050A, HV-050B & 51 MV-0558 | ALS | 8/10/00 |
| 02 | | AAM | 5/24/00 | REVISED LINE & VALVE NUMBERS TO MEET CUSTOMER REQUIREMENTS ADDED BOWATER DWG. NO. | JLS | 5/24/00 |
| 01 | | AT | 4/07/00 | ADDED EQ. NO'S. & INTERLOCK TO FIC-001 REVISED INSTRUMENT NO'S & LINE NO'S. ADDED VALVE NO'S & AE 007 | ALS | 4/25/00 |

NOTE: CIRCLE ALL REVISIONS, IDENTIFY WITH DIAMOND, NUMBER AND ARROW. REMOVE ONLY CIRCLE AND ARROW BEFORE NEXT REVISION.

| ISSUE CODE | | | | | |
|---|---|---|---|---|---|
| A | PRELIMINARY | C | MAT'L T.O. | F | CONST'N |
| B | DESIGN | D | MAT'L PURC. | G | |
| | | E | BIDS | | |

SEAL

SIGNATURE

DATE

**A.H. LUNDBERG ASSOCIATES, INC.**
P.O. Box 597 Bellevue, Washington 98009

| SPEC. NO. | PURCHASE ORDER NO. | DRAWING NO. | SHT. | REV. |
|---|---|---|---|---|
| ODOR 0.04 | SV-155414-JP | RL-995228-01 | 1/3 | 05 |

DWN. BY/DATE: AAM 2/28/00
CHK. BY/DATE: BWB 3/01/00
APP. BY/DATE: JLS 3/02/00
SCALE: NONE

BOWATER
COATED PAPER & PULP DIV.
P.O. Box 7, Catawba, South Carolina 29704

DRAWING TITLE
FOUL CONDENSATE STRIPPING SYSTEM P&ID

DRAWING NUMBER
CTE-51MF-10

RECEIVED
MAR 2 3 2006
BOWATER CAROLINA ENGINEERING

CADFILE: 51MF-10.DGN
51MF-10.CIT

THIS DRAWING IS THE PROPERTY OF A.H. LUNDBERG ASSOCIATES AND IS TO BE RETURNED UPON REQUEST. IT IS LOANED UPON CONDITION THAT IT WILL NOT BE REPRODUCED IN WHOLE OR IN PART, OR USED TO FURNISH INFORMATION TO OTHERS, OR FOR ANY PURPOSE OTHER THAN WORK AUTHORIZED BY A.H. LUNDBERG ASSOCIATES.

RL-995228-01 SHT. 1/3