SERO

COMMONWEALTH OF PENNSYLVANIA
Department of Environmental Protection
SERO, Norristown PA

28 August 2012

SUBJECT: CME Transmittal
Sunoco Land Treatment Unit
City of Philadelphia, Philadelphia County, PA
ID No. PAD002289700

TO: Renee Bartholomew
Chief - Enforcement & Information Section
Division of Hazardous Waste Management
Rachel Carson State Office Building
Harrisburg, PA 17105-2063

THRU: Mohamad Mazid, P.E.
Chief, Engineering Services Section
Waste Management Program/SERO

FROM: Jennifer A. Wilson, P.G.
Licensed Professional Geologist
Waste Management Program/SERO

Enclosed are CME worksheets along with the supporting documentation associated with the CME inspection and groundwater evaluation conducted on October 11th, 2011, for the subject Sunoco Land Treatment Unit located in the City of Philadelphia, Pennsylvania.

Please review and forward on to EPA to satisfy the grant commitment for conducting this evaluation this RCRA fiscal year.

File

Inspection ID 2095133

2610-FM-BWM0179 Rev. 7/2006

COMMONWEALTH OF PENNSYLVANIA
DEPARTMENT OF ENVIRONMENTAL PROTECTION
BUREAU OF WASTE MANAGEMENT

RCRAInfo CM&E EVALUATION – VIOLATION FORM

*EPA ID Number	PAD 002289700	EIN	
Handler Name	Sunoco Land Treatment Unit		
Street	3144 Passyunk Avenue		
City	Philadelphia	State: PA	Zip Code: 19145

Actual Generator Status (Check only if different from Notified Status): LQG ☐ SQG ☐ CESQG ☐ Closed ☒ Non-Handler ☐

Universe Change Required? (Generator Status Change Required): YES ☐ NO ☒ If YES, complete the Universe Change Section (on reverse side of this form).

RCRA Non-Notifier? YES ☐ NO ☒ If YES, complete the Handler Section (on reverse side of this form).

Other Facility Information Changes? YES ☐ NO ☒ If YES, complete the Handler Section (on reverse side of this form).

***EVALUATION** ☐ Add ☒ Update ☐ Delete — *You must provide an Evaluation Identifier (also known as the Sequence Number).*

*Evaluation Identifier	*Type	*Evaluation Start Date (mm/dd/yy)	*Agency	Responsible Person	Suborganization
U	CME	10/20/2011	S	PA-JAW	WM

Day Zero (mm/dd/yyyy): *You need to specify Day Zero for all evaluation types except CDI, CSE, FUI, SNY, and SNN, otherwise it defaults to Evaluation Start Date. For CDI, CSE, FUI, and SNY evaluations, you must select a previous CEI Start Date for the Day Zero. SNN evaluation type does not require a Day Zero.* 10/20/2011

Reclassified SV Date: *Only applicable for SNY evaluation type as appropriate.*

Notes:

Evaluation Indicator Field (Check all that apply)

☐ Citizen Complaint ☐ Multimedia Inspection ☒ Sampling ☐ Not Subtitle C

Focused Coverage Areas (Use Only for Evaluation Type FCI)

Regulation-Specific FCI

BIF ☐ CCI ☐ CFI ☐ INC ☐ LDR ☐ PTB ☐ PTX ☐
THI ☐ UIC ☐ UOI ☐ UWR ☐ OTHER (specify): _____

Routine/Standardized FCI

CAR ☐ CPC ☐ DOS ☐ EMR ☐ IEI ☐ ISI ☐ RTI ☐

Does this Evaluation Add/Update/Delete a Violation?	YES ☐ NO ☒	*If Yes, fill in the Violations Section(s) on page 2 of this form.*
Does this Evaluation link to a Commitment?	YES ☐ NO ☒	*If Yes, please use the RCRAInfo 3007 Information Requests and Commitments Form.*
Does this Evaluation link to a 3007 Request?	YES ☐ NO ☒	*If Yes, please use the RCRAInfo 3007 Information Requests and Commitments Form.*

OUTSTANDING VIOLATIONS COVERED BY ABOVE EVALUATION? YES ☐ NO ☒ *If Yes, fill in information below.*

*Seq. No.	*Violation Type	*Agency	*Regulation Citation (Type + Citation) (ex. FR 262.1)	*Date Determined (mm/dd/yyyy)

*Required Fields

RCRAInfo CM&E EVALUATION – VIOLATION FORM

EPA ID Number	Handler Name

VIOLATIONS SECTION
(Additional Violations can be added/updated/deleted using the RCRAInfo CM&E Additional Violations Form)

VIOLATION ☐ Add ☐ Update ☐ Delete — **Link to Above Evaluation** ☐

Seq. No	*Violation Type*	*Agency*	*Determined Date (mm/dd/yyyy)*	*Return to Compliance (RTC) Qualifier*	*Actual RTC Date (mm/dd/yyyy)*
				☐ *A RTC Qualifier is required if entering an Actual RTC Date.*	

Notes:

LINK CITATIONS TO ABOVE VIOLATION? YES ☐ NO ☐ — ***If Yes, fill in information below***

Citation Type	*Citation*	*Citation Type*	*Citation*

VIOLATION ☐ Add ☐ Update ☐ Delete — **Link to Above Evaluation** ☐

Seq. No	*Violation Type*	*Agency*	*Determined Date (mm/dd/yyyy)*	*Return to Compliance (RTC) Qualifier*	*Actual RTC Date (mm/dd/yyyy)*
				☐ *A RTC Qualifier is required if entering an Actual RTC Date.*	

Notes:

LINK CITATIONS TO ABOVE VIOLATION? YES ☐ NO ☐ — ***If Yes, fill in information below***

Citation Type	*Citation*	*Citation Type*	*Citation*

HANDLER SECTION ***(Fill out if RCRA Non-Notifier)***

Handler Name		**Contact**			
Street					
City		**State**		**Zip Code**	
County					

UNIVERSE CHANGE SECTION ***(Fill out if Universe Change Required)***

i. Indicate the Facility's current Universe(s):

ii. Indicate the new RCRAInfo Generator Universe:
Note: All TSD activity changes must be handled by the IOR and cannot be made using this form.

LQG ☐ SQG ☐ CEG ☐
Non-Handler ☐ Closed ☐

iii. Indicate the new transporter status:
(Only fill out if the facility requires a transporter status change)

Transporter ☐
If the transporter box is checked, you must check at least one mode of transportation below.
☐ Air ☐ Water
☐ Rail ☐ Other
☐ Highway

Non-Transporter ☐
Check non-transporter if the facility is currently listed in RCRAInfo as a transporter AND no longer transports hazardous waste.

*Required Fields

APPENDIX A

COMPREHENSIVE GROUND-WATER MONITORING EVALUATION WORKSHEET

The following worksheets have been designed to assist the enforcement officer/ technical reviewer in evaluating theground-water monitoring system an owner/operator uses to collect and analyze samples of ground water. The focus of the worksheets is technical adequacy as it relates to obtaining and analyzing representative samples of ground water. The basis of the worksheets is the final RCRA Ground Water Monitoring Technical Enforcement Guidance Document which describes in detail the aspects of ground-water monitoring which EPA deems essential to meet the goals of RCRA. Appendix A is not a regulatory checklist. Specific technical deficiencies in the monitoring system can, however, be related to the regulations as illustrated in Figure 4.3 taken from the RCRA Ground-Water Monitoring Compliance Order Guide (COG) (included at the end of the appendix). The enforcement officer, in developing an enforcement order, should relate the technical assessment from the worksheets to the regulations using Figure 4.3 from the COG as a guide.

Comprehensive Ground-Water Monitoring Evaluation	Y/N
I. Office Evaluation Technical Evaluation of the Design of the Ground-Water Monitoring System	
A. Review of Relevant Documents	
1. What documents were obtained prior to conducting the inspection:	
a. RCRA Part A permit application?	N
b. RCRA Part B permit application?	Y
c. Correspondence between the owner/operator and appropriate agencies or citizen's groups?	Y
d. Previously conducted facility inspection reports?	Y
e. Facility's contractor reports?	Y
f. Regional hydrogeologic, geologic, or soil reports?	Y
g. The facility's Sampling and Analysis Plan?	Y
h. Ground-water Assessment Program Outline (or Plan, if thefacility is in assessment monitoring)?	Y
i. Other (specify) Groundwater quality monitoring reports	Y

	Y/N
B. Evaluation of the Owner/Operator's Hydrogeologic Assessment	
1. Did the owner/operator use the following direct techniques in the hydrogeologic assessment:	
a. Logs of the soil borings/rock corings (documented by a professional geologist, soil scientist, or geotechnical engineer)?	Y
b. Materials tests (e.g., grain size analyses, standard penetration tests, etc.)?	N
c. Piezometer installation for water level measurments at different depths?d. Slug tests?	Y
e. Pump tests?	Y
f. Geochemical analyses of soil samples?	N
g. Other (specify) (e.g., hydrochemical diagrams and wash analysis)	N
2. Did the owner/operator use the following indirect technique to supplement direct techniques data:	
a. Geophysical well logs?	N
b. Tracer studies?	
c. Resistivity and/or electromagnetic conductance?	
d. Seismic Survey?	
e. Hydraulic conductivity measurements of cores?	
f. Aerial photography?	
g. Ground penetrating radar?	
h. Other (specify)	
3. Did the owner/operator document and present the raw data from the site hydrogeologic assessment?	Y
4. Did the owner/operator document methods (criteria) used to correlate and analyze the information?	N
5. The owner/operator prepare the following:	
a. Narrative description of geology?	Y
b. Geologic cross sections?	Y
c. Geologic and soil maps?	N
d. Boring/coring logs?	Y
e. Structure contour maps of the differing water bearing zones and confining layer?	N
f. Narrative description and calculation of ground-water flows?	N

	Y/N
g. Water table/potentiometric map?	Y
h. Hydrologic cross sections?	Y
6. Did the owner/operator obtain a regional map of the area and delineate the facility?	Y
If yes, does this map illustrate: a. Surficial geology features?	Y
b. Streams, rivers, lakes, or wetlands near the facility?	Y
c. Discharging or recharging wells near the facility?	N
7. Did the owner/operator obtain a regional hydrogeologic map?	Y
If yes, does this hydrogeologic map indicate: a. Major areas of recharge/discharge?	Info. not available
b. Regional ground-water flow direction?	Y
c. Potentiometric contours which are consistent with observed water level elevations?	Y
8. Did the owner/operator prepare a facility site map?	Y
If yes, does the site map show: a. Regulated units of the facility (e.g., landfill areas,impoundments)?	Y
b. Any seeps, springs, streams, ponds, or wetlands?	Y
c. Location of monitoring wells, soil borings, or test pits?	Y
d. How many regulated units does the facility have? 1 RCRA unit	
If more than one regulated unit then, • Does the waste management area encompass all regulated units?	N/A
• Is a waste management area delineated for each regulated unit?	N/A
C. Characterization of Subsurface Geology of Site	
1. Soil boring/test pit program:	
a. Were the soil borings/test pits performed under thesupervision of a qualified professional?	N
b. Did the owner/operator provide documentation for selecting the spacing for borings?	N
c. Were the borings drilled to the depth of the first confining unit below the uppermost zone of saturation or ten feet into bedrock?	N
d. Indicate the method(s) of drilling:	N

	Y/N
Auger (hollow or solid stem) ____ Mud rotary ____ Reverse rotary ____ Cable tool ____ Jetting ____ Other (specify) _____	unknown
e. Were continuous sample corings taken?	N
f. How were the samples obtained (checked method[s]) • Split spoon ____ • Shelby tube, or similar ____ • Rock coring ____ • Ditch sampling ____ • Other (explain) _____	unknown
g. Were the continuous sample corings logged by a qualified professional in geology?	unknown
h. Does the field boring log include the following information: • Hole name/number?	Y
• Date started and finished?	↓
• Driller's name?	↓
• Hole location (i.e., map and elevation)?	↓
• Drill rig type and bit/auger size?	N
• Gross petrography (e.g., rock type) of each geologic unit?	Y
• Gross mineralogy of each geologic unit?	N
• Gross structural interpretation of each geologic unit and structural features (e.g., fractures, gouge material, solution channels, buried streams or valleys, identification of depositional material)?	N
• Development of soil zones and vertical extent and description of soil type?	N
• Depth of water bearing unit(s) and vertical extent of each?	N
• Depth and reason for termination of borehole?	N
• Depth and location of any contaminant encountered in borehole?	Y
• Sample location/number?	N
• Percent sample recovery?	↓
• Narrative descriptions of: —Geologic observations?	↓
—Drilling observations?	↓
i. Were the following analytical tests performedon the core samples: • Mineralogy (e.g., microscopic tests and x-ray diffraction)?	↓
• Petrographic analysis: —degree of crystallinity and cementation of matrix?	↓
—degree of sorting, size fraction (i.e., sieving), textural variations?	↓
—rock type(s)?	↓

	Y/N
—soil type?	N
—approximate bulk geochemistry?	
—existence of microstructures that may effect or indicate fluid flow?	
• Falling head tests?	
• Static head tests?	
• Settling measurements?	
• Centrifuge tests?	
• Column drawings?	
D. Verification of Subsurface Geological Data 1. Has the owner/operator used indirect geophysical methods to supplement geological conditions between borehole locations?	N
2. Do the number of borings and analytical data indicate that the confining layer displays a low enough permeability to impede the migration of contaminants to any stratigraphically low water-bearing units?	Sunoco seems to think so
3. Is the confining layer laterally continuous across the entire site?	N
4. Did the owner/operator consider the chemical compatibility of the site-specific waste types and the geologic materials of the confining layer?	N
5. Did the geologic assessment address or provide means for resolution of any information gaps of geologic data?	N
6. Do the laboratory data corroborate the field data for petrography?	N/A
7. Do the laboratory data corroborate the field data for mineralogy and subsurface geochemistry?	N/A
E. Presentation of Geologic Data 1. Did the owner/operator present geologic cross sections of the site?	Y
2. Do cross sections: a. identify the types and characteristics of the geologic materials present?	Y
b. define the contact zones between different geologic materials?	Y
c. note the zones of high permeability or fracture?	N
d. give detailed borehole information including:	

	Y/N
• location of borehole?	Y
• depth of termination?	Y
• location of screen (if applicable)?	N/A
• depth of zone(s) of saturation?	Y
• backfill procedure?	N
3. Did the owner/operator provide a topographic map which was constructed by a licensed surveyor?	Y
4. Does the topographic map provide:	
a. contours at a maximum interval of two-feet?	Y
b. locations and illustrations of man-made features (e.g., parking lots, factory buildings, drainage ditches, storm drain, pipelines, etc.)?	
c. descriptions of nearby water bodies?	
d. descriptions of off-site wells?	
e. site boundaries?	
f. individual RCRA units?	
g. delineation of the waste management area(s)?	
h. well and boring locations?	N
5. Did the owner/operator provide an aerial photograph depicting the site and adjacent off-site features?	N
6. Does the photograph clearly show surface water bodies, adjacent municipalities, and residences and are these clearly labelled?	N/A
F. Identification of Ground-Water Flowpaths	
1. Ground-water flow direction	
a. Was the well casing height measured by a licensed surveyor to the nearest 0.01 feet?	Y
b. Were the well water level measurements taken within a 24 hour period?	Y
c. Were the well water level measurements taken to the nearest 0.01 feet?	Y
d. Were the well water levels allowed to stabilize after construction and development for a minimum of 24 hours prior to measurements?	Y
e. Was the water level information obtained from (check appropriate one):	
• multiple piezometers placed in single borehole? ____	
• vertically nested piezometers in closely spaced separate ____	
• boreholes? ____	
• monitoring wells? X	

	Y/N
f. Did the owner/operator provide construction details for the piezometers?	N
g. How were the static water levels measured (check method[s]). • Electric water sounder ____ • Wetted tape ____ • Air line ____ • Other (explain) ____	unknown
h. Was the well water level measured in wells with equivalent screened intervals at an equivalent depth below the saturated zone?	N/A
i. Has the owner/operator provided a site water table (potentiometric) contour map?	Y
If yes, • Do the potentiometric contours appear logical and accurate based on topography and presented data? (Consult water level data)	Y
• Are ground-water flow-lines indicated?	Y
• Are static water levels shown?	Y
• Can hydraulic gradients be estimated?	Y
j. Did the owner/operator develop hydrologic cross sections of the vertical flow component across the site using measurements from all wells?	N
k. Do the owner/operator's flow nets include: • piezometer locations?	N/A
• depth of screening?	↓
• width of screening?	↓
• measurements of water levels from all wells and piezometers?	↓
2. Seasonal and temporal fluctuations in ground-water a. Do fluctuations in static water levels occur? If yes, are the fluctuations caused by any of the following:	Y
—Off-site well pumping	N
—Tidal processes or other intermittent natural variations (e.g., river stage, etc.)	Y
—On-site well pumping	Y
—Off-site, on-site construction or changing land use patterns	N
—Deep well injection	N
—Seasonal variations	Y
—Other (specify) ____	–
b. Has the owner/operator documented sources and patterns that contribute to or affect the ground-water patterns below the waste management?	Y
c. Do water level fluctuations alter the general ground-water gradients and flow directions?	N
d. Based on water level data, do any head differentials occur that may indicate a vertical flow component in the saturated zone?	N

	Y/N
e. Did the owner/operator implement means for gauging long term effects on water movement that may result from on-site or off-site construction or changes in land-use patterns?	N
3. Hydraulic conductivity a. How were hydraulic conductivities of the subsurface materials determined?	unknown
• Single-well tests (slug tests)?	"
• Multiple-well tests (pump tests)	"
• Other (specify) _____	"
b. If single-well tests were conducted, was it done by: • Adding or removing a known volume of water?	unknown
• Pressurizing well casing?	"
c. If single well tests were conducted in a highly permeable formation, were pressure transducers and high-speed recording equipment used to record the rapidly changing water levels?	"
d. Since single well tests only measure hydraulic conductivity in a limited area, were enough tests run to ensure a representative measure of conductivity in each hydrogeologic unit?	"
e. Is the owner/operator's slug test data (if applicable) consistent with existing geologic information (e.g., boring logs)?	unknown
f. Were other hydraulic conductivity properties determined?	unknown
g. If yes, provide any of the following data, if available: • Transmissivity _____ • Storage coefficient _____ • Leakage _____ • Permeability _____ • Porosity 30% was the assumed porosity • Specific capacity _____ • Other (specify) hydraulic conductivity - 5×10^{-3} to 5×10^{-4} cm/s	
4. Identification of the uppermost aquifer a. Has the extent of the uppermost saturated zone (aquifer) in the facility area been defined? If yes,	unknown
• Are soil boring/test pit logs included?	"
• Are geologic cross-sections included?	"
b. Is there evidence of confining (competent, unfractured, continuous, and low permeability) layers beneath the site? If yes,	Y
• how was continuity demonstrated? there is a cross-section in the Part B app.	unknown
c. What is hydraulic conductivity of the confining unit (if present)? CM/Sec How was it determined?	unknown

	Y/N
d. Does potential for other hydraulic communication exist (e.g., lateral incontinuity between geologic units, facies changes, fracture zones, cross cutting structures, or chemical corrosion/alteration of geologic units by leachage? If yes or no, what is the rationale? only direct discharge from the upper aquifer to the Schuylkill River	N
G. Office Evaluation of the Facility's Ground-Water Monitoring System—Monitoring Well Design and Construction: These questions should be answered for each different well design present at the facility. 1. Drilling Methods a. What drilling method was used for the well? • Hollow-stem auger ☐ • Solid-stem auger ☐ • Mud rotary ☐ • Air rotary ☐ • Reverse rotary ☐ • Cable tool ☐ • Jetting ☐ • Air drill w/ casing hammer ☐ • Other (specify) _____	unknown
b. Were any cutting fluids (including water) or additives used during drilling? If yes, specify: • Type of drilling fluid _____ • Source of water used _____ • Foam _____ • Polymers _____ • Other _____	unknown
c. Was the cutting fluid, or additive, identified?	unknown
d. Was the drilling equipment steam-cleaned prior to drilling the well? • Other methods _____	unknown
e. Was compressed air used during drilling? If yes, • was the air filtered to remove oil?	"
f. Did the owner/operator document procedure for establishing the potentiometric surface? If yes, • how was the location established?	"
g. Formation samples	"

	Y/N
• Were formation samples collected initially during drilling?	unknown
• Were any cores taken continuous?	"
• If not, at what interval were samples taken?	"
• How were the samples obtained? —Split spoon —Shelby tube —Core drill —Other (specify)	"
• Identify if any physical and/or chemical tests were performed on the formation samples (specify) _____ _____ _____	"
2. Monitoring Well Construction Materials a. Identify construction materials (by number) and diameters (ID/OD) Material / Diameter • Primary Casing: steel / 12" • Secondary or outside casing (doubleconstruction): steel / 16" • Screen: steel / 12"	
b. How are the sections of casing and screen connected? • Pipe sections threaded	unknown
• Couplings (friction) with adhesive or solvent	↓
• Couplings (friction) with retainer screws	↓
• Other (specify)	↓
c. Were the materials steam-cleaned prior to installation? • If no, how were the materials cleaned? _____	unknown
3. Well Intake Design and Well Development a. Was a well intake screen installed?	Y
• What is the length of the screen for the well? 20 feet	
• Is the screen manufactured?	unknown
b. Was a filter pack installed?	↓
• What kind of filter pack was employed? _____	↓
• Is the filter pack compatible with formationmaterials?	↓
• How was the filter pack installed? _____	↓

	Y/N
• What are the dimensions of the filter pack? _____	unknown
• Has a turbidity measurement of the well water ever been made?	"
• Have the filter pack and screen been designed for the insitu materials? _____	"
c. Well development • Was the well developed?	"
• What technique was used for well development? —Surge block —Bailer —Air surging —Water pumping —Other (specify) _____	"
4. Annular Space Seals a. What is the annular space in the saturated zone directlyabove the filter pack filled with: —Sodium bentonite (specify type and grit) —Cement (specify neat or concrete) —Other (specify)	unknown
b. Was the seal installed by: —Dropping material down the hole and tamping —Dropping material down the inside of hollow-stem auger —Tremie pipe method —Other (specify)	"
c. Was a different seal used in the unsaturated zone? If yes,	"
• Was this seal made with? —Sodium bentonite (specify type and grit) —Cement (specify neat or concrete)- Other (specify)	"
• Was this seal installed by? —Dropping material down the hole and tamping —Dropping material down the inside of hollow stem auger —Other (specify)	"
d. Is the upper portion of the borehole sealed with a concrete cap to prevent infiltration from the surface?	Y
e. Is the well fitted with an above-ground protectivedevice and bumper guards?	Y
f. Has the protective cover been installed with locks to prevent tampering?	Y

	Y/N
H. Evaluation of the Facility's Detection Monitoring Program	
1. Placement of Downgradient Detection Monitoring Wells	
a. Are the ground-water monitoring wells or clusters located immediately adjacent to the waste management area?	Y
b. How far apart are the detection monitoring wells?	200'
c. Does the owner/operator provide a rationale for thelocation of each monitoring well or cluster?	N
d. Does the owner/operator identified the well screenlengths of each monitoring well or clusters?	Y
e. Does the owner/operator provide an explanation for the well screen lengths of each monitoring well orcluster?	N
f. Do the actual locations of monitoring wells orclusters correspond to those identified by the owner/operator?	Y
2. Placement of Upgradient Monitoring Wells	
a. Has the owner/operator documented the location ofeach upgradient monitoring well or cluster?	Y
b. Does the owner/operator provide an explanation forthe location(s) of the upgradient monitoring wells?	N
c. What length screen has the owner/operator employed inthe background monitoring well(s)?	20'
d. Does the owner/operator provide an explanation for the screen length(s) chosen?	N
e. Does the actual location of each background monitoring well or cluster correspond to that identified by the owner/operator?	Y
I. Office Evaluation of the Facility's Assessment Monitoring Program	
1. Does the assessment plan specify:	Y
a. The number, location, and depth of wells?	
b. The rationale for their placement and identify the basis that will be used to select subsequent sampling locations and depths in later assessment phases?	Y
2. Does the list of monitoring parameters include all hazardous waste constituents from the facility?	Y

	Y/N
a. Does the water quality parameter list include other important indicators not classified as hazardous waste constituents?	Y
b. Does the owner/operator provide documentation for he listed wastes which are not included?	N
3. Does the owner/operator's assessment plan specify the procedures to be used to determine the rate of constituent migration in the ground-water?	Y
4. Has the owner/operator specified a schedule of implementation in the assessment plan?	Y
5. Have the assessment monitoring objectives been clearly defined in the assessment plan?	Y
a. Does the plan include analysis and/or re-evaluation to determine if significant contamination has occurredin any of the detection monitoring wells?	
b. Does the plan provide for a comprehensive program of investigation to fully characterize the rate and extent of contaminant migration from the facility?	
c. Does the plan call for determining the concentrations of hazardous wastes and hazardous waste constituentsin the ground water?	
d. Does the plan employ a quarterly monitoring program?	
6. Does the assessment plan identify the investigatory methods that will be used in the assessment phase?	Y
a. Is the role of each method in the evaluation fully described?	Y
b. Does the plan provide sufficient descriptions of the direct methods to be used?	Y
c. Does the plan provide sufficient descriptions of the indirect methods to be used?	N
d. Will the method contribute to the further characterization of the contaminant movement?	Y
7. Are the investigatory techniques utilized in the assessment program based on direct methods?	Y
a. Does the assessment approach incorporate indirect methods to further support direct methods?	N
b. Will the planned methods called for in the assessment approach ultimately meet performance standards for assessment monitoring?	N
c. Are the procedures well defined?	Y
d. Does the approach provide for monitoring wells similar in design and construction as the detectionmonitoring wells?	N

	Y/N
e. Does the approach employ taking samples during drilling or collecting core samples for further analysis?	Y
8. Are the indirect methods to be used based on reliable and accepted geophysical techniques?	N/A
a. Are they capable of detecting subsurface changesresulting from contaminant migration at the site?	
b. Is the measurement at an appropriate level of sensitivity to detect ground-water quality changes at the site?	
c. Is the method appropriate considering the nature of the subsurface materials?	
d. Does the approach consider the limitations of these methods?	
e. Will the extent of contamination and constituent concentration be based on direct methods and sound engineering judgment? (Using indirect methods tofurther substantiate the findings.)	
9. Does the assessment approach incorporate any mathe-matical modeling to predict contaminant movement?	N
a. Will site specific measurements be utilized toaccurately portray the subsurface?	N/A
b. Will the derived data be reliable?	
c. Have the assumptions been identified?	
d. Have the physical and chemical properties of the site-specific wastes and hazardous waste constituentsbeen identified?	
J. Conclusions	
1. Subsurface geology	
a. Has sufficient data been collected to adequately define petrography and petrographic variation?	N
b. Has the subsurface geochemistry been adequately defined?	
c. Was the boring/coring program adequate to definesubsurface geologic variation?	
d. Was the owner/operator's narrative description complete and accurate in its interpretation of the data?	Y
e. Does the geologic assessment address or provide means to resolve any information gaps?	N
2. Ground-water flowpaths	Y
a. Did the owner/operator adequately establish the hori-zontal and vertical components of ground-water flow?	

	Y/N
b. Were appropriate methods used to establish ground-water flowpaths?	Y
c. Did the owner/operator provide accurate documentation?	N
d. Are the potentiometric surface measurements valid?	unknown
e. Did the owner/operator adequately consider the seasonal and temporal effects on the ground-water?	Y
f. Were sufficient hydraulic conductivity tests performed to document lateral and vertical variationin hydraulic conductivity in the entire hydrogeologic subsurface below the site?	unknown
3. Uppermost Aquifer a. Did the owner/operator adequately define the upper-most aquifer?	Y
4. Monitoring Well Construction and Design a. Do the design and construction of the owner/operator's ground-water monitoring wells permit depth discrete ground-water samples to be taken?	N
b. Are the samples representative of ground-water quality?	unknown
c. Are the ground-water monitoring wells structurally stable?	Y
d. Does the ground-water monitoring well's design and construction permit an accurate assessment of aquifer characteristics?	N
5. Detection Monitoring a. Downgradient Wells • Do the location, and screen lengths of the ground-water monitoring wells or clusters in the detection monitoring system allow the immediate detection of a release of hazardous waste or constituents from the hazardous waste management area to the uppermost aquifer?	N
b. Upgradient Wells • Do the location and screen lengths of the upgradient (background) ground-water monitoring wells ensure the capability of collecting ground-water samples representative of upgradient (background) ground-water quality including any ambient heterogenous chemical characteristics?	N
6. Assessment Monitoring a. Has the owner/operator adequately characterized site hydrogeology to determine contaminant migration?	N
b. Is the detection monitoring system adequately designed and constructed to immediately detect any contaminant release?	N

	Y/N
c. Are the procedures used to make a first determinationof contamination adequate?	N
d. Is the assessment plan adequate to detect, characterize, and track contaminant migration?	Y
e. Will the assessment monitoring wells, given site hydrogeologic conditions, define the extent and concentration of contamination in the horizontal and vertical planes?	Y
f. Are the assessment monitoring wells adequately designed and constructed?	N
g. Are the sampling and analysis procedures adequate to provide true measures of contamination?	
h. Do the procedures used for evaluation of assessment monitoring data result in determinations of the rate of migration, extent of migration, and hazardous constituent composition of the contaminant plume?	
i. Are the data collected at sufficient frequency and duration to adequately determine the rate of migration?	
j. Is the schedule of implementation adequate?	
k. Is the owner/operator's assessment monitoring plan adequate?	
• If the owner/operator had to implement hisassessment monitoring plan, was it implemented satisfactorily?	N/A
II. Field Evaluation	
A. Ground-Water Monitoring System	
1. Are the numbers, depths, and locations of monitoring wells in agreement with those reported in the facility's monitoring plan? (See Section 3.2.3.)	Y
B. Monitoring Well Construction	
1. Identify construction material material diameter a. Primary Casing 12" steel b. Secondary or outside casing 16" steel	
2. Is the upper portion of the borehole sealed with conrete to prevent infiltration from the surface?	Y
3. Is the well fitted with an above-ground protective device?	Y
4. Is the protective cover fitted with locks to prevent tampering? If a facility utilizes more than a single well design, answer the above questions for each well design?	Y

	Y/N
III. Review of Sample Collection Procedures	
A. Measurement of Well Depths /Elevation	
1. Are measurements of both depth to standing water and depth to the bottom of the well made?	Y
2. Are measurements taken to the 0.01 feet?	Y
3. What device is used? electric sounding tape	
4. Is there a reference point established by a licensed surveyor?	Y
5. Is the measuring equipment properly cleaned betweenwll locations to prevent cross contamination?	Y
B. Detection of Immiscible Layers	
1. Are procedures used which will detect light phase immiscible layers?	Y
2. Are procedures used which will detect heavy phase immiscible layers?	Y
C. Sampling of Immiscible Layers	
1. Are the immiscible layers sampled separately prior to well evacuation?	N
2. Do the procedures used minimize mixing with watersoluble phases?	N/A
D. Well Evacuation	
1. Are low yielding wells evacuated to dryness?	Y
2. Are high yielding wells evacuated so that at least three casing volumes are removed?	Y
3. What device is used to evacuate the wells? submersible pump	
4. If any problems are encountered (e.g., equipmentmalfunction) are they noted in a field logbook?	Y

	Y/N
E. Sample Withdrawal	
1. For low yielding wells, are samples for volatiles, pH, and oxidation/reduction potential drawn first after the well recovers?	Y
2. Are samples withdrawn with either flurocarbon/resins or stainless steel (316, 304 or 2205) sampling devices?	Y
3. Are sampling devices either bottom valve bailers or positive gas displacement bladder pumps?	Y
4. If bailers are used, is fluorocarbon/resin coated wire, single strand stainless steel wire, or monofilament used to raise and lower the bailer?	N/A
5. If bladder pumps are used, are they operated in acontinuous manner to prevent aeration of the sample?	Y
6. If bailers are used, are they lowered slowly to prevent degassing of the water?	N/A
7. If bailers are used, are the contents transferred to the sample container in a way that minimizes agitation and aeration?	N/A
8. Is care taken to avoid placing clean sampling equipment on the ground or other contaminated surfaces prior to insertion into the well?	Y
9. If dedicated sampling equipment is not used, is equipment disassembled and thoroughly cleaned between samples?	N/A
10. If samples are for inorganic analysis, does the cleaning procedure include the following sequential steps: a. Dilute acid rinse (HNO_3 or HC1)?11. If samples are for organic analysis, does the cleaning procedure include the following sequential steps:	N/A
11. If samples are for inorganic analysis, does the cleaning procedure include the following sequential steps: a. Nonphosphate detergent wash?	N/A
b. Tap water rinse?	↓
c. Distilled/deionized water rinse?	
d. Acetone rinse?	
e. Pesticide-grade hexane rinse?	

	Y/N
12. Is sampling equipment thoroughly dry before use?	Y
13. Are equipment blanks taken to ensure that sample cross-contamination has not occurred?	Y
14. If volatile samples are taken with a positive gas displacement bladder pump, are pumping rates below 100 ml/min?	Y
F. In-situ or Field Analyses	
1. Are the following labile (chemically unstable) parameters determined in the field:	
a. pH?	Y
b. Temperature?	Y
c. Specific conductivity?	Y
d. Redox potential?	N
e. Chlorine?	N
f. Dissolved oxygen?	N
g. Turbidity?	N
h. Other (specify) _____	N
2. For in-situ determinations, are they made after well evacuation and sample removal?	Y
3. If sample is withdrawn from the well, is parameter measured from a split portion?	Y
4. Is monitoring equipment calibrated according to mannufacturers' specifications and consistent with SW-846?	Y
5. Is the date, procedure, and maintenance for equipment calibration documented in the field logbook?	Y
IV. Review of Sample Preservation and Handling Procedures	
A. Sample Containers	
1. Are samples transferred from the sampling device directly to their compatible containers?	Y

	Y/N
2. Are sample containers for metals (inorganics) analyses polyethylene with polypropylene caps?	Y
3. Are sample containers for organics analysis glass bottles with fluorocarbonresin-lined caps?	Y
4. If glass bottles are used for metals samples are the caps fluorocarbonresin-lined?	N/A
5. Are the sample containers for metal analyses cleanedusing these sequential steps:	
a. Nonphosphate detergent wash?	Y
b. 1:1 nitric acid rinse?	↓
c. Tap water rinse?	↓
d. 1:1 hydrochloric acid rinse?	↓
e. Tap water rinse?	↓
f. Distilled/deionized water rinse?	↓
6. Are the sample containers for organic analyses cleaned using these sequential steps:	
a. Nonphosphate detergent/hot water wash?	Y
b. Tap water rinse?	↓
c. Distilled/deionized water rinse?	↓
d. Acetone rinse?	↓
e. Pesticide-grade hexane rinse?	↓
7. Are trip blanks used for each sample container type to verify cleanliness?	Y
B. Sample Preservation Procedures	
1. Are samples for the following analyses cooled to 4°C:	
a. TOC?	Y
b. TOX?	Y
c. Chloride?	Y
d. Phenols?	Y
e. Sulfate?	Y
f. Nitrate?	Y
g. Coliform bacteria?	N/A
h. Cyanide?	N/A
i. Oil and grease?	Y
j. Hazardous constituents (}261, Appendix VIII)?	Y

	Y/N
2. Are samples for the following analyses field acidified to pH <2 with HNO_3:	
a. Iron?	Y
b. Manganese?	
c. Sodium?	
d. Total metals?	
e. Dissolved metals?	
f. Fluoride?	N/A
g. Endrin?	
h. Lindane?	
i. Methoxychlor?	
j. Toxaphene?	
k. 2,4, D?	
l. 2,4,5 TP Silvex?	
m. Radium?	
n. Gross alpha?	
o. Gross beta?	
3. Are samples for the following analyses field acidfied to pH <2 with H_2SO_4:	
a. Phenols?	Y
b. Oil and grease?	Y
4. Is the sample for TOC analyses field acified to pH <2 with HCl?	Y
5. Is the sample for TOX analysis preserved with 1 ml of 1.1 M sodium sulfite?	N
6. Is the sample for cyanide analysis preserved with NaOH to pH >12?	N/A
C. Special Handling Considerations	
1. Are organic samples handled without filtering?	Y
2. Are samples for volatile organics transfered to the appropriate vials to eliminate headspace over the sample?	Y
3. Are samples for metal analysis split into two portions?	Y
4. Is the sample for dissolved metals filtered through a 0.45 micron filter?	Y
5. Is the second portion not filtered and analyzed for total metals?	Y
6. Is one equipment blank prepared each day of ground-water sampling?	Y

	Y/N
V. Review of Chain-of-Custody Procedures	
A. Sample Labels	
1. Are sample labels used?	Y
2. Do they provide the following information:	
a. Sample identification number?	Y
b. Name of collector?	Y
c. Date and time of collection?	Y
d. Place of collection?	Y
e. Parameter(s) requested and preservitives used?	Y
3. Do they remain legible even if wet?	Y
B. Sample Seals	
1. Are sample seals placed on those containers to ensure samples are not altered?	Y
C. Field Logbook	
1. Is a field logbook maintained?	Y
2. Does it document the following:	
a. Purpose of sampling (e.g., detection or assesment)?	Y
b. Location of well(s)?	
c. Total depth of each well?	
d. Static water level depth and measurement technique?	
e. Presence of immiscible layers and detection method?	
f. Collection method for immiscible layers and sample identification numbers?	
g. Well evacuation procedures?	
h. Sample withdrawal procedure?	
i. Date and time of collection?	
j. Well sampling sequence?	
k. Types of sample containers and sample identification number(s)?	
l. Preservative(s) used?	
m. Parameters requested?	
n. Field analysis data and method(s)?	
o. Sample distribution and transporter?	
p. Field observations?	Y

	Y/N
—Unusual well recharge rates?	Y
—Equipment malfunction(s)?	
—Possible sample contamination?	
—Sampling rate?	
D. Chain-of-Custody Record	
1. Is a chain-of-custody record included with each sample?	Y
2. Does it document the following:	
a. Sample number?	Y
b. Signiture of collector?	
c. Date and time of collection?	
d. Sample type?	
e. Station location?	
f. Number of containers?	
g. Parameters requested?	
h. Signatures of persons involved in chain-of-custody?	
i. Inclusive dates of custody?	
E. Sample Analysis Request Sheet	
1. Does a sample analysis request sheet accompany each sample?	Y
2. Does the request sheet document the following:	
a. Name of person receiving the sample?	Y
b. Date of sample receipt?	
c. Duplicates?	
d. Analysis to be performed?	
IV. Review of Quality Assurance/Quality Control	
A. Is the validity and reliability of the laboratory and field generated data ensured by a QA/QC program?	Y
B. Does the QA/QC program include:	
1. Documentation of any deviation from approved procedures?	Y

	Y/N
2. Documentation of analytical results for:	
a. Blanks?	Y
b. Standards?	
c. Duplicates?	
d. Spiked samples?	
e. Detectable limits for each parameter being analyzed?	
C. Are approved statistical methods used?	Y
D. Are QC samples used to correct data?	Y
E. Are all data critically examined to ensure it has been properly calculated and reported?	Y
VII. Surficial Well Inspection and Field Observation	
A. Are the wells adequately maintained?	Y
B. Are the monitoring wells protected and secure?	Y
C. Do the wells have surveyed casing elevations?	Y
D. Are the ground-water samples turbid?	Y
E. Have all physical characteristics of the site been noted in the inspector's field notes (i.e., surface waters, topography, surface features)?	Y
F. Has a site sketch been prepared by the field inspector with scale, north arrow, location(s) of buildings, location(s) of regulated units, locations of monitoring wells, and a rough depiction of the site drainage pattern?	Y

	Y/N
VIII. Conclusions	
A. Is the facilitycurrently operating under the correct monitoring progaram according to the statistical analyses performed by the current operator?	Y
B. Does the ground-water monitoring system, as designed and operated, allow for detection or assessment of any possible ground-water contamination caused by the facility?	N
C. Does the sampling and analysis procedures permit the owner/operator to detect and, where possible, assess the nature and extent of a release of hazardous constituents to ground water from the monitored hazardous waste management facility?	N

Figure 4.3
Relationship of Technical Inadequacies to Ground-Water Performance Standards

Examples of Basic Elements Required by Performance Standards	Examples of Technical Inadequacies that may Constitute Violations	Regulatory Citations
1. Uppermost Aquifer must be correctly identified.	• failure to consider aquifers hydraulically interconnected to the uppermost aquifer.	§265.90(a) §265.91(a)(1, 2) §270.14(c)(2)
	• incorrect identification of certain formations as confining layers or aquitards.	§265.90(a) §265.91(a)(1, 2) §270.14(c)(2)
	• failure to use test drilling and/or soil borings to characterize subsurface hydrogeology.	§265.90(a) §265.91(a)(1, 2) §270.14(c)(2)
2. Ground-water flow directions and rates must be properly determined.	• failure to use piezometers or wells to determine ground-water flow rates and directions (or failure to use a sufficient number of them).	§265.90(a) §265.91(a)(1, 2) §270.14(c)(2)
	• failure to consider temporal variations in water levels when establishing flow directions (e.g., seasonal variations, short-term fluctuations due to pumping).	§265.90(a) §265.91(a)(1, 2) §270.14(c)(2)
	• failure to assess significance of vertical gradients when evaluating flow rates and directions.	§265.90(a) §265.91(a)(1, 2) §270.14(c)(2)
	• failure to use standard/consistent benchmarks when establishing water level elevations.	§265.90(a) §265.91(a)(1, 2) §270.14(c)(2)
	• failure of the owner/operator (o/o) to consider the effect of local withdrawal wells on ground-water flow direction.	§265.90(a) §265.91(a)(1)
	• failure of the o/o to obtain sufficient water level measurements.	§265.90(a) §265.91(a)(1)

Examples of Basic Elements Required by Performance Standards	Examples of Technical Inadequacies that may Constitute Violations	Regulatory Citations
6. Downgradient monitoring wells must be constructed so as to yield samples that are representative of in-situ ground-water quality.	See No. 4 above.	
7. Samples from background and downgradient wells must be properly collected and analyzed.	• failure to evacuate stagnant water from the well before sampling.	§265.90(a), §265.92(a) §265.93(d)(4) §2705.14(c)(4)
	• failure to sample wells within a reasonable amount of time after well evacuation.	§265.90(a) §265.92(a) §265.93(d)(4) §270.14(c)(4)
	• improper decisions regarding filtering or non-filtering of samples prior to analysis (e.g., use of filtration on samples to be analyzed for volatile organics).	§265.90(a) §265.92(a) §265.93(d)(4) §270.14(c)(4)
	• use of an inappropriate sampling device.	§265.90(a) §265.92(a) §265.93(d)(4) §270.14(c)(4)
	• use of improper sample preservation techniques.	§265.90(a) §265.92(a) §265.93(d)(4) §270.14(c)(4)

Examples of Basic Elements Required by Performance Standards	Examples of Technical Inadequacies that may Constitute Violations	Regulatory Citations
7. Samples from background and downgradient wells must be properly collected and analyzed. (Continued)	• samples collected with a device that is constructed of materials that interfere with sample integrity.	§265.90(a) §265.92(a) §265.93(d)(4) §270.14(c)(4)
	• samples collected with a non-dedicated sampling device that is not cleaned between sampling events.	§265.90(a) §265.92(a) §265.93(d)(4) §270.14(c)(4)
	• improper use of a sampling device such that sample quality is affected (e.g., degassing of sample caused by agitation of bailer).	§265.90(a) §265.92(a) §265.93(d)(4) §270.14(c)(4)
	• improper handling of samples (e.g., failure to eliminate headspace from containers of samples to be analyzed for volatiles).	§265.90(a) §265.92(a) §265.93(d)(4) §270.14(c)(4)
	• failure of the sampling plan to establish procedures for sampling immiscibles (i.e., "floaters" and "sinkers").	§265.90(a) §265.92(a) §265.93(d)(4) §270.14(c)(4)
	• failure to follow appropriate QA/QC procedures.	§265.90(a) §265.92(a) §265.93(d)(4) §270.14(c)(4)
	• failure to ensure sample integrity through the use of proper chain-of-custody procedures.	§265.90(a) §265.92(a) §265.93(d)(4) §270.14(c)(4)
	• failure to demonstrate suitability of methods used for sample analysis (other than those specified in SW-846).	§265.90(a) §265.92(a) §265.93(d)(4) §270.14(c)(4)
	• failure to perform analysis in the field on unstable parameters or constituents (e.g., pH, Eh, specific conductance, alkalinity, dissolved oxygen).	§265.90(a) §265.92(a) §265.93(d)(4) §270.14(c)(4)

Examples of Basic Elements Required by Performance Standards	Examples of Technical Inadequacies that may Constitute Violations	Regulatory Citations
3. Background wells must be located so as to yield samples that are not affected by the facility.	• failure of the o/o to consider the effect of local withdrawal wells on ground-water flow direction.	§265.90(a) §265.91(a)(1)
	• failure of the o/o to obtain sufficient water level measurements.	§265.90(a) §265.91(a)(1)
	• failure of the o/o to consider flow path of dense immiscibles in establishing upgradient well locations.	§265.90(a) §265.91(a)(1)
	• failure of the o/o to consider seasonal fluctuations in ground-water flow direction.	§265.90(a) §265.91(a)(1)
	• failure to install wells hydraulically upgradient, except in cases where upgradient water quality is affected by the facility (e.g., migration of dense immiscibles in the upgradient direction, mounding water beneath the facility).	§265.90(a) §265.91(a)(1)
	• failure of the o/o to adequately characterize subsurface hydrogeology.	§265.90(a) §265.91(a)(1)
	• wells intersect only ground water that flows around facility.	§265.90(a) §265.91(a)(1)
4. Background wells must be constructed so as to yield samples that are representative of in-situ ground-water quality.	• wells constructed of materials that may release or absorb constituents of concern	§265.90(a) §265.91(a)
	• wells improperly sealed—contamination of sample is a concern.	§265.90(a) §265.91(a), (c)
	• nested or multiple screen wells are used and it cannot be demonstrated that there has been no movement of ground water between strata.	§265.90(a) §265.91(a)(1, 2)

Examples of Basic Elements Required by Performance Standards	Examples of Technical Inadequacies that may Constitute Violations	Regulatory Citations
4. Background wells must be constructed so as to yield samples that are representative of in-situ ground-water quality. (Continued)	• improper drilling methods were used, possibly contaminating the formation.	§265.90(a) §265.91(a)
	• well intake packed with materials that may contaminate sample.	§265.90(a) §265.91(a), (c)
	• well screens used are of an inappropriate length.	§265.90(a) §265.91(a)(1, 2)
	• wells developed using water other than formation water.	§265.90(a) §265.91(a)
	• improper well development yielding samples with suspended sediments that may bias chemical analysis.	§265.90(a) §265.91(a)
	• use of drilling muds or nonformation water during well construction that can bias results of samples collected from wells.	§265.90(a) §265.91(a)
5. Downgradient monitoring wells must be located so as to ensure the immediate detection of any contamination migrating from the facility.	• wells not placed immediately adjacent to waste management area.	§265.90(a) §265.91(a)(2)
	• failure of o/o to consider potential pathways for dense immiscibles.	§265.90(a) §265.91(a)(2)
	• inadequate vertical distribution of wells in thick or heavily stratified aquifer.	§265.90(a) §265.91(a)(2)
	• inadequate horizontal distribution of wells in aquifers of varying hydraulic conductivity.	§265.90(a) §265.91(a)(2)
	• likely pathways of contamination (e.g., buried streams channels, fractures, areas of high permeability) are not intersected by wells.	§265.90(a) §265.91(a)(2)
	• well network covers uppermost but not interconnected aquifers.	§265.90(a) §265.91(a)(2)

Examples of Basic Elements Required by Performance Standards	Examples of Technical Inadequacies that may Constitute Violations	Regulatory Citations
7. Samples from background and downgradient wells must be properly collected and analyzed. (Continued)	• use of sample containers that may interfere with sample quality (e.g., synthetic containers used with volatile samples).	§265.90(a) §265.92(a) §265.93(d)(4) §270.14(c)(4)
	• failure to make proper use of sample blanks.	§265.90(a) §265.92(a) §265.93(d)(4) §270.14(c)(4)

CME Inspection: Sunoco Point Breeze Refinery (Land Treatment Unit)
Conducted October 20, 2011
Jennifer A. Wilson, Licensed Professional Geologist, PADEP-SERO

Sunoco's Land Treatment Unit (LTU) is located within their Philadelphia Refinery (also known as the Point Breeze Refinery), on a portion of the property that used to belong to the Atlantic Richfield Company (ARCO), then by Atlantic Refining and Marketing Company (Atlantic). The LTU is a 13-acre tract of land that had been used by Atlantic to dispose of hazardous wastes generated by the refinery's operations. The disposed wastes included Dissolved Air Flotation Float (K047), Slop Oil Emulsion Solids (K049), API Separator Sludges (K051), Leaded Tank Bottoms (K052), and Heat Exchanger Bundle Sludges. The waste disposal began in the 1970s, and ceased in 1990, the year a federal ban on land treatment went into effect. Sunoco acquired the refinery in 1988, and disposed of hazardous wastes in the LTU until 1990. Sunoco disposed of non-hazardous wastewater treatment sludges until 1999. Closure was to be effected by the year 2000.

The groundwater monitoring system at the LTU does not meet RCRA standards. The wells (MW-4, MW-5, and MW-6) were drilled in 1980-1981, before RCRA came into effect. The replacement upgradient well N-11 has now been in use for over 5 years. MW-6 doubles as an extraction well for free product found on the groundwater in the vicinity of the LTU, and was not sampled due to the presence of free product in the well. VOA contamination is ubiquitous at the site.

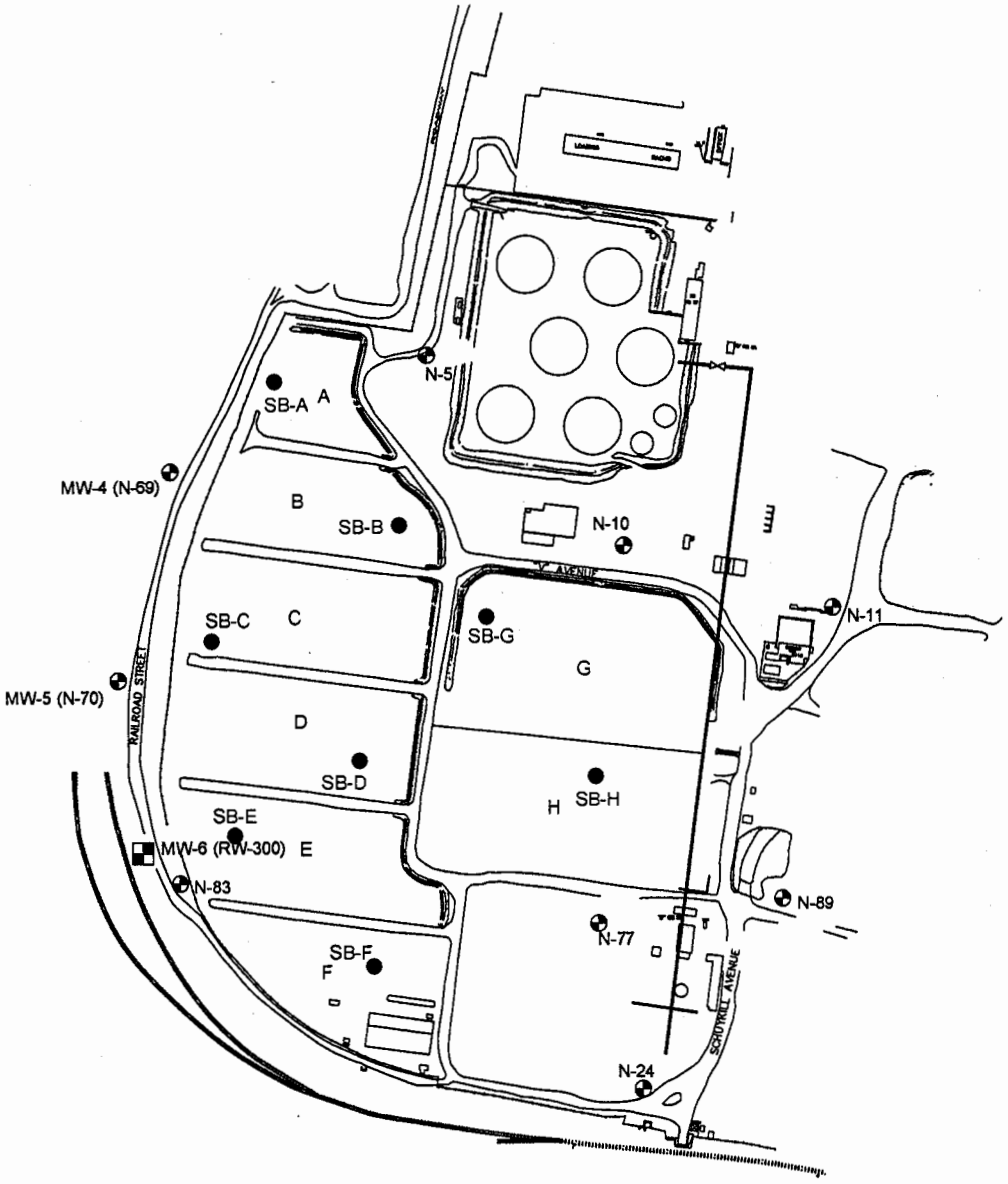

LEGEND

- MONITORING WELL
- A-H LAND TREATMENT UNIT DESIGNATION
- SOIL BORING LOCATION

Aquaterra Technologies, Inc.

DRAFTED BY: SS	SOIL SAMPLE LOCATION MAP 26 MAY 2009		
REVIEWED BY: TLD	SUNOCO, INC. (R&M) POINT BREEZE PROCESSING AREA LAND TREATMENT UNIT PHILADELPHIA, PENNSYLVANIA		
CHECKED BY: KM	AQUATERRA TECHNOLOGIES, INC. 122 S. CHURCH ST, WEST CHESTER, PA 19381		
N	Scale: 1" = 200'	DATE 6-25-2009	FIGURE 2

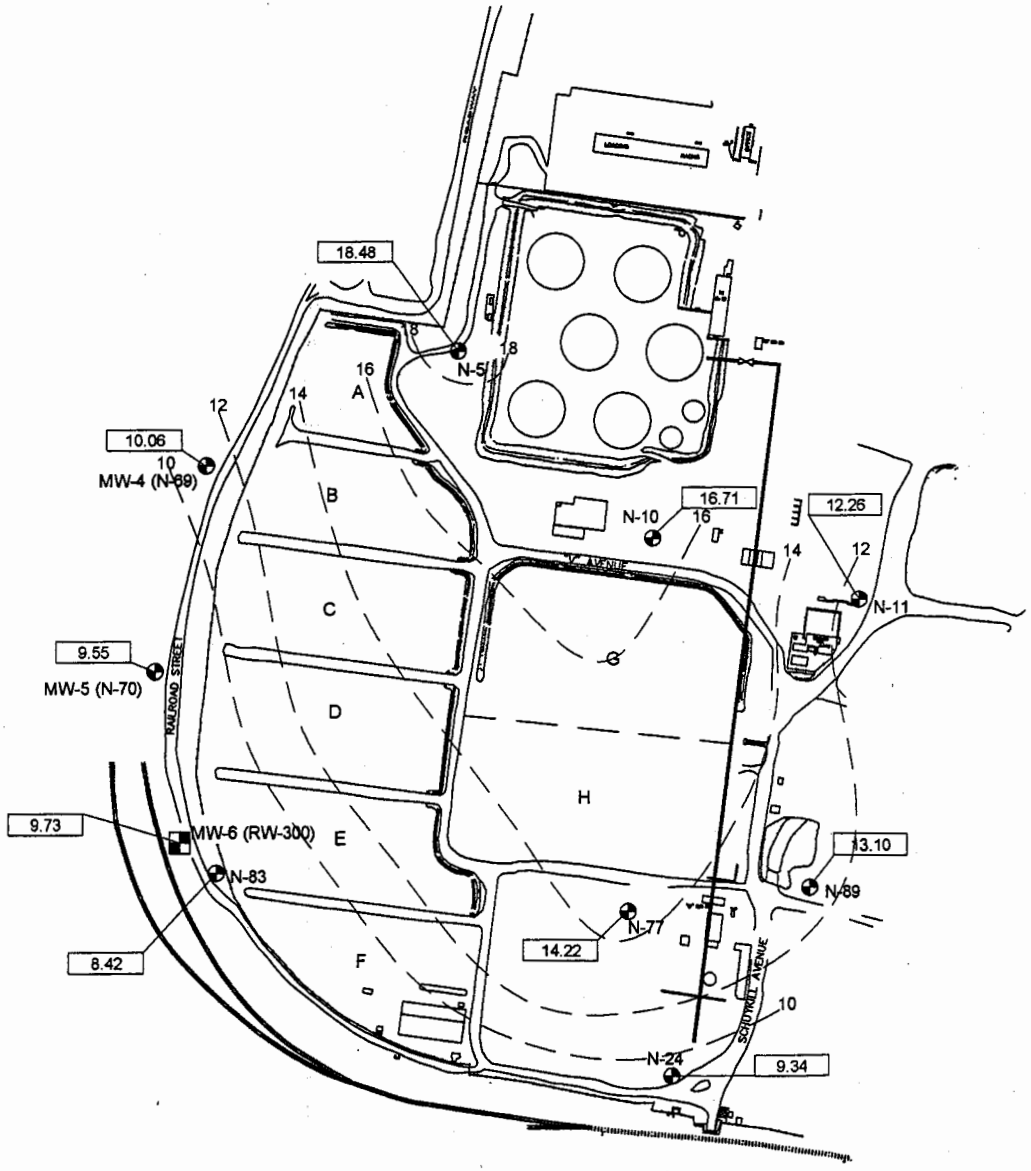

LEGEND

- MONITORING WELL
- A-H LAND TREATMENT UNIT DESIGNATION
- 9.73 GROUNDWATER ELEVATION (feet)
- 16 GROUNDWATER CONTOUR

Aquaterra Technologies, Inc.

DRAFTED BY: JW	GROUNDWATER CONTOUR MAP 20 MAY 2009
REVIEWED BY: TLD	SUNOCO, INC. (R&M) POINT BREEZE PROCESSING AREA LAND TREATMENT UNIT PHILADELPHIA, PENNSYLVANIA
CHECKED BY: KM	AQUATERRA TECHNOLOGIES, INC. 122 S. CHURCH ST, WEST CHESTER, PA 19381

N	Scale: 1" = 200'	DATE 5-20-2009	FIGURE 1

Table 1. Historical Groundwater Monitoring Data Summary
Post-Closure Monitoring
Sunoco, Inc (R&M)
Point Breeze Processing Area Land Treatment Unit

Aquaterra Technologies, Inc.

Well ID	Date	Casing Elevation (feet)	Depth to Product (feet)	Depth to Water (feet)	Product Thickness (feet)	Product Adjusted Groundwater Elevation (feet)	Benzene (µg/L)	Toluene (µg/L)	Oil & Grease (mg/L)	Total Chromium (mg/L)	Total Mercury (mg/L)	pH	Specific Conductance (umhos/cm)
MW-4	27-Mar-06	25.20	NP	16.48	0.00	8.72	<1.0	<5.0	<5.3	<0.0050	<0.00020	6.75	1,700
(N-69)	13-Jun-06	25.20	NP	15.55	0.00	9.65	<1.0	<5.0	<5.0	<0.0050	<0.00020	6.42	1,700
	21-Aug-06	25.20	NP	15.41	0.00	9.79	<1.0	<5.0	<5.2	<0.0050	<0.00020	6.9	1,700
	12-Dec-06	25.20	NP	14.77	0.00	10.43	<1.0	<1.0	5.0	<0.0050	<0.00020	6.92	2,000
	9-Mar-07	25.20	NP	15.85	0.00	9.35	<1.0	<1.0	<5.0	<0.0050	<0.00020	7.07	1,600
	20-Jun-07	25.20	NP	14.61	0.00	10.59	<1.0	<1.0	<5.0	<0.0150	<0.00020	7.2	1,560
	21-Sep-07	25.20	NP	15.62	0.00	9.58	<1	<1	<5.0	<0.0150	<0.00020	7.0	1,640
	18-Dec-07	25.20	NP	16.20	0.00	9.00	<1	<1	<5.0	<0.0150	<0.00020	6.8	1,650
	6-Feb-08	25.20	NP	16.02	0.00	9.18	ND (0.5)	ND (0.5)	<5.0	<0.0020	<0.00020	7.1	1,690
	4-Jun-08	25.20	NP	15.25	0.00	9.95	<1	<1	<5.0	<0.0150	<0.00020	7	1,680
	29-Aug-08	25.20	NP	15.78	0.00	9.42	<1	<1	<5.0	<0.0150	<0.00020	7.1	1,540
	25-Nov-08	25.20	NP	15.70	0.00	9.50	<1	<1	<5.0	<0.0150	<0.00020	6.9	1,470
	11-Mar-09	25.20	NP	15.64	0.00	9.56	<1	<1	<5.0	<0.0150	<0.00020	7.1	1,550
	20-May-09	25.20	NP	15.14	0.00	10.06	<1	<1	<5.0	<0.0150	<0.00020	7.1	1,530
	24-Sep-09	25.20	NP	14.06	0.00	11.14	54	3	<5.0	<0.0150	<0.00020	7.3	1,560
	7-Dec-09	25.20	NP	14.72	0.00	10.48	<1	<1	<5.0	<0.0150	<0.00020	7.6	1,490
	23-Feb-10	25.20	NP	14.82	0.00	10.38	<1	<1	<5.0	<0.0150	<0.00020	8.1	1,440
	2-Jun-10	25.20	NP	14.69	0.00	10.51	<1	<1	<5.0	<0.0150	<0.00020	7.6	1,540
	8-Sep-10	25.20	NP	15.29	0.00	9.91	<1	<1	<5.0	<0.0150	<0.00020	7.5	1,440
	9-Nov-10	25.20	NP	15.34	0.00	9.86	<1	<1	<5.0	<0.0150	<0.00020	7.4	1,570
	14-Mar-11	25.20	NP	15.60	0.00	9.60	<1	<1	<5.0	<0.0150	<0.00020	7.0	1,680
	17-May-11	25.20	NP	15.14	0.00	10.06	<1	<1	<5.0	<0.0150	<0.00020	7.2	1,730
	28-Sep-11	25.20	NP	13.06	0.00	12.14	<1	<1	<5.0	<0.0150	<0.00020	6.9	1,730
	20-Oct-11	25.20	NP	13.97	0.00	11.23	<1	<1	<5.0	<0.0150	<0.00020	7.2	1,580
MW-5	27-Mar-06	24.20	NP	15.66	0.00	8.54	<1.0	<5.0	<5.3	<0.0050	<0.00020	7.03	1,200
(N-70)	13-Jun-06	24.20	NP	15.03	0.00	9.17	<1.0	<5.0	<5.0	<0.0050	<0.00020	6.44	1,300
	21-Aug-06	24.20	NP	14.97	0.00	9.23	<1.0	<5.0	<5.3	<0.0050	<0.00020	7.31	920
	12-Dec-06	24.20	NP	14.40	0.00	9.80	<1.0	<1.0	<5.0	<0.0050	<0.00020	7.18	1,100
	9-Mar-07	24.20	NP	15.36	0.00	8.84	<1.0	<1.0	<5.0	<0.0050	<0.00020	7.13	1,300
	20-Jun-07	24.20	NP	14.37	0.00	9.83	<1.0	<1.0	<5.0	<0.0150	<0.00020	7.0	1,050
	21-Sep-07	24.20	NP	15.21	0.00	8.99	<1	<1	<5.0	<0.0150	<0.00020	6.9	1,220
	18-Dec-07	24.20	NP	15.70	0.00	8.50	<1	<1	<5.0	<0.0150	<0.00020	7.0	1,100
	6-Feb-08	24.20	NP	15.55	0.00	8.65	ND (0.5)	ND (0.5)	<5.0	<0.0020	<0.00020	7.1	1,180
	4-Jun-08	24.20	NP	13.83	0.00	10.37	<1	<1	<5.0	<0.0150	<0.00020	7	1,140
	29-Aug-08	24.20	NP	15.23	0.00	8.97	<1	<1	<5.0	<0.0150	<0.00020	6.8	1,330
	25-Nov-08	24.20	NP	15.11	0.00	9.09	<1	<1	<5.0	<0.0150	<0.00020	6.9	1,080
	11-Mar-09	24.20	NP	15.18	0.00	9.02	<1	<1	<5.0	<0.0150	<0.00020	7.1	1,190
	20-May-09	24.20	NP	14.65	0.00	9.55	<1	<1	<5.0	<0.0150	<0.00020	7.1	1,060
	24-Sep-09	24.20	NP	13.73	0.00	10.47	12	1	<5.0	<0.0150	<0.00020	7.4	986
	7-Dec-09	24.20	NP	14.28	0.00	9.92	<1	<1	<5.0	<0.0150	<0.00020	7.5	863
	23-Feb-10	24.20	NP	14.47	0.00	9.73	<1	<1	<5.0	<0.0150	<0.00020	7.8	1,030
	2-Jun-10	24.20	NP	14.52	0.00	9.68	<1	<1	<5.0	<0.0150	<0.00020	7.1	1,250
	8-Sep-10	24.20	NP	14.86	0.00	9.34	<1	<1	<5.0	<0.0150	<0.00020	7.1	1,010
	9-Nov-10	24.20	NP	14.87	0.00	9.33	<1	<1	<5.0	<0.0150	<0.00020	7.2	1,070
	14-Mar-11	24.20	NP	15.01	0.00	9.19	<1	<1	<5.0	<0.0150	<0.00020	7.1	1,230
	17-May-11	24.20	NP	14.67	0.00	9.53	<1	<1	<5.0	<0.0150	<0.00020	7.1	1,270
	28-Sep-11	24.20	NP	12.81	0.00	11.39	<1	<1	<5.0	<0.0150	<0.00020	6.7	1,470
	20-Oct-11	24.20	NP	13.77	0.00	10.43	<1	<1	<5.0	<0.0150	<0.00020	6.9	1,390

Table 1. Historical Groundwater Monitoring Data Summary
Post-Closure Monitoring
Sunoco, Inc (R&M)
Point Breeze Processing Area Land Treatment Unit

Aquaterra Technologies, Inc.

Well ID	Date	Casing Elevation (feet)	Depth to Product (feet)	Depth to Water (feet)	Product Thickness (feet)	Product Adjusted Groundwater Elevation (feet)	Benzene (µg/L)	Toluene (µg/L)	Oil & Grease (mg/L)	Total Chromium (mg/L)	Total Mercury (mg/L)	pH	Specific Conductance (umhos/cm)
MW-6 (RW-300)	27-Mar-06	23.84	15.59	15.66	0.07	8.30	35	<5.0	37	<0.0050	<0.00020	9.43	6,900
	13-Jun-06	23.84	17.01	18.28	1.27	7.78	9.3	6.5	12	<0.0050	<0.00020	6.28	1,700
	21-Aug-06	23.84	17.19	18.31	1.12	7.49	9.8	7.4	<5.3	<0.0050	<0.00020	6.74	1,700
	12-Dec-06	23.84	14.69	17.55	2.86	11.30	NS-p	NS-p	NS-p	NS-p	NS-p	NS-p	NS-p
	9-Mar-07	23.84	14.87	15.51	0.64	8.81	NS-p	NS-p	NS-p	NS-p	NS-p	NS-p	NS-p
	20-Jun-07	23.84	17.44	17.79	0.35	6.62	NS-p	NS-p	NS-p	NS-p	NS-p	NS-p	NS-p
	21-Sep-07	23.84	8.02	8.07	0.05	15.86	NS-p	NS-p	NS-p	NS-p	NS-p	NS-p	NS-p
	18-Dec-07	23.84	18.13	18.31	0.18	5.85	NS-p	NS-p	NS-p	NS-p	NS-p	NS-p	NS-p
	6-Feb-08	23.84	18.21	18.29	0.08	5.69	NS-p	NS-p	NS-p	NS-p	NS-p	NS-p	NS-p
	4-Jun-08	23.84	NM	NM	NM	NM	NS-p	NS-p	NS-p	NS-p	NS-p	NS-p	NS-p
	29-Aug-08	23.84	15.94	16.95	1.01	8.66	NS-p	NS-p	NS-p	NS-p	NS-p	NS-p	NS-p
	25-Nov-08	23.84	14.4	15.24	0.84	10.07	NS-p	NS-p	NS-p	NS-p	NS-p	NS-p	NS-p
	11-Mar-09	23.84	15.03	15.70	0.67	9.31	NS-p	NS-p	NS-p	NS-p	NS-p	NS-p	NS-p
	20-May-09	23.84	14.11	14.11	0.00	9.73	NS-p	NS-p	NS-p	NS-p	NS-p	NS-p	NS-p
	24-Sep-09	23.84	13.90	14.45	0.55	9.94	NS-p	NS-p	NS-p	NS-p	NS-p	NS-p	NS-p
	7-Dec-09	23.84	13.56	13.72	0.14	10.37	NS-p	NS-p	NS-p	NS-p	NS-p	NS-p	NS-p
	23-Feb-10	23.84	13.46	13.75	0.29	10.60	NS-p	NS-p	NS-p	NS-p	NS-p	NS-p	NS-p
	2-Jun-10	23.84	14.30	14.82	0.52	9.93	NS-p	NS-p	NS-p	NS-p	NS-p	NS-p	NS-p
	8-Sep-10	23.84	15.04	15.53	0.49	9.17	NS-p	NS-p	NS-p	NS-p	NS-p	NS-p	NS-p
	17-Nov-10	23.84	14.55	14.98	0.43	9.61	NS-p	NS-p	NS-p	NS-p	NS-p	NS-p	NS-p
	14-Mar-11	23.84	14.43	14.84	0.41	9.72	NS-p	NS-p	NS-p	NS-p	NS-p	NS-p	NS-p
	17-May-11	23.84	14.08	14.10	0.02	9.78	NS-p	NS-p	NS-p	NS-p	NS-p	NS-p	NS-p
	28-Sep-11	23.84	12.25	12.66	0.41	11.90	NS-p	NS-p	NS-p	NS-p	NS-p	NS-p	NS-p
	20-Oct-11	23.84	13.06	14.06	0.40	10.48	NS-p	NS-p	NS-p	NS-p	NS-p	NS-p	NS-p
N-5	27-Mar-06	27.56	NP	9.92	0.00	17.64	NS-g	NS-g	NS-g	NS-g	NS-g	NS-g	NS-g
	13-Jun-06	27.56	NP	9.02	0.00	18.54	NS-g	NS-g	NS-g	NS-g	NS-g	NS-g	NS-g
	21-Aug-06	27.56	NP	9.53	0.00	18.03	NS-g	NS-g	NS-g	NS-g	NS-g	NS-g	NS-g
	12-Dec-06	27.56	NP	9.35	0.00	18.21	NS-p	NS-p	NS-p	NS-p	NS-p	NS-p	NS-p
	9-Mar-07	27.56	NP	9.17	0.00	18.39	NS-g	NS-g	NS-g	NS-g	NS-g	NS-g	NS-g
	20-Jun-07	27.56	NP	9.30	0.00	18.26	NS-g	NS-g	NS-g	NS-g	NS-g	NS-g	NS-g
	21-Sep-07	27.56	NP	10.50	0.00	17.06	NS-g	NS-g	NS-g	NS-g	NS-g	NS-g	NS-g
	18-Dec-07	27.56	NP	9.42	0.00	18.14	NS-g	NS-g	NS-g	NS-g	NS-g	NS-g	NS-g
	6-Feb-08	27.56	NP	8.96	0.00	18.60	ND (0.5)	ND (0.5)	NS-g	NS-g	NS-g	NS-g	NS-g
	4-Jun-08	27.56	NP	8.95	0.00	18.61	NS-g	NS-g	NS-g	NS-g	NS-g	NS-g	NS-g
	29-Aug-08	27.56	NP	9.46	0.00	18.10	NS-g	NS-g	NS-g	NS-g	NS-g	NS-g	NS-g
	25-Nov-08	27.56	NP	9.12	0.00	18.44	NS-g	NS-g	NS-g	NS-g	NS-g	NS-g	NS-g
	11-Mar-09	27.56	NP	9.75	0.00	17.81	NS-g	NS-g	NS-g	NS-g	NS-g	NS-g	NS-g
	20-May-09	27.56	NP	9.08	0.00	18.48	NS-g	NS-g	NS-g	NS-g	NS-g	NS-g	NS-g
	24-Sep-09	27.56	NP	9.04	0.00	18.52	NS-g	NS-g	NS-g	NS-g	NS-g	NS-g	NS-g
	7-Dec-09	27.56	NP	8.83	0.00	18.73	NS-g	NS-g	NS-g	NS-g	NS-g	NS-g	NS-g
	23-Feb-10	27.56	NP	8.32	0.00	19.24	NS-g	NS-g	NS-g	NS-g	NS-g	NS-g	NS-g
	2-Jun-10	27.56	NP	9.41	0.00	18.15	NS-g	NS-g	NS-g	NS-g	NS-g	NS-g	NS-g
	6-Sep-10	27.56	NP	9.98	0.00	17.58	NS-g	NS-g	NS-g	NS-g	NS-g	NS-g	NS-g
	9-Nov-10	27.56	NP	9.30	0.00	18.26	NS-g	NS-g	NS-g	NS-g	NS-g	NS-g	NS-g
	14-Mar-11	27.56	NP	8.26	0.00	19.30	NS-g	NS-g	NS-g	NS-g	NS-g	NS-g	NS-g
	17-May-11	27.56	NP	14.67	0.00	12.89	NS-g	NS-g	NS-g	NS-g	NS-g	NS-g	NS-g
	28-Sep-11	27.56	NP	8.43	0.00	19.13	NS-g	NS-g	NS-g	NS-g	NS-g	NS-g	NS-g
	20-Oct-11	27.56	NP	9.32	0.00	18.24	NS-g	NS-g	NS-g	NS-g	NS-g	NS-g	NS-g

Table 1. Historical Groundwater Monitoring Data Summary
Post-Closure Monitoring
Sunoco, Inc (R&M)
Point Breeze Processing Area Land Treatment Unit

Aquaterra Technologies, Inc.

Well ID	Date	Casing Elevation (feet)	Depth to Product (feet)	Depth to Water (feet)	Product Thickness (feet)	Product Adjusted Groundwater Elevation (feet)	Benzene (µg/L)	Toluene (µg/L)	Oil & Grease (mg/L)	Total Chromium (mg/L)	Total Mercury (mg/L)	pH	Specific Conductance (umhos/cm)
N-10	27-Mar-06	21.06	NP	4.19	0.00	16.87	NS-g	NS-g	NS-g	NS-g	NS-g	NS-g	NS-g
	13-Jun-06	21.06	NP	3.58	0.00	17.48	NS-g	NS-g	NS-g	NS-g	NS-g	NS-g	NS-g
	21-Aug-06	21.06	NP	5.78	0.00	15.28	NS-g	NS-g	NS-g	NS-g	NS-g	NS-g	NS-g
	12-Dec-06	21.06	NP	4.98	0.00	16.08	NS-g	NS-g	NS-g	NS-g	NS-g	NS-g	NS-g
	9-Mar-07	21.06	NP	5.04	0.00	16.02	NS-g	NS-g	NS-g	NS-g	NS-g	NS-g	NS-g
	20-Jun-07	21.06	NP	4.89	0.00	16.17	NS-g	NS-g	NS-g	NS-g	NS-g	NS-g	NS-g
	21-Sep-07	21.06	NP	6.52	0.00	14.54	NS-g	NS-g	NS-g	NS-g	NS-g	NS-g	NS-g
	18-Dec-07	21.06	NP	4.77	0.00	16.29	NS-g	NS-g	NS-g	NS-g	NS-g	NS-g	NS-g
	6-Feb-08	21.06	NP	4.41	0.00	16.65	ND (0.5)	ND (0.5)	NS-g	NS-g	NS-g	NS-g	NS-g
	4-Jun-08	21.06	NP	3.94	0.00	17.12	NS-g	NS-g	NS-g	NS-g	NS-g	NS-g	NS-g
	29-Aug-08	21.06	NP	5.98	0.00	15.08	NS-g	NS-g	NS-g	NS-g	NS-g	NS-g	NS-g
	25-Nov-08	21.06	NP	5.53	0.00	15.53	NS-g	NS-g	NS-g	NS-g	NS-g	NS-g	NS-g
	11-Mar-09	21.06	NP	5.73	0.00	15.33	NS-g	NS-g	NS-g	NS-g	NS-g	NS-g	NS-g
	20-May-09	21.06	NP	4.35	0.00	16.71	NS-g	NS-g	NS-g	NS-g	NS-g	NS-g	NS-g
	24-Sep-09	21.06	NP	4.45	0.00	16.61	NS-g	NS-g	NS-g	NS-g	NS-g	NS-g	NS-g
	7-Dec-09	21.06	NP	3.41	0.00	17.65	NS-g	NS-g	NS-g	NS-g	NS-g	NS-g	NS-g
	23-Feb-10	21.06	NP	2.34	0.00	18.72	NS-g	NS-g	NS-g	NS-g	NS-g	NS-g	NS-g
	2-Jun-10	21.06	NP	5.45	0.00	15.61	NS-g	NS-g	NS-g	NS-g	NS-g	NS-g	NS-g
	8-Sep-10	21.06	NP	5.87	0.00	15.19	NS-g	NS-g	NS-g	NS-g	NS-g	NS-g	NS-g
	9-Nov-10	21.06	NP	4.79	0.00	16.27	NS-g	NS-g	NS-g	NS-g	NS-g	NS-g	NS-g
	14-Mar-11	21.06	NP	2.90	0.00	18.16	NS-g	NS-g	NS-g	NS-g	NS-g	NS-g	NS-g
	17-May-11	21.06	NP	4.82	0.00	16.24	NS-g	NS-g	NS-g	NS-g	NS-g	NS-g	NS-g
	28-Sep-11	21.06	NP	2.47	0.00	18.59	NS-g	NS-g	NS-g	NS-g	NS-g	NS-g	NS-g
	20-Oct-11	21.06	NP	4.04	0.00	17.02	NS-g	NS-g	NS-g	NS-g	NS-g	NS-g	NS-g
N-11	27-Mar-06	30.48	NP	18.82	0.00	11.66	6.5	8.2	<5.3	0.22	0.00045	6.75	1,100
	13-Jun-06	30.48	NP	18.28	0.00	12.20	8.1	9.7	<5.1	0.20	0.0003	6.4	930
	21-Aug-06	30.48	NP	19.78	0.00	10.70	7.4	<10	8.0	0.07	<0.00020	6.82	1,000
	12-Dec-06	30.48	NP	18.47	0.00	12.01	7.8	12	13.0	0.09	<0.00020	6.81	1,400
	9-Mar-07	30.48	NP	18.53	0.00	11.95	7.6	12	7.2	0.13	<0.00020	6.94	1,000
	20-Jun-07	30.48	NP	18.38	0.00	12.10	7	11	<5.0	0.11	<0.00020	6.8	1,190
	21-Sep-07	30.48	NP	19.15	0.00	11.33	8	11	9.4	0.02	<0.00020	6.8	1,410
	18-Dec-07	30.48	NP	18.74	0.00	11.74	7	12	5.2	0.0170	<0.00020	6.8	1,210
	6-Feb-08	30.48	NP	18.55	0.00	11.93	10	11	<5.0	0.1470	<0.00020	6.8	1,040
	4-Jun-08	30.48	NP	18.48	0.00	12.00	8	12	<5.0	0.0539	<0.00020	6.8	916
	29-Aug-08	30.48	NP	19.04	0.00	11.44	5	8	<5.0	0.4760	<0.0010	6.8	826
	25-Nov-08	30.48	NP	18.91	0.00	11.57	<20	<20	6.2	0.0548	<0.0010	6.8	814
	11-Mar-09	30.48	NP	18.98	0.00	11.50	<5	7	<5.0	0.0362	<0.0020	6.9	880
	20-May-09	30.48	NP	18.22	0.00	12.26	5	8	<5.0	0.0625	<0.0020	6.7	937
	24-Sep-09	30.48	NP	18.20	0.00	12.28	48	9	<5.0	<0.0150	<0.0020	6.9	1,120
	7-Dec-09	30.48	NP	18.37	0.00	12.11	4	6	<5.0	0.1090	<0.0020	6.7	1,540
	23-Feb-10	30.48	NP	17.69	0.00	12.79	4	8	<5.0	0.0894	<0.0020	7.13	1,910
	2-Jun-10	30.48	NP	18.57	0.00	11.91	4	7	<5.0	0.0960	<0.0020	6.7	2,350
	8-Sep-10	30.48	NP	18.94	0.00	11.54	3	5	<5.0	0.0593	<0.0020	6.7	1,040
	9-Nov-10	30.48	NP	18.63	0.00	11.85	2	5	<5.0	0.299	<0.0020	6.8	840
	14-Mar-11	30.48	NP	17.51	0.00	12.97	3	6	<5.0	0.0152	<0.0020	6.8	1,250
	17-May-11	30.48	NP	18.45	0.00	12.03	7	6	5.2	<0.0150	<0.0020	6.9	1,710
	28-Sep-11	30.48	NP	17.06	0.00	13.42	<10	<10	<5.0	<0.0150	<0.00020	6.7	662
	20-Oct-11	30.48	NP	18.02	0.00	12.46	5	5	<5.0	0.1390	<0.00020	6.9	806

Table 1. Historical Groundwater Monitoring Data Summary
Post-Closure Monitoring
Sunoco, Inc (R&M)
Point Breeze Processing Area Land Treatment Unit

Aquaterra Technologies, Inc.

Well ID	Date	Casing Elevation (feet)	Depth to Product (feet)	Depth to Water (feet)	Product Thickness (feet)	Product Adjusted Groundwater Elevation (feet)	Benzene (µg/L)	Toluene (µg/L)	Oil & Grease (mg/L)	Total Chromium (mg/L)	Total Mercury (mg/L)	pH	Specific Conductance (umhos/cm)
N-24	27-Mar-06	21.17	NP	12.56	0.00	8.61	NS-g	NS-g	NS-g	NS-g	NS-g	NS-g	NS-g
	13-Jun-06	21.17	NP	11.12	0.00	10.05	NS-g	NS-g	NS-g	NS-g	NS-g	NS-g	NS-g
	21-Aug-06	21.17	NP	12.37	0.00	8.80	NS-g	NS-g	NS-g	NS-g	NS-g	NS-g	NS-g
	12-Dec-06	21.17	NP	12.34	0.00	8.83	NS-g	NS-g	NS-g	NS-g	NS-g	NS-g	NS-g
	9-Mar-07	21.17	NP	12.06	0.00	9.11	NS-g	NS-g	NS-g	NS-g	NS-g	NS-g	NS-g
	20-Jun-07	21.17	NP	12.1	0.00	9.07	NS-g	NS-g	NS-g	NS-g	NS-g	NS-g	NS-g
	21-Sep-07	21.17	NP	12.42	0.00	8.75	NS-g	NS-g	NS-g	NS-g	NS-g	NS-g	NS-g
	18-Dec-07	21.17	NP	12.31	0.00	8.86	NS-g	NS-g	NS-g	NS-g	NS-g	NS-g	NS-g
	7-Feb-08	21.17	NP	12.02	0.00	9.15	0.08	ND (0.5)	NS-g	NS-g	NS-g	NS-g	NS-g
	4-Jun-08	21.17	NP	11.89	0.00	9.28	NS-g	NS-g	NS-g	NS-g	NS-g	NS-g	NS-g
	29-Aug-08	21.17	NP	12.33	0.00	8.84	NS-g	NS-g	NS-g	NS-g	NS-g	NS-g	NS-g
	25-Nov-08	21.17	NP	12.11	0.00	9.06	NS-g	NS-g	NS-g	NS-g	NS-g	NS-g	NS-g
	11-Mar-09	21.17	NP	12.22	0.00	8.95	NS-g	NS-g	NS-g	NS-g	NS-g	NS-g	NS-g
	20-May-09	21.17	NP	11.83	0.00	9.34	NS-g	NS-g	NS-g	NS-g	NS-g	NS-g	NS-g
	24-Sep-09	21.17	NP	12.22	0.00	8.95	NS-g	NS-g	NS-g	NS-g	NS-g	NS-g	NS-g
	7-Dec-09	21.17	NP	12.18	0.00	8.99	NS-g	NS-g	NS-g	NS-g	NS-g	NS-g	NS-g
	23-Feb-10	21.17	NP	10.63	0.00	10.54	NS-g	NS-g	NS-g	NS-g	NS-g	NS-g	NS-g
	2-Jun-10	21.17	NP	12.42	0.00	8.75	NS-g	NS-g	NS-g	NS-g	NS-g	NS-g	NS-g
	8-Sep-10	21.17	NP	12.26	0.00	8.91	NS-g	NS-g	NS-g	NS-g	NS-g	NS-g	NS-g
	9-Nov-10	21.17	NP	11.74	0.00	9.43	NS-g	NS-g	NS-g	NS-g	NS-g	NS-g	NS-g
	14-Mar-11	21.17	NP	10.88	0.00	10.29	NS-g	NS-g	NS-g	NS-g	NS-g	NS-g	NS-g
	17-May-11	21.17	NP	11.01	0.00	10.16	NS-g	NS-g	NS-g	NS-g	NS-g	NS-g	NS-g
	28-Sep-11	21.17	NP	10.81	0.00	10.36	NS-g	NS-g	NS-g	NS-g	NS-g	NS-g	NS-g
	20-Oct-11	21.17	NP	12.17	0.00	9.00	NS-g	NS-g	NS-g	NS-g	NS-g	NS-g	NS-g
N-77	27-Mar-06	20.74	NP	8.72	0.00	12.02	NS-g	NS-g	NS-g	NS-g	NS-g	NS-g	NS-g
	13-Jun-06	20.74	NP	6.25	0.00	14.49	NS-g	NS-g	NS-g	NS-g	NS-g	NS-g	NS-g
	21-Aug-06	20.74	NP	8.25	0.00	12.49	NS-g	NS-g	NS-g	NS-g	NS-g	NS-g	NS-g
	12-Dec-06	20.74	NP	7.89	0.00	12.85	NS-g	NS-g	NS-g	NS-g	NS-g	NS-g	NS-g
	9-Mar-07	20.74	NP	6.82	0.00	13.92	NS-g	NS-g	NS-g	NS-g	NS-g	NS-g	NS-g
	20-Jun-07	20.74	NP	7.74	0.00	13.00	NS-g	NS-g	NS-g	NS-g	NS-g	NS-g	NS-g
	21-Sep-07	20.74	NP	8.79	0.00	11.95	NS-g	NS-g	NS-g	NS-g	NS-g	NS-g	NS-g
	18-Dec-07	20.74	NP	7.32	0.00	13.42	NS-g	NS-g	NS-g	NS-g	NS-g	NS-g	NS-g
	7-Feb-08	20.74	NP	6.83	0.00	13.91	ND (0.5)	ND (0.5)	NS-g	NS-g	NS-g	NS-g	NS-g
	4-Jun-08	20.74	NP	NM	0.00	NM	NS-g	NS-g	NS-g	NS-g	NS-g	NS-g	NS-g
	29-Aug-08	20.74	NP	8.03	0.00	12.71	NS-g	NS-g	NS-g	NS-g	NS-g	NS-g	NS-g
	25-Nov-08	20.74	NP	7.12	0.00	13.62	NS-g	NS-g	NS-g	NS-g	NS-g	NS-g	NS-g
	11-Mar-09	20.74	NP	7.96	0.00	12.78	NS-g	NS-g	NS-g	NS-g	NS-g	NS-g	NS-g
	20-May-09	20.74	NP	6.52	0.00	14.22	NS-g	NS-g	NS-g	NS-g	NS-g	NS-g	NS-g
	24-Sep-09	20.74	NP	7.53	0.00	13.21	NS-g	NS-g	NS-g	NS-g	NS-g	NS-g	NS-g
	7-Dec-09	20.74	NP	NM	0.00	NM	NS-g	NS-g	NS-g	NS-g	NS-g	NS-g	NS-g
	23-Feb-10	20.74	NP	NM	0.00	NM	NS-g	NS-g	NS-g	NS-g	NS-g	NS-g	NS-g
	2-Jun-10	20.74	NP	8.36	0.00	12.38	NS-g	NS-g	NS-g	NS-g	NS-g	NS-g	NS-g
	8-Sep-10	20.74	NP	8.11	0.00	12.63	NS-g	NS-g	NS-g	NS-g	NS-g	NS-g	NS-g
	9-Nov-10	20.74	NP	6.50	0.00	14.24	NS-g	NS-g	NS-g	NS-g	NS-g	NS-g	NS-g
	14-Mar-11	20.47	NP	5.35	0.00	15.12	NS-g	NS-g	NS-g	NS-g	NS-g	NS-g	NS-g
	17-May-11	20.47	NP	8.05	0.00	12.42	NS-g	NS-g	NS-g	NS-g	NS-g	NS-g	NS-g
	28-Sep-11	20.47	NP	5.25	0.00	15.22	NS-g	NS-g	NS-g	NS-g	NS-g	NS-g	NS-g
	20-Oct-11	20.47	NP	7.93	0.00	12.54	NS-g	NS-g	NS-g	NS-g	NS-g	NS-g	NS-g

Table 1. Historical Groundwater Monitoring Data Summary
Post-Closure Monitoring
Sunoco, Inc (R&M)
Point Breeze Processing Area Land Treatment Unit

Aquaterra Technologies, Inc.

Well ID	Date	Casing Elevation (feet)	Depth to Product (feet)	Depth to Water (feet)	Product Thickness (feet)	Product Adjusted Groundwater Elevation (feet)	Benzene (µg/L)	Toluene (µg/L)	Oil & Grease (mg/L)	Total Chromium (mg/L)	Total Mercury (mg/L)	pH	Specific Conductance (umhos/cm)
N-83	27-Mar-06	23.73	NP	15.98	0.00	7.75	NS-g	NS-g	NS-g	NS-g	NS-g	NS-g	NS-g
	13-Jun-06	23.73	NP	15.37	0.00	8.36	NS-g	NS-g	NS-g	NS-g	NS-g	NS-g	NS-g
	21-Aug-06	23.73	NP	17.39	0.00	6.34	NS-g	NS-g	NS-g	NS-g	NS-g	NS-g	NS-g
	12-Dec-06	23.73	NP	6.30	0.00	17.43	NS-g	NS-g	NS-g	NS-g	NS-g	NS-g	NS-g
	9-Mar-07	23.73	NP	5.70	0.00	18.03	NS-g	NS-g	NS-g	NS-g	NS-g	NS-g	NS-g
	20-Jun-07	23.73	NP	5.78	0.00	17.95	NS-g	NS-g	NS-g	NS-g	NS-g	NS-g	NS-g
	21-Sep-07	23.73	NP	6.45	0.00	17.28	NS-g	NS-g	NS-g	NS-g	NS-g	NS-g	NS-g
	18-Dec-07	23.73	NP	5.19	0.00	18.54	NS-g	NS-g	NS-g	NS-g	NS-g	NS-g	NS-g
	6-Feb-08	23.73	NP	15.12	0.00	8.61	ND (0.5)	ND (0.5)	NS-g	NS-g	NS-g	NS-g	NS-g
	4-Jun-08	23.73	NP	5.47	0.00	18.26	NS-g	NS-g	NS-g	NS-g	NS-g	NS-g	NS-g
	29-Aug-08	23.73	NP	6.43	0.00	17.30	NS-g	NS-g	NS-g	NS-g	NS-g	NS-g	NS-g
	25-Nov-08	23.73	NP	15.56	0.00	8.17	NS-g	NS-g	NS-g	NS-g	NS-g	NS-g	NS-g
	11-Mar-09	23.73	NP	15.69	0.00	8.04	NS-g	NS-g	NS-g	NS-g	NS-g	NS-g	NS-g
	20-May-09	23.73	NP	15.31	0.00	8.42	NS-g	NS-g	NS-g	NS-g	NS-g	NS-g	NS-g
	24-Sep-09	23.73	NP	14.61	0.00	9.12	NS-g	NS-g	NS-g	NS-g	NS-g	NS-g	NS-g
	7-Dec-09	23.73	NP	14.79	0.00	8.94	NS-g	NS-g	NS-g	NS-g	NS-g	NS-g	NS-g
	23-Feb-10	23.73	NP	15.18	0.00	8.55	NS-g	NS-g	NS-g	NS-g	NS-g	NS-g	NS-g
	2-Jun-10	23.73	NP	15.25	0.00	8.48	NS-g	NS-g	NS-g	NS-g	NS-g	NS-g	NS-g
	8-Sep-10	23.73	NP	15.47	0.00	8.26	NS-g	NS-g	NS-g	NS-g	NS-g	NS-g	NS-g
	9-Nov-10	23.73	NP	15.44	0.00	8.29	NS-g	NS-g	NS-g	NS-g	NS-g	NS-g	NS-g
	14-Mar-11	23.73	NP	15.24	0.00	8.49	NS-g	NS-g	NS-g	NS-g	NS-g	NS-g	NS-g
	17-May-11	23.73	NP	15.22	0.00	8.51	NS-g	NS-g	NS-g	NS-g	NS-g	NS-g	NS-g
	28-Sep-11	23.73	NP	13.77	0.00	9.96	NS-g	NS-g	NS-g	NS-g	NS-g	NS-g	NS-g
	20-Oct-11	23.73	NP	14.64	0.00	9.09	NS-g	NS-g	NS-g	NS-g	NS-g	NS-g	NS-g
N-89	27-Mar-06	27.14	14.16	14.17	0.01	12.99	NS-g	NS-g	NS-g	NS-g	NS-g	NS-g	NS-g
	13-Jun-06	27.14	NM-I	NM-I	NM-I	NM-I	NG-I	NG-I	NG-I	NG-I	NG-I	NG-I	NG-I
	21-Aug-06	27.14	14.19	14.20	0.01	12.96	NS-g	NS-g	NS-g	NS-g	NS-g	NS-g	NS-g
	12-Dec-06	27.14	13.76	13.81	0.05	13.42	NS-g	NS-g	NS-g	NS-g	NS-g	NS-g	NS-g
	9-Mar-07	27.14	NM	NM	NM	NM	NS-g	NS-g	NS-g	NS-g	NS-g	NS-g	NS-g
	20-Jun-07	27.14	13.62	13.68	0.02	13.54	NS-g	NS-g	NS-g	NS-g	NS-g	NS-g	NS-g
	21-Sep-07	27.14	14.34	14.38	0.04	12.83	NS-g	NS-g	NS-g	NS-g	NS-g	NS-g	NS-g
	18-Dec-07	27.14	NP	14.47	0.00	12.67	NS-g	NS-g	NS-g	NS-g	NS-g	NS-g	NS-g
	6-Feb-08	27.14	NP	NM	NM	NM	NS-g	NS-g	NS-g	NS-g	NS-g	NS-g	NS-g
	4-Jun-08	27.14	NP	14.00	0.00	13.14	NS-g	NS-g	NS-g	NS-g	NS-g	NS-g	NS-g
	29-Aug-08	27.14	NP	14.18	0.00	12.96	NS-g	NS-g	NS-g	NS-g	NS-g	NS-g	NS-g
	25-Nov-08	27.14	NP	14.33	0.00	12.81	NS-g	NS-g	NS-g	NS-g	NS-g	NS-g	NS-g
	11-Mar-09	27.14	NP	14.29	0.00	12.85	NS-g	NS-g	NS-g	NS-g	NS-g	NS-g	NS-g
	20-May-09	27.14	NP	14.04	0.00	13.1	NS-g	NS-g	NS-g	NS-g	NS-g	NS-g	NS-g
	24-Sep-09	27.14	NP	NM	NM	NM	NS-g	NS-g	NS-g	NS-g	NS-g	NS-g	NS-g
	7-Dec-09	27.14	NP	damaged	NM	NM	NS-g	NS-g	NS-g	NS-g	NS-g	NS-g	NS-g
	23-Feb-10	27.14	NP	damaged	NM	NM	NS-g	NS-g	NS-g	NS-g	NS-g	NS-g	NS-g
	2-Jun-10	27.14	NP	damaged	NM	NM	NS-g	NS-g	NS-g	NS-g	NS-g	NS-g	NS-g
	8-Sep-10	27.14	NP	damaged	NM	NM	NS-g	NS-g	NS-g	NS-g	NS-g	NS-g	NS-g
	9-Nov-10	27.14	NP	damaged	NM	NM	NS-g	NS-g	NS-g	NS-g	NS-g	NS-g	NS-g
	14-Mar-11	27.14	NP	damaged	NM	NM	NS-g	NS-g	NS-g	NS-g	NS-g	NS-g	NS-g
	17-May-11	27.14	NP	damaged	NM	NM	NS-g	NS-g	NS-g	NS-g	NS-g	NS-g	NS-g
	28-Sep-11	27.14	NP	damaged	NM	NM	NS-g	NS-g	NS-g	NS-g	NS-g	NS-g	NS-g
	20-Oct-11	27.14	NP	damaged	NM	NM	NS-g	NS-g	NS-g	NS-g	NS-g	NS-g	NS-g

NS-g = Not Sampled, gauge only
NP = No Product
NM-I = Not Measured, inaccessible
NG-I = Not Gauged, inaccessible
NS-p = Not Sampled due to presence of product
Oil & Grease sample from MW-4 was resampled on 1-2-07 due to broken bottle ware during the original sampling event.
Liquid levels collected on 12 December 2006 and samples collected 13 December 2006.
1st Quarter 2008 samples collected on 6-Feb-08 for benzene and toluene, and on 23-Apr-08 for other compounds.
Bold values exceed the PADEP Statewide Health Standard MSCs.
N-89 - blockage in well at approximately 4' below casing.

Table 2. Surface Water Runoff Monitoring Data Summary
Closure Monitoring
Sunoco, Inc (R&M)
Point Breeze Processing Area Land Treatment Unit

Aquaterra Technologies, Inc.

Outfall Location	Date	Benzene (µg/L)	Toluene (µg/L)	Oil & Grease (mg/L)	Total Chromium (mg/L)	Total Mercury (mg/L)	pH	Specific Conductance (µmhos/cm)	Total Nitrate/ Nitrite Nitrogen (mg/L)	Total Suspended Solids (mg/L)	Biochemical Oxygen Demand (mg/L)
A	16-Nov-06	<500	<500	<5.0	0.261	0.00021	7.4	3,800	0.64	918	38.1
	16-Mar-07	<1.0	<1.0	26	0.64	0.0013	7.75	600	5.1	1,300	NA
	4-Jun-07	2.8	<1.0	<5.0	0.26	<0.00020	7.46	2,120	21	4,200	56
	27-Sep-07	<5	<5	10.8	0.161	<0.00020	8	1,500	0.42	7,700	61.5
	18-Dec-07	<50	<50	18.3	0.166	<0.00020	7.3	2,760	22.6	1,580	185
	7-Feb-08	<20	<20	5.2	0.0889	0.000047	7.5	4,370	3.6	640	30.9
	20-Mar-08	2	<1	<5.0	<0.0150	<0.00020	7.2	1,670	2.7	*<30.0	<7.3
	9-May-08	<10	<10	<5.0	<0.0150	<0.00020	7.6	2,520	16.7	131	49.2
	26-Sep-08	<10	<10	<5.0	0.0453	<0.00020	8.3	1,780	0.80	92	7.7
	25-Nov-08	<1	<1	<5.0	<0.0150	<0.00020	7.8	1,140	0.94	<12.0	6.6
	26-Mar-09	<20	<20	7.6	0.0203	0.00023	7.3	4,980	13.0	12.4	16.2
	15-May-09	<10	<10	<5.0	<0.0150	<0.00020	7.4	2,710	7.0	<12.0	<4.1
	24-Sep-09	3	<1	<5.0	<0.0150	<0.00020	7.8	2,230	<0.50	<24.0	36.9
	3-Dec-09	<1	<1	<5.0	0.0322	<0.00020	7.4	1,080	NA	51.3	11.8
	23-Feb-10	<1	<1	<5.0	<0.0150	<0.00020	7.4	354	0.68	71.2	<1.9
	28-May-10	<10	<10	6.9	<0.0150	<0.00020	8.3	2,340	<1.0	65.6	67.9
	17-Sep-10	<1	<1	<5.0	<0.0150	<0.00020	8.0	1,370	<1.0	30.0	32.8
	17-Nov-10	<10	<10	<5.0	<0.0150	<0.00020	7.9	1,870	1.8	<12.0	<2.8
	25-Feb-11	<1	<1	<5.0	<0.0150	<0.00020	7.4	439	1.3	54.0	<3.7
	17-May-11	<5	<5	<5.0	<0.0150	<0.00020	7.9	2,340	11.2	<12.0	<8.9
	18-Aug-11	<1	<1	<5.0	<0.0150	<0.00020	7.5	458	1.3	<12.0	<5.6
	17-Nov-11	<1	<1	<5.0	<0.0150	<0.00020	7.7	2,330	<0.10	<12.0	15.8
B	16-Nov-06	NS-I	NS-I	NS-I	NS-I	NS-I	NS-I	NS-I	NS-I	NS-I	NS-I
	16-Mar-07	<1.0	<1.0	<5.0	0.025	<0.00020	7.67	480	3.7	150	NA
	4-Jun-07	DRY	DRY	DRY	DRY	DRY	DRY	DRY	DRY	DRY	DRY
	27-Sep-07	DRY	DRY	DRY	DRY	DRY	DRY	DRY	DRY	DRY	DRY
	18-Dec-07	DRY	DRY	DRY	DRY	DRY	DRY	DRY	DRY	DRY	DRY
	7-Feb-08	DRY	DRY	DRY	DRY	DRY	DRY	DRY	DRY	DRY	DRY
	20-Mar-08	1	<1	<5.0	<0.0150	<0.00020	7.4	494	<0.10	355	<7.0
	9-May-08	DRY	DRY	DRY	DRY	DRY	DRY	DRY	DRY	DRY	DRY
	26-Sep-08	DRY	DRY	DRY	DRY	DRY	DRY	DRY	DRY	DRY	DRY
	25-Nov-08	DRY	DRY	DRY	DRY	DRY	DRY	DRY	DRY	DRY	DRY
	26-Mar-09	DRY	DRY	DRY	DRY	DRY	DRY	DRY	DRY	DRY	DRY
	15-May-09	DRY	DRY	DRY	DRY	DRY	DRY	DRY	DRY	DRY	DRY
	24-Sep-09	DRY	DRY	DRY	DRY	DRY	DRY	DRY	DRY	DRY	DRY
	3-Dec-09	DRY	DRY	DRY	DRY	DRY	DRY	DRY	DRY	DRY	DRY
	23-Feb-10	DRY	DRY	DRY	DRY	DRY	DRY	DRY	DRY	DRY	DRY
	28-May-10	DRY	DRY	DRY	DRY	DRY	DRY	DRY	DRY	DRY	DRY
	17-Sep-10	DRY	DRY	DRY	DRY	DRY	DRY	DRY	DRY	DRY	DRY
	17-Nov-10	DRY	DRY	DRY	DRY	DRY	DRY	DRY	DRY	DRY	DRY
	25-Feb-11	DRY	DRY	DRY	DRY	DRY	DRY	DRY	DRY	DRY	DRY
	17-May-11	DRY	DRY	DRY	DRY	DRY	DRY	DRY	DRY	DRY	DRY
	18-Aug-11	DRY	DRY	DRY	DRY	DRY	DRY	DRY	DRY	DRY	DRY
	17-Nov-11	DRY	DRY	DRY	DRY	DRY	DRY	DRY	DRY	DRY	DRY

Table 2. Surface Water Runoff Monitoring Data Summary
Closure Monitoring
Sunoco, Inc (R&M)
Point Breeze Processing Area Land Treatment Unit

Aquaterra Technologies, Inc.

Outfall Location	Date	Benzene (µg/L)	Toluene (µg/L)	Oil & Grease (mg/L)	Total Chromium (mg/L)	Total Mercury (mg/L)	pH	Specific Conductance (µmhos/cm)	Total Nitrate/ Nitrite Nitrogen (mg/L)	Total Suspended Solids (mg/L)	Biochemical Oxygen Demand (mg/L)
C	16-Nov-06	<50	<50	9	0.472	0.0014	7.8	3,390	1.2	2,210	20.3
	16-Mar-07	<1.0	<1.0	11	5.30	0.0039	7.83	1,000	8.5	6,500	NA
	4-Jun-07	<1.0	<1.0	20	0.59	0.0011	7.62	3,120	21	5,100	17
	27-Sep-07	<5	<5	16.3	3.84	<0.0010	7.8	2,170	0.52	17,200	190
	18-Dec-07	<20	<20	9.9	0.891	0.0006	7.5	3,780	16.3	5,650	41.1
	7-Feb-08	<20	<20	17.6	0.0765	0.00025	7.8	4,010	14.7	605	54.3
	20-Mar-08	<1	<1	<5.0	<0.0150	<0.00020	7.7	3,380	4.0	*<120	<7.4
	9-May-08	<1	<1	<5.0	<0.0150	<0.00020	7.3	2,970	6.0	29.0	6.1
	26-Sep-08	<10	<10	6.7	0.0593	<0.00020	8.1	1,920	0.63	118	7.7
	25-Nov-08	<10	<10	5.4	<0.0150	<0.00020	7.9	3,260	6.7	<12.0	4.3
	26-Mar-09	<10	<10	<5.0	<0.0150	<0.0010	7.8	4,390	15.0	<12.0	<11.3
	15-May-09	<10	<10	<5.0	<0.0150	<0.00020	7.3	2,450	7.0	<12.0	8.6
	24-Sep-09	<1	<1	5.2	<0.0150	<0.00020	7.9	3,430	1.9	<12.0	<2.2
	3-Dec-09	<1	<1	<5.0	<0.0150	<0.00020	7.5	1,410	NA	17.2	8.5
	23-Feb-10	<1	<1	<5.0	<0.0150	<0.00020	7.73	246	0.19	27.6	<2.2
	28-May-10	<10	<10	10.5	<0.0150	<0.00020	7.4	3,230	<1.0	<30.0	416
	17-Sep-10	<1	<1	<5.0	<0.0150	<0.00020	8.1	2,080	<1.0	<12.0	21.1
	17-Nov-10	<10	<10	<5.0	<0.0150	<0.00020	7.8	3,350	<0.50	49.2	7.5
	25-Feb-11	<1	<1	<5.0	<0.0150	<0.00020	7.3	469	1.2	<12.0	<3.5
	17-May-11	<5	<5	<5.0	<0.0150	<0.00020	7.7	3,120	10.9	<12.0	<9.8
	18-Aug-11	<1	<1	<5.0	<0.0150	<0.00020	7.4	905	5.0	<12.0	<5.0
	17-Nov-11	<1	<1	<5.0	<0.0150	<0.00020	7.6	3,560	3.9	24.8	<5.7
D	16-Nov-06	<500	<500	6.6	0.580	0.00047	7.3	4,330	0.39	3,370	51.6
	16-Mar-07	<1.0	<1.0	<5.0	2.90	0.0061	7.75	640	12	3,300	NA
	4-Jun-07	<1.0	<1.0	8.1	0.69	0.00061	7.28	1,620	6.9	6,000	16
	27-Sep-07	<5	<5	7.2	0.25	<0.0020	8.1	2,490	0.77	843	16.2
	18-Dec-07	<100	<100	6.4	0.0493	<0.0020	7.4	4,550	6.3	360	47.2
	7-Feb-08	<20	<20	19.9	0.245	0.00099	7.4	4,750	6.1	1,260	51.0
	20-Mar-08	<1	<1	<5.0	0.0431	0.00026	7.7	2,250	1.6	*<75.0	<11.0
	9-May-08	<1	<1	<5.0	<0.0150	<0.00020	7.3	4,270	0.44	44.6	27.7
	26-Sep-08	<10	<10	6.7	0.0593	<0.00020	8.1	1,920	0.63	118	13.4
	25-Nov-08	<10	<10	10.1	0.0178	<0.00020	7.6	3,580	14.4	<12.0	<5.0
	26-Mar-09	ND (10)	ND (10)	ND (1.4)	0.0291	0.00013 J	7.1	5,690	1.6	143	8.2
	15-May-09	<10	<10	<5.0	<0.0150	<0.00020	7.5	2,410	2.4	18.4	60.2
	24-Sep-09	<10	<10	7.7	0.0325	<0.00020	7.2	4,980	4.3	34.0	16.4
	3-Dec-09	<1	<1	<5.0	<0.0150	<0.00020	7.5	1,450	NA	50.7	44.4
	23-Feb-10	<1	<1	<5.0	<0.0150	<0.00020	7.9	225	<0.10	<12.0	<1.9
	28-May-10	<10	<10	<5.0	0.0295	<0.00020	7.3	4,410	4.7	71.0	73.3
	17-Sep-10	<10	<10	<5.0	<0.0150	<0.00020	7.8	1,880	1.1	<12.0	11.4
	17-Nov-10	<10	<10	6.2	0.0184	<0.00020	7.5	3,640	4.2	20.0	22.0
	25-Feb-11	<1	<1	<5.0	<0.0150	<0.00020	7.5	364	<0.10	<12.0	<3.5
	17-May-11	<5	<5	<5.0	0.0208	<0.00020	7.8	3,330	16.3	12.8	50.0
	18-Aug-11	<1	<1	<5.0	<0.0150	<0.00020	7.6	439	1.6	<12.0	<4.9
	17-Nov-11	<1	<1	5.1	0.0167	<0.00020	7.6	3,530	3.9	24.4	41.1

Table 2. Surface Water Runoff Monitoring Data Summary
Closure Monitoring
Sunoco, Inc (R&M)
Point Breeze Processing Area Land Treatment Unit

Aquaterra Technologies, Inc.

Outfall Location	Date	Benzene (µg/L)	Toluene (µg/L)	Oil & Grease (mg/L)	Total Chromium (mg/L)	Total Mercury (mg/L)	pH	Specific Conductance (µmhos/cm)	Total Nitrate/ Nitrite Nitrogen (mg/L)	Total Suspended Solids (mg/L)	Biochemical Oxygen Demand (mg/L)
E	16-Nov-06	<20	<20	10.2	0.139	0.0037	7.9	1,980	1.1	3,570	38.1
	16-Mar-07	<1.0	<1.0	90	2.6	0.0074	8.39	500	11	2,400	NA
	4-Jun-07	1.1	<1.0	8.3	2.2	0.0054	7.59	949	27	6,900	52
	27-Sep-07	<5	<5	51.8	0.4	<0.0020	8.1	981	1.0	2,380	22.7
	18-Dec-07	<20	<20	21.9	4.72	0.0018	7.8	2,550	3.9	1,120	21.3
	7-Feb-08	<10	<10	10.6	0.682	0.00062	8.0	2,540	5.4	94.4	14.1
	20-Mar-08	<1	<1	<5.0	<0.0150	<0.00020	7.6	1,020	1.1	*<60.0	<2.9
	9-May-08	<1	<1	<5.0	<0.0150	<0.00020	7.4	1,940	0.18	71.6	4.8
	26-Sep-08	<10	<10	<5.0	0.0228	<0.00020	8.2	1,000	0.71	529	13.0
	25-Nov-08	<10	<10	5.6	<0.0150	<0.00020	8.3	3,470	1.6	<12.0	<5.4
	26-Mar-09	<1	<1	<5.0	<0.0150	<0.00020	8.1	3,190	4.2	<12.0	<5.0
	15-May-09	<10	<10	<5.0	<0.0150	<0.00020	7.7	935	0.29	<12.0	<2.9
	24-Sep-09	<1	<1	<5.0	<0.0150	<0.00020	8.1	2,290	<0.10	<12.0	11.7
	3-Dec-09	<1	<1	<5.0	<0.0150	<0.00020	7.7	688	NA	43.0	<3.0
	23-Feb-10	<1	<1	<5.0	<0.0150	<0.00020	7.99	188	<0.10	<12.0	<2.6
	28-May-10	<5	6	6.2	<0.0150	<0.00020	7.8	1,500	<1.0	23.6	13.8
	17-Sep-10	<1	<1	<5.0	<0.0150	<0.00020	7.9	1,430	<1.0	<12.0	11.7
	17-Nov-10	<10	<10	<5.0	<0.0150	<0.00020	8.1	1,930	1.1	<12.0	<4.3
	25-Feb-11	<1	<1	<5.0	<0.0150	<0.00020	7.3	448	0.24	<12.0	<2.7
	17-May-11	<1	<1	<5.0	<0.0150	<0.00020	8.0	1,620	1.5	<12.0	<5.1
	18-Aug-11	<1	<1	<5.0	<0.0150	<0.00020	7.4	637	<0.50	<12.0	<4.4
	17-Nov-11	<1	<1	<5.0	<0.0150	<0.00020	7.7	2,140	<0.10	19.2	13.8
F	16-Nov-06	<50	<50	<5.0	0.0272	<0.00020	7.9	2,920	1.2	107	44.9
	16-Mar-07	<1.0	<1.0	<5.0	1.6	0.0066	7.75	500	15	650	NA
	4-Jun-07	<1.0	<1.0	-	0.17	0.0004	7.66	1,330	18	250	12
	27-Sep-07	<5	<5	9.3	0.149	<0.00020	8	1,310	0.29	489	39.9
	18-Dec-07	<20	<20	8.8	0.13	<0.00020	7.5	2,720	5.8	110	<9.0
	7-Feb-08	<10	<10	7.2	0.0232	<0.00020	7.8	3,120	6.7	86.4	11.1
	20-Mar-08	<1	<1	<5.0	<0.0150	<0.00020	7.6	1,300	1.8	*<20.0	<5.5
	9-May-08	<1	<1	<5.0	<0.0150	<0.00020	7.6	2,390	2.2	14.4	4.9
	26-Sep-08	<10	<10	<5.0	<0.0150	<0.00020	8.1	1,010	0.93	112	8.3
	25-Nov-08	<1	<1	5.4	<0.0150	<0.00020	7.8	2,530	0.44	<12.0	<9.1
	26-Mar-09	<1	<1	<5.0	<0.0150	<0.00020	8.0	3,830	12.9	<12.0	<5.5
	15-May-09	<10	<10	<5.0	<0.0150	<0.00020	7.6	1,170	0.55	<12.0	<2.5
	24-Sep-09	<1	<1	<5.0	<0.0150	<0.00020	7.1	2,640	<0.10	<17.2	89.3
	3-Dec-09	<1	<1	<5.0	<0.0150	<0.00020	7.6	869	NA	<12.0	<4.3
	23-Feb-10	<1	<1	<5.0	<0.0150	<0.00020	8.2	214	<0.10	<12.0	<2.0
	28-May-10	<5	<5	<5.0	<0.0150	<0.00020	7.9	1,310	<1.0	20.8	19.5
	17-Sep-10	<1	<1	<5.0	<0.0150	<0.00020	7.7	1,420	<1.0	<12.0	22.1
	17-Nov-10	<10	<10	<5.0	<0.0150	<0.00020	7.7	2,930	5.5	<12.0	<4.4
	25-Feb-11	<1	<1	<5.0	<0.0150	<0.00020	7.3	513	<0.10	<12.0	<2.3
	17-May-11	<1	<1	<5.0	<0.0150	<0.00020	7.8	1,910	5.2	<12.0	<5.1
	18-Aug-11	<1	<1	<5.0	<0.0150	<0.00020	7.3	714	<0.50	<12.0	<4.0
	17-Nov-11	<1	<1	<5.0	<0.0150	<0.00020	7.6	2,500	1.0	<12.0	<8.4

Table 2. Surface Water Runoff Monitoring Data Summary
Closure Monitoring
Sunoco, Inc (R&M)
Point Breeze Processing Area Land Treatment Unit

Aquaterra Technologies, Inc.

Outfall Location	Date	Benzene (µg/L)	Toluene (µg/L)	Oil & Grease (mg/L)	Total Chromium (mg/L)	Total Mercury (mg/L)	pH	Specific Conductance (µmhos/cm)	Total Nitrate/ Nitrite Nitrogen (mg/L)	Total Suspended Solids (mg/L)	Biochemical Oxygen Demand (mg/L)
G/H	16-Nov-06	NS-dry	NS-dry	NS-dry	NS-dry	NS-dry	NS-dry	NS-dry	NS-dry	NS-dry	NS-dry
	16-Mar-07	<1.0	<1.0	<5.0	<0.0050	<0.00020	7.61	700	1.4	20	NA
	4-Jun-07	DRY	DRY	DRY	DRY	DRY	DRY	DRY	DRY	DRY	DRY
	27-Sep-07	DRY	DRY	DRY	DRY	DRY	DRY	DRY	DRY	DRY	DRY
	18-Dec-07	DRY	DRY	DRY	DRY	DRY	DRY	DRY	DRY	DRY	DRY
	7-Feb-08	DRY	DRY	DRY	DRY	DRY	DRY	DRY	DRY	DRY	DRY
	20-Mar-08	DRY	DRY	DRY	DRY	DRY	DRY	DRY	DRY	DRY	DRY
	9-May-08	DRY	DRY	DRY	DRY	DRY	DRY	DRY	DRY	DRY	DRY
	26-Sep-08	DRY	DRY	DRY	DRY	DRY	DRY	DRY	DRY	DRY	DRY
	25-Nov-08	DRY	DRY	DRY	DRY	DRY	DRY	DRY	DRY	DRY	DRY
	26-Mar-09	DRY	DRY	DRY	DRY	DRY	DRY	DRY	DRY	DRY	DRY
	15-May-09	DRY	DRY	DRY	DRY	DRY	DRY	DRY	DRY	DRY	DRY
	24-Sep-09	DRY	DRY	DRY	DRY	DRY	DRY	DRY	DRY	DRY	DRY
	3-Dec-09	DRY	DRY	DRY	DRY	DRY	DRY	DRY	DRY	DRY	DRY
	23-Feb-10	DRY	DRY	DRY	DRY	DRY	DRY	DRY	DRY	DRY	DRY
	28-May-10	DRY	DRY	DRY	DRY	DRY	DRY	DRY	DRY	DRY	DRY
	17-Sep-10	DRY	DRY	DRY	DRY	DRY	DRY	DRY	DRY	DRY	DRY
	17-Nov-10	DRY	DRY	DRY	DRY	DRY	DRY	DRY	DRY	DRY	DRY
	25-Feb-11	DRY	DRY	DRY	DRY	DRY	DRY	DRY	DRY	DRY	DRY
	17-May-11	DRY	DRY	DRY	DRY	DRY	DRY	DRY	DRY	DRY	DRY
	18-Aug-11	DRY	DRY	DRY	DRY	DRY	DRY	DRY	DRY	DRY	DRY
	17-Nov-11	DRY	DRY	DRY	DRY	DRY	DRY	DRY	DRY	DRY	DRY
Water Quality Criteria:		ND	ND	11	0.24	0.002	6.0-9.0	1,000,000	5	30	40
Detection Limits:		5	5	0.2	<0.01	<0.005	-	-	-	-	-

NS-I = Not sampled, inaccessible
NS-dry = Not sampled, dry
Water Quality Criteria and Detection Limits are established by the Sunoco, Inc (R&M) Ammended Closure Plan (original date November 1988, ammended November 2002 and May 2004), in Tables CP-2 and CP-3, respectively.
Post Closure Requirements include: Oil&Grease, pH, Specific Conductance, Chromium, Mercury, Benzene and Toluene.
Bolded values are outside the established Water Quality Criteria.
*Reporting Limit was increased due to insufficient sample volume.
If LOQ (limit of quantitation) for benzene and toluene is greater than one, it is typically due to sample foaming. If the dilution factor is greater than 20, the data is generally reported to the method detection limit (MDL).

Table 1. Historical Groundwater Monitoring Data Summary
Post-Closure Monitoring
Sunoco, Inc (R&M)
Point Breeze Processing Area Land Treatment Unit

Aquaterra Technologies, Inc.

Well ID	Date	Casing Elevation (feet)	Depth to Product (feet)	Depth to Water (feet)	Product Thickness (feet)	Product Adjusted Groundwater Elevation (feet)	Benzene (µg/L)	Toluene (µg/L)	Oil & Grease (mg/L)	Total Chromium (mg/L)	Total Mercury (mg/L)	pH	Specific Conductance (umhos/cm)
MW-4	27-Mar-06	25.20	NP	16.48	0.00	8.72	<1.0	<5.0	<5.3	<0.0050	<0.00020	6.75	1,700
(N-69)	13-Jun-06	25.20	NP	15.55	0.00	9.65	<1.0	<5.0	<5.0	<0.0050	<0.00020	6.42	1,700
	21-Aug-06	25.20	NP	15.41	0.00	9.79	<1.0	<5.0	<5.2	<0.0050	<0.00020	6.9	1,700
	12-Dec-06	25.20	NP	14.77	0.00	10.43	<1.0	<1.0	5.0	<0.0050	<0.00020	6.92	2,000
	9-Mar-07	25.20	NP	15.85	0.00	9.35	<1.0	<1.0	<5.0	<0.0050	<0.00020	7.07	1,600
	20-Jun-07	25.20	NP	14.61	0.00	10.59	<1.0	<1.0	<5.0	<0.0150	<0.00020	7.2	1,560
	21-Sep-07	25.20	NP	15.62	0.00	9.58	<1	<1	<5.0	<0.0150	<0.00020	7.0	1,640
	18-Dec-07	25.20	NP	16.20	0.00	9.00	<1	<1	<5.0	<0.0150	<0.00020	6.8	1,650
	6-Feb-08	25.20	NP	16.02	0.00	9.18	ND (0.5)	ND (0.5)	<5.0	<0.0020	<0.00020	7.1	1,690
	4-Jun-08	25.20	NP	15.25	0.00	9.95	<1	<1	<5.0	<0.0150	<0.00020	7	1,680
	29-Aug-08	25.20	NP	15.78	0.00	9.42	<1	<1	<5.0	<0.0150	<0.00020	7.1	1,540
	25-Nov-08	25.20	NP	15.70	0.00	9.50	<1	<1	<5.0	<0.0150	<0.00020	6.9	1,470
	11-Mar-09	25.20	NP	15.64	0.00	9.56	<1	<1	<5.0	<0.0150	<0.00020	7.1	1,550
	20-May-09	25.20	NP	15.14	0.00	10.06	<1	<1	<5.0	<0.0150	<0.00020	7.1	1,530
	24-Sep-09	25.20	NP	14.06	0.00	11.14	54	3	<5.0	<0.0150	<0.00020	7.3	1,560
	7-Dec-09	25.20	NP	14.72	0.00	10.48	<1	<1	<5.0	<0.0150	<0.00020	7.6	1,490
	23-Feb-10	25.20	NP	14.82	0.00	10.38	<1	<1	<5.0	<0.0150	<0.00020	8.1	1,440
	2-Jun-10	25.20	NP	14.69	0.00	10.51	<1	<1	<5.0	<0.0150	<0.00020	7.6	1,540
	8-Sep-10	25.20	NP	15.29	0.00	9.91	<1	<1	<5.0	<0.0150	<0.00020	7.5	1,440
	9-Nov-10	25.20	NP	15.34	0.00	9.86	<1	<1	<5.0	<0.0150	<0.00020	7.4	1,570
	14-Mar-11	25.20	NP	15.60	0.00	9.60	<1	<1	<5.0	<0.0150	<0.00020	7.0	1,680
	17-May-11	25.20	NP	15.14	0.00	10.06	<1	<1	<5.0	<0.0150	<0.00020	7.2	1,730
	28-Sep-11	25.20	NP	13.06	0.00	12.14	<1	<1	<5.0	<0.0150	<0.00020	6.9	1,730
	20-Oct-11	25.20	NP	13.97	0.00	11.23	<1	<1	<5.0	<0.0150	<0.00020	7.2	1,580
MW-5	27-Mar-06	24.20	NP	15.66	0.00	8.54	<1.0	<5.0	<5.3	<0.0050	<0.00020	7.03	1,200
(N-70)	13-Jun-06	24.20	NP	15.03	0.00	9.17	<1.0	<5.0	<5.0	<0.0050	<0.00020	6.44	1,300
	21-Aug-06	24.20	NP	14.97	0.00	9.23	<1.0	<5.0	<5.3	<0.0050	<0.00020	7.31	920
	12-Dec-06	24.20	NP	14.40	0.00	9.80	<1.0	<1.0	<5.0	<0.0050	<0.00020	7.18	1,100
	9-Mar-07	24.20	NP	15.36	0.00	8.84	<1.0	<1.0	<5.0	<0.0050	<0.00020	7.13	1,300
	20-Jun-07	24.20	NP	14.37	0.00	9.83	<1.0	<1.0	<5.0	<0.0150	<0.00020	7.0	1,050
	21-Sep-07	24.20	NP	15.21	0.00	8.99	<1	<1	<5.0	<0.0150	<0.00020	6.9	1,220
	18-Dec-07	24.20	NP	15.70	0.00	8.50	<1	<1	<5.0	<0.0150	<0.00020	7.0	1,100
	6-Feb-08	24.20	NP	15.55	0.00	8.65	ND (0.5)	ND (0.5)	<5.0	<0.0020	<0.00020	7.1	1,180
	4-Jun-08	24.20	NP	13.83	0.00	10.37	<1	<1	<5.0	<0.0150	<0.00020	7	1,140
	29-Aug-08	24.20	NP	15.23	0.00	8.97	<1	<1	<5.0	<0.0150	<0.00020	6.8	1,330
	25-Nov-08	24.20	NP	15.11	0.00	9.09	<1	<1	<5.0	<0.0150	<0.00020	6.9	1,080
	11-Mar-09	24.20	NP	15.18	0.00	9.02	<1	<1	<5.0	<0.0150	<0.00020	7.1	1,190
	20-May-09	24.20	NP	14.65	0.00	9.55	<1	<1	<5.0	<0.0150	<0.00020	7.1	1,060
	24-Sep-09	24.20	NP	13.73	0.00	10.47	12	1	<5.0	<0.0150	<0.00020	7.4	986
	7-Dec-09	24.20	NP	14.28	0.00	9.92	<1	<1	<5.0	<0.0150	<0.00020	7.5	863
	23-Feb-10	24.20	NP	14.47	0.00	9.73	<1	<1	<5.0	<0.0150	<0.00020	7.8	1,030
	2-Jun-10	24.20	NP	14.52	0.00	9.68	<1	<1	<5.0	<0.0150	<0.00020	7.1	1,250
	8-Sep-10	24.20	NP	14.86	0.00	9.34	<1	<1	<5.0	<0.0150	<0.00020	7.1	1,010
	9-Nov-10	24.20	NP	14.87	0.00	9.33	<1	<1	<5.0	<0.0150	<0.00020	7.2	1,070
	14-Mar-11	24.20	NP	15.01	0.00	9.19	<1	<1	<5.0	<0.0150	<0.00020	7.1	1,230
	17-May-11	24.20	NP	14.67	0.00	9.53	<1	<1	<5.0	<0.0150	<0.00020	7.1	1,270
	28-Sep-11	24.20	NP	12.81	0.00	11.39	<1	<1	<5.0	<0.0150	<0.00020	6.7	1,470
	20-Oct-11	24.20	NP	13.77	0.00	10.43	<1	<1	<5.0	<0.0150	<0.00020	6.9	1,390

Table 1. Historical Groundwater Monitoring Data Summary
Post-Closure Monitoring
Sunoco, Inc (R&M)
Point Breeze Processing Area Land Treatment Unit

Aquaterra Technologies, Inc.

Well ID	Date	Casing Elevation (feet)	Depth to Product (feet)	Depth to Water (feet)	Product Thickness (feet)	Product Adjusted Groundwater Elevation (feet)	Benzene (µg/L)	Toluene (µg/L)	Oil & Grease (mg/L)	Total Chromium (mg/L)	Total Mercury (mg/L)	pH	Specific Conductance (umhos/cm)
MW-6 (RW-300)	27-Mar-06	23.84	15.59	15.66	0.07	8.30	35	<5.0	37	<0.0050	<0.00020	9.43	6,900
	13-Jun-06	23.84	17.01	18.28	1.27	7.78	9.3	6.5	12	<0.0050	<0.00020	6.28	1,700
	21-Aug-06	23.84	17.19	18.31	1.12	7.49	9.8	7.4	<5.3	<0.0050	<0.00020	6.74	1,700
	12-Dec-06	23.84	14.69	17.55	2.86	11.30	NS-p	NS-p	NS-p	NS-p	NS-p	NS-p	NS-p
	9-Mar-07	23.84	14.87	15.51	0.64	8.81	NS-p	NS-p	NS-p	NS-p	NS-p	NS-p	NS-p
	20-Jun-07	23.84	17.44	17.79	0.35	6.62	NS-p	NS-p	NS-p	NS-p	NS-p	NS-p	NS-p
	21-Sep-07	23.84	8.02	8.07	0.05	15.86	NS-p	NS-p	NS-p	NS-p	NS-p	NS-p	NS-p
	18-Dec-07	23.84	18.13	18.31	0.18	5.85	NS-p	NS-p	NS-p	NS-p	NS-p	NS-p	NS-p
	6-Feb-08	23.84	18.21	18.29	0.08	5.69	NS-p	NS-p	NS-p	NS-p	NS-p	NS-p	NS-p
	4-Jun-08	23.84	NM	NM	NM	NM	NS-p	NS-p	NS-p	NS-p	NS-p	NS-p	NS-p
	29-Aug-08	23.84	15.94	16.95	1.01	8.66	NS-p	NS-p	NS-p	NS-p	NS-p	NS-p	NS-p
	25-Nov-08	23.84	14.4	15.24	0.84	10.07	NS-p	NS-p	NS-p	NS-p	NS-p	NS-p	NS-p
	11-Mar-09	23.84	15.03	15.70	0.67	9.31	NS-p	NS-p	NS-p	NS-p	NS-p	NS-p	NS-p
	20-May-09	23.84	14.11	14.11	0.00	9.73	NS-p	NS-p	NS-p	NS-p	NS-p	NS-p	NS-p
	24-Sep-09	23.84	13.90	14.45	0.55	9.94	NS-p	NS-p	NS-p	NS-p	NS-p	NS-p	NS-p
	7-Dec-09	23.84	13.58	13.72	0.14	10.37	NS-p	NS-p	NS-p	NS-p	NS-p	NS-p	NS-p
	23-Feb-10	23.84	13.46	13.75	0.29	10.60	NS-p	NS-p	NS-p	NS-p	NS-p	NS-p	NS-p
	2-Jun-10	23.84	14.30	14.82	0.52	9.93	NS-p	NS-p	NS-p	NS-p	NS-p	NS-p	NS-p
	8-Sep-10	23.84	15.04	15.53	0.49	9.17	NS-p	NS-p	NS-p	NS-p	NS-p	NS-p	NS-p
	17-Nov-10	23.84	14.55	14.98	0.43	9.61	NS-p	NS-p	NS-p	NS-p	NS-p	NS-p	NS-p
	14-Mar-11	23.84	14.43	14.84	0.41	9.72	NS-p	NS-p	NS-p	NS-p	NS-p	NS-p	NS-p
	17-May-11	23.84	14.08	14.10	0.02	9.78	NS-p	NS-p	NS-p	NS-p	NS-p	NS-p	NS-p
	28-Sep-11	23.84	12.25	12.66	0.41	11.90	NS-p	NS-p	NS-p	NS-p	NS-p	NS-p	NS-p
	20-Oct-11	23.84	13.68	14.08	0.40	10.48	NS-p	NS-p	NS-p	NS-p	NS-p	NS-p	NS-p
N-5	27-Mar-06	27.56	NP	9.92	0.00	17.64	NS-g	NS-g	NS-g	NS-g	NS-g	NS-g	NS-g
	13-Jun-06	27.56	NP	9.02	0.00	18.54	NS-g	NS-g	NS-g	NS-g	NS-g	NS-g	NS-g
	21-Aug-06	27.56	NP	9.53	0.00	18.03	NS-g	NS-g	NS-g	NS-g	NS-g	NS-g	NS-g
	12-Dec-06	27.56	NP	9.35	0.00	18.21	NS-p	NS-p	NS-p	NS-p	NS-p	NS-p	NS-p
	9-Mar-07	27.56	NP	9.17	0.00	18.39	NS-g	NS-g	NS-g	NS-g	NS-g	NS-g	NS-g
	20-Jun-07	27.56	NP	9.30	0.00	18.26	NS-g	NS-g	NS-g	NS-g	NS-g	NS-g	NS-g
	21-Sep-07	27.56	NP	10.50	0.00	17.06	NS-g	NS-g	NS-g	NS-g	NS-g	NS-g	NS-g
	18-Dec-07	27.56	NP	9.42	0.00	18.14	NS-g	NS-g	NS-g	NS-g	NS-g	NS-g	NS-g
	6-Feb-08	27.56	NP	8.96	0.00	18.60	ND (0.5)	ND (0.5)	NS-g	NS-g	NS-g	NS-g	NS-g
	4-Jun-08	27.56	NP	8.95	0.00	18.61	NS-g	NS-g	NS-g	NS-g	NS-g	NS-g	NS-g
	29-Aug-08	27.56	NP	9.46	0.00	18.10	NS-g	NS-g	NS-g	NS-g	NS-g	NS-g	NS-g
	25-Nov-08	27.56	NP	9.12	0.00	18.44	NS-g	NS-g	NS-g	NS-g	NS-g	NS-g	NS-g
	11-Mar-09	27.56	NP	9.75	0.00	17.81	NS-g	NS-g	NS-g	NS-g	NS-g	NS-g	NS-g
	20-May-09	27.56	NP	9.08	0.00	18.48	NS-g	NS-g	NS-g	NS-g	NS-g	NS-g	NS-g
	24-Sep-09	27.56	NP	9.04	0.00	18.52	NS-g	NS-g	NS-g	NS-g	NS-g	NS-g	NS-g
	7-Dec-09	27.56	NP	8.83	0.00	18.73	NS-g	NS-g	NS-g	NS-g	NS-g	NS-g	NS-g
	23-Feb-10	27.56	NP	8.32	0.00	19.24	NS-g	NS-g	NS-g	NS-g	NS-g	NS-g	NS-g
	2-Jun-10	27.56	NP	9.41	0.00	18.15	NS-g	NS-g	NS-g	NS-g	NS-g	NS-g	NS-g
	8-Sep-10	27.56	NP	9.98	0.00	17.58	NS-g	NS-g	NS-g	NS-g	NS-g	NS-g	NS-g
	9-Nov-10	27.56	NP	9.30	0.00	18.26	NS-g	NS-g	NS-g	NS-g	NS-g	NS-g	NS-g
	14-Mar-11	27.56	NP	8.26	0.00	19.30	NS-g	NS-g	NS-g	NS-g	NS-g	NS-g	NS-g
	17-May-11	27.56	NP	14.67	0.00	12.89	NS-g	NS-g	NS-g	NS-g	NS-g	NS-g	NS-g
	28-Sep-11	27.56	NP	8.43	0.00	19.13	NS-g	NS-g	NS-g	NS-g	NS-g	NS-g	NS-g
	20-Oct-11	27.56	NP	9.32	0.00	18.24	NS-g	NS-g	NS-g	NS-g	NS-g	NS-g	NS-g

Table 1. Historical Groundwater Monitoring Data Summary
Post-Closure Monitoring
Sunoco, Inc (R&M)
Point Breeze Processing Area Land Treatment Unit

Aquaterra Technologies, Inc.

Well ID	Date	Casing Elevation (feet)	Depth to Product (feet)	Depth to Water (feet)	Product Thickness (feet)	Product Adjusted Groundwater Elevation (feet)	Benzene (µg/L)	Toluene (µg/L)	Oil & Grease (mg/L)	Total Chromium (mg/L)	Total Mercury (mg/L)	pH	Specific Conductance (umhos/cm)
N-10	27-Mar-06	21.06	NP	4.19	0.00	16.87	NS-g	NS-g	NS-g	NS-g	NS-g	NS-g	NS-g
	13-Jun-06	21.06	NP	3.58	0.00	17.48	NS-g	NS-g	NS-g	NS-g	NS-g	NS-g	NS-g
	21-Aug-06	21.06	NP	5.78	0.00	15.28	NS-g	NS-g	NS-g	NS-g	NS-g	NS-g	NS-g
	12-Dec-06	21.06	NP	4.98	0.00	16.08	NS-g	NS-g	NS-g	NS-g	NS-g	NS-g	NS-g
	9-Mar-07	21.06	NP	5.04	0.00	16.02	NS-g	NS-g	NS-g	NS-g	NS-g	NS-g	NS-g
	20-Jun-07	21.06	NP	4.89	0.00	16.17	NS-g	NS-g	NS-g	NS-g	NS-g	NS-g	NS-g
	21-Sep-07	21.06	NP	6.52	0.00	14.54	NS-g	NS-g	NS-g	NS-g	NS-g	NS-g	NS-g
	18-Dec-07	21.06	NP	4.77	0.00	16.29	NS-g	NS-g	NS-g	NS-g	NS-g	NS-g	NS-g
	6-Feb-08	21.06	NP	4.41	0.00	16.65	ND (0.5)	ND (0.5)	NS-g	NS-g	NS-g	NS-g	NS-g
	4-Jun-08	21.06	NP	3.94	0.00	17.12	NS-g	NS-g	NS-g	NS-g	NS-g	NS-g	NS-g
	29-Aug-08	21.06	NP	5.98	0.00	15.08	NS-g	NS-g	NS-g	NS-g	NS-g	NS-g	NS-g
	25-Nov-08	21.06	NP	5.53	0.00	15.53	NS-g	NS-g	NS-g	NS-g	NS-g	NS-g	NS-g
	11-Mar-09	21.06	NP	5.73	0.00	15.33	NS-g	NS-g	NS-g	NS-g	NS-g	NS-g	NS-g
	20-May-09	21.06	NP	4.35	0.00	16.71	NS-g	NS-g	NS-g	NS-g	NS-g	NS-g	NS-g
	24-Sep-09	21.06	NP	4.45	0.00	16.61	NS-g	NS-g	NS-g	NS-g	NS-g	NS-g	NS-g
	7-Dec-09	21.06	NP	3.41	0.00	17.65	NS-g	NS-g	NS-g	NS-g	NS-g	NS-g	NS-g
	23-Feb-10	21.06	NP	2.34	0.00	18.72	NS-g	NS-g	NS-g	NS-g	NS-g	NS-g	NS-g
	2-Jun-10	21.06	NP	5.45	0.00	15.61	NS-g	NS-g	NS-g	NS-g	NS-g	NS-g	NS-g
	8-Sep-10	21.06	NP	5.87	0.00	15.19	NS-g	NS-g	NS-g	NS-g	NS-g	NS-g	NS-g
	9-Nov-10	21.06	NP	4.79	0.00	16.27	NS-g	NS-g	NS-g	NS-g	NS-g	NS-g	NS-g
	14-Mar-11	21.06	NP	2.90	0.00	18.16	NS-g	NS-g	NS-g	NS-g	NS-g	NS-g	NS-g
	17-May-11	21.06	NP	4.82	0.00	16.24	NS-g	NS-g	NS-g	NS-g	NS-g	NS-g	NS-g
	28-Sep-11	21.06	NP	2.47	0.00	18.59	NS-g	NS-g	NS-g	NS-g	NS-g	NS-g	NS-g
	20-Oct-11	21.06	NP	4.04	0.00	17.02	NS-g	NS-g	NS-g	NS-g	NS-g	NS-g	NS-g
N-11	27-Mar-06	30.48	NP	18.82	0.00	11.66	6.5	8.2	<5.3	0.22	0.00045	6.75	1,100
	13-Jun-06	30.48	NP	18.28	0.00	12.20	8.1	9.7	<5.1	0.20	0.0003	6.4	930
	21-Aug-06	30.48	NP	19.78	0.00	10.70	7.4	<10	8.0	0.07	<0.00020	6.82	1,000
	12-Dec-06	30.48	NP	18.47	0.00	12.01	7.8	12	13.0	0.09	<0.00020	6.81	1,400
	9-Mar-07	30.48	NP	18.53	0.00	11.95	7.6	12	7.2	0.13	<0.00020	6.94	1,000
	20-Jun-07	30.48	NP	18.38	0.00	12.10	7	11	<5.0	0.11	<0.00020	6.8	1,190
	21-Sep-07	30.48	NP	19.15	0.00	11.33	8	11	9.4	0.02	<0.00020	6.8	1,410
	18-Dec-07	30.48	NP	18.74	0.00	11.74	7	12	5.2	0.0170	<0.00020	6.8	1,210
	6-Feb-08	30.48	NP	18.55	0.00	11.93	10	11	<5.0	0.1470	<0.00020	6.8	1,040
	4-Jun-08	30.48	NP	18.48	0.00	12.00	8	12	<5.0	0.0539	<0.00020	6.8	916
	29-Aug-08	30.48	NP	19.04	0.00	11.44	5	8	<5.0	0.4760	<0.0010	6.8	826
	25-Nov-08	30.48	NP	18.91	0.00	11.57	<20	<20	6.2	0.0548	<0.0010	6.8	814
	11-Mar-09	30.48	NP	18.98	0.00	11.50	<5	7	<5.0	0.0362	<0.0020	6.9	880
	20-May-09	30.48	NP	18.22	0.00	12.26	5	8	<5.0	0.0625	<0.0020	6.7	937
	24-Sep-09	30.48	NP	18.20	0.00	12.28	48	9	<5.0	<0.0150	<0.0020	6.9	1,120
	7-Dec-09	30.48	NP	18.37	0.00	12.11	4	6	<5.0	0.1090	<0.0020	6.7	1,540
	23-Feb-10	30.48	NP	17.69	0.00	12.79	4	8	<5.0	0.0894	<0.0020	7.13	1,910
	2-Jun-10	30.48	NP	18.57	0.00	11.91	4	7	<5.0	0.0960	<0.0020	6.7	2,350
	8-Sep-10	30.48	NP	18.94	0.00	11.54	3	5	<5.0	0.0593	<0.0020	6.7	1,040
	9-Nov-10	30.48	NP	18.63	0.00	11.85	2	5	<5.0	0.299	<0.0020	6.8	840
	14-Mar-11	30.48	NP	17.51	0.00	12.97	3	6	<5.0	0.0152	<0.0020	6.8	1,250
	17-May-11	30.48	NP	18.45	0.00	12.03	7	6	5.2	<0.0150	<0.0020	6.9	1,710
	28-Sep-11	30.48	NP	17.06	0.00	13.42	<10	<10	<5.0	<0.0150	<0.00020	6.7	662
	20-Oct-11	30.48	NP	18.02	0.00	12.46	5	5	<5.0	0.1390	<0.00020	6.9	806

Table 1. Historical Groundwater Monitoring Data Summary
Post-Closure Monitoring
Sunoco, Inc (R&M)
Point Breeze Processing Area Land Treatment Unit

Aquaterra Technologies, Inc.

Well ID	Date	Casing Elevation (feet)	Depth to Product (feet)	Depth to Water (feet)	Product Thickness (feet)	Product Adjusted Groundwater Elevation (feet)	Benzene (µg/L)	Toluene (µg/L)	Oil & Grease (mg/L)	Total Chromium (mg/L)	Total Mercury (mg/L)	pH	Specific Conductance (umhos/cm)
N-24	27-Mar-06	21.17	NP	12.56	0.00	8.61	NS-g	NS-g	NS-g	NS-g	NS-g	NS-g	NS-g
	13-Jun-06	21.17	NP	11.12	0.00	10.05	NS-g	NS-g	NS-g	NS-g	NS-g	NS-g	NS-g
	21-Aug-06	21.17	NP	12.37	0.00	8.80	NS-g	NS-g	NS-g	NS-g	NS-g	NS-g	NS-g
	12-Dec-06	21.17	NP	12.34	0.00	8.83	NS-g	NS-g	NS-g	NS-g	NS-g	NS-g	NS-g
	9-Mar-07	21.17	NP	12.06	0.00	9.11	NS-g	NS-g	NS-g	NS-g	NS-g	NS-g	NS-g
	20-Jun-07	21.17	NP	12.1	0.00	9.07	NS-g	NS-g	NS-g	NS-g	NS-g	NS-g	NS-g
	21-Sep-07	21.17	NP	12.42	0.00	8.75	NS-g	NS-g	NS-g	NS-g	NS-g	NS-g	NS-g
	18-Dec-07	21.17	NP	12.31	0.00	8.86	NS-g	NS-g	NS-g	NS-g	NS-g	NS-g	NS-g
	7-Feb-08	21.17	NP	12.02	0.00	9.15	0.08	ND (0.5)	NS-g	NS-g	NS-g	NS-g	NS-g
	4-Jun-08	21.17	NP	11.89	0.00	9.28	NS-g	NS-g	NS-g	NS-g	NS-g	NS-g	NS-g
	29-Aug-08	21.17	NP	12.33	0.00	8.84	NS-g	NS-g	NS-g	NS-g	NS-g	NS-g	NS-g
	25-Nov-08	21.17	NP	12.11	0.00	9.06	NS-g	NS-g	NS-g	NS-g	NS-g	NS-g	NS-g
	11-Mar-09	21.17	NP	12.22	0.00	8.95	NS-g	NS-g	NS-g	NS-g	NS-g	NS-g	NS-g
	20-May-09	21.17	NP	11.83	0.00	9.34	NS-g	NS-g	NS-g	NS-g	NS-g	NS-g	NS-g
	24-Sep-09	21.17	NP	12.22	0.00	8.95	NS-g	NS-g	NS-g	NS-g	NS-g	NS-g	NS-g
	7-Dec-09	21.17	NP	12.18	0.00	8.99	NS-g	NS-g	NS-g	NS-g	NS-g	NS-g	NS-g
	23-Feb-10	21.17	NP	10.63	0.00	10.54	NS-g	NS-g	NS-g	NS-g	NS-g	NS-g	NS-g
	2-Jun-10	21.17	NP	12.42	0.00	8.75	NS-g	NS-g	NS-g	NS-g	NS-g	NS-g	NS-g
	8-Sep-10	21.17	NP	12.26	0.00	8.91	NS-g	NS-g	NS-g	NS-g	NS-g	NS-g	NS-g
	9-Nov-10	21.17	NP	11.74	0.00	9.43	NS-g	NS-g	NS-g	NS-g	NS-g	NS-g	NS-g
	14-Mar-11	21.17	NP	10.88	0.00	10.29	NS-g	NS-g	NS-g	NS-g	NS-g	NS-g	NS-g
	17-May-11	21.17	NP	11.01	0.00	10.16	NS-g	NS-g	NS-g	NS-g	NS-g	NS-g	NS-g
	28-Sep-11	21.17	NP	10.81	0.00	10.36	NS-g	NS-g	NS-g	NS-g	NS-g	NS-g	NS-g
	20-Oct-11	21.17	NP	12.17	0.00	9.00	NS-g	NS-g	NS-g	NS-g	NS-g	NS-g	NS-g
N-77	27-Mar-06	20.74	NP	8.72	0.00	12.02	NS-g	NS-g	NS-g	NS-g	NS-g	NS-g	NS-g
	13-Jun-06	20.74	NP	6.25	0.00	14.49	NS-g	NS-g	NS-g	NS-g	NS-g	NS-g	NS-g
	21-Aug-06	20.74	NP	6.25	0.00	12.49	NS-g	NS-g	NS-g	NS-g	NS-g	NS-g	NS-g
	12-Dec-06	20.74	NP	7.89	0.00	12.85	NS-g	NS-g	NS-g	NS-g	NS-g	NS-g	NS-g
	9-Mar-07	20.74	NP	6.82	0.00	13.92	NS-g	NS-g	NS-g	NS-g	NS-g	NS-g	NS-g
	20-Jun-07	20.74	NP	7.74	0.00	13.00	NS-g	NS-g	NS-g	NS-g	NS-g	NS-g	NS-g
	21-Sep-07	20.74	NP	8.79	0.00	11.95	NS-g	NS-g	NS-g	NS-g	NS-g	NS-g	NS-g
	18-Dec-07	20.74	NP	7.32	0.00	13.42	NS-g	NS-g	NS-g	NS-g	NS-g	NS-g	NS-g
	7-Feb-08	20.74	NP	6.83	0.00	13.91	ND (0.5)	ND (0.5)	NS-g	NS-g	NS-g	NS-g	NS-g
	4-Jun-08	20.74	NP	NM	0.00	NM	NS-g	NS-g	NS-g	NS-g	NS-g	NS-g	NS-g
	29-Aug-08	20.74	NP	8.03	0.00	12.71	NS-g	NS-g	NS-g	NS-g	NS-g	NS-g	NS-g
	25-Nov-08	20.74	NP	7.12	0.00	13.62	NS-g	NS-g	NS-g	NS-g	NS-g	NS-g	NS-g
	11-Mar-09	20.74	NP	7.96	0.00	12.78	NS-g	NS-g	NS-g	NS-g	NS-g	NS-g	NS-g
	20-May-09	20.74	NP	6.52	0.00	14.22	NS-g	NS-g	NS-g	NS-g	NS-g	NS-g	NS-g
	24-Sep-09	20.74	NP	7.53	0.00	13.21	NS-g	NS-g	NS-g	NS-g	NS-g	NS-g	NS-g
	7-Dec-09	20.74	NP	NM	0.00	NM	NS-g	NS-g	NS-g	NS-g	NS-g	NS-g	NS-g
	23-Feb-10	20.74	NP	NM	0.00	NM	NS-g	NS-g	NS-g	NS-g	NS-g	NS-g	NS-g
	2-Jun-10	20.74	NP	8.36	0.00	12.38	NS-g	NS-g	NS-g	NS-g	NS-g	NS-g	NS-g
	8-Sep-10	20.74	NP	8.11	0.00	12.63	NS-g	NS-g	NS-g	NS-g	NS-g	NS-g	NS-g
	9-Nov-10	20.74	NP	6.50	0.00	14.24	NS-g	NS-g	NS-g	NS-g	NS-g	NS-g	NS-g
	14-Mar-11	20.47	NP	5.35	0.00	15.12	NS-g	NS-g	NS-g	NS-g	NS-g	NS-g	NS-g
	17-May-11	20.47	NP	8.05	0.00	12.42	NS-g	NS-g	NS-g	NS-g	NS-g	NS-g	NS-g
	28-Sep-11	20.47	NP	5.25	0.00	15.22	NS-g	NS-g	NS-g	NS-g	NS-g	NS-g	NS-g
	20-Oct-11	20.47	NP	7.93	0.00	12.54	NS-g	NS-g	NS-g	NS-g	NS-g	NS-g	NS-g

Table 1. Historical Groundwater Monitoring Data Summary
Post-Closure Monitoring
Sunoco, Inc (R&M)
Point Breeze Processing Area Land Treatment Unit

Aquaterra Technologies, Inc.

Well ID	Date	Casing Elevation (feet)	Depth to Product (feet)	Depth to Water (feet)	Product Thickness (feet)	Product Adjusted Groundwater Elevation (feet)	Benzene (µg/L)	Toluene (µg/L)	Oil & Grease (mg/L)	Total Chromium (mg/L)	Total Mercury (mg/L)	pH	Specific Conductance (umhos/cm)
N-83	27-Mar-06	23.73	NP	15.98	0.00	7.75	NS-g	NS-g	NS-g	NS-g	NS-g	NS-g	NS-g
	13-Jun-06	23.73	NP	15.37	0.00	8.36	NS-g	NS-g	NS-g	NS-g	NS-g	NS-g	NS-g
	21-Aug-06	23.73	NP	17.39	0.00	6.34	NS-g	NS-g	NS-g	NS-g	NS-g	NS-g	NS-g
	12-Dec-06	23.73	NP	6.30	0.00	17.43	NS-g	NS-g	NS-g	NS-g	NS-g	NS-g	NS-g
	9-Mar-07	23.73	NP	5.70	0.00	18.03	NS-g	NS-g	NS-g	NS-g	NS-g	NS-g	NS-g
	20-Jun-07	23.73	NP	5.78	0.00	17.95	NS-g	NS-g	NS-g	NS-g	NS-g	NS-g	NS-g
	21-Sep-07	23.73	NP	6.45	0.00	17.28	NS-g	NS-g	NS-g	NS-g	NS-g	NS-g	NS-g
	18-Dec-07	23.73	NP	5.19	0.00	18.54	NS-g	NS-g	NS-g	NS-g	NS-g	NS-g	NS-g
	6-Feb-08	23.73	NP	15.12	0.00	8.61	ND (0.5)	ND (0.5)	NS-g	NS-g	NS-g	NS-g	NS-g
	4-Jun-08	23.73	NP	5.47	0.00	18.26	NS-g	NS-g	NS-g	NS-g	NS-g	NS-g	NS-g
	29-Aug-08	23.73	NP	6.43	0.00	17.30	NS-g	NS-g	NS-g	NS-g	NS-g	NS-g	NS-g
	25-Nov-08	23.73	NP	15.56	0.00	8.17	NS-g	NS-g	NS-g	NS-g	NS-g	NS-g	NS-g
	11-Mar-09	23.73	NP	15.69	0.00	8.04	NS-g	NS-g	NS-g	NS-g	NS-g	NS-g	NS-g
	20-May-09	23.73	NP	15.31	0.00	8.42	NS-g	NS-g	NS-g	NS-g	NS-g	NS-g	NS-g
	24-Sep-09	23.73	NP	14.61	0.00	9.12	NS-g	NS-g	NS-g	NS-g	NS-g	NS-g	NS-g
	7-Dec-09	23.73	NP	14.79	0.00	8.94	NS-g	NS-g	NS-g	NS-g	NS-g	NS-g	NS-g
	23-Feb-10	23.73	NP	15.18	0.00	8.55	NS-g	NS-g	NS-g	NS-g	NS-g	NS-g	NS-g
	2-Jun-10	23.73	NP	15.25	0.00	8.48	NS-g	NS-g	NS-g	NS-g	NS-g	NS-g	NS-g
	8-Sep-10	23.73	NP	15.47	0.00	8.26	NS-g	NS-g	NS-g	NS-g	NS-g	NS-g	NS-g
	9-Nov-10	23.73	NP	15.44	0.00	8.29	NS-g	NS-g	NS-g	NS-g	NS-g	NS-g	NS-g
	14-Mar-11	23.73	NP	15.24	0.00	8.49	NS-g	NS-g	NS-g	NS-g	NS-g	NS-g	NS-g
	17-May-11	23.73	NP	15.22	0.00	8.51	NS-g	NS-g	NS-g	NS-g	NS-g	NS-g	NS-g
	28-Sep-11	23.73	NP	13.77	0.00	9.96	NS-g	NS-g	NS-g	NS-g	NS-g	NS-g	NS-g
	20-Oct-11	23.73	NP	14.64	0.00	9.09	NS-g	NS-g	NS-g	NS-g	NS-g	NS-g	NS-g
N-89	27-Mar-06	27.14	14.16	14.17	0.01	12.99	NS-g	NS-g	NS-g	NS-g	NS-g	NS-g	NS-g
	13-Jun-06	27.14	NM-I	NM-I	NM-I	NM-I	NG-I	NG-I	NG-I	NG-I	NG-I	NG-I	NG-I
	21-Aug-06	27.14	14.19	14.20	0.01	12.96	NS-g	NS-g	NS-g	NS-g	NS-g	NS-g	NS-g
	12-Dec-06	27.14	13.76	13.81	0.05	13.42	NS-g	NS-g	NS-g	NS-g	NS-g	NS-g	NS-g
	9-Mar-07	27.14	NM	NM	NM	NM	NS-g	NS-g	NS-g	NS-g	NS-g	NS-g	NS-g
	20-Jun-07	27.14	13.62	13.68	0.02	13.54	NS-g	NS-g	NS-g	NS-g	NS-g	NS-g	NS-g
	21-Sep-07	27.14	14.34	14.38	0.04	12.83	NS-g	NS-g	NS-g	NS-g	NS-g	NS-g	NS-g
	18-Dec-07	27.14	NP	14.47	0.00	12.67	NS-g	NS-g	NS-g	NS-g	NS-g	NS-g	NS-g
	6-Feb-08	27.14	NP	NM	NM	NM	NS-g	NS-g	NS-g	NS-g	NS-g	NS-g	NS-g
	4-Jun-08	27.14	NP	14.00	0.00	13.14	NS-g	NS-g	NS-g	NS-g	NS-g	NS-g	NS-g
	29-Aug-08	27.14	NP	14.18	0.00	12.96	NS-g	NS-g	NS-g	NS-g	NS-g	NS-g	NS-g
	25-Nov-08	27.14	NP	14.33	0.00	12.81	NS-g	NS-g	NS-g	NS-g	NS-g	NS-g	NS-g
	11-Mar-09	27.14	NP	14.29	0.00	12.85	NS-g	NS-g	NS-g	NS-g	NS-g	NS-g	NS-g
	20-May-09	27.14	NP	14.04	0.00	13.1	NS-g	NS-g	NS-g	NS-g	NS-g	NS-g	NS-g
	24-Sep-09	27.14	NP	NM	NM	NM	NS-g	NS-g	NS-g	NS-g	NS-g	NS-g	NS-g
	7-Dec-09	27.14	NP	damaged	NM	NM	NS-g	NS-g	NS-g	NS-g	NS-g	NS-g	NS-g
	23-Feb-10	27.14	NP	damaged	NM	NM	NS-g	NS-g	NS-g	NS-g	NS-g	NS-g	NS-g
	2-Jun-10	27.14	NP	damaged	NM	NM	NS-g	NS-g	NS-g	NS-g	NS-g	NS-g	NS-g
	8-Sep-10	27.14	NP	damaged	NM	NM	NS-g	NS-g	NS-g	NS-g	NS-g	NS-g	NS-g
	9-Nov-10	27.14	NP	damaged	NM	NM	NS-g	NS-g	NS-g	NS-g	NS-g	NS-g	NS-g
	14-Mar-11	27.14	NP	damaged	NM	NM	NS-g	NS-g	NS-g	NS-g	NS-g	NS-g	NS-g
	17-May-11	27.14	NP	damaged	NM	NM	NS-g	NS-g	NS-g	NS-g	NS-g	NS-g	NS-g
	28-Sep-11	27.14	NP	damaged	NM	NM	NS-g	NS-g	NS-g	NS-g	NS-g	NS-g	NS-g
	20-Oct-11	27.14	NP	damaged	NM	NM	NS-g	NS-g	NS-g	NS-g	NS-g	NS-g	NS-g

NS-g = Not Sampled, gauge only
NP = No Product
NM-I = Not Measured, inaccessible
NG-I = Not Gauged, inaccessible
NS-p = Not Sampled due to presence of product
Oil & Grease sample from MW-4 was resampled on 1-2-07 due to broken bottle ware during the original sampling event.
Liquid levels collected on 12 December 2006 and samples collected 13 December 2006.
1st Quarter 2008 samples collected on 6-Feb-08 for benzene and toluene, and on 23-Apr-08 for other compounds.
Bold values exceed the PADEP Statewide Health Standard MSCs.
N-89 - blockage in well at approximately 4' below casing.

Table 2. Surface Water Runoff Monitoring Data Summary
Closure Monitoring
Sunoco, Inc (R&M)
Point Breeze Processing Area Land Treatment Unit

Aquaterra Technologies, Inc.

Outfall Location	Date	Benzene (µg/L)	Toluene (µg/L)	Oil & Grease (mg/L)	Total Chromium (mg/L)	Total Mercury (mg/L)	pH	Specific Conductance (µmhos/cm)	Total Nitrate/ Nitrite Nitrogen (mg/L)	Total Suspended Solids (mg/L)	Biochemical Oxygen Demand (mg/L)
A	16-Nov-06	<500	<500	<5.0	**0.261**	0.00021	7.4	3,800	0.64	**918**	38.1
	16-Mar-07	<1.0	<1.0	**26**	**0.64**	0.0013	7.75	600	**5.1**	**1,300**	NA
	4-Jun-07	**2.8**	<1.0	<5.0	**0.26**	<0.00020	7.46	2,120	**21**	**4,200**	**56**
	27-Sep-07	<5	<5	10.8	**0.161**	<0.00020	8	1,500	0.42	**7,700**	**61.5**
	18-Dec-07	<50	<50	**18.3**	**0.166**	<0.00020	7.3	2,760	**22.6**	**1,580**	**185**
	7-Feb-08	<20	<20	5.2	0.0889	0.000047	7.5	4,370	3.6	**640**	30.9
	20-Mar-08	**2**	<1	<5.0	<0.0150	<0.00020	7.2	1,670	2.7	*<30.0	<7.3
	9-May-08	<10	<10	<5.0	<0.0150	<0.00020	7.6	2,520	**16.7**	**131**	**49.2**
	26-Sep-08	<10	<10	<5.0	0.0453	<0.00020	8.3	1,780	0.80	**92**	7.7
	25-Nov-08	<1	<1	<5.0	<0.0150	<0.00020	7.8	1,140	0.94	<12.0	6.6
	26-Mar-09	<20	<20	7.6	0.0203	0.00023	7.3	4,980	**13.0**	12.4	16.2
	15-May-09	<10	<10	<5.0	<0.0150	<0.00020	7.4	2,710	**7.0**	<12.0	<4.1
	24-Sep-09	**3**	<1	<5.0	<0.0150	<0.00020	7.8	2,230	<0.50	<24.0	36.9
	3-Dec-09	<1	<1	<5.0	0.0322	<0.00020	7.4	1,080	NA	**51.3**	11.8
	23-Feb-10	<1	<1	<5.0	<0.0150	<0.00020	7.4	354	0.68	**71.2**	<1.9
	28-May-10	<10	<10	6.9	<0.0150	<0.00020	8.3	2,340	<1.0	**65.6**	**67.9**
	17-Sep-10	<1	<1	<5.0	<0.0150	<0.00020	8.0	1,370	<1.0	30.0	32.8
	17-Nov-10	<10	<10	<5.0	<0.0150	<0.00020	7.9	1,870	1.8	<12.0	<2.8
	25-Feb-11	<1	<1	<5.0	<0.0150	<0.00020	7.4	439	1.3	**54.0**	<3.7
	17-May-11	<5	<5	<5.0	<0.0150	<0.00020	7.9	2,340	**11.2**	<12.0	<8.9
	18-Aug-11	<1	<1	<5.0	<0.0150	<0.00020	7.5	458	1.3	<12.0	<5.6
	17-Nov-11	<1	<1	<5.0	<0.0150	<0.00020	7.7	2,330	<0.10	<12.0	15.8
B	16-Nov-06	NS-I	NS-I	NS-I	NS-I	NS-I	NS-I	NS-I	NS-I	NS-I	NS-I
	16-Mar-07	<1.0	<1.0	<5.0	0.025	<0.00020	7.67	480	3.7	**150**	NA
	4-Jun-07	DRY	DRY	DRY	DRY	DRY	DRY	DRY	DRY	DRY	DRY
	27-Sep-07	DRY	DRY	DRY	DRY	DRY	DRY	DRY	DRY	DRY	DRY
	18-Dec-07	DRY	DRY	DRY	DRY	DRY	DRY	DRY	DRY	DRY	DRY
	7-Feb-08	DRY	DRY	DRY	DRY	DRY	DRY	DRY	DRY	DRY	DRY
	20-Mar-08	**1**	<1	<5.0	<0.0150	<0.00020	7.4	494	<0.10	**355**	<7.0
	9-May-08	DRY	DRY	DRY	DRY	DRY	DRY	DRY	DRY	DRY	DRY
	26-Sep-08	DRY	DRY	DRY	DRY	DRY	DRY	DRY	DRY	DRY	DRY
	25-Nov-08	DRY	DRY	DRY	DRY	DRY	DRY	DRY	DRY	DRY	DRY
	26-Mar-09	DRY	DRY	DRY	DRY	DRY	DRY	DRY	DRY	DRY	DRY
	15-May-09	DRY	DRY	DRY	DRY	DRY	DRY	DRY	DRY	DRY	DRY
	24-Sep-09	DRY	DRY	DRY	DRY	DRY	DRY	DRY	DRY	DRY	DRY
	3-Dec-09	DRY	DRY	DRY	DRY	DRY	DRY	DRY	DRY	DRY	DRY
	23-Feb-10	DRY	DRY	DRY	DRY	DRY	DRY	DRY	DRY	DRY	DRY
	28-May-10	DRY	DRY	DRY	DRY	DRY	DRY	DRY	DRY	DRY	DRY
	17-Sep-10	DRY	DRY	DRY	DRY	DRY	DRY	DRY	DRY	DRY	DRY
	17-Nov-10	DRY	DRY	DRY	DRY	DRY	DRY	DRY	DRY	DRY	DRY
	25-Feb-11	DRY	DRY	DRY	DRY	DRY	DRY	DRY	DRY	DRY	DRY
	17-May-11	DRY	DRY	DRY	DRY	DRY	DRY	DRY	DRY	DRY	DRY
	18-Aug-11	DRY	DRY	DRY	DRY	DRY	DRY	DRY	DRY	DRY	DRY
	17-Nov-11	DRY	DRY	DRY	DRY	DRY	DRY	DRY	DRY	DRY	DRY

Table 2. Surface Water Runoff Monitoring Data Summary
Closure Monitoring
Sunoco, Inc (R&M)
Point Breeze Processing Area Land Treatment Unit

Aquaterra Technologies, Inc.

Outfall Location	Date	Benzene (µg/L)	Toluene (µg/L)	Oil & Grease (mg/L)	Total Chromium (mg/L)	Total Mercury (mg/L)	pH	Specific Conductance (µmhos/cm)	Total Nitrate/ Nitrite Nitrogen (mg/L)	Total Suspended Solids (mg/L)	Biochemical Oxygen Demand (mg/L)
C	16-Nov-06	<50	<50	9	0.472	0.0014	7.8	3,390	1.2	2,210	20.3
	16-Mar-07	<1.0	<1.0	11	5.30	0.0039	7.83	1,000	8.5	6,500	NA
	4-Jun-07	<1.0	<1.0	20	0.59	0.0011	7.62	3,120	21	5,100	17
	27-Sep-07	<5	<5	16.3	3.84	<0.0010	7.8	2,170	0.52	17,200	190
	18-Dec-07	<20	<20	9.9	0.891	0.0006	7.5	3,780	16.3	5,650	41.1
	7-Feb-08	<20	<20	17.6	0.0765	0.00025	7.8	4,010	14.7	605	54.3
	20-Mar-08	<1	<1	<5.0	<0.0150	<0.00020	7.7	3,380	4.0	*<120	<7.4
	9-May-08	<1	<1	<5.0	<0.0150	<0.00020	7.3	2,970	6.0	29.0	6.1
	26-Sep-08	<10	<10	6.7	0.0593	<0.00020	8.1	1,920	0.63	118	7.7
	25-Nov-08	<10	<10	5.4	<0.0150	<0.00020	7.9	3,260	6.7	<12.0	4.3
	26-Mar-09	<10	<10	<5.0	<0.0150	<0.0010	7.8	4,390	15.0	<12.0	<11.3
	15-May-09	<10	<10	<5.0	<0.0150	<0.00020	7.3	2,450	7.0	<12.0	8.6
	24-Sep-09	<1	<1	5.2	<0.0150	<0.00020	7.9	3,430	1.9	<12.0	<2.2
	3-Dec-09	<1	<1	<5.0	<0.0150	<0.00020	7.5	1,410	NA	17.2	8.5
	23-Feb-10	<1	<1	<5.0	<0.0150	<0.00020	7.73	246	0.19	27.6	<2.2
	28-May-10	<10	<10	10.5	<0.0150	<0.00020	7.4	3,230	<1.0	<30.0	416
	17-Sep-10	<1	<1	<5.0	<0.0150	<0.00020	8.1	2,080	<1.0	<12.0	21.1
	17-Nov-10	<10	<10	<5.0	<0.0150	<0.00020	7.8	3,350	<0.50	49.2	7.5
	25-Feb-11	<1	<1	<5.0	<0.0150	<0.00020	7.3	469	1.2	<12.0	<3.5
	17-May-11	<5	<5	<5.0	<0.0150	<0.00020	7.7	3,120	10.9	<12.0	<9.8
	18-Aug-11	<1	<1	<5.0	<0.0150	<0.00020	7.4	905	5.0	<12.0	<5.0
	17-Nov-11	<1	<1	<5.0	<0.0150	<0.00020	7.6	3,560	3.9	24.8	<5.7
D	16-Nov-06	<500	<500	6.6	0.580	0.00047	7.3	4,330	0.39	3,370	51.6
	16-Mar-07	<1.0	<1.0	<5.0	2.90	0.0061	7.75	640	12	3,300	NA
	4-Jun-07	<1.0	<1.0	8.1	0.69	0.00061	7.28	1,620	6.9	6,000	16
	27-Sep-07	<5	<5	7.2	0.25	<0.0020	8.1	2,490	0.77	843	16.2
	18-Dec-07	<100	<100	6.4	0.0493	<0.0020	7.4	4,550	6.3	360	47.2
	7-Feb-08	<20	<20	19.9	0.245	0.00099	7.4	4,750	6.1	1,260	51.0
	20-Mar-08	<1	<1	<5.0	0.0431	0.00026	7.7	2,250	1.6	*<75.0	<11.0
	9-May-08	<1	<1	<5.0	<0.0150	<0.00020	7.3	4,270	0.44	44.6	27.7
	26-Sep-08	<10	<10	6.7	0.0593	<0.00020	8.1	1,920	0.63	118	13.4
	25-Nov-08	<10	<10	10.1	0.0178	<0.00020	7.6	3,580	14.4	<12.0	<5.0
	26-Mar-09	ND (10)	ND (10)	ND (1.4)	0.0291	0.00013 J	7.1	5,690	1.6	143	8.2
	15-May-09	<10	<10	<5.0	<0.0150	<0.00020	7.5	2,410	2.4	18.4	60.2
	24-Sep-09	<10	<10	7.7	0.0325	<0.00020	7.2	4,980	4.3	34.0	16.4
	3-Dec-09	<1	<1	<5.0	<0.0150	<0.00020	7.5	1,450	NA	50.7	44.4
	23-Feb-10	<1	<1	<5.0	<0.0150	<0.00020	7.9	225	<0.10	<12.0	<1.9
	28-May-10	<10	<10	<5.0	0.0295	<0.00020	7.3	4,410	4.7	71.0	73.3
	17-Sep-10	<10	<10	<5.0	<0.0150	<0.00020	7.8	1,880	1.1	<12.0	11.4
	17-Nov-10	<10	<10	6.2	0.0184	<0.00020	7.5	3,640	4.2	20.0	22.0
	25-Feb-11	<1	<1	<5.0	<0.0150	<0.00020	7.5	364	<0.10	<12.0	<3.5
	17-May-11	<5	<5	<5.0	0.0208	<0.00020	7.8	3,330	16.3	12.8	50.0
	18-Aug-11	<1	<1	<5.0	<0.0150	<0.00020	7.6	439	1.6	<12.0	<4.9
	17-Nov-11	<1	<1	5.1	0.0167	<0.00020	7.6	3,530	3.9	24.4	41.1

Table 2. Surface Water Runoff Monitoring Data Summary
Closure Monitoring
Sunoco, Inc (R&M)
Point Breeze Processing Area Land Treatment Unit

Aquaterra Technologies, Inc.

Outfall Location	Date	Benzene (µg/L)	Toluene (µg/L)	Oil & Grease (mg/L)	Total Chromium (mg/L)	Total Mercury (mg/L)	pH	Specific Conductance (µmhos/cm)	Total Nitrate/ Nitrite Nitrogen (mg/L)	Total Suspended Solids (mg/L)	Biochemical Oxygen Demand (mg/L)
E	16-Nov-06	<20	<20	10.2	0.139	0.0037	7.9	1,980	1.1	3,570	38.1
	16-Mar-07	<1.0	<1.0	90	2.6	0.0074	8.39	500	11	2,400	NA
	4-Jun-07	1.1	<1.0	8.3	2.2	0.0054	7.59	949	27	6,900	52
	27-Sep-07	<5	<5	51.8	0.4	<0.0020	8.1	981	1.0	2,380	22.7
	18-Dec-07	<20	<20	21.9	4.72	0.0018	7.8	2,550	3.9	1,120	21.3
	7-Feb-08	<10	<10	10.6	0.682	0.00062	8.0	2,540	5.4	94.4	14.1
	20-Mar-08	<1	<1	<5.0	<0.0150	<0.00020	7.6	1,020	1.1	*<60.0	<2.9
	9-May-08	<1	<1	<5.0	<0.0150	<0.00020	7.4	1,940	0.18	71.6	4.8
	26-Sep-08	<10	<10	<5.0	0.0228	<0.00020	8.2	1,000	0.71	529	13.0
	25-Nov-08	<10	<10	5.6	<0.0150	<0.00020	8.3	3,470	1.6	<12.0	<5.4
	26-Mar-09	<1	<1	<5.0	<0.0150	<0.00020	8.1	3,190	4.2	<12.0	<5.0
	15-May-09	<10	<10	<5.0	<0.0150	<0.00020	7.7	935	0.29	<12.0	<2.9
	24-Sep-09	<1	<1	<5.0	<0.0150	<0.00020	8.1	2,290	<0.10	<12.0	11.7
	3-Dec-09	<1	<1	<5.0	<0.0150	<0.00020	7.7	688	NA	43.0	<3.0
	23-Feb-10	<1	<1	<5.0	<0.0150	<0.00020	7.99	188	<0.10	<12.0	<2.6
	28-May-10	<5	6	6.2	<0.0150	<0.00020	7.8	1,500	<1.0	23.6	13.8
	17-Sep-10	<1	<1	<5.0	<0.0150	<0.00020	7.9	1,430	<1.0	<12.0	11.7
	17-Nov-10	<10	<10	<5.0	<0.0150	<0.00020	8.1	1,930	1.1	<12.0	<4.3
	25-Feb-11	<1	<1	<5.0	<0.0150	<0.00020	7.3	448	0.24	<12.0	<2.7
	17-May-11	<1	<1	<5.0	<0.0150	<0.00020	8.0	1,620	1.5	<12.0	<5.1
	18-Aug-11	<1	<1	<5.0	<0.0150	<0.00020	7.4	637	<0.50	<12.0	<4.4
	17-Nov-11	<1	<1	<5.0	<0.0150	<0.00020	7.7	2,140	<0.10	19.2	13.8
F	16-Nov-06	<50	<50	<5.0	0.0272	<0.00020	7.9	2,920	1.2	107	44.9
	16-Mar-07	<1.0	<1.0	<5.0	1.6	0.0066	7.75	500	15	650	NA
	4-Jun-07	<1.0	<1.0	-	0.17	0.0004	7.66	1,330	18	250	12
	27-Sep-07	<5	<5	9.3	0.149	<0.00020	8	1,310	0.29	489	39.9
	18-Dec-07	<20	<20	8.8	0.13	<0.00020	7.5	2,720	5.8	110	<9.0
	7-Feb-08	<10	<10	7.2	0.0232	<0.00020	7.8	3,120	6.7	86.4	11.1
	20-Mar-08	<1	<1	<5.0	<0.0150	<0.00020	7.6	1,300	1.8	*<20.0	<5.5
	9-May-08	<1	<1	<5.0	<0.0150	<0.00020	7.6	2,390	2.2	14.4	4.9
	26-Sep-08	<10	<10	<5.0	<0.0150	<0.00020	8.1	1,010	0.93	112	8.3
	25-Nov-08	<1	<1	5.4	<0.0150	<0.00020	7.8	2,530	0.44	<12.0	<9.1
	26-Mar-09	<1	<1	<5.0	<0.0150	<0.00020	8.0	3,830	12.9	<12.0	<5.5
	15-May-09	<10	<10	<5.0	<0.0150	<0.00020	7.6	1,170	0.55	<12.0	<2.5
	24-Sep-09	<1	<1	<5.0	<0.0150	<0.00020	7.1	2,640	<0.10	<17.2	89.3
	3-Dec-09	<1	<1	<5.0	<0.0150	<0.00020	7.6	869	NA	<12.0	<4.3
	23-Feb-10	<1	<1	<5.0	<0.0150	<0.00020	8.2	214	<0.10	<12.0	<2.0
	28-May-10	<5	<5	<5.0	<0.0150	<0.00020	7.9	1,310	<1.0	20.8	19.5
	17-Sep-10	<1	<1	<5.0	<0.0150	<0.00020	7.7	1,420	<1.0	<12.0	22.1
	17-Nov-10	<10	<10	<5.0	<0.0150	<0.00020	7.7	2,930	5.5	<12.0	<4.4
	25-Feb-11	<1	<1	<5.0	<0.0150	<0.00020	7.3	513	<0.10	<12.0	<2.3
	17-May-11	<1	<1	<5.0	<0.0150	<0.00020	7.8	1,910	5.2	<12.0	<5.1
	18-Aug-11	<1	<1	<5.0	<0.0150	<0.00020	7.3	714	<0.50	<12.0	<4.0
	17-Nov-11	<1	<1	<5.0	<0.0150	<0.00020	7.6	2,500	1.0	<12.0	<8.4

Table 2. Surface Water Runoff Monitoring Data Summary
Closure Monitoring
Sunoco, Inc (R&M)
Point Breeze Processing Area Land Treatment Unit

Aquaterra Technologies, Inc.

Outfall Location	Date	Benzene (µg/L)	Toluene (µg/L)	Oil & Grease (mg/L)	Total Chromium (mg/L)	Total Mercury (mg/L)	pH	Specific Conductance (µmhos/cm)	Total Nitrate/ Nitrite Nitrogen (mg/L)	Total Suspended Solids (mg/L)	Biochemical Oxygen Demand (mg/L)
G/H	16-Nov-06	NS-dry	NS-dry	NS-dry	NS-dry	NS-dry	NS-dry	NS-dry	NS-dry	NS-dry	NS-dry
	16-Mar-07	<1.0	<1.0	<5.0	<0.0050	<0.00020	7.61	700	1.4	20	NA
	4-Jun-07	DRY	DRY	DRY	DRY	DRY	DRY	DRY	DRY	DRY	DRY
	27-Sep-07	DRY	DRY	DRY	DRY	DRY	DRY	DRY	DRY	DRY	DRY
	18-Dec-07	DRY	DRY	DRY	DRY	DRY	DRY	DRY	DRY	DRY	DRY
	7-Feb-08	DRY	DRY	DRY	DRY	DRY	DRY	DRY	DRY	DRY	DRY
	20-Mar-08	DRY	DRY	DRY	DRY	DRY	DRY	DRY	DRY	DRY	DRY
	9-May-08	DRY	DRY	DRY	DRY	DRY	DRY	DRY	DRY	DRY	DRY
	26-Sep-08	DRY	DRY	DRY	DRY	DRY	DRY	DRY	DRY	DRY	DRY
	25-Nov-08	DRY	DRY	DRY	DRY	DRY	DRY	DRY	DRY	DRY	DRY
	26-Mar-09	DRY	DRY	DRY	DRY	DRY	DRY	DRY	DRY	DRY	DRY
	15-May-09	DRY	DRY	DRY	DRY	DRY	DRY	DRY	DRY	DRY	DRY
	24-Sep-09	DRY	DRY	DRY	DRY	DRY	DRY	DRY	DRY	DRY	DRY
	3-Dec-09	DRY	DRY	DRY	DRY	DRY	DRY	DRY	DRY	DRY	DRY
	23-Feb-10	DRY	DRY	DRY	DRY	DRY	DRY	DRY	DRY	DRY	DRY
	28-May-10	DRY	DRY	DRY	DRY	DRY	DRY	DRY	DRY	DRY	DRY
	17-Sep-10	DRY	DRY	DRY	DRY	DRY	DRY	DRY	DRY	DRY	DRY
	17-Nov-10	DRY	DRY	DRY	DRY	DRY	DRY	DRY	DRY	DRY	DRY
	25-Feb-11	DRY	DRY	DRY	DRY	DRY	DRY	DRY	DRY	DRY	DRY
	17-May-11	DRY	DRY	DRY	DRY	DRY	DRY	DRY	DRY	DRY	DRY
	18-Aug-11	DRY	DRY	DRY	DRY	DRY	DRY	DRY	DRY	DRY	DRY
	17-Nov-11	DRY	DRY	DRY	DRY	DRY	DRY	DRY	DRY	DRY	DRY
	Water Quality Criteria:	ND	ND	11	0.24	0.002	6.0-9.0	1,000,000	5	30	40
	Detection Limits:	5	5	0.2	<0.01	<0.005	-	-	-	-	-

NS-I = Not sampled, inaccessible
NS-dry = Not sampled, dry
Water Quality Criteria and Detection Limits are established by the Sunoco, Inc (R&M) Ammended Closure Plan (original date November 1988, ammended November 2002 and May 2004), in Tables CP-2 and CP-3, respectively.
Post Closure Requirements include: Oil&Grease, pH, Specific Conductance, Chromium, Mercury, Benzene and Toluene.
Bolded values are outside the established Water Quality Criteria.
*Reporting Limit was increased due to insufficient sample volume.
If LOQ (limit of quantitation) for benzene and toluene is greater than one, it is typically due to sample foaming. If the dilution factor is greater than 20, the data is generally reported to the method detection limit (MDL).

Table 1. Historical Groundwater Monitoring Data Summary
Post-Closure Monitoring
Sunoco, Inc (R&M)
Point Breeze Processing Area Land Treatment Unit

Aquaterra Technologies, Inc.

Well ID	Date	Casing Elevation (feet)	Depth to Product (feet)	Depth to Water (feet)	Product Thickness (feet)	Product Adjusted Groundwater Elevation (feet)	Benzene (µg/L)	Toluene (µg/L)	Oil & Grease (mg/L)	Total Chromium (mg/L)	Total Mercury (mg/L)	pH	Specific Conductance (umhos/cm)
MW-4	27-Mar-06	25.20	NP	16.48	0.00	8.72	<1.0	<5.0	<5.3	<0.0050	<0.00020	6.75	1,700
(N-69)	13-Jun-06	25.20	NP	15.55	0.00	9.65	<1.0	<5.0	<5.0	<0.0050	<0.00020	6.42	1,700
	21-Aug-06	25.20	NP	15.41	0.00	9.79	<1.0	<5.0	<5.2	<0.0050	<0.00020	6.9	1,700
	12-Dec-06	25.20	NP	14.77	0.00	10.43	<1.0	<1.0	5.0	<0.0050	<0.00020	6.92	2,000
	9-Mar-07	25.20	NP	15.85	0.00	9.35	<1.0	<1.0	<5.0	<0.0050	<0.00020	7.07	1,600
	20-Jun-07	25.20	NP	14.61	0.00	10.59	<1.0	<1.0	<5.0	<0.0150	<0.00020	7.2	1,560
	21-Sep-07	25.20	NP	15.62	0.00	9.58	<1	<1	<5.0	<0.0150	<0.00020	7.0	1,640
	18-Dec-07	25.20	NP	16.20	0.00	9.00	<1	<1	<5.0	<0.0150	<0.00020	6.8	1,650
	6-Feb-08	25.20	NP	16.02	0.00	9.18	ND (0.5)	ND (0.5)	<5.0	<0.0020	<0.00020	7.1	1,690
	4-Jun-08	25.20	NP	15.25	0.00	9.95	<1	<1	<5.0	<0.0150	<0.00020	7	1,680
	29-Aug-08	25.20	NP	15.78	0.00	9.42	<1	<1	<5.0	<0.0150	<0.00020	7.1	1,540
	25-Nov-08	25.20	NP	15.70	0.00	9.50	<1	<1	<5.0	<0.0150	<0.00020	6.9	1,470
	11-Mar-09	25.20	NP	15.64	0.00	9.56	<1	<1	<5.0	<0.0150	<0.00020	7.1	1,550
	20-May-09	25.20	NP	15.14	0.00	10.06	<1	<1	<5.0	<0.0150	<0.00020	7.1	1,530
	24-Sep-09	25.20	NP	14.06	0.00	11.14	54	3	<5.0	<0.0150	<0.00020	7.3	1,560
	7-Dec-09	25.20	NP	14.72	0.00	10.48	<1	<1	<5.0	<0.0150	<0.00020	7.6	1,490
	23-Feb-10	25.20	NP	14.82	0.00	10.38	<1	<1	<5.0	<0.0150	<0.00020	8.1	1,440
	2-Jun-10	25.20	NP	14.69	0.00	10.51	<1	<1	<5.0	<0.0150	<0.00020	7.6	1,540
	8-Sep-10	25.20	NP	15.29	0.00	9.91	<1	<1	<5.0	<0.0150	<0.00020	7.5	1,440
	9-Nov-10	25.20	NP	15.34	0.00	9.86	<1	<1	<5.0	<0.0150	<0.00020	7.4	1,570
	14-Mar-11	25.20	NP	15.60	0.00	9.60	<1	<1	<5.0	<0.0150	<0.00020	7.0	1,680
	17-May-11	25.20	NP	15.14	0.00	10.06	<1	<1	<5.0	<0.0150	<0.00020	7.2	1,730
	28-Sep-11	25.20	NP	13.06	0.00	12.14	<1	<1	<5.0	<0.0150	<0.00020	6.9	1,730
	20-Oct-11	25.20	NP	13.97	0.00	11.23	<1	<1	<5.0	<0.0150	<0.00020	7.2	1,580
MW-5	27-Mar-06	24.20	NP	15.66	0.00	8.54	<1.0	<5.0	<5.3	<0.0050	<0.00020	7.03	1,200
(N-70)	13-Jun-06	24.20	NP	15.03	0.00	9.17	<1.0	<5.0	<5.0	<0.0050	<0.00020	6.44	1,300
	21-Aug-06	24.20	NP	14.97	0.00	9.23	<1.0	<5.0	<5.3	<0.0050	<0.00020	7.31	920
	12-Dec-06	24.20	NP	14.40	0.00	9.80	<1.0	<1.0	<5.0	<0.0050	<0.00020	7.18	1,100
	9-Mar-07	24.20	NP	15.36	0.00	8.84	<1.0	<1.0	<5.0	<0.0050	<0.00020	7.13	1,300
	20-Jun-07	24.20	NP	14.37	0.00	9.83	<1.0	<1.0	<5.0	<0.0150	<0.00020	7.0	1,050
	21-Sep-07	24.20	NP	15.21	0.00	8.99	<1	<1	<5.0	<0.0150	<0.00020	6.9	1,220
	18-Dec-07	24.20	NP	15.70	0.00	8.50	<1	<1	<5.0	<0.0150	<0.00020	7.0	1,100
	6-Feb-08	24.20	NP	15.55	0.00	8.65	ND (0.5)	ND (0.5)	<5.0	<0.0020	<0.00020	7.1	1,180
	4-Jun-08	24.20	NP	13.83	0.00	10.37	<1	<1	<5.0	<0.0150	<0.00020	7	1,140
	29-Aug-08	24.20	NP	15.23	0.00	8.97	<1	<1	<5.0	<0.0150	<0.00020	6.8	1,330
	25-Nov-08	24.20	NP	15.11	0.00	9.09	<1	<1	<5.0	<0.0150	<0.00020	6.9	1,080
	11-Mar-09	24.20	NP	15.18	0.00	9.02	<1	<1	<5.0	<0.0150	<0.00020	7.1	1,190
	20-May-09	24.20	NP	14.65	0.00	9.55	<1	<1	<5.0	<0.0150	<0.00020	7.1	1,060
	24-Sep-09	24.20	NP	13.73	0.00	10.47	12	1	<5.0	<0.0150	<0.00020	7.4	988
	7-Dec-09	24.20	NP	14.28	0.00	9.92	<1	<1	<5.0	<0.0150	<0.00020	7.5	863
	23-Feb-10	24.20	NP	14.47	0.00	9.73	<1	<1	<5.0	<0.0150	<0.00020	7.8	1,030
	2-Jun-10	24.20	NP	14.52	0.00	9.68	<1	<1	<5.0	<0.0150	<0.00020	7.1	1,250
	8-Sep-10	24.20	NP	14.86	0.00	9.34	<1	<1	<5.0	<0.0150	<0.00020	7.1	1,010
	9-Nov-10	24.20	NP	14.87	0.00	9.33	<1	<1	<5.0	<0.0150	<0.00020	7.2	1,070
	14-Mar-11	24.20	NP	15.01	0.00	9.19	<1	<1	<5.0	<0.0150	<0.00020	7.1	1,230
	17-May-11	24.20	NP	14.67	0.00	9.53	<1	<1	<5.0	<0.0150	<0.00020	7.1	1,270
	28-Sep-11	24.20	NP	12.81	0.00	11.39	<1	<1	<5.0	<0.0150	<0.00020	6.7	1,470
	20-Oct-11	24.20	NP	13.77	0.00	10.43	<1	<1	<5.0	<0.0150	<0.00020	6.9	1,390

Table 1. Historical Groundwater Monitoring Data Summary
Post-Closure Monitoring
Sunoco, Inc (R&M)
Point Breeze Processing Area Land Treatment Unit

Aquaterra Technologies, Inc.

Well ID	Date	Casing Elevation (feet)	Depth to Product (feet)	Depth to Water (feet)	Product Thickness (feet)	Product Adjusted Groundwater Elevation (feet)	Benzene (µg/L)	Toluene (µg/L)	Oil & Grease (mg/L)	Total Chromium (mg/L)	Total Mercury (mg/L)	pH	Specific Conductance (umhos/cm)
MW-6 (RW-300)	27-Mar-06	23.84	15.59	15.66	0.07	8.30	35	<5.0	37	<0.0050	<0.00020	9.43	6,900
	13-Jun-06	23.84	17.01	18.28	1.27	7.78	9.3	6.5	12	<0.0050	<0.00020	6.28	1,700
	21-Aug-06	23.84	17.19	18.31	1.12	7.49	9.8	7.4	<5.3	<0.0050	<0.00020	6.74	1,700
	12-Dec-06	23.84	14.69	17.55	2.86	11.30	NS-p	NS-p	NS-p	NS-p	NS-p	NS-p	NS-p
	9-Mar-07	23.84	14.87	15.51	0.64	8.81	NS-p	NS-p	NS-p	NS-p	NS-p	NS-p	NS-p
	20-Jun-07	23.84	17.44	17.79	0.35	6.82	NS-p	NS-p	NS-p	NS-p	NS-p	NS-p	NS-p
	21-Sep-07	23.84	8.02	8.07	0.05	15.86	NS-p	NS-p	NS-p	NS-p	NS-p	NS-p	NS-p
	18-Dec-07	23.84	18.13	18.31	0.18	5.85	NS-p	NS-p	NS-p	NS-p	NS-p	NS-p	NS-p
	6-Feb-08	23.84	18.21	18.29	0.08	5.89	NS-p	NS-p	NS-p	NS-p	NS-p	NS-p	NS-p
	4-Jun-08	23.84	NM	NM	NM	NM	NS-p	NS-p	NS-p	NS-p	NS-p	NS-p	NS-p
	29-Aug-08	23.84	15.94	16.95	1.01	8.66	NS-p	NS-p	NS-p	NS-p	NS-p	NS-p	NS-p
	25-Nov-08	23.84	14.4	15.24	0.84	10.07	NS-p	NS-p	NS-p	NS-p	NS-p	NS-p	NS-p
	11-Mar-09	23.84	15.03	15.70	0.67	9.31	NS-p	NS-p	NS-p	NS-p	NS-p	NS-p	NS-p
	20-May-09	23.84	14.11	14.11	0.00	9.73	NS-p	NS-p	NS-p	NS-p	NS-p	NS-p	NS-p
	24-Sep-09	23.84	13.90	14.45	0.55	9.94	NS-p	NS-p	NS-p	NS-p	NS-p	NS-p	NS-p
	7-Dec-09	23.84	13.58	13.72	0.14	10.37	NS-p	NS-p	NS-p	NS-p	NS-p	NS-p	NS-p
	23-Feb-10	23.84	13.46	13.75	0.29	10.60	NS-p	NS-p	NS-p	NS-p	NS-p	NS-p	NS-p
	2-Jun-10	23.84	14.30	14.82	0.52	9.93	NS-p	NS-p	NS-p	NS-p	NS-p	NS-p	NS-p
	8-Sep-10	23.84	15.04	15.53	0.49	9.17	NS-p	NS-p	NS-p	NS-p	NS-p	NS-p	NS-p
	17-Nov-10	23.84	14.55	14.98	0.43	9.61	NS-p	NS-p	NS-p	NS-p	NS-p	NS-p	NS-p
	14-Mar-11	23.84	14.43	14.84	0.41	9.72	NS-p	NS-p	NS-p	NS-p	NS-p	NS-p	NS-p
	17-May-11	23.84	14.08	14.10	0.02	9.78	NS-p	NS-p	NS-p	NS-p	NS-p	NS-p	NS-p
	28-Sep-11	23.84	12.25	12.66	0.41	11.90	NS-p	NS-p	NS-p	NS-p	NS-p	NS-p	NS-p
	20-Oct-11	23.84	13.88	14.08	0.40	10.48	NS-p	NS-p	NS-p	NS-p	NS-p	NS-p	NS-p
N-5	27-Mar-06	27.56	NP	9.92	0.00	17.64	NS-g	NS-g	NS-g	NS-g	NS-g	NS-g	NS-g
	13-Jun-06	27.56	NP	9.02	0.00	18.54	NS-g	NS-g	NS-g	NS-g	NS-g	NS-g	NS-g
	21-Aug-06	27.56	NP	9.53	0.00	18.03	NS-g	NS-g	NS-g	NS-g	NS-g	NS-g	NS-g
	12-Dec-06	27.56	NP	9.35	0.00	18.21	NS-p	NS-p	NS-p	NS-p	NS-p	NS-p	NS-p
	9-Mar-07	27.56	NP	9.17	0.00	18.39	NS-g	NS-g	NS-g	NS-g	NS-g	NS-g	NS-g
	20-Jun-07	27.56	NP	9.30	0.00	18.26	NS-g	NS-g	NS-g	NS-g	NS-g	NS-g	NS-g
	21-Sep-07	27.56	NP	10.50	0.00	17.06	NS-g	NS-g	NS-g	NS-g	NS-g	NS-g	NS-g
	18-Dec-07	27.56	NP	9.42	0.00	18.14	NS-g	NS-g	NS-g	NS-g	NS-g	NS-g	NS-g
	6-Feb-08	27.56	NP	8.96	0.00	18.60	ND (0.5)	ND (0.5)	NS-g	NS-g	NS-g	NS-g	NS-g
	4-Jun-08	27.56	NP	8.95	0.00	18.61	NS-g	NS-g	NS-g	NS-g	NS-g	NS-g	NS-g
	29-Aug-08	27.56	NP	9.46	0.00	18.10	NS-g	NS-g	NS-g	NS-g	NS-g	NS-g	NS-g
	25-Nov-08	27.56	NP	9.12	0.00	18.44	NS-g	NS-g	NS-g	NS-g	NS-g	NS-g	NS-g
	11-Mar-09	27.56	NP	9.75	0.00	17.81	NS-g	NS-g	NS-g	NS-g	NS-g	NS-g	NS-g
	20-May-09	27.56	NP	9.08	0.00	18.48	NS-g	NS-g	NS-g	NS-g	NS-g	NS-g	NS-g
	24-Sep-09	27.56	NP	9.04	0.00	18.52	NS-g	NS-g	NS-g	NS-g	NS-g	NS-g	NS-g
	7-Dec-09	27.56	NP	8.83	0.00	18.73	NS-g	NS-g	NS-g	NS-g	NS-g	NS-g	NS-g
	23-Feb-10	27.56	NP	8.32	0.00	19.24	NS-g	NS-g	NS-g	NS-g	NS-g	NS-g	NS-g
	2-Jun-10	27.56	NP	9.41	0.00	18.15	NS-g	NS-g	NS-g	NS-g	NS-g	NS-g	NS-g
	8-Sep-10	27.56	NP	9.98	0.00	17.58	NS-g	NS-g	NS-g	NS-g	NS-g	NS-g	NS-g
	9-Nov-10	27.56	NP	9.30	0.00	18.26	NS-g	NS-g	NS-g	NS-g	NS-g	NS-g	NS-g
	14-Mar-11	27.56	NP	8.26	0.00	19.30	NS-g	NS-g	NS-g	NS-g	NS-g	NS-g	NS-g
	17-May-11	27.56	NP	14.67	0.00	12.89	NS-g	NS-g	NS-g	NS-g	NS-g	NS-g	NS-g
	28-Sep-11	27.56	NP	8.43	0.00	19.13	NS-g	NS-g	NS-g	NS-g	NS-g	NS-g	NS-g
	20-Oct-11	27.56	NP	9.32	0.00	18.24	NS-g	NS-g	NS-g	NS-g	NS-g	NS-g	NS-g

Table 1. Historical Groundwater Monitoring Data Summary
Post-Closure Monitoring
Sunoco, Inc (R&M)
Point Breeze Processing Area Land Treatment Unit

Aquaterra Technologies, Inc.

Well ID	Date	Casing Elevation (feet)	Depth to Product (feet)	Depth to Water (feet)	Product Thickness (feet)	Product Adjusted Groundwater Elevation (feet)	Benzene (µg/L)	Toluene (µg/L)	Oil & Grease (mg/L)	Total Chromium (mg/L)	Total Mercury (mg/L)	pH	Specific Conductance (umhos/cm)
N-10	27-Mar-06	21.06	NP	4.19	0.00	16.87	NS-g	NS-g	NS-g	NS-g	NS-g	NS-g	NS-g
	13-Jun-06	21.06	NP	3.58	0.00	17.48	NS-g	NS-g	NS-g	NS-g	NS-g	NS-g	NS-g
	21-Aug-06	21.06	NP	5.78	0.00	15.28	NS-g	NS-g	NS-g	NS-g	NS-g	NS-g	NS-g
	12-Dec-06	21.06	NP	4.98	0.00	16.08	NS-g	NS-g	NS-g	NS-g	NS-g	NS-g	NS-g
	9-Mar-07	21.06	NP	5.04	0.00	16.02	NS-g	NS-g	NS-g	NS-g	NS-g	NS-g	NS-g
	20-Jun-07	21.06	NP	4.89	0.00	16.17	NS-g	NS-g	NS-g	NS-g	NS-g	NS-g	NS-g
	21-Sep-07	21.06	NP	8.52	0.00	14.54	NS-g	NS-g	NS-g	NS-g	NS-g	NS-g	NS-g
	18-Dec-07	21.06	NP	4.77	0.00	16.29	NS-g	NS-g	NS-g	NS-g	NS-g	NS-g	NS-g
	6-Feb-08	21.06	NP	4.41	0.00	16.65	ND (0.5)	ND (0.5)	NS-g	NS-g	NS-g	NS-g	NS-g
	4-Jun-08	21.06	NP	3.94	0.00	17.12	NS-g	NS-g	NS-g	NS-g	NS-g	NS-g	NS-g
	29-Aug-08	21.06	NP	5.98	0.00	15.08	NS-g	NS-g	NS-g	NS-g	NS-g	NS-g	NS-g
	25-Nov-08	21.06	NP	5.53	0.00	15.53	NS-g	NS-g	NS-g	NS-g	NS-g	NS-g	NS-g
	11-Mar-09	21.06	NP	5.73	0.00	15.33	NS-g	NS-g	NS-g	NS-g	NS-g	NS-g	NS-g
	20-May-09	21.06	NP	4.35	0.00	16.71	NS-g	NS-g	NS-g	NS-g	NS-g	NS-g	NS-g
	24-Sep-09	21.06	NP	4.45	0.00	16.61	NS-g	NS-g	NS-g	NS-g	NS-g	NS-g	NS-g
	7-Dec-09	21.06	NP	3.41	0.00	17.65	NS-g	NS-g	NS-g	NS-g	NS-g	NS-g	NS-g
	23-Feb-10	21.06	NP	2.34	0.00	18.72	NS-g	NS-g	NS-g	NS-g	NS-g	NS-g	NS-g
	2-Jun-10	21.06	NP	5.45	0.00	15.61	NS-g	NS-g	NS-g	NS-g	NS-g	NS-g	NS-g
	8-Sep-10	21.06	NP	5.87	0.00	15.19	NS-g	NS-g	NS-g	NS-g	NS-g	NS-g	NS-g
	9-Nov-10	21.06	NP	4.79	0.00	16.27	NS-g	NS-g	NS-g	NS-g	NS-g	NS-g	NS-g
	14-Mar-11	21.06	NP	2.90	0.00	18.16	NS-g	NS-g	NS-g	NS-g	NS-g	NS-g	NS-g
	17-May-11	21.06	NP	4.82	0.00	16.24	NS-g	NS-g	NS-g	NS-g	NS-g	NS-g	NS-g
	28-Sep-11	21.06	NP	2.47	0.00	18.59	NS-g	NS-g	NS-g	NS-g	NS-g	NS-g	NS-g
	20-Oct-11	21.06	NP	4.04	0.00	17.02	NS-g	NS-g	NS-g	NS-g	NS-g	NS-g	NS-g
N-11	27-Mar-06	30.48	NP	18.82	0.00	11.66	6.5	8.2	<5.3	0.22	0.00045	6.75	1,100
	13-Jun-06	30.48	NP	18.28	0.00	12.20	8.1	9.7	<5.1	0.20	0.0003	6.4	930
	21-Aug-06	30.48	NP	19.78	0.00	10.70	7.4	<10	8.0	0.07	<0.00020	6.82	1,000
	12-Dec-06	30.48	NP	18.47	0.00	12.01	7.8	12	13.0	0.09	<0.00020	6.81	1,400
	9-Mar-07	30.48	NP	18.53	0.00	11.95	7.6	12	7.2	0.13	<0.00020	6.94	1,000
	20-Jun-07	30.48	NP	18.38	0.00	12.10	7	11	<5.0	0.11	<0.00020	6.8	1,190
	21-Sep-07	30.48	NP	19.15	0.00	11.33	8	11	9.4	0.02	<0.00020	6.8	1,410
	18-Dec-07	30.48	NP	18.74	0.00	11.74	7	12	5.2	0.0170	<0.00020	6.8	1,210
	6-Feb-08	30.48	NP	18.55	0.00	11.93	10	11	<5.0	0.1470	<0.00020	6.8	1,040
	4-Jun-08	30.48	NP	18.48	0.00	12.00	8	12	<5.0	0.0539	<0.00020	6.8	916
	29-Aug-08	30.48	NP	19.04	0.00	11.44	5	8	<5.0	0.4760	<0.0010	6.8	826
	25-Nov-08	30.48	NP	18.91	0.00	11.57	<20	<20	6.2	0.0548	<0.0010	6.8	814
	11-Mar-09	30.48	NP	18.98	0.00	11.50	<5	7	<5.0	0.0362	<0.0020	6.9	880
	20-May-09	30.48	NP	18.22	0.00	12.26	5	8	<5.0	0.0625	<0.0020	6.7	937
	24-Sep-09	30.48	NP	18.20	0.00	12.28	48	9	<5.0	<0.0150	<0.0020	6.9	1,120
	7-Dec-09	30.48	NP	18.37	0.00	12.11	4	6	<5.0	0.1090	<0.0020	6.7	1,540
	23-Feb-10	30.48	NP	17.69	0.00	12.79	4	8	<5.0	0.0894	<0.0020	7.13	1,910
	2-Jun-10	30.48	NP	18.57	0.00	11.91	4	7	<5.0	0.0960	<0.0020	6.7	2,350
	8-Sep-10	30.48	NP	18.94	0.00	11.54	3	5	<5.0	0.0593	<0.0020	6.7	1,040
	9-Nov-10	30.48	NP	18.63	0.00	11.85	2	5	<5.0	0.299	<0.0020	6.8	840
	14-Mar-11	30.48	NP	17.51	0.00	12.97	3	6	<5.0	0.0152	<0.0020	6.8	1,250
	17-May-11	30.48	NP	18.45	0.00	12.03	7	6	5.2	<0.0150	<0.0020	6.9	1,710
	28-Sep-11	30.48	NP	17.06	0.00	13.42	<10	<10	<5.0	<0.0150	<0.00020	6.7	662
	20-Oct-11	30.48	NP	18.02	0.00	12.46	5	5	<5.0	0.1390	<0.00020	6.9	806

Table 1. Historical Groundwater Monitoring Data Summary
Post-Closure Monitoring
Sunoco, Inc (R&M)
Point Breeze Processing Area Land Treatment Unit

Aquaterra Technologies, Inc.

Well ID	Date	Casing Elevation (feet)	Depth to Product (feet)	Depth to Water (feet)	Product Thickness (feet)	Product Adjusted Groundwater Elevation (feet)	Benzene (µg/L)	Toluene (µg/L)	Oil & Grease (mg/L)	Total Chromium (mg/L)	Total Mercury (mg/L)	pH	Specific Conductance (umhos/cm)
N-24	27-Mar-06	21.17	NP	12.56	0.00	8.61	NS-g	NS-g	NS-g	NS-g	NS-g	NS-g	NS-g
	13-Jun-06	21.17	NP	11.12	0.00	10.05	NS-g	NS-g	NS-g	NS-g	NS-g	NS-g	NS-g
	21-Aug-06	21.17	NP	12.37	0.00	8.80	NS-g	NS-g	NS-g	NS-g	NS-g	NS-g	NS-g
	12-Dec-06	21.17	NP	12.34	0.00	8.83	NS-g	NS-g	NS-g	NS-g	NS-g	NS-g	NS-g
	9-Mar-07	21.17	NP	12.06	0.00	9.11	NS-g	NS-g	NS-g	NS-g	NS-g	NS-g	NS-g
	20-Jun-07	21.17	NP	12.1	0.00	9.07	NS-g	NS-g	NS-g	NS-g	NS-g	NS-g	NS-g
	21-Sep-07	21.17	NP	12.42	0.00	8.75	NS-g	NS-g	NS-g	NS-g	NS-g	NS-g	NS-g
	18-Dec-07	21.17	NP	12.31	0.00	8.86	NS-g	NS-g	NS-g	NS-g	NS-g	NS-g	NS-g
	7-Feb-08	21.17	NP	12.02	0.00	9.15	0.08	ND (0.5)	NS-g	NS-g	NS-g	NS-g	NS-g
	4-Jun-08	21.17	NP	11.89	0.00	9.28	NS-g	NS-g	NS-g	NS-g	NS-g	NS-g	NS-g
	29-Aug-08	21.17	NP	12.33	0.00	8.84	NS-g	NS-g	NS-g	NS-g	NS-g	NS-g	NS-g
	25-Nov-08	21.17	NP	12.11	0.00	9.06	NS-g	NS-g	NS-g	NS-g	NS-g	NS-g	NS-g
	11-Mar-09	21.17	NP	12.22	0.00	8.95	NS-g	NS-g	NS-g	NS-g	NS-g	NS-g	NS-g
	20-May-09	21.17	NP	11.83	0.00	9.34	NS-g	NS-g	NS-g	NS-g	NS-g	NS-g	NS-g
	24-Sep-09	21.17	NP	12.22	0.00	8.95	NS-g	NS-g	NS-g	NS-g	NS-g	NS-g	NS-g
	7-Dec-09	21.17	NP	12.18	0.00	8.99	NS-g	NS-g	NS-g	NS-g	NS-g	NS-g	NS-g
	23-Feb-10	21.17	NP	10.63	0.00	10.54	NS-g	NS-g	NS-g	NS-g	NS-g	NS-g	NS-g
	2-Jun-10	21.17	NP	12.42	0.00	8.75	NS-g	NS-g	NS-g	NS-g	NS-g	NS-g	NS-g
	8-Sep-10	21.17	NP	12.26	0.00	8.91	NS-g	NS-g	NS-g	NS-g	NS-g	NS-g	NS-g
	9-Nov-10	21.17	NP	11.74	0.00	9.43	NS-g	NS-g	NS-g	NS-g	NS-g	NS-g	NS-g
	14-Mar-11	21.17	NP	10.88	0.00	10.29	NS-g	NS-g	NS-g	NS-g	NS-g	NS-g	NS-g
	17-May-11	21.17	NP	11.01	0.00	10.16	NS-g	NS-g	NS-g	NS-g	NS-g	NS-g	NS-g
	28-Sep-11	21.17	NP	10.81	0.00	10.36	NS-g	NS-g	NS-g	NS-g	NS-g	NS-g	NS-g
	20-Oct-11	21.17	NP	12.17	0.00	9.00	NS-g	NS-g	NS-g	NS-g	NS-g	NS-g	NS-g
N-77	27-Mar-06	20.74	NP	8.72	0.00	12.02	NS-g	NS-g	NS-g	NS-g	NS-g	NS-g	NS-g
	13-Jun-06	20.74	NP	6.25	0.00	14.49	NS-g	NS-g	NS-g	NS-g	NS-g	NS-g	NS-g
	21-Aug-06	20.74	NP	8.25	0.00	12.49	NS-g	NS-g	NS-g	NS-g	NS-g	NS-g	NS-g
	12-Dec-06	20.74	NP	7.89	0.00	12.85	NS-g	NS-g	NS-g	NS-g	NS-g	NS-g	NS-g
	9-Mar-07	20.74	NP	6.82	0.00	13.92	NS-g	NS-g	NS-g	NS-g	NS-g	NS-g	NS-g
	20-Jun-07	20.74	NP	7.74	0.00	13.00	NS-g	NS-g	NS-g	NS-g	NS-g	NS-g	NS-g
	21-Sep-07	20.74	NP	8.79	0.00	11.95	NS-g	NS-g	NS-g	NS-g	NS-g	NS-g	NS-g
	18-Dec-07	20.74	NP	7.32	0.00	13.42	NS-g	NS-g	NS-g	NS-g	NS-g	NS-g	NS-g
	7-Feb-08	20.74	NP	6.83	0.00	13.91	ND (0.5)	ND (0.5)	NS-g	NS-g	NS-g	NS-g	NS-g
	4-Jun-08	20.74	NP	NM	0.00	NM	NS-g	NS-g	NS-g	NS-g	NS-g	NS-g	NS-g
	29-Aug-08	20.74	NP	8.03	0.00	12.71	NS-g	NS-g	NS-g	NS-g	NS-g	NS-g	NS-g
	25-Nov-08	20.74	NP	7.12	0.00	13.62	NS-g	NS-g	NS-g	NS-g	NS-g	NS-g	NS-g
	11-Mar-09	20.74	NP	7.96	0.00	12.78	NS-g	NS-g	NS-g	NS-g	NS-g	NS-g	NS-g
	20-May-09	20.74	NP	6.52	0.00	14.22	NS-g	NS-g	NS-g	NS-g	NS-g	NS-g	NS-g
	24-Sep-09	20.74	NP	7.53	0.00	13.21	NS-g	NS-g	NS-g	NS-g	NS-g	NS-g	NS-g
	7-Dec-09	20.74	NP	NM	0.00	NM	NS-g	NS-g	NS-g	NS-g	NS-g	NS-g	NS-g
	23-Feb-10	20.74	NP	NM	0.00	NM	NS-g	NS-g	NS-g	NS-g	NS-g	NS-g	NS-g
	2-Jun-10	20.74	NP	8.36	0.00	12.38	NS-g	NS-g	NS-g	NS-g	NS-g	NS-g	NS-g
	8-Sep-10	20.74	NP	8.11	0.00	12.63	NS-g	NS-g	NS-g	NS-g	NS-g	NS-g	NS-g
	9-Nov-10	20.74	NP	6.50	0.00	14.24	NS-g	NS-g	NS-g	NS-g	NS-g	NS-g	NS-g
	14-Mar-11	20.47	NP	5.35	0.00	15.12	NS-g	NS-g	NS-g	NS-g	NS-g	NS-g	NS-g
	17-May-11	20.47	NP	8.05	0.00	12.42	NS-g	NS-g	NS-g	NS-g	NS-g	NS-g	NS-g
	28-Sep-11	20.47	NP	5.25	0.00	15.22	NS-g	NS-g	NS-g	NS-g	NS-g	NS-g	NS-g
	20-Oct-11	20.47	NP	7.93	0.00	12.54	NS-g	NS-g	NS-g	NS-g	NS-g	NS-g	NS-g

Table 1. Historical Groundwater Monitoring Data Summary
Post-Closure Monitoring
Sunoco, Inc (R&M)
Point Breeze Processing Area Land Treatment Unit

Aquaterra Technologies, Inc.

Well ID	Date	Casing Elevation (feet)	Depth to Product (feet)	Depth to Water (feet)	Product Thickness (feet)	Product Adjusted Groundwater Elevation (feet)	Benzene (µg/L)	Toluene (µg/L)	Oil & Grease (mg/L)	Total Chromium (mg/L)	Total Mercury (mg/L)	pH	Specific Conductance (umhos/cm)
N-83	27-Mar-06	23.73	NP	15.98	0.00	7.75	NS-g	NS-g	NS-g	NS-g	NS-g	NS-g	NS-g
	13-Jun-06	23.73	NP	15.37	0.00	8.36	NS-g	NS-g	NS-g	NS-g	NS-g	NS-g	NS-g
	21-Aug-06	23.73	NP	17.39	0.00	6.34	NS-g	NS-g	NS-g	NS-g	NS-g	NS-g	NS-g
	12-Dec-06	23.73	NP	6.30	0.00	17.43	NS-g	NS-g	NS-g	NS-g	NS-g	NS-g	NS-g
	9-Mar-07	23.73	NP	5.70	0.00	18.03	NS-g	NS-g	NS-g	NS-g	NS-g	NS-g	NS-g
	20-Jun-07	23.73	NP	5.78	0.00	17.95	NS-g	NS-g	NS-g	NS-g	NS-g	NS-g	NS-g
	21-Sep-07	23.73	NP	6.45	0.00	17.28	NS-g	NS-g	NS-g	NS-g	NS-g	NS-g	NS-g
	18-Dec-07	23.73	NP	5.19	0.00	18.54	NS-g	NS-g	NS-g	NS-g	NS-g	NS-g	NS-g
	6-Feb-08	23.73	NP	15.12	0.00	8.61	ND (0.5)	ND (0.5)	NS-g	NS-g	NS-g	NS-g	NS-g
	4-Jun-08	23.73	NP	5.47	0.00	18.26	NS-g	NS-g	NS-g	NS-g	NS-g	NS-g	NS-g
	29-Aug-08	23.73	NP	6.43	0.00	17.30	NS-g	NS-g	NS-g	NS-g	NS-g	NS-g	NS-g
	25-Nov-08	23.73	NP	15.56	0.00	8.17	NS-g	NS-g	NS-g	NS-g	NS-g	NS-g	NS-g
	11-Mar-09	23.73	NP	15.69	0.00	8.04	NS-g	NS-g	NS-g	NS-g	NS-g	NS-g	NS-g
	20-May-09	23.73	NP	15.31	0.00	8.42	NS-g	NS-g	NS-g	NS-g	NS-g	NS-g	NS-g
	24-Sep-09	23.73	NP	14.61	0.00	9.12	NS-g	NS-g	NS-g	NS-g	NS-g	NS-g	NS-g
	7-Dec-09	23.73	NP	14.79	0.00	8.94	NS-g	NS-g	NS-g	NS-g	NS-g	NS-g	NS-g
	23-Feb-10	23.73	NP	15.18	0.00	8.55	NS-g	NS-g	NS-g	NS-g	NS-g	NS-g	NS-g
	2-Jun-10	23.73	NP	15.25	0.00	8.48	NS-g	NS-g	NS-g	NS-g	NS-g	NS-g	NS-g
	8-Sep-10	23.73	NP	15.47	0.00	8.26	NS-g	NS-g	NS-g	NS-g	NS-g	NS-g	NS-g
	9-Nov-10	23.73	NP	15.44	0.00	8.29	NS-g	NS-g	NS-g	NS-g	NS-g	NS-g	NS-g
	14-Mar-11	23.73	NP	15.24	0.00	8.49	NS-g	NS-g	NS-g	NS-g	NS-g	NS-g	NS-g
	17-May-11	23.73	NP	15.22	0.00	8.51	NS-g	NS-g	NS-g	NS-g	NS-g	NS-g	NS-g
	28-Sep-11	23.73	NP	13.77	0.00	9.96	NS-g	NS-g	NS-g	NS-g	NS-g	NS-g	NS-g
	20-Oct-11	23.73	NP	14.64	0.00	9.09	NS-g	NS-g	NS-g	NS-g	NS-g	NS-g	NS-g
N-89	27-Mar-06	27.14	14.16	14.17	0.01	12.99	NS-g	NS-g	NS-g	NS-g	NS-g	NS-g	NS-g
	13-Jun-06	27.14	NM-I	NM-I	NM-I	NM-I	NG-I	NG-I	NG-I	NG-I	NG-I	NG-I	NG-I
	21-Aug-06	27.14	14.19	14.20	0.01	12.96	NS-g	NS-g	NS-g	NS-g	NS-g	NS-g	NS-g
	12-Dec-06	27.14	13.76	13.81	0.05	13.42	NS-g	NS-g	NS-g	NS-g	NS-g	NS-g	NS-g
	9-Mar-07	27.14	NM	NM	NM	NM	NS-g	NS-g	NS-g	NS-g	NS-g	NS-g	NS-g
	20-Jun-07	27.14	13.62	13.68	0.02	13.54	NS-g	NS-g	NS-g	NS-g	NS-g	NS-g	NS-g
	21-Sep-07	27.14	14.34	14.38	0.04	12.83	NS-g	NS-g	NS-g	NS-g	NS-g	NS-g	NS-g
	18-Dec-07	27.14	NP	14.47	0.00	12.67	NS-g	NS-g	NS-g	NS-g	NS-g	NS-g	NS-g
	8-Feb-08	27.14	NP	NM	NM	NM	NS-g	NS-g	NS-g	NS-g	NS-g	NS-g	NS-g
	4-Jun-08	27.14	NP	14.00	0.00	13.14	NS-g	NS-g	NS-g	NS-g	NS-g	NS-g	NS-g
	29-Aug-08	27.14	NP	14.18	0.00	12.96	NS-g	NS-g	NS-g	NS-g	NS-g	NS-g	NS-g
	25-Nov-08	27.14	NP	14.33	0.00	12.81	NS-g	NS-g	NS-g	NS-g	NS-g	NS-g	NS-g
	11-Mar-09	27.14	NP	14.29	0.00	12.85	NS-g	NS-g	NS-g	NS-g	NS-g	NS-g	NS-g
	20-May-09	27.14	NP	14.04	0.00	13.1	NS-g	NS-g	NS-g	NS-g	NS-g	NS-g	NS-g
	24-Sep-09	27.14	NP	NM	NM	NM	NS-g	NS-g	NS-g	NS-g	NS-g	NS-g	NS-g
	7-Dec-09	27.14	NP	damaged	NM	NM	NS-g	NS-g	NS-g	NS-g	NS-g	NS-g	NS-g
	23-Feb-10	27.14	NP	damaged	NM	NM	NS-g	NS-g	NS-g	NS-g	NS-g	NS-g	NS-g
	2-Jun-10	27.14	NP	damaged	NM	NM	NS-g	NS-g	NS-g	NS-g	NS-g	NS-g	NS-g
	8-Sep-10	27.14	NP	damaged	NM	NM	NS-g	NS-g	NS-g	NS-g	NS-g	NS-g	NS-g
	9-Nov-10	27.14	NP	damaged	NM	NM	NS-g	NS-g	NS-g	NS-g	NS-g	NS-g	NS-g
	14-Mar-11	27.14	NP	damaged	NM	NM	NS-g	NS-g	NS-g	NS-g	NS-g	NS-g	NS-g
	17-May-11	27.14	NP	damaged	NM	NM	NS-g	NS-g	NS-g	NS-g	NS-g	NS-g	NS-g
	28-Sep-11	27.14	NP	damaged	NM	NM	NS-g	NS-g	NS-g	NS-g	NS-g	NS-g	NS-g
	20-Oct-11	27.14	NP	damaged	NM	NM	NS-g	NS-g	NS-g	NS-g	NS-g	NS-g	NS-g

NS-g = Not Sampled, gauge only
NP = No Product
NM-I = Not Measured, inaccessible
NG-I = Not Gauged, inaccessible
NS-p = Not Sampled due to presence of product
Oil & Grease sample from MW-4 was resampled on 1-2-07 due to broken bottle ware during the original sampling event.
Liquid levels collected on 12 December 2006 and samples collected 13 December 2006.
1st Quarter 2008 samples collected on 6-Feb-08 for benzene and toluene, and on 23-Apr-08 for other compounds.
Bold values exceed the PADEP Statewide Health Standard MSCs.
N-89 - blockage in well at approximately 4' below casing.

Table 2. Surface Water Runoff Monitoring Data Summary
Closure Monitoring
Sunoco, Inc (R&M)
Point Breeze Processing Area Land Treatment Unit

Aquaterra Technologies, Inc.

Outfall Location	Date	Benzene (µg/L)	Toluene (µg/L)	Oil & Grease (mg/L)	Total Chromium (mg/L)	Total Mercury (mg/L)	pH	Specific Conductance (µmhos/cm)	Total Nitrate/ Nitrite Nitrogen (mg/L)	Total Suspended Solids (mg/L)	Biochemical Oxygen Demand (mg/L)
A	16-Nov-06	<500	<500	<5.0	0.261	0.00021	7.4	3,800	0.64	918	38.1
	16-Mar-07	<1.0	<1.0	26	0.64	0.0013	7.75	600	5.1	1,300	NA
	4-Jun-07	2.8	<1.0	<5.0	0.26	<0.00020	7.46	2,120	21	4,200	56
	27-Sep-07	<5	<5	10.8	0.161	<0.00020	8	1,500	0.42	7,700	61.5
	18-Dec-07	<50	<50	18.3	0.166	<0.00020	7.3	2,760	22.6	1,580	185
	7-Feb-08	<20	<20	5.2	0.0889	0.000047	7.5	4,370	3.6	640	30.9
	20-Mar-08	2	<1	<5.0	<0.0150	<0.00020	7.2	1,670	2.7	*<30.0	<7.3
	9-May-08	<10	<10	<5.0	<0.0150	<0.00020	7.6	2,520	16.7	131	49.2
	26-Sep-08	<10	<10	<5.0	0.0453	<0.00020	8.3	1,780	0.80	92	7.7
	25-Nov-08	<1	<1	<5.0	<0.0150	<0.00020	7.8	1,140	0.94	<12.0	6.6
	26-Mar-09	<20	<20	7.6	0.0203	0.00023	7.3	4,980	13.0	12.4	16.2
	15-May-09	<10	<10	<5.0	<0.0150	<0.00020	7.4	2,710	7.0	<12.0	<4.1
	24-Sep-09	3	<1	<5.0	<0.0150	<0.00020	7.8	2,230	<0.50	<24.0	36.9
	3-Dec-09	<1	<1	<5.0	0.0322	<0.00020	7.4	1,080	NA	51.3	11.8
	23-Feb-10	<1	<1	<5.0	<0.0150	<0.00020	7.4	354	0.68	71.2	<1.9
	28-May-10	<10	<10	6.9	<0.0150	<0.00020	8.3	2,340	<1.0	65.6	67.9
	17-Sep-10	<1	<1	<5.0	<0.0150	<0.00020	8.0	1,370	<1.0	30.0	32.8
	17-Nov-10	<10	<10	<5.0	<0.0150	<0.00020	7.9	1,870	1.8	<12.0	<2.8
	25-Feb-11	<1	<1	<5.0	<0.0150	<0.00020	7.4	439	1.3	54.0	<3.7
	17-May-11	<5	<5	<5.0	<0.0150	<0.00020	7.9	2,340	11.2	<12.0	<8.9
	18-Aug-11	<1	<1	<5.0	<0.0150	<0.00020	7.5	458	1.3	<12.0	<5.6
	17-Nov-11	<1	<1	<5.0	<0.0150	<0.00020	7.7	2,330	<0.10	<12.0	15.8
B	16-Nov-06	NS-I	NS-I	NS-I	NS-I	NS-I	NS-I	NS-I	NS-I	NS-I	NS-I
	16-Mar-07	<1.0	<1.0	<5.0	0.025	<0.00020	7.67	480	3.7	150	NA
	4-Jun-07	DRY	DRY	DRY	DRY	DRY	DRY	DRY	DRY	DRY	DRY
	27-Sep-07	DRY	DRY	DRY	DRY	DRY	DRY	DRY	DRY	DRY	DRY
	18-Dec-07	DRY	DRY	DRY	DRY	DRY	DRY	DRY	DRY	DRY	DRY
	7-Feb-08	DRY	DRY	DRY	DRY	DRY	DRY	DRY	DRY	DRY	DRY
	20-Mar-08	1	<1	<5.0	<0.0150	<0.00020	7.4	494	<0.10	355	<7.0
	9-May-08	DRY	DRY	DRY	DRY	DRY	DRY	DRY	DRY	DRY	DRY
	26-Sep-08	DRY	DRY	DRY	DRY	DRY	DRY	DRY	DRY	DRY	DRY
	25-Nov-08	DRY	DRY	DRY	DRY	DRY	DRY	DRY	DRY	DRY	DRY
	26-Mar-09	DRY	DRY	DRY	DRY	DRY	DRY	DRY	DRY	DRY	DRY
	15-May-09	DRY	DRY	DRY	DRY	DRY	DRY	DRY	DRY	DRY	DRY
	24-Sep-09	DRY	DRY	DRY	DRY	DRY	DRY	DRY	DRY	DRY	DRY
	3-Dec-09	DRY	DRY	DRY	DRY	DRY	DRY	DRY	DRY	DRY	DRY
	23-Feb-10	DRY	DRY	DRY	DRY	DRY	DRY	DRY	DRY	DRY	DRY
	28-May-10	DRY	DRY	DRY	DRY	DRY	DRY	DRY	DRY	DRY	DRY
	17-Sep-10	DRY	DRY	DRY	DRY	DRY	DRY	DRY	DRY	DRY	DRY
	17-Nov-10	DRY	DRY	DRY	DRY	DRY	DRY	DRY	DRY	DRY	DRY
	25-Feb-11	DRY	DRY	DRY	DRY	DRY	DRY	DRY	DRY	DRY	DRY
	17-May-11	DRY	DRY	DRY	DRY	DRY	DRY	DRY	DRY	DRY	DRY
	18-Aug-11	DRY	DRY	DRY	DRY	DRY	DRY	DRY	DRY	DRY	DRY
	17-Nov-11	DRY	DRY	DRY	DRY	DRY	DRY	DRY	DRY	DRY	DRY

Table 2. Surface Water Runoff Monitoring Data Summary
Closure Monitoring
Sunoco, Inc (R&M)
Point Breeze Processing Area Land Treatment Unit

Aquaterra Technologies, Inc.

Outfall Location	Date	Benzene (µg/L)	Toluene (µg/L)	Oil & Grease (mg/L)	Total Chromium (mg/L)	Total Mercury (mg/L)	pH	Specific Conductance (µmhos/cm)	Total Nitrate/ Nitrite Nitrogen (mg/L)	Total Suspended Solids (mg/L)	Biochemical Oxygen Demand (mg/L)
C	16-Nov-06	<50	<50	9	0.472	0.0014	7.8	3,390	1.2	2,210	20.3
	16-Mar-07	<1.0	<1.0	11	5.30	0.0039	7.83	1,000	8.5	6,500	NA
	4-Jun-07	<1.0	<1.0	20	0.59	0.0011	7.62	3,120	21	5,100	17
	27-Sep-07	<5	<5	16.3	3.84	<0.0010	7.8	2,170	0.52	17,200	190
	18-Dec-07	<20	<20	9.9	0.891	0.0006	7.5	3,780	16.3	5,650	41.1
	7-Feb-08	<20	<20	17.6	0.0765	0.00025	7.8	4,010	14.7	605	54.3
	20-Mar-08	<1	<1	<5.0	<0.0150	<0.00020	7.7	3,380	4.0	*<120	<7.4
	9-May-08	<1	<1	<5.0	<0.0150	<0.00020	7.3	2,970	6.0	29.0	6.1
	26-Sep-08	<10	<10	6.7	0.0593	<0.00020	8.1	1,920	0.63	118	7.7
	25-Nov-08	<10	<10	5.4	<0.0150	<0.00020	7.9	3,260	6.7	<12.0	4.3
	26-Mar-09	<10	<10	<5.0	<0.0150	<0.0010	7.8	4,390	15.0	<12.0	<11.3
	15-May-09	<10	<10	<5.0	<0.0150	<0.00020	7.3	2,450	7.0	<12.0	8.6
	24-Sep-09	<1	<1	5.2	<0.0150	<0.00020	7.9	3,430	1.9	<12.0	<2.2
	3-Dec-09	<1	<1	<5.0	<0.0150	<0.00020	7.5	1,410	NA	17.2	8.5
	23-Feb-10	<1	<1	<5.0	<0.0150	<0.00020	7.73	246	0.19	27.6	<2.2
	28-May-10	<10	<10	10.5	<0.0150	<0.00020	7.4	3,230	<1.0	<30.0	416
	17-Sep-10	<1	<1	<5.0	<0.0150	<0.00020	8.1	2,080	<1.0	<12.0	21.1
	17-Nov-10	<10	<10	<5.0	<0.0150	<0.00020	7.8	3,350	<0.50	49.2	7.5
	25-Feb-11	<1	<1	<5.0	<0.0150	<0.00020	7.3	469	1.2	<12.0	<3.5
	17-May-11	<5	<5	<5.0	<0.0150	<0.00020	7.7	3,120	10.9	<12.0	<9.8
	18-Aug-11	<1	<1	<5.0	<0.0150	<0.00020	7.4	905	5.0	<12.0	<5.0
	17-Nov-11	<1	<1	<5.0	<0.0150	<0.00020	7.6	3,560	3.9	24.8	<5.7
D	16-Nov-06	<500	<500	6.6	0.580	0.00047	7.3	4,330	0.39	3,370	51.6
	16-Mar-07	<1.0	<1.0	<5.0	2.90	0.0061	7.75	640	12	3,300	NA
	4-Jun-07	<1.0	<1.0	8.1	0.69	0.00061	7.28	1,620	6.9	6,000	16
	27-Sep-07	<5	<5	7.2	0.25	<0.0020	8.1	2,490	0.77	843	16.2
	18-Dec-07	<100	<100	6.4	0.0493	<0.0020	7.4	4,550	6.3	360	47.2
	7-Feb-08	<20	<20	19.9	0.245	0.00099	7.4	4,750	6.1	1,260	51.0
	20-Mar-08	<1	<1	<5.0	0.0431	0.00026	7.7	2,250	1.6	*<75.0	<11.0
	9-May-08	<1	<1	<5.0	<0.0150	<0.00020	7.3	4,270	0.44	44.6	27.7
	26-Sep-08	<10	<10	6.7	0.0593	<0.00020	8.1	1,920	0.63	118	13.4
	25-Nov-08	<10	<10	10.1	0.0178	<0.00020	7.6	3,580	14.4	<12.0	<5.0
	26-Mar-09	ND (10)	ND (10)	ND (1.4)	0.0291	0.00013 J	7.1	5,690	1.6	143	8.2
	15-May-09	<10	<10	<5.0	<0.0150	<0.00020	7.5	2,410	2.4	18.4	60.2
	24-Sep-09	<10	<10	7.7	0.0325	<0.00020	7.2	4,980	4.3	34.0	16.4
	3-Dec-09	<1	<1	<5.0	<0.0150	<0.00020	7.5	1,450	NA	50.7	44.4
	23-Feb-10	<1	<1	<5.0	<0.0150	<0.00020	7.9	225	<0.10	<12.0	<1.9
	28-May-10	<10	<10	<5.0	0.0295	<0.00020	7.3	4,410	4.7	71.0	73.3
	17-Sep-10	<10	<10	<5.0	<0.0150	<0.00020	7.8	1,880	1.1	<12.0	11.4
	17-Nov-10	<10	<10	6.2	0.0184	<0.00020	7.5	3,640	4.2	20.0	22.0
	25-Feb-11	<1	<1	<5.0	<0.0150	<0.00020	7.5	364	<0.10	<12.0	<3.5
	17-May-11	<5	<5	<5.0	0.0208	<0.00020	7.8	3,330	16.3	12.8	50.0
	18-Aug-11	<1	<1	<5.0	<0.0150	<0.00020	7.6	439	1.6	<12.0	<4.9
	17-Nov-11	<1	<1	5.1	0.0167	<0.00020	7.6	3,530	3.9	24.4	41.1

Table 2. Surface Water Runoff Monitoring Data Summary
Closure Monitoring
Sunoco, Inc (R&M)
Point Breeze Processing Area Land Treatment Unit

Aquaterra Technologies, Inc.

Outfall Location	Date	Benzene (µg/L)	Toluene (µg/L)	Oil & Grease (mg/L)	Total Chromium (mg/L)	Total Mercury (mg/L)	pH	Specific Conductance (µmhos/cm)	Total Nitrate/ Nitrite Nitrogen (mg/L)	Total Suspended Solids (mg/L)	Biochemical Oxygen Demand (mg/L)
E	16-Nov-06	<20	<20	10.2	0.139	0.0037	7.9	1,980	1.1	3,570	38.1
	16-Mar-07	<1.0	<1.0	90	2.6	0.0074	8.39	500	11	2,400	NA
	4-Jun-07	1.1	<1.0	8.3	2.2	0.0054	7.59	949	27	6,900	52
	27-Sep-07	<5	<5	51.8	0.4	<0.0020	8.1	981	1.0	2,380	22.7
	18-Dec-07	<20	<20	21.9	4.72	0.0018	7.8	2,550	3.9	1,120	21.3
	7-Feb-08	<10	<10	10.6	0.682	0.00062	8.0	2,540	5.4	94.4	14.1
	20-Mar-08	<1	<1	<5.0	<0.0150	<0.00020	7.6	1,020	1.1	*<60.0	<2.9
	9-May-08	<1	<1	<5.0	<0.0150	<0.00020	7.4	1,940	0.18	71.6	4.8
	26-Sep-08	<10	<10	<5.0	0.0228	<0.00020	8.2	1,000	0.71	529	13.0
	25-Nov-08	<10	<10	5.6	<0.0150	<0.00020	8.3	3,470	1.6	<12.0	<5.4
	26-Mar-09	<1	<1	<5.0	<0.0150	<0.00020	8.1	3,190	4.2	<12.0	<5.0
	15-May-09	<10	<10	<5.0	<0.0150	<0.00020	7.7	935	0.29	<12.0	<2.9
	24-Sep-09	<1	<1	<5.0	<0.0150	<0.00020	8.1	2,290	<0.10	<12.0	11.7
	3-Dec-09	<1	<1	<5.0	<0.0150	<0.00020	7.7	688	NA	43.0	<3.0
	23-Feb-10	<1	<1	<5.0	<0.0150	<0.00020	7.99	188	<0.10	<12.0	<2.6
	28-May-10	<5	6	6.2	<0.0150	<0.00020	7.8	1,500	<1.0	23.6	13.8
	17-Sep-10	<1	<1	<5.0	<0.0150	<0.00020	7.9	1,430	<1.0	<12.0	11.7
	17-Nov-10	<10	<10	<5.0	<0.0150	<0.00020	8.1	1,930	1.1	<12.0	<4.3
	25-Feb-11	<1	<1	<5.0	<0.0150	<0.00020	7.3	448	0.24	<12.0	<2.7
	17-May-11	<1	<1	<5.0	<0.0150	<0.00020	8.0	1,620	1.5	<12.0	<5.1
	18-Aug-11	<1	<1	<5.0	<0.0150	<0.00020	7.4	637	<0.50	<12.0	<4.4
	17-Nov-11	<1	<1	<5.0	<0.0150	<0.00020	7.7	2,140	<0.10	19.2	13.8
F	16-Nov-06	<50	<50	<5.0	0.0272	<0.00020	7.9	2,920	1.2	107	44.9
	16-Mar-07	<1.0	<1.0	<5.0	1.6	0.0066	7.75	500	15	650	NA
	4-Jun-07	<1.0	<1.0	-	0.17	0.0004	7.66	1,330	18	250	12
	27-Sep-07	<5	<5	9.3	0.149	<0.00020	8	1,310	0.29	489	39.9
	18-Dec-07	<20	<20	8.8	0.13	<0.00020	7.5	2,720	5.8	110	<9.0
	7-Feb-08	<10	<10	7.2	0.0232	<0.00020	7.8	3,120	6.7	86.4	11.1
	20-Mar-08	<1	<1	<5.0	<0.0150	<0.00020	7.6	1,300	1.8	*<20.0	<5.5
	9-May-08	<1	<1	<5.0	<0.0150	<0.00020	7.6	2,390	2.2	14.4	4.9
	26-Sep-08	<10	<10	<5.0	<0.0150	<0.00020	8.1	1,010	0.93	112	8.3
	25-Nov-08	<1	<1	5.4	<0.0150	<0.00020	7.8	2,530	0.44	<12.0	<9.1
	26-Mar-09	<1	<1	<5.0	<0.0150	<0.00020	8.0	3,830	12.9	<12.0	<5.5
	15-May-09	<10	<10	<5.0	<0.0150	<0.00020	7.6	1,170	0.55	<12.0	<2.5
	24-Sep-09	<1	<1	<5.0	<0.0150	<0.00020	7.1	2,640	<0.10	<17.2	89.3
	3-Dec-09	<1	<1	<5.0	<0.0150	<0.00020	7.6	869	NA	<12.0	<4.3
	23-Feb-10	<1	<1	<5.0	<0.0150	<0.00020	8.2	214	<0.10	<12.0	<2.0
	28-May-10	<5	<5	<5.0	<0.0150	<0.00020	7.9	1,310	<1.0	20.8	19.5
	17-Sep-10	<1	<1	<5.0	<0.0150	<0.00020	7.7	1,420	<1.0	<12.0	22.1
	17-Nov-10	<10	<10	<5.0	<0.0150	<0.00020	7.7	2,930	5.5	<12.0	<4.4
	25-Feb-11	<1	<1	<5.0	<0.0150	<0.00020	7.3	513	<0.10	<12.0	<2.3
	17-May-11	<1	<1	<5.0	<0.0150	<0.00020	7.8	1,910	5.2	<12.0	<5.1
	18-Aug-11	<1	<1	<5.0	<0.0150	<0.00020	7.3	714	<0.50	<12.0	<4.0
	17-Nov-11	<1	<1	<5.0	<0.0150	<0.00020	7.6	2,500	1.0	<12.0	<8.4

Table 2. Surface Water Runoff Monitoring Data Summary
Closure Monitoring
Sunoco, Inc (R&M)
Point Breeze Processing Area Land Treatment Unit

Aquaterra Technologies, Inc.

Outfall Location	Date	Benzene (µg/L)	Toluene (µg/L)	Oil & Grease (mg/L)	Total Chromium (mg/L)	Total Mercury (mg/L)	pH	Specific Conductance (µmhos/cm)	Total Nitrate/ Nitrite Nitrogen (mg/L)	Total Suspended Solids (mg/L)	Biochemical Oxygen Demand (mg/L)
G/H	16-Nov-06	NS-dry	NS-dry	NS-dry	NS-dry	NS-dry	NS-dry	NS-dry	NS-dry	NS-dry	NS-dry
	16-Mar-07	<1.0	<1.0	<5.0	<0.0050	<0.00020	7.61	700	1.4	20	NA
	4-Jun-07	DRY	DRY	DRY	DRY	DRY	DRY	DRY	DRY	DRY	DRY
	27-Sep-07	DRY	DRY	DRY	DRY	DRY	DRY	DRY	DRY	DRY	DRY
	18-Dec-07	DRY	DRY	DRY	DRY	DRY	DRY	DRY	DRY	DRY	DRY
	7-Feb-08	DRY	DRY	DRY	DRY	DRY	DRY	DRY	DRY	DRY	DRY
	20-Mar-08	DRY	DRY	DRY	DRY	DRY	DRY	DRY	DRY	DRY	DRY
	9-May-08	DRY	DRY	DRY	DRY	DRY	DRY	DRY	DRY	DRY	DRY
	26-Sep-08	DRY	DRY	DRY	DRY	DRY	DRY	DRY	DRY	DRY	DRY
	25-Nov-08	DRY	DRY	DRY	DRY	DRY	DRY	DRY	DRY	DRY	DRY
	26-Mar-09	DRY	DRY	DRY	DRY	DRY	DRY	DRY	DRY	DRY	DRY
	15-May-09	DRY	DRY	DRY	DRY	DRY	DRY	DRY	DRY	DRY	DRY
	24-Sep-09	DRY	DRY	DRY	DRY	DRY	DRY	DRY	DRY	DRY	DRY
	3-Dec-09	DRY	DRY	DRY	DRY	DRY	DRY	DRY	DRY	DRY	DRY
	23-Feb-10	DRY	DRY	DRY	DRY	DRY	DRY	DRY	DRY	DRY	DRY
	28-May-10	DRY	DRY	DRY	DRY	DRY	DRY	DRY	DRY	DRY	DRY
	17-Sep-10	DRY	DRY	DRY	DRY	DRY	DRY	DRY	DRY	DRY	DRY
	17-Nov-10	DRY	DRY	DRY	DRY	DRY	DRY	DRY	DRY	DRY	DRY
	25-Feb-11	DRY	DRY	DRY	DRY	DRY	DRY	DRY	DRY	DRY	DRY
	17-May-11	DRY	DRY	DRY	DRY	DRY	DRY	DRY	DRY	DRY	DRY
	18-Aug-11	DRY	DRY	DRY	DRY	DRY	DRY	DRY	DRY	DRY	DRY
	17-Nov-11	DRY	DRY	DRY	DRY	DRY	DRY	DRY	DRY	DRY	DRY
Water Quality Criteria:		ND	ND	11	0.24	0.002	6.0-9.0	1,000,000	5	30	40
Detection Limits:		5	5	0.2	<0.01	<0.005	-	-	-	-	-

NS-I = Not sampled, inaccessible
NS-dry = Not sampled, dry
Water Quality Criteria and Detection Limits are established by the Sunoco, Inc (R&M) Ammended Closure Plan (original date November 1988, ammended November 2002 and May 2004), in Tables CP-2 and CP-3, respectively.
Post Closure Requirements include: Oil&Grease, pH, Specific Conductance, Chromium, Mercury, Benzene and Toluene.
Bolded values are outside the established Water Quality Criteria.
*Reporting Limit was increased due to insufficient sample volume.
If LOQ (limit of quantitation) for benzene and toluene is greater than one, it is typically due to sample foaming. If the dilution factor is greater than 20, the data is generally reported to the method detection limit (MDL).

Table 1. Historical Groundwater Monitoring Data Summary
Post-Closure Monitoring
Sunoco, Inc (R&M)
Point Breeze Processing Area Land Treatment Unit

Aquaterra Technologies, Inc.

Well ID	Date	Casing Elevation (feet)	Depth to Product (feet)	Depth to Water (feet)	Product Thickness (feet)	Product Adjusted Groundwater Elevation (feet)	Benzene (µg/L)	Toluene (µg/L)	Oil & Grease (mg/L)	Total Chromium (mg/L)	Total Mercury (mg/L)	pH	Specific Conductance (umhos/cm)
MW-4	27-Mar-06	25.20	NP	16.48	0.00	8.72	<1.0	<5.0	<5.3	<0.0050	<0.00020	6.75	1,700
(N-69)	13-Jun-06	25.20	NP	15.55	0.00	9.65	<1.0	<5.0	<5.0	<0.0050	<0.00020	6.42	1,700
	21-Aug-06	25.20	NP	15.41	0.00	9.79	<1.0	<5.0	<5.2	<0.0050	<0.00020	6.9	1,700
	12-Dec-06	25.20	NP	14.77	0.00	10.43	<1.0	<1.0	5.0	<0.0050	<0.00020	6.92	2,000
	9-Mar-07	25.20	NP	15.85	0.00	9.35	<1.0	<1.0	<5.0	<0.0050	<0.00020	7.07	1,600
	20-Jun-07	25.20	NP	14.61	0.00	10.59	<1.0	<1.0	<5.0	<0.0150	<0.00020	7.2	1,560
	21-Sep-07	25.20	NP	15.62	0.00	9.58	<1	<1	<5.0	<0.0150	<0.00020	7.0	1,640
	18-Dec-07	25.20	NP	16.20	0.00	9.00	<1	<1	<5.0	<0.0150	<0.00020	6.8	1,650
	6-Feb-08	25.20	NP	16.02	0.00	9.18	ND (0.5)	ND (0.5)	<5.0	<0.0020	<0.00020	7.1	1,690
	4-Jun-08	25.20	NP	15.25	0.00	9.95	<1	<1	<5.0	<0.0150	<0.00020	7	1,680
	29-Aug-08	25.20	NP	15.78	0.00	9.42	<1	<1	<5.0	<0.0150	<0.00020	7.1	1,540
	25-Nov-08	25.20	NP	15.70	0.00	9.50	<1	<1	<5.0	<0.0150	<0.00020	6.9	1,470
	11-Mar-09	25.20	NP	15.64	0.00	9.56	<1	<1	<5.0	<0.0150	<0.00020	7.1	1,550
	20-May-09	25.20	NP	15.14	0.00	10.06	<1	<1	<5.0	<0.0150	<0.00020	7.1	1,530
	24-Sep-09	25.20	NP	14.06	0.00	11.14	54	3	<5.0	<0.0150	<0.00020	7.3	1,560
	7-Dec-09	25.20	NP	14.72	0.00	10.48	<1	<1	<5.0	<0.0150	<0.00020	7.6	1,490
	23-Feb-10	25.20	NP	14.82	0.00	10.38	<1	<1	<5.0	<0.0150	<0.00020	8.1	1,440
	2-Jun-10	25.20	NP	14.69	0.00	10.51	<1	<1	<5.0	<0.0150	<0.00020	7.6	1,540
	8-Sep-10	25.20	NP	15.29	0.00	9.91	<1	<1	<5.0	<0.0150	<0.00020	7.5	1,440
	9-Nov-10	25.20	NP	15.34	0.00	9.86	<1	<1	<5.0	<0.0150	<0.00020	7.4	1,570
	14-Mar-11	25.20	NP	15.60	0.00	9.60	<1	<1	<5.0	<0.0150	<0.00020	7.0	1,680
	17-May-11	25.20	NP	15.14	0.00	10.06	<1	<1	<5.0	<0.0150	<0.00020	7.2	1,730
	28-Sep-11	25.20	NP	13.06	0.00	12.14	<1	<1	<5.0	<0.0150	<0.00020	6.9	1,730
	20-Oct-11	25.20	NP	13.97	0.00	11.23	<1	<1	<5.0	<0.0150	<0.00020	7.2	1,580
MW-5	27-Mar-06	24.20	NP	15.66	0.00	8.54	<1.0	<5.0	<5.3	<0.0050	<0.00020	7.03	1,200
(N-70)	13-Jun-06	24.20	NP	15.03	0.00	9.17	<1.0	<5.0	<5.0	<0.0050	<0.00020	6.44	1,300
	21-Aug-06	24.20	NP	14.97	0.00	9.23	<1.0	<5.0	<5.3	<0.0050	<0.00020	7.31	920
	12-Dec-06	24.20	NP	14.40	0.00	9.80	<1.0	<1.0	<5.0	<0.0050	<0.00020	7.18	1,100
	9-Mar-07	24.20	NP	15.36	0.00	8.84	<1.0	<1.0	<5.0	<0.0050	<0.00020	7.13	1,300
	20-Jun-07	24.20	NP	14.37	0.00	9.83	<1.0	<1.0	<5.0	<0.0150	<0.00020	7.0	1,050
	21-Sep-07	24.20	NP	15.21	0.00	8.99	<1	<1	<5.0	<0.0150	<0.00020	6.9	1,220
	18-Dec-07	24.20	NP	15.70	0.00	8.50	<1	<1	<5.0	<0.0150	<0.00020	7.0	1,100
	8-Feb-08	24.20	NP	15.55	0.00	8.65	ND (0.5)	ND (0.5)	<5.0	<0.0020	<0.00020	7.1	1,180
	4-Jun-08	24.20	NP	13.83	0.00	10.37	<1	<1	<5.0	<0.0150	<0.00020	7	1,140
	29-Aug-08	24.20	NP	15.23	0.00	8.97	<1	<1	<5.0	<0.0150	<0.00020	6.8	1,330
	25-Nov-08	24.20	NP	15.11	0.00	9.09	<1	<1	<5.0	<0.0150	<0.00020	6.9	1,080
	11-Mar-09	24.20	NP	15.18	0.00	9.02	<1	<1	<5.0	<0.0150	<0.00020	7.1	1,190
	20-May-09	24.20	NP	14.65	0.00	9.55	<1	<1	<5.0	<0.0150	<0.00020	7.1	1,060
	24-Sep-09	24.20	NP	13.73	0.00	10.47	12	1	<5.0	<0.0150	<0.00020	7.4	988
	7-Dec-09	24.20	NP	14.28	0.00	9.92	<1	<1	<5.0	<0.0150	<0.00020	7.5	863
	23-Feb-10	24.20	NP	14.47	0.00	9.73	<1	<1	<5.0	<0.0150	<0.00020	7.6	1,030
	2-Jun-10	24.20	NP	14.52	0.00	9.68	<1	<1	<5.0	<0.0150	<0.00020	7.1	1,250
	8-Sep-10	24.20	NP	14.86	0.00	9.34	<1	<1	<5.0	<0.0150	<0.00020	7.1	1,010
	9-Nov-10	24.20	NP	14.87	0.00	9.33	<1	<1	<5.0	<0.0150	<0.00020	7.2	1,070
	14-Mar-11	24.20	NP	15.01	0.00	9.19	<1	<1	<5.0	<0.0150	<0.00020	7.1	1,230
	17-May-11	24.20	NP	14.67	0.00	9.53	<1	<1	<5.0	<0.0150	<0.00020	7.1	1,270
	28-Sep-11	24.20	NP	12.81	0.00	11.39	<1	<1	<5.0	<0.0150	<0.00020	6.7	1,470
	20-Oct-11	24.20	NP	13.77	0.00	10.43	<1	<1	<5.0	<0.0150	<0.00020	6.9	1,390

Table 1. Historical Groundwater Monitoring Data Summary
Post-Closure Monitoring
Sunoco, Inc (R&M)
Point Breeze Processing Area Land Treatment Unit

Aquaterra Technologies, Inc.

Well ID	Date	Casing Elevation (feet)	Depth to Product (feet)	Depth to Water (feet)	Product Thickness (feet)	Product Adjusted Groundwater Elevation (feet)	Benzene (µg/L)	Toluene (µg/L)	Oil & Grease (mg/L)	Total Chromium (mg/L)	Total Mercury (mg/L)	pH	Specific Conductance (umhos/cm)
MW-6 (RW-300)	27-Mar-06	23.84	15.59	15.66	0.07	8.30	35	<5.0	37	<0.0050	<0.00020	9.43	6,900
	13-Jun-06	23.84	17.01	18.28	1.27	7.78	9.3	6.5	12	<0.0050	<0.00020	6.28	1,700
	21-Aug-06	23.84	17.19	18.31	1.12	7.49	9.8	7.4	<5.3	<0.0050	<0.00020	6.74	1,700
	12-Dec-06	23.84	14.69	17.55	2.86	11.30	NS-p	NS-p	NS-p	NS-p	NS-p	NS-p	NS-p
	9-Mar-07	23.84	14.87	15.51	0.64	8.81	NS-p	NS-p	NS-p	NS-p	NS-p	NS-p	NS-p
	20-Jun-07	23.84	17.44	17.79	0.35	6.62	NS-p	NS-p	NS-p	NS-p	NS-p	NS-p	NS-p
	21-Sep-07	23.84	8.02	8.07	0.05	15.86	NS-p	NS-p	NS-p	NS-p	NS-p	NS-p	NS-p
	18-Dec-07	23.84	18.13	18.31	0.18	5.85	NS-p	NS-p	NS-p	NS-p	NS-p	NS-p	NS-p
	6-Feb-08	23.84	18.21	18.29	0.08	5.69	NS-p	NS-p	NS-p	NS-p	NS-p	NS-p	NS-p
	4-Jun-08	23.84	NM	NM	NM	NM	NS-p	NS-p	NS-p	NS-p	NS-p	NS-p	NS-p
	29-Aug-08	23.84	15.94	16.95	1.01	8.66	NS-p	NS-p	NS-p	NS-p	NS-p	NS-p	NS-p
	25-Nov-08	23.84	14.4	15.24	0.84	10.07	NS-p	NS-p	NS-p	NS-p	NS-p	NS-p	NS-p
	11-Mar-09	23.84	15.03	15.70	0.67	9.31	NS-p	NS-p	NS-p	NS-p	NS-p	NS-p	NS-p
	20-May-09	23.84	14.11	14.11	0.00	9.73	NS-p	NS-p	NS-p	NS-p	NS-p	NS-p	NS-p
	24-Sep-09	23.84	13.90	14.45	0.55	9.94	NS-p	NS-p	NS-p	NS-p	NS-p	NS-p	NS-p
	7-Dec-09	23.84	13.58	13.72	0.14	10.37	NS-p	NS-p	NS-p	NS-p	NS-p	NS-p	NS-p
	23-Feb-10	23.84	13.46	13.75	0.29	10.60	NS-p	NS-p	NS-p	NS-p	NS-p	NS-p	NS-p
	2-Jun-10	23.84	14.30	14.82	0.52	9.93	NS-p	NS-p	NS-p	NS-p	NS-p	NS-p	NS-p
	8-Sep-10	23.84	15.04	15.53	0.49	9.17	NS-p	NS-p	NS-p	NS-p	NS-p	NS-p	NS-p
	17-Nov-10	23.84	14.55	14.98	0.43	9.61	NS-p	NS-p	NS-p	NS-p	NS-p	NS-p	NS-p
	14-Mar-11	23.84	14.43	14.84	0.41	9.72	NS-p	NS-p	NS-p	NS-p	NS-p	NS-p	NS-p
	17-May-11	23.84	14.08	14.10	0.02	9.78	NS-p	NS-p	NS-p	NS-p	NS-p	NS-p	NS-p
	28-Sep-11	23.84	12.25	12.66	0.41	11.90	NS-p	NS-p	NS-p	NS-p	NS-p	NS-p	NS-p
	20-Oct-11	23.84	13.68	14.06	0.40	10.48	NS-p	NS-p	NS-p	NS-p	NS-p	NS-p	NS-p
N-5	27-Mar-06	27.56	NP	9.92	0.00	17.64	NS-g	NS-g	NS-g	NS-g	NS-g	NS-g	NS-g
	13-Jun-06	27.56	NP	9.02	0.00	18.54	NS-g	NS-g	NS-g	NS-g	NS-g	NS-g	NS-g
	21-Aug-06	27.56	NP	9.53	0.00	18.03	NS-g	NS-g	NS-g	NS-g	NS-g	NS-g	NS-g
	12-Dec-06	27.56	NP	9.35	0.00	18.21	NS-p	NS-p	NS-p	NS-p	NS-p	NS-p	NS-p
	9-Mar-07	27.56	NP	9.17	0.00	18.39	NS-g	NS-g	NS-g	NS-g	NS-g	NS-g	NS-g
	20-Jun-07	27.56	NP	9.30	0.00	18.26	NS-g	NS-g	NS-g	NS-g	NS-g	NS-g	NS-g
	21-Sep-07	27.56	NP	10.50	0.00	17.06	NS-g	NS-g	NS-g	NS-g	NS-g	NS-g	NS-g
	18-Dec-07	27.56	NP	9.42	0.00	18.14	NS-g	NS-g	NS-g	NS-g	NS-g	NS-g	NS-g
	6-Feb-08	27.56	NP	8.96	0.00	18.60	ND (0.5)	ND (0.5)	NS-g	NS-g	NS-g	NS-g	NS-g
	4-Jun-08	27.56	NP	8.95	0.00	18.61	NS-g	NS-g	NS-g	NS-g	NS-g	NS-g	NS-g
	29-Aug-08	27.56	NP	9.46	0.00	18.10	NS-g	NS-g	NS-g	NS-g	NS-g	NS-g	NS-g
	25-Nov-08	27.56	NP	9.12	0.00	18.44	NS-g	NS-g	NS-g	NS-g	NS-g	NS-g	NS-g
	11-Mar-09	27.56	NP	9.75	0.00	17.81	NS-g	NS-g	NS-g	NS-g	NS-g	NS-g	NS-g
	20-May-09	27.56	NP	9.08	0.00	18.48	NS-g	NS-g	NS-g	NS-g	NS-g	NS-g	NS-g
	24-Sep-09	27.56	NP	9.04	0.00	18.52	NS-g	NS-g	NS-g	NS-g	NS-g	NS-g	NS-g
	7-Dec-09	27.56	NP	8.83	0.00	18.73	NS-g	NS-g	NS-g	NS-g	NS-g	NS-g	NS-g
	23-Feb-10	27.56	NP	8.32	0.00	19.24	NS-g	NS-g	NS-g	NS-g	NS-g	NS-g	NS-g
	2-Jun-10	27.56	NP	9.41	0.00	18.15	NS-g	NS-g	NS-g	NS-g	NS-g	NS-g	NS-g
	8-Sep-10	27.56	NP	9.98	0.00	17.58	NS-g	NS-g	NS-g	NS-g	NS-g	NS-g	NS-g
	9-Nov-10	27.56	NP	9.30	0.00	18.26	NS-g	NS-g	NS-g	NS-g	NS-g	NS-g	NS-g
	14-Mar-11	27.56	NP	8.26	0.00	19.30	NS-g	NS-g	NS-g	NS-g	NS-g	NS-g	NS-g
	17-May-11	27.56	NP	14.67	0.00	12.89	NS-g	NS-g	NS-g	NS-g	NS-g	NS-g	NS-g
	28-Sep-11	27.56	NP	8.43	0.00	19.13	NS-g	NS-g	NS-g	NS-g	NS-g	NS-g	NS-g
	20-Oct-11	27.56	NP	9.32	0.00	18.24	NS-g	NS-g	NS-g	NS-g	NS-g	NS-g	NS-g

Table 1. Historical Groundwater Monitoring Data Summary
Post-Closure Monitoring
Sunoco, Inc (R&M)
Point Breeze Processing Area Land Treatment Unit

Aquaterra Technologies, Inc.

Well ID	Date	Casing Elevation (feet)	Depth to Product (feet)	Depth to Water (feet)	Product Thickness (feet)	Product Adjusted Groundwater Elevation (feet)	Benzene (µg/L)	Toluene (µg/L)	Oil & Grease (mg/L)	Total Chromium (mg/L)	Total Mercury (mg/L)	pH	Specific Conductance (umhos/cm)
N-10	27-Mar-06	21.06	NP	4.19	0.00	16.87	NS-g	NS-g	NS-g	NS-g	NS-g	NS-g	NS-g
	13-Jun-08	21.06	NP	3.58	0.00	17.48	NS-g	NS-g	NS-g	NS-g	NS-g	NS-g	NS-g
	21-Aug-06	21.06	NP	5.78	0.00	15.28	NS-g	NS-g	NS-g	NS-g	NS-g	NS-g	NS-g
	12-Dec-06	21.06	NP	4.98	0.00	16.08	NS-g	NS-g	NS-g	NS-g	NS-g	NS-g	NS-g
	9-Mar-07	21.06	NP	5.04	0.00	16.02	NS-g	NS-g	NS-g	NS-g	NS-g	NS-g	NS-g
	20-Jun-07	21.06	NP	4.89	0.00	16.17	NS-g	NS-g	NS-g	NS-g	NS-g	NS-g	NS-g
	21-Sep-07	21.06	NP	6.52	0.00	14.54	NS-g	NS-g	NS-g	NS-g	NS-g	NS-g	NS-g
	18-Dec-07	21.06	NP	4.77	0.00	16.29	NS-g	NS-g	NS-g	NS-g	NS-g	NS-g	NS-g
	6-Feb-08	21.06	NP	4.41	0.00	16.65	ND (0.5)	ND (0.5)	NS-g	NS-g	NS-g	NS-g	NS-g
	4-Jun-08	21.06	NP	3.94	0.00	17.12	NS-g	NS-g	NS-g	NS-g	NS-g	NS-g	NS-g
	29-Aug-08	21.06	NP	5.98	0.00	15.08	NS-g	NS-g	NS-g	NS-g	NS-g	NS-g	NS-g
	25-Nov-08	21.06	NP	5.53	0.00	15.53	NS-g	NS-g	NS-g	NS-g	NS-g	NS-g	NS-g
	11-Mar-09	21.06	NP	5.73	0.00	15.33	NS-g	NS-g	NS-g	NS-g	NS-g	NS-g	NS-g
	20-May-09	21.06	NP	4.35	0.00	16.71	NS-g	NS-g	NS-g	NS-g	NS-g	NS-g	NS-g
	24-Sep-09	21.06	NP	4.45	0.00	16.61	NS-g	NS-g	NS-g	NS-g	NS-g	NS-g	NS-g
	7-Dec-09	21.06	NP	3.41	0.00	17.65	NS-g	NS-g	NS-g	NS-g	NS-g	NS-g	NS-g
	23-Feb-10	21.06	NP	2.34	0.00	18.72	NS-g	NS-g	NS-g	NS-g	NS-g	NS-g	NS-g
	2-Jun-10	21.06	NP	5.45	0.00	15.61	NS-g	NS-g	NS-g	NS-g	NS-g	NS-g	NS-g
	8-Sep-10	21.06	NP	5.87	0.00	15.19	NS-g	NS-g	NS-g	NS-g	NS-g	NS-g	NS-g
	9-Nov-10	21.06	NP	4.79	0.00	16.27	NS-g	NS-g	NS-g	NS-g	NS-g	NS-g	NS-g
	14-Mar-11	21.06	NP	2.90	0.00	18.18	NS-g	NS-g	NS-g	NS-g	NS-g	NS-g	NS-g
	17-May-11	21.06	NP	4.82	0.00	16.24	NS-g	NS-g	NS-g	NS-g	NS-g	NS-g	NS-g
	28-Sep-11	21.06	NP	2.47	0.00	18.59	NS-g	NS-g	NS-g	NS-g	NS-g	NS-g	NS-g
	20-Oct-11	21.06	NP	4.04	0.00	17.02	NS-g	NS-g	NS-g	NS-g	NS-g	NS-g	NS-g
N-11	27-Mar-06	30.48	NP	18.82	0.00	11.66	6.5	8.2	<5.3	0.22	0.00045	6.75	1,100
	13-Jun-06	30.48	NP	18.28	0.00	12.20	8.1	9.7	<5.1	0.20	0.0003	6.4	930
	21-Aug-06	30.48	NP	19.78	0.00	10.70	7.4	<10	8.0	0.07	<0.00020	6.82	1,000
	12-Dec-06	30.48	NP	18.47	0.00	12.01	7.8	12	13.0	0.09	<0.00020	6.81	1,400
	9-Mar-07	30.48	NP	18.53	0.00	11.95	7.6	12	7.2	0.13	<0.00020	6.94	1,000
	20-Jun-07	30.48	NP	18.38	0.00	12.10	7	11	<5.0	0.11	<0.00020	6.8	1,190
	21-Sep-07	30.48	NP	19.15	0.00	11.33	8	11	9.4	0.02	<0.00020	6.8	1,410
	18-Dec-07	30.48	NP	18.74	0.00	11.74	7	12	5.2	0.0170	<0.00020	6.8	1,210
	6-Feb-08	30.48	NP	18.55	0.00	11.93	10	11	<5.0	0.1470	<0.00020	6.8	1,040
	4-Jun-08	30.48	NP	18.48	0.00	12.00	8	12	<5.0	0.0539	<0.00020	6.8	916
	29-Aug-08	30.48	NP	19.04	0.00	11.44	5	8	<5.0	0.4760	<0.0010	6.8	826
	25-Nov-08	30.48	NP	18.91	0.00	11.57	<20	<20	6.2	0.0548	<0.0010	6.8	814
	11-Mar-09	30.48	NP	18.98	0.00	11.50	<5	7	<5.0	0.0362	<0.0020	6.9	860
	20-May-09	30.48	NP	18.22	0.00	12.26	5	8	<5.0	0.0625	<0.0020	6.7	937
	24-Sep-09	30.48	NP	18.20	0.00	12.28	48	9	<5.0	<0.0150	<0.0020	6.9	1,120
	7-Dec-09	30.48	NP	18.37	0.00	12.11	4	6	<5.0	0.1090	<0.0020	6.7	1,540
	23-Feb-10	30.48	NP	17.69	0.00	12.79	4	8	<5.0	0.0894	<0.0020	7.13	1,910
	2-Jun-10	30.48	NP	18.57	0.00	11.91	4	7	<5.0	0.0960	<0.0020	6.7	2,350
	8-Sep-10	30.48	NP	18.94	0.00	11.54	3	5	<5.0	0.0593	<0.0020	6.7	1,040
	9-Nov-10	30.48	NP	18.63	0.00	11.85	2	5	<5.0	0.299	<0.0020	6.8	840
	14-Mar-11	30.48	NP	17.51	0.00	12.97	3	6	<5.0	0.0152	<0.0020	6.8	1,250
	17-May-11	30.48	NP	18.45	0.00	12.03	7	6	5.2	<0.0150	<0.0020	6.9	1,710
	28-Sep-11	30.48	NP	17.06	0.00	13.42	<10	<10	<5.0	<0.0150	<0.00020	6.7	662
	20-Oct-11	30.48	NP	18.02	0.00	12.46	5	5	<5.0	0.1390	<0.00020	6.9	806

Table 1. Historical Groundwater Monitoring Data Summary
Post-Closure Monitoring
Sunoco, Inc (R&M)
Point Breeze Processing Area Land Treatment Unit

Aquaterra Technologies, Inc.

Well ID	Date	Casing Elevation (feet)	Depth to Product (feet)	Depth to Water (feet)	Product Thickness (feet)	Product Adjusted Groundwater Elevation (feet)	Benzene (µg/L)	Toluene (µg/L)	Oil & Grease (mg/L)	Total Chromium (mg/L)	Total Mercury (mg/L)	pH	Specific Conductance (umhos/cm)
N-24	27-Mar-06	21.17	NP	12.56	0.00	8.61	NS-g	NS-g	NS-g	NS-g	NS-g	NS-g	NS-g
	13-Jun-06	21.17	NP	11.12	0.00	10.05	NS-g	NS-g	NS-g	NS-g	NS-g	NS-g	NS-g
	21-Aug-06	21.17	NP	12.37	0.00	8.80	NS-g	NS-g	NS-g	NS-g	NS-g	NS-g	NS-g
	12-Dec-06	21.17	NP	12.34	0.00	8.83	NS-g	NS-g	NS-g	NS-g	NS-g	NS-g	NS-g
	9-Mar-07	21.17	NP	12.06	0.00	9.11	NS-g	NS-g	NS-g	NS-g	NS-g	NS-g	NS-g
	20-Jun-07	21.17	NP	12.1	0.00	9.07	NS-g	NS-g	NS-g	NS-g	NS-g	NS-g	NS-g
	21-Sep-07	21.17	NP	12.42	0.00	8.75	NS-g	NS-g	NS-g	NS-g	NS-g	NS-g	NS-g
	18-Dec-07	21.17	NP	12.31	0.00	8.86	NS-g	NS-g	NS-g	NS-g	NS-g	NS-g	NS-g
	7-Feb-08	21.17	NP	12.02	0.00	9.15	0.08	ND (0.5)	NS-g	NS-g	NS-g	NS-g	NS-g
	4-Jun-08	21.17	NP	11.89	0.00	9.28	NS-g	NS-g	NS-g	NS-g	NS-g	NS-g	NS-g
	29-Aug-08	21.17	NP	12.33	0.00	8.84	NS-g	NS-g	NS-g	NS-g	NS-g	NS-g	NS-g
	25-Nov-08	21.17	NP	12.11	0.00	9.06	NS-g	NS-g	NS-g	NS-g	NS-g	NS-g	NS-g
	11-Mar-09	21.17	NP	12.22	0.00	8.95	NS-g	NS-g	NS-g	NS-g	NS-g	NS-g	NS-g
	20-May-09	21.17	NP	11.83	0.00	9.34	NS-g	NS-g	NS-g	NS-g	NS-g	NS-g	NS-g
	24-Sep-09	21.17	NP	12.22	0.00	8.95	NS-g	NS-g	NS-g	NS-g	NS-g	NS-g	NS-g
	7-Dec-09	21.17	NP	12.18	0.00	8.99	NS-g	NS-g	NS-g	NS-g	NS-g	NS-g	NS-g
	23-Feb-10	21.17	NP	10.63	0.00	10.54	NS-g	NS-g	NS-g	NS-g	NS-g	NS-g	NS-g
	2-Jun-10	21.17	NP	12.42	0.00	8.75	NS-g	NS-g	NS-g	NS-g	NS-g	NS-g	NS-g
	8-Sep-10	21.17	NP	12.26	0.00	8.91	NS-g	NS-g	NS-g	NS-g	NS-g	NS-g	NS-g
	9-Nov-10	21.17	NP	11.74	0.00	9.43	NS-g	NS-g	NS-g	NS-g	NS-g	NS-g	NS-g
	14-Mar-11	21.17	NP	10.88	0.00	10.29	NS-g	NS-g	NS-g	NS-g	NS-g	NS-g	NS-g
	17-May-11	21.17	NP	11.01	0.00	10.16	NS-g	NS-g	NS-g	NS-g	NS-g	NS-g	NS-g
	28-Sep-11	21.17	NP	10.81	0.00	10.36	NS-g	NS-g	NS-g	NS-g	NS-g	NS-g	NS-g
	20-Oct-11	21.17	NP	12.17	0.00	9.00	NS-g	NS-g	NS-g	NS-g	NS-g	NS-g	NS-g
N-77	27-Mar-06	20.74	NP	8.72	0.00	12.02	NS-g	NS-g	NS-g	NS-g	NS-g	NS-g	NS-g
	13-Jun-06	20.74	NP	6.25	0.00	14.49	NS-g	NS-g	NS-g	NS-g	NS-g	NS-g	NS-g
	21-Aug-06	20.74	NP	8.25	0.00	12.49	NS-g	NS-g	NS-g	NS-g	NS-g	NS-g	NS-g
	12-Dec-06	20.74	NP	7.89	0.00	12.85	NS-g	NS-g	NS-g	NS-g	NS-g	NS-g	NS-g
	9-Mar-07	20.74	NP	6.82	0.00	13.92	NS-g	NS-g	NS-g	NS-g	NS-g	NS-g	NS-g
	20-Jun-07	20.74	NP	7.74	0.00	13.00	NS-g	NS-g	NS-g	NS-g	NS-g	NS-g	NS-g
	21-Sep-07	20.74	NP	8.79	0.00	11.95	NS-g	NS-g	NS-g	NS-g	NS-g	NS-g	NS-g
	18-Dec-07	20.74	NP	7.32	0.00	13.42	NS-g	NS-g	NS-g	NS-g	NS-g	NS-g	NS-g
	7-Feb-08	20.74	NP	6.83	0.00	13.91	ND (0.5)	ND (0.5)	NS-g	NS-g	NS-g	NS-g	NS-g
	4-Jun-08	20.74	NP	NM	0.00	NM	NS-g	NS-g	NS-g	NS-g	NS-g	NS-g	NS-g
	29-Aug-08	20.74	NP	8.03	0.00	12.71	NS-g	NS-g	NS-g	NS-g	NS-g	NS-g	NS-g
	25-Nov-08	20.74	NP	7.12	0.00	13.62	NS-g	NS-g	NS-g	NS-g	NS-g	NS-g	NS-g
	11-Mar-09	20.74	NP	7.96	0.00	12.78	NS-g	NS-g	NS-g	NS-g	NS-g	NS-g	NS-g
	20-May-09	20.74	NP	6.52	0.00	14.22	NS-g	NS-g	NS-g	NS-g	NS-g	NS-g	NS-g
	24-Sep-09	20.74	NP	7.53	0.00	13.21	NS-g	NS-g	NS-g	NS-g	NS-g	NS-g	NS-g
	7-Dec-09	20.74	NP	NM	0.00	NM	NS-g	NS-g	NS-g	NS-g	NS-g	NS-g	NS-g
	23-Feb-10	20.74	NP	NM	0.00	NM	NS-g	NS-g	NS-g	NS-g	NS-g	NS-g	NS-g
	2-Jun-10	20.74	NP	8.36	0.00	12.38	NS-g	NS-g	NS-g	NS-g	NS-g	NS-g	NS-g
	8-Sep-10	20.74	NP	8.11	0.00	12.63	NS-g	NS-g	NS-g	NS-g	NS-g	NS-g	NS-g
	9-Nov-10	20.74	NP	6.50	0.00	14.24	NS-g	NS-g	NS-g	NS-g	NS-g	NS-g	NS-g
	14-Mar-11	20.47	NP	5.35	0.00	15.12	NS-g	NS-g	NS-g	NS-g	NS-g	NS-g	NS-g
	17-May-11	20.47	NP	8.05	0.00	12.42	NS-g	NS-g	NS-g	NS-g	NS-g	NS-g	NS-g
	28-Sep-11	20.47	NP	5.25	0.00	15.22	NS-g	NS-g	NS-g	NS-g	NS-g	NS-g	NS-g
	20-Oct-11	20.47	NP	7.93	0.00	12.54	NS-g	NS-g	NS-g	NS-g	NS-g	NS-g	NS-g

Table 1. Historical Groundwater Monitoring Data Summary
Post-Closure Monitoring
Sunoco, Inc (R&M)
Point Breeze Processing Area Land Treatment Unit

Aquaterra Technologies, Inc.

Well ID	Date	Casing Elevation (feet)	Depth to Product (feet)	Depth to Water (feet)	Product Thickness (feet)	Product Adjusted Groundwater Elevation (feet)	Benzene (µg/L)	Toluene (µg/L)	Oil & Grease (mg/L)	Total Chromium (mg/L)	Total Mercury (mg/L)	pH	Specific Conductance (umhos/cm)
N-83	27-Mar-06	23.73	NP	15.98	0.00	7.75	NS-g	NS-g	NS-g	NS-g	NS-g	NS-g	NS-g
	13-Jun-06	23.73	NP	15.37	0.00	8.36	NS-g	NS-g	NS-g	NS-g	NS-g	NS-g	NS-g
	21-Aug-06	23.73	NP	17.39	0.00	6.34	NS-g	NS-g	NS-g	NS-g	NS-g	NS-g	NS-g
	12-Dec-06	23.73	NP	6.30	0.00	17.43	NS-g	NS-g	NS-g	NS-g	NS-g	NS-g	NS-g
	9-Mar-07	23.73	NP	5.70	0.00	18.03	NS-g	NS-g	NS-g	NS-g	NS-g	NS-g	NS-g
	20-Jun-07	23.73	NP	5.78	0.00	17.95	NS-g	NS-g	NS-g	NS-g	NS-g	NS-g	NS-g
	21-Sep-07	23.73	NP	6.45	0.00	17.28	NS-g	NS-g	NS-g	NS-g	NS-g	NS-g	NS-g
	18-Dec-07	23.73	NP	5.19	0.00	18.54	NS-g	NS-g	NS-g	NS-g	NS-g	NS-g	NS-g
	6-Feb-08	23.73	NP	15.12	0.00	8.61	ND (0.5)	ND (0.5)	NS-g	NS-g	NS-g	NS-g	NS-g
	4-Jun-08	23.73	NP	5.47	0.00	18.26	NS-g	NS-g	NS-g	NS-g	NS-g	NS-g	NS-g
	29-Aug-08	23.73	NP	6.43	0.00	17.30	NS-g	NS-g	NS-g	NS-g	NS-g	NS-g	NS-g
	25-Nov-08	23.73	NP	15.56	0.00	8.17	NS-g	NS-g	NS-g	NS-g	NS-g	NS-g	NS-g
	11-Mar-09	23.73	NP	15.69	0.00	8.04	NS-g	NS-g	NS-g	NS-g	NS-g	NS-g	NS-g
	20-May-09	23.73	NP	15.31	0.00	8.42	NS-g	NS-g	NS-g	NS-g	NS-g	NS-g	NS-g
	24-Sep-09	23.73	NP	14.61	0.00	9.12	NS-g	NS-g	NS-g	NS-g	NS-g	NS-g	NS-g
	7-Dec-09	23.73	NP	14.79	0.00	8.94	NS-g	NS-g	NS-g	NS-g	NS-g	NS-g	NS-g
	23-Feb-10	23.73	NP	15.18	0.00	8.55	NS-g	NS-g	NS-g	NS-g	NS-g	NS-g	NS-g
	2-Jun-10	23.73	NP	15.25	0.00	8.48	NS-g	NS-g	NS-g	NS-g	NS-g	NS-g	NS-g
	8-Sep-10	23.73	NP	15.47	0.00	8.26	NS-g	NS-g	NS-g	NS-g	NS-g	NS-g	NS-g
	9-Nov-10	23.73	NP	15.44	0.00	8.29	NS-g	NS-g	NS-g	NS-g	NS-g	NS-g	NS-g
	14-Mar-11	23.73	NP	15.24	0.00	8.49	NS-g	NS-g	NS-g	NS-g	NS-g	NS-g	NS-g
	17-May-11	23.73	NP	15.22	0.00	8.51	NS-g	NS-g	NS-g	NS-g	NS-g	NS-g	NS-g
	28-Sep-11	23.73	NP	13.77	0.00	9.96	NS-g	NS-g	NS-g	NS-g	NS-g	NS-g	NS-g
	20-Oct-11	23.73	NP	14.64	0.00	9.09	NS-g	NS-g	NS-g	NS-g	NS-g	NS-g	NS-g
N-89	27-Mar-06	27.14	14.16	14.17	0.01	12.99	NS-g	NS-g	NS-g	NS-g	NS-g	NS-g	NS-g
	13-Jun-06	27.14	NM-I	NM-I	NM-I	NM-I	NG-I	NG-I	NG-I	NG-I	NG-I	NG-I	NG-I
	21-Aug-06	27.14	14.19	14.20	0.01	12.96	NS-g	NS-g	NS-g	NS-g	NS-g	NS-g	NS-g
	12-Dec-06	27.14	13.76	13.81	0.05	13.42	NS-g	NS-g	NS-g	NS-g	NS-g	NS-g	NS-g
	9-Mar-07	27.14	NM	NM	NM	NM	NS-g	NS-g	NS-g	NS-g	NS-g	NS-g	NS-g
	20-Jun-07	27.14	13.62	13.68	0.02	13.54	NS-g	NS-g	NS-g	NS-g	NS-g	NS-g	NS-g
	21-Sep-07	27.14	14.34	14.38	0.04	12.83	NS-g	NS-g	NS-g	NS-g	NS-g	NS-g	NS-g
	18-Dec-07	27.14	NP	14.47	0.00	12.67	NS-g	NS-g	NS-g	NS-g	NS-g	NS-g	NS-g
	6-Feb-08	27.14	NP	NM	NM	NM	NS-g	NS-g	NS-g	NS-g	NS-g	NS-g	NS-g
	4-Jun-08	27.14	NP	14.00	0.00	13.14	NS-g	NS-g	NS-g	NS-g	NS-g	NS-g	NS-g
	29-Aug-08	27.14	NP	14.18	0.00	12.96	NS-g	NS-g	NS-g	NS-g	NS-g	NS-g	NS-g
	25-Nov-08	27.14	NP	14.33	0.00	12.81	NS-g	NS-g	NS-g	NS-g	NS-g	NS-g	NS-g
	11-Mar-09	27.14	NP	14.29	0.00	12.85	NS-g	NS-g	NS-g	NS-g	NS-g	NS-g	NS-g
	20-May-09	27.14	NP	14.04	0.00	13.1	NS-g	NS-g	NS-g	NS-g	NS-g	NS-g	NS-g
	24-Sep-09	27.14	NP	NM	NM	NM	NS-g	NS-g	NS-g	NS-g	NS-g	NS-g	NS-g
	7-Dec-09	27.14	NP	damaged	NM	NM	NS-g	NS-g	NS-g	NS-g	NS-g	NS-g	NS-g
	23-Feb-10	27.14	NP	damaged	NM	NM	NS-g	NS-g	NS-g	NS-g	NS-g	NS-g	NS-g
	2-Jun-10	27.14	NP	damaged	NM	NM	NS-g	NS-g	NS-g	NS-g	NS-g	NS-g	NS-g
	8-Sep-10	27.14	NP	damaged	NM	NM	NS-g	NS-g	NS-g	NS-g	NS-g	NS-g	NS-g
	9-Nov-10	27.14	NP	damaged	NM	NM	NS-g	NS-g	NS-g	NS-g	NS-g	NS-g	NS-g
	14-Mar-11	27.14	NP	damaged	NM	NM	NS-g	NS-g	NS-g	NS-g	NS-g	NS-g	NS-g
	17-May-11	27.14	NP	damaged	NM	NM	NS-g	NS-g	NS-g	NS-g	NS-g	NS-g	NS-g
	28-Sep-11	27.14	NP	damaged	NM	NM	NS-g	NS-g	NS-g	NS-g	NS-g	NS-g	NS-g
	20-Oct-11	27.14	NP	damaged	NM	NM	NS-g	NS-g	NS-g	NS-g	NS-g	NS-g	NS-g

NS-g = Not Sampled, gauge only
NP = No Product
NM-I = Not Measured, inaccessible
NG-I = Not Gauged, inaccessible
NS-p = Not Sampled due to presence of product
Oil & Grease sample from MW-4 was resampled on 1-2-07 due to broken bottle ware during the original sampling event.
Liquid levels collected on 12 December 2006 and samples collected 13 December 2006.
1st Quarter 2008 samples collected on 6-Feb-08 for benzene and toluene, and on 23-Apr-08 for other compounds.
Bold values exceed the PADEP Statewide Health Standard MSCs.
N-89 - blockage in well at approximately 4' below casing.

Table 2. Surface Water Runoff Monitoring Data Summary
Closure Monitoring
Sunoco, Inc (R&M)
Point Breeze Processing Area Land Treatment Unit

Aquaterra Technologies, Inc.

Outfall Location	Date	Benzene (µg/L)	Toluene (µg/L)	Oil & Grease (mg/L)	Total Chromium (mg/L)	Total Mercury (mg/L)	pH	Specific Conductance (µmhos/cm)	Total Nitrate/ Nitrite Nitrogen (mg/L)	Total Suspended Solids (mg/L)	Biochemical Oxygen Demand (mg/L)
A	16-Nov-06	<500	<500	<5.0	**0.261**	0.00021	7.4	3,800	0.64	**918**	38.1
	16-Mar-07	<1.0	<1.0	**26**	**0.64**	0.0013	7.75	600	**5.1**	**1,300**	NA
	4-Jun-07	**2.8**	<1.0	<5.0	**0.26**	<0.00020	7.46	2,120	**21**	**4,200**	**56**
	27-Sep-07	<5	<5	10.8	**0.161**	<0.00020	8	1,500	0.42	**7,700**	**61.5**
	18-Dec-07	<50	<50	**18.3**	**0.166**	<0.00020	7.3	2,760	**22.6**	**1,580**	**185**
	7-Feb-08	<20	<20	5.2	0.0889	0.000047	7.5	4,370	3.6	**640**	30.9
	20-Mar-08	**2**	<1	<5.0	<0.0150	<0.00020	7.2	1,670	2.7	*<30.0	<7.3
	9-May-08	<10	<10	<5.0	<0.0150	<0.00020	7.6	2,520	**16.7**	**131**	**49.2**
	26-Sep-08	<10	<10	<5.0	0.0453	<0.00020	8.3	1,780	0.80	**92**	7.7
	25-Nov-08	<1	<1	<5.0	<0.0150	<0.00020	7.8	1,140	0.94	<12.0	6.6
	26-Mar-09	<20	<20	7.6	0.0203	0.00023	7.3	4,980	**13.0**	12.4	16.2
	15-May-09	<10	<10	<5.0	<0.0150	<0.00020	7.4	2,710	**7.0**	<12.0	<4.1
	24-Sep-09	**3**	<1	<5.0	<0.0150	<0.00020	7.8	2,230	<0.50	<24.0	36.9
	3-Dec-09	<1	<1	<5.0	0.0322	<0.00020	7.4	1,080	NA	**51.3**	11.8
	23-Feb-10	<1	<1	<5.0	<0.0150	<0.00020	7.4	354	0.68	**71.2**	<1.9
	28-May-10	<10	<10	6.9	<0.0150	<0.00020	8.3	2,340	<1.0	**65.6**	**67.9**
	17-Sep-10	<1	<1	<5.0	<0.0150	<0.00020	8.0	1,370	<1.0	30.0	32.8
	17-Nov-10	<10	<10	<5.0	<0.0150	<0.00020	7.9	1,870	1.8	<12.0	<2.8
	25-Feb-11	<1	<1	<5.0	<0.0150	<0.00020	7.4	439	1.3	**54.0**	<3.7
	17-May-11	<5	<5	<5.0	<0.0150	<0.00020	7.9	2,340	**11.2**	<12.0	<8.9
	18-Aug-11	<1	<1	<5.0	<0.0150	<0.00020	7.5	458	1.3	<12.0	<5.6
	17-Nov-11	<1	<1	<5.0	<0.0150	<0.00020	7.7	2,330	<0.10	<12.0	15.8
B	16-Nov-06	NS-I	NS-I	NS-I	NS-I	NS-I	NS-I	NS-I	NS-I	NS-I	NS-I
	16-Mar-07	<1.0	<1.0	<5.0	0.025	<0.00020	7.67	480	3.7	**150**	NA
	4-Jun-07	DRY	DRY	DRY	DRY	DRY	DRY	DRY	DRY	DRY	DRY
	27-Sep-07	DRY	DRY	DRY	DRY	DRY	DRY	DRY	DRY	DRY	DRY
	18-Dec-07	DRY	DRY	DRY	DRY	DRY	DRY	DRY	DRY	DRY	DRY
	7-Feb-08	DRY	DRY	DRY	DRY	DRY	DRY	DRY	DRY	DRY	DRY
	20-Mar-08	**1**	<1	<5.0	<0.0150	<0.00020	7.4	494	<0.10	**355**	<7.0
	9-May-08	DRY	DRY	DRY	DRY	DRY	DRY	DRY	DRY	DRY	DRY
	26-Sep-08	DRY	DRY	DRY	DRY	DRY	DRY	DRY	DRY	DRY	DRY
	25-Nov-08	DRY	DRY	DRY	DRY	DRY	DRY	DRY	DRY	DRY	DRY
	26-Mar-09	DRY	DRY	DRY	DRY	DRY	DRY	DRY	DRY	DRY	DRY
	15-May-09	DRY	DRY	DRY	DRY	DRY	DRY	DRY	DRY	DRY	DRY
	24-Sep-09	DRY	DRY	DRY	DRY	DRY	DRY	DRY	DRY	DRY	DRY
	3-Dec-09	DRY	DRY	DRY	DRY	DRY	DRY	DRY	DRY	DRY	DRY
	23-Feb-10	DRY	DRY	DRY	DRY	DRY	DRY	DRY	DRY	DRY	DRY
	28-May-10	DRY	DRY	DRY	DRY	DRY	DRY	DRY	DRY	DRY	DRY
	17-Sep-10	DRY	DRY	DRY	DRY	DRY	DRY	DRY	DRY	DRY	DRY
	17-Nov-10	DRY	DRY	DRY	DRY	DRY	DRY	DRY	DRY	DRY	DRY
	25-Feb-11	DRY	DRY	DRY	DRY	DRY	DRY	DRY	DRY	DRY	DRY
	17-May-11	DRY	DRY	DRY	DRY	DRY	DRY	DRY	DRY	DRY	DRY
	18-Aug-11	DRY	DRY	DRY	DRY	DRY	DRY	DRY	DRY	DRY	DRY
	17-Nov-11	DRY	DRY	DRY	DRY	DRY	DRY	DRY	DRY	DRY	DRY

Table 2. Surface Water Runoff Monitoring Data Summary
Closure Monitoring
Sunoco, Inc (R&M)
Point Breeze Processing Area Land Treatment Unit

Aquaterra Technologies, Inc.

Outfall Location	Date	Benzene (µg/L)	Toluene (µg/L)	Oil & Grease (mg/L)	Total Chromium (mg/L)	Total Mercury (mg/L)	pH	Specific Conductance (µmhos/cm)	Total Nitrate/ Nitrite Nitrogen (mg/L)	Total Suspended Solids (mg/L)	Biochemical Oxygen Demand (mg/L)
C	16-Nov-06	<50	<50	9	0.472	0.0014	7.8	3,390	1.2	2,210	20.3
	16-Mar-07	<1.0	<1.0	11	5.30	0.0039	7.83	1,000	8.5	6,500	NA
	4-Jun-07	<1.0	<1.0	20	0.59	0.0011	7.62	3,120	21	5,100	17
	27-Sep-07	<5	<5	16.3	3.84	<0.0010	7.8	2,170	0.52	17,200	190
	18-Dec-07	<20	<20	9.9	0.891	0.0006	7.5	3,780	16.3	5,650	41.1
	7-Feb-08	<20	<20	17.6	0.0765	0.00025	7.8	4,010	14.7	605	54.3
	20-Mar-08	<1	<1	<5.0	<0.0150	<0.00020	7.7	3,380	4.0	*<120	<7.4
	9-May-08	<1	<1	<5.0	<0.0150	<0.00020	7.3	2,970	6.0	29.0	6.1
	26-Sep-08	<10	<10	6.7	0.0593	<0.00020	8.1	1,920	0.63	118	7.7
	25-Nov-08	<10	<10	5.4	<0.0150	<0.00020	7.9	3,260	6.7	<12.0	4.3
	26-Mar-09	<10	<10	<5.0	<0.0150	<0.0010	7.8	4,390	15.0	<12.0	<11.3
	15-May-09	<10	<10	<5.0	<0.0150	<0.00020	7.3	2,450	7.0	<12.0	8.6
	24-Sep-09	<1	<1	5.2	<0.0150	<0.00020	7.9	3,430	1.9	<12.0	<2.2
	3-Dec-09	<1	<1	<5.0	<0.0150	<0.00020	7.5	1,410	NA	17.2	8.5
	23-Feb-10	<1	<1	<5.0	<0.0150	<0.00020	7.73	246	0.19	27.6	<2.2
	28-May-10	<10	<10	10.5	<0.0150	<0.00020	7.4	3,230	<1.0	<30.0	416
	17-Sep-10	<1	<1	<5.0	<0.0150	<0.00020	8.1	2,080	<1.0	<12.0	21.1
	17-Nov-10	<10	<10	<5.0	<0.0150	<0.00020	7.8	3,350	<0.50	49.2	7.5
	25-Feb-11	<1	<1	<5.0	<0.0150	<0.00020	7.3	469	1.2	<12.0	<3.5
	17-May-11	<5	<5	<5.0	<0.0150	<0.00020	7.7	3,120	10.9	<12.0	<9.8
	18-Aug-11	<1	<1	<5.0	<0.0150	<0.00020	7.4	905	5.0	<12.0	<5.0
	17-Nov-11	<1	<1	<5.0	<0.0150	<0.00020	7.6	3,560	3.9	24.8	<5.7
D	16-Nov-06	<500	<500	6.6	0.580	0.00047	7.3	4,330	0.39	3,370	51.6
	16-Mar-07	<1.0	<1.0	<5.0	2.90	0.0061	7.75	640	12	3,300	NA
	4-Jun-07	<1.0	<1.0	8.1	0.69	0.00061	7.28	1,620	6.9	6,000	16
	27-Sep-07	<5	<5	7.2	0.25	<0.0020	8.1	2,490	0.77	843	16.2
	18-Dec-07	<100	<100	6.4	0.0493	<0.0020	7.4	4,550	6.3	360	47.2
	7-Feb-08	<20	<20	19.9	0.245	0.00099	7.4	4,750	6.1	1,260	51.0
	20-Mar-08	<1	<1	<5.0	0.0431	0.00026	7.7	2,250	1.6	*<75.0	<11.0
	9-May-08	<1	<1	<5.0	<0.0150	<0.00020	7.3	4,270	0.44	44.6	27.7
	26-Sep-08	<10	<10	6.7	0.0593	<0.00020	8.1	1,920	0.63	118	13.4
	25-Nov-08	<10	<10	10.1	0.0178	<0.00020	7.6	3,580	14.4	<12.0	<5.0
	26-Mar-09	ND (10)	ND (10)	ND (1.4)	0.0291	0.00013 J	7.1	5,690	1.6	143	8.2
	15-May-09	<10	<10	<5.0	<0.0150	<0.00020	7.5	2,410	2.4	18.4	60.2
	24-Sep-09	<10	<10	7.7	0.0325	<0.00020	7.2	4,980	4.3	34.0	16.4
	3-Dec-09	<1	<1	<5.0	<0.0150	<0.00020	7.5	1,450	NA	50.7	44.4
	23-Feb-10	<1	<1	<5.0	<0.0150	<0.00020	7.9	225	<0.10	<12.0	<1.9
	28-May-10	<10	<10	<5.0	0.0295	<0.00020	7.3	4,410	4.7	71.0	73.3
	17-Sep-10	<10	<10	<5.0	<0.0150	<0.00020	7.8	1,880	1.1	<12.0	11.4
	17-Nov-10	<10	<10	6.2	0.0184	<0.00020	7.5	3,640	4.2	20.0	22.0
	25-Feb-11	<1	<1	<5.0	<0.0150	<0.00020	7.5	364	<0.10	<12.0	<3.5
	17-May-11	<5	<5	<5.0	0.0208	<0.00020	7.8	3,330	16.3	12.8	50.0
	18-Aug-11	<1	<1	<5.0	<0.0150	<0.00020	7.6	439	1.6	<12.0	<4.9
	17-Nov-11	<1	<1	5.1	0.0167	<0.00020	7.6	3,530	3.9	24.4	41.1

Table 2. Surface Water Runoff Monitoring Data Summary
Closure Monitoring
Sunoco, Inc (R&M)
Point Breeze Processing Area Land Treatment Unit

Aquaterra Technologies, Inc.

Outfall Location	Date	Benzene (µg/L)	Toluene (µg/L)	Oil & Grease (mg/L)	Total Chromium (mg/L)	Total Mercury (mg/L)	pH	Specific Conductance (µmhos/cm)	Total Nitrate/ Nitrite Nitrogen (mg/L)	Total Suspended Solids (mg/L)	Biochemical Oxygen Demand (mg/L)
E	16-Nov-06	<20	<20	10.2	0.139	0.0037	7.9	1,980	1.1	3,570	38.1
	16-Mar-07	<1.0	<1.0	90	2.6	0.0074	8.39	500	11	2,400	NA
	4-Jun-07	1.1	<1.0	8.3	2.2	0.0054	7.59	949	27	6,900	52
	27-Sep-07	<5	<5	51.8	0.4	<0.0020	8.1	981	1.0	2,380	22.7
	18-Dec-07	<20	<20	21.9	4.72	0.0018	7.8	2,550	3.9	1,120	21.3
	7-Feb-08	<10	<10	10.6	0.682	0.00062	8.0	2,540	5.4	94.4	14.1
	20-Mar-08	<1	<1	<5.0	<0.0150	<0.00020	7.6	1,020	1.1	*<60.0	<2.9
	9-May-08	<1	<1	<5.0	<0.0150	<0.00020	7.4	1,940	0.18	71.6	4.8
	26-Sep-08	<10	<10	<5.0	0.0228	<0.00020	8.2	1,000	0.71	529	13.0
	25-Nov-08	<10	<10	5.6	<0.0150	<0.00020	8.3	3,470	1.6	<12.0	<5.4
	26-Mar-09	<1	<1	<5.0	<0.0150	<0.00020	8.1	3,190	4.2	<12.0	<5.0
	15-May-09	<10	<10	<5.0	<0.0150	<0.00020	7.7	935	0.29	<12.0	<2.9
	24-Sep-09	<1	<1	<5.0	<0.0150	<0.00020	8.1	2,290	<0.10	<12.0	11.7
	3-Dec-09	<1	<1	<5.0	<0.0150	<0.00020	7.7	688	NA	43.0	<3.0
	23-Feb-10	<1	<1	<5.0	<0.0150	<0.00020	7.99	188	<0.10	<12.0	<2.6
	28-May-10	<5	6	6.2	<0.0150	<0.00020	7.8	1,500	<1.0	23.6	13.8
	17-Sep-10	<1	<1	<5.0	<0.0150	<0.00020	7.9	1,430	<1.0	<12.0	11.7
	17-Nov-10	<10	<10	<5.0	<0.0150	<0.00020	8.1	1,930	1.1	<12.0	<4.3
	25-Feb-11	<1	<1	<5.0	<0.0150	<0.00020	7.3	448	0.24	<12.0	<2.7
	17-May-11	<1	<1	<5.0	<0.0150	<0.00020	8.0	1,620	1.5	<12.0	<5.1
	18-Aug-11	<1	<1	<5.0	<0.0150	<0.00020	7.4	637	<0.50	<12.0	<4.4
	17-Nov-11	<1	<1	<5.0	<0.0150	<0.00020	7.7	2,140	<0.10	19.2	13.8
F	16-Nov-06	<50	<50	<5.0	0.0272	<0.00020	7.9	2,920	1.2	107	44.9
	16-Mar-07	<1.0	<1.0	<5.0	1.6	0.0066	7.75	500	15	650	NA
	4-Jun-07	<1.0	<1.0	-	0.17	0.0004	7.66	1,330	18	250	12
	27-Sep-07	<5	<5	9.3	0.149	<0.00020	8	1,310	0.29	489	39.9
	18-Dec-07	<20	<20	8.8	0.13	<0.00020	7.5	2,720	5.8	110	<9.0
	7-Feb-08	<10	<10	7.2	0.0232	<0.00020	7.8	3,120	6.7	86.4	11.1
	20-Mar-08	<1	<1	<5.0	<0.0150	<0.00020	7.6	1,300	1.8	*<20.0	<5.5
	9-May-08	<1	<1	<5.0	<0.0150	<0.00020	7.6	2,390	2.2	14.4	4.9
	26-Sep-08	<10	<10	<5.0	<0.0150	<0.00020	8.1	1,010	0.93	112	8.3
	25-Nov-08	<1	<1	5.4	<0.0150	<0.00020	7.8	2,530	0.44	<12.0	<9.1
	26-Mar-09	<1	<1	<5.0	<0.0150	<0.00020	8.0	3,830	12.9	<12.0	<5.5
	15-May-09	<10	<10	<5.0	<0.0150	<0.00020	7.6	1,170	0.55	<12.0	<2.5
	24-Sep-09	<1	<1	<5.0	<0.0150	<0.00020	7.1	2,640	<0.10	<17.2	89.3
	3-Dec-09	<1	<1	<5.0	<0.0150	<0.00020	7.6	869	NA	<12.0	<4.3
	23-Feb-10	<1	<1	<5.0	<0.0150	<0.00020	8.2	214	<0.10	<12.0	<2.0
	28-May-10	<5	<5	<5.0	<0.0150	<0.00020	7.9	1,310	<1.0	20.8	19.5
	17-Sep-10	<1	<1	<5.0	<0.0150	<0.00020	7.7	1,420	<1.0	<12.0	22.1
	17-Nov-10	<10	<10	<5.0	<0.0150	<0.00020	7.7	2,930	5.5	<12.0	<4.4
	25-Feb-11	<1	<1	<5.0	<0.0150	<0.00020	7.3	513	<0.10	<12.0	<2.3
	17-May-11	<1	<1	<5.0	<0.0150	<0.00020	7.8	1,910	5.2	<12.0	<5.1
	18-Aug-11	<1	<1	<5.0	<0.0150	<0.00020	7.3	714	<0.50	<12.0	<4.0
	17-Nov-11	<1	<1	<5.0	<0.0150	<0.00020	7.6	2,500	1.0	<12.0	<8.4

Table 2. Surface Water Runoff Monitoring Data Summary
Closure Monitoring
Sunoco, Inc (R&M)
Point Breeze Processing Area Land Treatment Unit

Aquaterra Technologies, Inc.

Outfall Location	Date	Benzene (µg/L)	Toluene (µg/L)	Oil & Grease (mg/L)	Total Chromium (mg/L)	Total Mercury (mg/L)	pH	Specific Conductance (µmhos/cm)	Total Nitrate/ Nitrite Nitrogen (mg/L)	Total Suspended Solids (mg/L)	Biochemical Oxygen Demand (mg/L)
G/H	16-Nov-06	NS-dry	NS-dry	NS-dry	NS-dry	NS-dry	NS-dry	NS-dry	NS-dry	NS-dry	NS-dry
	16-Mar-07	<1.0	<1.0	<5.0	<0.0050	<0.00020	7.61	700	1.4	20	NA
	4-Jun-07	DRY	DRY	DRY	DRY	DRY	DRY	DRY	DRY	DRY	DRY
	27-Sep-07	DRY	DRY	DRY	DRY	DRY	DRY	DRY	DRY	DRY	DRY
	18-Dec-07	DRY	DRY	DRY	DRY	DRY	DRY	DRY	DRY	DRY	DRY
	7-Feb-08	DRY	DRY	DRY	DRY	DRY	DRY	DRY	DRY	DRY	DRY
	20-Mar-08	DRY	DRY	DRY	DRY	DRY	DRY	DRY	DRY	DRY	DRY
	9-May-08	DRY	DRY	DRY	DRY	DRY	DRY	DRY	DRY	DRY	DRY
	26-Sep-08	DRY	DRY	DRY	DRY	DRY	DRY	DRY	DRY	DRY	DRY
	25-Nov-08	DRY	DRY	DRY	DRY	DRY	DRY	DRY	DRY	DRY	DRY
	26-Mar-09	DRY	DRY	DRY	DRY	DRY	DRY	DRY	DRY	DRY	DRY
	15-May-09	DRY	DRY	DRY	DRY	DRY	DRY	DRY	DRY	DRY	DRY
	24-Sep-09	DRY	DRY	DRY	DRY	DRY	DRY	DRY	DRY	DRY	DRY
	3-Dec-09	DRY	DRY	DRY	DRY	DRY	DRY	DRY	DRY	DRY	DRY
	23-Feb-10	DRY	DRY	DRY	DRY	DRY	DRY	DRY	DRY	DRY	DRY
	28-May-10	DRY	DRY	DRY	DRY	DRY	DRY	DRY	DRY	DRY	DRY
	17-Sep-10	DRY	DRY	DRY	DRY	DRY	DRY	DRY	DRY	DRY	DRY
	17-Nov-10	DRY	DRY	DRY	DRY	DRY	DRY	DRY	DRY	DRY	DRY
	25-Feb-11	DRY	DRY	DRY	DRY	DRY	DRY	DRY	DRY	DRY	DRY
	17-May-11	DRY	DRY	DRY	DRY	DRY	DRY	DRY	DRY	DRY	DRY
	18-Aug-11	DRY	DRY	DRY	DRY	DRY	DRY	DRY	DRY	DRY	DRY
	17-Nov-11	DRY	DRY	DRY	DRY	DRY	DRY	DRY	DRY	DRY	DRY
Water Quality Criteria:		ND	ND	11	0.24	0.002	6.0-9.0	1,000,000	5	30	40
Detection Limits:		5	5	0.2	<0.01	<0.005	-	-	-	-	-

NS-I = Not sampled, inaccessible
NS-dry = Not sampled, dry
Water Quality Criteria and Detection Limits are established by the Sunoco, Inc (R&M) Ammended Closure Plan (original date November 1988, ammended November 2002 and May 2004), in Tables CP-2 and CP-3, respectively.
Post Closure Requirements include: Oil&Grease, pH, Specific Conductance, Chromium, Mercury, Benzene and Toluene.
Bolded values are outside the established Water Quality Criteria.
*Reporting Limit was increased due to insufficient sample volume.
If LOQ (limit of quantitation) for benzene and toluene is greater than one, it is typically due to sample foaming. If the dilution factor is greater than 20, the data is generally reported to the method detection limit (MDL).