METCO
ENVIRONMENTAL

SOURCE EMISSIONS SURVEY
OF
CITGO PETROLEUM CORP.
FCCU WESP STACK
LEMONT, ILLINOIS

JUNE AND JULY 2010

TESTING COMPANY: METCO ENVIRONMENTAL
P.O. BOX 598
ADDISON, TEXAS 75001
972-931-7127
FILE NUMBER 10-274B

" I certify that I have personally checked and am familiar with the information submitted herein, and based on my inquiries of those individuals immediately responsible for obtaining the information, I believe the submitted information is true, accurate, and complete."

James R. Monfries
Senior Quality Assurance Manager

METCO ENVIRONMENTAL

File Number 10-274B

TABLE OF CONTENTS

	PAGE
INTRODUCTION	1
SUMMARY OF RESULTS	2
DISCUSSION OF RESULTS	5
DESCRIPTION OF PROCESS	6
DESCRIPTION OF SAMPLING LOCATION	7
SAMPLING AND ANALYTICAL PROCEDURES	9
DESCRIPTION OF TESTS	13
APPENDICES	14
A. Location of Sampling Points	2 pages
B. Source Emissions Calculations	16 pages
C. Calibration Data	23 pages
D. Field Testing Data	20 pages
E. Analytical Data	11 pages
F. Plant Operational Data	2 pages
G. Chain of Custody	5 pages
H. Resumes of Test Personnel	10 pages
	103 Total pages

METCO ENVIRONMENTAL

SOURCE EMISSIONS SURVEY
CITGO PETROLEUM CORP.
FCCU WESP STACK
LEMONT, ILLINOIS
FILE NUMBER 10-274B

INTRODUCTION

METCO Environmental, P.O. Box 598, Addison, Texas, conducted a source emissions survey of CITGO Petroleum Corp., located in Lemont, Illinois, on June 29 through July 1, 2010. The purpose of these tests was to determine the concentrations of particulate matter being emitted to the atmosphere via the FCCU WESP Stack. The testing was performed while the unit was operating at an average coke burn rate of 61,324 lbs/hr.

The sampling was performed by the following METCO personnel: John Cutaia – Project Supervisor, Kyle Gilbert, Will Starkey, Sam Morris, and Landon Bippert.

The sampling followed the procedures set forth in the Code of Federal Regulations, Title 40, Chapter I, Part 60, Appendix A, Methods 1, 2, 3B, 4, and 5B.

METCO ENVIRONMENTAL

SUMMARY OF RESULTS

FCCU WESP Stack

Run Number	"Front-Half" Non-Sulfuric Acid Particulate Matter (gr/dscf*)	(lbs/hr)	(lb/mlb of coke burn)
1A	0.0415	90.19	1.46
1B	0.0525	106.19	1.72
2A	0.0320	68.48	1.48
2B	0.0436	90.41	1.12
3A	0.0191	40.83	0.67
3B	0.0190	38.78	0.64
Average	0.0345 6	72.31 48	1.18
Allowable Emission Rate	----	----	≤ 1.0

*29.92" Hg, 68°F (760 mm Hg, 20°C)

METCO ENVIRONMENTAL

SUMMARY OF RESULTS

FCCU WESP Stack

"Method 5B/202"

Run Number	1A	2A	3A
Date	06/30/10	07/01/10	07/01/10
Time	1908-2034	1208-1346	1500-1636
Stack Flow Rate – ACFM	374,617	374,859	374,164
Stack Flow Rate – DSCFM*	253,287	249,596	249,542
% Water Vapor - % Vol.	21.71	23.73	23.57
% CO_2 - % Vol.	14.3	14.4	14.5
% O_2 - % Vol.	4.2	3.6	3.7
Excess Air @ Sampling Point - %	24.1	19.9	20.6
Stack Temperature - °F	148	147	147
Stack Pressure – "Hg	29.64	29.92	29.90
Percent Isokinetic	102.2	99.3	97.9
Volume Dry Gas Sampled – DSCF*	34.284	32.804	32.342
Coke Burned – mlb	61.870	61.222	60.881
Particulates Probe, Cyclone & Filter Catch grains/dscf*	0.0415	0.0320	0.0191
grains/cf @ Stack Conditions	0.0280	0.212	0.127
lbs/hr	90.19	68.48	40.83
lb/mlb coke burned	1.46	1.12	0.67

* 29.92 "Hg, 68°F (760 mm Hg, 20°C)

METCO ENVIRONMENTAL

SUMMARY OF RESULTS

FCCU WESP Stack

"Method 5B/OTM-28"

Run Number	1B	2B	3B
Date	06/30/10	07/01/10	07/01/10
Time	1908-2034	1208-1346	1500-1636
Stack Flow Rate – ACFM	361,609	362,854	360,197
Stack Flow Rate – DSCFM*	235,905	242,089	238,409
% Water Vapor - % Vol.	24.32	23.45	23.89
% CO_2 - % Vol.	14.3	14.4	14.5
% O_2 - % Vol.	4.2	3.6	3.7
Excess Air @ Sampling Point - %	24.1	19.9	20.6
Stack Temperature - °F	149	148	149
Stack Pressure – "Hg	29.64	29.92	29.90
Percent Isokinetic	98.8	96.6	95.9
Volume Dry Gas Sampled – DSCF*	30.843	30.956	30.261
Coke Burned – mlb	61.870	61.222	60.881
Particulates Probe, Cyclone & Filter Catch grains/dscf*	0.0525	0.0436	0.0190
grains/cf @ Stack Conditions	0.0341	0.0290	0.0125
lbs/hr	106.19	90.41	38.78
lb/mlb coke burned	1.72	1.48	0.64

* 29.92 "Hg, 68°F (760 mm Hg, 20°C)

DISCUSSION OF RESULTS

Duplicate sampling trains were performed for each of the three runs for a total of six tests.

The six tests for non-sulfuric acid particulate matter appeared to be valid representations of the actual emissions during the tests. All leak checks performed on the sampling train and the pitot tubes showed no leaks before or after each test. The indicative parameters calculated from the field data were in close agreement. The moisture percentages for the tests were within 7.4 percent of the mean value. The measured flow rates (Q_s) for the tests were within 3.6 percent of the mean value. The rates of sampling for the tests were within the specified limits (90 to 110 percent isokinetic). The greatest deviation from 100 percent isokinetic was 4.1 percent.

The calculated emissions (pounds per hour) of particulate matter for the six tests showed a range of -46.5 percent to +46.5 percent variation from the mean value.

METCO ENVIRONMENTAL

DESCRIPTION OF PROCESS

The FCC Flue Gas system takes Regenerator Flue Gas and reduces the CO, NO_x, SO_x, and catalyst fines so that the Flue Gas that is discharged meets the federally mandated standards. The Wet Gas Scrubber consists of a circulating caustic solution to remove SO_2 and catalyst fines, a Wet Electrostatic Precipitator to further remove residual catalyst fines and SO_3, and a stack to achieve a required discharge height and for continuous emission monitoring.

DESCRIPTION OF SAMPLING LOCATION

The sampling location on the FCCU WESP Stack is 169 feet 8 inches above the ground. The sampling ports are located 79 feet (5.64 stack diameters) downstream from a constriction in the stack and 42 feet (3.00 stack diameters) upstream from the outlet of the stack.

METCO ENVIRONMENTAL

SAMPLING LOCATION

FCCU WESP Stack

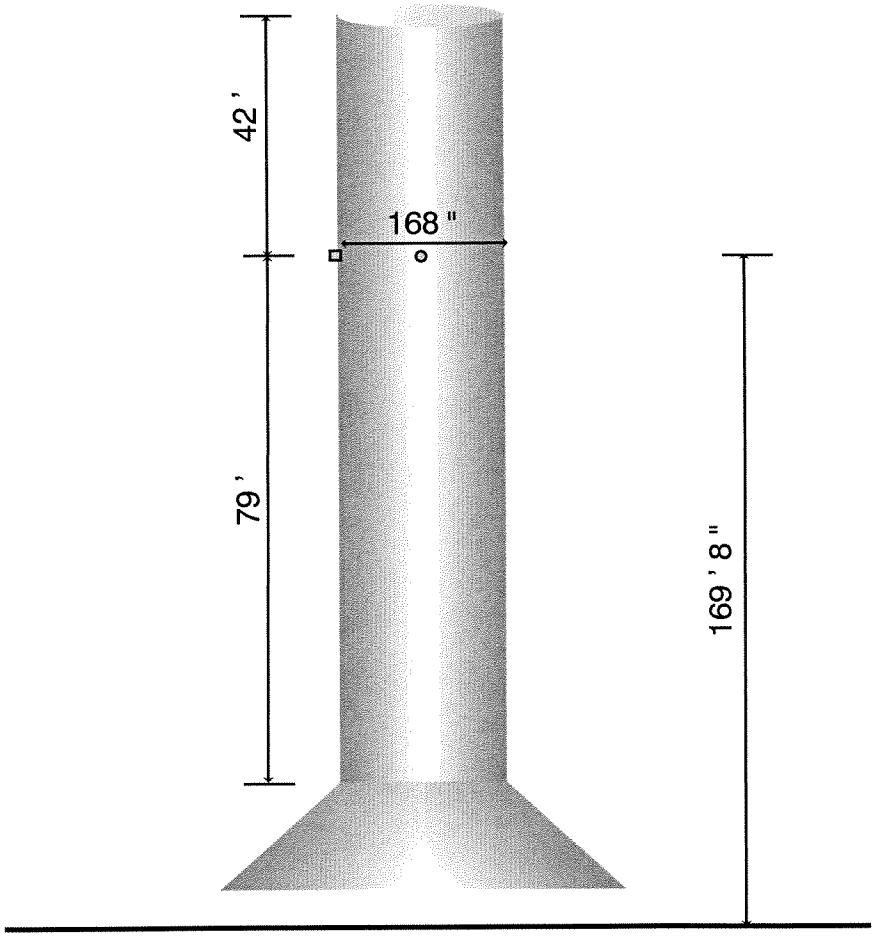

Not to Scale

SAMPLING AND ANALYTICAL PROCEDURES

The sampling followed the procedures set forth in the Code of Federal Regulations, Title 40, Chapter I, Part 60, Appendix A, Methods 1, 2, 3B, 4, and 5B.

A preliminary velocity traverse was made at each of the four ports on the stack, in order to determine the uniformity and magnitude of the flow prior to testing. All traverse points were checked for cyclonic flow and the average angle of flow was equal to 2.5 degrees. Alternate procedures would be required if the angle of flow was greater than 20 degrees. Six traverse points were sampled from each of the four ports for a total of twenty-four traverse points.

The sampling trains were leak checked at the nozzle before each test, and again after each test at the highest vacuum reading recorded during the test. This was done to predetermine the possibility of a diluted sample.

The pitot tube lines were checked for leaks before and after each test under both a vacuum and a pressure. The lines were also checked for clearance and the manometer was zeroed before each test.

An integrated orsat sample was collected and analyzed according to EPA Method 3B during each test.

Non-Sulfuric Acid Particulate Matter

Six samples for non-sulfuric acid particulate matter were collected. The samples were taken according to EPA Methods 1, 2, 3B, 4, and 5B. For each run, samples of two and one-half minute duration were taken isokinetically at each of the twelve traverse points for a total sampling time of 60 minutes. Reagent blanks were submitted.

METCO ENVIRONMENTAL

The " front-half " of the sampling train contained the following components:

Stainless Steel Nozzle
Heated Glass Probe @ 320°F ± 25°F
Heated Glass Fiber Filter and Glass Support @ 320°F ± 25°F

The " back-half " of the "A" sampling train contained the following components:

Impinger Number	Contents	Amount	Parameter Collected
1	Deionized Water	200 ml	Moisture
2	Deionized Water	200 ml	Moisture
3	Empty	------	Moisture
4	Silica Gel	200 g	Moisture

The " back-half " of the "B" sampling train contained the following components:

Condenser Coil
Condensate Trap
Impinger 1 - Modified Design, Empty
Teflon Fiber Filter and Teflon Support @ ≤ 85°F
Impinger 3 - Modified Design, 100 ml Deionized Water
Impinger 4 - Modified Design, Silica Gel

Particulate matter emissions were calculated from gravimetric analysis using only the "front-half " collections of the sampling train.

METCO ENVIRONMENTAL

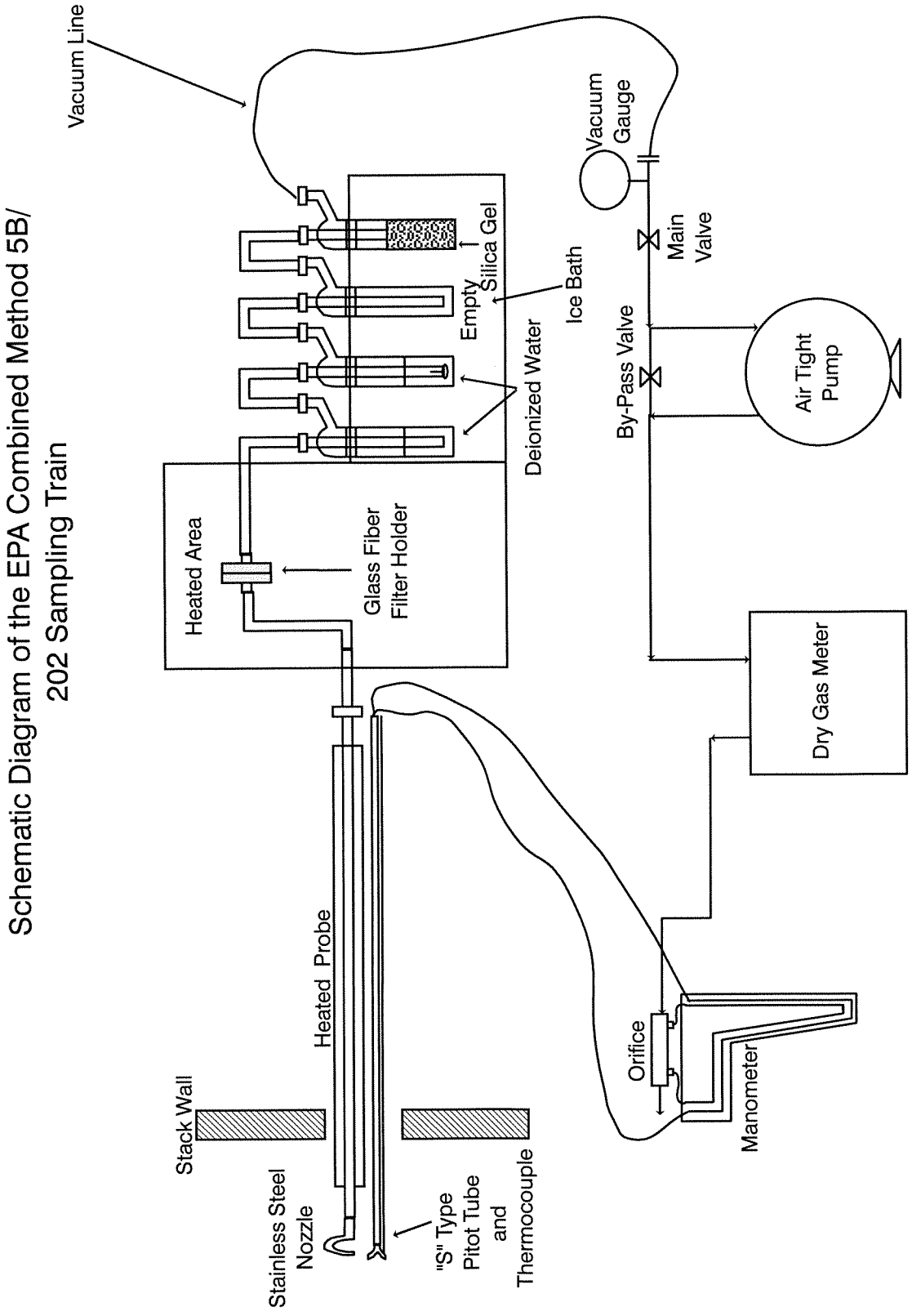

Schematic Diagram of the EPA Combined Method 5B/ 202 Sampling Train

METCO ENVIRONMENTAL

Schematic Diagram of the EPA Combined Methods 5B and OTM-28 Sampling Train

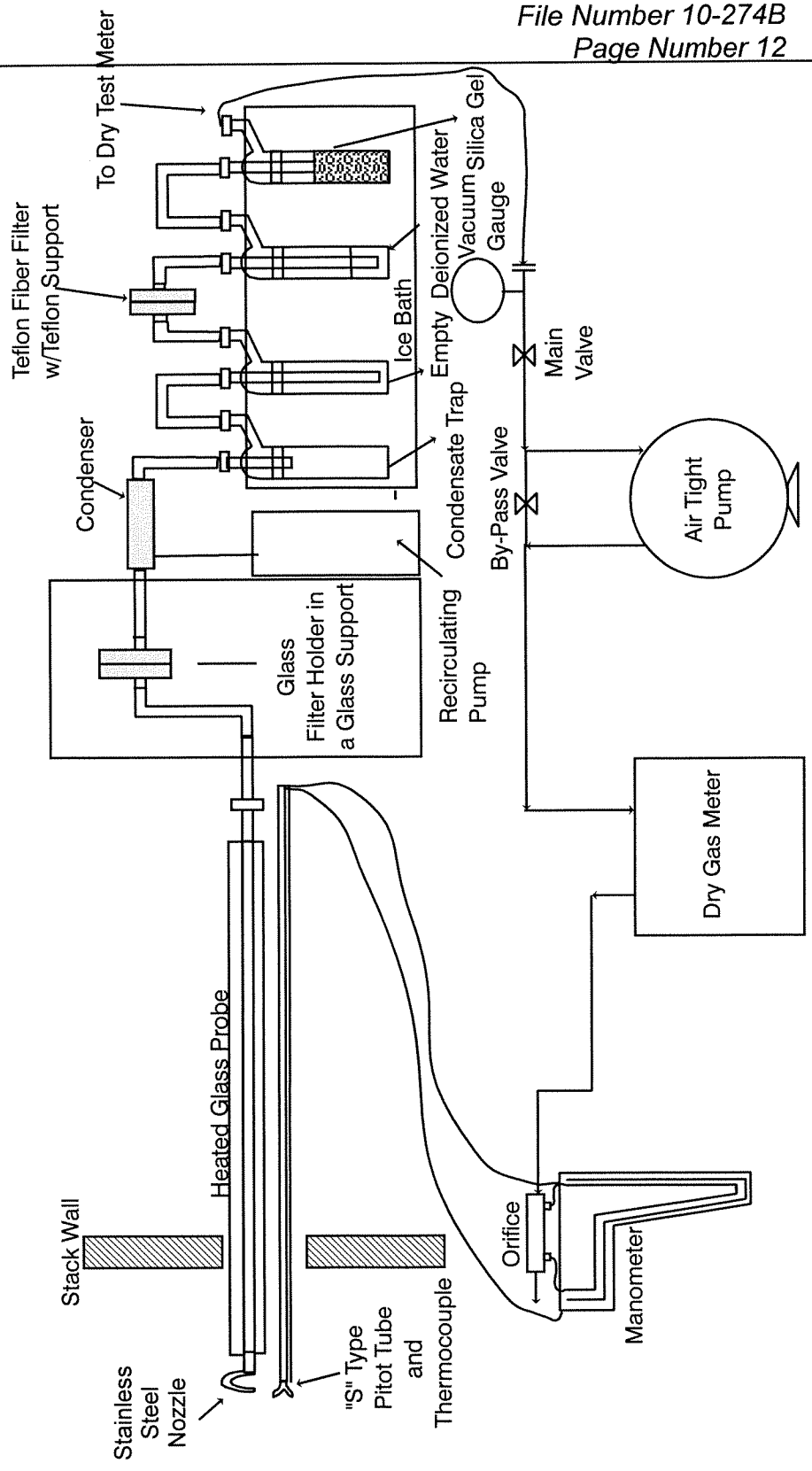

DESCRIPTION OF TESTS

Personnel from METCO Environmental arrived at the plant at 6:30 p.m. on Tuesday, June 29, 2010. After meeting with plant personnel and attending a brief safety orientation, the equipment was moved onto the FCCU WESP Stack. The equipment was secured and all work was completed at 9:15 p.m.

On Wednesday, June 30, work began at 7:00 a.m. The preliminary data was collected. The first set of tests for non-sulfuric acid particulate matter began at 7:08 p.m. and was completed at 8:34 p.m. The samples were recovered. The equipment was secured for the night and all work was completed at 9:00 p.m.

On Thursday, July 1, work began at 8:00 a.m. The preliminary data was collected. The second set of tests for non-sulfuric acid particulate matter began at 12:08 p.m. Testing continued until completion of the third set of tests at 4:36 p.m.

The samples were recovered and the equipment was moved off of the stack and loaded into the sampling van. The samples were recovered and transported to METCO Environmental's laboratory in Dallas, Texas, for analysis and evaluation.

Field operations at CITGO Petroleum Corp., FCCU WESP Stack, located in Lemont, Illinois, were completed at 6:00 p.m. on Thursday, July 1, 2010.

APPENDICES

A. Location of Sampling Points
B. Source Emissions Calculations
C. Calibration Data
D. Field Testing Data
E. Analytical Data
F. Plant Operational Data
G. Chain of Custody
H. Resumes of Test Personnel

METCO ENVIRONMENTAL

APPENDIX A

Location of Sampling Points
FCCU WESP Stack

The sampling ports are located 79 feet (5.64 stack diameters) downstream from a constriction in the stack and 42 feet (3.00 stack diameters) upstream from the outlet of the stack. The locations of the sampling points were calculated as follows:

Port and Wall Thickness = 13 3/4 inches
Inside Stack Diameter = 168 inches

Point Number*	Percent of Diameter From Wall	Distance From Wall
1	2.1	3 1/2 "
2	6.7	11 1/4 "
3	11.8	19 13/16 "
4	17.7	29 3/4 "
5	25.0	42 "
6	35.6	59 13/16 "

* Calculated as one-half of a twelve point traverse

METCO ENVIRONMENTAL

APPENDIX A

Location of Sampling Points

FCCU WESP Stack

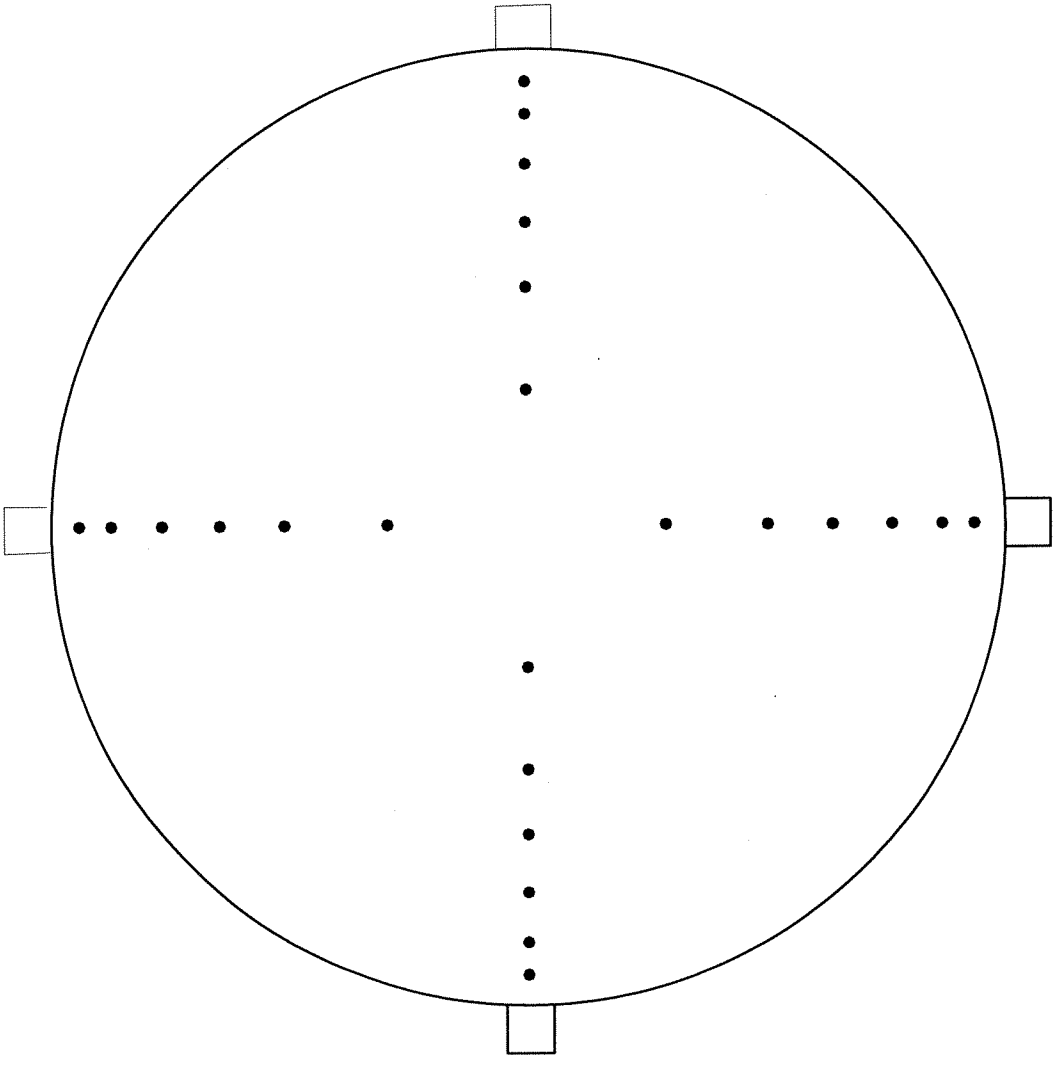

METCO ENVIRONMENTAL

APPENDIX B

Nomenclature and Equations for Calculation of Source Emissions

METCO ENVIRONMENTAL

NOMENCLATURE FOR PARTICULATE CALCULATIONS

Symbol	English Units	Metric Units	Description
A_s	in.^{2}	m^2	Stack Area
C_{an}	gr/dscf*	g/dscm*	Particulate - probe, cyclone, and filter
C_{ao}	gr/dscf*	g/dscm*	Particulate - total
C_{at}	gr/CF @ stack conditions	g/m^3	Particulate - probe, cyclone, and filter
C_{au}	gr/CF @ stack conditions	g/m^3	Particulate - total
C_{aw}	lbs/hr	kg/hr	Particulate - probe, cyclone, and filter
C_{ax}	lbs/hr	kg/hr	Particulate - total
C_p			Pitot Tube Calibration Factor
D_n	in.	m	Sampling Nozzle Diameter
%EA			Percent Excess Air at sampling point
g	32.174 ft/sec^2		Acceleration of Gravity
%I			Percent Isokinetic
%M			Percent Moisture in the stack gas by volume
M_d			Mole fraction of dry gas

* 29.92 " Hg, 68° F (760 mm Hg, 20° C)

METCO ENVIRONMENTAL

Symbol	English Units	Metric Units	Description
m_f	mg	mg	Particulate - probe, cyclone, and filter
M_{water}	18 lb/lb-mole		Molecular Weight of water
m_t	mg	mg	Particulate - total
MW	lb/lb-mole	g/g-mole	Molecular Weight of stack gas
MW_{air}	28.96 lb/ lb-mole		Molecular Weight of air
MW_d	lb/lb-mole	g/g-mole	Molecular Weight of dry stack gas
P_b	"Hg Absolute	mm Hg	Barometric Pressure
P_m	"H_2O	mm H_2O	Orifice Pressure drop
P_s	"Hg Absolute	mm Hg	Stack Pressure
ΔP	"H_2O	mm H_2O	Velocity Head of stack gas
P_{std}	29.92 "Hg	760 mm Hg	Standard Barometric Pressure
Q_a	ACFM	m^3/hr	Stack Gas Volume at actual stack conditions
Q_s	DSCFM*	dscm/hr*	Stack Gas Volume at 29.92 "Hg, 528°R, dry
R	21.83 "Hg-ft^3/lb-mole°R		Universal Gas Constant
T_m	°F	°C	Average Gas Meter Temperature

* 29.92 " Hg, 68° F (760 mm Hg, 20° C)

METCO ENVIRONMENTAL

Symbol	English Units	Metric Units	Description
T_t	min	min	Net time of test
T_s	°F	°C	Stack Temperature
T_{std}	528°R	293°K	Standard Temperature
V_m	ft^3	m^3	Volume of dry gas sampled @ meter conditions
Vm_{std}	dscf*	dscm*	Volume of dry gas sampled @ standard conditions
V_s	fpm	m/sec	Stack velocity @ stack conditions
V_w	ml	ml	Total water collected in impingers and silica gel
Vw_{gas}	scf*	scm*	Volume of water vapor collected @ standard conditions
ρ_{air}	0.0752 lbs/ft^3		Density of Air
ρ_{water}	1 g/ml		Density of Water
ρ_{man}	62.32 lbs/ft^3		Density of Manometer Oil

Standard Conditions: 29.92 "Hg, 68°F (760 mm Hg, 20°C)

* 29.92 " Hg, 68° F (760 mm Hg, 20° C)

METCO ENVIRONMENTAL

EXAMPLE CALCULATIONS

1. Volume of dry gas sampled at standard conditions. *

$$Vm_{std} = Vm \left(\frac{T_{std}}{T_m + 460} \right) \left[\frac{P_b + \frac{P_m}{13.6}}{P_{std}} \right]$$

$$Vm_{std} = 17.65\, Vm \left[\frac{P_b + \frac{P_m}{13.6}}{T_m + 460} \right] = dscf$$

$$Vm_{std} = dscf \times 0.028317 = dscm$$

2. Volume of water vapor collected at standard conditions. *

$$Vw_{gas} = \frac{(V_w - gms\ SO_2 - gms\ H_2S)\ \rho_{water}\ R\ T_{std}}{P_{std}\ M_{water}\ 453.6}$$

$$Vw_{gas} = 0.0472\ (V_w - gms\ SO_2 - gms\ H_2S) = scf$$

$$Vw_{gas} = scf \times 0.028317 = scm$$

3. Percent moisture in stack gas.

$$\%M = \frac{Vw_{gas}}{Vm_{std} + Vw_{gas}} \times 100 = \%$$

* 29.92 " Hg, 68° F (760 mm Hg, 20° C)

METCO ENVIRONMENTAL

4. Mole fraction of dry gas.

$$M_d = \frac{100 - \%M}{100}$$

5. Average molecular weight of dry stack gas.

$$MW_d = \left[\%CO_2 \times \frac{44}{100}\right] + \left[\%O_2 \times \frac{32}{100}\right] + \left[\%N_2 \times \frac{28}{100}\right] + \left[\%CO \times \frac{28}{100}\right] = lb/lb\text{-}mole$$

$$= g/g\text{-}mole$$

6. Molecular weight of stack gas.

$$MW = MW_d \times M_d + 18\,(1 - M_d) = \frac{lb}{lb\text{-}mole} = g/g\text{-}mole$$

7. Percent excess air at sampling point.

$$\%EA = \frac{100\,[\%O_2 - (0.5\,\%CO)]}{0.265\,(\%N_2) - [\%O_2 - (0.5\,\%CO)]}$$

8. Stack Pressure.

$$P_s = P_b + \frac{Stack\ Pressure\ "H_2O}{13.6} = "Hg\ Absolute$$

$$P_s = "Hg\ Abs. \times 25.4 = mm\ Hg$$

METCO ENVIRONMENTAL

9. Stack velocity at stack conditions.

$$V_s = C_p\, 60 \left[\frac{2g \times \rho_{man} \times P_{std} \times MW_{air} \times (T_s + 460)}{12 \times \rho_{air} \times P_s \times MW \times T_{std}} \right]^{1/2} \times \sqrt{\Delta P}\ average$$

$$V_s = 5{,}123.8\, C_p \left[\frac{(T_s + 460)}{P_s \times MW} \right]^{1/2} \sqrt{\Delta P}\ average = fpm$$

$$V_s = fpm \times 0.00508 = m/sec$$

10. Dry stack gas volume at standard conditions. *

$$Q_s = \frac{1}{144} V_s \times A_s \times M_d \times \frac{T_{std}}{T_s + 460} \times \frac{P_s}{P_{std}}$$

$$Q_s = \frac{0.123\, V_s \times A_s \times M_d \times P_s}{T_s + 460} = DSCFM$$

$$Q_s = DSCFM \times 1.6990 = dscm/hr$$

11. Actual stack gas volume at stack conditions.

$$Q_a = \frac{V_s \times A_s}{144} = ACFM$$

$$Q_a = ACFM \times 1.6990 = m^3/hr$$

* 29.92 " Hg, 68° F (760 mm Hg, 20° C)

METCO ENVIRONMENTAL

12. Percent Isokinetic.

$$\%I = \frac{Vm_{std} \times (T_s + 460) \times P_{std} \times 100 \times 144\ in^2/ft^2}{M_d \times T_{std} \times P_s \times T_t \times V_s (\frac{\pi \times D_n^2}{4})}$$

$$\%I = \frac{1039 \times Vm_{std} \times (T_s + 460)}{M_d \times P_s \times T_t \times V_s \times D_n^2}$$

13. Particulate – probe, cyclone, and filter.

$$C_{an} = \frac{m_f}{Vm_{std}} \times \frac{1\ gr}{64.8\ mg}$$

$$C_{an} = 0.0154 \times \frac{m_f}{Vm_{std}} = gr/dscf\ *$$

$$C_{an} = gr/dscf \times 2.290 = g/dscm\ *$$

14. Particulate total.

$$C_{ao} = 0.0154 \times \frac{m_t}{Vm_{std}} = gr/dscf\ *$$

$$C_{ao} = gr/dscf \times 2.290 = g/dscm\ *$$

* 29.92 " Hg, 68° F (760 mm Hg, 20° C)

METCO ENVIRONMENTAL

15. Particulate – probe, cyclone, and filter at stack conditions.

$$C_{at} = C_{an} \times \frac{P_s}{P_{std}} \times \frac{(T_{std})}{(T_s + 460)} \times M_d$$

$$C_{at} = \frac{17.65 \times C_{an} \times P_s \times M_d}{T_s + 460} = gr/CF$$

$$C_{at} = gr/CF \times 2.290 = g/m^3$$

16. Particulate – total, at stack conditions.

$$C_{au} = \frac{17.65 \times C_{ao} \times P_s \times M_d}{T_s + 460} = gr/CF$$

$$C_{au} = gr/CF \times 2.290 = g/m^3$$

* 29.92 " Hg, 68° F (760 mm Hg, 20° C)

METCO ENVIRONMENTAL

17. Particulate – probe, cyclone, and filter.

$$C_{aw} = C_{an} \times Q_s \times \frac{60\ min}{1\ hr} \times \frac{1\ lb}{7000\ gr}$$

$$C_{aw} = 0.00857 \times C_{an} \times Q_s = lbs/hr$$

$$C_{aw} = lbs/hr \times 0.4536 = kg/hr$$

18. Particulate – total.

$$C_{ax} = 0.00857 \times C_{ao} \times Q_s = lbs/hr$$

$$C_{ax} = lbs/hr \times 0.4536 = kg/hr$$

* 29.92 " Hg, 68° F (760 mm Hg, 20° C)

METCO ENVIRONMENTAL

SOURCE EMISSION SURVEY

JOB NUMBER: 10-274
JOB NAME: CITGO
LOCATION: LEMONT, IL
UNIT TESTED: FCCU WESP STACK (5B/202)

SOURCE EMISSION CALCULATIONS

			RUN NUMBER		
SYMBOL	DESCRIPTION	UNITS	1	2	3
DATE			06/30/10	07/01/10	07/01/10
BEGIN TIME			1908	1208	1500
END TIME			2034	1346	1636
P(b)	BAROMETRIC PRESSURE	"Hg Abs.	29.66	29.94	29.92
		(mm Hg)	(753.00)	(760.00)	(760.00)
P(m)	ORIFICE PRESSURE DROP	"H2O	0.980	0.982	0.979
		(mm H2O)	(24.900)	(24.900)	(24.900)
	DGM CALIBRATION FACTOR		1.012	1.012	1.012
V(m)	VOLUME DRY GAS SAMPLED	ft.^3	35.344	33.751	33.542
	@ METER CONDITIONS	(m^3)	(1.001)	(0.956)	(0.950)
	LEAK CHECK VOLUME	ft.^3	0.000	0.000	0.000
T(m)	AVERAGE GAS METER	DEG.F	81	85	89
	TEMPERATURE	(DEG.C)	(27)	(29)	(32)
V(m[std])*	VOLUME DRY GAS SAMPLED	DSCF	34.284	32.804	32.342
	@ STANDARD CONDITIONS*	(DSCM)	(0.971)	(0.929)	(0.916)
V(w)	TOTAL WATER COLLECTED, IMPINGERS & SILICA GEL	ml	201.4	216.3	211.3
V(w[gas])	VOLUME WATER VAPOR	SCF	9.506	10.209	9.973
	COLLECTED @ STANDARD	(SCM)	(0.269)	(0.289)	(0.282)
	CONDITIONS*				
%M	MOISTURE IN STACK GAS BY VOLUME	%	21.71	23.73	23.57
Md	MOL FRACTION OF DRY GAS		0.7829	0.7627	0.7643
Tt	NET TIME OF TEST	MINUTES	60	60	60

* 68 Deg.F, 29.92 "Hg (20 Deg.C, 760 mm Hg)

METCO ENVIRONMENTAL

SOURCE EMISSION CALCULATIONS

JOB NUMBER: 10-274
JOB NAME: CITGO
LOCATION: LEMONT, IL
UNIT TESTED: FCCU WESP STACK (5B/202)

			RUN NUMBER		
SYMBOL	DESCRIPTION	UNITS	1	2	3
CO2		%	14.3	14.4	14.5
O2		%	4.2	3.6	3.7
CO		%	0.0	0.0	0.0
N2		%	81.5	82.0	81.8
%EA	EXCESS AIR @ SAMPLING POINT	%	24.1	19.9	20.6
MWd	MOLECULAR WEIGHT OF DRY STACK GAS	LB/LB-MOLE (g/g-MOLE)	30.46 (30.46)	30.45 (30.45)	30.47 (30.47)
MW	MOLECULAR WEIGHT OF STACK GAS	LB/LB-MOLE (g/g-MOLE)	27.75 (27.75)	27.49 (27.49)	27.53 (27.53)
Cp	PITOT TUBE CALIBRATION		0.810	0.810	0.810
DELTA P	VELOCITY HEAD OF STACK GAS	"H2O (mm H20)	0.466 (11.800)	0.466 (11.800)	0.466 (11.800)
DELTA P ^(1/2)		"H2O	0.682	0.683	0.682
Ts	STACK TEMPERATURE	DEG. F (DEG. C)	148 (64)	147 (64)	147 (64)
Ps	STACK PRESSURE	"Hg Abs. (mm Hg) "H20	29.64 (753.00) -0.32	29.92 (760.00) -0.32	29.90 (759.00) -0.34
Vs	STACK VELOCITY @ STACK CONDITIONS	FPM (m/SEC.)	2,434 (12)	2,435 (12)	2,431 (12)
As	STACK AREA	(SQ.INCHES) (SQ.METERS)	22,167 (14)	22,167 (14)	22,167 (14)
Qs	DRY STACK GAS VOLUME @ STANDARD CONDITIONS* WET STACK GAS VOLUME @ STANDARD CONDITIONS*	DSCFM (DSCM/HR) WSCFH	253,287 (430,335) 19,411,445	249,596 (424,008) 19,635,169	249,542 (423,972) 19,589,847
Qa	ACTUAL STACK GAS VOLUME @ STACK CONDITIONS	ACFM (m^3/HR)	374,617 (636,474)	374,859 (636,885)	374,164 (635,705)
Dn	SAMPLING NOZZLE DIAM.	IN. (m)	0.250 (0.006)	0.250 (0.006)	0.250 (0.006)
%I	PERCENT ISOKINETIC	%	102.2	99.3	97.9

* 68 Deg.F, 29.92 "Hg (20 Deg.C, 760 mm Hg)

METCO ENVIRONMENTAL

SOURCE EMISSION CALCULATIONS

JOB NUMBER: 10-274
JOB NAME: CITGO
LOCATION: LEMONT, IL
UNIT TESTED: FCCU WESP STACK (5B/202)

			RUN NUMBER		
SYMBOL	DESCRIPTION	UNITS	1	2	3
Mf	FILT. PARTICULATE - PROBE, CYCLONE AND FILTER	mg	92.5	68.2	40.1
Mt	COND. PARTICULATE - TOTAL	mg	----	----	----
Can	FILT. PARTICULATE - PROBE, CYCLONE AND FILTER	gr/DSCF* (g/DSCM)	0.0415 (0.0951)	0.0320 (0.0733)	0.0191 (0.0437)
Cao	COND. PARTICULATE - TOTAL	gr/DSCF* (g/DSCM)	---- ----	---- ----	---- ----
Cat	FILT. PARTIC.-PROBE, CYCLONE AND FILTER @ STACK COND.	gr/CF (g/m3)	0.0280 (0.0641)	0.0212 (0.0485)	0.0127 (0.0291)
Cau	COND. PARTICULATE - TOTAL @ STACK CONDITIONS	gr/CF (g/m3)	---- ----	---- ----	---- ----
Caw	FILT. PARTICULATE - PROBE, CYCLONE AND FILTER	LBS/HR (Kg/HR)	90.19 (40.91)	68.48 (31.06)	40.83 (18.52)
Cax	COND. PARTICULATE - TOTAL	LBS/HR (Kg/HR)	---- ----	---- ----	---- ----

* 68 Deg.F, 29.92 "Hg (20 Deg.C, 760 mm Hg)

METCO ENVIRONMENTAL

SOURCE EMISSION SURVEY

JOB NUMBER: 10-274
JOB NAME: CITGO
LOCATION: LEMONT, IL
UNIT TESTED: FCCU WESP STACK (5B/OTM 28)

SOURCE EMISSION CALCULATIONS

			RUN NUMBER		
SYMBOL	DESCRIPTION	UNITS	1	2	3
DATE			06/30/10	07/01/10	07/01/10
BEGIN TIME			1908	1208	1500
END TIME			2034	1346	1636
P(b)	BAROMETRIC PRESSURE	"Hg Abs.	29.66	29.94	29.92
		(mm Hg)	(753.00)	(760.00)	(760.00)
P(m)	ORIFICE PRESSURE DROP	"H2O	0.881	0.905	0.892
		(mm H2O)	(22.400)	(23.000)	(22.700)
	DGM CALIBRATION FACTOR		1.000	1.000	1.000
V(m)	VOLUME DRY GAS SAMPLED	ft.^3	31.863	31.914	31.276
	@ METER CONDITIONS	(m^3)	(0.902)	(0.904)	(0.886)
	LEAK CHECK VOLUME	ft.^3	0.000	0.000	0.000
T(m)	AVERAGE GAS METER	DEG.F	82	86	87
	TEMPERATURE	(DEG.C)	(28)	(30)	(31)
V(m[std])*	VOLUME DRY GAS SAMPLED	DSCF	30.843	30.956	30.261
	@ STANDARD CONDITIONS*	(DSCM)	(0.873)	(0.877)	(0.857)
V(w)	TOTAL WATER COLLECTED, IMPINGERS & SILICA GEL	ml	210.0	200.9	201.2
V(w[gas])	VOLUME WATER VAPOR	SCF	9.912	9.482	9.497
	COLLECTED @ STANDARD	(SCM)	(0.281)	(0.269)	(0.269)
	CONDITIONS*				
%M	MOISTURE IN STACK GAS BY VOLUME	%	24.32	23.45	23.89
Md	MOL FRACTION OF DRY GAS		0.7568	0.7655	0.7611
Tt	NET TIME OF TEST	MINUTES	60	60	60

* 68 Deg.F, 29.92 "Hg (20 Deg.C, 760 mm Hg)

METCO ENVIRONMENTAL

SOURCE EMISSION CALCULATIONS

JOB NUMBER: 10-274
JOB NAME: CITGO
LOCATION: LEMONT, IL
UNIT TESTED: FCCU WESP STACK (5B/OTM 28)

			RUN NUMBER		
SYMBOL	DESCRIPTION	UNITS	1	2	3
CO2		%	14.3	14.4	14.5
O2		%	4.2	3.6	3.7
CO		%	0.0	0.0	0.0
N2		%	81.5	82.0	81.8
%EA	EXCESS AIR @ SAMPLING POINT	%	24.1	19.9	20.6
MWd	MOLECULAR WEIGHT OF DRY STACK GAS	LB/LB-MOLE (g/g-MOLE)	30.46 (30.46)	30.45 (30.45)	30.47 (30.47)
MW	MOLECULAR WEIGHT OF STACK GAS	LB/LB-MOLE (g/g-MOLE)	27.43 (27.43)	27.53 (27.53)	27.49 (27.49)
Cp	PITOT TUBE CALIBRATION		0.820	0.820	0.820
DELTA P	VELOCITY HEAD OF STACK GAS	"H2O (mm H20)	0.420 (10.700)	0.431 (10.900)	0.423 (10.700)
DELTA P ^(1/2)		"H2O	0.646	0.653	0.647
Ts	STACK TEMPERATURE	DEG. F (DEG. C)	149 (65)	148 (64)	149 (65)
Ps	STACK PRESSURE	"Hg Abs. (mm Hg) "H20	29.64 (753.00) -0.32	29.92 (760.00) -0.32	29.90 (759.00) -0.34
Vs	STACK VELOCITY @ STACK CONDITIONS	FPM (m/SEC.)	2,349 (12)	2,357 (12)	2,340 (12)
As	STACK AREA	(SQ.INCHES) (SQ.METERS)	22,167 (14)	22,167 (14)	22,167 (14)
Qs	DRY STACK GAS VOLUME @ STANDARD CONDITIONS* WET STACK GAS VOLUME @ STANDARD CONDITIONS*	DSCFM (DSCM/HR) WSCFH	235,905 (400,803) 18,702,828	242,089 (411,309) 18,974,971	238,409 (405,057) 18,794,561
Qa	ACTUAL STACK GAS VOLUME @ STACK CONDITIONS	ACFM (m^3/HR)	361,609 (614,374)	362,854 (616,489)	360,197 (611,975)
Dn	SAMPLING NOZZLE DIAM.	IN. (m)	0.250 (0.006)	0.250 (0.006)	0.250 (0.006)
%I	PERCENT ISOKINETIC	%	98.8	96.6	95.9

* 68 Deg.F, 29.92 "Hg (20 Deg.C, 760 mm Hg)

METCO ENVIRONMENTAL

SOURCE EMISSION CALCULATIONS

JOB NUMBER: 10-274
JOB NAME: CITGO
LOCATION: LEMONT, IL
UNIT TESTED: FCCU WESP STACK (5B/OTM 28)

			RUN NUMBER		
SYMBOL	DESCRIPTION	UNITS	1	2	3
Mf	FILT. PARTICULATE - PROBE, CYCLONE AND FILTER	mg	105.2	87.6	37.3
Mt	COND. PARTICULATE - TOTAL	mg	----	----	----
Can	FILT. PARTICULATE - PROBE, CYCLONE AND FILTER	gr/DSCF*	0.0525	0.0436	0.0190
		(g/DSCM)	(0.1203)	(0.0998)	(0.0435)
Cao	COND. PARTICULATE - TOTAL	gr/DSCF*	----	----	----
		(g/DSCM)	----	----	----
Cat	FILT. PARTIC.-PROBE, CYCLONE AND FILTER @ STACK COND.	gr/CF	0.0341	0.0290	0.0125
		(g/m3)	(0.0781)	(0.0664)	(0.0286)
Cau	COND. PARTICULATE - TOTAL @ STACK CONDITIONS	gr/CF	----	----	----
		(g/m3)	----	----	----
Caw	FILT. PARTICULATE - PROBE, CYCLONE AND FILTER	LBS/HR	106.19	90.41	38.78
		(Kg/HR)	(48.17)	(41.01)	(17.59)
Cax	COND.PARTICULATE - TOTAL	LBS/HR	----	----	----
		(Kg/HR)	----	----	----

* 68 Deg.F, 29.92 "Hg (20 Deg.C, 760 mm Hg)

METCO ENVIRONMENTAL

APPENDIX C

Calibration Data

Equipment	Calibration Factor	Calibration Date
Pitot Tube #T4-E-6	0.810	06/11/10
Pitot Tube #T4-E-8	0.820	07/07/10
Probe Tip #10-274-I	0.250	06/30/10
Probe Tip #10-274-II	0.250	06/30/10
Dry Gas Meter #49-5	1.012	05/25/10
Stack Unit Orifice #49-5		06/02/10
Digital Temperature Indicator #49-5		05/25/10
Dry Gas Meter #T2-4	1.000	04/19/10
Stack Unit Orifice # T2-4		01/05/10
Digital Temperature Indicator # T2-4		04/19/10
Barometer #49-2		05/24/10

METCO ENVIRONMENTAL

Pitot Tube Calibration

Date: 6/11/10 Time: 1600

Pitot No: T4-E-6 T_s: 74

Pitot Dimensions: 12' x 3/8" C_{pstd}: 0.990

Pitot Inspections

Pitot tips level and perpendicular YES / NO
Pitot tips free from obstruction YES / NO
Pitot tips damaged YES / NO

Motor Setting	fps mark	Calibration Standard Start	Calibration Standard End	$\sqrt{\text{Standard Average}}$	High	$\sqrt{\text{High}}$	Cal. Factor	Low	$\sqrt{\text{Low}}$	Cal. Factor
7	20	0.10	0.10	0.316	0.15	0.387	0.808	0.15	0.387	0.808
14	30	0.20	0.20	0.447	0.30	0.548	0.808	0.29	0.539	0.822
20	40	0.36	0.36	0.600	0.54	0.735	0.808	0.53	0.728	0.816
28	50	0.56	0.56	0.748	0.85	0.922	0.804	0.82	0.906	0.818
35	60	0.80	0.80	0.894	1.20	1.095	0.808	1.20	1.095	0.808
41	70	1.10	1.10	1.049	1.60	1.265	0.821	1.60	1.265	0.821
50	80	1.40	1.40	1.183	2.10	1.449	0.808	2.00	1.414	0.828
62	90	1.80	1.80	1.342	2.65	1.628	0.816	2.55	1.597	0.832
28*	**50***	0.56	0.56	0.748	0.85	0.922	0.804	0.82	0.906	0.818
28*	**50***	0.56	0.56	0.748	0.85	0.922	0.804	0.82	0.906	0.818
Average							0.810			0.819

***not included in average**

$$C_p = C_{pstd}\left(\frac{\sqrt{\Delta P_{std}}}{\sqrt{\Delta P}}\right)$$

Summary of Results:

Normal high side calibration factor 0.810

variation + 1.36 % variation - 0.74 %

Normal low side calibration factor 0.819

variation + 1.59 % variation - 1.34 %

Calibrator: Freeman

Office: Dallas

QA/QC Check
Completeness ✓ Legibility ✓ Accuracy ✓ Specifications ✓ Reasonableness ✓

Checked by: J Cutaia

METCO ENVIRONMENTAL

Pitot Tube Calibration

Date: 7/7/2010 Time: 1000

Pitot No: T4E8 T_s: 70

Pitot Dimensions: 3/8 C_{pstd}: 0.990

Pitot Inspections

Pitot tips level and perpendicular YES / NO

Pitot tips free from obstruction YES / NO

Pitot tips damaged YES / NO

Motor Setting	fps mark	Calibration Standard Start	Calibration Standard End	$\sqrt{\text{Standard Average}}$	High	$\sqrt{\text{High}}$	Cal. Factor	Low	$\sqrt{\text{Low}}$	Cal. Factor
7	20	0.10	0.10	0.316	0.15	0.387	0.808	0.15	0.387	0.808
14	30	0.20	0.20	0.447	0.29	0.539	0.821	0.29	0.539	0.821
20	40	0.36	0.36	0.600	0.52	0.714	0.824	0.52	0.721	0.824
28	50	0.56	0.56	0.748	0.81	0.900	0.823	0.81	0.900	0.823
35	60	0.80	0.80	0.894	1.20	1.095	0.808	1.20	1.095	0.808
41	70	1.10	1.10	1.049	1.60	1.265	0.821	1.60	1.265	0.821
50	80	1.40	1.40	1.183	2.00	1.414	0.828	2.00	1.414	0.828
62	90	1.80	1.80	1.342	2.60	1.612	0.824	2.60	1.581	0.824
28*	**50***	0.56	0.56	0.748	0.81	0.900	0.823	0.81	0.900	0.823
28*	**50***	0.56	0.56	0.748	0.81	0.900	0.823	0.81	0.900	0.823
Average										

***not included in average**

$$C_p = C_{pstd}\left(\frac{\sqrt{\Delta P_{std}}}{\sqrt{\Delta P}}\right)$$

Summary of Results:

Normal high side calibration factor 0.820

variation + 0.97 variation - 1.46

Normal low side calibration factor 0.819

variation + 1.10 variation - 1.34

Calibrator: Michael Saporito

Office: Dallas

QA/QC Check

Completeness ✓ Legibility ✓ Accuracy ✓ Specifications ✓ Reasonableness ✓

Checked by: Kyle Gilbert

10-274B

Version 2
12 March 2008

METCO ENVIRONMENTAL

Nozzle Calibration

Nozzle Set No. _____ Caliper ID: T-6

Date: 6/30/10 Calibrator: JC

Office/Location: Dallas

	1	2	3	4	5	6
Reading 1	0.250	0.250				
Reading 2	0.257	0.250				
Reading 3	0.250	0.250				
Reading 4	0.250	0.249				
Reading 5	0.250	0.250				
Reading 6	0.250	0.250				
Reading 7	0.250	0.250				
Reading 8	0.250	0.250				
Reading 9	0.250	0.250				
Reading 10	0.250	0.250				
	10-274-I	10-274-II				
Average	0.250	0.250				

	7	8	9	10	11	12
Reading 1						
Reading 2						
Reading 3						
Reading 4						
Reading 5						
Reading 6						
Reading 7						
Reading 8						
Reading 9						
Reading 10						
Average						

QA/QC Check
Completeness ✓ Legibility ✓ Accuracy ✓ Specifications ✓ Reasonableness ✓

Checked by: _____

10-274B

Version 2
1 January 2009

MITCO ENVIRONMENTAL

Dry Gas Meter Calibration

Dry Gas Meter Number 49-5

Date: 5-25-10

ΔH ("H_2O)	C_{dg}
0.50	1.017 ✓
1.00	1.015 ✓
1.50	1.013 ✓
2.00	1.012 ✓
3.00	1.007 ✓
4.00	1.007 ✓
Average	1.012 ✓

Variation: + ~~0.49~~ 0.50 % BG

- 0.49 %

Adjustment Required: Yes____ No X

Calibrator: [signature]

Office: Cherry Hill, NJ

QA/QC Check

Completeness ✓ Legibility ✓ Accuracy ✓ Specifications ✓ Reasonableness ✓

Checked by: [signature]

METCO ENVIRONMENTAL

DRY GAS METER CALIBRATION

Meter Number: 49-5 Wet Test Meter No : 8

Date: 5-25-10 Calibrator: R. Johns

$$\text{Wet Test Meter } VM_{std} = 17.65 \times V_m \frac{P_b + \frac{P_m}{13.6}}{T_m + 460} \times C_f = \_\_\_\_ \text{ scf}$$

$$\text{Dry Test Meter } VM_{std} = 17.65 \times V_m \frac{P_b + \frac{P_m}{13.6}}{T_m + 460} = \_\_\_\_ \text{ scf}$$

Run No: ~~10~~ 0.5 "H_2O P_b: 30.20 "Hg

Wet Test Meter C_f: 1.000 Control Module Vacuum: 5 "Hg

	Wet Test Meter				Dry Gas Meter			
	Time	Meter Reading	T_m	P_m	Meter Reading	T_m Inlet	T_m Outlet	P_m
End	803	7.543	66 °F	-2.2 "H_2O	401.787	71 °F	67 °F	0.5 "H_2O
Start	747	0.000	66 °F	-2.2 "H_2O	394.389	70 °F	65 °F	0.5 "H_2O
	16	7.543 cf^{Δ}	66 °F_{avg}	-2.2 "H_2O_{avg}	7.398 cf^{Δ}	68 °F_{avg}		0.5 "H_2O_{avg}

$cf^{\Delta} = V_m$

$$\text{Wet Test Meter } VM_{std} = 17.65 \times 7.543 \frac{30.20 + \frac{-2.2}{13.6}}{66 + 460} \times 1.000 \; C_f = 7.603 \text{ scf}$$

$$\text{Dry Gas Meter } VM_{std} = 17.65 \times 7.398 \frac{30.20 + \frac{0.5}{13.6}}{68 + 460} = 7.478 \text{ scf}$$

$$\text{Calibration Factor } (C_{dg}) = \frac{\text{Wet Test Meter } VM_{std}}{\text{Dry Gas Meter } VM_{std}} \quad C_{dg} = \frac{7.603}{7.478} = 1.017$$

QA/QC Check

Completeness ✓ Legibility ✓ Accuracy ✓ Specifications ✓ Reasonableness ✓

Checked by: [illegible]

METCO ENVIRONMENTAL

DRY GAS METER CALIBRATION

Meter Number: 49-5

Date: 5-25-10

Wet Test Meter No : 8

Calibrator: R. Jones

$$\text{Wet Test Meter } VM_{std} = 17.65 \times V_m \frac{P_b + \frac{P_m}{13.6}}{T_m + 460} \times C_f = \_\_\_\_ \text{ scf}$$

$$\text{Dry Test Meter } VM_{std} = 17.65 \times V_m \frac{P_b + \frac{P_m}{13.6}}{T_m + 460} = \_\_\_\_ \text{ scf}$$

Run No: 1 @ 1.0 ✓ "H_2O

P_b: 30.20 "Hg

Wet Test Meter C_f: 1.000

Control Module Vacuum: 5 "Hg

	Wet Test Meter				Dry Gas Meter			
	Time	Meter Reading	T_m	P_m	Meter Reading	T_m Inlet	T_m Outlet	P_m
End	816	7.053	66 °F	-3.2 "H_2O	409.114	74 °F	68 °F	1.0 "H_2O
Start	805	0.000	66 °F	-3.2 "H_2O	402.186	71 °F	67 °F	1.0 "H_2O
	11	7.053 cf$^\Delta$	66 °F$_{avg}$	-3.2 "H_2O_{avg}	6.928 cf$^\Delta$	70 ✓ °F$_{avg}$		1.0 "H_2O_{avg}

$cf^\Delta = V_m$

$$\text{Wet Test Meter } VM_{std} = 17.65 \times 7.053 \frac{30.20 + \frac{-3.2}{13.6}}{66 + 460} \times 1.000 \; C_f = 7.092 \text{ scf}$$

$$\text{Dry Gas Meter } VM_{std} = 17.65 \times 6.928 \frac{30.20 + \frac{1.0}{13.6}}{70 + 460} = 6.985 \text{ scf}$$

$$\text{Calibration Factor } (C_{dg}) = \frac{\text{Wet Test Meter } VM_{std}}{\text{Dry Gas Meter } VM_{std}} \quad C_{dg} = \frac{7.092}{6.985} = 1.015$$

QA/QC Check

Completeness ✓ Legibility ✓ Accuracy ✓ Specifications ✓ Reasonableness ✓

Checked by: B

METCO ENVIRONMENTAL

DRY GAS METER CALIBRATION

Meter Number: 49-5

Wet Test Meter No : 8

Date: 5-25-10

Calibrator: R Jones

$$\text{Wet Test Meter } VM_{std} = 17.65 \times V_m \frac{P_b + \frac{P_m}{13.6}}{T_m + 460} \times C_f = \_\_\_\_ \text{ scf}$$

$$\text{Dry Test Meter } VM_{std} = 17.65 \times V_m \frac{P_b + \frac{P_m}{13.6}}{T_m + 460} = \_\_\_\_ \text{ scf}$$

Run No: 1 @ 1.5 "H_2O

P_b: 30.20 "Hg

Wet Test Meter C_f: 1.000

Control Module Vacuum: 5 "Hg

	Wet Test Meter					Dry Gas Meter				
	Time	Meter Reading		T_m	P_m	Meter Reading	T_m Inlet	T_m Outlet	P_m
End	832	10.511		66 °F	4.2 "H_2O	419.852	76 °F	70 °F	1.5 "H_2O
Start	818	0.000		66 °F	-4.2 "H_2O	409.503	72 °F	68 °F	1.5 "H_2O
	14	10.511	cf^{Δ}	66 °F_{avg}	-4.2 "H_2O_{avg}	10.349	cf^{Δ}	72 °F_{avg}	1.5 "H_2O_{avg}

$cf^{\Delta} = V_m$

$$\text{Wet Test Meter } VM_{std} = 17.65 \times 10.511 \frac{30.20 + \frac{-4.2}{13.6}}{66 + 460} \times 1.000 \; C_f = 10.543 \text{ scf}$$

$$\text{Dry Gas Meter } VM_{std} = 17.65 \times 10.349 \frac{30.20 + \frac{1.5}{13.6}}{72 + 460} = 10.407 \text{ scf}$$

$$\text{Calibration Factor } (C_{dg}) = \frac{\text{Wet Test Meter } VM_{std}}{\text{Dry Gas Meter } VM_{std}} \quad C_{dg} = \frac{10.543}{10.407} = 1.013$$

QA/QC Check

Completeness ✓ Legibility ✓ Accuracy ✓ Specifications ✓ Reasonableness ✓

Checked by: R [illegible]

METCO ENVIRONMENTAL

DRY GAS METER CALIBRATION

Meter Number: 49-5

Wet Test Meter No : 8

Date: 5-25-10

Calibrator: R. Jones

$$\text{Wet Test Meter } VM_{std} = 17.65 \times V_m \frac{P_b + \frac{P_m}{13.6}}{T_m + 460} \times C_f = \_\_\_\_ \text{ scf}$$

$$\text{Dry Test Meter } VM_{std} = 17.65 \times V_m \frac{P_b + \frac{P_m}{13.6}}{T_m + 460} = \_\_\_\_ \text{ scf}$$

Run No: 1 @ 2.0 "H_2O

P_b: 30.20 "Hg

Wet Test Meter C_f: 1.000

Control Module Vacuum: 5 "Hg

	Wet Test Meter				Dry Gas Meter			
	Time	Meter Reading	T_m	P_m	Meter Reading	T_m Inlet	T_m Outlet	P_m
End	847	10.855	66 °F	-5.2 "H_2O	431.104	77 °F	71 °F	2.0 "H_2O
Start	834	0.000	66 °F	-5.2 "H_2O	420.422	74 °F	70 °F	2.0 "H_2O
	13	10.855 ✓ cf^{Δ}	66 °F_{avg}	-5.2 "H_2O_{avg}	10.682 ✓ cf^{Δ}	73 ✓ °F_{avg}		2.0 "H_2O_{avg}

$cf^{\Delta} = V_m$

$$\text{Wet Test Meter } VM_{std} = 17.65 \times 10.855 \frac{30.20 + \frac{-5.2}{13.6}}{66 + 460} \times 1.000 \; C_f = 10.861 \checkmark \text{ scf}$$

$$\text{Dry Gas Meter } VM_{std} = 17.65 \times 10.682 \frac{30.20 + \frac{2.0}{13.6}}{73 + 460} = 10.735 \checkmark \text{ scf}$$

$$\text{Calibration Factor } (C_{dg}) = \frac{\text{Wet Test Meter } VM_{std}}{\text{Dry Gas Meter } VM_{std}} \quad C_{dg} = \frac{10.861}{10.735} = 1.012 \checkmark$$

QA/QC Check

Completeness ✓ Legibility ✓ Accuracy ✓ Specifications ✓ Reasonableness ✓

Checked by: B [illegible]

METCO ENVIRONMENTAL

DRY GAS METER CALIBRATION

Meter Number: 49-5 Wet Test Meter No : 8

Date: 5-25-10 Calibrator: RJones

$$\text{Wet Test Meter } VM_{std} = 17.65 \times V_m \frac{P_b + \frac{P_m}{13.6}}{T_m + 460} \times C_f = \_\_\_\_ \text{ scf}$$

$$\text{Dry Test Meter } VM_{std} = 17.65 \times V_m \frac{P_b + \frac{P_m}{13.6}}{T_m + 460} = \_\_\_\_ \text{ scf}$$

Run No: 1030 "H_2O P_b: 30.20 "Hg

Wet Test Meter C_f: 1.000 Control Module Vacuum: 5 "Hg

	Wet Test Meter				Dry Gas Meter			
	Time	Meter Reading	T_m	P_m	Meter Reading	T_m Inlet	T_m Outlet	P_m
End	903	13.910	67 °F	-6.9 "H_2O	445.268	80 °F	72 °F	3.0 "H_2O
Start	849	0.000	67 °F	-6.9 "H_2O	431.579	76 °F	71 °F	3.0 "H_2O
	14	13.910 ✓ cf^{Δ}	67 °F_{avg}	-6.9 "H_2O_{avg}	13.689 ✓ cf^{Δ}	75 ✓ °F_{avg}		3.0 "H_2O_{avg}

$cf^{\Delta} = V_m$

$$\text{Wet Test Meter } VM_{std} = 17.65 \times \frac{13.910}{} \frac{30.20 + \frac{-6.9}{13.6}}{67 + 460} \times \frac{1.000}{} C_f = \frac{13.833}{} \text{ scf}$$

$$\text{Dry Gas Meter } VM_{std} = 17.65 \times \frac{13.689}{} \frac{30.20 + \frac{3.0}{13.6}}{75 + 460} = \frac{13.738}{} \text{ scf}$$

$$\text{Calibration Factor } (C_{dg}) = \frac{\text{Wet Test Meter } VM_{std}}{\text{Dry Gas Meter } VM_{std}} \quad C_{dg} = \frac{13.833}{13.738} = \frac{1.007}{}$$

QA/QC Check

Completeness ✓ Legibility ✓ Accuracy ✓ Specifications ✓ Reasonableness ✓

Checked by: [signature]

METCO ENVIRONMENTAL

DRY GAS METER CALIBRATION

Meter Number: 49-5

Wet Test Meter No : 8

Date: 5-25-10

Calibrator: K Jones

$$\text{Wet Test Meter } VM_{std} = 17.65 \times V_m \frac{P_b + \frac{P_m}{13.6}}{T_m + 460} \times C_f = \_\_\_\_ \text{ scf}$$

$$\text{Dry Test Meter } VM_{std} = 17.65 \times V_m \frac{P_b + \frac{P_m}{13.6}}{T_m + 460} = \_\_\_\_ \text{ scf}$$

Run No: 1040 "H_2O

P_b: 30.20 "Hg

Wet Test Meter C_f: 1.000

Control Module Vacuum: 5 "Hg

	Wet Test Meter				Dry Gas Meter			
	Time	Meter Reading	T_m	P_m	Meter Reading	T_m Inlet	T_m Outlet	P_m
End	914	10.752	67 °F	-9.6 "H_2O	456.684	82 °F	73 °F	4.0 "H_2O
Start	905	0.000	67 °F	-9.6 "H_2O	446.159	79 °F	72 °F	4.0 "H_2O
	9	10.752 cf^{Δ}	67 °F$_{avg}$	-9.6 "H_2O_{avg}	10.525 cf^{Δ}	77 °F$_{avg}$		4.0 "H_2O_{avg}

$cf^{\Delta} = V_m$

$$\text{Wet Test Meter } VM_{std} = 17.65 \times 10.752 \frac{30.20 + \frac{-9.6}{13.6}}{67 + 460} \times 1.000 \; C_f = 10.626 \text{ scf}$$

$$\text{Dry Gas Meter } VM_{std} = 17.65 \times 10.525 \frac{30.20 + \frac{4.0}{13.6}}{77 + 460} = 10.549 \text{ scf}$$

$$\text{Calibration Factor } (C_{dg}) = \frac{\text{Wet Test Meter } VM_{std}}{\text{Dry Gas Meter } VM_{std}} \quad C_{dg} = \frac{10.626}{10.549} = 1.007$$

QA/QC Check

Completeness ✓ Legibility ✓ Accuracy ✓ Specifications ✓ Reasonableness ✓

Checked by: [illegible]

STACK UNIT ORIFICE NO: **49-5** DATE: **06/02/10** CALIBRATED BY: **RYAN JONES** CHECKED BY: 0

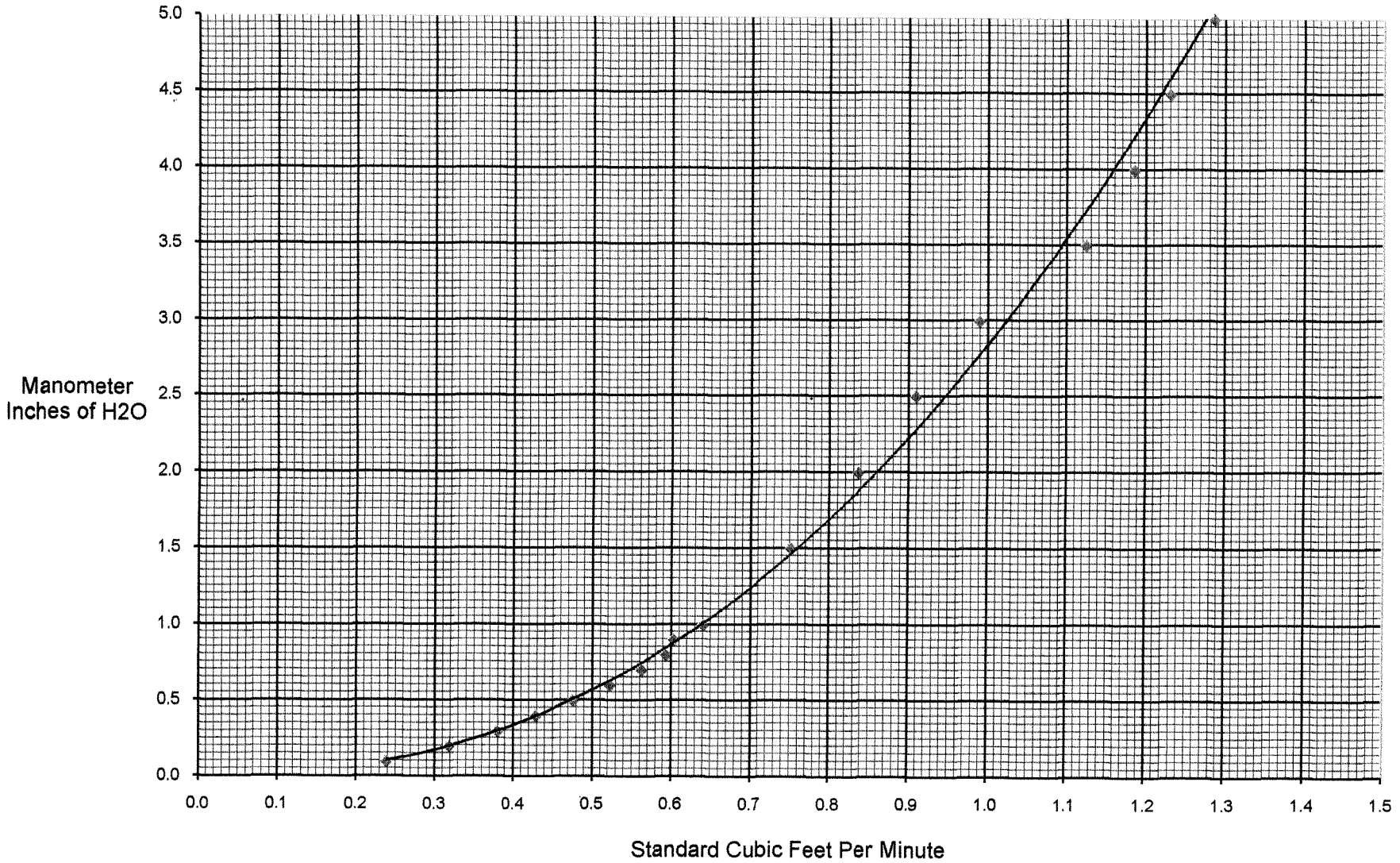

METCO ENVIRONMENTAL

Digital Temperature Indicator No. 49-5

Calibration Data

Date: 5-25-10

Reference Thermometer No. I - IV

Media	Time	Reference Thermometer (°F)	DTI (°F)
Ambient Air	734	66	66 ✓
Ice Bath	737	33	33 ✓
Boiling Water	749	213	214 ✓
Oven 250	812	248	248 ✓
Oven 300	821	308	309 ✓
Oven 350	837	346	347 ✓
Oven 375	850	370	371 ✓

Meter Adjusted? YES _____ NO X

Calibrator [signature]

Office: Cherry Hill, NJ

QA/QC Check
Completeness ✓ Legibility ✓ Accuracy ✓ Specifications ✓ Reasonableness ✓

Checked by: [signature]

METCO ENVIRONMENTAL

Dry Gas Meter Calibration

Dry Gas Meter Number TC-4

Date: 4-19-10

ΔH ("H_2O)	C_{dg}
0.50	1.006 ✓
1.00	1.003 ✓
1.50	1.001 ✓
2.00	0.998 ✓
3.00	0.998 ✓
4.00	0.993 ✓
Average	1.000 ✓

Variation: + 0.60 ✓ %

- 0.70 ✓ %

Adjustment Required: Yes _____ No ✓

Calibrator: Ryan Nell

Office: Houston

QA/QC Check

Completeness ✓ Legibility ✓ Accuracy ✓ Specifications ✓ Reasonableness ✓

Checked by: B Eb

110-2774B

METCO ENVIRONMENTAL

DRY GAS METER CALIBRATION

Meter Number: T2-4 Wet Test Meter No: 2

Date: 4-19-10 Calibrator: R. Williams

$$\text{Wet Test Meter } VM_{std} = 17.65 \times V_m \frac{P_b + \frac{P_m}{13.6}}{T_m + 460} \times C_f = \_\_\_\_ \text{ scfm}$$

$$\text{Dry Test Meter } VM_{std} = 17.65 \times V_m \frac{P_b + \frac{P_m}{13.6}}{T_m + 460} = \_\_\_\_ \text{ scfm}$$

Run No: 1 @ 0.50 ✓ "H_2O P_b: 29.94 "Hg

Wet Test Meter C_f: 0.998 Control Module Vacuum: 5.0 "Hg

	Wet Test Meter				Dry Gas Meter			
	Time	Meter Reading	T_m	P_m	Mete Reading	T_m Inlet	T_m Outlet	P_m
End	13:01	5.140	73 °F	-1.60 "H_2O	326.155	76 °F	72 °F	0.50 "H_2O
Start	0:00	0.000	73 °F	-1.60 "H_2O	321.080	73 °F	70 °F	0.50 "H_2O
		5.140 ✓ cf^{Δ}	73 ✓ $°F_{avg}$	-1.60 "H_2O_{avg}	5.075 ✓ cf^{Δ}	73 ✓ $°F_{avg}$		✓ 0.50 "H_2O_{avg}

$cf^{\Delta} = V_m$

$$\text{Wet Test Meter } VM_{std} = 17.65 \times \underline{5.140} \frac{29.94 + \frac{-1.60}{13.6}}{73 + 460} \times \underline{0.998} C_f = \underline{5.069} \text{ scfm}$$

$$\text{Dry Gas Meter } VM_{std} = 17.65 \times \underline{5.075} \frac{29.94 + \frac{0.50}{13.6}}{73 + 460} = \underline{5.041} \text{ scfm}$$

$$\text{Calibration Factor } (C_{dg}) = \frac{\text{Wet Test Meter } VM_{std}}{\text{Dry Gas Meter } VM_{std}} \quad C_{dg} = \frac{5.069}{5.041} = \underline{1.006}$$

QA/QC Check

Completeness ✓ Legibility ✓ Accuracy ✓ Specifications ✓ Reasonableness ✓

Checked by: [signature]

10-274B

METCO ENVIRONMENTAL

DRY GAS METER CALIBRATION

Meter Number: T2-4 Wet Test Meter No: 2

Date: 4-19-10 Calibrator: R. Williams

$$\text{Wet Test Meter } VM_{std} = 17.65 \times V_m \frac{P_b + \frac{P_m}{13.6}}{T_m + 460} \times C_f = \_\_\_\_ \text{ scfm}$$

$$\text{Dry Test Meter } VM_{std} = 17.65 \times V_m \frac{P_b + \frac{P_m}{13.6}}{T_m + 460} = \_\_\_\_ \text{ scfm}$$

Run No: 1 @ 1.00 "H_2O P_b: 29.96 "Hg

Wet Test Meter C_f: 0.998 Control Module Vacuum: 5.0 "Hg

	Wet Test Meter				Dry Gas Meter			
	Time	Meter Reading	T_m	P_m	Mete Reading	T_m Inlet	T_m Outlet	P_m
End	9:10	5.160	73 °F	-2.00 "H_2O	331.580	77 °F	74 °F	1.00 "H_2O
Start	8:00	0.000	73 °F	-2.00 "H_2O	326.463	75 °F	73 °F	1.00 "H_2O
$cf^{\Delta} = V_m$		5.160 ✓	cf^{Δ} 73 ✓	°F_{avg} -2.00 ✓ "H_2O_{avg}	5.117 ✓	cf^{Δ} 75 ✓	°F_{avg}	1.00 ✓ "H_2O_{avg}

$$\text{Wet Test Meter } VM_{std} = 17.65 \times 5.160 \frac{29.96 + \frac{-2.00}{13.6}}{73 + 460} \times 0.998 \; C_f = 5.084 \text{ scfm}$$

$$\text{Dry Gas Meter } VM_{std} = 17.65 \times 5.117 \frac{29.96 + \frac{1.00}{13.6}}{75 + 460} = 5.070 \text{ scfm}$$

$$\text{Calibration Factor } (C_{dg}) = \frac{\text{Wet Test Meter } VM_{std}}{\text{Dry Gas Meter } VM_{std}} \quad C_{dg} = \frac{5.084}{5.070} = 1.003$$

QA/QC Check

Completeness ✓ Legibility ✓ Accuracy ✓ Specifications ✓ Reasonableness ✓

Checked by: [signature]

10-274B

METCO ENVIRONMENTAL

DRY GAS METER CALIBRATION

Meter Number: T2-4 Wet Test Meter No : 2

Date: 4-19-10 Calibrator: R. Williams

$$\text{Wet Test Meter } VM_{std} = 17.65 \times V_m \frac{P_b + \frac{P_m}{13.6}}{T_m + 460} \times C_f = \_\_\_\_ \text{ scfm}$$

$$\text{Dry Test Meter } VM_{std} = 17.65 \times V_m \frac{P_b + \frac{P_m}{13.6}}{T_m + 460} = \_\_\_\_ \text{ scfm}$$

Run No: 1 @ 1.50 ✓ "H_2O P_b: 29.96 "Hg

Wet Test Meter C_f: 0.998 Control Module Vacuum: 5-0 "Hg

	Wet Test Meter				Dry Gas Meter			
	Time	Meter Reading	T_m	P_m	Mete Reading	T_m Inlet	T_m Outlet	P_m
End	15:00	10.125	73 °F	-2.50 "H_2O	342.301	80 °F	75 °F	1.50 "H_2O
Start	0:00	0.000	73 °F	-2.50 "H_2O	332.228	77 °F	74 °F	1.50 "H_2O
$cf^{\Delta} = V_m$		10.125 ✓ cf^{Δ}	73 °F_{avg}	-2.50 "H_2O_{avg}	10.073 ✓ cf^{Δ}	77 ✓ °F_{avg}		1.50 ✓ "H_2O_{avg}

$$\text{Wet Test Meter } VM_{std} = 17.65 \times 10.125 \frac{29.96 + \frac{-2.50}{13.6}}{73 + 460} \times 0.998 \; C_f = 9.964 \text{ scfm}$$

$$\text{Dry Gas Meter } VM_{std} = 17.65 \times 10.073 \frac{29.96 + \frac{1.50}{13.6}}{77 + 460} = 9.956 \text{ scfm}$$

$$\text{Calibration Factor } (C_{dg}) = \frac{\text{Wet Test Meter } VM_{std}}{\text{Dry Gas Meter } VM_{std}} \quad C_{dg} = \frac{9.964}{9.956} = 1.001$$

QA/QC Check
Completeness ✓ Legibility ✓ Accuracy ✓ Specifications ✓ Reasonableness ✓

Checked by: [signature]

10-274B

METCO ENVIRONMENTAL

DRY GAS METER CALIBRATION

Meter Number: T2-4 Wet Test Meter No: 2

Date: 4-19-10 Calibrator: P. Williams

$$\text{Wet Test Meter } VM_{std} = 17.65 \times V_m \frac{P_b + \frac{P_m}{13.6}}{T_m + 460} \times C_f = \_\_\_\_ \text{ scfm}$$

$$\text{Dry Test Meter } VM_{std} = 17.65 \times V_m \frac{P_b + \frac{P_m}{13.6}}{T_m + 460} = \_\_\_\_ \text{ scfm}$$

Run No: 1 @ 2.00 ✓ "H_2O P_b: 29.96 "Hg

Wet Test Meter C_f: 0.998 Control Module Vacuum: 5.0 "Hg

	Wet Test Meter				Dry Gas Meter				
	Time	Meter Reading	T_m	P_m	Mete Reading	T_m Inlet	T_m Outlet	P_m	
End	12:53	10.150	73 °F	-3.10 "H_2O	353.170	82 °F	76 °F	2.00 "H_2O	
Start	0:00	0.000	73 °F	-3.10 "H_2O	343.054	78 °F	75 °F	2.00 "H_2O	
		10.150 ✓ cf$^{\Delta}$	73 °F$_{avg}$	-3.10 "H_2O_{avg}	10.116 ✓ cf$^{\Delta}$	78 ✓ °F$_{avg}$		2.00 ✓ "H_2O_{avg}	

cf$^{\Delta}$ = V_m

$$\text{Wet Test Meter } VM_{std} = 17.65 \times 10.150 \frac{29.96 + \frac{-3.10}{13.6}}{73 + 460} \times 0.998 \; C_f = 9.973 \text{ scfm}$$

$$\text{Dry Gas Meter } VM_{std} = 17.65 \times 10.116 \frac{29.96 + \frac{2.00}{13.6}}{78 + 460} = 9.992 \text{ scfm}$$

$$\text{Calibration Factor } (C_{dg}) = \frac{\text{Wet Test Meter } VM_{std}}{\text{Dry Gas Meter } VM_{std}} \quad C_{dg} = \frac{9.973}{9.992} = 0.998$$

QA/QC Check
Completeness ✓ Legibility ✓ Accuracy ✓ Specifications ✓ Reasonableness ✓

Checked by: [signature]

10-274B

METCO ENVIRONMENTAL

DRY GAS METER CALIBRATION

Meter Number: T2-4 Wet Test Meter No: 2

Date: 4-19-10 Calibrator: R. Williams

$$\text{Wet Test Meter } VM_{std} = 17.65 \times V_m \frac{P_b + \frac{P_m}{13.6}}{T_m + 460} \times C_f = \_\_\_\_ \text{ scfm}$$

$$\text{Dry Test Meter } VM_{std} = 17.65 \times V_m \frac{P_b + \frac{P_m}{13.6}}{T_m + 460} = \_\_\_\_ \text{ scfm}$$

Run No: 1 @ 3.00 ✓ "H_2O P_b: 29.96 "Hg

Wet Test Meter C_f: 0.998 Control Module Vacuum: 5.0 "Hg

	Wet Test Meter				Dry Gas Meter			
	Time	Meter Reading	T_m	P_m	Mete Reading	T_m Inlet	T_m Outlet	P_m
End	10:40	10.150	73 °F	-3.70 "H_2O	363.922	85 °F	77 °F	3.00 "H_2O
Start	0:00	0.000	73 °F	-3.70 "H_2O	353.805	81 °F	76 °F	3.00 "H_2O
		10.150 ✓ cf^{Δ}	73 ✓ °F$_{avg}$	-3.70 ✓ "H_2O_{avg}	10.117 ✓ cf^{Δ}		80 ✓ °F$_{avg}$	3.00 ✓ "H_2O_{avg}

$cf^{\Delta} = V_m$

$$\text{Wet Test Meter } VM_{std} = 17.65 \times 10.150 \frac{29.96 + \frac{-3.70}{13.6}}{73 + 460} \times 0.998 \; C_f = 9.959 \text{ ✓ scfm}$$

$$\text{Dry Gas Meter } VM_{std} = 17.65 \times 10.117 \frac{29.96 + \frac{3.00}{13.6}}{80 + 460} = 9.980 \text{ ✓ scfm}$$

$$\text{Calibration Factor } (C_{dg}) = \frac{\text{Wet Test Meter } VM_{std}}{\text{Dry Gas Meter } VM_{std}} \quad C_{dg} = \frac{9.959}{9.980} = 0.998 \text{ ✓}$$

QA/QC Check

Completeness ✓ Legibility ✓ Accuracy ✓ Specifications ✓ Reasonableness ✓

Checked by: TE ell

10-274B

METCO ENVIRONMENTAL

DRY GAS METER CALIBRATION

Meter Number: T2-4 Wet Test Meter No: 2

Date: 4-19-10 Calibrator: R. Williams

$$\text{Wet Test Meter } VM_{std} = 17.65 \times V_m \frac{P_b + \frac{P_m}{13.6}}{T_m + 460} \times C_f = \_\_\_\_ \text{ scfm}$$

$$\text{Dry Test Meter } VM_{std} = 17.65 \times V_m \frac{P_b + \frac{P_m}{13.6}}{T_m + 460} = \_\_\_\_ \text{ scfm}$$

Run No: 1 @ 4.00 "H_2O P_b: 29.94 "Hg

Wet Test Meter C_f: 0.998 ✓ Control Module Vacuum: 5.0 "Hg

	Wet Test Meter					Dry Gas Meter				
	Time	Meter Reading	T_m	P_m		Mete Reading	T_m Inlet	T_m Outlet	P_m	
End	9:14	10.145	73 °F	-4.7	"H_2O	374.746	87 °F	78 °F	4.00	"H_2O
Start	0:00	0.000	73 °F	-4.7	"H_2O	364.617	82 °F	77 °F	4.00	"H_2O
		10.145 ✓ cf^{Δ}	73 ✓ °F_{avg}	-4.7 ✓	"H_2O_{avg}	10.129 ✓ cf^{Δ}	81 ✓ °F_{avg}		4.00 ✓	"H_2O_{avg}

$cf^{\Delta} = V_m$

$$\text{Wet Test Meter } VM_{std} = 17.65 \times 10.145 \frac{29.94 + \frac{-4.7}{13.6}}{73 + 460} \times 0.998 \; C_f = 9.929 \text{ ✓ scfm}$$

$$\text{Dry Gas Meter } VM_{std} = 17.65 \times 10.129 \frac{29.94 + \frac{4.00}{13.6}}{81 + 460} = 9.998 \text{ ✓ scfm}$$

$$\text{Calibration Factor } (C_{dg}) = \frac{\text{Wet Test Meter } VM_{std}}{\text{Dry Gas Meter } VM_{std}} \quad C_{dg} = \frac{9.929}{9.998} = 0.993 \text{ ✓}$$

QA/QC Check
Completeness ✓ Legibility ✓ Accuracy ✓ Specifications ✓ Reasonableness ✓

Checked by: [signature]

10-274B

STACK UNIT ORIFICE NO: **T2-4** DATE: **01/05/10** CALIBRATED BY: **Ben Goebel** CHECKED BY: **Chris Smith**

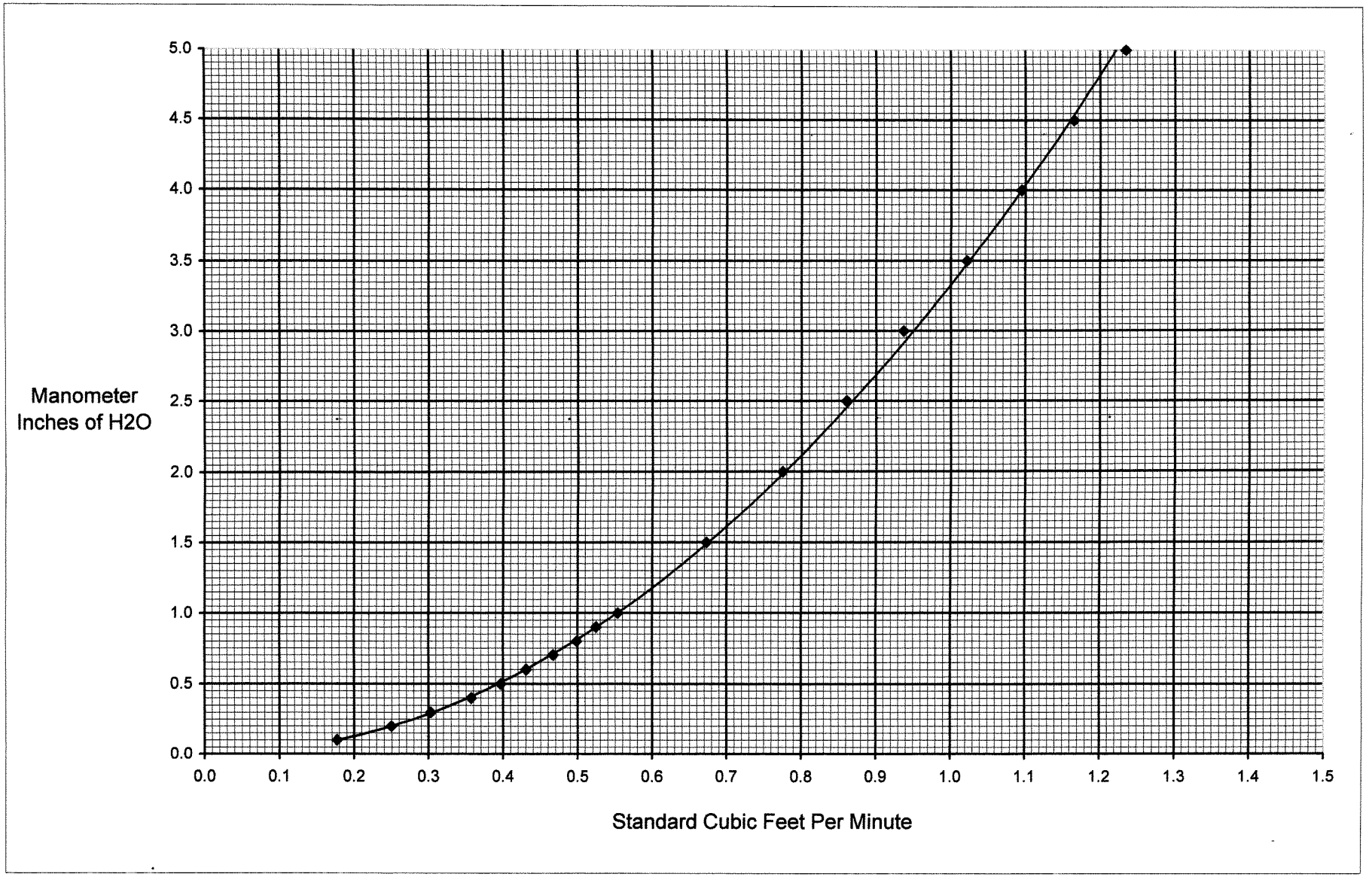

METCO ENVIRONMENTAL

Digital Temperature Indicator No. T2-4

Calibration Data

Date: 4-19-10

Reference Thermometer No. H-09-1

Media	Time	Reference Thermometer (°F)	DTI (°F)
Ambient Air	8:37	71	71 ✓
Ice Bath	8:40	33	33 ✓
Boiling Water	845	211	211 ✓
Oven	851	251	250 ✓
Oven	9:00	300	301 ✓
Oven	912	351	351 ✓
Oven	920	374	374 ✓

Meter Adjusted? YES _____ NO ✓

Calibrator [signature]

Office: Houston

QA/QC Check
Completeness ✓ Legibility ✓ Accuracy ✓ Specifications ✓ Reasonableness ✓

Checked by: [signature]

110-2774B

METCO ENVIRONMENTAL

BAROMETER CALIBRATION

Cherry Hill Office Only

Barometer No. 49-2

Date: 5/24/10

Time: 1645

Barometric Pressure @ **Philadelphia Airport** @ 36 ft	=	30.24
	-	0.036
Absolute Pressure @ **Philadelphia Airport**	=	30.204
	-	0.014
Absolute Pressure @ **METCO Cherry Hill** @ 50 ft.	=	30.19
Barometer Reading	=	30.19
Variation	=	0.00

Barometer Adjusted? Yes ____ No X

Calibrator [signature]

QA/QC Check
Completeness ✓ Legibility ✓ Accuracy ✓ Specifications ✓ Reasonableness ✓

Checked by: [signature]

APPENDIX D

Field Testing Data

METCO ENVIRONMENTAL

Job Number 10-274 | 5.202 Field Data | Ambient Temp. °F 75

Job Name Citgo | Assumed Moisture % 24

Run Number 1 | Read and record at the start of each test point. | Probe Length 10

Unit Wasp FCCU | C Factor 2.103 to reference.

Date 6-30-10 | Purge to: 2045-2145 | Initial Leak @ 15.0 "Hg = 0.020 cfm

Operator Gilbert Bippert | Purge time: 28 LPM | Final Leak @ 6.0 "Hg = 0.000 cfm

Sample box No. 54-2 Meter Box No. 495 | Pitot Leak Check Initial ✓ Final ✓

Point	Clock Time	Dry Gas Meter, CF	"Pitot" "H_2O (ΔP_s)	Orifice ΔH "H_2O Desired	Orifice ΔH "H_2O Actual (P_m)	Pump Vacuum "Hg Gauge	Stack Temp °F (T_s)	Probe Temp °F	Oven Temp °F	Effluent Temp °F	Dry Gas Temp °F Inlet (T_m)	Dry Gas Temp °F Outlet	Remarks
A 6	1908	291.993	0.53	1.10	1.10	2.5	148	330	323	70	85	83	
5	1910.5	293.48	0.51	1.05	1.05	2.5	148	328	324	57	84	83	
4	1913	295.06	0.52	1.10	1.10	2.5	148	326	331	55	85	83	
3	1915.5	296.82	0.49	1.05	1.05	2.5	148	328	329	54	85	83	
2	1918	298.34	0.40	0.84	0.84	2.5	148	327	326	54	85	84	
1	1920.5	299.69	0.43	0.90	0.90	2.5	148	328	325	55	86	84	
End	1923	301.104	—	—	—	—	—	—	—	—	—	—	
B 6	1931	301.104	0.50	1.05	1.05	2.5	148	326	324	64	84	84	
5	1933.5	302.57	0.50	1.05	1.05	2.5	148	324	328	60	84	84	
4	1936	304.13	0.49	1.05	1.05	2.5	148	328	327	56	84	83	
3	1938.5	305.60	0.43	0.90	0.90	2.5	148	326	325	56	83	83	
2	1941	307.10	0.43	0.90	0.90	2.5	148	327	324	56	83	83	
1	1943.5	308.41	0.43	0.90	0.90	2.5	148	328	325	56	83	82	
End	1946	309.560	—	—	—	—	—	—	—	—	—	—	
C 6	1956	309.560	0.50	1.05	1.05	2.5	148	327	326	70	81	81	
5	1958.5	310.91	0.51	1.05	1.05	2.5	148	323	329	59	81	81	
4	2001	312.33	0.51	1.05	1.05	2.5	148	325	326	57	81	81	
3	2003.5	313.86	0.46	0.97	0.97	2.5	148	326	325	57	81	80	

Pitot Tube Calibration Factor C_p 0.810 | Pitot Tube No. T4-E-6 | Barometer No. 49-2 | Probe Tip No. 10-274-TT

Volume Collected V_m 35.344 ft^3 | Baro. Press. P_b 29.66 "Hg | Total Volume of Leak Checks After Start: — ft^3

Water Collected V_w 201.4 ml | Probe Tip Dia. D_n 0.250 in. | V_m = Dry Gas Meter Calibration Factor 1.012 X 34.925

Time of Test T_t 60 min. | % CO_2 14.3 | % CO 0.0

Stack Pressure P_s −0.32 "H_2O | % O_2 4.2 | % N_2 81.5 | {Dry Gas Meter Reading — ft^3 – (T_t — min. X Leak Rate — cfm)}

Area Stack A_s 22.167 in^2

VERSION 1
22 OCTOBER 2002

D-2

10-274B

LM-2010-031130

Impinger Box No. 54-2

Water Weight Gain

Impinger 1	Final Weight	950.4		Impinger 1	196.8
	Initial Weight	753.6			
	Increase			Impinger 2	-2.8
Impinger 2	Final Weight	735.8		Impinger 3	3.5
	Initial Weight	738.6			
	Increase			Impinger 4	3.9
			V_w =		
Impinger 3	Final Weight	654.4	g SO_2 = -	Impinger 5	
	Initial Weight	650.9	V_w =		
	Increase			Impinger 6	
Impinger 4	Final Weight	963.0		Impinger 7	
	Initial Weight	959.1			
	Increase			Total	201.4 ✓ = V_w
Impinger 5	Final Weight		P_b = 29.66 ✓	$\%CO_2$ = 14.3 ✓	6.292
	Initial Weight		V_m = 35.344 ✓	$\%O_2$ = 4.2 ✓	1.344
	Increase		V_w = 201.4 ✓	%CO = ~~14.3~~ 00 ✓	
			P_m = 0.980 ✓	$\%N_2$ = 81.5 ✓	22.82
Impinger 6	Final Weight		Avg ΔP = 0.466 ✓	A_s = 22,167 ✓	
	Initial Weight			D_n = 0.250 ✓	
	Increase		Avg$\sqrt{\Delta P}$ = 0.682 ✓	T_t = 60 ✓	
			C_p = 0.810 ✓		
Impinger 7	Final Weight		P_s = -0.32 "H_2O ✓	29.64 ✓ "Hg	
	Initial Weight		T_m = 81 ✓ °F	541 ✓ °R	
	Increase		T_s = 148 ✓ °F	608 ✓ °R	

Moisture Content: %M = 21.71 ✓ 0.2171 M_d = 0.7829 ✓ MW_d = 30.456 ✓ MW = 27.75 ✓

$$Vm_{std} = 17.65\ Vm \left[\frac{P_b + \frac{P_m}{13.6}}{T_m + 460}\right] = 17.65 \times 35.344 \left[\frac{29.66 + \frac{0.980}{13.6}}{81 + 460}\right] = 34.284 \checkmark \text{ sft}^3 \quad 0.571 \text{ scfm}$$

Vw_{gas} = 0.0472 x Vw = 0.0472 x 201.4 = 9.506 ✓ sft^3

$$\% \text{ Moisture} = \frac{Vw_{gas}}{Vm_{std} + Vw_{gas}} \times 100 = \frac{9.506}{9.506 + 34.284} \times 100 = 21.71 \checkmark \%$$

$$V_s = 5123.8 \times 0.810 \sqrt{\frac{608}{27.75 \times 29.64}} \times 0.682 = 2434 \checkmark \text{ fpm}$$

ACFM: TE ~~374615~~ 374,617

$$\%I = \frac{1{,}039 \times 34.284 \times 608}{0.7829 \times 60 \times 29.64 \times 2434 \times (0.25)^2} = 102.2 \% \checkmark$$

SCFM: 253287 ✓

%EA: 24.1

Run Number 1 5.202 **FIELD DATA**

Unit Weep FCCU

Date 6-30-10

Point	Clock Time	Dry Gas Meter, CF	ΔP_s "Pitot" "H_2O	Orifice ΔH "H_2O Desired	P_m Orifice ΔH "H_2O Actual	Pump Vacuum "Hg Gauge	T_s Stack Temp °F	Probe Temp °F	Oven Temp °F	Effluent Temp °F	T_m Dry Gas Temp °F Inlet	Dry Gas Temp °F Outlet	Remarks
2	2006	315.35	0.39	0.82	0.82	2.5	~~326~~ 148	326	323	58	80	81	
1	2008.5	316.73	0.38	0.80	0.80	2.5	148	325	327	58	79	80	
End	2011	318.100	–	–	–	–	–	–	–	–	–	–	
D 6	2019	318.100	0.49	1.05	1.05	3.0	148	328	323	68	74	76	
5	2021.5	319.92	0.49	1.05	1.05	3.0	148	325	328	62	74	75	
4	2024	321.14	0.47	0.99	0.99	3.0	148	325	327	60	74	75	
3	2026.5	322.57	0.49	1.05	1.05	3.0	148	326	328	59	75	74	
2	2029	324.07	0.42	0.88	0.88	3.0	148	327	329	58	75	74	
1	2031.5	325.54	0.41	0.86	0.86	3.0	148	328	326	59	76	74	
End	2034	326.918	–	–	–	–	–	–	–	–	–	–	

Version 1
22 OCTOBER 2002

METCO ENVIRONMENTAL

Job Number 10-274
Job Name Citgo
Run Number 2
Unit Wasp FCCU
Date 7-1-10
Operator Gilbert Morris
Sample box No. 54-2 Meter Box No. 49-5

5.202 Field Data

Read and record at the start of each test point.

Purge to: 1422
Purge time: 1522
Pitot Leak Check Initial ✓ Final ✓

Ambient Temp. °F 76
Assumed Moisture % 25
Probe Length 10
C Factor 2.103 to reference.
Initial Leak @ 17.5 "Hg = 0.003 cfm
Final Leak @ 6.0 "Hg = 0.010 cfm
Pitot Tips Damaged During Test? Yes (No)

Point	Clock Time	Dry Gas Meter, CF	ΔP_s "Pitot" "H_2O	Orifice ΔH "H_2O Desired	P_m Orifice ΔH "H_2O Actual	Pump Vacuum "Hg Gauge	T_s Stack Temp °F	Probe Temp °F	Oven Temp °F	Effluent Temp °F	T_m Dry Gas Temp °F Inlet	Dry Gas Temp °F Outlet	Remarks
A6	1208	327.725	0.50	1.05	1.05	3.0	146	327	326	75	84	85	
5	1210.5	329.21	0.50	1.05	1.05	3.0	147	326	325	68	84	84	
4	1213	330.69	0.47	0.99	0.99	3.0	147	328	327	64	84	84	
3	1215.5	332.16	0.47	0.99	0.99	3.0	147	327	326	63	84	85	
2	1218	333.62	0.43	0.90	0.90	2.5	147	325	327	62	85	85	
1	1220.5	335.00	0.43	0.90	0.90	2.5	147	326	329	61	85	85	
End	1223	336.432	–	–	–	–	–	–	–	–	–	–	
B6	1237	336.432	0.50	1.05	1.05	3.0	147	328	327	74	84	85	
5	1239.5	338.09	0.46	0.97	0.97	3.0	147	326	325	64	83	85	
4	1242	339.30	0.46	0.97	0.97	3.0	147	328	326	62	83	85	
3	1244.5	340.50	0.46	0.97	0.97	3.0	147	327	325	60	83	85	
2	1247	341.96	0.46	0.97	0.97	3.0	147	326	326	59	82	86	
1	1249.5	343.32	0.46	0.97	0.97	3.0	147	328	327	59	82	86	
End	1252	344.444	–	–	–	–	–	–	–	–	–	–	
C6	1303	344.444	0.49	1.05	1.05	3.0	147	327	326	74	85	86	
5	1305.5	345.75	0.48	1.00	1.00	3.0	147	328	325	65	85	86	
4	1308	347.20	0.45	0.95	0.95	3.0	147	327	326	61	86	86	
3	1310.5	348.52	0.45	0.95	0.95	3.0	147	326	328	61	87	86	

8.707

8.058

Pitot Tube Calibration Factor C_p ~~0.825~~ 0.810 KG
Volume Collected V_m 33.751 ft^3
Water Collected V_w 216.3 ml
Time of Test T_t 60 min.
Stack Pressure P_s -0.32 "H_2O

Pitot Tube No. T4-ESK-6
Baro. Press. B_{bar} 29.94 "Hg
Probe Tip Dia. D_n 0.250 in.
% CO_2 14.4 % CO 00
% O_2 3.6 % N_2 82.0

Barometer No. 49-2 Probe Tip No. 10-274 II
Total Volume of Leak Checks After Start: — ft^3
V_m = Dry Gas Meter Calibration Factor 1.012 X 33.351
Area Stack A_s 22.167 in^2
{Dry Gas Meter Reading — ft^3 – (T_t — min. X Leak Rate — cfm)}

QA/QC Check
Completeness ✓ Legibility ✓ Accuracy ✓ Specifications ✓ Reasonableness ✓ Checked by: [signature]

Version 2
1 February 2008

D-5

10-274B

LM-2010-031133

Impinger Box No. 54-2 9028

Impinger 1	Final Weight	~~806.2~~ JC	**Water Weight Gain**	Impinger 1	182.4
	Initial Weight	720.4			
	Increase			Impinger 2	24.3
Impinger 2	Final Weight	788.6		Impinger 3	2.5
	Initial Weight	764.3			
	Increase			Impinger 4	7.1
Impinger 3	Final Weight	655.8	V_w =	Impinger 5	
	Initial Weight	653.3	g SO_2 = -		
	Increase		V_w =	Impinger 6	
Impinger 4	Final Weight	1014.4		Impinger 7	
	Initial Weight	1007.3			
	Increase			Total	216.3 = V_w

Impinger 5	Final Weight		P_b =	29.94	%CO_2 =	14.4	6.336
	Initial Weight		V_m =	33.751	%O_2 =	3.6	1.152
	Increase		V_w =	216.3	%CO =	0.0	
			P_m =	0.982	%N_2 =	82.0	22.96
Impinger 6	Final Weight		Avg ΔP =	0.466	A_n =	22.167	
	Initial Weight				D_n =	0.250	
	Increase		Avg$\sqrt{\Delta P}$ =	0.683	T_1 =	60	
			C_p =	~~0.825~~ 0.810 KG			
Impinger 7	Final Weight		P_s =	-0.32 °H_2O		29.92 °Hg	
	Initial Weight		T_m =	85 °F		545 °R	
	Increase		T_s =	147 °F		607 °R	

Moisture Content: %M = 23.73 M_d = 0.7627 MW_d = 30.448 MW = 27.49

$$Vm_{std} = 17.65\ Vm \left[\frac{P_b + \frac{P_m}{13.6}}{T_m + 460}\right] = 17.65 \times 33.751 \left[\frac{29.94 + \frac{0.982}{13.6}}{85 + 460}\right] = 32.804\ \text{sft}^3 = 0.547\ \text{scfm}$$

Vw_{gas} = 0.0472 x Vw = 0.0472 x 216.3 = 10.209 sft^3

$$\%\ \text{Moisture} = \frac{Vw_{gas}}{Vm_{std} + Vw_{gas}} \times 100 = \frac{10.209}{10.209 + 32.804} \times 100 = 23.73\ \%$$

$$V_s = 5123.8 \times \cancel{0.825}\ 0.810 \sqrt{\frac{607}{27.49 \times 29.92}} \times 0.683 = \cancel{2480}\ 2435\ \text{KG fpm}$$

ACFM: ~~381,801~~ 374,859 KG

$$\%I = \frac{1,039 \times 32.804 \times 607}{\cancel{2480}\ 2435 \times 0.7627 \times 60 \times 29.92 \times (0.250)^2} = \cancel{95}\ \cancel{975}\ \text{KG}\ \%$$

99.3%

SCFM: ~~254,209~~ 249,596 KG

%EA: 19.9

VERSION 1
22 OCTOBER 2002

Run Number 2 5.202 **FIELD DATA**

Unit Wasp FCCU

Date 7-1-10

Point	Clock Time	Dry Gas Meter, CF	ΔP_s "Pitot" "H_2O	Orifice ΔH "H_2O Desired	P_m Orifice ΔH "H_2O Actual	Pump Vacuum "Hg Gauge	T_s Stack Temp °F	Probe Temp °F	Oven Temp °F	Effluent Temp °F	T_m Dry Gas Temp °F Inlet	Dry Gas Temp °F Outlet	Remarks
2	1313	349.92	0.45	0.95	0.95	3.0	147	327	328	61	87	86	
1	1315.5	351.32	0.46	0.97	0.97	3.0	147	328	327	60	90	87	
End	1318	352.662	–	–	–	–	–	–	–	–	–	–	
D6	1331	352.662	0.47	0.99	0.99	3.0	147	327	326	77	88	87	
5	1333.5	353.87	0.47	0.99	0.99	3.0	147	329	327	62	85	87	
4	1336	355.33	0.46	0.97	0.97	3.0	147	327	326	56	85	86	
3	1338.5	356.87	0.47	0.99	0.99	3.0	147	328	327	54	87	86	
2	1341	358.29	0.47	0.99	0.99	3.0	147	329	326	55	87	87	
1	1343.5	359.32	0.47	0.99	0.99	3.0	147	326	327	54	88	87	
End	1346	361.076	–	–	–	–	–	–	–	–	–	–	

Version 1
22 OCTOBER 2002

10-274B

LM-2010-031135

METCO ENVIRONMENTAL

Job Number 10-274
Job Name Citgo
Run Number 3
Unit Wasp FCCU
Date 7-1-10
Operator Gilbert Morris
Sample box No. 54-4 Meter Box No. 49-5

5B/202 Field Data

Read and record at the start of each test point.

Purge to: 1705
Purge time: 1805
Pitot Leak Check Initial ✓ Final ✓

Ambient Temp. °F 80
Assumed Moisture % 2.54 JF
Probe Length 10
C Factor 2.103 to reference.
Initial Leak @ 16.5 "Hg = 0.000 cfm
Final Leak @ 8.0 "Hg = 0.000 cfm
Pitot Tips Damaged During Test? Yes (No)

Point	Clock Time	Dry Gas Meter, CF	ΔP_s "Pitot" "H_2O	Orifice ΔH "H_2O Desired	P_m Orifice ΔH "H_2O Actual	Pump Vacuum "Hg Gauge	T_s Stack Temp °F	Probe Temp °F	Oven Temp °F	Effluent Temp °F	T_m Dry Gas Temp °F Inlet	Dry Gas Temp °F Outlet	Remarks
AC	1500	361.790	0.45	0.95	0.95	4.0	147	326	327	79	88	88	
5	1502.5	363.03	0.45	0.95	0.95	4.0	147	325	328	74	88	88	
4	1505	364.44	0.45	0.95	0.95	4.0	147	326	329	68	87	88	
3	1507.5	365.81	0.46	0.97	0.97	4.0	147	325	326	64	88	87	
2	1510	367.32	0.46	0.97	0.97	4.0	147	324	327	63	89	87	
1	1512.5	368.71	0.46	0.97	0.97	4.0	147	326	327	62	89	88	
End	1515	370.042	—	—	—	—	—	—	—	—	—	—	
B6	1522	370.042	0.47	0.99	0.99	4.0	146	327	328	76	89	88	
5	1524.5	371.34	0.47	0.99	0.99	4.0	146	328	326	66	89	88	
4	1527	372.73	0.47	0.99	0.99	4.0	146	327	325	61	90	88	
3	1529.5	374.15	0.48	1.00	1.00	4.0	147	326	328	59	90	88	
2	1532	375.63	0.48	1.00	1.00	4.0	147	327	326	58	90	88	
1	1534.5	376.99	0.46	0.97	0.97	4.0	147	327	325	59	91	88	
End	1537	378.474	—	—	—	—	—	—	—	—	—	—	
C6	1555	378.474	0.46	0.97	0.97	4.5	146	328	326	73	90	88	
5	1557.5	379.90	0.47	0.99	0.99	4.5	147	326	327	64	91	89	
4	1600	381.31	0.47	0.99	0.99	4.5	147	327	326	62	91	90	
3	1602.5	382.64	0.44	0.93	0.93	4.5	147	326	322	61	90	89	

8.252

8.4

Pitot Tube Calibration Factor C_p 0.810
Volume Collected V_m 33.542 ft^3
Water Collected V_w 211.3 ml
Time of Test T_t 60 min.
Stack Pressure P_s -0.34 "H_2O

Pitot Tube No. 74-Esco6
Baro. Press. P_b 29.92 "Hg
Probe Tip Dia. D_n 0.250 in.
% CO_2 14.5 % CO 0.0
% O_2 3.7 % N_2 81.8

Barometer No. 49-2 Probe Tip No. 10-274-II
Total Volume of Leak Checks After Start: — ft^3
V_m = Dry Gas Meter Calibration Factor 1.012 X 33.144
Area Stack A_s 22.167 in^2
{Dry Gas Meter Reading — ft^3 – (T_t — min. X Leak Rate — cfm)}

QA/QC Check
Completeness ✓ Legibility ✓ Accuracy ✓ Specifications ✓ Reasonableness ✓ Checked by:

Version 2
1 February 2008

D-8

10-274B

LM-2010-031136

Impinger Box No. 54-4

Water Weight Gain

Impinger 1	Final Weight	897.5		Impinger 1	194.7
	Initial Weight	702.8			
	Increase			Impinger 2	2.7
Impinger 2	Final Weight	753.4		Impinger 3	4.2
	Initial Weight	750.7			
	Increase			Impinger 4	9.7
			V_w =		
Impinger 3	Final Weight	735.3	g SO_2 = -	Impinger 5	
	Initial Weight	731.1	V_w =		
	Increase			Impinger 6	
Impinger 4	Final Weight	968.8		Impinger 7	
	Initial Weight	959.1			
	Increase			Total	211.3 = V_w

Impinger 5	Final Weight		P_b =	29.92	%CO_2 =	14.5	
	Initial Weight		V_m =	33.542	%O_2 =	3.7	
	Increase		V_w =	211.3	%CO =	0.0	
			P_m =	0.979	%N_2 =	81.8	
Impinger 6	Final Weight		Avg ΔP =	~~0.465~~ 0.466	A_n =	22.167	
	Initial Weight				D_n =	0.250	
	Increase		Avg$\sqrt{\Delta P}$ =	0.682	T_s =	60	
			C_p =	0.810			
Impinger 7	Final Weight		P_s =	-0.34 "H_2O		29.90	"Hg
	Initial Weight		T_m =	89 °F		549	°R
	Increase		T_s =	147 °F		607	°R

Moisture Content: %M = 23.57 M_d = 0.7643 MW_d = 30.465 MW = ~~29.2~~ 27.53

$$Vm_{std} = 17.65\ Vm \left[\frac{P_b + \frac{P_m}{13.6}}{T_m + 460}\right] = 17.65 \times 33.542 \left[\frac{29.92 + \frac{0.979}{13.6}}{89 + 460}\right] = 32.342\ \text{sft}^3 \quad 0.539\ \text{scfm}$$

Vw_{gas} = 0.0472 x Vw = 0.0472 x 211.3 = 9.973 sft^3

% Moisture = $\frac{Vw_{gas}}{Vm_{std} + Vw_{gas}}$ x 100 = $\frac{9.973}{9.973 + 32.342}$ x 100 = 23.57 %

V_s = 5123.8 x 0.810 $\sqrt{\frac{607}{29.90 \times 27.53}}$ x 0.682 = 2431 fpm

ACFM: 374,164

SCFM: 249,592

%I = $\frac{1{,}039 \times 32.342 \times 607}{2431 \times 0.7643 \times 29.90 \times 60 \times (0.250)^2}$ = 97.9 %

%EA: 20.6

VERSION 1
22 OCTOBER 2002

Run Number 3 5.202 **FIELD DATA**

Unit Wasp FCCU

Date 7-1-10

Point	Clock Time	Dry Gas Meter, CF	ΔP_s "Pitot" "H_2O	Orifice ΔH "H_2O Desired	P_m Orifice ΔH "H_2O Actual	Pump Vacuum "Hg Gauge	T_s Stack Temp °F	Probe Temp °F	Oven Temp °F	Effluent Temp °F	T_m Dry Gas Temp °F Inlet	Dry Gas Temp °F Outlet	Remarks
2	1605	384.02	0.44	0.93	0.93	4.5	147	325	328	61	91	89	
1	1607.5	385.23	0.43	0.90	0.90	4.5	147	326	327	61	89	88	
End	1610	386.525	–	–	–	–	–	–	–	–	–	–	
D6	1621	386.525	0.50	1.05	1.05	5.0	149	325	327	73	88	86	
5	1623.5	388.04	0.50	1.05	1.05	5.0	149	326	328	63	89	87	
4	1626	389.42	0.50	1.05	1.05	5.0	150	326	329	60	90	88	
3	1628.5	390.73	0.50	1.05	1.05	5.5	150	327	326	59	92	88	
2	1631	392.14	0.52	1.10	1.10	6.0	150	327	324	59	92	90	
1	1633.5	393.72	0.37	0.78	0.78	6.0	149	328	325	61	91	90	
End	1636	394.934	–	–	–	–	–	–	–	–	–	–	

Version 1
22 OCTOBER 2002

METCO ENVIRONMENTAL

Job Number: 10-274
Job Name: Citgo
Run Number: 1
Unit: West ECCU
Date: 6/10/10
Operator: Starkey/Morris/Adam
Sample box No. 7 Meter Box No. T2-4

OTM 28 Field Data

Read and record at the start of each test point.

Purge to: 2045-2145
Purge time: 20 LPM
Pitot Leak Check Initial ✓ Final ✓

Ambient Temp. °F 75
Assumed Moisture % ~~24~~ 12
Probe Length 10'
C Factor 2.1028 to reference.
Initial Leak @ 16.0 "Hg = 0.002 cfm
Final Leak @ 18.0 "Hg = 0.001 cfm

Point	Clock Time	Dry Gas Meter, CF	ΔP_s "Pitot" "H_2O	Orifice ΔH "H_2O Desired	P_m Orifice ΔH "H_2O Actual	Pump Vacuum "Hg Gauge	T_s Stack Temp °F	Probe Temp °F	Oven Temp °F	Effluent Temp °F	T_m Dry Gas Temp °F Inlet	Dry Gas Temp °F Outlet	Remarks
D6	1908	208.927	0.45	0.95	0.95	4.0	149	326	328	73	86	86	325°F ± 25°F
5	1910.5	210.23	0.50	1.05	1.05	4.0	149	326	320	73	86	86	
4	1913	211.80	0.53	1.10	1.10	4.5	149	328	324	61	85	86	
3	1915.5	213.25	0.36	0.76	0.76	4.0	149	328	326	62	85	86	
2	1918	214.55	0.36	0.76	0.76	4.0	149	328	326	62	85	86	
1	1920.5	215.59	0.30	0.63	0.63	3.5	149	328	329	62	85	86	
END	1923	216.573	–	–	–	–	–	–	–	–	–	–	
C6	1931	216.573	0.47	0.99	0.99	4.0	149	324	328	62	86	86	
5	1933.5	217.95	0.49	1.00	1.00	4.5	150	326	328	63	86	85	
4	1936	219.13	0.48	1.00	1.00	4.5	150	328	328	64	85	84	
3	1938.5	220.65	0.46	0.97	0.97	4.0	150	326	329	64	85	84	
2	1941	222.14	0.32	0.67	0.67	3.5	150	326	329	63	86	84	
1	1943.5	223.21	0.30	0.63	0.63	3.5	150	323	328	63	86	85	
END	1946	224.357	–	–	–	–	–	–	–	–	–	–	
B6	1956	224.357	0.48	1.00	1.00	4.5	149	324	328	65	81	84	
5	1958.5	225.87	0.48	1.00	1.00	4.5	149	326	324	52	81	81	
4	2001	227.00	0.47	0.99	0.99	4.5	149	326	327	52	81	81	
3	2003.5	228.47	0.40	0.84	0.84	4.0	149	327	328	53	81	81	

Pitot Tube Calibration Factor C_p 0.820
Volume Collected V_m ~~31.940~~ 31.863 ft^3
Water Collected V_w 210 ml
Time of Test T_t 60 min.
Stack Pressure P_s -0.32 "H_2O

Pitot Tube No. T4-E-8
Baro. Press. P_b 29.66 "Hg
Probe Tip Dia. D_n 0.250 in.
% CO_2 14.3 % CO 0.0
% O_2 4.2 % N_2 81.5
Area Stack A_s 22167 in^2

Barometer No. 49-2 Probe Tip No. 10-274-I
Total Volume of Leak Checks After Start: – ft^3
V_m = Dry Gas Meter Calibration Factor ~~1.004~~ 1.000 x 31.863

{Dry Gas Meter Reading – ft^3 – (T_t – min. X Leak Rate – cfm)}

VERSION 1
22 OCTOBER 2002

Impinger Box No. 7

Impinger 1	Final Weight	~~737.5~~ 811.1	
	Initial Weight	613.2	
	Increase		
Impinger 2	Final Weight	668.0	
	Initial Weight	666.4	
	Increase		
Impinger 3	Final Weight	737.5	
	Initial Weight	738.4	
	Increase		
Impinger 4	Final Weight	938.8	
	Initial Weight	927.4	
	Increase		
Impinger 5	Final Weight		
	Initial Weight		
	Increase		
Impinger 6	Final Weight		
	Initial Weight		
	Increase		
Impinger 7	Final Weight		
	Initial Weight		
	Increase		

Water Weight Gain

Impinger 1	197.9
Impinger 2	1.6
Impinger 3	-0.9
Impinger 4	11.4
Impinger 5	
Impinger 6	
Impinger 7	
Total	210 ✓ = V_w

V_w =
g SO_2 = -
V_w =

P_b = 29.66 ✓
V_m = TF ~~31.990~~ 31.863 ✓
V_w = 210 ✓
P_m = 0.881 ✓
Avg ΔP = 0.420 ✓
Avg $\sqrt{\Delta P}$ = 0.646 ✓
C_p = 0.820 ✓
P_s = -0.32 "H_2O ✓
T_m = 82 ✓ °F
T_s = 149 ✓ °F

%CO_2 = 14.3 ✓
%O_2 = 4.2 ✓
%CO = 0.0 ✓
%N_2 = 81.5 ✓
A_s = 22167 ✓
D_n = 0.250 ✓
T_t = 60 ✓

29.64 ✓ "Hg
542 ✓ °R
609 ✓ °R

Moisture Content:

%M = ~~24.25~~ TF 24.32 ✓ M_d = TF ~~0.7575~~ 0.7568 ✓ MW_d = ~~31.21~~ ~~29.25~~ ~~30.45~~ 30.46 ✓ MW = ~~27.438~~ ~~27.44~~ TF 27.4

$$Vm_{std} = 17.65\ Vm \left[\frac{P_b + \frac{P_m}{13.6}}{T_m + 460}\right] = 17.65 \times \text{~~31.990~~ TF 31.863} \left[\frac{29.66 + \frac{0.881}{13.6}}{82 + 460}\right] = \text{~~30.966~~ TF 30.843 sft}^3 \text{ ✓}$$

$$\text{~~0.516~~ TF 0.514 scfm ✓}$$

Vw_{gas} = 0.0472 x Vw = 0.0472 x 210 = 9.912 ✓ sft^3

$$\%\ \text{Moisture} = \frac{Vw_{gas}}{Vm_{std} + Vw_{gas}} \times 100 = \frac{9.912}{9.912 \text{ TF} + \text{~~30.966~~ 30.843}} \times 100 = \text{~~24.25~~ TF 24.32 \%} \text{ ✓}$$

$$V_s = 5123.8 \times 0.820 \sqrt{\frac{609}{29.64 \times \text{~~27.44~~ TF 27.43}}} \times 0.646 = 2349 \text{ fpm}$$

$$\%I = \frac{1{,}039 \times \text{~~30.966~~ TF 30.843} \times 609}{29.64 \times \text{~~0.7575~~ 0.7568} \times 60 \times 2349 \times (0.250)^2} = \text{~~99.1~~ TF 98.8 \%} \text{ ✓}$$

ACFM: ~~361543~~ TF 361,609 ✓

SCFM: ~~236123~~ TF 235,905

%EA: 24.1

Run Number 1

Unit West FCCU

Date 6/30/10

OTM 28 FIELD DATA

Point	Clock Time	Dry Gas Meter, CF	ΔP_s "Pitot" "H_2O	Orifice ΔH "H_2O Desired	P_m Orifice ΔH "H_2O Actual	Pump Vacuum "Hg Gauge	T_s Stack Temp °F	Probe Temp °F	Oven Temp °F	Effluent Temp °F	T_m Dry Gas Temp °F Inlet	Dry Gas Temp °F Outlet	Remarks
B 2	2006	229.73	0.38	0.80	0.80	4.0	149	326	328	59	79	80	
1	2008.5	230.92	0.30	0.63	0.63	3.5	149	322	325	60	79	80	
END	2011	232.147	—	—	—	—	—	—	—	—	—	—	
A1	2019	232.147	0.49	1.05	1.05	4.5	149	327	328	60	75	75	
5	2021.5	233.51	0.48	1.00	1.00	4.5	149	322	327	56	75	75	
4	2024	234.94	0.46	0.97	0.97	4.5	149	325	325	49	75	75	
3	2026.5	236.52	0.38	0.80	0.80	4.0	148	326	329	48	76	75	
2	2029	238.00	0.38	0.80	0.86	4.0	148	327	328	48	76	75	
1	2031.5	239.14	0.36	0.76	0.76	4.5	148	328	328	49	77	75	
END	2034	240.790	—	—	—	—	—	—	—	—	—	—	

Version 1
22 OCTOBER 2002

METCO ENVIRONMENTAL

Job Number 10-274
Job Name Ctgo
Run Number 2
Unit West FCCU
Date 7/1/10
Operator Starkey/Morris/Cutaia
Sample box No. 7 Meter Box No. I2-4

OTM 28 Field Data

Read and record at the start of each test point.

Purge to: 1422
Purge time: 1522
Pitot Leak Check Initial ✓ Final ✓

Ambient Temp. °F 76
Assumed Moisture % ~~24.00~~
Probe Length 10
C Factor 2.1028 to reference.
Initial Leak @ 16.0 "Hg = 0.005 cfm
Final Leak @ 8.0 "Hg = 0.005 cfm
Pitot Tips Damaged During Test? Yes (No)

Point	Clock Time	Dry Gas Meter, CF	ΔP_s "Pitot" "H_2O	Orifice ΔH "H_2O Desired	P_m Orifice ΔH "H_2O Actual	Pump Vacuum "Hg Gauge	T_s Stack Temp °F	Probe Temp °F	Oven Temp °F	Effluent Temp °F	T_m Dry Gas Temp °F Inlet	Dry Gas Temp °F Outlet	Remarks
D6	1208	241.396	0.50	1.05	1.05	4.5	148	322	328	67	86	85	
5	1210.5	243.10	0.50	1.05	1.05	4.5	148	328	322	60	86	85	
4	1213	244.47	0.48	1.00	1.00	4.5	148	321	326	60	84	85	
3	1215.5	245.75	0.46	0.97	0.97	4.0	148	323	327	59	84	85	
2	1218	247.81	0.32	0.67	0.67	4.0	148	324	328	59	84	85	
1	1220.5	248.31	0.32	0.67	0.67	4.0	148	329	320	60	84	85	
END	1223	249.578	–	–	–	–	–	–	–	–	–	–	
C6	1237	249.578	0.50	1.05	1.05	4.5	148	332	324	61	89	86	
5	1239.5	250.88	0.49	1.00	1.00	4.5	148	326	334	61	89	85	
4	1242	252.02	0.48	1.00	1.00	4.5	148	326	334	61	87	85	
3	1244.5	253.39	0.47	0.99	0.99	5.0	148	326	336	62	87	85	
2	1247	254.92	0.32	0.67	0.67	4.0	148	328	338	62	88	85	
1	1249.5	256.14	0.32	0.67	0.67	4.0	148	328	326	60	88	86	
END	1252	257.427	–	–	–	–	–	–	–	–	–	–	
B6	1303	257.427	0.52	1.10	1.10	5.0	148	328	326	61	87	86	
5	1305.5	259.04	0.50	1.05	1.05	4.5	148	327	329	61	88	86	
4	1308	260.35	0.46	0.97	0.97	4.5	148	327	322	60	88	86	
3	1310.5	261.55	0.46	0.97	0.97	4.5	147	328	323	58	87	86	

Pitot Tube Calibration Factor C_p ~~0.825~~ 0.820 KG
Volume Collected V_m ~~32.042~~ 31.914 ft^3
Water Collected V_w 200.9 ml
Time of Test T_t 60 min.
Stack Pressure P_s – 0.32 "H_2O

Pitot Tube No. T4-E Sc-8
Baro. Press. P_{bar} 29.94 "Hg
Probe Tip Dia. D_n 0.250 in.
% CO_2 14.4 % CO 0.0
% O_2 3.6 % N_2 82.0

Barometer No. 49-2 Probe Tip No. 10-274-I
Total Volume of Leak Checks After Start: – ft^3
V_m = Dry Gas Meter Calibration Factor ~~1.004~~ 1.000 X 31.914
Area Stack A_s 22167 in^2
{Dry Gas Meter Reading – ft^3 – (T_t – min. X Leak Rate – cfm)}

QA/QC Check
Completeness ✓ Legibility ✓ Accuracy ✓ Specifications ✓ Reasonableness ✓ Checked by:

Version 2
1 February 2008

Impinger Box No. 7

Water Weight Gain

Impinger 1	Final Weight	805.2		Impinger 1	191.9
	Initial Weight	613.3			
	Increase			Impinger 2	-0.4
Impinger 2	Final Weight	667.9		Impinger 3	-0.4
	Initial Weight	668.3			
	Increase			Impinger 4	9.8
Impinger 3	Final Weight	736.1	V_w =	Impinger 5	
	Initial Weight	736.5	g SO_2 = -		
	Increase		V_w =	Impinger 6	
Impinger 4	Final Weight	964.0		Impinger 7	
	Initial Weight	954.2			
	Increase			Total	200.9 = V_w

Impinger 5	Final Weight		P_b = 29.94	$\%CO_2$ = 14.4	
	Initial Weight		V_m = TF ~~32.012~~ 31.914	$\%O_2$ = 3.6	
	Increase		V_w = 200.9	%CO = 0.0	
			P_m = TF ~~0.904~~ 0.905	$\%N_2$ = 82.0	
Impinger 6	Final Weight		Avg ΔP = 0.431	A_n = 22.167	
	Initial Weight			D_n = 0.250	
	Increase		Avg$\sqrt{\Delta P}$ = 0.653	T_t = 60	
			C_p = 0.820		
Impinger 7	Final Weight		P_s = -0.32 "H_2O	29.92 "Hg	
	Initial Weight		T_m = TF ~~88~~ 86 °F	TF ~~548~~ 546 °R	
	Increase		T_s = 148 °F	608 °R	

Moisture Content: %M = ~~23.44~~ 23.45 TF M_d = ~~0.7656~~ 0.7655 TF MW_d = 30.448 MW = 27.53

$$Vm_{std} = 17.65\ Vm \left[\frac{P_b + \frac{P_m}{13.6}}{T_m + 460}\right] = 17.65 \times \text{TF } \cancel{32.012}\ 31.914 \left[\frac{29.94 + \frac{\text{TF } \cancel{0.904}\ 0.905}{13.6}}{\cancel{88}\ 86 + 460}\right] = \text{TF } \cancel{30.967}\ 30.956\ \text{sft}^3 = 0.516\ \text{scfm}$$

Vw_{gas} = 0.0472 x Vw = 0.0472 x 200.9 = 9.482 sft^3

$$\%\ \text{Moisture} = \frac{Vw_{gas}}{Vm_{std} + Vw_{gas}} \times 100 = \frac{9.482}{30.956\ \text{TF } \cancel{30.967} + 9.482} \times 100 = \text{TF } \cancel{23.44}\ 23.45\ \%$$

$$V_s = 5123.8 \times 0.820 \sqrt{\frac{608}{27.53 \times 29.92}} \times 0.653 = 2357\ \text{fpm}$$

ACFM: 362,854

SCFM: TF ~~242,120~~ 242,089

$$\%I = \frac{1{,}039 \times 30.967 \times 608}{2357 \times 0.7657 \times 60 \times 29.92 \times (0.250)^2} = 96.6\ \%$$

%EA: 19.9

VERSION 1
22 OCTOBER 2002

Run Number 2 OTM 28 FIELD DATA

Unit West FCCU

Date 7/1/10

Point	Clock Time	Dry Gas Meter, CF	ΔP_s "Pitot" "H_2O	Orifice ΔH "H_2O Desired	P_m Orifice ΔH "H_2O Actual	Pump Vacuum "Hg Gauge	T_s Stack Temp °F	Probe Temp °F	Oven Temp °F	Effluent Temp °F	T_m Dry Gas Temp °F Inlet	Dry Gas Temp °F Outlet	Remarks
2	1313	263.21	0.33	0.69	0.69	4.0	147	328	326	57	87	86	
1	1315.5	264.42	0.28	0.59	0.59	3.5	147	328	326	57	87	88	
END	1318	265.351	–	–	–	–	–	–	–	–	–	–	
A6	1331	265.351	0.52	1.10	1.10	5.0	148	322	325	58	87	88	
5	1333.5	266.85	0.50	1.05	1.05	5.0	148	322	324	58	88	88	
4	1336	268.10	0.48	1.00	1.00	4.5	148	324	324	59	88	88	
3	1338.5	269.78	0.46	0.97	0.97	4.5	147	328	325	59	88	88	
2	1341	270.93	0.40	0.84	0.84	4.5	148	326	327	59	88	88	
1	1343.5	272.16	0.28	0.59	0.59	3.5	146	326	327	59	88	88	
END	1346	273.310	–	–	–	–	–	–	–	–	–	–	

Version 1
22 OCTOBER 2002

METCO ENVIRONMENTAL

5B/OTM 28 Field Data

Job Number 10-274
Job Name Cidgo
Run Number 3
Unit West FCCU
Date 6/1/10
Operator Starkey/Morris/Cutaia
Sample box No. BR1 Meter Box No. T2-4

Read and record at the start of each test point.

Purge to: 1705
Purge time: 1805
Pitot Leak Check Initial ✓ Final ✓

Ambient Temp. °F 78
Assumed Moisture % ~~24~~
Probe Length 12
C Factor 2.103 to reference.
Initial Leak @ 15.5 "Hg = 0.004 cfm
Final Leak @ 12.0 "Hg = 0.010 cfm

Point	Clock Time	Dry Gas Meter, CF	ΔP_s "Pitot" "H_2O	Orifice ΔH "H_2O Desired	P_m Orifice ΔH "H_2O Actual	Pump Vacuum "Hg Gauge	T_s Stack Temp °F	Probe Temp °F	Oven Temp °F	Effluent Temp °F	T_m Dry Gas Temp °F Inlet	Dry Gas Temp °F Outlet	Remarks
D6	1500	274.902	0.52	1.10	1.10	5.5	148	327	328	59	87	87	
5	1502.5	276.41	0.50	1.05	1.05	5.5	148	326	327	60	87	87	
4	1505	277.60	0.48	1.00	1.00	5.0	148	324	327	62	87	87	
3	1507.5	279.00	0.42	0.88	0.88	5.0	148	327	327	62	87	87	
2	1510	280.62	0.36	0.76	0.76	4.5	148	328	328	61	87	88	
1	1512.5	281.71	0.33	0.69	0.69	4.5	148	328	329	62	88	88	
END	1515	282.826	–	–	–	–	–	–	–	–	–	–	
C6	1532	282.826	0.48	1.00	1.00	5.5	148	325	325	~~327~~ 67	86	86	
5	1534.5	284.49	0.50	1.05	1.05	5.5	148	328	327	~~328~~ 60	86	86	
4	1537	285.63	0.50	1.05	1.05	5.5	148	327	327	61	86	86	
3	1539.5	287.15	0.46	0.97	0.97	5.5	148	328	327	62	86	86	
2	1542	288.52	0.36	0.76	0.76	4.5	148	327	327	60	87	88	
1	1544.5	289.47	0.28	0.59	0.59	4.0	148	326	325	60	88	87	
END	1547	290.788	–	–	–	–	–	–	–	–	–	–	
B6	1555	290.788	0.47	0.99	0.99	6.0	148	328	327	61	88	87	
5	1557.5	292.04	0.44	0.93	0.93	5.5	148	326	327	61	88	86	
4	1600	293.37	0.41	0.86	0.86	5.5	148	327	328	60	88	87	
3	1602.5	294.77	0.38	0.80	0.80	5.0	149	324	327	57	88	86	

Pitot Tube Calibration Factor C_p 0.820
Volume Collected V_m TF ~~31.401~~ 31.276 ft^3
Water Collected V_w 201.2 ml
Time of Test T_t 60 min.
Stack Pressure P_s -0.34 "H_2O

Pitot Tube No. T4-ESC-8
Baro. Press. P_b 29.92 "Hg
Probe Tip Dia. D_n 0.250 in.
% CO_2 14.5 % CO 00
% O_2 3.7 % N_2 81.8
Area Stack A_s 22,167 in^2

Barometer No. 49-2 Probe Tip No. 10-274-I
Total Volume of Leak Checks After Start: – ft^3
V_m = Dry Gas Meter Calibration Factor ~~1.004~~ 1.000 X 31.276
{Dry Gas Meter Reading – ft^3 – (T_t – min. X Leak Rate – cfm)]

VERSION 1
22 OCTOBER 2002

Impinger Box No. BR1

Water Weight Gain

Impinger 1	Final Weight	798.7		Impinger 1	192.7
	Initial Weight	606.0			
	Increase			Impinger 2	1.0
Impinger 2	Final Weight	560.6		Impinger 3	-2.4
	Initial Weight	559.5			
	Increase			Impinger 4	9.8
			V_w =		
Impinger 3	Final Weight	725.2	g SO_2 = -	Impinger 5	
	Initial Weight	727.6	V_w =		
	Increase			Impinger 6	
Impinger 4	Final Weight	988.3		Impinger 7	
	Initial Weight	978.5			
	Increase			Total	201.2 ✓ = V_w

Impinger 5	Final Weight		P_b =	29.92 ✓	$\%CO_2$ =	14.5 ✓	
	Initial Weight		V_m =	TF ~~31.401~~ 31.276 ✓	$\%O_2$ =	3.7 ✓	
	Increase		V_w =	201.2 ✓	%CO =	00 ✓	
			P_m =	0.892 ✓	$\%N_2$ =	81.8 ✓	
Impinger 6	Final Weight		Avg ΔP =	TF ~~0.4225~~ 0.423 ✓	A_s =	22167 ✓	
	Initial Weight				D_n =	0.250 ✓	
	Increase		Avg$\sqrt{\Delta P}$ =	0.647 ✓	T_t =	60 ✓	
			C_p =	0.820 ✓			
Impinger 7	Final Weight		P_s =	-0.39 "H_2O ✓		29.90 ✓	"Hg
	Initial Weight		T_m =	87 ✓ °F		547 ✓	°R
	Increase		T_s =	149 ✓ °F		609 ✓	°R

Moisture Content: %M = ~~23.82~~ TF 23.89 ✓ M_d = ~~0.7618~~ TF 0.7611 ✓ MW_d = 30.465 ✓ MW = TF ~~27.50~~ 27.49 ✓

$$Vm_{std} = 17.65\ Vm \left[\frac{P_b + \frac{P_m}{13.6}}{T_m + 460}\right] = 17.65 \times \text{TF } \cancel{31.401}\ 31.276 \left[\frac{29.92 + \frac{0.892}{13.6}}{87 + 460}\right] = \text{TF } \cancel{30.381}\ 30.261 \text{ sft}^3 \text{ ✓}$$

$$= \text{TF } \cancel{0.506}\ 0.504 \text{ scfm ✓}$$

Vw_{gas} = 0.0472 x Vw = 0.0472 x 201.2 = 9.497 ✓ sft^3

$$\% \text{ Moisture} = \frac{Vw_{gas}}{Vm_{std} + Vw_{gas}} \times 100 = \frac{9.497}{\text{TF } \cancel{30.381}\ 30.261 + 9.497} \times 100 = \text{TF } \cancel{23.82}\ 23.89\ \% \text{ ✓}$$

$$V_s = 5123.8 \times 0.647 \sqrt{\frac{609}{27.50 \times 29.90}} \times 0.820 = \text{TF } \cancel{2339}\ 2340 \text{ fpm ✓}$$

ACFM: TF ~~360,192~~ 360,197 ✓

SCFM: TF ~~298,527~~ 298,409 ✓

$$\%I = \frac{1{,}039 \times \text{TF } \cancel{30.381}\ 30.261 \times 609}{\text{TF } \cancel{0.7618}\ 0.7611 \times 60 \times \text{TF } \cancel{2339}\ 2340 \times 29.90 \times (0.250)^2} = \text{TF } \cancel{96.2}\ 95.9\ \%$$

%EA: 20.6

Run Number 3

Unit West FCCU

Date 7/1/10

5B/OTM 28 FIELD DATA

Point	Clock Time	Dry Gas Meter, CF	"Pitot" "H_2O (ΔP_s)	Orifice ΔH "H_2O Desired (P_m)	Orifice ΔH "H_2O Actual (P_m)	Pump Vacuum "Hg Gauge	Stack Temp °F (T_s)	Probe Temp °F	Oven Temp °F	Effluent Temp °F	Dry Gas Temp °F Inlet (T_m)	Dry Gas Temp °F Outlet (T_m)	Remarks
2	1605	296.01	0.30	0.63	0.63	5.5	150	323	330	62	87	86	
1	1607.5	297.29	0.30	0.63	0.63	5.0	150	321	329	62	87	87	
END	1610	298.245	–	–	–	–	–	–	–	–	–	–	
A 6	1621	298.245	0.55	1.20	1.20	7.5	151	328	328	61	88	88	
5	1623.5	299.58	0.55	1.20	1.20	7.5	151	324	325	61	88	88	
4	1626	300.93	0.46	0.97	0.97	7.0	152	324	326	61	89	88	
3	1628.5	302.11	0.41	0.86	0.86	8.5	151	326	325	60	88	88	
2	1631	303.60	0.38	0.80	0.80	7.0	152	323	329	61	87	87	
1	1633.5	304.69	0.30	0.63	0.63	7.0	152	324	324	60	88	87	
END	1636	306.178	–	–	–	–	–	–	–	–	–	–	

Version 1
22 OCTOBER 2002

PRELIMINARY VELOCITY TRAVERSE DATA
AND
SAMPLING LOCATION DATA

Job Number 10-274

Job Name Citgo

Sampling Location FCCU

Date 6/29/10 Time 1930

Stack Height _____ ft.

Sampling Port Height Above Ground _____ ft.

	Port A	Port B	Port C	Port D	Average
Port & Inside Diameter (in.)					
Port & Wall Thickness (in.)					
Inside Stack Diameter (in.)					

Sampling Ports are _____ ft. _____ in. (_____ stack diameters) downstream from disturbance (inlet, constriction, bend, expansion)

Sampling Ports are _____ ft. _____ in. (_____ stack diameters) upstream from disturbance (outlet, constriction, bend, expansion)

Point Number	Percent Diameter	Distance from Ref. Point (decimal in.)	Distance from Ref. Point (fractional in.)	Port A $\Delta P/T_s/\alpha$	Port B $\Delta P/T_s/\alpha$	Port C $\Delta P/T_s/\alpha$	Port D $\Delta P/T_s/\alpha$
0 ~~1~~	—	—	—	— / — / —	— / — / —	— / — / —	— / — / —
1 ~~2~~				0.30 / 149 / 5	0.29 / 149 / 5	0.27 / 149 / 0	0.31 / 151 / 0
2 ~~3~~				0.33 / 148 / 0	0.31 / 149 / 0	0.37 / 149 / 5	0.32 / 150 / 0
3 ~~4~~				0.40 / 150 / 0	0.39 / 149 / 0	0.38 / 149 / 0	0.39 / 149 / 5
4 ~~5~~				0.51 / 151 / -10	0.50 / 149 / -10	0.50 / 149 / 0	0.46 / 149 / 0
5 ~~6~~				0.54 / 150 / -10	0.54 / 149 / 0	0.54 / 149 / -5	0.48 / 149 / 0
6 ~~7~~				0.56 / 149 / 0	0.55 / 149 / 0	0.55 / 149 / 0	0.45 / 149 / -5
8				/ /	/ /	/ /	/ /
9				/ /	/ /	/ /	/ /
10				/ /	/ /	/ /	/ /
11				/ /	/ /	/ /	/ /
12				/ /	/ /	/ /	/ /
13				/ /	/ /	/ /	/ /
14				/ /	/ /	/ /	/ /
15				/ /	/ /	/ /	/ /
16				/ /	/ /	/ /	/ /
17				/ /	/ /	/ /	/ /
18				/ /	/ /	/ /	/ /
19				/ /	/ /	/ /	/ /
20				/ /	/ /	/ /	/ /
21				/ /	/ /	/ /	/ /
22				/ /	/ /	/ /	/ /
23				/ /	/ /	/ /	/ /
24				/ /	/ /	/ /	/ /

Pitot Tube No. T4-E-8

C_p = 0.820

P_b = 29.54 "Hg

P_s = ~~#~~ 0.32 "H_2O 29.60 "Hg

A_s = 22167 in.^{2}

Average ΔP 0.428

Average $\Delta P^{1/2}$ 0.650

Average T_x 150 °F

Average α ~~0.833~~ 25 degrees

APPENDIX E

Analytical Data

METCO Environmental

Particulate Analysis Summary

Job Number 10-274

Job Name CITGO

Location Lemont, IL

Date Analysis Completed 7/16/10

Unit Tested FCCU WESP Stack

Run No.	1	2	3		
Particulate on Filter (mg)	74.2	68.2	~~27.1~~	28.1	08/10/10
Particulate in Front Wash (mg)*	18.3	0.0	12.0		
MF (mg)	92.5	68.2	~~39.1~~	40.1	
Particulate in Impinger #1 (mg)**					
MT (mg)					

REA

Analyst

* Less Acetone Residue

** Less Ammonium Sulfate

METCO Environmental

Particulate Analysis EPA Method 5 13/202

Stack Filters

Job Number 10-274

Job Name CITGO

Location Lemont IL

Unit Tested FCCU WESP Stack

Desiccator Time In	1500 7/12	1620 7/13	1625 7/14		
Desiccator Time Out	1615 7/13	1670 7/14	1630 7/15		

Run No. 1	Filter No. G88W104				
Filter & Particulate + Tare Weight (g)					
Tare Weight (g)					
Filter & Particulate (g)	0.4987	0.4986			

Filter & Particulate Average (g) 0.4986

Initial Filter Weight (g) 0.4224

Total Particulate (mg) 74.2

Run No. 2	Filter No. ~~G88W107~~ G88W105				
Filter & Particulate + Tare Weight (g)					
Tare Weight (g)					
Filter & Particulate (g)	~~0.4491~~ 0.4940	0.4884	0.4888		

Filter & Particulate Average (g) 0.4888

Initial Filter Weight (g) 0.4206

Total Particulate (mg) 68.2

Run No. 3	Filter No. G88W107				
Filter & Particulate + Tare Weight (g)					
Tare Weight (g)					
Filter & Particulate (g)	0.4491	0.4513	0.4517		

Filter & Particulate Average (g) 0.4517

Initial Filter Weight (g) 0.4236

Total Particulate (mg) ~~27.1~~ 28.1

Run No. B14	Filter No. G88499				
Filter & Particulate + Tare Weight (g)					08/10/10
Tare Weight (g)					
Filter & Particulate (g)	0.4011	0.4010			

Mettler AE240

Filter & Particulate Average (g) 0.4010

Initial Filter Weight (g) 0.4003

Total Particulate (mg) 0.7

REA

Analyst

METCO Environmental

Particulate Analysis EPA Method 5 B 1202

Front Wash

Job Number 10-274 Location Lemont, IL

Job Name CITGO Unit Tested FCC 4 WESP Stack

Desiccator Time In	1500 7/12	1600 7/13	1645 7/14		
Desiccator Time Out	1518 7/13	1600 7/14	0945 7/16		

Run No. 1	Volume (ml) 198				
Final Weight (g)	167.7143	167.7136	167.7133		
Initial Weight (g)	167.6946	167.6946	167.6946		
Particulate Weight (g)	0.0197	0.0190	0.0187		

Particulate Average (mg) 18.7
Less Acetone Blank (mg) 0.4
Total Particulate (mg) 18.3

Run No. 2	Volume (ml) 80				
Final Weight (g)	168.4437	168.4428	168.4424		
Initial Weight (g)	168.4424	168.4424	168.4424		
Particulate Weight (g)	0.0013	0.0004	0.0000		

Particulate Average (mg) 0.0
Less Acetone Blank (mg) 0.2
Total Particulate (mg) 0.0

Run No. 3	Volume (ml) 155				
Final Weight (g)	136.0276	136.0265	136.0266		
Initial Weight (g)	136.0143	136.0143	136.0143		
Particulate Weight (g)	0.0133	0.0122	0.0123		

Particulate Average (mg) 12.3
Less Acetone Blank (mg) 0.3
Total Particulate (mg) 12.0

Acetone Blank	Volume (ml) 137				
Final Weight (g)	177.2138	177.2135			
Initial Weight (g)	177.2132	177.2132			
Difference (g)	0.0006	0.0003			

Mettler AE240.00

Average (mg) 0.3
* mg/l 2.2

* Note: If greater than 7.9 mg/l, use 7.9 mg/l.

REA
Analyst

METCO Environmental

Particulate Analysis Summary

Job Number 10-274

Job Name CITGO

Location

Date Analysis Completed Lemont, IL

Unit Tested FCCU WESP Stack

Run No.	1	2	3		
Particulate on Filter (mg)	93.9	84.3	33.1		
Particulate in Front Wash (mg)*	11.3	3.3	4.2		
MF (mg)	105.2	87.6	37.3		
Particulate in Impinger #1 (mg)**					
MT (mg)					

REA
Analyst

* Less Acetone Residue

** Less Ammonium Sulfate

METCO Environmental

Particulate Analysis EPA Method 5 13/28

Stack Filters

Job Number 10-274

Job Name CITGO

Location Lemont IL

Unit Tested FCC UWESP Stack

Desiccator Time In	1500 7/12	1625 7/13	1630 7/14		
Desiccator Time Out	1620 7/13	1625 7/14	1635 7/15		

Run No. 1	Filter No. G88W101				
Filter & Particulate + Tare Weight (g)					
Tare Weight (g)					
Filter & Particulate (g)	0.5271	0.5178	0.5182		

Filter & Particulate Average (g) 0.5182

Initial Filter Weight (g) 0.4243

Total Particulate (mg) 939

Run No. 2	Filter No. G88W106				
Filter & Particulate + Tare Weight (g)					
Tare Weight (g)					
Filter & Particulate (g)	0.5048	0.5000	0.5004		

Filter & Particulate Average (g) 0.5004

Initial Filter Weight (g) ~~0.4217~~ 0.4161

Total Particulate (mg) 84.3

Run No. 3	Filter No. G88W108				
Filter & Particulate + Tare Weight (g)					
Tare Weight (g)					
Filter & Particulate (g)	0.4560	0.4558			

Filter & Particulate Average (g) 0.4558

Initial Filter Weight (g) 0.4227

Total Particulate (mg) 33.1

Run No. B/K	Filter No. G88Y100				
Filter & Particulate + Tare Weight (g)					
Tare Weight (g)					
Filter & Particulate (g)	0.3956	0.3957			

Mettler AE240

Filter & Particulate Average (g) 0.3957

Initial Filter Weight (g) 0.3951

Total Particulate (mg) 0.6

REA

Analyst

METCO Environmental

Particulate Analysis EPA Method 5B/OTM28

Front Wash

Job Number 10-274 Location Lemont, IL

Job Name CITGO Unit Tested FCC4 WESP Stack

Desiccator Time In	1500 7/12	1615 7/13			
Desiccator Time Out	1530 7/13	1615 7/14			

Run No. 1	Volume (ml) 212				
Final Weight (g)	134.3304	134.3306			
Initial Weight (g)	134.3193	134.3193			
Particulate Weight (g)	0.0111	0.0113			

Particulate Average (mg) 11.3
Less Acetone Blank (mg) 0
Total Particulate (mg) 11.3

Run No. 2	Volume (ml) 63				
Final Weight (g)	139.7534	139.7534			
Initial Weight (g)	139.7501	139.7501			
Particulate Weight (g)	0.0033	0.0033			

Particulate Average (mg) 3.3
Less Acetone Blank (mg) 0
Total Particulate (mg) 3.3

Run No. 3	Volume (ml) 148				
Final Weight (g)	155.2613	155.2613			
Initial Weight (g)	155.2571	155.2571			
Particulate Weight (g)	0.0042	0.0042			

Particulate Average (mg) 4.2
Less Acetone Blank (mg) 0
Total Particulate (mg) 4.2

Acetone Blank	Volume (ml) 147				
Final Weight (g)	165.7879	165.7880			
Initial Weight (g)	165.7880	165.7880			
Difference (g)	0	0			

Mettler AE2~~40~~00

Average (mg) 0
* mg/l

* Note: If greater than 7.9 mg/l, use 7.9 mg/l.

REA
Analyst

Glass Filter

Initial Stack Filter Weights

G 88mm N Series

Dessicator

Analyst MA

IN Date/ Time	1/21/09 #1-121	/	2/6/09 / #121-132	/
OUT Date/ Time	/	/	/	/

1	0.4245	0.4245	0.	OUT 1 1/30/09
2	0.4249	0.4249	0.	
3	0.4204	0.4203	0.	
4	0.4215	0.4214	0.	
5	0.4273	0.4273	0.	
6	0.4198	0.4197	0.	
7	0.4226	0.4224	0.	
8	0.4239	0.4240	0.	
9	0.4209	0.4207	0.	
10	0.4215	0.4215	0.	
11	0.4265	0.4265	0.	
12	0.4239	0.4237	0.	
13	0.4250	0.4249	0.	
14	0.4293	0.4293	0.	
15	0.4265	0.4264	0.	
16	0.4195	0.4195	0.	
17	0.4239	0.4238	0.	
18	0.4281	0.4280	0.	
19	0.4254	0.4254	0.	
20	0.4203	0.4202	0.	
21	0.4214	0.4213	0.	OUT 2 2/3/09
22	0.4220	0.4219	0.	
23	0.4284	0.4283	0.	
24	0.4219	0.4217	0.	
25	0.4211	0.4211	0.	
26	0.4236	0.4237	0.	
27	0.4294	0.4294	0.	
28	0.4235	0.4236	0.	
29	0.4272	0.4273	0.	
30	0.4282	0.4282	0.	
31	0.4211	0.4211	0.	
32	0.4238	0.4238	0.	
33	0.4266	0.4266	0.	
34	0.4218	0.4217	0.	
35	0.4268	0.4268	0.	
36	0.4260	0.4259	0.	
37	0.4231	0.4229	0.	
38	0.4292	0.4290	0.	
39	0.4259	0.4258	0.	
40	0.4196	0.4195	0.	
41	0.4279	0.4279	0.	
42	0.4238	0.4238	0.	
43	0.4283	0.4283	0.	
44	0.4235	0.4235	0.	

45	0.4262	0.4262	0.	OUT 1 1/30/09
46	0.4240	0.4240	0.	
47	0.4257	0.4258	0.	
48	0.4239	0.4236	0.	
49	0.4227	0.4227	0.	
50	0.4227	0.4227	0.	
51	0.4193	0.4192	0.	
52	0.4246	0.4247	0.	
53	0.4221	0.4221	0.	
54	0.4195	0.4194	0.	
55	0.4263	0.4263	0.	OUT 2 2/2/09
56	0.4219	0.4219	0.	
57	0.4205	0.4204	0.	
58	0.4284	0.4284	0.	
59	0.4207	0.4207	0.	
60	0.4209	0.4208	0.	
61	0.4186	0.4184	0.	OUT 1 1/30/09
62	0.4212	0.4210	0.	
63	0.4254	0.4254	0.	
64	0.4229	0.4227	0.	
65	0.4219	0.4218	0.	
66	0.4189	0.4187	0.	
67	0.4205	0.4203	0.	
68	0.4198	0.4197	0.	
69	0.4207	0.4206	0.	
70	0.4164	0.4163	0.	
71	0.4136	0.4136	0.	
72	0.4179	0.4177	0.	
~~73~~	0.4221	0.4217	0.	
~~74~~	0.4230	0.4229	0.	
~~75~~	0.4225	0.4226	0.	
76	0.4189	0.4189	0.	
77	0.4172	0.4172	0.	
78	0.4237	0.4236	0.	OUT 2 2/3/09
79	0.4237	0.4237	0.	
80	0.4228	0.4226	0.	
81	0.4188	0.4186	0.	
82	0.4179	0.4178	0.	
83	0.4230	0.4230	0.	
84	0.4233	0.4231	0.	
85	0.4227	0.4226	0.	
86	0.4142	0.4142	0.	
87	0.4243	0.4243	0.	
88	0.4233	0.4233	0.	

89	0.4234	0.4233	0.	OUT 2 2/3/09
90	0.4176	0.4176	0.	
91	0.4202	0.4202	0.	
92	0.4235	0.4232	0.	
93	0.4227	0.4227	0.	
94	0.4159	0.4160	0.	
95	0.4253	0.4253	0.	
96	0.4198	0.4197	0.	
97	0.4250	0.4249	0.	
98	0.4243	0.4243	0.	
99	0.4253	0.4253	0.	
100	0.4190	0.4190	0.	
~~101~~	0.4243	0.4243	0.	
102	0.4230	0.4231	0.	
103	0.4239	0.4238	0.	
~~104~~	0.4226	0.4224	0.	
~~105~~	0.4207	0.4206	0.	
~~106~~	0.4163	0.4161	0.	
~~107~~	0.4238	0.4236	0.	
~~108~~	0.4229	0.4227	0.	
109	0.4215	0.4213	0.	
110	0.4199	0.4199	0.	OUT 1 1/30/09
111	0.4196	0.4196	0.	
112	0.4211	0.4211	0.	
113	0.4215	0.4214	0.	
114	0.4194	0.4193	0.	
115	0.4193	0.4193	0.	
116	0.4191	0.4191	0.	
117	0.4226	0.4226	0.	
118	0.4214	0.4213	0.	
119	0.4216	0.4216	0.	
120	0.4232	0.4231	0.	
121	0.4196	0.4196	0.	OUT 1 2/10/09
122	0.4153	0.4152	0.	
123	0.4443	0.4442	0.	
124	0.4419	0.4418	0.	
125	0.4445	0.4444	0.	
126	0.4454	0.4453	0.	
127	0.4272	0.4271	0.	OUT 2 2/11/09
128	0.4306	0.4306	0.	
129	0.4273	0.4273	0.	
130	0.4229	0.4228	0.	
131	0.4254	0.4253	0.	
132	0.4237	0.4237	0.	

Initial Stack Filter Weights

G 88mm Y Series

Desiccator

Analyst MH

IN Date/ Time	1/12/10	/	/	/
OUT Date/ Time	/	/	/	/

1	0.4204	0.4203	0.	
2	0.4223	0.4222	0.	
3	0.4217	0.4216	0.	
4	0.4242	0.4242	0.	
5	0.4257	0.4256	0.	
6	0.4237	0.4238	0.	
7	0.4217	0.4216	0.	
8	0.4271	0.4270	0.	
9	0.4250	0.4250	0.	
10	0.4229	0.4229	0.	
11	0.4205	0.4205	0.	
12	0.4223	0.4221	0.	
13	0.4217	0.4217	0.	
14	0.4248	0.4247	0.	
15	0.4002	0.4002	0.	
16	0.4120	0.4120	0.	
17	0.4145	0.4146	0.	
18	0.4166	0.4166	0.	
19	0.4178	0.4176	0.	
20	0.4147	0.4147	0.	
21	0.4184	0.4183	0.	
22	0.4112	0.4113	0.	
23	0.3930	0.3931	0.	
24	0.3946	0.3946	0.	
25	0.4174	0.4174	0.	10-176
26	0.4192	0.4193	0.	"
27	0.3910	0.3910	0.	"
28	0.4170	0.4170	0.	"
29	0.4198	0.4197	0.	10-176
30	0.3924	0.3924	0.	"
31	0.4166	0.4167	0.	"
32	0.4173	0.4174	0.	"
33	0.3905	0.3903	0.	10-139
34	0.3981	0.3981	0.	"
35	0.3988	0.3989	0.	"
36	0.3918	0.3918	0.	"
37	0.4222	0.4221	0.	
38	0.4187	0.4187	0.	
39	0.4238	0.4239	0.	
40	0.4200	0.4200	0.	
41	0.4174	0.4174	0.	
42	0.4219	0.4219	0.	
43	0.4205	0.4204	0.	
44	0.4195	0.4194	0.	

out 1 2/14/10 out 2 2/15/10 out 2 2/23/10 out 1 2/15/10 out 2 4/1/10 out 1 3/30/10

45	0.4233	0.4232	0.	
46	0.4221	0.4221	0.	
47	0.4239	0.4239	0.	
48	0.4169	0.4168	0.	
49	0.4229	0.4228	0.	10-16
50	0.4180	0.4180	0.	
51	0.4272	0.4272	0.	
52	0.4154	0.4154	0.	10-16
53	0.4229	0.4229	0.	10-16
54	0.4184	0.4184	0.	"
55	0.4123	0.4123	0.	"
56	0.4243	0.4243	0.	"
57	0.4197	0.4197	0.	"
58	0.4155	0.4155	0.	
59	0.4253	0.4253	0.	10-16
60	0.4227	0.4227	0.	
61	0.4176	0.4176	0.	
62	0.4144	0.4144	0.	
63	0.4211	0.4211	0.	
64	0.4228	0.4228	0.	
65	0.4149	0.4148	0.	
66	0.4237	0.4236	0.	
67	0.4181	0.4181	0.	
68	0.4118	0.4118	0.	
69	0.4242	0.4241	0.	
70	0.4220	0.4219	0.	
71	0.4157	0.4156	0.	
72	0.4148	0.4147	0.	
73	0.4230	0.4230	0.	10-54
74	0.4232	0.4232	0.	
75	0.4173	0.4173	0.	
76	0.4249	0.4249	0.	
77	0.4250	0.4249	0.	10-54
78	0.4159	0.4160	0.	
79	0.4239	0.4240	0.	
80	0.4254	0.4253	0.	
81	0.4201	0.4201	0.	
82	0.4176	0.4176	0.	
83	0.4231	0.4230	0.	
84	0.4171	0.4171	0.	
85	0.4148	0.4147	0.	
86	0.4231	0.4231	0.	
87	0.4136	0.4136	0.	
88	0.4167	0.4168	0.	

out 2 4/1/10 out 1 3/30/10 out 1 3/31/10 out 2 4/2/10 out 2 4/12/10 out 1 4/9/10

out 1 4/9/10

89	0.4211	0.4210	0.	
90	0.4017	0.4016	0.	
91	0.3931	0.3931	0.	
92	0.3962	0.3961	0.	
93	0.3977	0.3977	0.	
94	0.3937	0.3937	0.	
95	0.3934	0.3935	0.	
96	0.4000	0.4000	0.	
97	0.3959	0.3962	0.	
98	0.3969	0.3969	0.	
99	0.4003	0.4003	0.	
100	0.3951	0.3951	0.	
101	0.3973	0.3972	0.	
102	0.3955	0.3954	0.	
103	0.3979	0.3979	0.	
104	0.3974	0.3973	0.	
105	0.3908	0.3908	0.	
106	0.3968	0.3967	0.	
107	0.3966	0.3966	0.	
108	0.3963	0.3962	0.	
109	0.3922	0.3922	0.	
110	0.3990	0.3990	0.	
111	0.3993	0.3993	0.	
112	0.3967	0.3967	0.	
113	0.3930	0.3930	0.	
114	0.3980	0.3980	0.	
115	0.4014	0.4013	0.	
116	0.3935	0.3935	0.	
117	0.3963	0.3964	0.	
118	0.4001	0.4001	0.	
119	0.3950	0.3950	0.	
120	0.3947	0.3946	0.	
121	0.3979	0.3980	0.	10-141
122	0.3937	0.3938	0.	"
123	0.3979	0.3980	0.	
124	0.3944	0.3945	0.	
125	0.3943	0.3943	0.	
126	0.4010	0.4011	0.	10-253
127	0.3952	0.3952	0.	
128	0.3969	0.3969	0.	
129	0.3912	0.3912	0.	
130	0.3978	0.3977	0.	
131	0.3944	0.3944	0.	
132	0.3968	0.3968	0.	

out 1 4/9/10 out 2 4/12/10 out 1 4/9/10

METCO ENVIRONMENTAL

LABORATORY QUALITY ASSURANCE DATA

BALANCE ID Mettler AE240
SIN K 51852 weights 09180701

DATE & TIME		100g STD	1.0g STD	0.5g STD	ANALYST	REMARKS
7/14/10	Actual (g)	100,0000	1.0001	0,5000	REA	
0930	Difference (mg)	0	+0.1	0		
1100	Actual (g)	100,0000	1.0000	0,5000	REA	
7/15	Difference (mg)	0	0	0		
0945	Actual (g)	100,0000	1.0000	0.5000	REA	
7/16	Difference (mg)	0	0	0		
0900	Actual (g)	99,9999	1,0001	0,5000	REA	
7/19	Difference (mg)	-0.1	+0,1	0		
0900	Actual (g)	100,0001	1.0001	0,5000	REA	
7/20/10	Difference (mg)	+0.1	+0.1	0		
0830	Actual (g)	100,0000	1.0000	0,5000	REA	
7/21/10	Difference (mg)	0	0	0		
0830	Actual (g)	99,9999	1,0000	0,5000	REA	
7/22/11	Difference (mg)	-0.1	0	0		
	Actual (g)					
	Difference (mg)					
	Actual (g)					
	Difference (mg)					
	Actual (g)					
	Difference (mg)					
	Actual (g)					
	Difference (mg)					
	Actual (g)					
	Difference (mg)					

METCO ENVIRONMENTAL

LABORATORY QUALITY ASSURANCE DATA

BALANCE ID Mettler AE200
S# 37636 Weights 0918079

DATE & TIME		100g STD	1.0g STD	0.5g STD	ANALYST	REMARKS
0930	Actual (g)	99.9999	1.0001	0.5000	REA	
7/9/10	Difference (mg)	-0.1	+0.1	0		
1100	Actual (g)	100.0001	1.0001	0.5001	REA	
7/15/10	Difference (mg)	+0.1	+0.1	+0.1		
0825	Actual (g)	100.0001	1.0000	0.5000	REA	
7/13/10	Difference (mg)	+0.1	0	0		
0930	Actual (g)	100.0000	1.0000	0.5000	REA	
7/14/10	Difference (mg)	0	0	0		
1100	Actual (g)	100.0000	1.0001	0.5000	REA	
7/15/10	Difference (mg)	0	+0.1	0		
0945	Actual (g)	99.9999	1.0000	0.5000	REA	
7/16/10	Difference (mg)	-0.1	0	0		
0900	Actual (g)	99.9999	1.0000	0.5000	REA	
7/20/10	Difference (mg)	-0.1	0	0		
1330	Actual (g)	99.9999	0.9999	0.4999	REA	
7/21/10	Difference (mg)	-0.1	-0.1	-0.1		
0830	Actual (g)	100.0000	1.0001	0.5000	REA	
7/22/10	Difference (mg)	0	+0.1	0		
	Actual (g)					
	Difference (mg)					
	Actual (g)					
	Difference (mg)					
	Actual (g)					
	Difference (mg)					

APPENDIX F

Plant Operational Data

Shappley, Ned

From: Romans, Trevor
Sent: Thursday, August 05, 2010 4:43 PM
To: Shappley, Ned
Subject: FW: Coke Burn Rates

From: Hutcherson, Mike
Sent: Thursday, August 05, 2010 4:11 PM
To: Romans, Trevor
Subject: FW: Coke Burn Rates

CITGO Coke burn rates

Mike Hutcherson
Director of Field Operations
METCO Environmental
972-931-7127 phone
972-931-8398 fax
www.metcoenv.com

From: Case, Paul [mailto:pcase@citgo.com]
Sent: Thursday, August 05, 2010 4:09 PM
To: Hutcherson, Mike
Cc: Cordina, Matt; Klickman, Matt; Case, Paul
Subject: Coke Burn Rates

Mike, here are the coke burn rates for the time period specified

Run	Start	End	coke burn rate (lb/hr)
1	6/30/2010 19:08	6/30/2010 20:34	61,869.6
2	7/1/2010 12:08	7/1/2010 13:46	61,222.4
3	7/1/2010 15:00	7/1/2010 16:36	60,881.3

Paul Case
FCC Unit Operations Process Engineer
630-257-4359

METCO ENVIRONMENTAL

APPENDIX G

Chain of Custody

METCO Environmental ©

CHAIN OF CUSTODY RECORD

Page 1 of 2

Job No.: 10-274
Job Name: Citgo
Location: Lemont, IL
Unit: Wasp FCCU

Project Manager: M. Hutcherson
Project Supervisor: J. Cutaia

Method: SB/202

SAMPLE I.D.	DATE	TIME	# OF CONT.	Absorb. Solution	Initial Vol.	PART	HCL	CL2	SO2	SO3			Recovered by	REMARKS (Specific Compounds/Methods)
Run 1 Filter	6/30/10	2150	1			✓							J Cutaia	
Run 1 FH		2152	1			✓								
Run 1 impinger 1-3 BH		2152	1	DI	300ml	✓								
Run 1 imp wash		2153	1			✓								
Run 2 Filter	7/1/10	1525	1			✓								
Run 2 FH		1430	1			✓								
Run 2 BH imp 1-3		1535	1	DI	300ml	✓								
Run 2 imp wash		1540	1			✓								
Run 3 Filter		1810	1			✓								
Run 3 FH		1815	1			✓								
Run 3 BH imp 1-3		1820	1	DI	300ml	✓								
Run 3 imp wash		1825	1			✓								

Samples Received for Transport/Shipment by:	[signature]	Date:	7/2/10	Time:	1500
Samples Received for Transport/Shipment by:		Date:		Time:	
Samples Received for Transport/Shipment by:		Date:		Time:	
Samples Shipped Via:		Date:		Time:	
Samples Received at Laboratory by:	[signature]	Date:	7/9/10	Time:	0940
Samples Analyzed by:	[signature]	Date:	7/16/10	Time:	0945
Samples Analyzed by:		Date:		Time:	
Data Checked by:	[signature]	Date:	08/10/10	Time:	1200

VERSION 2
10 MARCH 2003

METCO
Environmental ©

CHAIN OF CUSTODY RECORD

Job No.: 10-274
Job Name: Citgo
Location: Lemont, IL
Unit: FCCU WESP Stack

Project Manager: Hutcherson
Project Supervisor: Cutaia

Method: 5B/202

SAMPLE I.D.	DATE	TIME	# OF CONT.	Absorb. Solution	Initial Vol.	SAMPLE ANALYSIS REQUIRED: PART	HCL	CL2	SO2	SO3			Recovered by	REMARKS (Specific Compounds/Methods)
Blank DI	7/01/10	1310	1			✓							J Cutaia	
Blank Acetone		1315	1			✓								
Blank Filter		1316	1			✓								
Blank Methylene		1317	1			✓								

Samples Received for Transport/Shipment by:	Gordon Austin	Date:	7/2/10	Time:	1500
Samples Received for Transport/Shipment by:		Date:		Time:	
Samples Received for Transport/Shipment by:		Date:		Time:	
Samples Shipped Via:		Date:		Time:	
Samples Received at Laboratory by:	Robert Adler	Date:	7/12/10	Time:	0940
Samples Analyzed by:	Robert Adler	Date:	7/16/10	Time:	0945
Samples Analyzed by:		Date:		Time:	
Data Checked by:		Date:	08/10/10	Time:	1200

VERSION 2
10 MARCH 2003

G-3

10-274A

LM-2010-031164

METCO Environmental ©

CHAIN OF CUSTODY RECORD

Job No.: 10-274
Job Name: Citgo
Location: Lemont, IL
Unit: Wasp FCCU

Project Manager: M. Hutcherson
Project Supervisor: J. Curtain

Method: 5B1 OTM 28

SAMPLE I.D.	DATE	TIME	# OF CONT.	Absorb. Solution	Initial Vol.	PART	HCL	CL2	SO2	SO3			Recovered by	REMARKS (Specific Compounds/Methods)
Run1 PM Filter	6/30/10	2155	1			✓	✓						JCurtain	
Run1 FH		2156	1			✓	✓							
Run1 BH imp 1-2		2157	1			✓	✓							
Run1 Methylene wash		2157	1			✓	✓							
Run1 CPM Filter		2157	1			✓								
Run2 PM Filter	7/1/10	1400	1			✓	✓							
Run2 FH		1405	1			✓	✓							
Run2 BH imp 1-2		1525	1			✓	✓							
Run2 methylene wash		1520	1			✓								
Run2 CPM Filter		1525	1			✓								
Run3 PM Filter		1810	1			✓								
Run3 FH		1645	1			✓								
Run3 BH imp 1-2		1815	1			✓	✓							
Run3 Methylene wash		1820	1			✓	✓							

Samples Received for Transport/Shipment by: [signature]	Date: 7/2/10	Time: 1500	
Samples Received for Transport/Shipment by:	Date:	Time:	
Samples Received for Transport/Shipment by:	Date:	Time:	
Samples Shipped Via:	Date:	Time:	
Samples Received at Laboratory by: [signature]	Date: 7/9/10	Time: 0940	
Samples Analyzed by: [signature]	Date: 7/22/10	Time: 1400	
Samples Analyzed by:	Date:	Time:	
Data Checked by: [signature]	Date: 08/10/10	Time: 1200	

#10-274

VERSION 2
10 MARCH 2003

LM-2010-031165

METCO Environmental ©

CHAIN OF CUSTODY RECORD

Job No.: 10-274
Job Name: Citgo
Location: Lemont, IL
Unit: FCCU WESP Stack

Project Manager: Hutcherson
Project Supervisor: Cutaia

Method: 5B / OTM 28

SAMPLE I.D.	DATE	TIME	# OF CONT.	Absorb. Solution	Initial Vol.	SAMPLE ANALYSIS REQUIRED: PART	HCL	CL2	SO2	SO3			Recovered by	REMARKS (Specific Compounds/Methods)
Run 3 CPM Filter	7/1/10	1825	1			✓							J Cutaia	
TB ~~PM~~ JC Filter CPM		1300	1			✓								
TB BH imp 1-2		1300	1			✓								
TB Methylene wash		1301	1			✓								
~~Ft~~														
Blank Filter		1310	1			✓								
Blank Acetone		1315	1			✓								
Blank Methyene Chloride		1316	1			✓								
Blank DI		1317	1			✓								

Samples Received for Transport/Shipment by: Graham Bush	Date: 7/2/10	Time: 1500	
Samples Received for Transport/Shipment by:	Date:	Time:	
Samples Received for Transport/Shipment by:	Date:	Time:	
Samples Shipped Via:	Date:	Time:	
Samples Received at Laboratory by: Robert Adam	Date: 7/9/10	Time: 0940	
Samples Analyzed by: Robert Adam	Date: 7/22/10	Time: 1400	
Samples Analyzed by:	Date:	Time:	
Data Checked by: [signature]	Date: 08/10/10	Time: 1200	

G-5

10-274A

VERSION 2
10 MARCH 2003

LM-2010-031166

APPENDIX H

Resumes of Test Personnel

METCO ENVIRONMENTAL

ROBERT M. PATTERSON; President

Education	B. S. 1983, Central Michigan University; Mt. Pleasant, Michigan, in Geology and Earth Science-Meteorology.
Professional Training Courses	Attended a two-day short course, "Performing and Observing Source Sampling" in Dallas, Texas. Attended a one-day short course on basic supervision. Attended a four-week management course presented by the American Management Association, 1991-1992.
Certification	Certified Visible Emissions Evaluator Certified Cabot Full-Face Respirator Fit Tester
Professional Memberships	Source Evaluation Society American Management Association
Technical Experience	Participated in the sampling of over 1,000 sources, including several of which were sampled simultaneously using more than one sampling train. Thoroughly trained in all EPA testing procedures, 1986-present. Over nineteen years experience with EPA and Texas Air Control Board methods of sampling - both stationary sources and ambient air. CFR, Title 40, Chapter I, Part 60, EPA Methods 1 through 25, and 101 through 110. Performance Specifications 1 through 5. CFR, Title 40, Chapter I, Part 50, Appendix A through F. "Sampling Procedures Manual, Texas Air Control Board, January 1983." Parts 1-1 through 14-6, Appendix B through Appendix M. Experienced with sampling Method 0010, Modified Method 5 Sampling Train; Method 0030, Volatile Organic Sampling Train; and various EPA and "Site Specific" multiple metal and acid gas sampling trains.

(continued)

METCO ENVIRONMENTAL

PATTERSON, Rob (cont'd)

Technical Experience (cont'd)

Over twenty one years experience with EPA and Texas Air Control Board methods of analysis of both stationary and ambient air samples. Particulate matter, SO_3, SO_2, H_2SO_4, NO_x, CO, CO_2, O_2, H_2S, F, TRS, HCl, Cl_2, NH_3, VOC, C_1-C_7, and other organics. Both laboratory and on-site analyses were performed.

Experienced in the sampling and analysis of commercial calibration gas cylinders for sulfur dioxide, oxides of nitrogen, carbon dioxide, oxygen, carbon monoxide, and C_1-C_7 hydrocarbons.

Thoroughly trained in the operation and routine maintenance of the following:

- MSA LIRA Model 202S Infrared Analyzer
- Analytical Instrument Development, Inc. Model 340A Calibration System
- Shimadzu GC-Mini 2 Gas Chromatograph
- Thermo Environmental Model 10AR Oxides of Nitrogen Analyzer
- Thermo Oxygen Analyzer
- Teledyne Model 326 Oxygen Analyzer
- Thermo Environmental Model 48 Carbon Monoxide Analyzer
- Thermo Environmental Model 40 Sulfur Dioxide Analyzer
- Ratfisch Model RS 100 Total Hydrocarbon Analyzer
- Western Research Model 721AT Sulfur Dioxide Analyzer
- Horiba Model PIR 2000 Carbon Dioxide Analyzer
- Ratfisch Model RS 55 Total Hydrocarbon Analyzer
- J.U.M. Model VE-7 Total Hydrocarbon Analyzer

METCO ENVIRONMENTAL

JAMES R. MONFRIES; Senior Quality Assurance Manager

Education	B. S. 1975, University of Texas at Arlington; Arlington, Texas, in Biology with a minor in Chemistry. Graduate work at the University of Texas at Dallas in the Environmental Science Department.
Professional Training Courses	Attended a two-day short course, "Performing and Observing Source Sampling" in Dallas, Texas, July 1976.
Certification	Qualified Individual (Groups I, II, III, and IV) Certified Visible Emissions Evaluator
Professional Memberships	Air and Waste Management Association Source Evaluation Society - Past President
Technical Experience	Participated in the sampling of over 700 sources, serving in the supervisory capacity on over 500 sources. Many of the sources were sampled simultaneously using more than one sampling train at several points in the flue gas stream, 1976-present. Also supervised several ambient air monitoring studies, including a permanent five-station high volume air sampling network in South Texas, a permanent four-station high volume air sampling network in Pennsylvania, and a permanent seven-station sulfur dioxide sampling network in East Texas. Was Quality Assurance Manager for several ambient air monitoring studies; including a four-station high volume air sampling network for TSP and PM10 in Midlothian, Texas; a single-station high volume air sampling network for PM10 in South Texas, a two-station high volume air sampling network for TSP in Wichita Falls, Texas, and a four-station continuous air sampling network for TSP and PM10 in Jewett, Texas using Thermo Andersen FH 62 C14 Beta Gauge Dust Monitors.

(continued)

METCO ENVIRONMENTAL

MONFRIES, James (cont'd)

Thirty years experience with EPA and Texas Commission on Environmental Quality methods of analysis of both source and ambient air samples for particulates, SO_2, SO_3, H_2SO_4, H_2S, HCl, Cl_2, NO_x, Hydrocarbons, and TRS.

Experienced in the analysis of commercial calibration gas cylinders for sulfur dioxide and oxides of nitrogen.

Experienced with VOST and Modified Method 5 Sampling Procedures.

Thoroughly trained in the operation and routine maintenance of the following:

- Lear Siegler, Inc. SM800 Stack Gas Monitor
- Du Pont Model 460/1 Photometric Analyzer System
- Lear Siegler, Inc. SM1000 Ambient SO_2 Monitor
- Calibrated Instruments Ultragas SO_2 Monitor
- Meloy 285E SO_2 Analyzer
- Meloy SA-700 Fluorescent SO_2 Analyzer
- MSA LIRA Model 202S Infrared Analyzer
- Analytical Instrument Development, Inc. Model 340A Calibration System
- Shimadzu GC-Mini 2 Gas Chromatograph
- Thermo Environmental Model 10S NO_x Analyzer
- Thermo Oxygen Analyzer
- Teledyne Model 326 Oxygen Analyzer
- Thermo Environmental Model 48 Carbon Monoxide Analyzer
- Thermo Environmental Model 40 Sulfur Dioxide Analyzer
- Ratfisch Model RS 103 Total Hydrocarbon Analyzer
- Western Research Model 721AT Sulfur Dioxide Analyzer
- Horiba Model PIR 2000 Carbon Dioxide Analyzer
- Ratfisch Model RS 55 Total Hydrocarbon Analyzer
- J.U.M. Model VE-7 Total Hydrocarbon Analyzer
- Thermo Andersen Model FH 62 C14 Dust Monitor

METCO ENVIRONMENTAL

JOHN CUTAIA; Project Supervisor

Education	Over ten (10) years of experience using Methods 1, 2, 3, 4, 5, 6, 7, 9, 10, 11, 24, 29, 201A. Analyzers used: Thermo 43A, 51, 48C, 42C, Servomex 1400, 1400C; Fuj. 3300, Horiba VIA-510, Western 721, Rosemont 951A
Technical Experience	Participated in the sampling of over 150 sources, including several of which were sampled simultaneously using more than one sampling train. Thoroughly trained in all EPA testing procedures, 2005-present.

KYLE GILBERT; Environmental Scientist III

Education	B. S. in Biology, August 2007; Stephen F. Austin State University, Nacogdoches, Texas.
Technical Experience	Participated in the sampling of over 100 sources, including several of which were sampled simultaneously using more than one sampling train. Thoroughly trained in all EPA testing procedures, 2007-present.

METCO ENVIRONMENTAL

SAMUEL A. MORRIS; Environmental Scientist II

Education	B.S. (Biological Sciences) May 2007, Louisiana State University; Baton Rouge, Louisiana.
Technical Experience	Participated in the sampling of over 50 sources, including several of which were sampled simultaneously using more than one sampling train. Thoroughly trained in all EPA testing procedures, 2008-present.

WILLIAM W. STARKEY; Environmental Scientist II

Education	Computer Science, May 2003 – Albany, Louisiana. 1-1/2 years of testing experience
Technical Experience	Participated in the sampling of over 50 sources, including several of which were sampled simultaneously using more than one sampling train. Thoroughly trained in all EPA testing procedures, 2007-present.

METCO ENVIRONMENTAL

BIPPERT, Landon; Environmental Scientist I

Education	Bio Environmental Science, December 2008; Texas A&M University, College Station, Texas.
Technical Experience	Participated in the sampling of over 25 sources, including several of which were sampled simultaneously using more than one sampling train. Thoroughly trained in all EPA testing procedures, 2009-present.