THE LEMONT REFINERY (Overall Block Flow Diagram)

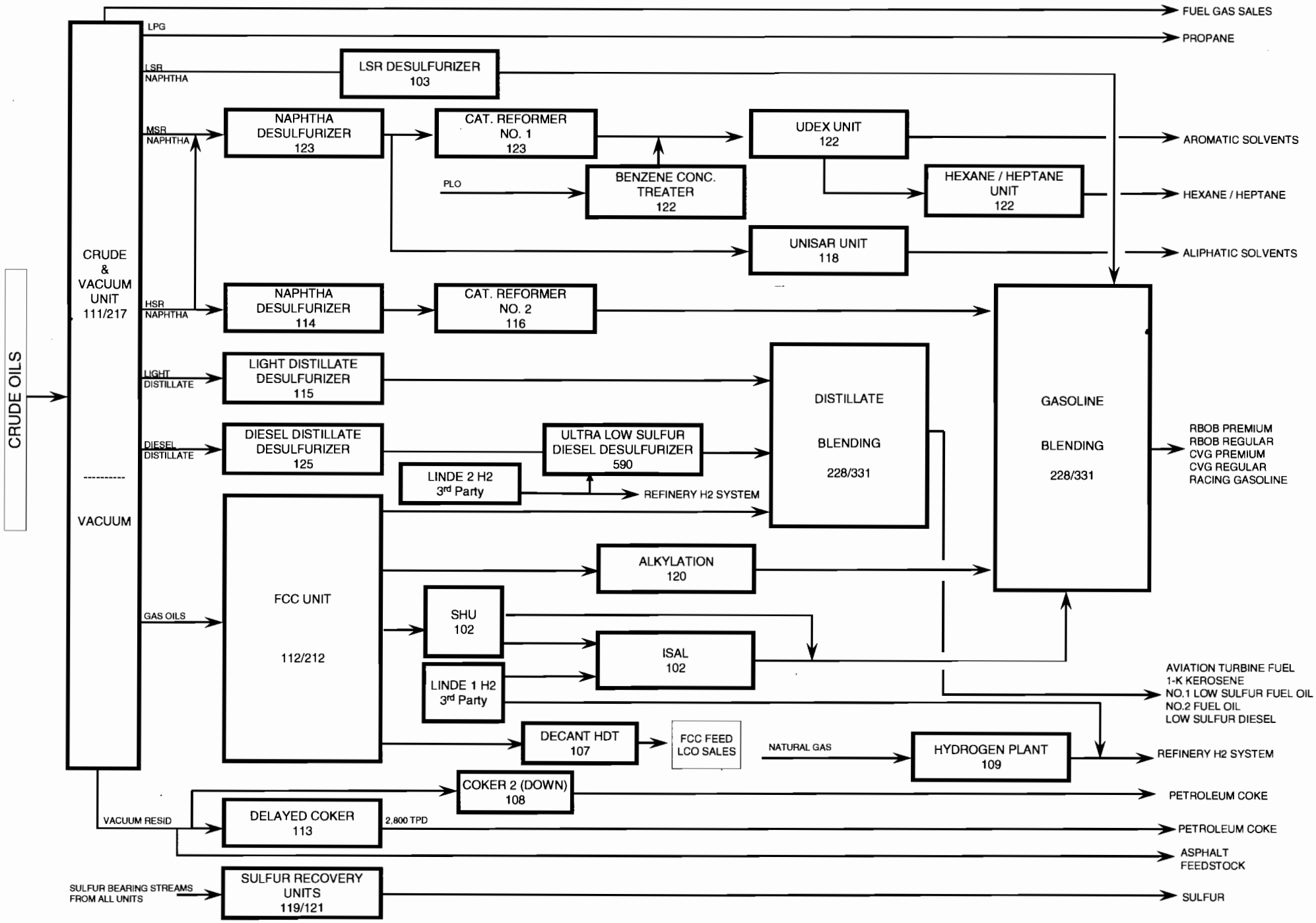

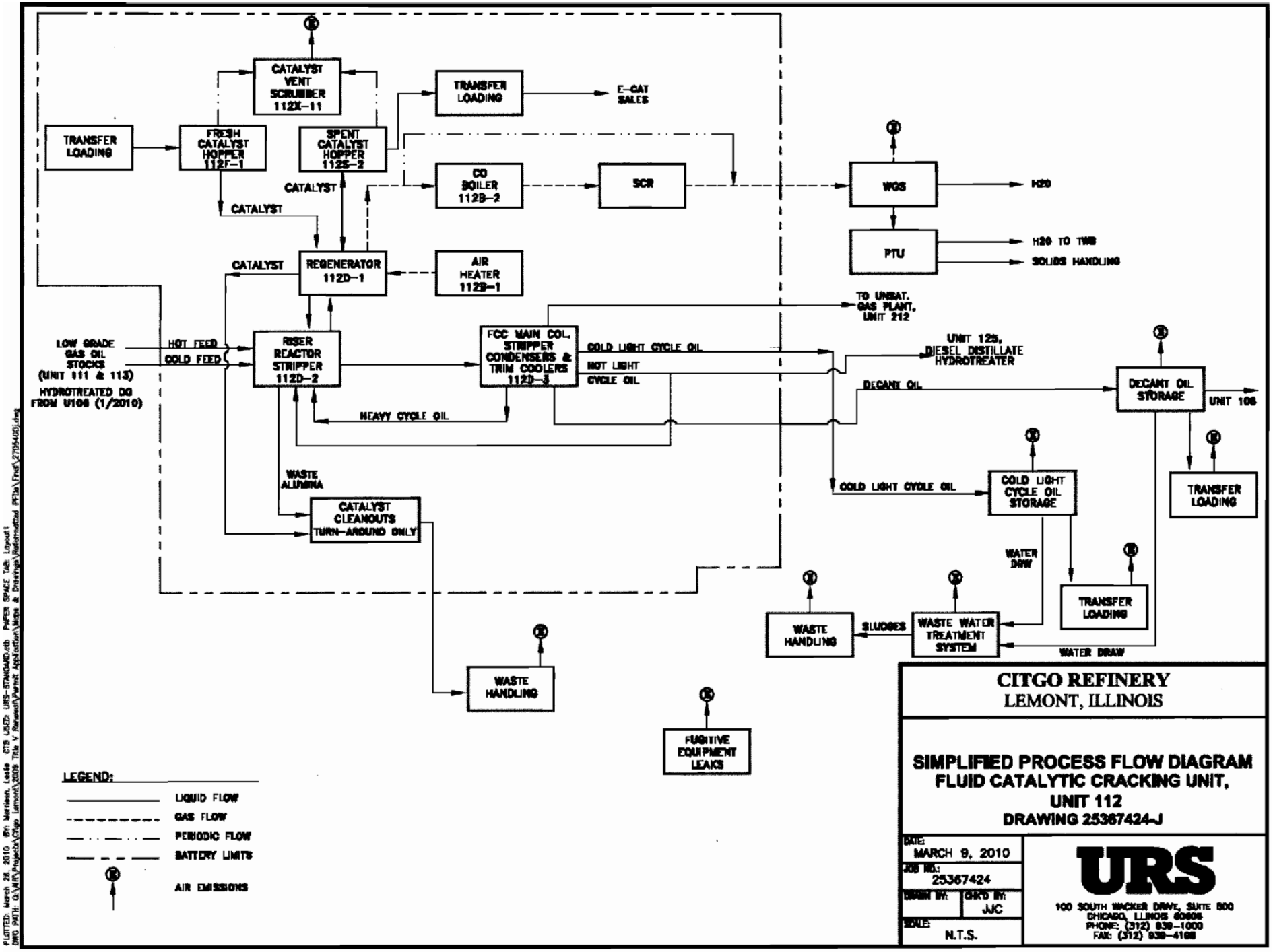

CITGO REFINERY
LEMONT, ILLINOIS

SIMPLIFIED PROCESS FLOW DIAGRAM
FLUID CATALYTIC CRACKING UNIT,
UNIT 112
DRAWING 25367424-J

DATE: MARCH 9, 2010	
JOB NO.: 25367424	
DRAWN BY:	CHK'D BY: JJC
SCALE: N.T.S.	

URS
100 SOUTH WACKER DRIVE, SUITE 500
CHICAGO, ILLINOIS 60606
PHONE: (312) 939-1000
FAX: (312) 939-4198

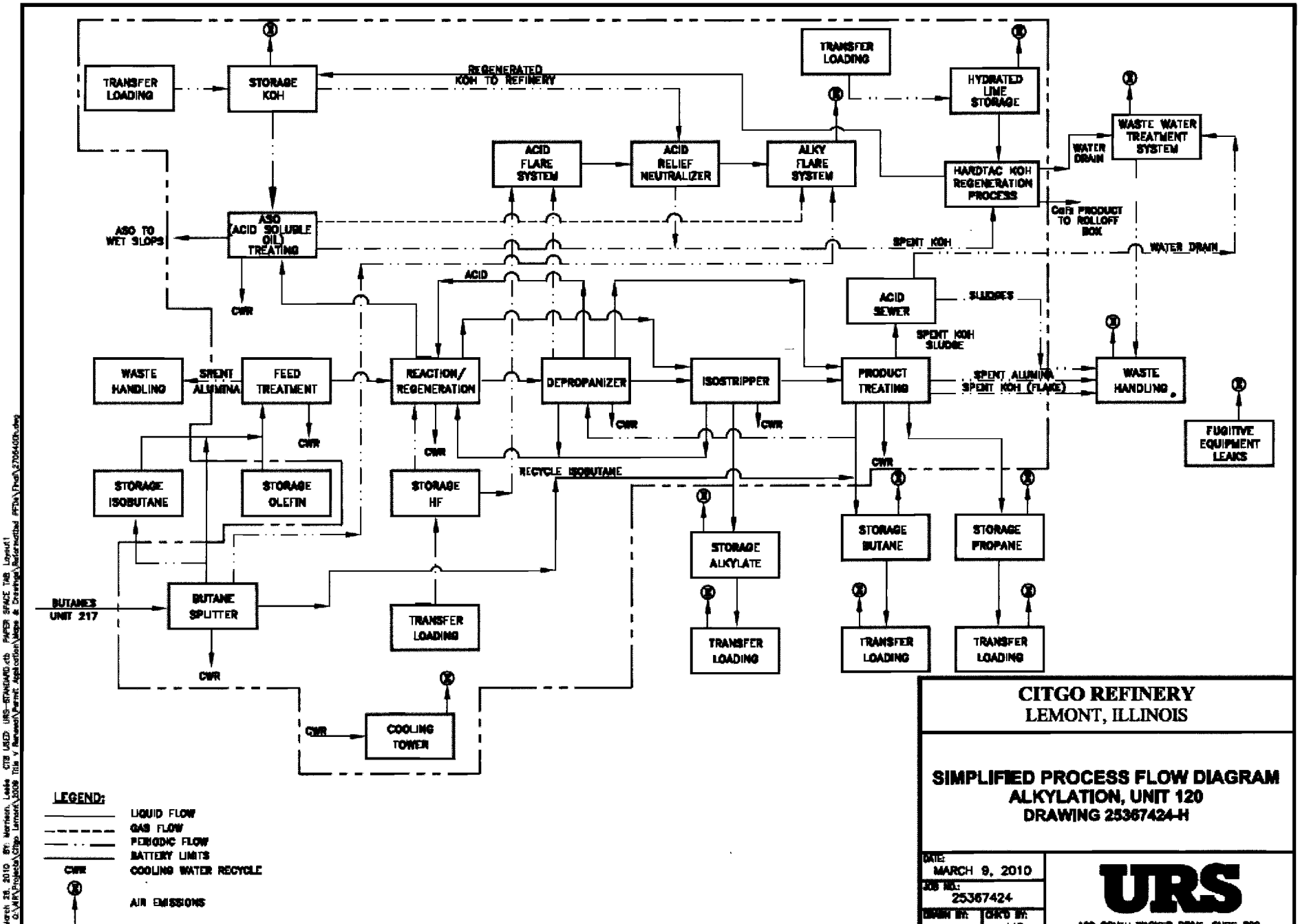

CITGO REFINERY
LEMONT, ILLINOIS

SIMPLIFIED PROCESS FLOW DIAGRAM
ALKYLATION, UNIT 120
DRAWING 25367424-H

DATE: MARCH 9, 2010	
JOB NO.: 25367424	
DRAWN BY:	CHK'D BY: JJC
SCALE: N.T.S.	

URS
100 SOUTH WACKER DRIVE, SUITE 500
CHICAGO, ILLINOIS 60606
PHONE: (312) 939-1000
FAX: (312) 939-4198

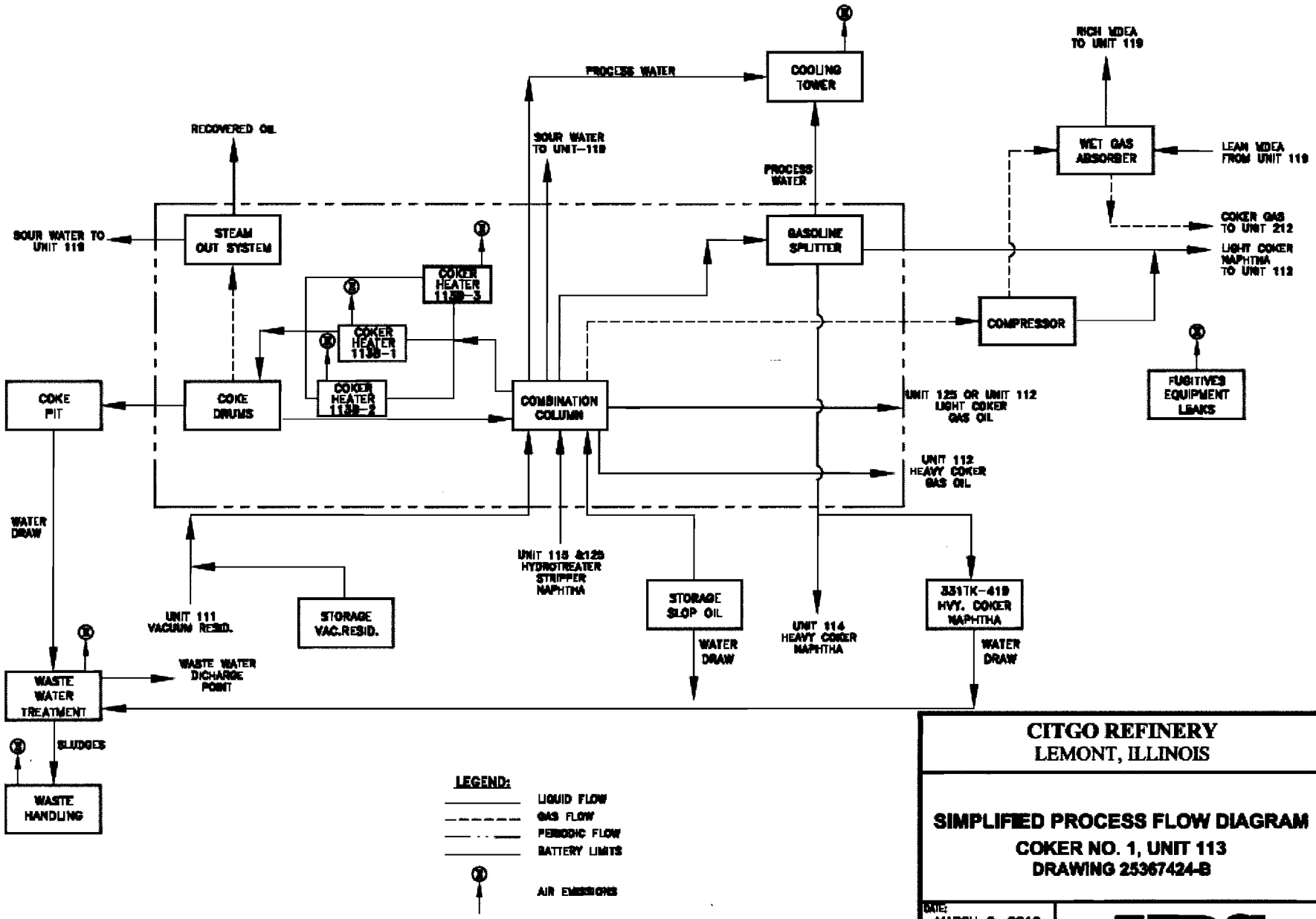

CITGO REFINERY
LEMONT, ILLINOIS

SIMPLIFIED PROCESS FLOW DIAGRAM
COKER NO. 1, UNIT 113
DRAWING 25367424-B

DATE: MARCH 9, 2010	
JOB NO.: 25367424	
DRAWN BY:	CHK'D BY: JJC
SCALE: N.T.S.	

URS
100 SOUTH WACKER DRIVE, SUITE 500
CHICAGO, ILLINOIS 60606
PHONE: (312) 939-1000
FAX: (312) 939-4198

PLOTTED: March 26, 2010 BY: Morrison, Leslie CTB USED: URS-STANDARD.ctb PAPER SPACE TAB Layout1
DWG PATH: Q:\ATK\Projects\Citgo Lemont\2006 Title V Renewal\Permit Application\Maps & Drawings\Referential PFDs\Thaft\27054006.dwg

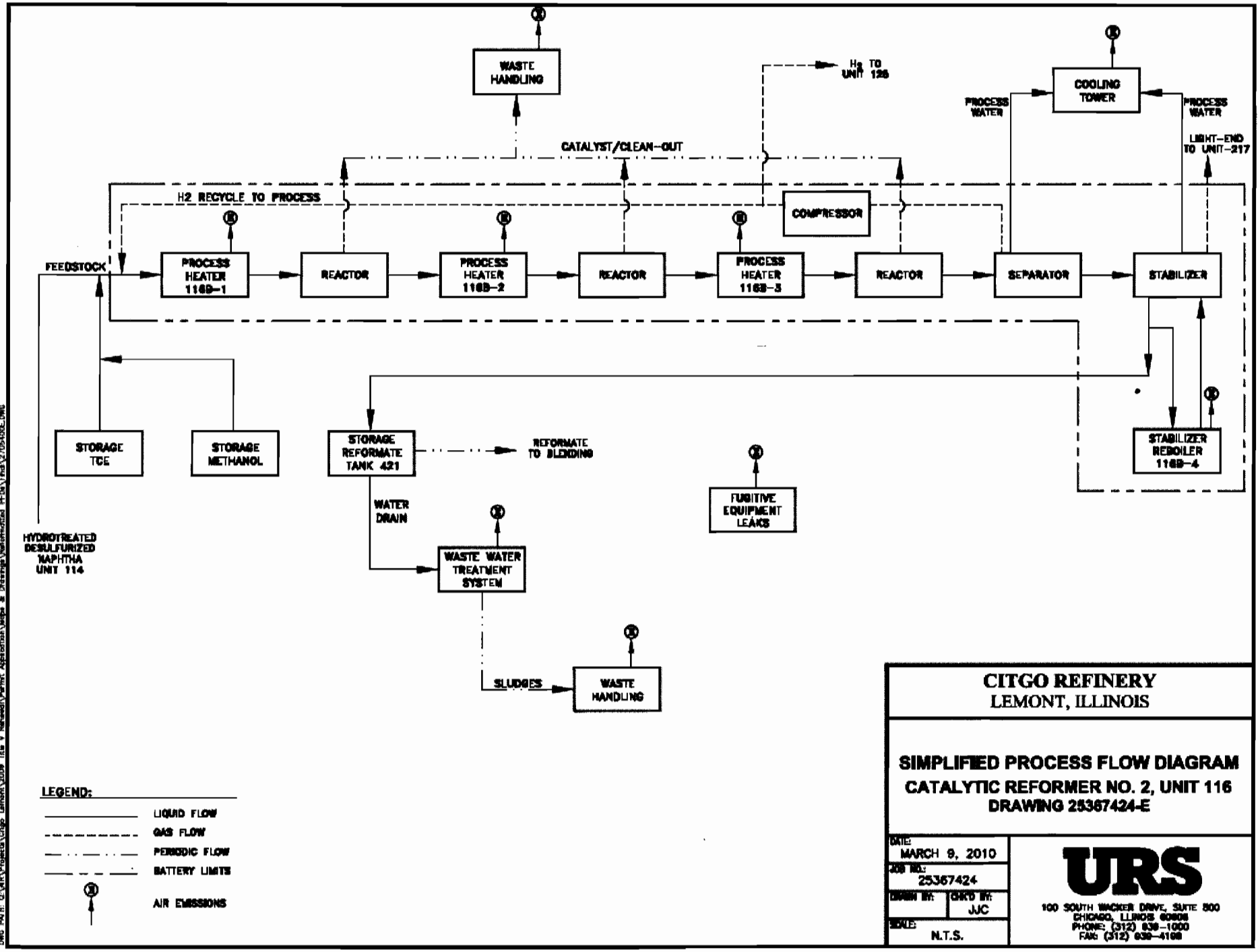

CITGO REFINERY
LEMONT, ILLINOIS

SIMPLIFIED PROCESS FLOW DIAGRAM
CATALYTIC REFORMER NO. 2, UNIT 116
DRAWING 25367424-E

DATE: MARCH 9, 2010	
JOB NO.: 25367424	
DRAWN BY:	CHK'D BY: JJC
SCALE: N.T.S.	

URS
100 SOUTH WACKER DRIVE, SUITE 800
CHICAGO, ILLINOIS 60606
PHONE: (312) 939-1000
FAX: (312) 939-4198

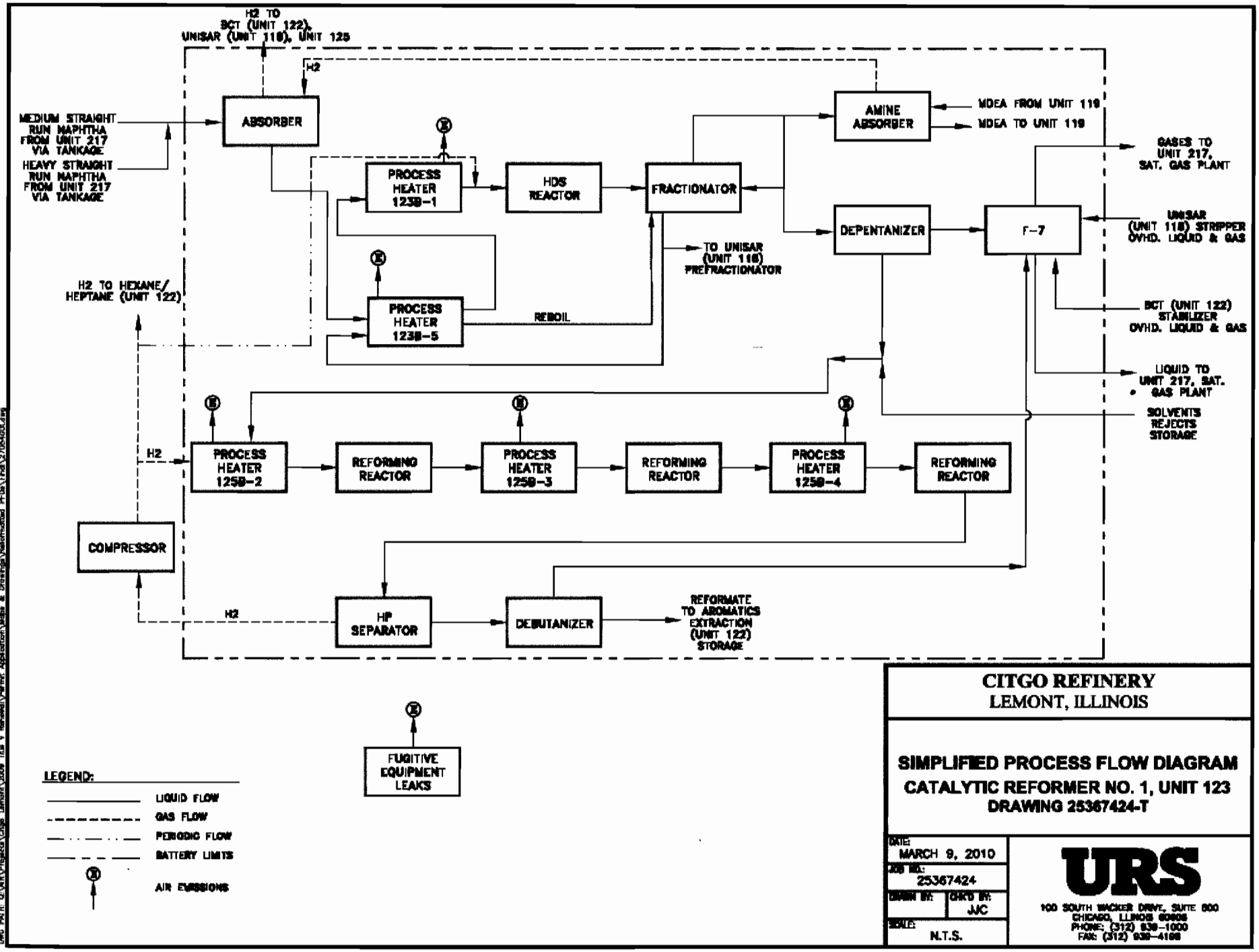

CITGO REFINERY
LEMONT, ILLINOIS

SIMPLIFIED PROCESS FLOW DIAGRAM
CATALYTIC REFORMER NO. 1, UNIT 123
DRAWING 25367424-T

DATE: MARCH 9, 2010	
JOB NO.: 25367424	
DRAWN BY:	CHK'D BY: JJC
SCALE: N.T.S.	

URS
100 SOUTH WACKER DRIVE, SUITE 800
CHICAGO, ILLINOIS 60606
PHONE: (312) 939-1000
FAX: (312) 939-4168

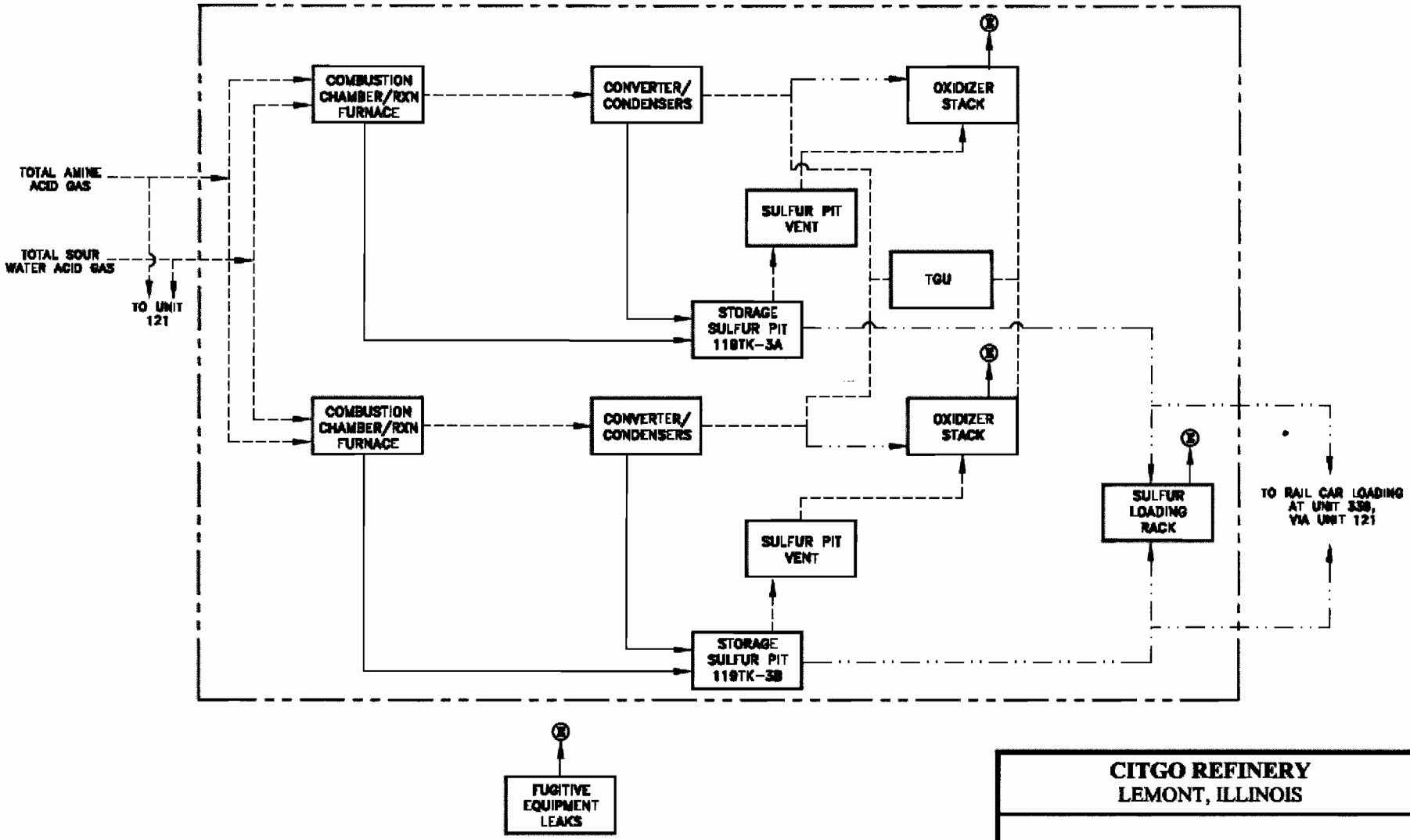

LEGEND:

- LIQUID FLOW
- GAS FLOW
- PERIODIC FLOW
- BATTERY LIMITS
- AIR EMISSIONS

CITGO REFINERY
LEMONT, ILLINOIS

SIMPLIFIED PROCESS FLOW DIAGRAM
CLAUS SULFUR RECOVERY
TRAINS A & B, UNIT 119
DRAWING 25367424-L

DATE: MARCH 9, 2010	
JOB NO.: 25367424	
DRAWN BY:	CHK'D BY: JJC
SCALE: N.T.S.	

URS
100 SOUTH WACKER DRIVE, SUITE 500
CHICAGO, ILLINOIS 60606
PHONE: (312) 939-1000
FAX: (312) 939-4108

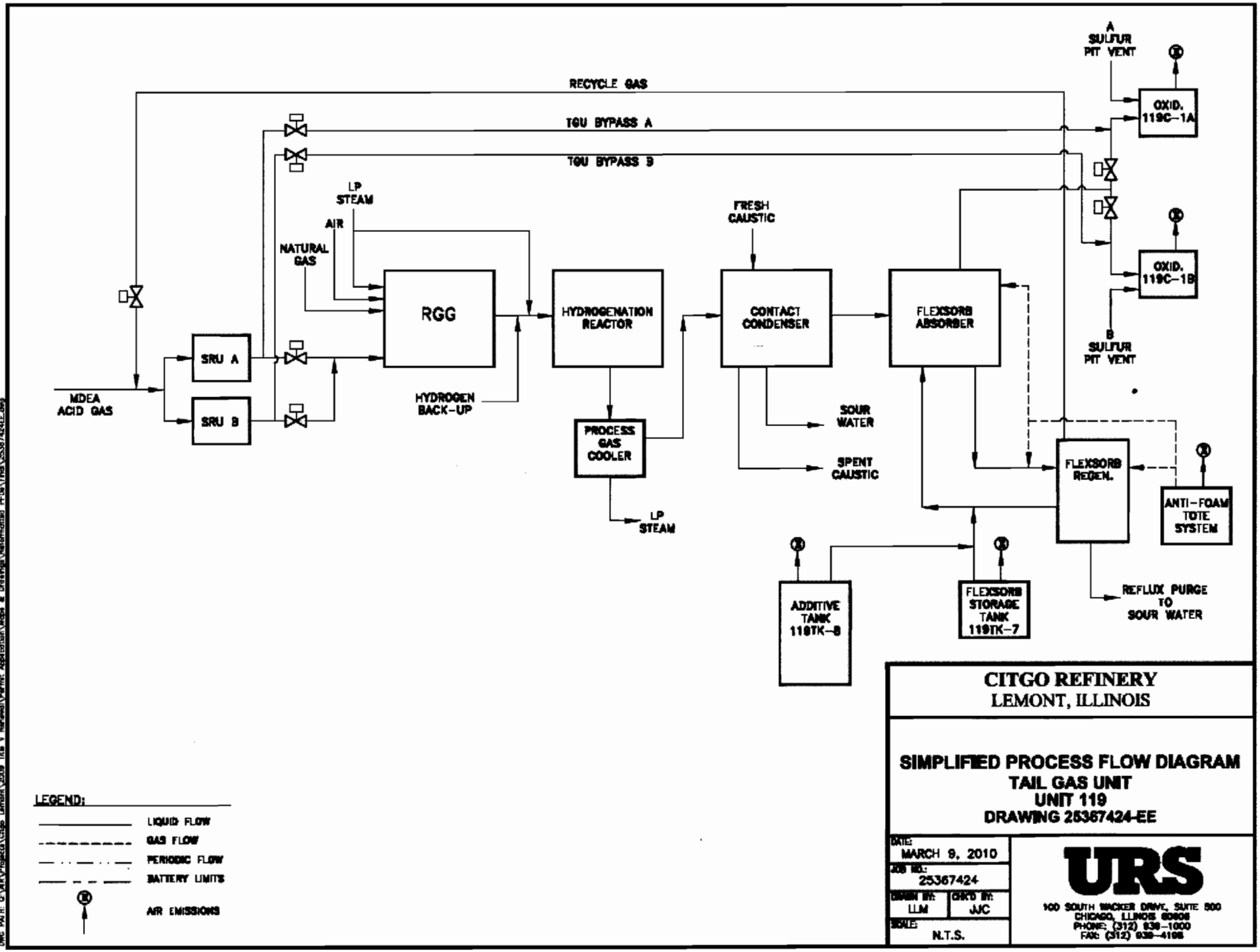

CITGO REFINERY
LEMONT, ILLINOIS

SIMPLIFIED PROCESS FLOW DIAGRAM
TAIL GAS UNIT
UNIT 119
DRAWING 25367424-EE

DATE: MARCH 9, 2010	
JOB NO.: 25367424	
DRAWN BY: LLM	CHK'D BY: JJC
SCALE: N.T.S.	

URS
100 SOUTH WACKER DRIVE, SUITE 500
CHICAGO, ILLINOIS 60606
PHONE: (312) 939-1000
FAX: (312) 939-4198

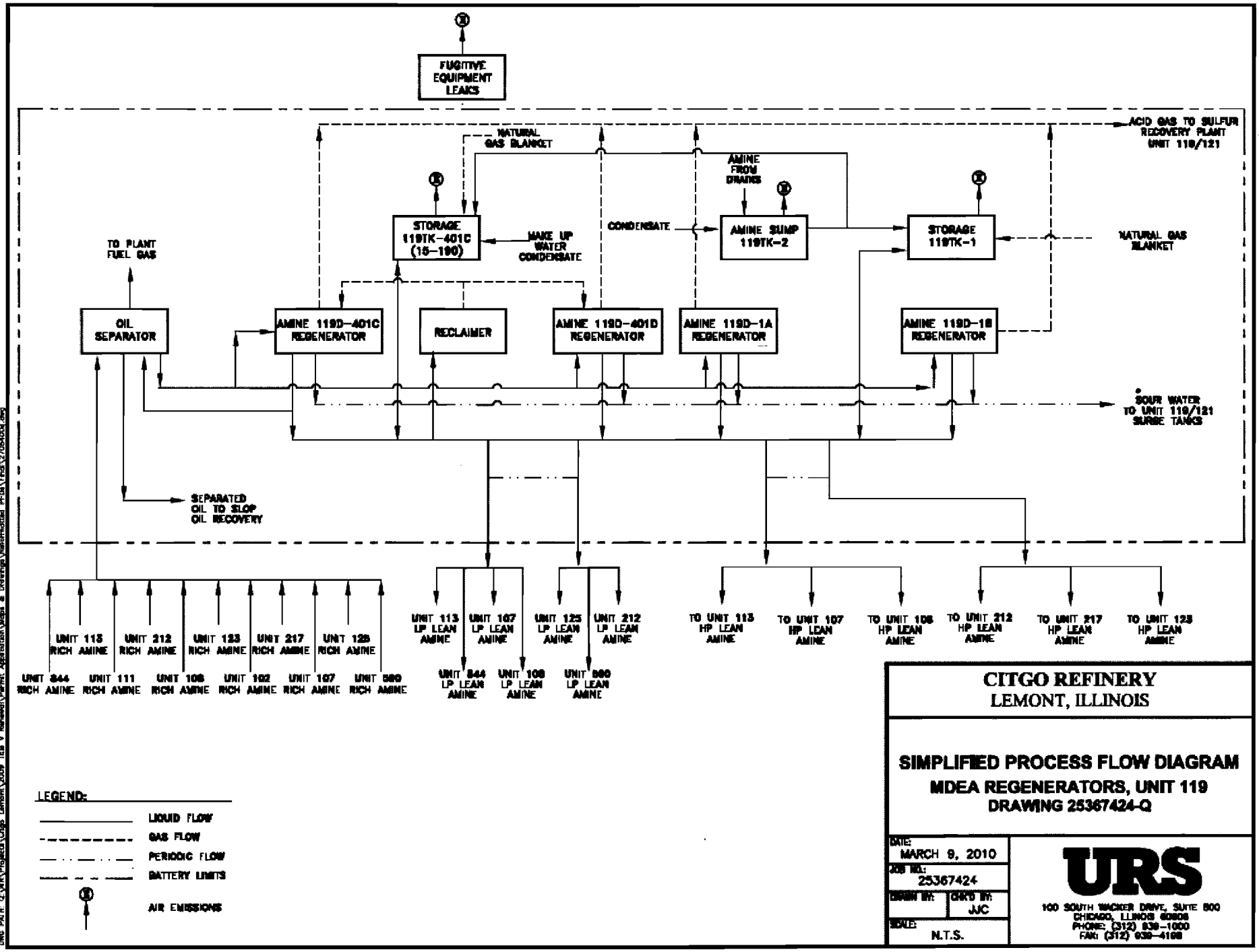

CITGO REFINERY
LEMONT, ILLINOIS

SIMPLIFIED PROCESS FLOW DIAGRAM
MDEA REGENERATORS, UNIT 119
DRAWING 25367424-Q

DATE: MARCH 9, 2010	
JOB NO.: 25367424	
DRAWN BY:	CHK'D BY: JJC
SCALE: N.T.S.	

URS
100 SOUTH WACKER DRIVE, SUITE 800
CHICAGO, ILLINOIS 60606
PHONE: (312) 939-1000
FAX: (312) 939-4198

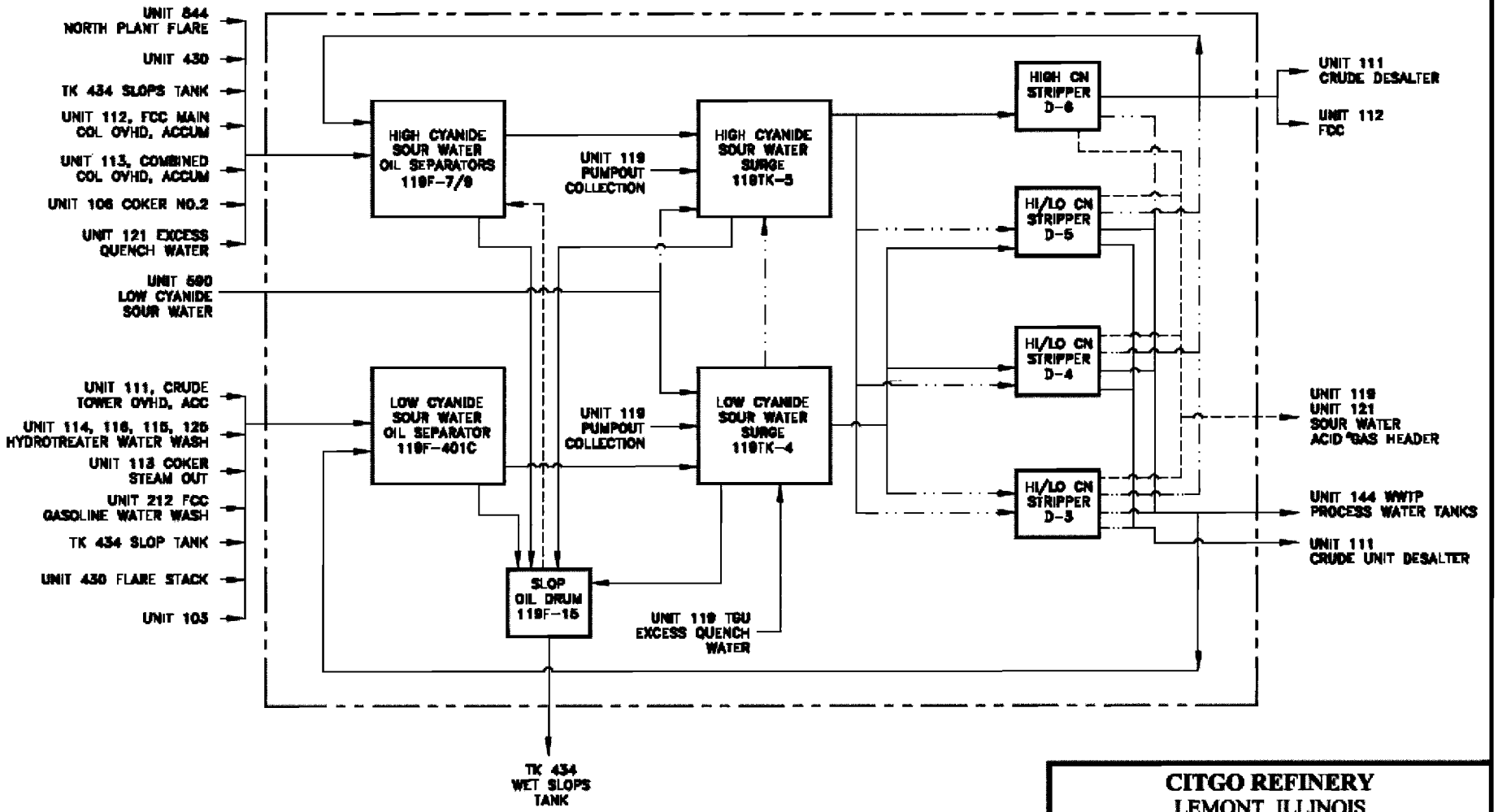

LEGEND:

- LIQUID FLOW
- GAS FLOW
- PERIODIC FLOW
- BATTERY LIMITS
- AIR EMISSIONS

CITGO REFINERY
LEMONT, ILLINOIS

SIMPLIFIED PROCESS FLOW DIAGRAM
SOUR WATER STRIPPERS
UNIT 119
DRAWING 25367424-FF

DATE: MARCH 9, 2010	
JOB NO.: 25367424	
DRAWN BY: LLM	CHK'D BY: JJC
SCALE: N.T.S.	

URS
100 SOUTH WACKER DRIVE, SUITE 800
CHICAGO, ILLINOIS 60606
PHONE: (312) 939-1000
FAX: (312) 939-4168

PLOTTED: March 5, 2010 BY: Morrison, Leslie CTB USED: URS-STANDARD.ctb PAPER SPACE TAB: Layout1
DWG PATH: Q:\AIR\Projects\Citgo Lemont\3009 Title V Renewal\Permit Application\Maps & Drawings\Watermodified PFDs\Final\25367424FF.dwg

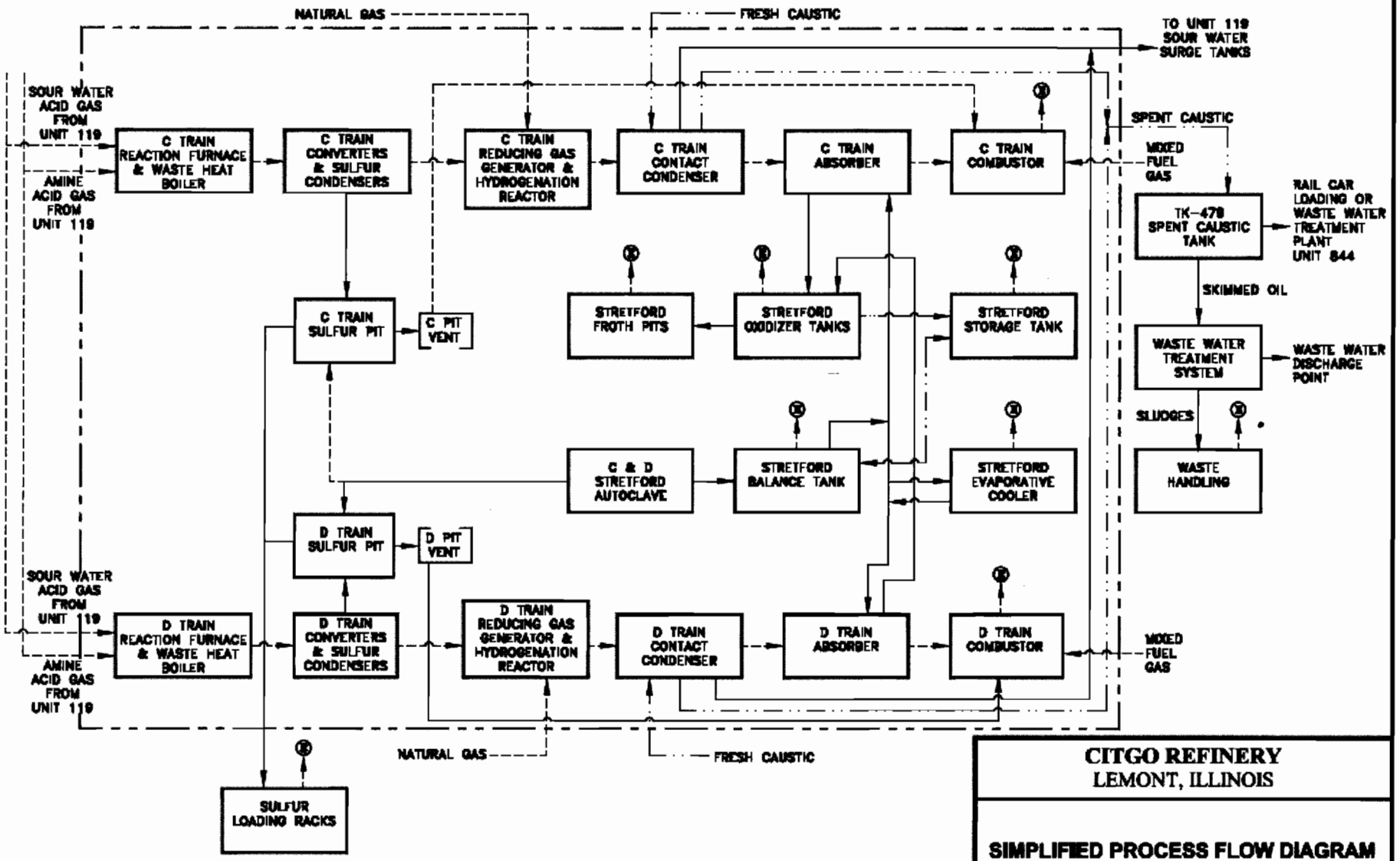

CITGO REFINERY
LEMONT, ILLINOIS

SIMPLIFIED PROCESS FLOW DIAGRAM
SRU/BEAVON STRETFORD C&D TRAINS
UNIT 121
DRAWING 25367424-DD

DATE: MARCH 9, 2010	
JOB NO.: 25367424	
DRAWN BY: LLM	CHK'D BY: JJC
SCALE: N.T.S.	

URS
100 SOUTH WACKER DRIVE, SUITE 500
CHICAGO, ILLINOIS 60606
PHONE: (312) 939-1000
FAX: (312) 939-4198

PLOTTED: March 8, 2010 BY: Morrison, Leslie CTB USED: URS-STANDARD.ctb PAPER SPACE TAB: Layout1
DWG PATH: Q:\AIR\Projects\Citgo Lemont\2009 Title V Renewal\Permit Application\Maps & Drawings\Reformatted IFDs\Final\25367424-DD.dwg

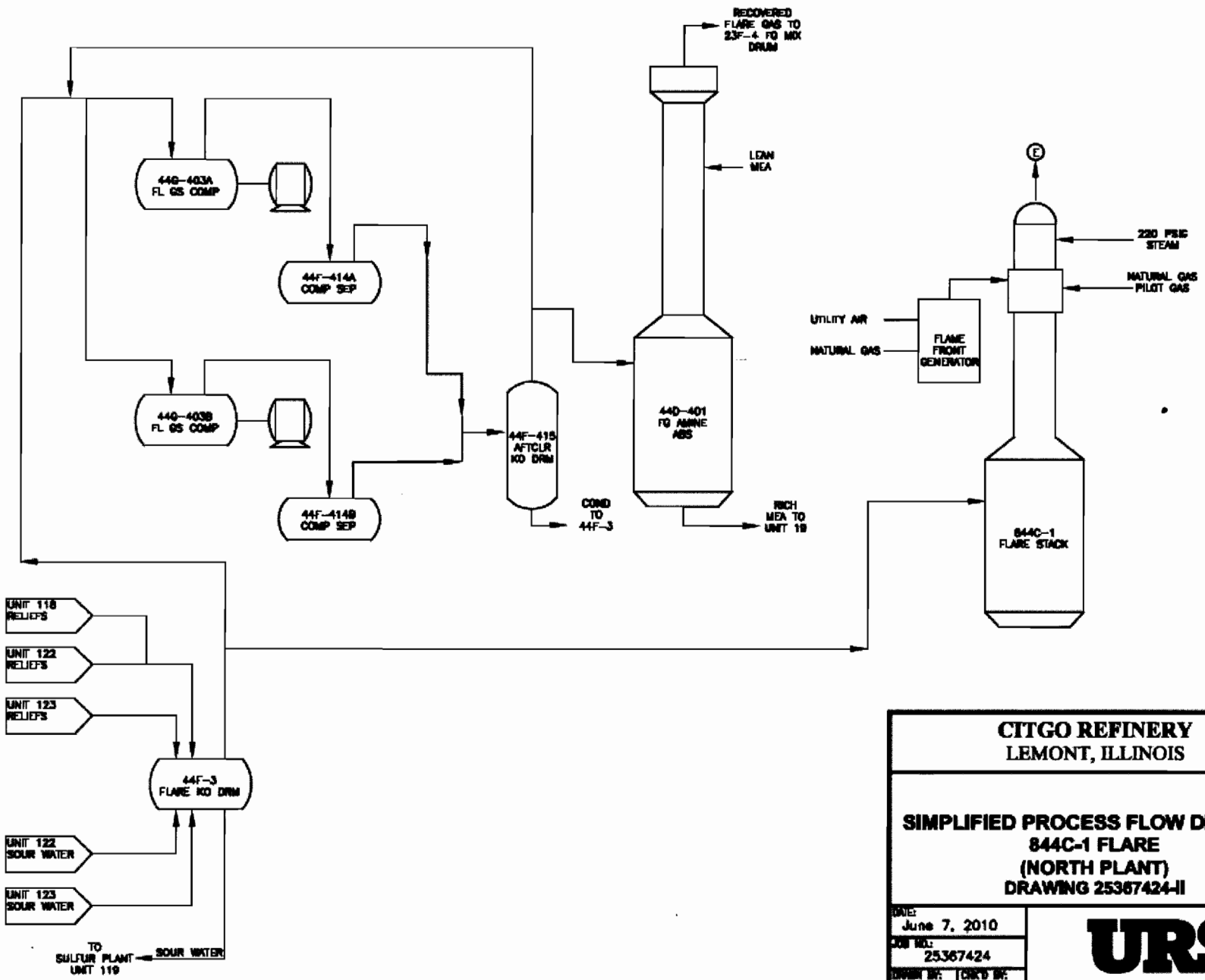

CITGO REFINERY
LEMONT, ILLINOIS

SIMPLIFIED PROCESS FLOW DIAGRAM
844C-1 FLARE
(NORTH PLANT)
DRAWING 25367424-II

DATE: June 7, 2010	
JOB NO.: 25367424	
DRAWN BY: LLM	CHK'D BY: JJC
SCALE: N.T.S.	

URS
100 SOUTH WACKER DRIVE, SUITE 500
CHICAGO, ILLINOIS 60606
PHONE: (312) 939-1000
FAX: (312) 939-4188

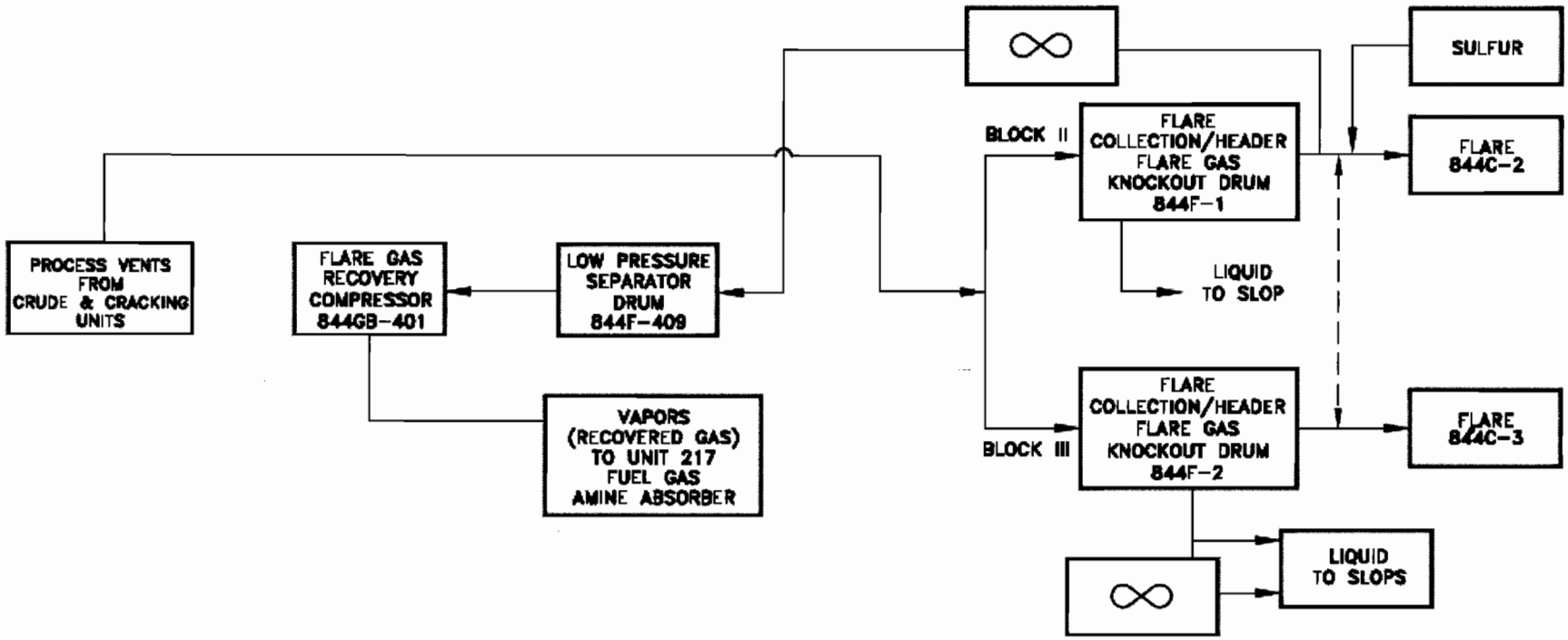

CITGO REFINERY
LEMONT, ILLINOIS

SIMPLIFIED PROCESS FLOW DIAGRAM
SOUTH PLANT FLARE GAS
RECOVERY SYSTEM, UNIT 844
DRAWING 25367424-Y

DATE: MARCH 9, 2010	
JOB NO.: 25367424	
DRAWN BY:	CHK'D BY: JJC
SCALE: N.T.S.	

URS
100 SOUTH WACKER DRIVE, SUITE 500
CHICAGO, ILLINOIS 60606
PHONE: (312) 939-1000
FAX: (312) 939-4188

PLOTTED: March 17, 2010 BY Morrison, Leslie CTB USED: URS-STANDARD.ctb PAPER SPACE TAB: Layout1
DWG PATH: G:\ABR\Projects\Citgo Lemont\2009 Title V Renewal\Permit Application\Maps & Drawings\Reformatted PFDs\Final\25367424Y.dwg

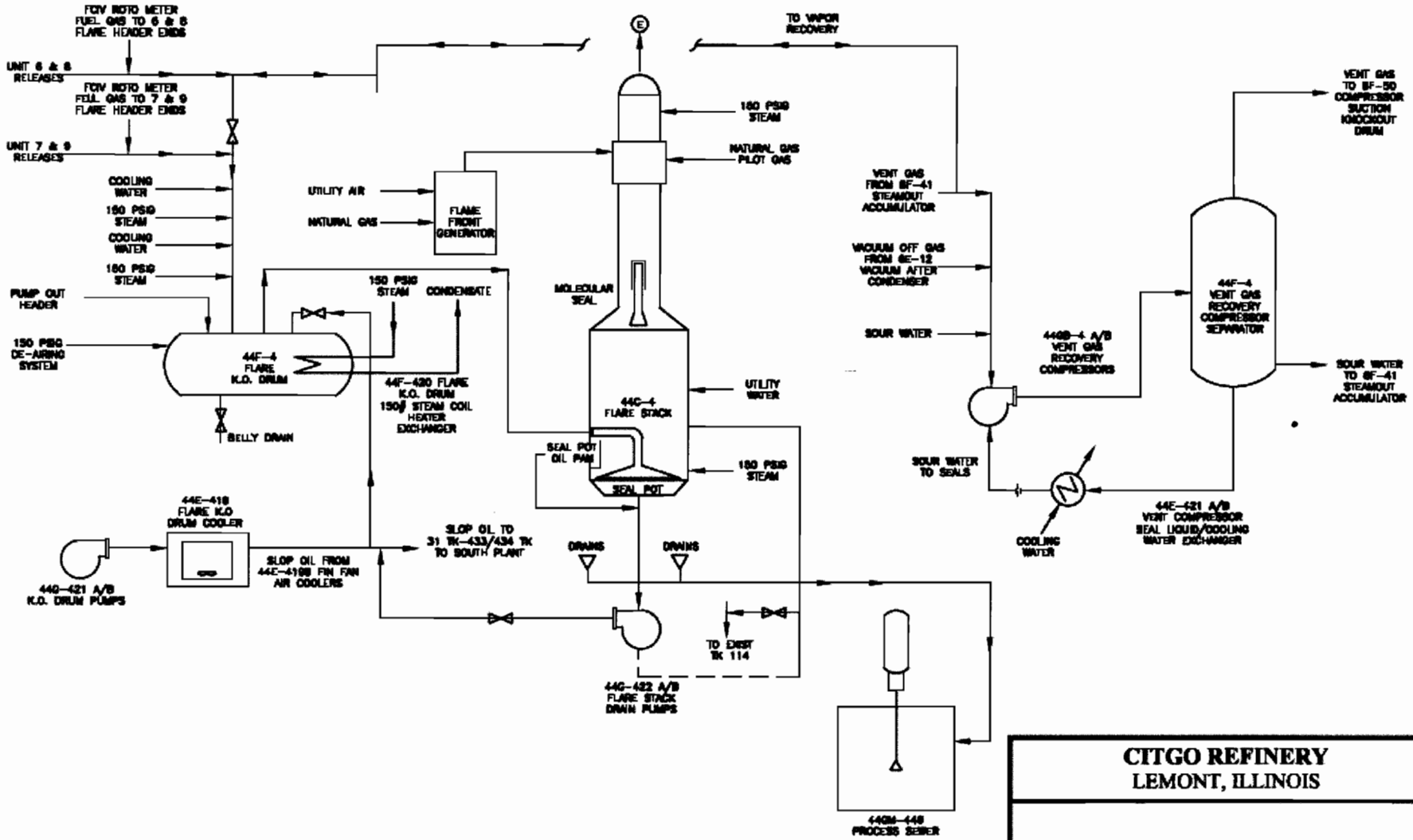

CITGO REFINERY
LEMONT, ILLINOIS

SIMPLIFIED PROCESS FLOW DIAGRAM
844C-4 FLARE
(COKER 2)
DRAWING 25367424-JJ

DATE: June 4, 2010	
JOB NO.: 25367424	
DRAWN BY: LLM	CHK'D BY: JJC
SCALE: N.T.S.	

URS
100 SOUTH WACKER DRIVE, SUITE 600
CHICAGO, ILLINOIS 60606
PHONE: (312) 939-1000
FAX: (312) 939-4198

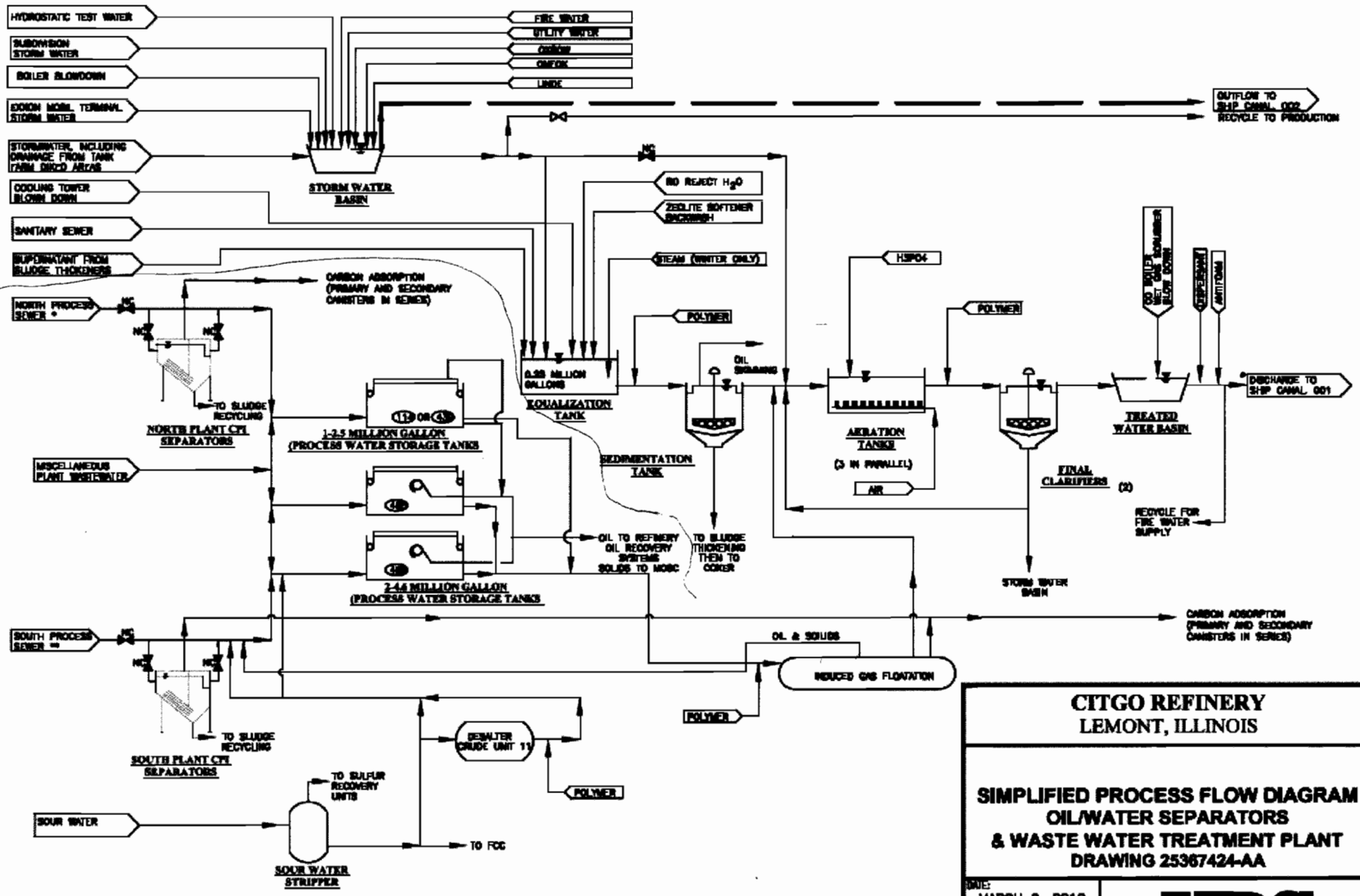

CITGO REFINERY
LEMONT, ILLINOIS

SIMPLIFIED PROCESS FLOW DIAGRAM OIL/WATER SEPARATORS & WASTE WATER TREATMENT PLANT DRAWING 25367424-AA

DATE: MARCH 9, 2010	
JOB NO.: 25367424	
DRAWN BY:	CHK'D BY: JJC
SCALE: N.T.S.	

URS
100 SOUTH WACKER DRIVE, SUITE 500
CHICAGO, ILLINOIS 60606
PHONE: (312) 939-1000
FAX: (312) 939-4198