 Certified 7008-0500-0000-2248-2625

ORANGE COUNTY
DEPARTMENT OF PUBLIC WORKS
DIVISION OF ENVIRONMENTAL FACILITIES & SERVICES

Edmund A. Fares, P.E.
Commissioner

Peter S. Hammond
Deputy Commissioner

www.orangecountygov.com
2455-2459 Route 17M, P.O. Box 637
Goshen, New York 10924-0637
TEL: (845) 291-2640 • FAX: (845) 291-2665

Edward A. Diana
County Executive

March 19, 2009

Mr. Jacob Gluk
Water Superintendent
Village of Kiryas Joel, Water Department
P.O. Box 626,
Monroe, NY 10949

Re: Issuance of Industrial Wastewater Discharge Permit No. 005-09

Dear Mr. Gluk:

As required by the United States Environmental Protection Agency (USEPA), enclosed are two copies of the Industrial Wastewater Discharge Permit for the Village of Kiryas Joel, Water Treatment Plant. This Industrial Wastewater Discharge Permit outlines the rules and requirements, including mandatory sampling and reporting requirements for your facility with regard to the wastewater discharge that is received by the Harriman Wastewater Treatment Facility. Failure to comply with this Industrial Wastewater Discharge Permit may impact your ability to continue to utilize the sanitary sewer system.

In addition, attached is a copy of your Periodic Compliance Report (PCR) forms to be completed and submitted to Orange County in July and January of each year. Please note your first PCR submittal is due on or before July 30, 2009.

The effective date of this permit is January 31, 2009. The permit shall be effective for a three year period. Any comments regarding this permit must be submitted in writing to the Orange County Department of Public Works, Division of Environmental Facilities and Services prior to January 15, 2009.

If acceptable, please sign both copies of the enclosed permit and return one copy to me at the address below as soon as possible. The permit must be signed by:

(a) a principal executive officer of a least the level of vice-president, if your firm is a corporation;

Mr. Jacob Gluk
March 19, 2009
Page 2

(b) a general partner of proprietor if your firm is a partnership or proprietorship, respectively, or;

(c) a duly designated representative of the individual designated above if such representative is responsible for the overall operation of the facilities from which the discharge originates.

Please attach a facility drawing illustrating the sampling location(s) to your signed Industrial Wastewater Discharge Permit. An onsite sampling manhole(s) for all wastewater discharged by your facility to the sanitary sewer system must be provided and/or installed by the owner. A drawing is enclosed to provide you with details for constructing the sampling manhole, which must be large enough to install a 24-hr composite sampler thru a 24" diameter lid.

There is an Industrial Pretreatment Program discharge permit fee of $2,000.00 for issuing the permit and an annual permit maintenance fee of $750.00 for monitoring, inspecting, reviewing self monitoring reports and surveillance procedures. Additional charges will be billed directly for laboratory testing, surcharges for exceeding permit limits and any other reasonable expenses, which Orange County Department of Public Works may deem necessary to carry out the industrial pretreatment program to satisfy the requirements of the Orange County Sewer Use Law, the NYSDEC and USEPA.

Please provide payment of $2,750.00 along with your signed permit by May 1, 2009. Please make your check for $2,750.00 payable to Orange County Sewer District No. 1.

Orange County DPW – Division of Environmental Facilities and Services appreciates your cooperation with the pretreatment program. If you have any questions regarding this letter, please give me a call.

Best Regards,

Orange County DPW – Division of Environmental Facilities and Services

Peter S. Hammond
Deputy Commissioner

Encl.
cc: Anthony R. Griffin, P.E., Principal Sanitary Engineer
File

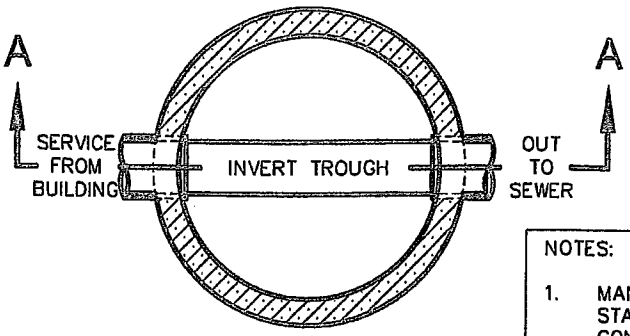

PLAN VIEW

NOTES:

1. MANHOLES SHALL BE STANDARD REINFORCED CONCRETE SECTIONS 24" I.D. x 4'-0". IF MORE THAN ONE SECTION IS USED, INSTALL RAMNEK AT JOINTS.

2. INSTALL RAMNEK SEAL UNDER COVER FRAME ENTIRELY AROUND MANHOLE.

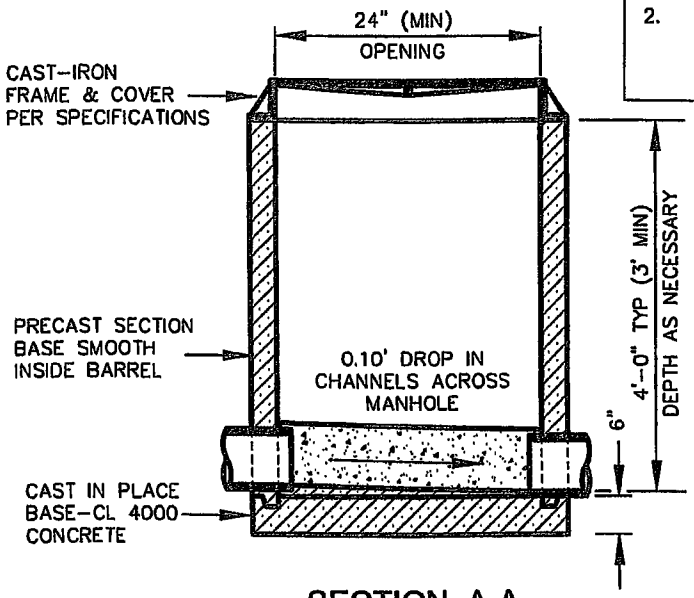

SECTION A-A

SANITARY SAMPLING MANHOLE DETAIL

ORANGE COUNTY
DEPARTMENT OF PUBLIC WORKS
DIVISION OF ENVIRONMENTAL FACILITIES & SERVICES

Edmund A. Fares, P.E.
Commissioner

Peter S. Hammond
Deputy Commissioner

Edward A. Diana
County Executive

www.orangecountygov.com
2455-2459 Route 17M, P.O. Box 637
Goshen, New York 10924-0637
TEL: (845) 291-2640 • FAX: (845) 291-2665

INDUSTRIAL WASTEWATER DISCHARGE PERMIT
NON SIGNIFICANT INDUSTRIAL USER

PERMIT NUMBER: 005-01 EFFECTIVE DATE: January 31, 2009

SIC CODE: 2656 EXPIRATION DATE: January 31, 2012

In compliance with Orange County Local Sewer Use Law of 2006, the Orange County Department of Public Works issues this permit to the following facility:

VILLAGE OF KIRYAS JOEL, WATER DEPARTMENT
NAME OF COMPANY

PO BOX 626

MONROE, NEW YORK 10949
ADDRESS OF COMPANY FACILITY DISCHARGING WASTEWATER

A. EFFLUENT LIMITATIONS

The wastewater discharge of the Permittee shall be limited by the concentration limits defined in Section 9.4 of the Local Sewer Use Law and specified below:

TABLE 1
EFFLUENT CONCENTRATION LIMITS AT POINT OF DISCHARGE

Parameter[1]	Maximum Concentration[2] (mg/l)
Ammonia	230

* Copy Here is Not Signed by Pres. 2 Copies that went out were signed by PSH. M

TABLE I EFFLUENT CONCENTRATION LIMITS AT POINT OF DISCHARGE	
Parameter[1]	**Maximum Concentration[2] (mg/l)**
Arsenic	0.16
CBOD[3]	670
Cadmium	0.027
Chromium	0.40
Copper	0.27
Iron	6.9
Lead	0.041
Manganese	1.3
Molybdenum	0.83
Nickel	0.69
Silver	0.37
Sulfate	1,540
Total Phenolics	0.29
TSS[3]	4,800
UOD[3][4]	11,000
Oil & Grease	100
Zinc	0.68

(1) All concentrations listed for metallic substances shall be as "total metal", which shall be defined as the value measured in a sample acidified to a pH value of 2 or less, without prior filtration.

(2) As determined on a composite sample taken from the User's daily discharge over a typical operational and/or production day, except for cyanide, total phenolics, pH, oil and grease which shall be determined using grab samples. The limits for organic pollutants other than those listed in this section and higher than the minimum detection limits as established by 40 CFR Part 136 and/or the current edition of Standard Methods shall be set on a case-by-case basis.

(3) As determined by an average of composite samples taken from the User's daily discharge over an operational and/or production day, within a one month period.

(4) Ultimate Oxygen Demand (UOD) shall be computed as UOD = 1.5 x CBOD5 + 4.5 x TKN

The following wastes shall not be introduced into the public sewer system:

(a) Wastes which create a fire or explosion hazard in the sewer system or treatment works, including but not limited to wastestreams with a closed-cup flashpoint of less than 140°F (60°C) using the test methods specified in 40 CFR 261.21.

(b) Gasoline, benzene, naptha, fuel oil or other flammable or explosive liquid, solid, or gas.

(c) Waters or wastes containing toxic or poisonous solids, liquids, or gases in sufficient quantity, either singly or by interaction with other wastes, which injures or interferes with the integrity of the collection system, any sewage process, constitutes a hazard to humans or animals, creates a public nuisance, or creates any hazard in the receiving waters of the sewage treatment plant.

(d) Wastes which have a pH lower than 5.5 S.U. or higher than 11.0 S.U., or has any corrosive property capable of causing damage or hazard to structures or equipment.

(e) Solid or viscous wastes in amounts which would cause obstruction to the flow in sewers, or other interference with the proper operation of the sewers or the sewage treatment plant.

(f) Wastes at a flow rate and/or pollutant discharge rate which is excessive over relatively short time periods so that there is a treatment process upset or subsequent loss of treatment efficiency at the sewage treatment plant.

(g) Wastes which are prohibited in Section 9.2 of the Orange County Local Sewer Use Law of 2006.

B. MONITORING AND RECORDING

The monitoring of each industrial discharge and the recording of quantitative values shall be performed by the Permittee according to schedules established by the Orange County Department of Public Works utilizing approved methodology. Composite samples shall be collected over the daily duration of discharge including clean-up periods. The composites shall consist of grab samples of 30 minutes during the

operational period, including start-up and clean-up. The flow (in gallons per day) shall be measured during each sampling period. If flow measurement is not practicable, water use records may be substituted in place of flow measurement. The sampling schedule cited below shall become effective on the date of operational compliance specified in this permit.

TABLE 2
SAMPLING SCHEDULE

SAMPLING LOCATION	PARAMETERS	MONITORING FREQUENCY	TYPE OF SAMPLE (grab, composite, continuous)
Final Effluent	Flow	Quarterly	Daily Flow
Discharge	pH	Quarterly	Grab
	Ammonia	Quarterly	Composite
	Total Kjeldahl Nitrogen (TKN)	Quarterly	Composite
	Arsenic	Quarterly	Composite
	$CBOD_5$	Quarterly	Composite
	Cadmium	Quarterly	Composite
	Chromium	Quarterly	Composite
	Copper	Quarterly	Composite
	Iron	Quarterly	Composite
	Lead	Quarterly	Composite
	Manganese	Quarterly	Composite
	Molybdenum	Quarterly	Composite
	Nickel	Quarterly	Composite
	Silver	Quarterly	Composite
	Sulfate	Quarterly	Composite
	Phenolics	Quarterly	Grab
	TSS	Quarterly	Composite
	Zinc	Quarterly	Composite
	Oil & Grease	Quarterly	Grab
	UOD(1)	Quarterly	Composite
	Cyanide	Quarterly	Grab
	TTO(2)	Semi-Annually	Grab

(1) Ultimate Oxygen Demand (UOD) shall be computed as UOD = 1.5 x CBOD5 + 4.5 x TKN

(2) TTO Refers to 40 CFR Part 433.11.

Wastewater samples shall be collected and analyzed by an independent laboratory certified in the parameters being analyzed. Sampling and analysis must be performed in accordance with the techniques described in 40 C.F.R. Part 136 and amendments thereto.

C. REPORTING REQUIREMENTS

SELF MONITORING REPORT - The industrial user shall submit to the Orange County Department of Public Works a Periodic Compliance Report. Such reports shall be submitted Semi-Annually during the months of July and January and shall contain the results of the monitoring required under this permit, as well as any other analytical results from monitoring performed at the sampling locations specified in Section B of this permit. Furthermore, such reports must be submitted consistent with the Signatory and Certification Statement requirements included in Section Q of this permit.

If the results of the permittee's wastewater analysis indicates that a violation of this permit has occurred, the permittee must:

(1) Inform the Orange County Department of Public Works of the violation within 24 hours; and
(2) repeat the sampling and pollutant analysis and submit, in writing, the results of this second analysis within 30 days of the first violation.

D. DILUTION

No industry shall increase the use of potable or process water in any way for the purpose of diluting a discharge as a partial or complete substitute for adequate treatment to achieve compliance with any applicable Federal pretreatment standards or any other limitations set forth in this permit or the Local Sewer Use Law.

E. NOTICE OF NON-COMPLIANCE (Slug Discharges/Accidental Discharge/Emergency Operations)

In the event the Permittee does not comply with or will be unable to comply with any effluent limitation specified in this permit or discharges any slug loading to the sanitary sewer due to:

(1) Breakdown of Industrial Waste Pretreatment Equipment;
(2) Accidents caused by human error or negligence;
(3) Spills, releases, bypasses or process upsets; or
(4) Other causes, such as acts of nature,

the Permittee shall notify the Pretreatment Program Manager forthwith so that the necessary steps to prevent damage to the wastewater collection and treatment system can be taken.

Notification Procedures

(1) In the event of any slug or accidental discharge (as defined above), the permittee shall immediately notify **Orange County Department of Public Works** by telephoning the **Pretreatment Manager** at **845-291-2640** or the **Superintendent of the Harriman Sewage Treatment Plant** at **845-291-2033.**

(2) In addition to the notice provided above, the Permittee shall notify the Manager in writing within five (5) days of the date of occurrence, by a detailed statement including the following pertinent information:

   (1) Cause of noncompliance.
   (2) A description of the noncomplying discharge.
   (3) Anticipated time the condition of noncompliance is expected to continue, or if such condition has been corrected, the duration of the period of noncompliance.
   (4) Steps taken by the Permittee to reduce and eliminate the non-complying discharge; and
   (5) Steps to be taken by the Permittee to prevent recurrence of the condition of noncompliance.

Nothing in this permit shall be construed to relieve the Permittee from the penalties for noncompliance with this permit for any reason subject to the Local Sewer Use Law.

F. CHANGE IN WASTEWATER DISCHARGE

All discharges authorized herein shall comply with the terms and conditions of this permit. Any industrial facility expansions, production increases or process modifications which result in new, different or increased discharges of pollutants must be reported by submission of revised Wastewater Survey Forms. This permit may be modified to specify and limit any pollutants not previously limited. The discharges of any pollutant more frequently than, or at a level in excess of, that specified and authorized by this permit shall constitute a violation of the terms and conditions of this permit.

G. MODIFICATION, SUSPENSION OR REVOCATION OF PERMITS

(a) Industrial Wastewater Discharge Permits may be modified, suspended or revoked whenever the Orange County Department of Public Works finds after a hearing held in conformance with the procedures set forth in Article XII of the Local Sewer Use Law:

1. that the user has violated any term of the permit; or
2. that the user obtained the permit by misrepresentation or failure to disclose fully all relevant facts.

(b) Permits may additionally be modified, suspended or revoked whenever the Orange County Department of Public Works determines that a change in conditions or the existence of a condition at the Harriman Sewage Treatment Plant requires either a temporary or permanent reduction or elimination of the authorized discharge. The Orange County Department of Public Works shall notify affected users of any proposed changes in their permit at least 30 days prior to the effective date of the change. Any changes or new conditions in the permit shall include a reasonable time schedule for compliance. Any user aggrieved by a proposed modification, suspension or revocation of the user's wastewater discharge permit may appeal to the County for relief in accordance with the provisions of Section 12.12 of the Local Sewer Use Law.

(c) If the Orange County Department of Public Works finds that the public health, safety or welfare requires emergency action, and incorporates a finding to that effect in his/her order, summary suspension or modification of a permit may be ordered pending proceedings for modification, suspension, revocation or other action. As soon as possible thereafter, but not to exceed fifteen (15) days, the Orange County Department of Public Works shall provide the affected user an opportunity to be heard in accordance with the hearing provisions of Section 12.12 of the Local Sewer Use Law.

H. RIGHT OF ENTRY

The Permittee shall allow duly authorized employees or representatives of the Orange County Department of Public Works to enter the Permittee's premises for the purpose of inspection, observation, measurement, sampling, and testing in accordance with Section 10.32 of the Local Sewer Use Law.

I. TRANSFER OF PERMIT

Industrial Waste Discharge Permits are issued to a specific User for a specific operation and are non-transferable. In the event of any change in ownership of the industrial facility, the Permittee shall notify the new owner of the existence of the permit by letter, a copy of which shall be forwarded to the Orange County Department of Public Works.

J. PRETREATMENT FACILITIES

The Permittee shall provide and maintain at his expense, all necessary facilities for the pretreatment of industrial wastewaters when required by the Orange County Department of Public Works pursuant to Section 10.25 of the Local Sewer Use Law. All reports, plans and/or specifications for new or modified pretreatment facilities must be submitted to the Orange County Department of Public Works.

K. WASTE MATERIAL DISPOSAL

Any screenings, sludges, solids, waste oils, or other waste materials removed or separated from the Permittee's authorized discharge shall be disposed of in accordance with applicable Federal, State and local regulations and prevented from entering the wastewater treatment system. The following data shall be reported to the Orange County Department of Public Works as part of the semi-annual reports.

(a) The sources of materials to be disposed of.
(b) The approximate volumes and weights.
(c) The method by which they were removed and transported.
(d) The company contracted to remove such materials.
(e) The final disposal or recovery location.

L. MONITORING FACILITY REQUIREMENTS

If, in the opinion of the Orange County Department of Public Works, there are not adequate facilities where representative samples can be obtained and accurate flow measurement taken, the Orange County Department of Public Works can require that monitoring facilities be installed by the Permittee at his expense in accordance with Section 10.18 of the Local Sewer Use Law.

M. SCHEDULE OF COMPLIANCE

(a) Periodic Compliance Report Schedule.

The permittee shall submit semiannual Periodic Compliance Reports (PCRs) in accordance with the timetable established below:

TABLE 3 - PCR SUBMITTALS		
Period Covered		
Beginning	Ending	Date PCR is due
January 1	March 31	
April 1	June 30	July 30
July 1	September 30	
October 1	December 31	January 30

(b) The PCR shall be transmitted on the forms attached to this permit. Official laboratory and calibration reports (or copies thereof) must be included within the PCR.

B. Periodic Compliance Report Requirements

The Permittee must submit a PCR report that includes the following:

a. Laboratory Sample Results

i. Each PCR shall contain the results of independent laboratory analyses of wastewater samples for the parameters listed in Section B, Table 2.

ii. Sampling and analyses must be conducted in accordance with the methodologies detailed in 40 CFR 136 and amendments thereto.

iii. Samples to be collected on more than one day per reporting must be collected on consecutive days typical of normal production.

iv. Copies of official laboratory reports, including chain of custody records, must be included within each PCR.

v. The contract laboratory must be certified by the New York State Department of Health (NYSDOH) for each parameter to be analyzed (refer to Table 2).

vi. For the purpose of this permit, Total Toxic Organics (TTOs) is defined as the sum of the detectable concentrations of parameters detected by USEPA Method 624 including xylenes.

vii. Each PCR must include a summary of sampling and analytical methodologies employed. Note that composite samples must be collected at a minimum rate of one sample aliquot every 30 minutes.

viii. The concentration of any parameter listed in Table 2 shall not exceed the effluent limitations detailed in Section B, Table 2 of this permit.

ix. The Manager must be notified in writing if any of the USEPA Priority Pollutants are to be discharged to the Harriman Sewage Treatment Plant. The Manager must be notified in order to evaluate the impact of any change in discharge pursuant to Section F of this permit.

x. Additional sampling and flow measurement may be performed by the permittee. Any data collected using certified methods must be submitted to this office with the required self monitoring data for the corresponding period to evaluate compliance with permit effluent

limitations and pretreatment standards. Additional data may be used for computations of the Industrial Wastewater Discharge Surcharge.

b. General Contact Information
c. Compliance Certification
   i. Each PCR requires a statement that compliance with all applicable effluent limitations has been maintained throughout the reporting period. If the permittee fails to maintain compliance the requirements listed in Section C - Reporting Requirements must be adhered to.
d. Parameters greater than pretreatment standards, if applicable.
e. Reasons for noncompliance, if applicable.
f. Steps taken to correct the cause of noncompliance, if applicable.
g. Any unusual operating conditions during the sampling period.
h. Description of method for determining flow.
i. Description of sampling methods used.
j. Waste Material Disposal, including:
   i. Screenings, sludges, solids, waste oils and other wastes generated as a result of the Permitte's pretreatment process must be reported to the Manager. Required information includes.
      1. Source of Material
      2. Approximate Volume
      3. Approximate Weight
      4. Name of Transporter
      5. Date of Removal from Facility
      6. Method of Removal
      7. Name and Address of Final Disposal Site

N. RECORD-KEEPING REQUIREMENTS

The Permittee shall maintain records of all information resulting from any monitoring activities for a minimum of three (3) years, whether or not such monitoring activities are required by the Orange County Department of Public Works. The period of retention shall be extended during the course of any unresolved litigation regarding the Industrial User. The records shall be made available for inspection and copying by the Orange County Department of Public Works. Records for all monitoring shall include:

(a) The date, exact place, method, and time of sampling and the names of the person or persons taking the samples.
(b) The dates and time analyses were performed.
(c) Who performed the analyses.
(d) The analytical methods used.
(e) The results of such analyses.

O. COMPUTATION AND PAYMENTS OF INDUSTRIAL WASTE SURCHARGE

The Permittee shall pay its proportionate share of the cost of operation and maintenance and local debt retirement of the treatment facility to which it discharges industrial wastewater.

As stated in Section 13.13 of the Local Sewer Use Law, the Industrial Wastewater Surcharge shall be accessed for industrial facilities that add a significant loading of conventional pollutants to the Harriman Sewerage Treatment Plant.

Payments shall be made to the Orange County Department of Public Works by the industrial users no less often than semi-annually. If there is a substantial change in the wastewater characteristics and flow rate introduced into the sewer system by an industrial user, such user's industrial surcharge shall be adjusted accordingly.

P. CIVIL AND CRIMINAL PENALTIES

Any person who violates any of the provisions of or who fails to perform any duty imposed by the Rules and Regulation or any order or determination of the Orange County Department of Public Works or the terms of any permit issued thereunder, shall be liable to Orange County for a civil penalty of at least five hundred dollars ($500) but not to exceed one thousand dollars ($1,000.00) per violation per day, to be assessed after a hearing held in conformance with the procedures set forth in Section 12.12 of the Local Sewer Use Law.

Each violation shall be a separate and distinct violation and in the case of a continuing violation, each day's continuance thereof shall be deemed a separate and distinct violation. Such penalty may be recovered in an action brought by the County's attorney in the name of Orange County in any court of competent jurisdiction. Such civil penalty may be released or compromised by the Orange County Department of Public Works before the matter has been referred to the County's attorney and where such matter has been referred to the County's attorney any such penalty may be released or compromised and any action commenced to recover the same may be settled and discontinued by the County's attorney only with the consent of Orange County. Any person who willfully violates any provision of the Local Sewer Use Law or any final determination or order of the Orange County Department of Public Works shall, in addition, be guilty of a misdemeanor and upon conviction thereof, shall be punished by imprisonment of not more than six months or by a fine of at least $1,000 per day. Each offense shall be a separate and distinct offense and in the case of a continuing offense, each day's continuance thereof shall be deemed a separate and distinct offense.

Q. OTHER REQUIREMENTS

SIGNATORY REQUIREMENTS

An authorized representative must sign all reports and correspondence submitted by the permittee in accordance with this permit. The authorized representative of the user shall be an individual who is:

(1) A principal executive officer of at least the level of Vice President;

(2) A general partner or proprietor if the Industrial user is a partnership or sole proprietorship.

(3) A duly authorized representative of the individual described in (1) or (2) of this section if such representative is responsible for the overall operation of the facility from which the indirect discharge originates.

CERTIFICATION STATEMENT REQUIREMENTS

All reports, including self monitoring reports, and correspondence submitted by the authorized representative of the permittee must include the following certification statement:

"I certify under penalty of law that this document and all attachments were prepared under my direction or supervision in accordance with a system designed to assure that qualified personnel properly gather and evaluate the information submitted. Based on my inquiry of the person or persons who manage the system, or those persons directly responsible for gathering the information, the information submitted, is to the best of my knowledge and belief, true, accurate, and complete. I am aware that there are significant penalties for submitting false information, including the possibility of fine and imprisonment for knowing violations."

TOTAL TOXIC ORGANIC MANAGEMENT PLAN REQUIREMENTS

Permittee's who utilize any toxic organic compounds at their facility must provide the Manager with a Toxic Organic Management Plan (TTO Plan) that specifies the following information:

(1) Any toxic organic compounds used at the facility;

(2) The method of disposal used instead of dumping such as reclamation, contract hauling, or incineration;

(3) Procedures for ensuring that toxic organics do not routinely spill or leak into the wastewater.

(4) Once the TTO Plan has been approved by the Manager, the permittee may sign and attach the following certification statement with their completed self monitoring reports, in lieu of monitoring for Total Toxic Organics (TTO).

> *"Based on my inquiry of the person or persons directly responsible for managing compliance with the pretreatment standard for total toxic organics (TTO), I certify that to the best of my knowledge and belief, no dumping of concentrated toxic organics into the wastewater has occurred since filing of the last Periodic Compliance Report. I further certify that this facility is implementing the Total Toxic Organic Management Plan submitted to the Orange County Department of Public Works."*

AUTHORIZATION AND AGREEMENT

This permit and the authorization to discharge industrial wastewater into the Harriman Sewage Treatment Plant shall be legally binding upon the Permittee. The Permittee shall not discharge after the date of expiration. In order to receive a new permit and continued authorization to discharge wastewater to the Harriman Sewage Treatment Plant beyond the date of expiration, the Permittee must submit an application for a new permit no earlier than 60 days and no later than 30 days prior to the expiration date of this permit. Also, all industrial waste surcharges owed to the Orange County Department of Public Works to date must be paid and any other information required by the County must be submitted.

DATE	SIGNATURE

By the authority of The Orange County Department of Public Works.

I hereby agree to comply with the terms, conditions and requirements of this permit.

SIGNATURE OF PERMITTEE OR AUTHORIZED REPRESENTATIVE	DATE
PRINTED NAME OF PERSON SIGNING	TITLE