2017 Model Year Engine Family

HHDXC1.87AEF

Table of Contents

Model Photos …… Page 1

OEM Key Components…….. Page 2-3

VIN Coding Structure…… Page 4

Crankcase Venting……. Page 5-6

Service Intervals…… Page 7-12

Test Data……..... Page 13-17

Emissions Label Location…….. Page 18

Engine Family HHDXC1.87AEF Photos

Photos will be available after 5/15/16 and will be sent to the EPA ASAP Afterwards

2017 MY Precision Cooled 49-State Touring OEM Key Components.

Vehicle Configuration	Fuel Tank Assembly	Fuel Tank Top Plate Gasket	Fuel Pump	Fuel Filter	Vapor Valve	Fuel Cap	Carbon Canister	Purge Port Solenoid	Throttle Body & Intake Manifold Assembly	Fuel Rail	Injectors	Sparkplugs	Sparkplug Cable rear LH	Sparkplug Cable rear RH	Sparkplug Cable front LH	Sparkplug Cable front RH	Ignition Coil
FLHTK DOM	61356-08	61402-08	62908-08	61011-04A	75069-08C	61274-92	N/A	N/A	27200016A	27400016	27400015	31600012	31600079	31600023	31600079	31600018	31600017
FLHTK SHRINE DOM	61356-08	61402-08	62908-08	61011-04A	75069-08C	61274-92	N/A	N/A	27200016A	27400016	27400015	31600012	31600079	31600023	31600079	31600018	31600017
FLHTKL DOM	61356-08	61402-08	62908-08	61011-04A	75069-08C	61274-92	N/A	N/A	27200016A	27400016	27400015	31600012	31600079	31600023	31600079	31600018	31600017
FLTRU DOM	61356-08	61402-08	62908-08	61011-04A	75069-08C	61274-92	N/A	N/A	27200016A	27400016	27400015	31600012	31600079	31600023	31600079	31600018	31600017
CVO: FLHTKSE DOM	61356-08	61402-08	62908-08	61011-04A	75069-08C	61274-92	N/A	N/A	27200016A	27400016	27400015	31600012	31600079	31600023	31600079	31600018	31600017
CVO: FLHXSE DOM	61000207	61402-08	62908-08	61011-04A	75076-08B	63136-10A 61100052	N/A	N/A	27200016A	27400016	27400015	31600012	31600079	31600023	31600079	31600018	31600017

Vehicle Configuration	Calibration Part #	Electronic Control Module	Crankcase Breather Assembly Front	Crankcase Breather Assembly Rear	Crank Position Sensor	Engine Temp Sensor	TMAP Sensor	Throttle Position Sensor	O2 Sensor front	O2 Sensor rear	Muffler left	Muffler right	Exhaust Header 3rd Volume	Air Cleaner Filter	Air Cleaner Backing Plate	Snorkel or Stacks	Knock Sensor
FLHTK DOM	41000481A	41000307	29400210	29400183	32700048	32700054	32700065	N/A	32700046	27809-10	64900235	64900236	65600176	29400212	29000120	29200098	69200840
FLHTK SHRINE DOM	41000481A	41000307	29400210	29400183	32700048	32700054	32700065	N/A	32700047	27809-11	64900235	64900236	65600176	29400212	29000120	29200098	69200840
FLHTKL DOM	41000481A	41000307	29400210	29400183	32700048	32700054	32700065	N/A	32700048	27809-12	64900235	64900236	65600176	29400212	29000120	29200098	69200840
FLTRU DOM	41000481A	41000307	29400210	29400183	32700048	32700054	32700065	N/A	32700049	27809-13	64900235	64900236	65600176	29400212	29000120	29200098	69200840
CVO: FLHTKSE DOM	41000485	41000307	29400210	29400183	32700048	32700054	32700065	N/A	32700046	27809-10	64900358	64900359	65600176	29400267	29000148	N/A	69200840
CVO: FLHXSE DOM	41000485	41000307	29400210	29400183	32700048	32700054	32700065	N/A	32700046	27809-10	64900500 64900494	64900501 64900495	65600176	29400267	29000148	N/A	69200840

2017 MY Precision Cooled Domestic Touring Optional Point of Sale Key Components

Vehicle Configuration	Camshaft front (Option E1 & G1)	Camshaft front (Options E2 & G2)	Camshaft front (Options E3 & G3)	Calibration Part # (Options B, C, D, & J) 1754cc displacement	Calibration Part # (Options B, C, D, E1, G1, & J) 1754cc displacement	Calibration Part # (Options B, C, D, E2, G2 & J) 1754cc displacement	Calibration Part # (Options B, C, D, E3, G3 & J) 1754cc to 1868cc displacement	Calibration Part # (Options B, C, D, J, & K) 1868cc displacement	Calibration Part # (Options B, C, D, E1, G1, J, & K) 1868cc displacement	Calibration Part # (Options B, C, D, E2, G2, J, & K) 1868cc displacement	Calibration Part # (Options B, C, D, E3, G4, J, & K) 1868cc to 1917cc displacement
FLHTK DOM	25400122	25400203	25400209	41000520	41000510	41000511	41000517	41000522	41000514	41000516	41000519
FLHTK SHRINE DOM	25400122	25400203	25400209	41000520	41000510	41000511	41000517	41000522	41000514	41000516	41000519
FLHTKL DOM	25400122	25400203	25400209	41000520	41000510	41000511	41000517	41000522	41000514	41000516	41000519
FLTRU DOM	25400122	25400203	25400209	41000520	41000510	41000511	41000517	41000522	41000514	41000516	41000519
CVO: FLHTKSE DOM	25400122	25400203	25400209	N/A	N/A	N/A	N/A	41000522	41000514	41000516	41000519
CVO: FLHXSE DOM	25400122	25400203	25400209	N/A	N/A	N/A	N/A	41000522	41000514	41000516	41000519

Vehicle Configuration	Air Cleaner Backing Plate (Option B1)	Air Cleaner Backing Plate (Option C1)	Air Cleaner Backing Plate (Options D1)	Snorkel or Stacks (Options D1)	Piston (Option G3)	Piston (Option G4)	Piston (Option K1)	Compliant Tuner (Option J1)	Air Cleaner Filter (Option B1)	Air Cleaner Filter (Option C1)	Air Cleaner Filter (Option D1)
FLHTK DOM	29000126 (#)	29000148 (#)	29000192 (#)	29000194 (#)	21900064	21900069	21900033	41000008C	29400247	29400293	29400273 (#)
FLHTK Shrine DOM	29000126 (#)	29000148 (#)	29000192 (#)	29000194 (#)	21900064	21900069	21900033	41000008C	29400247	29400293	29400273 (#)
FLHTKL DOM	29000126 (#)	29000148 (#)	29000192 (#)	29000194 (#)	21900064	21900069	21900033	41000008C	29400247	29400293	29400273 (#)
FLTRU DOM	29000126 (#)	29000148 (#)	29000192 (#)	29000194 (#)	21900064	21900069	21900033	41000008C	29400247	29400293	29400273 (#)
CVO: FLHTKSE DOM	29000126 (#)	29000148 (#)	29000192 (#)	29000194 (#)	N/A	21900069	21900033	41000008C	29400247	29400293	29400273 (#)
CVO: FLHXSE DOM	29000126 (#)	29000148 (#)	29000192 (#)	29000194 (#)	N/A	21900069	21900033	41000008C	29400247	29400293	29400273 (#)

(#) Denotes Cosmetic Variants Available

Vehicle Identification Number Description and Location

[redacted]

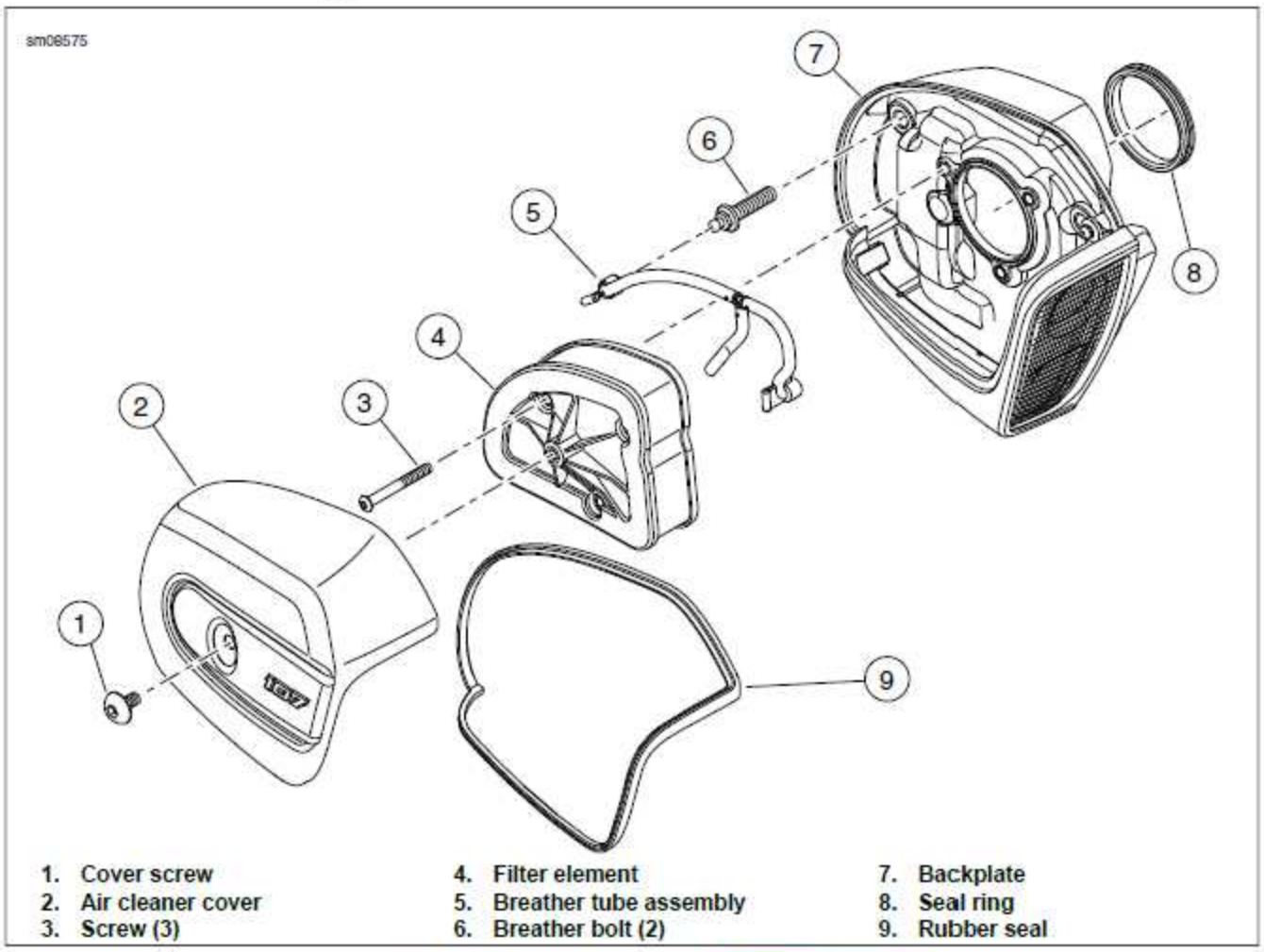

Figure 5-3. Air Cleaner Assembly hdgraphicU26096e

CRANKCASE VENTILATION hdtopic016155d

A breather assembly is mounted to each cylinder head to prevent a buildup of pressure caused by the downward force of the pistons. Burning crankcase vapor eliminates the pollutants normally discharged from the crankcase.

See Figure 4-6. As pistons push downward, displaced air in the crankcase is vented through the crankshaft roller bearing into the cam compartment. The air flows up the pushrod covers (1) into the rocker housing. The moving air absorbs a small amount of oil vapor as it travels through the engine.

The oil/air vapor passes through an opening in the breather assembly (3).

In the breather assembly, the flow of air passes downward through a labyrinth where most of the oil is separated from the air. It then moves upward through the breather element (4) where the remaining oil is removed. Two small holes in the bottom of the breather housing allow the separated oil to drain back into the crankcase.

Passing through the breather element, the vapor passes through the umbrella valve (2). Vapor passes down into the cylinder head passageway and through the breather bolt (5). It passes through a breather tube (6) into the air filter element where it combines with the intake air stream and is burned during normal combustion.

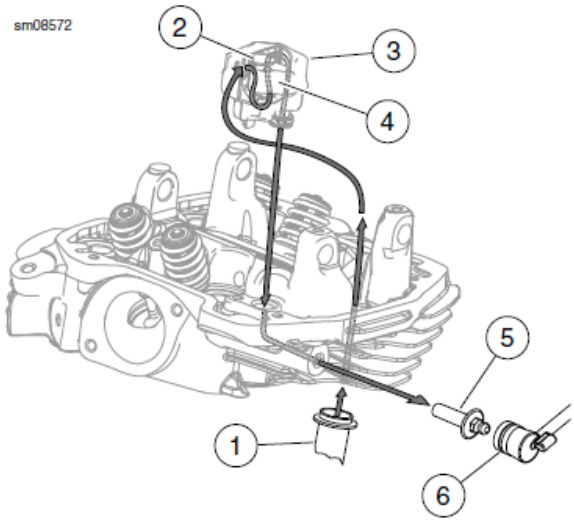

1. Pushrod cover
2. Umbrella valve
3. Breather assembly
4. Breather element
5. Breather bolt
6. Breather tube

Figure 4-6. Breather Air Flow hdgraphic026077b

TOURING MODELS

Table 29. Regular Service Intervals: 2017 Harley-Davidson Touring Models

ITEM SERVICED	1000 mi 1600 km	5000 mi 8000 km	10000 mi 16000 km	15000 mi 24000 km	20000 mi 32000 km	25000 mi 40000 km	30000 mi 48000 km	35000 mi 56000 km	40000 mi 64000 km	45000 mi 72000 km	50000 mi 80000 km	NOTES
Check operation of electrical equipment and switches	X	X	X	X	X	X	X	X	X	X	X	
Check front tire pressure, inspect tread	X	X	X	X	X	X	X	X	X	X	X	1
Check front wheel spoke tightness (if equipped)	X	X			X			X			X	2, 3, 4
Inspect front brake fluid at level at sight glass	X	X	X	X	X	X	X	X	X	X	X	5
Inspect clutch fluid system for leaks, contact or abrasion	X	X	X	X	X	X	X	X	X	X	X	6
Check front brake and hydraulic clutch reservoir cover screw torque	X		X		X		X		X		X	1, 2, 7
Check hand control fastener switch housing screw torque	X		X		X		X		X		X	1, 2, 7
Check clutch lever handlebar clamp screw torque	X		X		X		X		X		X	1, 2, 7
Check master cylinder handlebar clamp screw torque	X		X		X		X		X		X	1, 2, 7
Inspect, lubricate and adjust steering head bearings						X					X	2, 8
Inspect windshield bushings (if equipped)			X		X		X		X		X	2
Inspect air cleaner, service as required		X	X	X	X	X	X	X	X	X	X	4
Replace engine oil and filter	X	X	X	X	X	X	X	X	X	X	X	1, 4
Check engine coolant freeze point, inspect for leaks	X	X	X	X	X	X	X	X	X	X	X	
Coolant	Replace coolant every 30,000 mi (48,000 km)											2
Clean radiators or oil cooler	X	X	X	X	X	X	X	X	X	X	X	
Replace primary chaincase lubricant	X		X		X		X		X		X	4
Replace transmission lubricant	X				X				X			4
Inspect oil lines and brake system for leaks, contact or abrasion	X	X	X	X	X	X	X	X	X	X	X	1, 2
Inspect fuel lines and fittings for leaks, contact or abrasion	X	X	X	X	X	X	X	X	X	X	X	1, 2
Inspect rear brake fluid at level at sight glass	X	X	X	X	X	X	X	X	X	X	X	5
Check rear brake reservoir cover screw torque	X		X		X		X		X		X	1, 2, 7
Inspect brake pads and discs for wear	X	X	X	X	X	X	X	X	X	X	X	
Check front axle nut torque	X		X		X		X		X		X	1, 2, 7
Inspect and lubricate jiffy stand	X	X	X	X	X	X	X	X	X	X	X	2, 4
Check, adjust and lubricate (with HARLEY LUBE) brake and clutch controls	X	X	X	X	X	X	X	X	X	X	X	
Check tightness of rear wheel spokes (if equipped)	X	X			X			X			X	2, 3, 4
Check rear tire pressure, inspect tread	X	X	X	X	X	X	X	X	X	X	X	1
Inspect and adjust drive belt and sprockets	X	X	X	X	X	X	X	X	X	X	X	2
Check rear axle nut torque	X		X		X		X		X		X	1, 2, 7

Table 29. Regular Service Intervals: 2017 Harley-Davidson Touring Models

ITEM SERVICED	1000 mi 1600 km	5000 mi 8000 km	10000 mi 16000 km	15000 mi 24000 km	20000 mi 32000 km	25000 mi 40000 km	30000 mi 48000 km	35000 mi 56000 km	40000 mi 64000 km	45000 mi 72000 km	50000 mi 80000 km	NOTES
Inspect exhaust system for leaks, cracks and loose, or missing fasteners or exhaust shields	X	X	X	X	X	X	X	X	X	X	X	4
Battery	Check battery, terminal torque and clean connections annually. Lubricate terminals with ELECTRICAL CONTACT LUBRICANT.											1
Spark plugs	Replace spark plugs every two years or every 30,000 mi (48,000 km), whichever comes first.											
Lubricate fuel door hinge and latch with HARLEY LUBE	X	X	X	X	X	X	X	X	X	X	X	
Rebuild front forks											X	2, 9
Fuel filter	Replace fuel filter every 100,000 mi (160,000 km).											2, 4
Rear sprocket isolators	Inspect rear sprocket isolators for wear at each rear tire change.											
Brake and clutch systems	Flush brake and clutch systems and replace DOT 4 hydraulic brake and clutch fluids every two years											2
Road test to verify component and system functions	X	X	X	X	X	X	X	X	X	X	X	
NOTES:	1. Perform annually or at specified intervals, whichever comes first. 2. Should be performed by an authorized Harley-Davidson dealer, unless you have the proper tools, service data and are mechanically qualified. 3. Perform spoke tension check at 1000 mi (1600 km), 5000 mi (8000 km), 20,000 mi (32,000 km) services and every 15,000 mi (24,000 km) interval thereafter. Not all vehicles are equipped with spoke wheels. Consult appropriate topic in service manual. 4. Perform maintenance more frequently in severe riding conditions such as extreme temperatures, dusty environments, mountainous or rough roads, long storage conditions, short runs, heavy stop/go traffic or poor fuel quality. 5. Brake fluid level will drop as brake pads wear. 6. Clutch fluid level will rise as clutch wears. 7. For torque instructions, see Shop Practices in the service manual. 8. Disassemble, lubricate, inspect and adjust every 25,000 mi (40,000 km). 9. Disassemble, inspect, rebuild forks and replace fork oil every 50,000 mi (80,000 km).											

FLHXSE MODEL

Table 32. Regular Service Intervals: 2017 FLHXSE

ITEM SERVICED	1000 mi 1600 km	5000 mi 8000 km	10000 mi 16000 km	15000 mi 24000 km	20000 mi 32000 km	25000 mi 40000 km	30000 mi 48000 km	35000 mi 56000 km	40000 mi 64000 km	45000 mi 72000 km	50000 mi 80000 km	NOTES
Check operation of electrical equipment and switches	X	X	X	X	X	X	X	X	X	X	X	
Check front tire pressure, inspect tread	X	X	X	X	X	X	X	X	X	X	X	6
Inspect front brake fluid at sight glass	X	X	X	X	X	X	X	X	X	X	X	4
Inspect clutch fluid system for leaks, contact or abrasion	X	X	X	X	X	X	X	X	X	X	X	7
Check front brake and hydraulic clutch reservoir cover screw torque	X		X		X		X		X		X	1, 4, 6
Check hand control fastener switch housing screw torque	X		X		X		X		X		X	1, 4, 6
Check clutch lever bracket handlebar clamp screw torque	X		X		X		X		X		X	1, 4, 6
Check master cylinder handlebar clamp screw torque	X		X		X		X		X		X	1, 4, 6
Inspect, lubricate and adjust steering head bearings						X					X	1, 2
Inspect air cleaner, service as required		X	X	X	X	X	X	X	X	X	X	3
Replace engine oil and filter	X	X	X	X	X	X	X	X	X	X	X	3, 6
Check engine coolant freeze point, inspect for leaks	X	X	X	X	X	X	X	X	X	X	X	
Coolant	Replace coolant every 30,000 mi (48,000 km)											1
Clean radiators	X	X	X	X	X	X	X	X	X	X	X	
Replace primary chaincase lubricant	X		X		X		X		X		X	3
Replace transmission lubricant	X				X				X			3
Inspect oil lines and brake system for leaks, contact or abrasion	X	X	X	X	X	X	X	X	X	X	X	1, 6
Inspect fuel lines and fittings for leaks, contact or abrasion	X	X	X	X	X	X	X	X	X	X	X	1, 6
Inspect rear brake fluid at sight glass	X	X	X	X	X	X	X	X	X	X	X	
Check rear brake reservoir cover screw torque	X		X		X		X		X		X	1, 4, 6
Inspect brake pads and discs for wear	X	X	X	X	X	X	X	X	X	X	X	
Check front axle nut torque	X		X		X		X		X		X	1, 4, 6
Inspect and lubricate jiffy stand	X	X	X	X	X	X	X	X	X	X	X	1, 3
Check, adjust and lubricate (with HARLEY LUBE) brake and clutch controls	X	X	X	X	X	X	X	X	X	X	X	
Check rear tire pressure, inspect tread	X	X	X	X	X	X	X	X	X	X	X	6
Inspect and adjust drive belt and sprockets	X	X	X	X	X	X	X	X	X	X	X	1
Check rear axle nut torque	X		X		X		X		X		X	1, 4, 6
Inspect exhaust system for leaks, cracks and loose, or missing fasteners or exhaust shields	X	X	X	X	X	X	X	X	X	X	X	3
Battery	Check battery, terminal torque and clean connections annually. Lubricate terminals with ELECTRICAL CONTACT LUBRICANT											6
Spark plugs	Replace spark plugs every two years or every 30,000 mi (48,000 km), whichever comes first.											

Table 32. Regular Service Intervals: 2017 FLHXSE

ITEM SERVICED	1000 mi 1600 km	5000 mi 8000 km	10000 mi 16000 km	15000 mi 24000 km	20000 mi 32000 km	25000 mi 40000 km	30000 mi 48000 km	35000 mi 56000 km	40000 mi 64000 km	45000 mi 72000 km	50000 mi 80000 km	NOTES
Rebuild front forks											X	1, 5
Fuel Filter	Replace fuel filter every 100,000 mi (160,000 km).											1, 3
Rear sprocket isolators	Inspect rear sprocket isolators for wear at each rear tire change.											
Brake and clutch systems	Flush brake and clutch systems and replace DOT 4 hydraulic brake and clutch fluids every two years											1
Road test to verify component and system functions	X	X	X	X	X	X	X	X	X	X	X	
NOTES:	1. Should be performed by an authorized Harley-Davidson dealer, unless you have the proper tools, service data and are mechanically qualified. 2. Disassemble, lubricate and inspect every 25,000 mi (40,000 km). 3. Perform maintenance more frequently in severe riding conditions (such as extreme temperatures, dusty environments, mountainous or rough roads, long storage conditions, short runs, heavy stop/go traffic or poor fuel quality). 4. For torque instructions, see Shop Practices in the service manual. 5. Disassemble, inspect, rebuild forks and replace fork oil every 50,000 mi (80,000 km). 6. Perform annually or at specified intervals, whichever comes first. 7. Clutch fluid level will rise as clutch wears.											

FLHTKSE MODEL

Table 34. Regular Service Intervals: 2017 FLHTKSE

ITEM SERVICED	1000 MI 1600 KM	5000 MI 8000 KM	10000 MI 16000 KM	15000 MI 24000 KM	20000 MI 32000 KM	25000 MI 40000 KM	30000 MI 48000 KM	35000 MI 56000 KM	40000 MI 64000 KM	45000 MI 72000 KM	50000 MI 80000 KM	NOTES
Check operation of electrical equipment and switches	X	X	X	X	X	X	X	X	X	X	X	
Check front tire pressure, inspect tread	X	X	X	X	X	X	X	X	X	X	X	6
Inspect front brake fluid at sight glass	X	X	X	X	X	X	X	X	X	X	X	4
Inspect clutch fluid system for leaks, contact or abrasion	X	X	X	X	X	X	X	X	X	X	X	7
Check front brake and hydraulic clutch reservoir cover screw torque	X		X		X		X		X		X	1, 4, 6
Check hand control fastener switch housing screw torque	X		X		X		X		X		X	1, 4, 6
Check clutch lever bracket handlebar clamp screw torque	X		X		X		X		X		X	1, 4, 6
Check master cylinder handlebar clamp screw torque	X		X		X		X		X		X	1, 4, 6
Inspect, lubricate and adjust steering head bearings						X					X	1, 2
Inspect air cleaner, service as required		X	X	X	X	X	X	X	X	X	X	3
Replace engine oil and filter	X	X	X	X	X	X	X	X	X	X	X	3, 6
Check engine coolant freeze point, inspect for leaks	X	X	X	X	X	X	X	X	X	X	X	
Coolant	Replace coolant every 30,000 mi (48,000 km)											1
Clean radiators	X	X	X	X	X	X	X	X	X	X	X	
Replace primary chaincase lubricant	X		X		X		X		X		X	3
Replace transmission lubricant	X				X				X			3
Inspect oil lines and brake system for leaks, contact or abrasion	X	X	X	X	X	X	X	X	X	X	X	1, 6
Inspect fuel lines and fittings for leaks, contact or abrasion	X	X	X	X	X	X	X	X	X	X	X	1, 6
Inspect rear brake fluid at sight glass	X	X	X	X	X	X	X	X	X	X	X	
Check rear brake reservoir cover screw torque	X		X		X		X		X		X	1, 4, 6
Inspect brake pads and discs for wear	X	X	X	X	X	X	X	X	X	X	X	
Check front axle nut torque	X		X		X		X		X		X	1, 4, 6
Inspect and lubricate jiffy stand	X	X	X	X	X	X	X	X	X	X	X	1, 3
Check, adjust and lubricate (with HARLEY LUBE) brake and clutch controls	X	X	X	X	X	X	X	X	X	X	X	
Check rear tire pressure, inspect tread	X	X	X	X	X	X	X	X	X	X	X	6
Inspect and adjust drive belt and sprockets	X	X	X	X	X	X	X	X	X	X	X	1
Check rear axle nut torque	X		X		X		X		X		X	1, 4, 6
Inspect exhaust system for leaks, cracks and loose, or missing fasteners or exhaust shields	X	X	X	X	X	X	X	X	X	X	X	3
Battery	Check battery, terminal torque and clean connections annually. Lubricate terminals with ELECTRICAL CONTACT LUBRICANT.											6
Spark Plugs	Replace spark plugs every two years or every 30,000 mi (48,000 km), whichever comes first.											
Lubricate Fuel door hinge and latch with HARLEY LUBE	X	X	X	X	X	X	X	X	X	X	X	

Table 34. Regular Service Intervals: 2017 FLHTKSE

ITEM SERVICED	1000 MI 1600 KM	5000 MI 8000 KM	10000 MI 16000 KM	15000 MI 24000 KM	20000 MI 32000 KM	25000 MI 40000 KM	30000 MI 48000 KM	35000 MI 56000 KM	40000 MI 64000 KM	45000 MI 72000 KM	50000 MI 80000 KM	NOTES
Rebuild front forks											X	1, 5
Fuel filter	Replace fuel filter every 100,000 mi (160,000 km).											1, 3
Rear sprocket isolators	Inspect rear sprocket isolators for wear at each rear tire change.											
Brake and clutch systems	Flush brake and clutch systems and replace DOT 4 hydraulic brake and clutch fluids every two years											1
Road test to verify component and system functions	X	X	X	X	X	X	X	X	X	X	X	
NOTES:	1. Should be performed by an authorized Harley-Davidson dealer, unless you have the proper tools, service data and are mechanically qualified. 2. Disassemble, lubricate and inspect every 25,000 mi (40,000 km). 3. Perform maintenance more frequently in severe riding conditions (such as extreme temperatures, dusty environments, mountainous or rough roads, long storage conditions, short runs, heavy stop/go traffic or poor fuel quality). 4. For torque instructions, see Shop Practices in the service manual. 5. Disassemble, inspect, rebuild forks and replace fork oil every 50,000 mi (80,000 km). 6. Perform annually or at specified intervals, whichever comes first. 7. Clutch fluid level will rise as clutch wears.											

Contains Confidential Business Information

APG506018

[redacted]

Header

Requestor:	[redacted]	Test Cell:	[redacted]
Operator:		Vehicle Model:	
Driver:		Vehicle Destination:	
Odometer:		Vehicle Family:	
Test Date:		Engine Family:	
Fuel Type:		Recorder File:	
Back Plate:		Calibration File:	
Catalyst:		Strategy File:	
Muffler:		Shift Table:	
Hardware:		Canister Connected:	
Comments:			

Test Summary

	HC [gm/km]	CO [gm/km]	NOx [gm/km]	CO2 [gm/km]	HC + NOx [gm/km]	CH4 [gm/km]	N2O [gm/km]
Weighted Results	**0.1275**	**1.341**	**0.05729**	**148.7**	**0.1848**	**0.01256**	**0.004060**
Phase 1	0.2381	2.635	0.1352	147.4	0.3733	0.01981	0.004876
Phase 2	0.07158	0.8025	0.01996	158.3	0.09154	0.008183	0.003709
Phase 3	0.1495	1.378	0.06888	131.6	0.2183	0.01536	0.004105
Modal vs. Bag (%)	-9.334	-0.8787	-1.897	-0.9988			

Consumption Data

	Units	Test (excl. Hwy.)	Phase 1	Phase 2	Phase 3	Hwy	Combined
Fuel Economy	l/100km	6.457	6.506	6.838	5.745		
Fuel Economy	km/l	15.49	15.37	14.62	17.41		
Fuel Economy	mpg	36.43	36.16	34.40	40.94		
CO2	g/km	148.7	147.4	158.3	131.6		

Environmental Data

Relative Humidity	%	39.97	39.87	40.34	39.70
Ambient Temp	°C	22.5	22.4	22.4	22.6
Barometer	kPa	95.27	95.25	95.26	95.29

CVS Data

NOx Correction Factor	-	0.8951	0.8941	0.8964	0.8949

Dyno Data

Test Distance	km	17.76	5.771	6.205	5.781
Inertia	kg	640			
Road Load A	N	47.14			
Road Load B	N/(km/hr)	0			
Road Load C	N/((km/hr)^2)	0.033			
Coast Down Time	sec	9.52			

Goals

[redacted]

Post Test Comments

[redacted]

Other Comments

Contains Confidential Business Information

APG506082

[redacted]

Header

Requestor:	[redacted]	Test Cell:	[redacted]
Operator:		Vehicle Model:	
Driver:		Vehicle Destination:	
Odometer:		Vehicle Family:	
Test Date:		Engine Family:	
Fuel Type:		Recorder File:	
Back Plate:		Calibration File:	
Catalyst:		Strategy File:	
Muffler:		Shift Table:	
Hardware:		Canister Connected:	
Comments:			

Test Summary

	HC [gm/km]	CO [gm/km]	NOx [gm/km]	CO2 [gm/km]	HC + NOx [gm/km]	CH4 [gm/km]	N2O [gm/km]
Weighted Results	**0.1412**	**1.277**	**0.06532**	**150.4**	**0.2066**		
Phase 1	0.2362	2.683	0.1405	149.1	0.3767		
Phase 2	0.08594	0.6870	0.02023	160.1	0.1062		
Phase 3	0.1742	1.332	0.09388	132.9	0.2681		
Modal vs. Bag (%)	-7.355	0.5087	0.03325	-0.8671			

Consumption Data

	Units	Test (excl. Hwy.)	Phase 1	Phase 2	Phase 3	Hwy	Combined
Fuel Economy	l/100km	6.534	6.588	6.912	5.798		
Fuel Economy	km/l	15.30	15.18	14.47	17.25		
Fuel Economy	mpg	36.00	35.70	34.03	40.57		
CO2	g/km	150.4	149.1	160.1	132.9		

Environmental Data

Relative Humidity	%	39.66	39.75	39.75	39.48
Ambient Temp	°C	22.4	22.5	22.2	22.6
Barometer	kPa	95.71	95.69	95.70	95.74

CVS Data

NOx Correction Factor	-	0.8924	0.8938	0.8906	0.8929

Dyno Data

Test Distance	km	17.80	5.780	6.235	5.788
Inertia	kg	640			
Road Load A	N	47.14			
Road Load B	N/(km/hr)	0			
Road Load C	N/((km/hr)^2)	0.033			
Coast Down Time	sec	9.52			

Goals

[redacted]

Post Test Comments

[redacted]

Other Comments

Contains Confidential Business Information

APG506091

[redacted]

Header

Requestor:	[redacted]	Test Cell:	[redacted]
Operator:		Vehicle Model:	
Driver:		Vehicle Destination:	
Odometer:		Vehicle Family:	
Test Date:		Engine Family:	
Fuel Type:		Recorder File:	
Back Plate:		Calibration File:	
Catalyst:		Strategy File:	
Muffler:		Shift Table:	
Hardware:		Canister Connected:	
Comments:			

Test Summary

	HC [gm/km]	CO [gm/km]	NOx [gm/km]	CO2 [gm/km]	HC + NOx [gm/km]	CH4 [gm/km]	N2O [gm/km]
Weighted Results	**0.1588**	**1.380**	**0.07215**	**150.4**	**0.2309**		
Phase 1	0.2728	2.787	0.1405	149.6	0.4133		
Phase 2	0.09308	0.7373	0.02627	160.2	0.1194		
Phase 3	0.1969	1.535	0.1073	132.7	0.3043		
Modal vs. Bag (%)	-8.878	-0.6062	6.692	-1.161			

Consumption Data

	Units	Test (excl. Hwy.)	Phase 1	Phase 2	Phase 3	Hwy	Combined
Fuel Economy	l/100km	6.543	6.627	6.916	5.788		
Fuel Economy	km/l	15.28	15.09	14.46	17.28		
Fuel Economy	mpg	35.95	35.49	34.01	40.64		
CO2	g/km	150.4	149.6	160.2	132.7		

Environmental Data

Relative Humidity	%	39.36	39.43	39.62	39.03
Ambient Temp	°C	22.4	22.3	22.4	22.4
Barometer	kPa	95.89	95.91	95.89	95.88

CVS Data

NOx Correction Factor	-	0.8899	0.8897	0.8909	0.8892

Dyno Data

Test Distance	km	17.79	5.783	6.232	5.780
Inertia	kg	640			
Road Load A	N	47.14			
Road Load B	N/(km/hr)	0			
Road Load C	N/((km/hr)^2)	0.033			
Coast Down Time	sec	9.52			

Goals

[redacted]

Post Test Comments

[redacted]

Other Comments

Contains Confidential Business Information

APG506200

[redacted]

Header

Requestor:	[redacted]	Test Cell:	[redacted]
Operator:		Vehicle Model:	
Driver:		Vehicle Destination:	
Odometer:		Vehicle Family:	
Test Date:		Engine Family:	
Fuel Type:		Recorder File:	
Back Plate:		Calibration File:	
Catalyst:		Strategy File:	
Muffler:		Shift Table:	
Hardware:		Canister Connected:	
Comments:			

Test Summary

	HC [gm/km]	CO [gm/km]	NOx [gm/km]	CO2 [gm/km]	HC + NOx [gm/km]	CH4 [gm/km]	N2O [gm/km]
Weighted Results	**0.1905**	**1.748**	**0.1014**	**147.7**	**0.2919**		
Phase 1	0.3053	3.384	0.2108	147.3	0.5161		
Phase 2	0.1324	1.088	0.04176	157.3	0.1742		
Phase 3	0.2131	1.757	0.1313	130.0	0.3444		
Modal vs. Bag (%)	-6.542	1.629	1.244	-0.9889			

Consumption Data

	Units	Test (excl. Hwy.)	Phase 1	Phase 2	Phase 3	Hwy	Combined
Fuel Economy	l/100km	6.451	6.559	6.808	5.697	4.581	5.450
Fuel Economy	km/l	15.50	15.25	14.69	17.55	21.83	17.83
Fuel Economy	mpg	36.46	35.86	34.55	41.29	51.35	41.93
CO2	g/km	147.7	147.3	157.3	130.0	104.9	124.8

Environmental Data

Relative Humidity	%	35.70	37.38	37.57	36.02
Ambient Temp	°C	23.1	22.4	22.6	23.1
Barometer	kPa	95.29	95.32	95.31	95.26

CVS Data

NOx Correction Factor	-	0.8814	0.8824	0.8847	0.8826

Dyno Data

Test Distance	km	34.23	5.773	6.192	5.763
Inertia	kg	640			
Road Load A	N	47.14			
Road Load B	N/(km/hr)	0			
Road Load C	N/((km/hr)^2)	0.033			
Coast Down Time	sec	9.54			

Goals

[redacted]

Post Test Comments

[redacted]

Other Comments

Contains Confidential Business Information

[redacted]

TEST Distance (km)	TEST NUMBER	TEST Date	EVAPORATIVE HC EMISSION (g/test) Diurnal	Hot Soak	Combined	TEST DATA EXHAUST EMISSIONS (g/km) HC	CO	Nox	HC+Nox	CO2	CH4	N2O
3535	[redacted]					0.127	1.341	0.057	0.185	149	0.013	0.004
8081						0.141	1.277	0.065	0.207	150		
8112						0.159	1.380	0.072	0.231	150		
15053						0.190	1.748	0.101	0.292	148		

1. Enter data in blue fields only
2. Regress data

REGRESSED VALUES

Distance (km)	EVAPORATIVE EMISSION HC (g/test)	EXHAUST EMISSIONS (g/km) HC	CO	NOx	HC+Nox	CO2	CH4	N2O
30,000	0.0000	0.2720	2.2560	0.1032	0.3752	149	0.013	0.004
15,000	0.0000	0.1893	1.6790	0.1012	0.2905	149	0.013	0.004
EVAP Veh. D.F. =	**0.0000**							
EVAP Assigned Bench D.F. =	**0.5000**							

EVAP D.F. = Avg. of Veh. D.F, and Bench D.F.

DETERIORATION FACTORS

EVAPORATIVE EMISSIONS (Additive DF) HC (g/test)	EXHAUST EMISSIONS (Multiplicative DF) HC	CO	NOx	HC+NOx
0.250	1.437	1.344	1.020	1.292

Note: Emisssion values < 0.1 were adjusted to 0.1 per CFR-40, § 86.432-78 (b) for DF calculation purposes only.

CERTIFICATION LEVELS

EVAPORATIVE EMISSION HC (g/test)	EXHAUST EMISSIONS (g/km) HC	CO	NOx	HC+Nox
0.250	0.274	2.349	0.103	0.377

Engine Family HHDXC1.75AED, (2-Wheeled Vehicles Only)

Engine Family HHDXC1.87AEF

Emissions Label Location

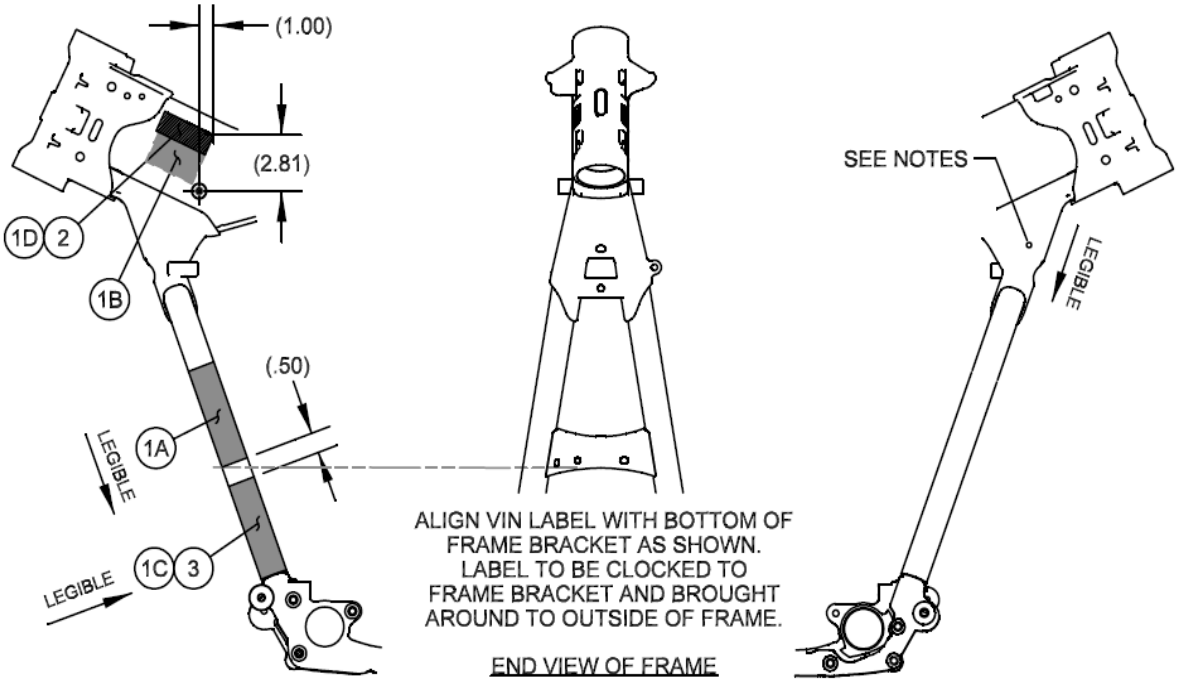

LEFT VIEW OF FRAME DOWN TUBE

LABEL SET:

1A - VIN LABEL
1B - FRENCH EMISSIONS LABEL
1C - EMISSIONS LABEL
1D - NOISE LABEL

RIGHT VIEW OF FRAME DOWN TUBE