AGUA CALIENTE BAND OF CAHUILLA INDIANS

TRIBAL PLANNING & DEVELOPMENT

May 27, 2009

Eugene Bromley, Storm Water Coordinator
EPA Region 9 (WTR-7)
75 Hawthorne Street
San Francisco, CA 94105

RE: National Pollution Discharge Elimination System (NPDES) Permit No. CAS04000I Annual Report and Permit Reapplication

Dear Mr. Bromley:

In accordance with U.S. Environmental Protection Agency (EPA) Office of Water Interpretative Policy Memorandum (May 17, 1996) on Reapplication Requirements for Municipal Separate Storm Sewer Systems (MS4) and the requirements of 40 CFR 122.21(f), this letter and the enclosed Annual Report represent the permit reapplication package for NPDES Permit No. CAS04000I to discharge storm water runoff from the Agua Caliente Band of Cahuilla Indians (Tribe) MS4.

Information required by 40 CFR 122.21(f):

(1) Name and mailing address of the permittee that operate the MS4:

Agua Caliente Band of Cahuilla Indians
Attn: Tribal Planning & Development
5401 Dinah Shore Drive
Palm Springs, CA 92264

(2) Name and titles of the primary administrative and technical contacts for the permittee:

Administrative Contact
Margaret Park, Director of Planning and Natural Resources
Agua Caliente Band of Cahuilla Indians
Tel: 760-883-1326, Fax: 760-325-6952
mpark@aguacaliente-nsn.gov

Technical Contact
Dan Malcolm, Senior Planner
Agua Caliente Band of Cahuilla Indians
Tel: 760-883-1945, Fax: 760-325-6952
dmalcolm@aguacaliente-nsn.gov

777 EAST TAHQUITZ CANYON WAY, SUITE 301, PALM SPRINGS, CA 92262
T 760/699/6800 F 760/325/6952 WWW.AGUACALIENTE-NSN.GOV

(3) Proposed changes or improvements to the Tribe's Storm Water Management Program for the next five-year term of Permit No. CAS04000I:

Please see the enclosed Annual Report for proposed modifications to the Tribe's Storm Water Management Program

If you have any questions or need additional information I can be reached at 760-883-1945.

Very truly yours,

Dan Malcolm, AICP
Senior Planner
AGUA CALIENTE BAND OF CAHUILLA INDIANS

Enclosure

C: Margaret Park, Director of Planning & Natural Resources

ANNUAL REPORT

General Permit for the Discharger of Storm Water from Small Municipal Separate Storm Sewer Systems (General Permit)

(See Small MS4 Annual Report Guidance for additional guidance on completing this Annual Report Form)

Check box if this is a new name, address, etc.

A. Permittee Information

1. Permittee (Agency Name): Agua Caliente Band of Cahuilla Indians ☒
2. Contact Person: Dan Malcolm, Senior Planner ☒
3. Mailing Address: 5401 Dinah Shore Drive ☒
4. City, State and Zip Code: Palm Springs, CA 92264 ☒
5. Contact Phone Number: (760) 883-1945 ☒
6. Have any areas been added to the MS4 due to annexation or other legal means? ☐ YES ☒ NO

B. Reporting Period: Coverage Commencement (September 1, 2004) to August 31, 2009

C. Executive Summary

To ensure uniform and unified land planning and land use administration for all allotted trust and fee lands of the Agua Caliente Indian Reservation within the corporate boundaries of the cities of Palm Springs, Cathedral City, and Rancho Mirage, and certain portions of unincorporated Riverside County, the Tribe adopted the land use controls of these jurisdictions and designated these agencies as the Tribe's agent ("Agent Agencies") in their enforcement and administration. Therefore, almost all of the development taking place on the Reservation is covered under these land use agreements with the Agent Agencies, and the MS4 systems that support this development are owned and maintained by these jurisdictions. Tribal Trust land, however, is excluded from these agreements and the focus of this multi-year annual report is on storm water management on Tribal Trust land.

?

MS4 owned by R. County?

D. Minimum Control Measures

1. Public Education and Outreach

BMP	Description	Status					
		Implemented	Not Applicable	Modified	Effective	Unknown	Not Effective
Form Partnerships	The Tribal Program will incorporate appropriate elements of neighboring MS4 management plans into the Tribal SWMP. Tribal information will be made available to adjacent MS4 programs.	X					
Educational Materials and Strategies	Informational materials describing potential impacts from storm water discharge to local water bodies and preventive measures that may be utilized to reduce such impact will be made available at Tribal Administration and Tribal Enterprise locations. Reservation specific brochures will be developed for distribution along with existing EPA Region 9 and County of Riverside publications. A link to SWMP educational information will be added to the Tribal web site.			X			
Diverse Audiences	Educational material will be provided for businesses such as auto shops, restaurants, car wash, etc. on the effects of dumping grease, used oil, and detergents into the storm drain system.				X		

a. BMPs

i. General summary

The Public Education and Outreach component of the Tribe's SWMP is intended to complement the public education and outreach efforts of the Riverside County Storm Drain Pollution Prevention Program. Since almost all of the development taking place on the Reservation is regulated by the Agent Agencies, and serviced by MS4s they maintain and operate, the goal of the Public Education and Outreach element is to generate improved awareness among Tribal Members and employees on storm water pollution prevention.

ii. Status of Measurable Goals

Pollution prevention brochures are available at Tribal Administration and Enterprise locations. A link to the Riverside County Storm Drain Pollution Prevention Program website has been added to the Tribal Members website providing them access to valuable pollution prevention information relevant to the communities in which a majority of them live. Inlet structures on the Reservation have been marked with "Only Rain Down the Storm Drain" logos by the Agent Agencies.

iii. Appropriateness

Because nearly the entire developed portion of the Reservation is serviced by MS4s maintained and operated by the Agent Agencies, incorporating pollution prevention information from these responsible agencies is appropriate.

iv. Effectiveness

The Public Outreach and Education component of the Tribe's SWMP is almost completely reliant on the education and outreach efforts of the Agent Agencies; therefore, the effectiveness of the above BMPs is directly tied to their efforts.

v. Proposed Modifications

For the next five-year SWMP, the requirement to prepare Reservation specific pollution prevention brochures should be removed. The current pollution and prevention brochures prepared by the Agent Agencies are adequate and effective; preparing Reservation specific brochures would be redundant.

b. Briefly summarize the storm water activities you plan to undertake during the next reporting cycle (including an implementation schedule). If you propose activities that differ from those originally proposed in the approved SWMP, provide justification.

The Tribe intends to continue its current efforts towards Tribal Member and employee outreach and education during the next reporting cycle.

BMP	Proposed Measurable Goal	Modified?		Schedule	
		YES	NO	Complete this year	Ongoing Implementation
Educational Materials and Strategies	Informational brochures and distribution		X		X
Educational Materials and Strategies	Stencil "Storm Water Only" on Reservation Inlet Structures		X		X

2. Public Involvement and Participation

BMP	Description	Status					
		Implemented	Not Applicable	Modified	Effective	Unknown	Not Effective
Advisory Panel	Storm water management policies will be incorporated into existing Tribal planning and engineering forums.	X					
Presentation	Reservation specific storm water management information will be available at Tribal Administration and at Tribal Enterprise operations.	X					
Citizen Input	Citizen input will be incorporated into existing Tribal planning and engineering forums.			X			
Community Clean-Ups	Volunteer contribution will be incorporated into existing Tribal enterprise volunteer park programs.			X			

a. BMPs

i. General summary

The Public Involvement and Participation component of the SWMP focuses on incorporating storm water management policies in the Standard Operating Procedures (SOPs) of Tribal facilities, and in the Tribal Planning and Development project review process.

ii. Status of Measurable Goals

Pollution prevention brochures are available at Tribal Administration and Enterprise locations. A link to the Riverside County Storm Drain Pollution Prevention Program website has been added to the Tribal Members website.

iii. Appropriateness

Because nearly the entire developed portion of the Reservation is serviced by MS4s maintained and operated by the Agent Agencies, incorporating pollution prevention information from these responsible agencies is appropriate. Further, providing this information in Tribal Administration and Enterprises SOPs and on the Tribal Members website are appropriate mediums to encourage public involvement and participation.

iv. Effectiveness

The BMPs implemented as part of the Public Involvement and Participation component of the Tribe's SWMP are effective in generating storm water pollution prevention awareness among Tribal Members and employees.

v. Proposed Modifications

For the next five-year SWMP, the requirement to prepare Reservation specific pollution prevention brochures should be removed. The current pollution and prevention brochures prepared by the Agent Agencies are adequate and effective; preparing Reservation specific brochures would be redundant. The Citizen Input BMP should be modified to read "Tribal Member and Employee Input," which is currently being done at Tribal planning and engineering forums.

b. Briefly summarize the storm water activities you plan to undertake during the next reporting cycle (including an implementation schedule). If you propose activities that differ from those originally proposed in the approved SWMP, provide justification.

The Tribe intends to continue it current efforts towards seeking Tribal Member and employee outreach and education during the next reporting cycle.

BMP	Proposed Measurable Goal	Modified?		Schedule	
		YES	NO	Complete this year	Ongoing Implementation
Presentation	Informational brochures and distribution		X		X
Tribal Member and Employee Input	Tribal SWMP and BMP Workshop	X			X

3. Illicit Discharge Detection and Elimination

BMP	Description	Status					
		Implemented	Not Applicable	Modified	Effective	Unknown	Not Effective
Outreach	Educational materials will be utilized to increase public awareness of the detrimental effects that illegal discharges have on water quality. A protocol for reporting suspected incidents of illicit discharges or illegal connections will be included in the educational material.	X					
Reporting	A standard form will be created to document observations of illegal discharges, spills, and dumping. A corresponding procedure will be developed to document corrective actions and incident close-out summarization. Public reporting procedures will be developed for direct telephone reporting and the reporting telephone extension number will be included on Tribal informational material.	X					
Prioritization	1. Storm Sewer System Map: a storm water system map, showing the location of the intakes and outfalls, will be prepared compiling exiting information from adjacent MS4 Agencies (Palm Springs, Cathedral City, Rancho Mirage, and Riverside County Flood Control and Water Conservation District). 2. Regulatory Mechanisms. Violations shall be subject to Tribal Ordinance, when in place. 3. Detection Plan. A Plan will be developed to detect, document and address illicit discharges.			X			

a. BMPs

i. General summary

The Illicit Discharge Detection and Elimination component of the SWMP focuses on increasing Tribal Member and employee awareness of the detrimental effects that illegal discharges have on water quality through the use of educational outreach materials provided by the Agent Agencies. As part of this outreach, standard reporting procedures have also been developed at Tribal Administration and Enterprise facilities.

ii. Status of Measurable Goals

Tribal Ordinance No. 24 prohibits the discharging of any pollutant into the waters of the Agua Caliente Indian Reservation. The Ordinance also includes civil penalty and clean-up and abatement provision. All off-site storm sewer systems located on the Reservation are owned and operated by the Agent Agencies, and are covered under the Whitewater Watershed NPDES Municipal Stormwater permit. Detection plans are in place at Tribal facilities and there are currently no problem drainage areas subject to Tribal control. All non-Tribal areas are covered under the detection plans of the Agent Agencies, which would have the responsibility to identify problem drainage areas and develop a prioritization remediation list.

iii. Appropriateness

Because nearly the entire developed portion of the Reservation is serviced by MS4s maintained and operated by the Agent Agencies, incorporating pollution prevention information from these responsible agencies is appropriate. Further, almost all incidents of illegal discharges, spills, and dumping are reported to the Agent Agencies, which have public reporting procedures and regulatory mechanisms in place. In such cases where these incidents occur on Trust lands under Tribal control, Ordinance No. 24 and Tribal Administration and Enterprise SOPs set forth reporting procedures.

iv. Effectiveness

The BMPs implemented as part of the Illicit Discharge Detection and Elimination component of the Tribe's SWMP are effective means of storm water pollution prevention outreach to Tribal Members and employees. There have been no reports or know incidents of illegal discharges, spills, or dumping at Tribal facilities during the Reporting Period.

v. Proposed Modifications

All off-site storm sewer systems located on the Reservation are owned and operated by the Agent Agencies, Those facilities are covered under the Whitewater Watershed NPDES Municipal Stormwater; therefore, compiling a separate storm sewer map just for the Reservation would be redundant since that information already exists for the greater watershed.

b. Briefly summarize the storm water activities you plan to undertake during the next reporting cycle (including an implementation schedule). If you propose activities that differ from those originally proposed in the approved SWMP, provide justification.

The Tribe intends to continue it current efforts towards Tribal Member and employee outreach to prevent illicit discharges, spills, or dumping.

BMP	Proposed Measurable Goal	Modified?		Schedule	
		YES	NO	Complete this year	Ongoing Implementation
Reporting	Systematic compliance for BMP program		X		X
Prioritization	Identify problem drainage areas and develop a prioritized remediation		X		X

4. Construction Site Storm Water Control

BMP	Description	Status					
		Implemented	Not Applicable	Modified	Effective	Unknown	Not Effective
Regulatory Mechanisms	Storm water runoff management provisions will be included in the existing development review and project conditioning apparatus, and tied to the issuance of grading and building permits and certificates of occupancy.	X					
Site Plan Review	All construction projects are subject to planning and engineering review in accordance with Tribal ordinances. Public input is incorporated into permitting approvals as an integral element of Tribal planning and environmental review.				X		
Inspection & Enforcement	All BMPs proposed by the approved SWPPP shall be implemented prior to the start of any construction activity. Violations shall be subject to Tribal Ordinance, when in place.	X					

a. BMPs

i. General summary

The Construction Site Storm Water Control component of the SWMP focuses on ensuring that adequate storm water management provisions are included in the development review and approval processes, including construction site inspection requirements and enforcement.

ii. Status of Measurable Goals

The Tribe has developed standard conditions of approval for the planning and development review process that include storm water control provisions. Storm Water Pollution Prevention Plans (SWPPP), based on the California Stormwater Quality Association SWPPP template, are required and implemented on all Tribal construction projects. Inspection and enforcement of the storm water control provisions ensure maximum compliance with Tribal Ordinances related to storm water management.

iii. Appropriateness

The management provisions contained in the construction site storm water runoff control BMPs are appropriate tools in the Tribal planning and development review process.

iv. Effectiveness

The storm water provisions in the Tribe's standard conditions of approval and the requirement that a SWPPP be implemented on all construction projects are effective construction site storm water runoff control measures.

v. Proposed Modifications

None.

b. Briefly summarize the storm water activities you plan to undertake during the next reporting cycle (including an implementation schedule). If you propose activities that differ from those originally proposed in the approved SWMP, provide justification.

The Tribe intends to continue it current efforts towards controlling construction site storm water on projects under Tribal control.

BMP	Proposed Measurable Goal	Modified?		Schedule	
		YES	NO	Complete this year	Ongoing Implementation
Regulatory Mechanism	Ordinance or other regulatory mechanism in place		X		X
Inspection and Enforcement	Procedures for site inspections implemented		X		X
Inspection and Enforcement	Maximum compliance with ordinance		X		X

5. Post-Construction Storm Water Management

If your community is subject to Attachment 4 (Supplemental Provisions) of the General Permit, note your compliance with and progress implementing the Design Standards in this section, if applicable.

BMP	Description	Status					
		Implemented	Not Applicable	Modified[1]	Effective	Unknown	Not Effective
Development Planning Process	Storm water runoff management provisions will be coordinated with existing tribal development review and project conditioning protocol. Structural provisions will be tied to the issuance of grading and building permits, and certificates of occupancy. Non structural provisions will be coordinated with the existing Tribal Habitat Conservation Plan and zoning guidelines. Provisions will be made for long-term maintenance of BMPs.	X					
Structural BMPs	Storm water runoff provisions are included in existing Tribal Planning and Engineering review procedures.				X		

a. BMPs

i. General summary

The Post-Construction Storm Water Management component of the SWMP focuses on ensuring that adequate long-term storm water management provisions are included in the Tribal Planning and Engineering review procedures.

ii. Status of Measurable Goals

The Tribe has developed standard conditions of approval for the planning and development review process that include storm water control provisions prior to the issuance of grading permits. The Land Use Ordinance for the Reservation links land use planning with habitat conservation and incorporates storm water management provisions in the development review process.

iii. Appropriateness

The management provisions contained in the Tribe's standard conditions of approval and Land Use Ordinance are appropriate for the long-term maintenance of post-construction storm water management.

iv. Effectiveness

Since all development under Tribal control is subject to the Tribe's standard conditions of approval and Land Use Ordinance, the storm water management provisions contained in these documents are effective in the long-term maintenance of BMPs.

v. Proposed Modifications

None.

b. Briefly summarize the storm water activities you plan to undertake during the next reporting cycle (including an implementation schedule). If you propose activities that differ from those originally proposed in the approved SWMP, provide justification.

The Tribe intends to continue it current post-construction storm water management efforts on projects and areas under Tribal control.

BMP	Proposed Measurable Goal	Modified?		Schedule	
		YES	NO	Complete this year	Ongoing Implementation
Development and Planning Process	Ordinance or other regulatory mechanism in place		X		X
Structural BMPs	Compliance with Tribal Land Use Ordinance development standards	X			X

6. Pollution Prevention and Good Housekeeping for Municipal Operations

BMP	Description	Status					
		Implemented	Not Applicable	Modified	Effective	Unknown	Not Effective
Employee Training Program	The existing educational programs conducted by the County of Riverside Department of Environmental Health, for the disposal of household hazardous waste (HHW), antifreeze, batteries, oil, and latex paint (ABOP) will be continued to be utilized to train personnel in the proper handling of these materials.				X		
Recycling Program	Existing recycling programs already implemented by the County of Riverside for the disposal of HHW and ABOP products are currently utilized by Tribal Operations				X		

a. BMPs

i. General summary

The Pollution Prevention and Good Housekeeping for Municipal Operations component of the SWMP relies on the existing educational efforts and recycling programs of the Agent Agencies.

ii. Status of Measurable Goals

Employees at Tribal facilities receive regular training on pollution prevention and good housekeeping. Recycling programs have been implemented at Tribal Administration and Enterprise locations.

iii. Appropriateness

Since the Reservation is serviced by waste service providers under the direction of the Agent Agencies, relying on their educational and recycling programs at Tribal facilities is appropriate.

iv. Effectiveness

Providing additional recyclable containers, both in quantity and type, throughout Tribal facilities has proven to be effective in increasing the Tribe's recycling efforts.

v. Proposed Modifications

None.

c. Briefly summarize the storm water activities you plan to undertake during the next reporting cycle (including an implementation schedule). If you propose activities that differ from those originally proposed in the approved SWMP, provide justification.

The Tribe intends to continue to rely on the existing educational efforts and recycling programs of the Agent Agencies.

BMP	Proposed Measurable Goal	Modified?		Schedule	
		YES	NO	Complete this year	Ongoing Implementation
Employee Training Program	Training		X		X
Recycling Program	Recycling		X		

E. Certification

"I certify under penalty of law that this document and all attachments were prepared under my direction or supervision in accordance with a system designed to assure that qualified personnel properly gather and evaluate the information submitted. Based on my inquiry of the person or persons who manage the system, or those persons directly responsible for gathering the information, the information submitted is, to the best of my knowledge and belief, true, accurate, and complete. I am aware that there are significant penalties for submitting false information, including the possibility of fine and imprisonment for knowing violations."

	5/27/09
Signature of Permittee (legally responsible person)	Date Signed
Dan Malcolm	Senior Planner
Name (printed)	Title

California Regional Water Quality Control Board
Santa Ana Region

Linda S. Adams
Secretary for Environmental Protection

3737 Main Street, Suite 500, Riverside, California 92501-3348
Phone (951) 782-4130 • FAX (951) 781-6288
www.waterboards.ca.gov/santaana

Arnold Schwarzenegger
Governor

October 28, 2010

CERTIFIED MAIL
RETURN RECEIPT REQUESTED

Thomas J. Wood
City Manager
City of Anaheim
200 South Anaheim Boulevard
Anaheim, CA 92805

NOTICE OF VIOLATION OF THE AREAWIDE URBAN STORM WATER RUNOFF PERMIT FOR ORANGE COUNTY AND THE INCORPORATED CITIES, REGIONAL BOARD ORDER NO. R8-2002-0010, NPDES PERMIT NO. CAS618030 AND RESULTS OF THE CITY OF ANAHEIM STORM WATER PROGRAM AUDIT – NEW DEVELOPMENT ELEMENT

Dear Mr. Wood:

On August 25, 26, and 31, 2010 and September 1 and 13, 2010, Regional Board staff met with staff of the City of Anaheim as part of an audit of the New Development Element of the City of Anaheim's ("City") Storm Water Program. The meetings with City staff included reviews of 21 Water Quality Management Plans ("WQMPs") approved by the City over the past three years and visits to 10 sites where approved WQMPs were in various stages of implementation. As part of the audit, Regional Board staff reviewed information previously submitted as part of the Annual Progress Report in the form of the City's Program Effectiveness Assessment ("PEA") and the City's July 2003 Local Implementation Plan ("LIP").

The principal purpose of the audit was to evaluate the City's compliance with the conditions and requirements of the Orange County Municipal Separate Storm Sewer System ("MS4") Permit, Order Nos. R8-2009-0030 and R8-2002-0010, NPDES Permit No. CAS618030. Both Order Nos. R8-2009-0030 and R8-2002-0010 were considered because the City activities that were reviewed during the audit occurred during periods when each of these orders were in effect. Regional Board staff's conclusions are as follows:

1. *City staff generally does well at documenting the City's approval of final WQMPs.* All final WQMPs reviewed by Regional Board staff had some form of formal approval indicated on them. In several cases, the formal approval consisted of a generic title page attached to the WQMP with an approval, approval date, and a unique identification number indicated on it. Due to the longevity of projects and the possibility that information management systems may be changed over a

project's useful life, Regional Board staff believes that it would be helpful to include conventional project information on the approval page, such as site address or project name, in order to strengthen the City's documentation process.

2. *City staff appears to have consistently required the preparation of preliminary or conceptual project WQMPs prior to project approval.* Regional Board staff did not observe any evidence to the contrary.

3. *The City lacks protocols to objectively verify the efficacy of small, non-proprietary structural treatment control BMPs.* A typical strategy for small projects, observed by Regional Board staff during the audit, was to infiltrate the 'first-flush' in landscaped areas. However, due to the relatively small quantities of treatment volumes and subtle grades, it was difficult to verify that the treatment volume could be captured and infiltrated as alleged in the WQMPs based on visual inspections. In many cases, visual inspections were complicated by the possibility that the BMP had been misidentified in the WQMP or it appeared that the BMP was unable to contain any meaningful amount of storm water runoff. In such cases, Regional Board staff recommended that the City require flow tests in order to verify the WQMP preparer's claims.

4. *City staff needs to give greater consideration to the logistics of operating, maintaining, and inspecting structural treatment control BMPs when approving WQMPs.* These logistical considerations apply not only to the parties responsible for BMP operation and maintenance but also to the City's capacity to oversee those party's efforts through inspections of BMPs. In the most egregious instance, City staff approved the construction of a linear sub-surface infiltration gallery located across the front of a multi-family residential complex. This infiltration gallery was buried beneath a set of planters containing trees, sidewalks directly accessing several of the units, and utilities. Because the top of the gallery is approximately 10-feet below finished grade, the water level and working condition of the infiltration gallery cannot be reliably verified by visual means using the inspection ports and may also require the use of specialized tools or equipment. The trees' roots may eventually perforate the geotextile that encloses the gallery and allow the intrusion of fines. With an invert depth that is over 12-feet below finished grade, the eventual failure and subsequent rehabilitation of the gallery will result in a disruptive excavation effort that will damage some of the most attractive elements of the complex - the hardscape and mature vegetation – and interrupt ingress and egress to several of the residential units.

   Regional Board staff acknowledges that the preceding is an atypical example of problems associated with limited consideration of inspection and operation and

maintenance of BMPs. More common problems observed include: the need for specialized tools and equipment for inspection and maintenance, and the related storage of and access to those items; the need for coordination for access with property owners or managers; incrementally time-consuming personnel maneuvers to complete inspections (i.e. climbing, negotiating vegetation, removing/replacing covers and grates, etc.); and disruption of pedestrian or vehicle traffic. While these problems are mundane, as the number of facilities grows over time, they may strain the City's resources and affect its ability to comply.

5. *City staff has, but does not consistently practice, a rational approach to relating its conclusions in its CEQA documents to its Storm Water Program.* During the group interview, City staff demonstrated their understanding for the need to provide logical explanations to the public and other interested parties as to how its Storm Water Program addresses the water quality impacts of projects early in the City's project approval process. However, in reviewing one of the City's most recent Environmental Impact Reports, Regional Board staff found that the City had largely declared that a major transportation infrastructure project would have no water quality impacts, but then described in a very general, and seemingly contradictory way, how its Storm Water Program would address water quality issues.

6. *City staff makes a concerted effort to apply published engineering criteria in the design and construction of non-proprietary structural treatment control best management practices ("BMPs"), however, the results are mixed.* While the WQMPs reviewed by Regional Board staff demonstrate an effort to apply published engineering criteria, the effort is not consistently rigorous. Approved WQMPs did not always document even basic volumetric or flow-based sizing calculations. Secondary calculations, such as for surface area of infiltration-type BMPs or channel cross-sections and related flow velocities for vegetated swales, are not consistently documented. Assumed infiltration rates were based on undisclosed sources of information and assumed antecedent moisture conditions, if applicable, were not stated.

   In one instance, at the City's Nohl Canyon Water Storage Tank, treatment calculations were made based on the assumption that the treatment volume would spread out over an adjacent, sloped 300,000 square-foot open space area and infiltrate. Regional Board staff's visit to this site revealed the assumption to be unfounded; the sheer size and uneven topography of the area does not allow the discharge to spread as assumed. At several other sites, short-circuiting of flows in vegetated swales was also evident in the configuration of inlets and outlets.

7. *City staff uses a casual approach towards the use of proper terminology for identifying structural treatment control BMPs.* City staff's statements during group and individual interviews indicate that the terminology used to describe a structural BMP is less important to City staff than whether or not the BMP has been sized, designed, and constructed according to engineering criteria for another BMP. For example, it should not matter that a WQMP identifies a BMP as "porous landscape detention" if the BMP was sized, designed, and constructed using engineering criteria for a "vegetated buffer".

   In fact, several such analogous scenarios appear to have occurred. In one instance, both of the terms "vegetated strips" and "porous landscape detention" were used to describe the same constructed BMPs. This created some confusion as to the number of facilities that were supposed to be on the site. Due to the mismatch between terminology and engineering criteria employed in these situations, there was insufficient time to investigate the sizing, design, and construction of any finished structural BMP inspected by Regional Board staff to determine what terminology *should have* been used, and then use the related criteria to evaluate the BMPs.

Most of the above conclusions identify deficiencies of various degrees. At this time, Regional Board staff does not believe that all of these deficiencies rise to such a level that they individually constitute violations. However, Provision II.1. of Order No. R8-2002-0010 requires co-permittees to "Implement management programs, monitoring programs, implementation plans and all BMPs outlined in the DAMP within each respective jurisdiction, and take any other actions as may be necessary to meet the [maximum extent practicable ("MEP")] standard."

Regional Board staff believes that the City's acceptance and use of improper terminology to describe structural BMPs; the inconsistent application of tested engineering criteria (as referenced in the 2003 DAMP) to evaluate proposed and constructed structural BMPs; and failure to fully document the design basis of proposed structural BMPs do not constitute best management practices and do not meet the MEP standard. Regional Board staff has therefore determined that the City of Anaheim has violated Provision II.1. of Order No. R8-2002-0010.

The 2003 DAMP generally requires that permittees evaluate structural BMPs at the time that they are proposed and after they are constructed. Using proper terminology to describe structural BMPs, applying tested engineering criteria, and fully documenting their design basis are interrelated practices that facilitate permittees' evaluations to the benefit of both the permittees and project proponents.

Evaluating a structural BMP against objective, tested engineering criteria allows for the efficient assessment of the effectiveness of a project's BMPs without necessarily having

to resort to after the fact effluent testing. This evaluation method allows for a fair presumption that the proposed or completed BMP will perform in a manner comparable with a tested design. Being unable to quickly match the term used to identify a BMP with engineering criteria will make such evaluations unnecessarily complicated.

Evaluations of constructed structural BMPs may be impossible in situations where the WQMP improperly identifies a structural BMP and inadequately documents its design basis and/or where other information sources, such as construction plans, are lost over time. Over the life of a project, the WQMP may become an unreliable source of information for assessing the effectiveness of a BMP's operation and maintenance and may negatively affect a permittee's ability to enforce the implementation of the WQMP.

By November 24, 2010, please submit to this office a response letter, identifying the steps that have been/will be taken by the City to address the deficiencies and violations noted in this audit report. If you have any questions, please contact Adam Fischer at afischer@waterboards.ca.gov or at (951) 320-6363.

Sincerely,

Mark E. Smythe
Section Chief
Coastal Storm Water Unit

cc: County of Orange – Richard Boon
City of Anaheim – Keith Linker

7004 1160 0000 2179 4516

U.S. Postal Service™

CERTIFIED MAIL™ RECEIPT

(Domestic Mail Only; No Insurance Coverage Provided)

For delivery information visit our website at www.usps.com®

OFFICIAL USE

Postage	$
Certified Fee	
Return Reciept Fee (Endorsement Required)	
Restricted Delivery Fee (Endorsement Required)	
Total Postage & Fees	$

Postmark Here

Sent To: City of Anaheim

Street, Apt. No.; or PO Box No.: 200 South Anaheim Blvd.

City, State, ZIP+4: Anaheim CA 92805

PS Form 3800, June 2002 See Reverse for Instructions

California Regional Water Quality Control Board
Santa Ana Region

Linda S. Adams
Secretary for Environmental Protection

3737 Main Street, Suite 500, Riverside, California 92501-3348
Phone (951) 782-4130 • FAX (951) 781-6288
www.waterboards.ca.gov/santaana

Arnold Schwarzenegger
Governor

October 28, 2010

Keith Linker
City of Anaheim
200 South Anaheim Boulevard
Anaheim, CA 92805

RESULTS OF THE CITY OF ANAHEIM STORM WATER PROGRAM AUDIT – NEW DEVELOPMENT ELEMENT – AUGUST 25, 26, AND 31, 2010 AND SEPTEMBER 1 AND 13, 2010

Dear Mr. Linker:

This letter summarizes Regional Board staff conclusions regarding the New Development Element of the City of Anaheim's ("City") Storm Water Program following an audit on August 25, 26, and 31, 2010 and September 1 and 13, 2010. These conclusions are based on information gathered by Regional Board staff during the audit, as well information previously submitted as part of the Annual Progress Report in the form of the City's Program Effectiveness Assessment ("PEA") and the City's July 2003 Local Implementation Plan ("LIP").

The principal purpose of the audit was to evaluate the City's compliance with the conditions and requirements of the Orange County Municipal Separate Storm Sewer System ("MS4") Permit, Order Nos. R8-2009-0030 and R8-2002-0010, NPDES Permit No. CAS618030. Both Order Nos. R8-2009-0030 and R8-2002-0010 were considered because the City activities that were reviewed during the audit occurred during the periods when each of these orders were in effect. Regional Board staff's conclusions are as follows:

City staff makes a concerted effort to apply published engineering criteria in the design and construction of non-proprietary structural treatment control best management practices ("BMPs"), however, the results are mixed. While the WQMPs reviewed by Regional Board staff demonstrate an effort to apply published engineering design criteria, the effort is not consistently rigorous. WQMPs did not always document even basic volumetric or flow-based sizing calculations. Secondary calculations, such as for surface area of infiltration-type BMPs or channel cross-sections and related flow velocities for vegetated swales, are not consistently documented. Assumed infiltration rates were based on undisclosed sources of information and assumed antecedent moisture conditions, which can dramatically affect infiltration rates, were not stated.

In one instance, at the City's Nohl Canyon Water Storage Tank, treatment calculations were made based on the assumption that the treatment volume would spread out over an adjacent, sloped 300,000 square-foot open space area and infiltrate. However, the sheer

size and uneven topography of the area does not allow the discharge to spread as assumed. An alternative method would likely have resulted in the need for further grading to promote infiltration. Short-circuiting of flows in vegetated swales was also observed on several sites.

City staff uses a casual approach towards the use of proper terminology for identifying structural treatment control BMPs. City staff's statements during group and individual interviews indicate that the terminology used to describe a structural BMP is less important than whether or not the BMP has been sized, designed, and constructed according to engineering criteria for another BMP. For example, it should not matter that a WQMP identifies a BMP as "porous landscape detention" if the BMP was sized, designed, and constructed using engineering criteria for a "vegetated buffer".

In fact, several such analogous scenarios appear to have occurred. In one instance, both of the terms "vegetated strips" and "porous landscape detention" were used to describe the same constructed BMPs. This created confusion as to the number of facilities that were supposed to be on the site. Due to the mismatch between terminology and engineering criteria employed in these situations, there was insufficient time to investigate the sizing, design, and construction of any finished structural BMP inspected by Regional Board staff to determine what terminology *should have* been used, and then use the related criteria to evaluate the BMPs. This additional layer of investigation is only one example of the complications that could arise due to City staff's casual approach.

Evaluating a finished structural BMP against objective, tested engineering criteria is an efficient method of evaluating the effectiveness of a project's BMPs without necessarily having to resort to after the fact effluent testing. This evaluation method allows for a fair presumption that the finished BMP will perform in comparable manner with a tested design. Being unable to quickly match the term used to identify a BMP with engineering criteria due to the incorrect use of a term, however, will make such evaluations unnecessarily complicated. Evaluations may even be impossible in situations where the WQMP inadequately documents the design basis for a BMP and/or where other information sources, such as construction plans, are lost over time.

City staff needs to give greater consideration to the logistics of operating, maintaining, and inspecting structural treatment control BMPs when approving WQMPs. These logistical considerations apply not only to the parties responsible for BMP operation and maintenance but also to the City's capacity to oversee those party's efforts through inspections of BMPs. In the most egregious instance, City staff approved the construction of a linear sub-surface infiltration gallery located across the front of a multi-family residential complex. This infiltration gallery was buried beneath a set of planters containing trees, sidewalks directly accessing several of the units, and utilities. Because the top of the gallery is approximately 10-feet below finished grade, the water level and working condition of the infiltration gallery cannot be reliably verified by visual means using the inspection ports and may also require the use of specialized tools or equipment. The trees' roots may eventually perforate the geotextile that encloses the gallery and allow the intrusion of fines. With an invert depth

that is over 12-feet below finished grade, the eventual failure and subsequent rehabilitation of the gallery will result in a disruptive excavation effort that will damage some of the most attractive elements of the complex - the hardscape and mature vegetation – and interrupt ingress and egress to several of the residential units.

Regional Board staff acknowledges that the preceding is an atypical example of problems associated with limited consideration of inspection and operation and maintenance of BMPs. More common problems observed include: the need for specialized tools and equipment for inspection and maintenance, and the related storage of and access to those items; the need for coordination for access with property owners or managers; incrementally time-consuming personnel maneuvers to complete inspections (i.e. climbing, negotiating vegetation, removing/replacing covers and grates, etc.); and disruption of pedestrian or vehicle traffic. While these problems are mundane, as the number of facilities grows over time, they may strain the City's resources and affect its ability to comply. With better foresight, and possibly written maintenance standards and policies, these problems could be avoided or minimized.

The City lacks protocols to objectively verify the efficacy of small, non-proprietary structural treatment control BMPs. A typical strategy for small projects, observed by Regional Board staff during the audit, was to infiltrate the 'first-flush' in landscaped areas. However, due to the relatively small quantities of treatment volumes and subtle grades, it was difficult to verify that the treatment volume could be captured and infiltrated as alleged in the WQMPs based on visual inspections. In many cases, it seemed that the BMP had been misidentified or it appeared that the BMP was unable to contain any meaningful amount of storm water runoff. In these cases, Regional Board staff recommended that the City require flow tests in order to verify the WQMP preparer's claims.

City staff appears to consistently require the preparation of preliminary or conceptual project WQMPs prior to project approval. Regional Board staff could find no evidence to the contrary.

City staff has, but does not consistently practice, a rational approach to relating its conclusions in its CEQA documents to its Storm Water Program. During the group interview, City staff demonstrated their understanding for the need to provide logical explanations to the public and other interested parties as to how its Storm Water Program addresses the water quality impacts of projects early in the City's project approval process. However, in reviewing one of the City's most recent Environmental Impact Reports, Regional Board staff found that the City had largely declared that a major transportation infrastructure project would have no water quality impacts, but then described in a very general, and seemingly contradictory way, how its Storm Water Program would address water quality issues.

City staff generally does well at documenting the City's approval of final WQMPs. All final WQMPs reviewed by Regional Board staff had some form of formal approval indicated on them. In several cases, the formal approval consisted of a generic title page attached to the

WQMP with an approval, approval date, and a unique identification number indicated on it. Due to the longevity of projects and the possibility that information management systems may be changed over a project's useful life, Regional Board staff believes that it would be helpful to include conventional project information on the approval page, such as site address or project name, in order to strengthen the City's documentation process.

By November 24, 2010, please submit to this office a response letter, identifying the steps that have been/will be taken by the City to address the deficiencies noted in this audit report. If you have any questions, please contact Adam Fischer at afischer@waterboards.ca.gov or at (951) 320-6363.

Sincerely,

Mark E. Smythe
Section Chief
Coastal Storm Water Unit

cc: County of Orange – Richard Boon

Attachment A

California Regional Water Qua
Santa Ana Regio

Linda S. Adams
Secretary for Environmental Protection

3737 Main Street, Suite 500, Riverside, Califo
Phone (951) 782-4130 • FAX (951) 781-6288 • T
www.waterboards.ca.gov/santa

U.S. Postal Service
CERTIFIED MAIL RECEIPT
(Domestic Mail Only; No Insurance Coverage Provided)
For delivery information visit our website at www.usps.com
OFFICIAL USE

Postage	$
Certified Fee	
Return Receipt Fee (Endorsement Required)	
Restricted Delivery Fee (Endorsement Required)	

Postmark Here

7008 1140 0002 4103 1691

DEEPAK MOORJANI
PW DIRECTOR
CITY OF BEAUMONT
550 E. 6TH ST.
BEAUMONT, CA 92223

PS Form 3800, August 2006 See Reverse for Instructions

June 10, 2010

Mr. Deepak Moorjani, Public Works Director
City of Beaumont
550 E. 6th St.
Beaumont, CA 92223

RETUR

NOTICE OF VIOLATION OF THE AREAWIDE URBAN STORM WATER RUNOFF PERMIT FOR RIVERSIDE COUNTY AND THE INCORPORATED CITIES, NPDES PERMIT NO. CAS618033, ORDER NO. R8-2010-0033 (MS4 PERMIT)

Dear Mr. Moorjani:

On May 12, 2010, we conducted a focused program evaluation of the City of Beaumont's storm water program. We spoke to the following City staff during the program evaluation: Thomas Arce, Hisam Baqai, Christina Bowser, Rob Owen, Cynthia Overby, Kishen Prathivadi, Chris Trinidad, Ponce Yambot and Anna. Please note that this evaluation only assessed the City's New Development Program and did not evaluate other elements of the MS4 program. Our discussions with your staff focused on the City's review and approval of Water Quality Management Plans (WQMPs) and other associated activities. Staff also conducted inspections of several sites with approved WQMPs.

Overall, staff found that the City is implementing the New Development program element of the MS4 Permit. It appears that the City has made improvements to this program element since the 2006 program evaluation. We noticed an increased collaboration among planners and engineers of the Public Works Department. However, staff found a few areas of violations of the MS4 permit. These include the following:

1. The City did not comply with Section XII.A.8 of the MS4 Permit by failing to verify implementation of project-specific WQMPs prior to issuance of certificates of occupancy as described in Section 2.2 of the WQMP Guidance[1].
   a. We reviewed the WQMP for the Beaumont Gateway Plaza, a commercial facility which has partial occupancy. Our May 12, 2010 inspection indicated that the site is approximately 75% completed and it has at least one tenant, a Jack in the Box restaurant. The WQMP stated that one of the post-construction BMPs for the site is a Stormwater Management Filter – Storm Gate with high flow bypass and grass swales that connect to the storm drain system. We could not locate this BMP during our inspection. Runoff from the site sheet flows to a drainage

[1] Riverside County Water Quality Management Plan for Urban Runoff

swale. Subsequent communication with City staff and the site's owner indicated that the BMP has not been installed. The site appears to have different post-construction BMPs from those identified in the final WQMP that we reviewed.

b. We understand that Code Enforcement staff inspects post-construction BMPs in commercial and industrial areas initially as part of their routine inspections. Although Code Enforcement staff stated that they occasionally get called to handle issues or complaints, it was not evident during the audit if Code Enforcement is also responsible for verifying post-construction BMPs for residential areas.

2. The City did not comply with Section XII.A.8 of the MS4 Permit by not requiring that a WQMP be prepared for appropriate municipal projects. City staff showed drawings of an upcoming street improvement project to be implemented adjacent to a new park. The drawing included an infiltration swale. It was not clear why the street improvement project was considered as a separate project from the new park project as the infiltration trench could be considered part of the runoff treatment system for the park. We understand that a WQMP was not prepared for the park or the associated street improvement project. Although several drawings were produced that contained an infiltration swale, there was no WQMP. These drawings did not have other necessary information that should be included in a WQMP, such as potential pollutants, selected BMPs to address pollutants of concern, sizing or other selection criteria for the BMPs, etc.

3. The City did not comply with Section XII.A.8 of the MS4 Permit by failing to ensure that long term operation and maintenance mechanisms are in place prior to project closure or issuance of certificates of occupancy. Three WQMPs were reviewed; one project had not started and the other two had occupants. The WQMPs reviewed did not appear to contain the necessary information to ensure long term operation and maintenance of post-construction BMPs as discussed below:

   a. Staff reviewed the WQMP for the multi-family development on Illinois Avenue. The WQMP we reviewed did not indicate if it was a draft, tentative, or final version. The WQMP only had the printed name of the owner, it was not dated and was not signed by a responsible party. The table of contents, apparently taken from a template, did not clearly specify the non-applicable sections. The contents of some of the sections were not consistent with the section titles. The WQMP did not include any agreement between the owner and the City with regards to funding, operation and maintenance of the post-construction BMPs. This should be a very important part of the WQMP. The WQMP stated that infiltration basins and filters have been selected as the post-construction BMPs. However, the WQMP did not specify or delineate the locations of the filters. A site inspection indicated that the site is currently an open field and construction has not started.

   b. Staff reviewed the final WQMP for Beaumont Gateway Plaza. The WQMP was signed. The WQMP identified the following post-construction BMPs: 1) Stormwater

Management Storm Filter – Storm Gate with high flow bypass and grass swales which connect to storm drain system, 2) Walkways and in between parking spaces located in the main parking lot are to be lined with planter boxes. Section VI, titled "Operation and Maintenance Responsibility for Treatment Control BMPs" must identify operation and maintenance responsibilities. This section did not contain the needed information. There was a notation that the Operation and Maintenance Plan will be completed and addressed at the time of the final WQMP submittal. The document reviewed was labeled as the Final WQMP. In Section VII, entitled Funding, the second paragraph specifies the POA to be responsible for funding and operation of the BMPs identified in the WQMP Exhibit. However, no exhibit was clearly identified. Appendix G, the CC&R and Exhibit B, the site plan do not specify the responsibilities for maintaining the post-construction BMPs. We recommend that the City require future WQMPs to include a site layout that identifies the location of the post-construction BMPs, description of maintenance activities and other applicable information identified in Section 4.6 of the WQMP Guidance.

c. Staff reviewed the WQMP for to the Dangelo Pipe facility expansion project. The 4.38 acre site had a building expansion that more than doubled its size. The WQMP was not signed by the owner. The WQMP included explanations of why certain aspects of site design were chosen. The main treatment control for the project was a detention basin of 6,840 cubic feet. The diagram of the basin in the WQMP was only conceptual. There were a number of BMP sheets for source control BMPs included in the WQMP. However, there was no BMP sheet included in the WQMP for an extended detention basin. The WQMP stated that the post-construction BMPs will be maintained by the property owner. Staff did not find any proof that the BMPs had been recorded or any other proof of a permanent record for the BMPs. Please indicate how post-construction BMPs are going to be tracked.

   An inspection of the site shows construction to be complete and the facility is in operation. The basin is in place, but it is not being maintained and an erosion gully leading into the basin was noted. The City should require the facility to implement effective erosion controls.

4. The City failed to verify that treatment control BMPs are sized according to Section XII.D.4 of the MS4 Permit and consistent with Section 4.5.3 of the WQMP Guidance. Staff's review of the final WQMP for Beaumont Gateway Plaza showed that the engineering calculations for volume or flow-based BMPs were not found in Appendix F, labeled "Treatment BMP Sizing Calculations".

We have the following additional comments and recommendations to improve the City's WQMP approval process:

1. We commend the City's implementation of an innovative drain design standard that promotes low flow onsite infiltration. For infiltration BMPs, please consider minimizing compaction or evaluate the need for sub-grade compaction (see recommendations in the Southern California LID Manual; this document is available at: http://www.casqa.org/LID/SoCalLID/tabid/218/Default.aspx.)

2. We understand that the Development Review Committee, including staff from Planning and Public Works, meet during the preliminary stages of a project submittal to discuss various issues. We strongly support the Public Works Department staff's early review of the WQMP. This would ensure that a sufficient footprint is available to meet the WQMP requirements. This is critical for effectively implementing a landscape-based low impact development BMP.

3. We recommend that the City prepare a flowchart that details the different steps from application to approval including the parties involved, such as the reviewers and approvers of the application. The flowchart should also include the parties responsible for each step and the name and signature of the responsible party. This would help in identifying the reviewers and approvers of the document so that in cases where a resubmittal, another review or a modification is warranted, it would be less cumbersome to find out prior history or comments.

4. As mentioned in violations 1 and 3 above, the City does not appear to track the implementation of BMPs identified in the WQMPs including verification of construction and subsequent inspection and/or monitoring of post-construction BMPs. We recommend that the City proactively monitor ownership and responsibility for long term operation and maintenance of approved post-construction BMPs including projects/sites that have foreclosed and/or suspended the projects, especially, if structural post-construction BMPs have been built.

5. We recommend a regular training program for the planners, engineers, and inspectors on the WQMP requirements, including the respective roles in its review and implementation.

Please submit a schedule and a program to us by July 19, 2010 indicating the actions that have been, or will be taken to bring the City into full compliance with the terms and conditions of the MS4 Permit. Failure to submit the above requested information or comply with the requested actions may result in further enforcement action.

If you have any question, please contact Maria Macario at (951) 321-4583, Michael Roth at (951) 320-2027 or Milasol Gaslan at (951) 782-4419.

Sincerely,

Michael J. Adackapara
Division Chief

Cc: Kirchen Prathivadi, City of Beaumont,
Jason Uhley, Riverside County Flood Control District NPDES Coordinator

U.S. Environmental Protection Agency
Region 9
Water Division
75 Hawthorne Street
San Francisco, CA 94105-3901

MUNICIPAL SEPARATE STORM SEWER SYSTEM (MS4) PHASE 2 COMPLIANCE INSPECTION

CITY OF BRAWLEY, CALIFORNIA
WDID 7A132003M03

FINAL INSPECTION REPORT

Inspection Date:
June 4, 2012

Final Report Date:
August 7, 2012

CONTENTS

Page

SECTION 1.0 INTRODUCTION 1

SECTION 1.1 PERMIT AND STORM WATER MANAGEMENT PLAN 1
SECTION 1.2 PURPOSE OF INSPECTION 1
SECTION 1.3 PROGRAM AREAS EVALUATED 2
SECTION 1.4 INSPECTION PROCESS 2

SECTION 2.0 PROGRAM EVALUATION OBSERVATIONS 3

SECTION 2.1 PROGRAMMATIC IMPLEMENTATION 3
SECTION 2.2 ILLICIT DISCHARGE DETECTION AND ELIMINATION 6
SECTION 2.3 CONSTRUCTION SITE STORM WATER RUNOFF CONTROL 8
SECTION 2.4 POST-CONSTRUCTION STORM WATER MANAGEMENT IN NEW DEVELOPMENT AND REDEVELOPMENT 11

SUMMARY OF FINDINGS 15

APPENDIX A: CA PHASE II MS4 PERMIT 2003-0005-DWQ (CAS000004)
APPENDIX B: CITY OF BRAWLEY STORM WATER MANAGEMENT PLAN (SWMP)
APPENDIX C: INSPECTION AGENDA
APPENDIX D: INSPECTION SIGN-IN SHEET
APPENDIX E: EXHIBIT LOG
APPENDIX F: PHOTOGRAPH LOG

Section 1.0 Introduction

On June 4, 2012, the U.S. Environmental Protection Agency's (EPA) contractor, PG Environmental, LLC, and staff from the Colorado River Basin Regional Water Quality Control Board (RWQCB; hereinafter, collectively, the Inspection Team) conducted an inspection of the City of Brawley, California (hereinafter, City), Municipal Separate Storm Sewer System (MS4) Program.

According to the 2010 U.S. Census, the City had a population of 24,953 people. The City is located in Imperial County within the Imperial Valley at an elevation below sea level. The land surrounding the City is flat and predominately used for agriculture. As described by City staff, the New River flows along the western edge of the City and is the primary receiving water for discharges from the MS4.

Section 1.1 Permit and Storm Water Management Plan

Discharges from the City's MS4 are regulated under California State Water Resources Control Board Order No. 2003–0005–DWQ, National Pollutant Discharge Elimination System (NPDES), General Permit No. CAS000004, *Waste Discharge Requirements for Storm Water Discharges from Small Municipal Separate Storm Sewer Systems* (hereinafter, the Permit), issued April 30, 2003. According to City staff, the City obtained coverage under the Permit in 2008 and has been developing its MS4 program since that time. A copy of the Permit is included as Appendix A.

The Permit authorizes the City to discharge storm water runoff and certain non-storm water discharges from its small MS4 to waters of the United States, under the Permit's terms and conditions. Part D.1 of the Permit requires the City to develop, implement, and enforce an effective storm water management plan (SWMP) designed to reduce the discharge of pollutants from the regulated small MS4 to the maximum extent practicable and to protect water quality.

Pursuant to this requirement, the City developed and has been operating under the *City of Brawley Storm Water Management Plan* (hereinafter, City's SWMP) since 2008. The City's SWMP was created from a regional template provided by the Riverside County Flood Control and Water Conservation District and the County of Riverside. A copy of the City's SWMP is included as Appendix B.

Section 1.2 Purpose of Inspection

The purpose of the inspection was to obtain information that will assist EPA and the RWQCB in assessing the City's compliance with the requirements of the Permit and associated City SWMP, as well as the implementation status of the City's current MS4 program.

Section 1.3 Program Areas Evaluated

The inspection included an evaluation of the City's compliance with all six of the Minimum Control Measures (MCMs) included in the Permit, but primarily focused on the four MCMs listed below:

MCM 3	Illicit Discharge Detection and Elimination (IDDE);
MCM 4	Construction Site Storm Water Runoff Control;
MCM 5	Post-Construction Storm Water Management in New Development and Redevelopment; and
MCM 6	Pollution Prevention/Good Housekeeping for Municipal Operations.

During the inspection, the Inspection Team also discussed elements of the City's program for MCM 1 Public Education and Outreach of Storm Water Impacts and MCM 2 Public Involvement/Participation.

Section 1.4 Inspection Process

The Inspection Team obtained information through a series of interviews with representatives from the City's Public Works Department, along with a series of site visits, record reviews, and field verification activities. The EPA contractor representative presented her credentials at the opening meeting of the inspection. Dry weather conditions were experienced throughout the inspection activities. A copy of the tentative agenda distributed prior to the inspection is included as Appendix C.

It should be noted that this inspection report does not attempt to comprehensively describe all aspects of the City's MS4 program, fully document all lines of questioning conducted during personnel interviews, or document all in-field verification activities conducted during the site visits.

A copy of the inspection sign-in sheet is included as Appendix D. The primary representatives involved in the inspection were the following:

City of Brawley MS4 Inspection: June 4, 2012	
City of Brawley Public Works Department	Yazmin Arellano, Public Works Director Guillermo Sillas, Associate Civil Engineer Andrew Escobar, Wastewater Chief Operator David Arvizu, Pretreatment Coordinator Ruben Mireles, Operations Division Manager Pete Sanchez, Equipment Maintenance Supervisor

City of Brawley MS4 Inspection: June 4, 2012	
Colorado River Basin Regional Water Quality Control Board	John Carmona, Senior Water Resources Control Engineer
EPA Contractor	Candice Owen, PG Environmental, LLC

Section 2.0 Program Evaluation Observations

This inspection report identifies program deficiencies and potential violations, and is not a formal finding of violation. Potential violations are areas not fulfilling requirements of the Permit and/or City SWMP. Program deficiencies are areas of concern for successful program implementation or areas that, unless action is taken, have the potential to result in non-compliance in the future. This report also provides recommendations for improved program implementation with the associated findings.

During the evaluation, the Inspection Team obtained documentation and other supporting evidence regarding compliance with the Permit and associated SWMP. The City's SWMP contains a number of best management practices (BMPs), objectives, and implementation timetables with implementation details, measurable goals and schedules.

Referenced documentation used as supporting evidence is provided in Appendix E, the Exhibit Log, and photo documentation is provided in Appendix F, the Photograph Log.

Section 2.1 Programmatic Implementation

As stated at Part D of the Permit, "[t]he permittee shall maintain, implement, and enforce an effective SWMP, and develop adequate legal authority to implement and enforce the SWMP, designed to reduce the discharge of pollutants from the permitted MS4 to MEP [maximum extent practicable] and to protect water quality." The program must include, at a minimum, the specific requirements in Part D(1)–(4) of the Permit.

Potential Violations

2.1.1 The City's SWMP was not updated to reflect the current storm water program. Section D of the Permit states that the "SWMP shall be revised to incorporate any new or modified BMPs or measurable goals developed through the Permittee's annual reporting process."

Based on discussions with City staff and review of the City's SWMP, multiple sections of the City's SWMP had not been updated to reflect the current program practices including: (1) Training, (2) IDDE inspections, and (3) Post-construction methods.

As stated above, the City's SWMP was created from a regional template provided by the Riverside County Flood Control and Water Conservation District and the County of Riverside. It appeared to the Inspection Team that multiple areas of the City's SWMP had not been modified from the supplied template to reflect the City's current program. City staff stated that the City's SWMP had not been updated since its creation in 2008. Upon review of the *2010-2011 City of Brawley Stormwater Management Annual Report* the Inspection Team found that it also does not reflect modifications to the City's storm water program.

The City should update the City's SWMP to reflect the current program and include additional changes in the 2011-2012 annual report to the RWQCB.

2.1.2 The City had not established ordinances or other regulatory mechanisms to satisfy the Permit requirements pertaining to IDDE, Construction, and Post-Construction. Part D.2.c.3 of the Permit states the City must "[t]o the extent allowable under State or local law, effectively prohibit, through ordinance, or other regulatory mechanism, non-storm water discharges into the MS4 and implement appropriate enforcement procedures and actions." Additionally, Part D.2.d.1 of the Permit states that the City must have a program that includes at a minimum "[a]n ordinance or other regulatory mechanism to require erosion and sediment controls, as well as sanctions, or other effective mechanisms, to ensure compliance, to the extent allowable under State, or local law." Finally, Part D.2.e.3 of the Permit states the City must "[u]se an ordinance or other regulatory mechanism to address post-construction runoff from new development and redevelopment projects to the extent allowable under State or local law."

The Inspection Team formally requested copies of all ordinances and regulatory mechanisms pertaining to the City's IDDE, Construction, and Post-Construction program areas, but the City did not provide the requested information. City Public Works Director explained that the City did not have an ordinance that addressed IDDE, construction site storm water runoff control, or post-construction runoff from new development and redevelopment projects.

The City should draft and enact an ordinance(s) to address the specific requirements of the Permit.

2.1.3 The City had not conducted training for municipal staff regarding the Permit and storm water pollution prevention. Part D.2.c.5 of the Permit states that the City must "[i]nform public employees, businesses, and the general public of the hazards that are generally associated with illegal discharges and improper disposal of waste." Additionally, Part D.2.f.2 of the Permit states "[u]sing training materials that are available from U.S. EPA, the State, or other organizations, the program [for pollution prevention/good housekeeping for municipal operations] must include employee training to prevent and reduce storm water pollution from activities such as park and open space maintenance, fleet building maintenance, new construction and land disturbances, and storm water system maintenance."

The Inspection Team formally requested "[m]unicipal employee training records and syllabus (i.e., training content) on pollution prevention and IDDE," but the City did not produce the specified records. The City Public Works Director stated that the City had not conducted formalized in-house training for pollution prevention/good housekeeping for municipal operations or detection and elimination of illicit discharges for municipal staff; however, a few staff members had attended California Stormwater Quality Association (CASQA) and California Water Environment Association (CWEA) training sessions. It was the understanding of the Inspection Team that the attended training sessions focused on topics other than MS4 pollution prevention, good housekeeping, and IDDE. City staff did not provide documentation of attendance to the CASQA and CWEA training sessions.

The City should develop a training program including a schedule and syllabus that encompasses both general storm water topics and job-specific pollution prevention training.

2.1.4 The City had not identified person or persons to implement or coordinate the SWMP and Minimum Control Measures. Part D.4 of the Permit states that the "SWMP must identify the person or persons who will implement or coordinate the SWMP, as well as each Minimum Control Measure."

The Inspection Team formally requested "[p]rogram organizational chart and/or a description of the departments involved in the implementation of your MS4 program and their responsibilities," but the City did not provide the specified records. The City's SWMP does not designate individual or departmental responsible parties for SWMP implementation and coordination for each MCM. Through discussions with City staff it appeared to the Inspection Team that since individuals were not designated as being responsible for each MCM component of the program these components were not being fully implemented.

In addition, the Inspection Team observed that coordination was lacking between City departments resulting in issues between allocation of budget and responsible parties affecting the ability of City staff to provide oversight of the storm water program. For example, City staff explained that storm water inspections on private construction sites were not conducted by the Public Works Department because money from the building/planning general fund was used for oversight of private construction sites and that money was not allocated to the Public Works Department. Site inspections of private sites were only conducted by the City Building Inspector who had not had training on erosion and sediment control and did not focus on storm water during his inspections. This situation indicates a need to better define roles within the City's storm water program to ensure that all Permit requirements are being met.

The City should identify individuals to implement and coordinate the SWMP and MCMs. These individuals should also be listed in the City's SWMP.

Program Deficiency

2.1.5 The City did not have written documentation of program implementation. The City lacked documentation for the implementation of the majority of MCMs. Without standard operating procedures (SOPs) and documentation of actions performed, the Inspection Team was unable to fully understand how the City's storm water program was being implemented. Examples of records and SOPs for various MCM components that did not exist include:

- Documentation for IDDE inspections;
- Inventories of construction and post-construction projects;
- Documentation of construction site inspections for both private and public projects;
- Design criteria and plan review checklists for construction and post-construction;
- Best management practices (BMPs), inspection checklists, and inspection records for municipal facilities; and
- Training records.

The Inspection Team recommends the City develop SOPs and record keeping procedures for all aspects of the program to facilitate implementation and ensure retention of programmatic knowledge.

Section 2.2 Illicit Discharge Detection and Elimination

As stated at Part D.2.c(1) of the Permit, the City must "develop, implement, and enforce a program to detect and eliminate illicit discharges (as defined at 40 CFR §122.26(b)(2)) into the regulated Small MS4." The program must include, at a minimum, the specific requirements in Part D.2.c (2)–(6) of the Permit.

During the inspection, the Inspection Team held discussions with City staff regarding the implementation status and documentation of the City's program for IDDE. In addition to discussions, the Inspection Team visited a City MS4 outfall, which is discussed below in Section 2.2.1.

Potential Violation:

2.2.1 The City had not developed and implemented a plan to detect and address non-storm water discharges. Part D.2.c.5 of the Permit states that the City must " [d]evelop and implement a plan to detect and address non-storm water discharges, including illegal dumping, to the system that are not authorized by a separate NPDES permit."

Section 3.1.3 of the City's SWMP states that during the initial Permit term the City will "develop a program for reporting and documenting illegal discharges, spills, and dumping." Section 3.1.3 additionally states that the City will "develop and use internal log forms to document reports of IC/ID [illicit connection/illicit discharge]."

The Inspection Team formally requested "a representative schedule, map, or description of the outfall inspection program, infrastructure inspections, or other methods used to identify illicit discharges and/or connections," but the City did not provide the requested records. The Pretreatment Coordinator stated that he conducts inspections of industrial facilities such as car washes, car maintenance areas, restaurants and commercial trailer washing installations and requires those businesses to stop any activities he sees as potential non-storm water discharges. A schedule and records for these inspections was not provided to the Inspection Team during the inspection.

During the inspection, the Inspection Team along with City staff visited the following City MS4 outfall:

North Imperial Outfall – Near the north end of Dogwood Road

The North Imperial Outfall was one of seven City MS4 outfalls to the New River shown on the "City of Brawley Storm Water Run-Off" map (Appendix E, Exhibit 1). At this location, drainage from the City flowed through a culvert into a trapezoidal concrete channel approximately 550 feet long into another culvert leading to the New River (see Appendix B, Photographs 1 through 5). The actual outfall location to the New River was not accessible due to vegetation and steep slopes. The Inspection Team observed steady flow from the outfall. City staff were under the impression that the steady flow was due to irrigation by City residents; however the Operations Division Manager explained that they had not formally tracked down the sources of the flow to the outfall. City staff elaborated that no formal outfall inspections were conducted at the City's MS4 outfalls, but that the outfalls were periodically cleaned of debris.

In summary, it was not apparent to the Inspection Team that a plan had been developed and implemented to detect and address non-storm water discharges to the City's MS4.

Program Deficiency:

2.2.2 The City had not conducted education and outreach to the public for the IDDE program. Part D.2.c.5 of the Permit states that the City must "[i]nform public employees, businesses, and the general public of the hazards that are generally associated with illegal discharges and improper disposal of waste."

The City Public Works Director stated that public education occurred at schools and fairs in the City, but that the City did not have City-specific educational materials. It was not apparent to the Inspection Team that the City was performing educational outreach to its citizens specific to illegal discharges and improper disposal of waste. Additionally, the City did not have a published hotline for citizens to report illicit discharges, and City staff stated that the only calls they had received from citizens were in regards to over irrigation.

The Inspection Team recommends that they City develop a clear message to educate residents on what constitutes illegal discharge and on the hazards of illegal discharges to water quality and the environment. As a component of outreach, the City could create a

public reporting method such as a telephone hotline or an email address to contact in the event of an illicit discharge.

Section 2.3 Construction Site Storm Water Runoff Control

As stated at Part D.2.d of the Permit, the City must "develop, implement, and enforce a program to reduce pollutants in any storm water runoff to the Small MS4 from construction activities that result in a land disturbance of greater than or equal to one acre." The program must include, at a minimum, the specific requirements in Part D.2.d (1)–(6) of the Permit.

During the inspection, the Inspection Team visited four construction sites—three private sites and one public site. The three private sites included: (1) Del Taco, Car Wash, AM/PM Gas Station, (2) Sun Community Federal Credit Union, and (3) Florentine Collection. The public construction site visited was a City capital improvement project (CIP) referred to as the South 9th Street Paving Project. Findings related to these site visits are detailed in the sections below.

In addition to the site visits, the Inspection Team held discussions with City staff regarding the implementation status and documentation of the City's program for construction site storm water runoff control.

Potential Violations:

2.3.1 The City did not have qualified inspectors conducting erosion and sediment control inspections on private sites. Part D.2.d(6) of the Permit requires the City to develop and implement "procedures for site inspection and enforcement of control measures."

The Inspection Team formally requested "[c]onstruction inspection field checklist" and "[c]onstruction inspection records (most recent Reporting Year)," but the City did not provide the requested records. City staff explained that the City did not have a dedicated storm water inspector for private construction sites; however Public Works Department engineers inspected public construction sites and projects that included activities in the City's right-of-way. City staff further elaborated that the City Building Inspector conducts site inspections for building codes purposes on private construction projects and notifies the Public Works Department if he identifies storm water issues.

City staff explained one instance where a Public Works Department engineer had driven by a construction site and observed a storm water issue. The Public Works Department engineer had issued a Notice of Inspection that called for a halt to all construction until BMPs were installed per Site SWPPP requirements (see Appendix E, Exhibit 2). City staff indicated that this was an isolated event, however, and that Public Works Department did not systematically inspect private construction projects. City staff indicated that problems with City oversight of private construction sites were rooted in the sources of funding for Public Works in relation to Building and Planning. City staff

elaborated that since Public Works did not receive funding to conduct onsite inspections they were not performing inspections for private sites.

The Inspection Team met with the City Building Inspector at the Del Taco, Car Wash and AM/PM Gas Station Construction Site. A write-up of this site visit is included in Section 2.3.4. The City Building Inspector stated that storm water was not a priority during his site visits and that storm water items are not included on the inspection record checklist he uses at private construction sites (Appendix E, Exhibit 3). The Associate Civil Engineer stated that he had inspected the southern perimeter of the site where it met with West Legion Road to ensure City construction site standards were met.

In summary, the City was not providing adequate oversight at private projects to ensure an appropriate level of erosion and sediment control.

2.3.2 Additional observations regarding the City's Construction Site Storm Water Runoff Control Program. It was not apparent to the Inspection Team that the Permit requirements listed below had been fully implemented by the City.

1. Part D.2.d(4) of the Permit requires the City to have "[p]rocedures for site plan review which incorporate consideration of potential water quality impacts."
2. Part D.2.d(2) of the Permit requires the City to implement "[r]equirements for construction site operators to implement appropriate erosion and sediment control BMPs."
3. Part D.2.d(5) of the Permit requires the City to have "[p]rocedures for receipt and consideration of information submitted by the public."

In summary, the City did not present the Inspection Team with formal documentation of procedures for site plan review, erosion and sediment control requirements or procedures dealing with information submitted by the public.

Program Deficiencies:

2.3.4 Site visits to private and public construction sites. Part D.2.d(2) of the Permit requires the City to implement "[r]equirements for construction site operators to implement appropriate erosion and sediment control BMPs."

Private Site: Del Taco, Car Wash and AM/PM Gas Station Construction Site – Highway 86 between Legion Road and Wildcat Drive

The multi-use construction site was the future site of a fast food restaurant, a gas station, and a car wash, and was located directly south of the Sun Community Federal Credit Union Construction Site (see Appendix B, Photograph 6). The site was covered under the California State Water Resources Control Board Order No. 2009–0009–DWQ, NPDES General Permit No. CAS000002, *General Permit for Storm Water Discharges Associated with Construction and Land Disturbance Activities* (hereinafter, Construction General Permit). A site representative could not provide the site SWPPP for the

Inspection Team. A site map including erosion and sediment control practices was located onsite, but had not been updated to reflect current site conditions at the time of the inspection.

Inspection Team observed the following with regard to erosion and sediment controls at the private construction site:

1. Sediment from vehicle tracking was present on the offsite access road trailing along the eastern side of the site (see Appendix B, Photographs 7 and 8). Maintenance was needed on the rumble strip tracking control BMP to remove accumulated sediment.
2. Controls for containment were not in place for the concrete mixing/washout area that the contractor indicated had been recently moved to the observed location (see Appendix B, Photographs 9 and 10). Concrete waste/debris was located directly on soil surface.

Private Site: Sun Community Federal Credit Union Construction Site – Highway 86 between Legion Road and Wildcat Drive

The Sun Community Federal Credit Union construction site was covered under the Construction General Permit (Appendix B, Photograph 11).

The Inspection Team observed the following with regard to erosion and sediment controls at the private construction site:

1. Sediment from vehicle tracking was present on the offsite access road located along the southeastern side of the site (see Appendix B, Photograph 12).
2. Straw wattle BMPs installed along the perimeter of the site were not properly staked or properly entrenched to create a good seal with the ground surface (see Appendix B, Photographs 13 and 14).

Private Site: Florentine Collection Construction Site – Near Panno Road and Willard Avenue

The Florentine Collection construction site was a housing development that consisted of multiple multi-unit buildings (see Appendix B, Photograph 15). City staff explained that the site had initially been abandoned in 2007 or 2008 and had just recently been completed in around February 2012. The development had coverage under the Construction General Permit and was specifically selected by the RWQCB to be inspected as a part of the MS4 inspection. Development on the north side of Panno Road had been completed, but the land on the south side of the road had been abandoned. City staff were unsure of the present owner and were not aware of any current plans to develop the southern portion of the site.

The Inspection Team observed the following with regard to erosion and sediment controls on the southern portion of the private construction site:

1. At least five uncovered/uncontained stockpiles of sand and other materials with no storm water controls were located on the southern portion of the site (see Appendix B, Photographs 16 and 17).

2. A detention basin located in the central portion of the site had not been maintained and vegetation was growing throughout the basin (see Appendix B, Photograph 18).
3. Silt fence, located on three sides of the site, was not attached to stakes and was down in down in some areas (see Appendix B, Photographs 19 and 20).

Public Site: South 9th Street Paving Capital Improvement Project (CIP)
The City's CIP was greater than one acre; however, City staff had been granted a waiver of the Construction General Permit. The Associate City Engineer stated he was in charge of the CIP and that a "mini SWPPP" had been developed by the City's contractor. The project was in the grading stage at the time of the site visit (see Appendix B, Photograph 21).

The Inspection Team observed the following with regard to erosion and sediment controls on the public construction site:

1. Track out was observed by the Inspection Team at the north site entrance/exit (see Appendix B, Photographs 22 and 23).

Section 2.4 Post-Construction Storm Water Management in New Development and Redevelopment

As required by Part D.2.e(1) of the Permit, the City must "develop, implement, and enforce a program to address storm water runoff from new development and redevelopment projects that disturb greater than or equal to one acre…by ensuring that controls are in place that would prevent or minimize water quality impacts." Furthermore, Part D.2.e(4) of the Permit requires the City to "[e]nsure adequate long-term operation and maintenance of [post-construction] BMPs."

Potential Violations:

2.4.1 The City had not formally adopted written standards to ensure controls are in place that would prevent or minimize water quality impacts. As required by Part D.2.e(1) of the Permit, the City must "develop, implement, and enforce a program to address storm water runoff from new development and redevelopment projects that disturb greater than or equal to one acre…by ensuring that controls are in place that would prevent or minimize water quality impacts."

Table 5-1 of the City's SWMP states as a BMP to be implemented by September 2010 "[a]dopt and implement the construction and development BMP guidelines."

The Inspection Team formally requested "post-construction plan review checklist" and "post-construction BMP Manual and design standards," but the City did not produce the specified records. The Associate Civil Engineer stated that the City reviewed designs for post-construction BMPs, but that the procedures and design standards used to perform the reviews were not formalized.

The City should adopt and implement written standards to ensure post-construction controls are properly designed and installed. The City should ensure the City's design community is educated about the requirements of the adopted standards.

2.4.2 The City had not developed procedures to ensure the proper installation of post-construction BMPs. As required by Part D.2.e(1) of the Permit, the City must "develop, implement, and enforce a program to address storm water runoff from new development and redevelopment projects that disturb greater than or equal to one acre…by ensuring that controls are in place that would prevent or minimize water quality impacts."

The Inspection Team formally requested "[r]ecords of post-construction BMP completion and/or maintenance inspections (most recent Reporting Year)," but the City did not provide the requested records. City staff confirmed that the City did not have written procedures or established protocols for conducting and documenting inspections to ensure the proper installation of post-construction BMPs.

The City should develop and document procedures to ensure design requirements properly implemented for post-construction BMPs.

2.4.3 The City had not developed or implemented a program to ensure the long-term operation and maintenance of post-construction BMPs. Part D.2.e(4) of the Permit requires the City to "[e]nsure adequate long-term operation and maintenance of [post-construction] BMPs."

The Inspection Team formally requested "[r]ecords of post-construction BMP inspections (most recent Reporting Year)" and "[r]equirements for long-term operation and maintenance of post-construction BMPs," but the City did not produce the specified records. City staff explained that post-construction BMP maintenance was not currently required in the City, and that the City did not have a program in place to inspect post-construction BMPs to ensure maintenance was being performed. The City Public Works Director indicated that staff visited post-construction BMPs as often as monthly, but that these inspections were not documented.

The City should develop a system to ensure installed post-construction BMPs are properly operating and regular maintenance is performed on BMPs by owners. This system should include an inventory of currently installed BMPs, maintenance guidance, and a method to verify that maintenance has been performed.

<u>Program Deficiencies</u>:

2.4.4 The City had not developed an inventory of public or privately owned post-construction BMPs. The Inspection Team formally requested a "[d]atabase/map of post-construction BMPs with location and maintenance status (differentiating municipally owned and operated from private)," but the City did not provide the requested records. City staff explained that a database or map of post-construction BMPs

within the City did not exist. During field activities conducted as a component of the inspection, the Inspection Team observed one post-construction BMP that had been implemented within the City.

Wal-Mart Development Detention Basin – Near South Brawley Avenue and Wildcat Drive

The detention basin was located on the east side of the Wal-Mart development (see Appendix B, Photograph 24). The basin was gravel-lined and ran the length of the development with multiple inlets on its western side. The City originally stated to the Inspection Team that the detention basin was a retention basin sized to retain the 100-year rainfall event; however during the site visit the Associate City Engineer pointed out the outlet from the basin (see Appendix B, Photographs 25 and 26). He explained that water flowed through the outlet and would eventually be pumped into Imperial Irrigation District pipes that discharged to the New River. The Inspection Team learned from City Staff that the float controlled pump connected to the Imperial Irrigation District pipes was not yet operational and that storm water would not currently discharge to the New River.

Section 2.5 Pollution Prevention/Good Housekeeping for Municipal Operations

As required by Part D.2.e(1) of the Permit, the City must "develop and implement an operation and maintenance program that includes a training component and has the ultimate goal of preventing or reducing pollutant runoff from municipal operations."

The Inspection Team conducted a site visit at one municipal facility, the Public Works Office and Yard (hereinafter, the Yard). Observations from this facility are included in Section 2.5.2.

Potential Violations:

2.5.1 The City had not prepared and implemented a storm water pollution prevention plan (SWPPP) at a maintenance area. Table 6-2 of the City's SWMP states as a BMP that the City will by March of 2010 "[p]repare a model pollution prevention plan for City of Brawley maintenance areas. Implement the plan at maintenance areas."

The Inspection Team formally requested "[e]xample Storm Water Pollution Prevention Plan for those facilities regulated under the MSGP—EPA Inspection Team may select additional sites at the time of the inspection," but the City did not produce the specified record. During the site visit at the Yard, City staff stated that the facility did not have a SWPPP.

2.5.2 Site visit to a City facility. Part D.2.f(1) of the Permit requires the City to "[d]evelop and implement an operation and maintenance program that…has the ultimate goal of preventing or reducing pollutant runoff from municipal operations."

City Public Works Office and Yard – South Western Ave

The Yard was located directly east of the Public Works office (see Appendix F, Photograph 27). City Staff stated the Yard had been moved to this location in 2000. Activities performed at the Yard included vehicle storage and maintenance, bulk storage, and storage of petroleum, chemicals and paints. The Yard did not have coverage under the California State Water Resources Control Board Order No. 97–03–DWQ, NPDES General Permit No. CAS000001, *Waste Discharge Requirements for Discharges Associated with Industrial Activities Excluding Construction Activities* (hereinafter, Industrial General Permit). Based on activities at the Yard, it was unclear to the Inspection Team if the Yard was required to have coverage under the Industrial General Permit. As stated above a SWPPP had not been developed for the Yard, and City staff indicated that storm water inspections were not conducted onsite.

The Inspection Team observed the following with regard to pollution prevention/good housekeeping at the Yard:

1. At least four separate instances of 55-gallon drums and 5-gallon buckets, some without lids, of petroleum and unknown liquids were observed without secondary containment located outdoors (see Appendix F, Photographs 28 through 35).
2. Metal buckets of paint were observed without secondary containment located outdoors in three areas of the Yard (Appendix F, Photographs 36, 37 and 38).
3. Bags of concrete were located outdoors and without overhead coverage (see Appendix F, Photographs 39 and 40).

Program Deficiencies:

2.5.3 Additional potential Pollution Prevention/Good Housekeeping for Municipal Operations deficiencies. The following additional potential deficiency was noted by the Inspection Team:

1. The City had not developed storm water inspection checklists for all municipal facilities, and did not have an inspection schedule.

Summary of Findings

This inspection report identifies potential violations and program deficiencies and is not a formal finding of violation. Potential violations are areas not fulfilling requirements of the Permit and/or the City's SWMP. Program deficiencies are areas of concern for successful program implementation. This report also includes recommendations included in the findings for improved program implementation.

The following potential violations are considered the most significant:

1. The City's SWMP was not updated to reflect the current storm water program.
2. The City had not established ordinances or other regulatory mechanisms to satisfy the Permit requirements pertaining to IDDE, Construction, and Post-Construction.
3. The City had not conducted training for municipal staff regarding the Permit and storm water pollution prevention.
4. The City had not identified person or persons to implement or coordinate the City's SWMP and Minimum Control Measures.
5. The City had not developed and implemented a plan to detect and address non-storm water discharges.
6. The City did not have qualified inspectors conducting erosion and sediment control inspections on private sites.
7. Part D.2.d(4) of the Permit requires the City to have "[p]rocedures for site plan review which incorporate consideration of potential water quality impacts."
8. Part D.2.d(2) of the Permit requires the City to implement "[r]equirements for construction site operators to implement appropriate erosion and sediment control BMPs."
9. Part D.2.d(5) of the Permit requires the City to have "[p]rocedures for receipt and consideration of information submitted by the public."
10. The City had not formally adopted written standards to ensure controls are in place that would prevent or minimize water quality impacts.
11. The City had not developed procedures to ensure the proper installation of post-construction BMPs.
12. The City had not developed or implemented a program to ensure the long-term operation and maintenance of post-construction BMPs.
13. The City had not prepared and implemented a storm water pollution prevention plan (SWPPP) at a maintenance area.
14. The City had not implemented pollution prevention/good housekeeping at the City Public Works Yard.

The following program deficiencies are considered most significant:

1. The City did not have written documentation of program implementation.
2. The City had not conducted education and outreach to the public for the IDDE program.

3. The City had not developed an inventory of public or privately owned post-construction BMPs.
4. The City had not developed storm water inspection checklists for all municipal facilities, and did not have an inspection schedule.

January 8, 2013
CIWQS Place Numbers: NOD Recipients

Sent via email to:

Jim Scanlin, Alameda Countywide Clean Water Program: jims@acpwa.mail.co.alameda.ca.us
Tom Dalziel, Contra Costa Clean Water Program: tdalz@pw.cccounty.us
George Hicks, City of Fairfield: ghicks@ci.fairfield.ca.us
Kevin Cullen, Fairfield-Suisun Sewer District: kcullen@fssd.com
Matt Fabry, San Mateo Countywide Pollution Prevention Program: mfabry@ci.brisbane.ca.us
Adam Olivieri, Santa Clara Valley Urban Runoff Pollution Prevention Program: awo@eoainc.com
Daniel Kasperson, City of Suisun: dkasperson@suisun.com
David Kleinschmidt, City of Vallejo: dkleinschmidt@ci.vallejo.ca.us
Ron Matheson, Vallejo Sanitation & Flood Control District: rmatheson@vsfcd.com

Subject: Notice of Deficiency Pursuant to Provision C.2.f. of Water Board Order No. R2-2009-0074, Municipal Regional Stormwater NPDES Permit

We are sending this letter to certain Permittees covered by the Municipal Regional Stormwater NPDES Permit (MRP) with regard to Provision C.2.f. The MRP regulates stormwater discharges from municipalities and local agencies in Alameda, Contra Costa, San Mateo, and Santa Clara counties and in the cities of Fairfield, Suisun, and Vallejo. This letter:

- Notifies certain Permittees that they failed to implement Provision C.2.f. – Corporation Yard as prescribed by the MRP and requires a response from these Permittees;
- Notifies certain Permittees that their compliance with Provision C.2.f. – Corporation Yard is unclear and requires a response from these Permittees;
- Provides our expectations for future implementation of Provision C.2.f. of the MRP; and
- Provides a summary of our review of Provision C.2.f. – Corporation Yard in the 2012 Annual Report;

MRP Requirements

Provision C.2.f. – Corporation Yard BMP requires Permittees to report on implementation of the site specific Stormwater Pollution Prevention Plan for their corporation yard, the results of inspections (at least one inspection before the start of the rainy season), and any follow-up actions on the results of the inspections in the Annual Report.

In each Permittee's 2011-2012 Annual Report, we looked (1) to see if the corporation yards were inspected at least once (with the first inspection before the rainy season), (2) for inspection findings/results, and (3) for follow-up actions on the inspection findings.

Notice of Deficiency for failure to implement Provision C.2.f. – Corporation Yard

The following Permittees failed to comply with Provision C.2.f. – Corporation Yard:

Alameda County

Permittee	***Violation***
Livermore	Did not inspect before the 2011 rainy season. (Inspected on June 28, 2012.)
Oakland	Did not inspect before the 2011 rainy season. (All three yards were inspected in June 2012.)
Pleasanton	Did not inspect before the 2011 rainy season. (Inspected on June 12, 2012.)
Union City	Did not inspect before the 2011 rainy season. (Inspected four times between March 19, 2012 and June 5, 2012.) Corrective actions were not implemented in a timely manner.

Contra Costa County

Permittee	***Violation***
Clayton	Did not inspect before the 2011 rainy season. (Inspected on February 23, 2012.)
Contra Costa County	Did not inspect before the 2011 rainy season. (Four yards were inspected on February 22, 2012 or February 23, 2012.)
Danville	Did not inspect before the 2011 rainy season. (Inspected on June 14, 2012.)
Richmond	Did not inspect before the 2011 rainy season. (Three yards were inspected between April 27, 2012 and June 6, 2012.)
San Pablo	Did not inspect before the 2011 rainy season. (Inspected on "4/243/2012".)
Walnut Creek	Did not inspect before the 2011 rainy season. (Four yards were inspected between January 5, 2012 and May 11, 2012.)

San Mateo County

Permittee	***Violation***
Atherton	Did not inspect before the 2011 rainy season. (Both yards were inspected on December 6, 2011.)
Brisbane	Implementation of corrective actions was verified six months after problems were first discovered.
Daly City	Did not inspect before the 2011 rainy season. (Both yards were inspected in April 2012.)
Menlo Park	Did not inspect before the 2011 rainy season. (Inspected on November 22, 2011.)
San Bruno	Did not inspect before the 2011 rainy season. (Inspected in January 2012.) Thank you for acknowledging noncompliance in Annual Report and discussing the procedures already implemented to ensure future compliance.
San Mateo	Unclear when temporary corrective actions were implemented. Unclear when permanent corrective actions will be implemented.
South San Francisco	Did not inspect before the 2011 rainy season. (Inspected on March 19, 2012.) Thank you for acknowledging noncompliance in Annual Report and discussing the procedures already implemented to ensure future

Permittee	***Violation***
	compliance.

Santa Clara County

Permittee	***Violation***
Cupertino	Did not inspect before the 2011 rainy season. (First inspection was on January 9, 2012.)
Los Altos	Did not inspect before the 2011 rainy season. (Inspected on March 26, 2012.)
Los Altos Hills	Did not inspect before the 2011 rainy season. (Inspected on February 1, 2012.)
Milpitas	Did not inspect before the 2011 rainy season. (Inspected on January 12, 2012.)
Palo Alto	Did not inspect before the 2011 rainy season. (Three yards inspected between November 30, 2011 and February 29, 2012.)
Santa Clara	Did not inspect before the 2011 rainy season. (Three yards inspected between May 17, 2012 and June 7, 2012.)
Santa Clara County	County inspected all three yards a number of times but one yard did not get its first inspection until December 30, 2011. Unclear when corrective actions were implemented.

Solano County

Permittee	***Violation***
Suisun City	Did not inspect before the 2011 rainy season. (Inspected on December 30, 2011.)
Vallejo	Did not inspect the whole yard. Recorded an inspection when it cleaned, did installation, or did maintenance.

Required Response: Within 20 days of this letter, each of the above Permittees shall submit a response discussing (1) the Permittee's reason for failure to comply with Provision C.2.f., (2) whether or not the Permittee complied with Provision C.2.f. for the 2012-2012 reporting year, (3) a description and schedule of tasks necessary to achieve full compliance, and (4) an estimated date for achieving full compliance.

<u>Unclear Compliance with Provision C.2.f. – Corporation Yard</u>

The following Permittees' compliance with Provision C.2.f. – Corporation Yard is unclear:

Alameda County

Permittee	***Issue***
Albany, Berkeley, and Zone 7	Unclear when corrective actions were implemented.

Contra Costa County

Permittee	***Issue***
Concord	Unclear when corrective actions were implemented.
Hercules	Unclear if yard was inspected and SWPPP implemented.
Lafayette	Unclear when yard was inspected. No inspection date.
Pittsburg	No date for actual inspection. States "NA".

San Mateo County

Permittee	***Issue***
East Palo Alto	Unclear when corrective actions were implemented.
Brisbane	Unclear when corrective actions were implemented.
San Mateo	Unclear when temporary and permanent correct actions were implemented.

Santa Clara County

Permittee	***Issue***
Mountain View	Unclear if the City has coverage under the Industrial General Permit and therefore does not need to fill out the Annual Report for corporation yard. City did not check that its corporation yard has coverage under the Industrial General Permit. It did not fill out the inspection table in the Annual Report but included a copy of its NOI inspection report.
Santa Clara Valley Water District	Unclear when issues were first found and when corrective actions were implemented.

Required Response: Within 20 days of this letter, each of the above Permittees – whose compliance with Provision C.2.f. is unclear – shall submit a revision to its Annual Report to clarify its implementation of Provision C.2.f. during the 2011-2012 reporting year (Please note, revisions must include the certification statement and the pages that have been revised.).

Future Implementation of MRP and Reporting

1. Permittees must inspect their corporation yards before the start of the rainy season, foreseeably July-September. The corporation yards should ideally be inspected right before the start of the rainy season to ensure that the Stormwater Pollution Prevention Plans are implemented adequately.
2. Permittees shall record corporation yard inspection findings and follow-up actions accurately in the Annual Reports.
3. Permittees shall ensure that all required corrective actions are implemented in a timely manner.
4. Noncompliance with *any* provision of the MRP must be highlighted in the Annual Report, preferably in the cover letter, with the reason for failure to comply, a description and schedule of tasks necessary to achieve compliance, and an estimated date for achieving full compliance as required in Provision C.16.c. of the MRP.

Summary of Our Review of the 2012 Annual Report for Provision C.2.f. – Corporation Yard

Attachment A shows the details of our review of Provision C.2.f. – Corporation Yard.

Should you have question regarding this matter, please email Selina Louie, of my staff, at slouie@waterboards.ca.gov or call her at (510) 622-2383.

Sincerely,

Shin-Roei Lee
2013.01.08
12:26:44 -08'00'

Shin-Roei Lee, Chief
Watershed Management Division

Attachment A: Annual Report Review: Provision C.2.f. – Corporation Yard

Attachment A

Provision C.2. - Corporation Yards, Alameda County

Provision C.2.f.	Alameda County	Alameda	Albany	Berkeley	Dublin	Emeryville	Fremont	Hayward	Livermore
Number of corporations yards.	1	3	1	1	1	1	3	1	1
Number of inspections.	2	3	1	1	1	1	3	1	1
Issues?	N	Y	Y	N	N	N	Y	Y	N
Types of violations and corrective actions implemented.		One site needed sweeping in the dumpster area and clean up of two spots of leaked vehicle oil. Another site had a number of housekeeping issues.	No sd nearby. Waste bin needs to be covered and aspahlt base need to be moved under cover.	Required weekly sweeping and regular maintainance of catch basin inserts.			Minor issues at all three site. Central Park Service Center has no storm drains.		
In Compliance?	Yes	Yes. The City confirmed implementation of corrective actions within 10 business days. Dates were reported.	Unclear when follow up was done.	Unclear how they were going to determine if the required actions were done.	Yes	Yes	Yes. Stated that all follow actions completed.	Yes	No. Inspected 6/28/12. MRP requires at least one inspection before the rainy season.

Provision C.2. - Corporation Yards, Alameda County

Provision C.2.f.	Newark	Oakland	Piedmont	Pleasanton	San Leandro	Union City	Alameda County Flood	Zone 7
Number of corporations yards.	1	3	1	1	1	1	1	1
Number of inspections.	2	3	2	1	4	4	2	1
Issues?	N	Y	N	Y	Y	Y	N	Y
Types of violations and corrective actions implemented.		Housekeeping. Unclear when corrective actions were implemented.		Housekeeping, erosion control, leaking oil, and oil spots.	Non stormwater discharge, housekeeping, sediment build up.	Trash and stockpile of soil located 50' from storm drain in drainage ditch.		BMPs, such as sandbags and wattles, needed maintenance. Drain needed to be cleaned and bare slopes needed vegetation.
In Compliance?	Yes. Board staff inspected Spring 2011. Issued findings and required actions, which the City have implemented.	No. Not inspected before the rainy season. All three yards inspection June 2012. Unclear when corrective actions were implemented.	Yes	No. Not inspected before the rainy season. Inspected 6/12/12. Excellent discussion of findings. Divided findings by location in the corp yard. Unclear when corrective actions were implemented.	Yes, the yard was inspected three times during the rainy season. While implementation dates for the corrective actions are unclear, discussions indicate they were corrected.	No. Not inspected before the rainy season. Inspected 3/19/12. 3/26/12, 4/11/12, 6/5/12. Found stockpile 3/19/12. Pile was not moved until three inspections later, 6/5/12. Took two inspections to get trash picked up and 3 inspections to get lids to garbage cans ordered.	Yes	Unclear when corrective actions were implemented.

Provision C.2. - Corporation Yard, Contra Costa County

Provision C.2.f.	Clayton	Concord	Contra Costa County	Danville	El Cerrito	Hercules	Lafayette	Martinez
Number of corporations yards.	1	1	4	1	1	1	2	1
Number of inspections.	1	1	4	1	1	1	2	1
Issues?	Y	Y	N	Y	N	N	N	N
Types of violations and corrective actions implemented.	Minor housekeeping issues such as recovering stockpiles and removing used vehicles. Vehicles not leaking.	Minor housekeeping issues such as empty bottle of oil left outdoors and pail of tar left outdoors.		Minor wattle maintenance issues that will be replaced before the fall.				
In Compliance?	No. Inspected 2/23/11. MRP requires at least one inspection before the rainy season.	Compliance unclear Divided each finding so follow-up actions clear. Empty bottle and pail of tar were moved immediately but unclear when pails and drums next to paint booth were covered or placed in secondary containment.	No. Inspected on 2/22 or 2/23.	No.Inspected on 6/14/12. Should have been inspected in Fall 2011. Inspection unannounced. Yard re-certified as a Bay Area Grean Business.	Yes	Compliance unclear . "All corporation yard water is pumped into a sedimentation basin." Not all pollutants settle and unclear when basins are cleaned.	Unclear No dates for the actual inspections.	Yes

Provision C.2. - Corporation Yard, Contra Costa County

Provision C.2.f.	Moraga	Orinda	Pinole	Pittsburg	Pleasant Hill	Richmond	San Pablo	San Ramon	Walnut Creek	CCCFC& WCD
Number of corporations yards.	1	1	1	1	1	3	1	2	4	0
Number of inspections.	1	1	NA	0	1	5	1	2	4	
Issues?	N	N			N	Y	Y	N	Y	
Types of violations and corrective actions implemented.						Drums and materials not covered or in double containment. Some materials stored uncovered over storm drain.	Filter fabric at Dis needed replacement and was completed during the inspection.		Minor signage issues. Structrual covers for fueling station and outdoor life included in the long-term improvement plan for Golf Course.	
In Compliance?	Yes	Yes	Corp Yard covered under the General Industrial Permit.	Unclear. States, "City Public Works staff self inspect the Corporation Yard." No inspection date or data. States "NA".	Yes	No. First inspections 4/27/12, 6/4/12, and 6/6/12. Should have been inspected in the Fall.	No. Inspected 4/"243"/12. Should have been inspected in the Fall.	Yes	No. Very detailed findings and follow-up actions but inspections were conducted 1/5/12, 3/22/12, and 5/11/12.	

Provision C.2. - Corporation Yard, San Mateo County

Provision C.2.f.	Atherton	Belmont	Brisbane	Burlingame	Colma	Daly City	E Palo Alto	Foster City	Half Moon Bay	Hillsborough	Menlo Park	Millbrae	Pacifica
Number of corporations yards.	2	1	1	1	1	2	1	1	1	1	1	1	1
Number of inspections.	2	2	2	1	1	2	2		1	12	1	1	1
Issues?	Y	N	Y	N	N	N	Y		N	Y	N	Y	N
Types of violations and corrective actions implemented.	Watkins yard had a leak in plumbing from well. Stated repairs made.		Minor issues such as more sweeping, drip pan to capture leaks, and signage.				Cover stored materials (Corrected during inspection), reduce size of stockpiles (Unclear when corrected).			Cleaned, repaired, and orgained areas accordingly during inspections.		Minor signage. Unclear when corrective actions implemented.	
In Compliance?	No. Both inspections done 12/6/11.	Yes. One inspection in October and the 2nd inspection in June.	No. Reinspection 6 months later. Issues resolved. This is not timely implementation of corrective actions.	Yes	Yes	No. Both inspections done in April.	Unclear when some corrective actions were implemented.	Has an NOI.	Yes	Yes	No. Inspected November 22nd.	No. Inspected May 23, 2012.	Y

Provision C.2. - Corporation Yard, San Mateo County

Provision C.2.f.	Portola Valley	Redwood City	San Bruno	San Carlos	San Mateo County	San Mateo	S San Francisco	Woodside	SM County Flood Control
Number of corporations yards.	1	1	2	1	9	1	1	1	0
Number of inspections.	2	1	2	0	9	1	1	2	
Issues?	N	N	Y		Y	Y	N	N	
Types of violations and corrective actions implemented.			Tasked specific staff at Public Services Corp Yard to sweep daily, inspect areas for chemical and hazardous waste material, and colled and store any found chemicals and hazardous materials appropriately. Parks & Rec Corp Yard had floor drain in shed plugged the day after inspection and signage replaced January 15, 2012.		Minor issues such as missing dumpster lids, and spill kits; and need for larger hazardous waste locker. Secuing funding to purchase.	Improvements needed in the solid waste transfer station. Capital improvement planning underway. No date for permanent corrective action. Unclear if temporary corrective actions implemented.			
In Compliance?	Yes. Trap in catch basin to catch pollutants.	Yes. Included inspection form.	Inspected this Corp Yard in January because manager responsible for inspection was on leave. City is not in compliance but has implemented corrective actions. Storm drains in Public Service Corp Yard all plumbed to sanitary sewer. The City has a back up manager for task now. Excellent report and explanations.	Has an NOI.	No. Inspections done February - May. Don't see issues as violations.	No	City is not in compliance but has implemented corrective actions. Inspected 3/19/12. States that is will be inspected before October 1, 2012. Realizes oversight.	Yes. Inspected 10/20/11 and 4/17/12.	Uses SM County DPW's Road crew for routine maintenance activities.

Provision C.2. - Corporation Yard, Santa Clara County

Provision C.2.f.	Campbell	Cupertino	Los Altos	Los Altos Hills	Los Gatos	Milpitas	Monte Sereno	Mountain View	Palo Alto
Number of corporations yards.	1	1	1	1	1	1	0	1	1
Number of inspections.	1	4	1	1	1	2			3 whole yard and 2 just auto maintenance
Issues?	N	Y	N	N	N	Y			Y
Types of violations and corrective actions implemented.		Inspection findings and follow-up actions are repetitive and confusing. Can't tell when issues were first identified. Inspected 1/9/12, 3/29/12, 6/19/12, and 7/17/12. Consider 7/17 its annual inspection but July is part of the 2012-2013 reporting year.	Inspected 3/26/12.	Inspected 2/1/12.		Inadequate secondary containment, catch basin needed cleaning and labeling. Inspected 1/12/12 and reinspected 5/2/12. At 5/2/12 inspection, has yet to improve inspections to look for liquid in the containment structure.			Housekeeping and blocked pipe near outfall. Corrective actions either immediately or within 10 business days.
In Compliance?	Yes	No. Not inspected before rainy season.	No. Not inspected before rainy season.	No. Not inspected before rainy season.	Y	No. Not inspected before rainy season. Too long to implement corrective actions.		Unclear. Did not check that it has an NOI; did not fill out table; but included a copy of its NOI inspection report.	No. Not inspected before rainy season. Whole yard inspections 11/30/11, 1/3/12, and 2/29/12. Clean Bay for auto 11/7/11 and 5/30/12.

Provision C.2. - Corporation Yard, Santa Clara County

Provision C.2.f.	San Jose	Santa Clara	Santa Clara County	Saratoga	Sunnyvale	SCVWD
Number of corporations yards.	6	3	3	1	1	3
Number of inspections.	5	3	22	1	1	4 inspections just at one yard.
Issues?	Y	Y	Y	N	Y	Y
Types of violations and corrective actions implemented.	Minor housekeeping issues such as uncovered bins, and spillage of materials, unlabled containers. Noted implementation of corrective actions but not clear when they were implemented.	Engine stored outside uncovered and drip pans not placed under wrecked cars in Street Corp Yard on 5/17/12. Violations corrected by 5/31/12 reinspection. Water Sewer Yard and Parks Service Yard inspected 6/7/12.	Sprinkler heads need adjustment, and oil stains.		Potential discharges identified; required clean out of 1 inlet, improvement of housekeeping, use of dry clean-up methods, and training. Corrective actions implemented but not sure when. Some temporary BMPs implemented pending long term solutions.	Sheen in discharge; discharge muddy, turbid.
In Compliance?	Yes. 1 yard has NOI coverage.	No. Not inspected before rainy season. One yard was inspected 5/17/12 and the other two yards were inspected 6/7/12.	No. All three sites inspected a number of times. West Yard's first inspection 12/28/11. 9 inspections for Fleet Services but no dates.	Yes	Yes Not clear when corrective actions were implemented but report states, "Issues were corrected in a timely manner."	Unclear. Two yards not in use during the rainy season. Comments state that both were inspected before the rainy season but there is no inspection information for either yards. Inspections all listed together so unclear when the issues were cited and when they were corrected.

Provision C.2. - Corporation Yard, Solano County

Provision C.2.f.	Fairfield	Suisun City	Vallejo	Vallejo San & Fld Control District
Number of corporations yards.		1	1	1
Number of inspections.		1	Maybe 4	1
Issues?		Y	Unclear	N
Types of violations and corrective actions implemented.		Stock larger amount of absorbent in spill kit.		
In Compliance?	Has coverage under the Industrial General Permit.	No. Inspected 12/30/11. Unclear when follow-action took place.	Unclear. Seems like the City recorded an inspection when it cleaned, installed, or maintained something. Don't know if the whole yard was ever inspected.	Yes

Attachment 1

Provision C.3. File Review

Documents	Belmont Terrace	CA Shakespeare Theater	El Rincon
Initial SWCP, including engineering drawings	There are a number of SWCPs with drawings but unclear which SWCP was the initial plan.	There are a number of SWCPs with drawings but unclear which SWCP was the initial plan.	There are a number of SWCPs with drawings but unclear which SWCP was the initial plan.
Correspondence between County staff and project proponent regarding the revisions to the SWCP	Yes	Yes	Yes
Revisions to the SWCP based on County staff comments	Yes	Yes	Yes
Final SWCP, including engineering drawings	Dated May 24, 2011.	Dated December 2, 2009.	Dated May 26, 2010 but no engineering drawings.
Signed or adopted Conditions of Approval	Approved December 5, 2005 by Zoning Administrator.	Approved June 15, 2009 by Zoning Administrator.	Couldn't find a copy in the files.
Record of annexation into the Community Facilities District	Couldn't find a copy in the files.	Couldn't find a copy in the files.	Couldn't find a copy in the files.
Executed Operation and Maintenance Agreement, including maps showing location of treatment units	Couldn't find a copy in the files.	O&M Agreement was approved by the Board of Supervisors on March 15, 2011. It does not include maps. No requirement to document inspection findings.	O&M Agreement is dated June 2, 2010. Treatment units difficult to delineate on map.
45-day inspection of newly installed stormwater treatment systems	Most likely installed before December 1, 2010.	Installed before December 1, 2010 but the County conducted this inspection on August 4, 2010.	Couldn't find a copy in the files. But the tabular format shows that this inspection was conducted on February 22, 2012.
Engineering drawings showing that all run off will be treated appropriately	11x17 drawings seem to show that some run off towards the bottom of the street on both Falling Star Drive and Little Valley Drive does not get treated. Mr. Swartz confirmed this observation.	11x17 drawings seem to show that all run off will be treated.	Yes
Calculations showing that the treatment systems are sized adequately	Yes	Yes	Yes
Engineering drawings showing that the treatment systems are designed adequately	Couldn't find a copy in the files.	Couldn't find a copy in the files.	Okay but need to build under drains that are at least two-thirds the width of the bottom of the bioretention unit to prevent clogging and to allow more time for infiltration.

UNITED STATES ENVIRONMENTAL PROTECTION AGENCY
REGION IX
75 Hawthorne Street
San Francisco, CA 94105

November 30, 2010

Donna Clark
Counsel
California Department of Transportation
Legal Division
1120 N Street, Mail Stop 57
Sacramento, CA 95814

Re: Findings of Violation and Order for Compliance
EPA Docket No. CWA-09-2011-0001

Dear Ms. Clark:

As promised during our conference call on November 22, 2010, this letter confirms our discussions regarding the above Administrative Order, including provisions III.A.1-3, which require a response no later than December 31, 2010.

Administrative Order Provision III.A.1

EPA confirmed that Caltrans is required to submit compliance certifications by December 31, 2010 for each of the 52 sites visited during the EPA audit (identified on Table 1 of the Audit Report) and the two maintenance facilities cited on page 19 of the Audit Report (the District 3 Equipment Shop No. 23110 and the District 1 Equipment Shop No. 21110). Additionally, if Caltrans determines that Facility Pollution Prevention Plans (FPPPs) are required, but have not been developed and/or implemented, for the District 3 Sacramento Equipment Sale Yard and the District 3 Equipment Shop (also identified on page 19 of the Audit Report), Caltrans must submit compliance certifications for those facilities as well.

Administrative Order Provision III.A.2

Caltrans representatives indicated they may need additional time (beyond the December 31st deadline) to investigate, take appropriate actions, and complete compliance certifications for all of the permanent and temporary sweeper and roadway waste and vactor decant storage or disposal locations statewide. EPA agreed that Caltrans may submit by December 31, 2010 the compliance certifications it has completed by that date, along with its plan and schedule for completing the compliance certifications for all remaining locations. EPA requests that Caltrans prioritize its waste storage and/or disposal site upgrades or closure activities based on an assessment of each site's relative threat to water quality (based on the Risk Determination

Methodology contained in the newly effective State Construction General Permit or an assessment of whether the site discharges to a water body listed as impaired on the current CWA 303(d) list (http://www.epa.gov/region9/water/tmdl/california.html)).

Administrative Order Provision III.A.3

Caltrans explained that, as provided in the referenced March 9, 2010 Memorandum, the revised storm water training program will not be fully completed until March 1, 2011. Given that schedule, EPA agreed that Caltrans may submit by December 31, 2010 documentation on: (1) the percentage of employees who have completed the refresher training by that date; and (2) the names of the contractors who have completed the best management practices training by that date. By March 31, 2011, Caltrans must provide EPA with the complete compliance certification and documentation required by Administrative Order Provision III.A.3.

Other Matters

Caltrans representatives also indicated that Regional Water Quality Control Boards (RWQCBs) may be providing Caltrans District staff with conflicting information about the Administrative Order. EPA agreed to contact the State and Regional water boards to confirm that questions concerning the Administrative Order must be referred to EPA, not the RWQCBs.

Caltrans also expressed concern about coordinating the revisions to its Storm Water Management Plan required by the Administrative Order, the newly adopted State Construction General Permit, and eventually, its revised storm water permit. Although EPA expects such required revisions would likely work in concert, to the extent potential conflicts may arise, EPA is willing to work with Caltrans and the State and Regional water boards to address such conflicts.

Please call me if you have any questions.

Sincerely,

Gretchen Busterud
Office of Regional Counsel

UNITED STATES ENVIRONMENTAL PROTECTION AGENCY
REGION IX
75 Hawthorne Street
San Francisco, CA 94105-3901

G. Scott McGowen
Chief Environmental Engineer
California Department of Transportation
P.O. Box 942873
Sacramento, CA 94273-0001

Re: Termination of Administrative Order for Compliance
(EPA Docket No. CWA-09-2011-0001)

Dear Mr. McGowen:

The purpose of this letter is to terminate the October 26, 2010 Findings of Violation and Order for Compliance (Order) that the Environmental Protection Agency, Region 9 (EPA) issued to the California Department of Transportation (Caltrans) pursuant to sections 308(a) and 309(a) of the Clean Water Act (Act), 33 U.S.C. §§ 1318(a) and 1319(a).

The Order required Caltrans to correct all deficiencies identified in EPA's audit report at each of the inspected construction and maintenance locations, implement storm water refresher training for all construction field staff, and revise its statewide Storm Water Management Plan (SWMP) to return to compliance with the Act and the requirements of California's Statewide Storm Water Permit and Waste Discharge Requirements for the State of California Department of Transportation (Order No 99-06-DWQ).

Caltrans has submitted information that supports EPA's decision to terminate the Order, including: a compliance certification for all audited construction sites, excluding the Buckhorn Summit site that requires ongoing coordination between Caltrans District 2 and the Central Valley Regional Water Quality Control Board; compliance certifications from each of Caltrans twelve Deputy District Directors for Maintenance specific to all permanent and temporary roadway sweeper and vactor waste storage and disposal sites; a summary of completed storm water refresher training held for Caltrans construction field staff; and a revised SWMP, dated March 2012, addressing required changes to Caltrans program management structure, inspection and enforcement programs, and construction and maintenance management programs.

Termination of this Order in no way relieves Caltrans of the obligation to comply with the Act, Caltrans Statewide Storm Water Permit, and all applicable statutes and regulations. It is EPA's understanding that all revisions incorporated into Caltrans March 2012 revised SWMP in response to EPA's Order will be included in all future SWMP revisions. As such, EPA intends to coordinate closely with the State Water Resources Control Board to facilitate its review and approval of Caltrans subsequent SWMP revisions required by Caltrans reissued Statewide Storm Water Permit (Order No. 2012-0011-DWQ, effective July 1, 2013).

Printed on Recycled Paper

EPA reserves all of its authorities, both legal and equitable, under the Act and any other statutory, regulatory, or common law authorities of the United States, including, specifically, the right to seek civil judicial penalties and injunctive relief under section 309 of the Act, 33 U.S.C. § 1319.

If you have any questions related to this termination letter or the above referenced enforcement action, please contact Greg Gholson at (415) 947-4209 or via email at gholson.greg@epa.gov. Legal questions may be directed to Alexa Engelman in our Office of Regional Counsel at (415) 972-3884 or via email at engelman.alexa@epa.gov.

Sincerely,

Kathleen H. Johnson, Director
Enforcement Division

cc: Walt Shannon, SWRCB
Leo Sarmiento, SWRCB
Executive Officers, RWQCBs

UNITED STATES ENVIRONMENTAL PROTECTION AGENCY
REGION IX
75 Hawthorne Street
San Francisco, CA 94105-3901

DEC 2 - 2011

Sent Via Certified Mail
7008 1830 0002 6279 7220
Return Receipt Requested

Mr. Scott McGowan
Chief Environmental Engineer
Division of Environmental Analysis
California Department of Transportation
P.O. Box 942873
Sacramento, CA 94273-6608

Subject: Comments on Caltrans' Revised Storm Water Management Plan

Dear Mr. McGowan:

Enclosed please find the U.S. Environmental Protection Agency's (EPA) comments on Caltrans' revised Storm Water Management Plan (SWMP or Plan) submitted to EPA on March 31, 2011 in response to EPA's Findings of Violation and Order for Compliance (EPA Docket No. CWA-09-2011-0001), Section III.B.4.

I recognize the challenge Caltrans faces to ensure the SWMP accurately reflects all of the requirements of our Order, the Permit and the state's storm water construction general permit (CGP). Notwithstanding these challenges, the SWMP Caltrans submitted fails to adequately address several important requirements of EPA's Order and, therefore, is not approved. The following themes were identified during our review that must be addressed prior to any subsequent submittals for EPA consideration:

- The majority of the program enhancements required by EPA's Order were only briefly discussed within the revised SWMP with critical details deferred to guidance documents under development or requiring extensive updates.

- Lack of specificity with regards to required changes affecting Caltrans inspection and enforcement programs limit the usefulness of the SWMP as a tool for resident engineers to pursue enforcement against construction contractors for non-compliance with the CGP.

In response to our comments today, Caltrans is now required to make further revisions to its SWMP and submit a revised SWMP to EPA for review within 30 days of receiving our comments. Given the timing of our comments, we recognize the need to adjust the date for full implementation of the Plan beyond December 31, 2011 and my staff is available to discuss such timing with your staff at their convenience.

Printed on Recycled Paper

If you have concerns of questions, please call me at (415) 972-3572, or refer staff to Greg Gholson at (415) 947-4209 or via email at gholson.greg@epa.gov. For legal questions, please contact Gretchen Busterud in our Office of Regional Counsel at (415) 972-3903, her email is busterud.gretchen@epa.gov.

Sincerely yours,

David Wampler, Team Leader
CWA Compliance Office

Enclosure

cc (w/encl):
Julie Macedo, SWRCB
Leo Sarmiento, SWRCB

EPA Comments on Caltrans' March 2011 Revised Storm Water Management Plan, Submitted in Response to EPA's Findings of Violation and Order for Compliance (EPA Docket No. CWA-09-2011-0001)

1. Program Management

a. Compliance Accountability

Section III.B.7 of EPA's Order required revisions to Caltrans' program management structure within its SWMP to demonstrate how it will ensure consistent implementation of its storm water management program and accountability of resident engineers and maintenance supervisors for compliance with its statewide Storm Water Permit (Permit) and the Construction General Permit (CGP). In response, Caltrans established a senior level working group (Water Quality Management Assurance Team or WQMAT) chaired by its Senior Environmental Engineer with representation from each of its Headquarters and District Divisions (i.e. construction, design, and maintenance). Although the WQMAT provides a necessary forum for direct communication on storm water management policies and procedures, Caltrans revised SWMP fails to demonstrate how the Department will hold its resident engineers and maintenance supervisors accountable for Permit and CGP non-compliance at construction sites and maintenance facilities, respectively. Caltrans must amend its revised SWMP to provide that demonstration, which may include, for example, specific escalating disciplinary actions for resident engineers or maintenance supervisors for significant or repeated non-compliance, the inclusion of storm water compliance in annual or personnel performance reviews, or other appropriate personnel policies to ensure accountability. EPA believes such internal policies need to be explicitly described in the SWMP and implemented to ensure accountability for thorough and consistent implementation of the SWMP.

b. Employee Training

Section III.B.8 of EPA's Order required enhanced storm water training for employees. In response, Caltrans proposed the development of a Master Training Plan (MTP) to be incorporated into each of its twelve district work plans. This proposed approach lacks specificity with regards to required employee training frequencies and on-the-job training requirements that were provided in prior approved SWMPs. At a minimum, Caltrans' revised SWMP must identify: the target audience for basic and advanced storm water training courses; required employee training frequencies (e.g. basic training within first year of employment and refresher or advanced training no less frequent than once every four years); and core components of a robust on-the-job training program (i.e. training topics, number of hours, and method by which the training will be evaluated). Deferral of specific implementation plans to a future MTP fails to demonstrate how, in this SWMP, Caltrans will ensure all employees are effectively trained on all storm water requirements, including the proper selection, installation, and maintenance of Best Management Practices (BMPs).

c. Contractor training

Section III.B.8 of EPA's Order required enhanced storm water training for contractors. In

response, Caltrans proposed a series of voluntary information exchange sessions to raise contractors' awareness of Caltrans' storm water procedures for complying with the Permit and the CGP. EPA requests Caltrans amend Section 6.3 of its revised SWMP to include a schedule for required Caltrans and contractor pre-bid meetings, pre-construction meetings, and on-the-job training sessions conducted by the resident engineer to address site-specific storm water requirements. The frequency of on-site training sessions should be based on relevant factors such as a site's relative risk to water quality or the contractors' history of compliance with CGP and Permit requirements, rather than project duration. To demonstrate the completion of this training, Caltrans must retain the contractor training recordkeeping requirements from its 2003 SWMP, whereby a summary of contractor training accomplishments, including the date and location of all contractor training sessions, attendance records, and course agendas are provided to the State Board as part of its Annual Report. As currently drafted, Section 6.3 of the revised SWMP fails to set forth a specific framework to ensure that Caltrans construction contractors are effectively trained on the storm water requirements at their field locations.

2. Inspection and Enforcement Program

a. Tracking Compliance

Section III.B.9(a) of EPA's Order directed Caltrans to track dates and locations of required storm water inspections for Construction Activities, Maintenance Activities, and Maintenance Facilities; inspection findings; correction of deficiencies; and resolution of concerns through, among other approaches, follow-up inspections and appropriate enforcement response. Caltrans' revised SWMP fails to include a comprehensive system to track the dates and locations of construction site storm water inspections, inspection findings and resolution of deficiencies. Caltrans must amend Section 8 of its revised SWMP to fully describe the database that will be used to track all construction site inspections performed as required by the Permit and CGP. Additionally, Caltrans must define, within the SWMP, all distinctions (i.e. "minor," "major" and "critical" deficiencies) it uses for directing response actions (See Figure 8-1, draft 2011 SWMP). Any and all compliance deficiencies with the Permit and CGP must be timely addressed and tracked to comply with the Order.

In response to Section III.B.9(a) of EPA Order, Caltrans' revised SWMP references a Maintenance Compliance Evaluation Plan (MCEP), which is not included in the draft SWMP. To comply with the Order, the SWMP itself, rather than a separate plan, must include a comprehensive description of how Caltrans will track maintenance inspections and inspection findings, correct deficiencies and manage subsequent follow-up actions. Caltrans' revisions to Section 8.4.2 and Figure 8-2 describe different response actions for major and critical deficiencies as compared to minor deficiencies or incomplete compliance. As discussed above, those distinctions must be defined and all non-compliance with Permit requirements and the CGP must be addressed and tracked to comply with the Order.

b. Construction & Maintenance Inventory

EPA's Order Section III.B.9(b) required Caltrans to develop a comprehensive inventory of all current construction sites with specific reporting requirements, including at least quarterly

updates. In its revised SWMP, Caltrans proposed to develop a comprehensive inventory of all construction activities as part of its Year-End Summary Performance Report. Caltrans must amend its revised SWMP to include a schedule for posting quarterly updates to this construction inventory on its website, independent of its Year-End Summary Performance Report.

Section 5.6 of Caltrans revised SWMP commits the Department to develop a comprehensive inventory of all permanent and temporary maintenance facilities and all locations where treatment BMPs have been installed to address Order requirement III.B.9(c). Caltrans must amend its revised SWMP to include a schedule for posting at least bi-annual updates to this maintenance facility and treatment BMP inventory on its website.

c. Oversight Inspection Program

Section III.B.9(e) of EPA's Order requires Caltrans to develop an oversight inspection program, including detailed protocols and standards. To address Order requirement III.B.9(e), Caltrans proposed minor changes to its Annual Construction Compliance Review Plan (ACCRP) and Annual Maintenance Compliance Review Plan (AMCRP), described within Sections 8.4.1.1 and 8.4.2.1 of its revised SWMP, respectively. The revised SWMP directs the Construction and Maintenance Division staff to prepare annual compliance review plans each August to identify projects and facilities to be inspected the following year. The deferral of construction site and maintenance facility inspection selection criteria to the ACCRP and AMCRP fails to demonstrate how, in this SWMP, Caltrans will ensure all construction sites and maintenance facilities that pose a significant risk to water quality will be identified for inclusion in its oversight inspection program. EPA is also concerned that the proposed annual review approach does not provide adequate flexibility to address unanticipated threats to water quality that develop during the year from Department activities and does not provide for impartiality in the prioritizing of inspections by staff from the respective departments. Finally, Sections 8.4.1.1 and 8.4.2.1 of the revised SWMP use the term "watershed," while Section III.B.9(e)(i) of the Order requires evaluation of relative risk to 303(d) listed "water bodies." Caltrans must amend the revised SWMP to include the detailed oversight inspection program required under the Order.

d. Enforcement Response Program

Section III.B.9(f) of EPA's Order requires Caltrans to establish a range of escalating enforcement responses to address deficiencies, including clear guidelines for selection of the appropriate enforcement response and the use of different enforcement tools to ensure compliance. Caltrans revised SWMP fails to include a progressive enforcement response policy to address Permit non-compliance identified through its oversight inspection program or other means at Construction Activities and Maintenance Facilities as required by EPA's Order. While Section 4.2 of the document lists the primary tools available to resident engineers to enforce the construction storm water regulations (i.e. withholding of payment, removal of contractor, suspension of work) and Section 8.4 provides reporting protocols and re-inspection requirements for job site non-compliance, neither section adequately identifies the conditions (e.g. egregious or repeat violations, recalcitrant contractors) that warrant imposition of Caltrans' contractual enforcement tools. The limited discussion of enforcement protocols within Caltrans' revised SWMP indicates that only "major" and "critical" deficiencies will be addressed. This is contrary

to the Order requirements to address all deficiencies in Caltrans Construction Activities, Maintenance Activities, and Maintenance Facilities through established enforcement procedures. Caltrans revised SWMP references the Division of Construction Storm Water Management Enforcement Guidance Manual (Enforcement Manual) for details on the appropriate use of these tools. Deferral of enforcement protocols to the Enforcement Manual fails to demonstrate how, in this SWMP, Caltrans will implement its construction site enforcement program. Preliminary review of the Enforcement Manual, which was not submitted with the revised SWMP but was found on Caltrans' website, reveals that there is an insufficient level of detail as to the specific types of Permit non-compliance that warrant application of each of the progressive contractual enforcement tools. Additionally, the Enforcement Manual has not been updated to reflect regulatory changes that impact how the Department will implement a year-round program independent of previously defined rainy season compliance requirements.

Similarly, Section 8.4.2.3 of Caltrans revised SWMP indicates that details of a progressive enforcement response scheme to address Permit non-compliance at maintenance facilities and activities will be included in its MCEP. Deferral of enforcement protocols to its yet to be developed MCEP fails to demonstrate how, within this SWMP, Caltrans will implement its maintenance facility and activity enforcement program with clear guidelines for appropriate enforcement responses in accordance with EPA's Order.

3. Construction Management Program

Section III.B.11 of EPA's Order required Caltrans to revise its SWMP to reflect recent enhancements to its construction storm water training program and provide a schedule for routine construction storm water training sessions. To address Order requirement III.B.11, Section 4.2.2 of Caltrans' revised SWMP states that the "Construction Deputy Directors (or Regional Managers) are responsible for ensuring the training program is implemented (per Section 6 of this SWMP)." Section 6 of the revised SWMP states that the "Master Training Plan will be developed by the Caltrans Division of Environmental Analysis and incorporated into the District Work Plans." Again, deferral of the training program and schedule to a yet undeveloped plan is inconsistent with the Order and the proposed approach appears unnecessarily complex. Caltrans must amend its revised SWMP to incorporate all elements of its MTP.

4. Maintenance Management Program

Section III.B.12 of EPA's Order required Caltrans to revise the maintenance section of its SWMP to ensure that Facility Pollution Prevention Plans (FPPPS) are prepared and fully implemented at all Maintenance Facilities. In response, Caltrans revised Section 5.6 of its SWMP to state that FPPPs "will be developed for each subject maintenance facility owned or operated by Caltrans." Development and implementation of site-specific FPPPs for all maintenance facilities has been a Permit requirement since July 1999. Caltrans must amend its revised SWMP to clearly state that FPPP have been developed for all maintenance facilities or provide EPA with a comprehensive list of maintenance facilities lacking FPPPs along with a timetable for the development of FPPPS for all maintenance facilities currently out of compliance with this requirement.

Section III.B.13 of EPA's Order required Caltrans revise the IC/ID component of its SWMP to ensure prompt and thorough identification, investigation, reporting, and response to all IC/IDs through a system to receive and track complaints and training on IC/ID management for maintenance personnel. To address this requirement, Caltrans' revised SWMP states that "Caltrans will develop and implement an IC/ID Notification and Response Plan (NRP) that describes the protocols used by the public and Caltrans staff to notify District Maintenance staff of an illicit connection/illegal discharge, and the procedures employed by District Maintenance staff to investigate and resolve reports of IC/IDs." Development and implementation of a comprehensive IC/ID program has been a Permit requirement since July 1999. Caltrans must amend its revised SWMP to incorporate all elements of its NRP to be in compliance with the Permit and EPA's Order.

Section III.B.14 of EPA's Order required Caltrans to develop a comprehensive storm drain system inventory. In response, Section 5.3.2.1 of Caltrans revised SWMP states that Caltrans "will develop and maintain a Storm Drain System Inventory." Section 5.2 of Caltrans revised SWMP indicates that the storm drain system inventory will be tracked as one element of its MCEP. Caltrans must fully describe all elements of its storm drain system inventory, including all data tracking components, within the revised SWMP. Caltrans must also include a timeline for completing the development of the inventory and associated database and how Caltrans will maintain the inventory and database.

Section III.B.15 of EPA's Order required Caltrans to develop a maintenance schedule for storm drain inlets that pose a significant threat to water quality based on, among other factors, the CWA 303(d) list of impaired water bodies for pollutants likely to be discharged from Caltrans facilities and rights-of-way, applicable Total Maximum Daily Loads (TMDLs), and known "hot spot" areas for pollutant accumulation as identified by Maintenance personnel, complainants, and others. Caltrans revised SWMP does not include a schedule for cleaning storm drain inlets that pose a significant threat to water quality as mandated by EPA's Order and Caltrans' Permit. Rather, Caltrans revised SWMP includes criteria that will be used to prioritize storm drain inlet cleaning once a schedule has been developed. Caltrans must amend its revised SWMP to include the maintenance schedule for storm drain inlet cleaning, including the specific frequency with which differently classified storm drain inlets are cleaned and presenting a clear plan to integrate the data required to prioritize storm drain cleaning (for example "hot spot" identification or proximity to a CWA 303(d) listed impaired water body).

Section III.B.17 of EPA's Order required Caltrans to develop and implement a Municipal Coordination Plan for coordinating its storm water management activities with other MS4 storm water management programs as required under Permit Provision G.1.b. Section 2.3 of Caltrans' revised SWMP indicates that coordination with municipalities on storm water matters is the responsibility of its District Directors. Caltrans' SWMP further states in Section 2.6 of the SWMP that district-level coordination activities are described in its district work plans. Section 2.6 lacks any discussion of district work plans and fails to provide any additional clarification as to routine or case-by-case Caltrans/municipal storm water management coordination. Caltrans must amend its revised SWMP to clearly explain how its District Directors will implement the Department's existing municipal coordination policies.

Contra Costa County
Public Works
Department

Julia R. Bueren, Director
Deputy Directors
R. Mitch Avalon
Brian M. Balbas
Stephen Kowalewski
Stephen Silveira

January 28, 2013

Shin-Roei Lee
Chief, Watershed Management Division
San Francisco Bay Regional Water Quality Control Board
1515 Clay St., Suite 1400
Oakland, CA 94612

Dear Ms. Lee:

This letter provides Contra Costa County's response to the January 8, 2013 Notice of Deficiency pursuant to Provision C.2.f ii (2) of the Municipal Regional Permit (MRP), Permit #R2-2009-0074. The County is committed to reducing and/or eliminating pollutants flowing into the storm drain network, local streams, the Delta, and the San Francisco Bay. The County acknowledges that it failed to formally inspect the County's four corporation yards prior to the "start of the rainy season." The formal, regulatory compliance inspection of the four corporation yards is conducted by staff from the Health Services Department (HSD), Hazardous Materials Division. Staff from the County Watershed Program failed to communicate to staff at HSD the requirement to inspect the four corporation yards "prior to the rainy season." Rather, HSD staff inspects these facilities during the rainy season to better gauge the effectiveness of the variety of Best Management Practices (BMPs) implemented at each facility. The County will cease conducting these compliance inspections during the rainy season and will conduct them prior to the onset of the rainy season (July – September) beginning in Permit Year 2013-14.

Please be advised that staff from the Public Works Department, Maintenance Division and Fleet Services Division conduct routine inspections of the corporation yards on a weekly basis for active Corporation Yards (two in Martinez and one in Brentwood) and monthly inspections of the closed corporation yard in Richmond. However, the Maintenance staff does not fill out formal paperwork to document these inspections. Maintenance Division staff will continue to conduct regular inspections of the corporation yards. Public Works Department staff will also discuss whether formal documentation of the routine corporation yard inspections should be implemented.

Please feel free to contact me via e-mail at csell@pw.cccounty.us or by telephone at (925) 313-2296 if you have any questions regarding this Notice of Deficiency or the County's response to it.

Sincerely,

Cece Sellgren
Stormwater Manager
County Watershed Program

CS:cw
G:\fldctl\NPDES\AnlRpt\1112 AnlRpt\Corp Yard NOD\Corp Yard NOD Response.docx

c: David Twa, County Administrator
Laura Strobel, County Administrator's Office
Julia R. Bueren, Public Works Director
R. Mitch Avalon, Deputy Public Works Director
Stephen Silveira, Deputy Public Works Director
Mike Carlson, Flood Control Div.
Joe Yee, Maintenance Div.
Pat Giles, Maintenance Div.
Anthony Medina, Maintenance Div.
Mike Giles, Maintenance Div.
Kevin Lachapelle, Facilities Maintenance Div.
Devra Lewis, HSD–Hazardous Materials Div.

Contra Costa County
Public Works
Department

Julia R. Bueren, Director
Deputy Directors
R. Mitch Avalon
Brian M. Balbas
Stephen Kowalewski
Stephen Silveira

February 8, 2013

Shin-Roei Lee
Chief, Watershed Management Division
San Francisco Bay Regional Water Quality Control Board
1515 Clay St., Suite 1400
Oakland, CA 94612

RE: Notice of Violation dated December 10, 2012

Dear Ms. Lee:

This letter provides Contra Costa County's response to the Notice of Violation (NOV) letter dated December 10, 2012. The County Watershed Program (CWP), which administers the County's stormwater permits, appreciates the additional time to meet with the many different divisions and departments of the County. The San Francisco Bay Regional Water Quality Control Board (Regional Board) audit conducted in May 2012, upon which the NOV is based, provided an opportunity for me to examine in detail many elements of the County's National Pollutant Discharge Elimination System (NPDES) permit, after having taken leadership of the CWP a few months prior.

The County agrees that some elements of the NPDES compliance program do not comply with the strict letter of the County's NPDES permit, the Municipal Regional Permit (MRP). I have found aspects of the County's NPDES Program that are inadequate in their implementation, most notably follow-up enforcement of violations, consistency of documentation, and accountability across County divisions and departments. As the County's Stormwater Manager, I am committed to addressing and improving these processes. Several recommended and required actions within the NOV call upon the County to revise or update standard operating procedures. I disagree that the MRP has the authority to dictate specific County processes or procedures like filing systems and standard operating procedures. However, the CWP will work toward the development of Standard Operating Procedures where time and budgets allow.

The remainder of this letter responds to specific required and recommended actions outlined in the NOV. I have included full text of each violation description and the required and recommended actions. Each required and recommended action includes the County's response and a time frame for completion, if applicable. The time frame for all actions is designed for implementation beginning in Permit Year 2013-2014.

Violation #1: The County failed to update its legal authority to be consistent with the MRP.

The legal authority is missing the four types of special land uses that trigger LID source control, site design, and stormwater treatment for creation or addition of 5,000 square feet or more of impervious surface. The exemptions for LID source control, site design, and stormwater treatment are not consistent with the MRP. Some information in the legal authority is outdated.

Required Action #1: The County shall update its legal authority to be consistent with the MRP, to the extent necessary to effectively regulate projects to the current permit standard (see Recommended Action #1).

- **County Response: The County's stormwater ordinance has sufficient authority, as it makes reference to the current NPDES permit. The County's ordinance is based upon a model ordinance developed by the Contra Costa Clean Water Program's (CCCWP) Legal Workgroup consisting of members of the City/County Attorneys' Association.**

- **Timeline: Not applicable.**

Recommended Action #1: The County should just refer to the C.3. requirements in its stormwater permit (i.e. "New Development and Redevelopment requirements in the County's NPDES Permit Number CAS612008") instead of modifying its legal authority each time a new requirement becomes effective in Provision C.3.

- **County Response: As stated above, the County's stormwater ordinance has sufficient authority, as it makes reference to the current NPDES permit. However, the CCCWP has just completed a final draft of an updated Model Stormwater Ordinance, which the County may adopt in the future. The updated Model Stormwater Ordinance eliminates many of the specific requirements contained in the original C.3 amendment adopted in 2003.**

- **Timeline: Not applicable.**

Deficiency #1: The County failed to have a database or equivalent tabular format of all its Regulated Projects that have installed onsite, joint, and/or offsite stormwater treatment system as required by Provision C.3.h.

The County does have a tabular format listing its stormwater treatment systems but it does not include all of the information required by Provision C.3.h.

Required Action #2: The County shall update its tabular format to include all of the information required by Provision C.3.h.ii.(5).

- **County Response: The CWP will update the tabular database to include all of the required information.**

- **Timeline: June 30, 2013**

Violation #2: The County failed to develop a prioritized plan for inspecting all installed stormwater treatment systems and hydromodification controls.

The County does not have a prioritized plan for inspecting all installed stormwater treatment systems and hydromodification controls but staff did state that the County inspects all of its stormwater treatment systems annually. Based on Water Board staff's review of the County's tabular format listing its stormwater treatment systems and inspection notes for the past three fiscal years, it appears that the County does inspect its installed stormwater treatment systems frequently.

Required Action #3: The County shall develop and implement a prioritized plan for inspecting all installed stormwater treatment systems and hydromodification controls.

- **County Response: At the time of the compliance inspection, the County had 13 stormwater treatment facilities (SWTF). Staff at the County Watershed Program (CWP) was inspecting these SWTF at least every two years, sometimes more than once per year. The CWP will develop a prioritized plan to meet the requirements of the MRP. Beginning in Permit Year 2013-2014, each SWTF will be monitored once every five years, as required in the MRP.**

- **Timeline: June 30, 2013**

Violation #3: The County failed to ensure that all runoff from C.3. projects are treated.

Provision C.3. requires the County to ensure that runoff from all regulated projects are treated in adequately designed treatment measures. For the Belmont Terrace site, the engineering drawing shows that portions of the runoff from both Falling Star Drive and

Little Valley Drive do not get treated. Mr. Swartz confirmed this observation out in the field.

Required Action #4: Moving forward, the County shall ensure that all runoff from regulated projects are treated in adequately designed treatment measures and that the treatment measures are functional before accepting the project. If treatment cannot be obtained on-site, alternate or off-site treatment can be employed.

- **County Response: The Belmont Terrace project reviewed by your staff was the first project in the County to implement the C.3 treatment control requirements. This project was technically "grandfathered" under the previous NPDES permit. However, the County required this project to comply with the new C.3 rules. Lessons learned from this project and subsequent projects have been incorporated into the CCCWP's Stormwater C.3 Guidebook. The CWP will continue to ensure that all runoff from C.3 projects are treated in accordance with Provision C.3.**

- **Timeline: Not applicable.**

Required Action #5: The County shall develop a template of required information for Operation and Maintenance (O&M) Agreements and ensure that all O&M Agreements have the required information.

The O&M Agreement for El Rincon includes requirement for inspection, frequency of inspection, and documentation of inspections but the O&M Agreement for California Shakespeare Theater does not require any of those items.

The County's tabular format shows self-certification inspections for a number of sites. There is no discussion on the requirements of self-certification inspections in the O&M Agreements for either site.

- **County Response: The County has templates for O&M Agreements, which go well beyond the requirements specified in Provision C.3. h. ii. (5). The self-certification requirement within the agreement is an additional requirement placed by the County, above and beyond those specified in the MRP. The annual certification reminds property owners of the special nature of these facilities and prompts them to assess their health.**

- **Timeline: Not Applicable**

Required Action #6: The County shall maintain a more complete filing system available for Provision C.3. inspection.

It was challenging to find documents in the files that showed compliance with Provision C.3. because the files were incomplete. County staff keeps some personal files of the final SWCPs, signed and/or adopted O&M Agreements, and inspection records that are not available in the main files. County staff stated that the paper files get purged as newer versions of documents get submitted and eventually, the files all get archived. When staff leaves, these personal files can get lost. At a minimum, the County's files for each finished project that triggered Provision C.3. need to have the final SWCP with engineering drawings showing what was installed and where it was installed, the document showing that the site was annexed into the Community Facilities District and executed O&M Agreement. These documents should not be archived because they are needed for O&M inspections. Inspection forms and correspondence regarding O&M all need to be filed and available for use.

- **County Response: There were a large number of files to review. It is possible that your staff may have been confused about where files are kept. The County's filing systems are complete and accurate, even if they are not located within a single, centralized location. The MRP does not regulate filing systems used by Permittees. The County maintains files within the appropriate areas, and they are available for reference when needed.**

- **Timeline: Not applicable.**

Required Action #7: The County's O&M Agreements to have engineering drawings and/or maps showing the location of all treatment units.

As property owners, property managers, and County staff change, it is important for the O&M Agreements to have engineering drawing and/or maps showing the location of all treatment units.

- **County Response: The County's O&M Agreements are consistent with the requirements in the MRP and ensure all installed treatment and hydromodification controls are properly operated and maintained.**

- **Timeline: Not applicable.**

Required Action #8: Moving forward, the County shall ensure that under drains for bioretention units are at least two-thirds the width of the bottom of the bioretention units. This can reduce clogging at the interface with the gravel drain layer and provide more area for infiltration.

- **County Response: The County uses bioretention design specifications contained in the most recent version of the Stormwater C.3 Guidebook at the time the development was submitted. I welcome a regional discussion on the Water Board's proposed underdrain design standard.**

- **Timeline: Not applicable**

Required Action #9: In its ERP, the County shall make revisions to:
(1) require immediate abatement of an active non-stormwater pollutant discharge;
(2) assign an enforcement level for repeat violations of the field scenarios in Level 1 and repeat non-stormwater pollutant discharges in Level 2;
(3) state which staff position has the authority to issue each level of enforcement;
(4) provide guidance on when and under what conditions Cease and Desist Orders, Stop Work Orders, Orders to Clean and Abate, or Notices to Clean enforcement mechanisms can be employed;
(5) include guidance for failure to report spills, falsification of information, improper signature or certification, and failure to submit required information by due date; and
(6) ensure the discussions and the flow chart are consistent.

- **County Response: The CWP has decided to split the Enforcement Response Plan (ERP) for C.5 (Illicit Discharge) and C.6 (Construction Site Controls) from C.4 (Industrial and Commercial Site Controls). A draft of the C.4 ERP has been submitted to me for review. The C.5 & C.6 ERP is still being written.**
  (1) Table 1: Flowchart of Tiered Enforcement Response from the May 2012 ERP, page 13 (enclosed), uses the term "Immediate Abate" for minor violations (Tier II) and major violations (Tier III). Furthermore Section C.4.c. ii. (2) requires "all violations must be corrected in a timely manner with the goal of correcting them (emphasis added) before the next rain event but not longer than 10 business days." I do not believe "timely" is synonymous with "immediate." The County's ERP complies with Section C.2.c. ii. (2) of the MRP.

(2) Table 1 of the May 2012 ERP clearly shows that violations not corrected "before the rain event but no longer than 10 days" shall be elevated to the next enforcement level.

(3) The requirement to state which staff position has the authority to issue each level of enforcement is not specified within the MRP. However, I agree that it is a worthwhile addition and the CWP will include it in the ERP updates.

(4) The CWP will modify the ERP to provide guidance when and under what conditions Cease and Desist Orders, Stop Work Orders, or Orders to Clean and Abate enforcement mechanisms can be employed.

(5) This guidance is not specified within the MRP. However, I agree that it is a worthwhile addition and the CWP will include it in the ERP updates.

(6) The CWP will modify the ERPs to ensure the discussions and the flowchart are consistent.

- **Timeline: June 30, 2013**

Required Action #10: The County shall revise its ERP and Business Inspection Plan to elevate all businesses cited for pollutant exposure, poor housekeeping, or evidence of historical discharge for priority (annual) inspections. Once the businesses are found to be in compliance, the County can place them back on their regular inspection schedule. C.4.b.(3) requires the County to prioritize facilities for inspections.

- **County Response: Section C.4.b. ii. (3) of the MRP refers to prioritizing inspections based upon "pollutant sources on site, pollutants of concern, proximity to a waterbody, violation history of the facility, and other relevant factors." Table 2-2 of the May 2012 Business Inspection Plan (BIP) (enclosed) refers to "enforcement re-inspection" as a category requiring annual reinspection. The text of the BIP refers to "violation history" (Section 2.2, pg. 5) as a factor that would require more frequent inspections. Section 2.3 further clarifies the point, by noting a business that "shows evidence of active non-stormwater pollutant discharges during a routine inspection and gets cited with a Notice of Violation . . . is subject to 'priority' inspection at least once the following year." This text adequately demonstrates compliance with the MRP.**

- **Timeline: Not applicable.**

Recommended Action #2: The County should also revise its ERP and Business Inspection Plan to elevate all businesses cited for stated business practices for priority inspections.

- **County Response: Section C.4.b. ii. (3) of the MRP lists the conditions that trigger prioritized inspections. "Stated business practices" is not included. Stated business practices that have the potential to pollute trigger a Level I response: Verbal warning, Warning Notice/Notice to Comply/Education. Businesses given one of these actions are not required to be assigned to priority inspections. The MRP requires business cited for violations shall be assigned to priority inspections. The BIP and ERP clearly state this.**

- **Timeline: Not applicable.**

Deficiency #2: The ERP fails to clearly direct County staff to verify that all corrective actions have been implemented in a timely manner, before the next rain event but no longer than 10 business days from the time the violations were first discovered, unless longer time is required with a statement of justification.

The ERP can give County staff the option, under certain scenarios, to allow facilities to self-certify that the implementation of corrective actions has been done in a timely manner. An email or fax with pictures and a signed certification statement could be an option for self-certification of corrective actions. The submittal of the email or fax must demonstrate that compliance was achieved in a timely manner.

Immediate corrections can be temporary and short-term but the County must have procedures in place to verify the implementation of the temporary, short-term corrections, require a timeline for the permanent corrections, and verify the implementation of the permanent corrections.

Required Action #11: The County shall (1) revise its ERP to clearly direct staff to verify that all corrective actions for violations have been implemented in a timely manner, before the next rain event but no longer than 10 business days from the time the violations were first discovered, unless longer time is required with a statement of justification; and (2) update its standard operating procedures for Provisions C.4., C.5., and C.6. inspections to include verification that corrective actions have been implemented in a timely manner and guidance on putting together timelines for implementation of permanent corrective actions.

- **<u>County Response:</u> The CWP will update the ERPs to include the requirement to verify that all corrective actions for violations have been implemented in a timely manner, before the next rain event, but no longer than 10 business days from the time the violations were first discovered, unless longer time is required with a statement of justification. There is no requirement in the MRP to develop standard operating procedures.**

- **<u>Timeline:</u> June 30, 2013**

<u>Required Action #12:</u> The County shall (1) evaluate its businesses for the functional aspects and types listed in C.4.b.ii. of the MRP and prioritize them into its BIP for inspection, as appropriate; (2) include a discussion in the BIP that shows that the County has considered the functional aspects and types listed in C.4.b.ii. for inclusion into its BIP; (3) include the total number and list of facilities requiring inspections in the BIP; and (4) have its BIP available for use and dissemination as one document.

- **<u>County Response:</u> The CWP will update the BIP to include the discussion of the process to elevate businesses by functional aspect and types. Since the number of facilities requiring inspections change due to the inclusion of new businesses and the deletion of failed businesses, the CWP will annually attach a list of the businesses requiring inspection as an appendix to the BIP. This appendix will be a separate computer file from the BIP, but will be printed out with the BIP and other appendices.**

- **<u>Timeline:</u> June 30, 2013**

<u>Deficiency #3:</u> The *Enforcement Response Plan Inspection Report Terminology* fails to comply with the MRP requirements. In addition, the *Enforcement Response Plan Inspection Report Terminology* fails to be consistent with the County's ERP. See Attachment 3 for summary of review.

<u>Required Action #13:</u> The County shall revise its *Enforcement Response Plan Inspection Report Terminology* to be consistent with its ERP, which will be revised pursuant to the above required actions.

- **<u>County Response:</u> I acknowledge that there is another level of enforcement in "Appendix D: Enforcement Response Plan Report Terminology." The additional level of enforcement refers to those businesses that pass the inspection with no problems. This additional**

column is confusing and will be removed from the appendix in the ERP revisions. Otherwise, the definitions and terminology are consistent with the rest of the ERP. The County's ERP includes a section called "Definitions" on page vii and viii. These definitions are consistent with the rest of the document.

- **Timeline: June 30, 2013**

Deficiency #4: The Inspection Plan for Hazardous Materials fails to clearly direct inspectors to verify that all corrective actions have been implemented in a timely manner, before the next rain event but no longer than 10 business days from the time the violations were first discovered, unless longer time is required with a statement of justification.

Required Action #14: The County shall ensure that the information contained in future Inspections Plans for Hazardous Materials and Environmental Health is consistent with its revised ERP.

The County must require actual non-stormwater pollutant discharges to be abated immediately. All violations, regardless of their status as minor, major, Class II, or Incident Response, must be corrected within a timely manner, before the next rain event but no longer than 10 business days after the violations are discovered, unless longer time is required with a statement of justification. Corrective actions can be temporary and a longer compliance time can be allowed under certain circumstances such as capital improvement. Rationales for longer compliance times must be documented pursuant to Provision C.4.

Again, the County, under certain scenarios, can allow facilities to self-certify that the implementation of corrective actions have been done in a timely manner. An email or fax with pictures and a signed certification statement could be an option for self-certification of corrective actions. But the submittal of the email or fax must demonstrate compliance was achieved in a timely manner. These certain scenarios and procedures for self-certification must be included in the ERP, and clearly communicated in the Interdepartmental Agreements and to inspectors.

- **County Response: The terminology of the BIP is consistent with the terminology of the ERP. The BIP prioritizes which facilities are inspected. The ERP outlines the inspection process. As discussed in the County's response to Required Action # 11, the CWP will amend the ERP to state that all violations (but not Warnings or Notices to Comply)**

shall be corrected before the next rain event or within 10 business days.

- **Timeline: June 30, 2013**

Required Action #15: The County shall (1) develop and implement mechanisms to ensure that it has an accurate list of all industrial facilities located in unincorporated County and (2) update its BIP with discussions of these mechanisms and accurate lists.

- **County Response: The CWP will update the BIP to include the process to add new businesses and delete closed businesses. Appendix 3-1 of the BID will be updated annually to reflect business turnover. The BIP already includes the process to prioritize business inspections.**

- **Timeline: June 30, 2013**

Required Action #16: The County shall evaluate and better define in its ERP and Business Inspection Plan what the County expects when a BMP is "Recommended" during an inspection by Hazardous Waste Program inspectors. It is unclear if recommendations are requirements and if there are consequences for non-implementation of recommendations tied to violations.

- **County Response: "Recommendations" are used with Level 1 enforcement actions — Warning Notices and Notices to Comply. Actions associated with Violations (Levels II–IV) are requirements. The CWP will better define these terms in the revised ERP. They will not be discussed in the BIP.**

- **Timeline: June 30, 2013**

Required Action #17: The County shall evaluate how it maintains its files and ensure that its files are accurate and complete.

- **County Response: There is no requirement in the MRP regarding maintenance of files. The County's files are accurate and complete. The CWP and/or the CCWP will continue to train staff on the importance of accurate and complete files in its annual training with staff at the Hazardous Materials Division and Environmental Health Division of the Health Services Department. The CWP will also review filing schemes with senior staff in each of these divisions.**

- **Timeline: Not applicable.**

Violation #4: The County failed to require immediate abatement of discharge, and require and/or verify implementation of corrective actions in a timely manner, with the goal of correcting them before the next rain event but no longer than 10 business days after the violations are discovered. The County also failed to provide rationale for compliance dates beyond 10 business days after the violations are discovered.

Attachment 6 lists the facilities that did not have corrective action required and/or verified in a timely manner.

The Hazardous Materials Program's inspection form allows 30 days for businesses to correct minor violations.

Pinole-Rodeo Autowreckers was inspected on September 27, 2011. But since the inspection record is incomplete, it is unclear what were the specific violations, required corrective actions, enforcement action, and the required compliance date. A subsequent inspection on January 20, 2012 shows that the required compliance date had been extended to July 20, 2012. The MRP requires a rationale to be recorded if more than 10 business days are required for compliance. There is no rationale for the extension in the records reviewed. In discussions with Hazardous Materials staff, it appears that the rationale may be that local officials have asked the County to work with the small business. Any rationale must have a timeline listing the specific corrective actions that must be accomplished by certain dates. There is no timeline for corrective actions, but the County did note improvements during its January 20, 2012 inspection and the inspection form for the March 6, 2012 notes that the business was making improvements. Immediate corrections can be temporary and short-term but the County must have procedures in place to verify the implementation of the temporary, short-term corrections, require a timeline for the permanent corrections, and verify the implementation of the permanent corrections. This site has had a history of stormwater violations and has been referred to the Department of Fish and Game and the Water Board.

Required Action #18: The County shall ensure that appropriate corrective actions are required for violations and that the corrective actions are verified in a timely manner. This should be before the next rain event, but no later than 10-business days after the violations are discovered. The County shall revise its inspection forms to reflect this MRP requirement. The County shall also ensure that rationale, for compliance dates beyond 10 business days after the violations are discovered, are recorded and compliance timelines are established.

- **<u>County Response:</u> The Industrial Facilities Inspection form was revised in July 2012 in response to the audit. It may be revised again. The Commercial Inspection form still needs to be revised. The CWP and/or the CCCWP will continue to conduct annual training with staff from Environmental Health and Hazardous Material Divisions of the Health Services Department. The CWP is also developing a process for inspection sheets to be submitted to CWP staff at regular intervals for compliance review.**

- **<u>Timeline:</u> June 30, 2013**

<u>Violation #5:</u> The County failed to implement its ERP.

Of the 35 Food Service inspections that found violations, only one enforcement action was taken: Cease and Desist to Tacos El Grullense/Mobile Truck on January 15, 2010. The rest of the facilities with violations were just given educational materials. (Please see Attachment 7.)

Hazardous Waste inspectors cite minor, Class I, or Class II violations. These three types of violations are not listed or defined in the County's ERP.

Of the 36 inspections done by Hazardous Waste inspectors that found violations, the County took four enforcement actions:

1. AG Schwartz Trucking, 3/24/10 , Class II, Notice to Comply
2. Deal Autowreckers, 11/21/11, Minor and Recommended BMPs, Notice to Comply
3. Diablo Boat Works, 3/24/10, Class II, Notice of Violation
4. Pinole-Rodeo Autowreckers, 6/15/10, Class II, Notice of Violation

No other enforcement actions were taken at businesses with violations, even at ones with Class II violations. (Please see Attachment 8.)

Pinole-Rodeo Autowreckers inspection form for January 20, 2012 noted "...run-off still leaving the property." Based on the notes for the business, the run-off was probably contaminated with non-stormwater pollutants from the business. No action was taken to stop or divert the run-off. And the run-off appears to be an ongoing problem since at least June 30, 2011.

<u>Required Action #19:</u> The County shall ensure consistent implementation of its ERP and revise both inspection forms to reflect the enforcement tools in its ERP.

- **<u>County Response:</u> The CWP and/or the CCCWP will continue to conduct annual training with staff from Environmental Health and Hazardous Material Divisions of the Health Services Department (HSD). The CWP is also developing a process for inspection sheets to be submitted to CWP staff at regular intervals for compliance review.**

- **<u>Timeline:</u> June 30, 2013**

<u>Required Action #20:</u> The County shall define "minor", "major", "Class I", and "Class II" violations in its ERP and associate them with appropriate enforcement tools.

- **<u>County Response:</u> Table 1: Flowchart of Tiered Enforcement Response of the May, 2012, ERP (enclosed) clearly defines "minor," "major," "Class I," and "Class II" violations. The ERP is being revised to create separate documents for C.4 and C.5/C.6.**

- **<u>Timeline:</u> June 30, 2013**

<u>Required Action #21:</u> The County shall provide training to staff responsible for implementing Provision C.4., C.5., and C.6. and the updated standard operating procedures; revised ERP; and revised inspection forms.

- **<u>County Response:</u> The CWP has already developed new inspection forms and trained staff from the Hazardous Material Division of HSD regarding the changes discussed by Regional Board staff during the May 2012 audit. Staff from the Environmental Health Division will be given new inspection forms and trained in the spring of 2013. A revised inspection form for Provision C.6 (Construction Site Controls) will be presented at training prior to the onset of the rainy season. The MRP does not require standard operating procedures.**

- **<u>Timeline:</u> June 30, 2013**

<u>Recommended Action #3:</u> The County should revise its industrial and commercial business inspection form to more clearly identify the violations and the required actions the business must implement. This is similar to how the Food Services inspection form is done.

- **<u>County Response:</u> The Hazardous Materials inspection forms have been revised. The Environmental Health inspection forms will be revised in the spring of 2013.**

- **Timeline: June 30, 2013**

Recommended Action #4: In the continuation sheets used by Hazardous Waste, the County should clearly identify the violation (i.e. SW09) with the required follow-up action that corrects the violation.

- **County Response: The Hazardous Materials inspection forms have been revised. They will be reviewed and possibly revised again. The Environmental Health inspection forms will be revised in the spring of 2013.**

- **Timeline: June 30, 2013**

Violation #6: The County failed to respond in a timely manner, require immediate abatement of the discharge, effectively eliminate the illicit discharge at Pinole-Rodeo Autowreckers, take appropriate enforcement actions, and require implementation of necessary temporary controls to eliminate the sheen leaking from the property into the stormdrain.

Required Action #22: The County shall revise its standard operating procedures to direct inspectors to (1) respond to illicit discharge complaints in a timely manner, (2) ensure that all illicit discharges are fully cleaned up and corrective actions are implemented in a timely manner, (3) sample discharge and receiving water as feasible, and (4) implement its ERP appropriately. The County shall also revise its ERP to direct (1) immediate implementation of BMPs to divert the illicit discharge away from the storm drain and/or waterbodies, (2) timely clean-up and timely verification of the corrective actions, (3) escalation of enforcement for noncompliance and for patterns of noncompliance, and (4) requirement for corrective actions to reduce future non-compliance.

- **County Response: The CWP has already developed new inspection forms and trained staff from the Hazardous Materials Division of HSD regarding the changes discussed by the Regional Board staff during the May 2012 audit. They may be revised again. Staff from the Environmental Health Division will be given new inspection forms and trained in the spring of 2013. The MRP does not require the development of standard operating procedures. Section C.4.c. requires "all violations must be corrected in a timely manner with a goal of correcting them before the next rain event but no longer than 10 business days." This is not "immediate implementation." The ERP will**

be revised to create separate documents for C.4 and C.5/C.6. and will comply with Provision C.4.c. of the MRP.

- **Timeline: June 30, 2013**

Required Action #23: The County shall train its inspectors on the revised standard operating procedures and ERP.

- **County Response: The CWP and/or the CCCWP will continue to conduct annual training with staff from Environmental Health and Hazardous Material Divisions of HSD. Revisions to the ERP will be a central topic in these trainings.**

- **Timeline: Ongoing**

Required Action #24: The County shall discuss if the public landscaping, private common landscaping, and private front yard landscaping are complete (land fully stabilized) at the time of their respective annexations into the City of San Ramon.

- **County Response: It is not clear whether this required action is tied to any violation or deficiency. Public landscaping, private common landscaping, and private front yard landscaping do not need to be complete for a subdivision to be annexed into a city. The County will continue to discuss the status of any developments in progress with the staff from the city who is annexing the property.**

- **Timeline: Not applicable.**

Required Action #25: The County shall define the difference between "needs attention" and "violation" in its inspection form; update its standard operating procedures on what enforcement tools are available for a BMP that "needs attention" and those that are in "violation"; and train its inspectors on these definitions and the enforcement tools available for each.

- **County Response: The Construction Site Inspection Form will be updated to distinguish between "needs attention" (Level 1 — Written Notice/Notice to Comply) and "violation" (Level 2 — Violation). Construction and grading inspectors will be trained as to the new form prior to the beginning of the next construction season.**

- **Timeline: October 1, 2013**

Violation 7: The inspection forms fail to show that corrective actions for violations were consistently verified in a timely manner. The MRP requires timely correction of violations, before the next rain event but no later than 10 business days after the violations are discovered, unless a justification for a longer time is recorded.

Required Action #26: The County shall (1) update its inspection form to allow inspectors more flexibility to record observations in the field; (2) update its standard operating procedures for inspections to reflect the requirements of the MRP; and (3) train its inspectors on the standard operating procedures for inspections and how to fill out each section of the inspection form completely and accurately.

- **County Response: The MRP does not regulate the formatting of inspection forms, nor does it require the development of standard operating procedures. This is at the County's discretion. Construction and grading inspectors will be trained as to the new form prior to the beginning of the next construction season.**

- **Timeline: October 1, 2013**

Violation #8: The County failed to inspect all construction sites disturbing one or more acre of land monthly during the rainy season.

Required Action #27: The County shall train its inspectors to (1) conduct monthly inspections, October – April, at all construction sites disturbing one or more acre of land and at all high priority sites, through all phases of construction until sites are fully stabilized by landscaping or with the installation of permanent erosion control measures, (2) state in the inspection forms when sites are fully stabilized, and (3) record on the first inspection form an appropriate comment, such as "First inspection", for sites that start construction after October. The above information shall also be included in the standard operating procedures for inspections.

- **County Response: A separate ERP for C.5 (Illicit Discharge) and C.6 (Construction Site Controls) is being developed. Construction and grading inspectors will be trained about the new ERP and inspection form prior to the beginning of the next construction season.**

- **Timeline: June 30, 2013 and October 1, 2013**

Violation #9: The County's tracking data failed to match its 2011-2012 Annual Report in a number of required fields.

Required Action #28: The County shall ensure that the information in the Annual Report matches the data in the inspection forms and tracking data table.

- **County Response: The CWP is implementing a procedure to require all construction site inspection forms to be submitted to the CWP on a monthly basis. This will allow staff at the CWP the ability to catch inconsistencies early and make needed corrections.**

- **Timeline: Ongoing**

Recommended Action #5: The County should revise its electronic database/tabular format so that it is easier to read and follow the inspections and actions. Revision to its electronic database/tabular format should help the County with annual reporting.

- **County Response: The CWP is exploring the use of other databases.**

- **Timeline: Ongoing**

Required Action #29: The County shall (1) update the enforcement options in the inspection form to match the options provided in the County's ERP or vice versa, (2) update its standard operating procedures for inspections, and (3) train its staff on the updated inspection form and standard operating procedures.

- **County Response: The CWP is writing a separate ERP for C.5 & C.6 to better address the unique challenges of enforcement on construction sites. The MRP does not require standard operating procedures. The CWP will conduct training prior to next construction season.**

- **Timeline: C.6 ERP: June 30, 2013; Inspector training: October 1, 2013**

Required Action #30: The County shall ensure that construction sites have appropriate BMPs year round to minimize pollutant discharge to receiving waters.

- **County Response: A separate ERP for C.5 & C.6 is being developed. Construction and grading inspectors will be trained as to the new ERP and inspection form prior to the beginning of next construction season.**

- **Timeline: C.6 ERP: June 30, 2013; Inspector training: October 1, 2013**

The County remains committed to continuous improvement of its stormwater programs designed to improve water quality in our creeks, the Delta, and the Bay. I remain committed to continuing to work collaboratively with you and your staff to achieve these goals. If you have any questions, please contact me by phone at (925) 313-2296 or by e-mail at csell@pw.cccounty.us.

Sincerely,

Cece Sellgren

Cece Sellgren
Watershed Program Manager
County Watershed Program

CS:cw
\\PW-DATA\grpdata\fldctl\NPDES\Admin\2012 Audit\NOV\Response to SFRB's 12-10-12 NOV - Final.docx
Enclosures:

- Table 1: Flowchart of Tiered Enforcement Response from "Contra Costa County (Unincorporated) and Contra Costa County Flood Control and Water Conservation District's Enforcement Response Plan," May 2012.
- Table 2-2: Inspection Frequency by Major Business Type from "Industrial and Commercial Businesses Stormwater Inspection Plan," Contra Costa County Public Works Department, May 2012

c: David Twa, County Administrator
Laura Strobel, County Administrator's Office
Julia R. Bueren, Public Works Director
R. Mitch Avalon, Deputy Public Works Director
Mike Carlson, Flood Control
Kevin Emigh, Design and Construction
Dante Morabe, Design and Construction
Warren Lai, Engineering Services
Rich Lierly, Engineering Services
Tom Dalziel, Contra Costa Clean Water Program
David Swartz, County Watershed Program
Jason Crapo, Deputy Director, Dept. of Conservation & Development
Marie Taylor, Dept. of Conservation & Development—Construction Inspection
Steve Morioka, Health Services Dept.—Hazardous Materials Division
Devra Lewis, Health Services Dept.—Hazardous Materials Division
Marilyn Underwood, Health Services Dept.—Environmental Health
John Wiggins, Health Services Dept.—Environmental Health
Tom Mumley, San Francisco Bay Regional Water Quality Control Board
Dale Bowyer, San Francisco Bay Regional Water Quality Control Board
Selina Louie, San Francisco Bay Regional Water Quality Control Board

Enclosure #1
- Required Action #9
- Required Action #20

TABLE 1:

FLOWCHART OF TIERED ENFORCEMENT RESPONSE

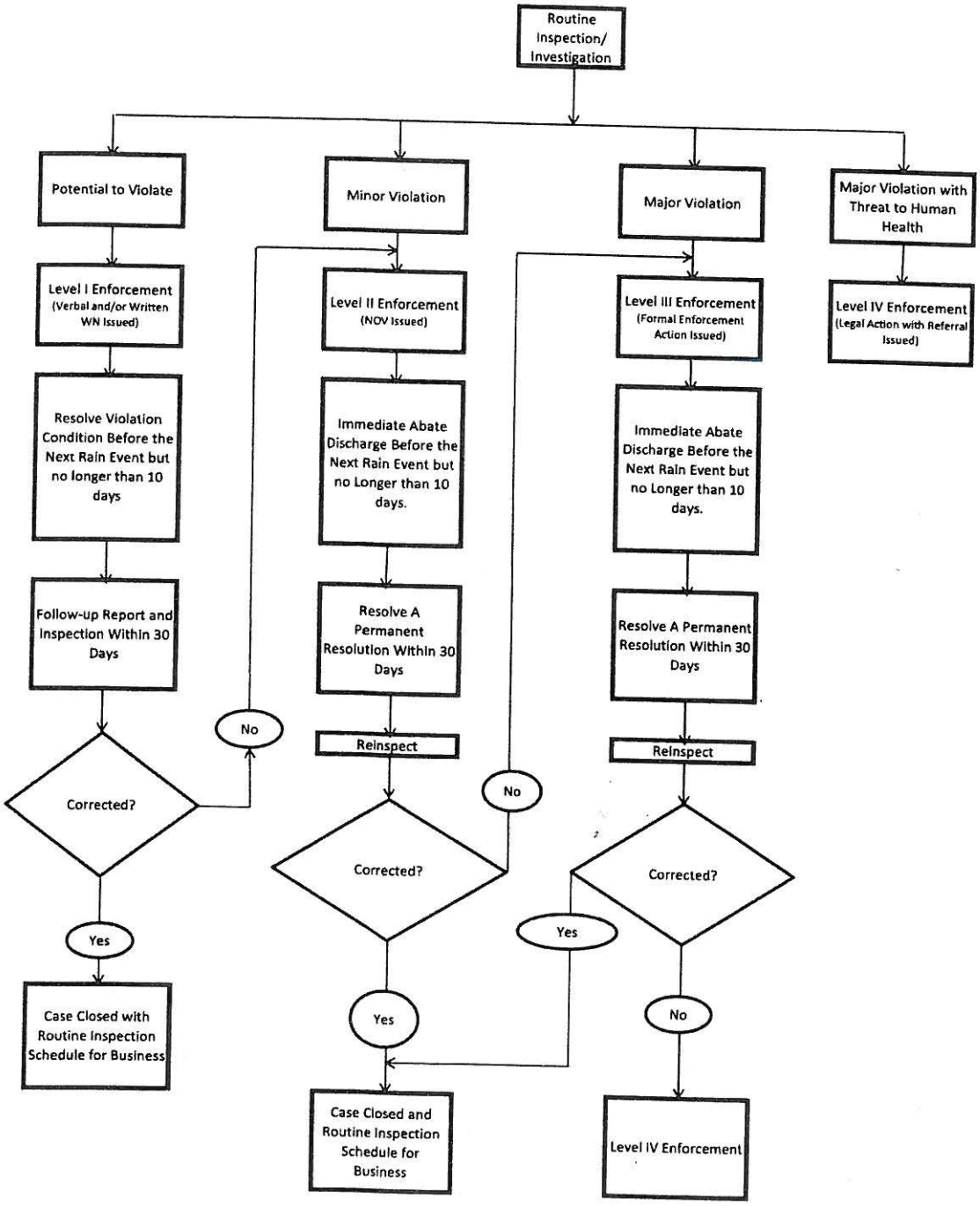

Enclosure #2
- Required Action #9

TABLE 2-2 INSPECTION FREQUENCY BY MAJOR BUSINESS TYPE				
Business Type	**Annual**	**1-2 Yrs**	**2-3 Yrs**	**5 Years**
Notice of Intent (NOI) Filers	X			
Community/Commercial Pools	X			
Enforcement Re-inspection	X			
Pretreatment Permitted Facilities	X			
Vehicle Service Facilities (General)			X	
Oil Change Shops			X	
Auto Body Shops w/ or w/o washpad			X	
Fleet Operations			X	
Retail Car Washes			X	
Food Service Facilities			X	
Fast Food Restaurants			X	
Full Service Food Restaurants			X	
Embedded Food Services (cafeteria, deli, etc.)			X	
Grocery Stores			X	
Horseboarding Facilities				X
Retail Gas Outlets			X	
Plant Nurseries		X		
Golf Courses (Food/Vehicle Operations/Grounds)		X		
Manufacturing Facilities	X			
Cement & Asphalt Batch Plants		X		
Corporation Yards	X			
Auto Dismantlers	X			

California Regional Water Quality Control Board
San Francisco Bay Region

1515 Clay Street, Suite 1400, Oakland, California 94612
(510) 622-2300 • Fax (510) 622-2460
http://www.waterboards.ca.gov/sanfranciscobay

Linda S. Adams
Secretary for
Environmental Protection

Arnold Schwarzenegger
Governor

April 5, 2010
CIWQS #: 218317

Mr. Rich Lierly
Floodplain/Watershed Manager
Contra Costa County
255 Glacier Drive
Martinez, California 94553

SUBJECT: TRANSMITTAL OF 2009 COMPLIANCE INSPECTION REPORT

Dear Mr. Lierly:

On November 9 – 12, 2009, U.S. Environmental Protection Agency Region IX's consultant, PG Environmental, LLC, conducted an inspection of Contra Costa County's Municipal Separate Storm Sewer System Construction Program. The purpose of the inspection was to assess Contra Costa County's compliance with the construction program requirements contained within its stormwater permit, Order No. 99-058. Detailed findings of the inspection are in the enclosed Compliance Inspection Report.

We concur with the deficiencies noted in the Compliance Inspection Report. However, we believe that Contra Costa County (County) should have already taken care of these deficiencies with the implementation of the Municipal Regional Stormwater NPDES Permit, Order R2-2009-0074 (MRP) effective December 1, 2009. Therefore, within two weeks of the above date, the County shall submit the following information:

1. A copy of the County's legal authority (MRP Provision C.6.a.);
2. A copy of the County's Enforcement Response Plan (MRP Provision C.6.b.);
3. Discuss how the County has implemented MRP Provision C.6.d. If available, include copies of standard operating procedures and filled-out checklists used to review erosion/pollution control plans or Stormwater Pollution Prevention Plans;
4. Copies of filled-out inspection forms for inspections conducted at Belmont Terrace and Gale Ranch from December 2009 – March 2010 (MRP Provision C.6.e.);
5. Discuss trainings or planned trainings to comply with the Staff Training Requirement in MRP Provision C.6.f. Please provide the following information for each of the trainings completed: training topics covered, dates of training, and percentage of inspectors attending each training. For trainings planned, please list planned topics and dates; and

6. Discuss the hand-off procedures for construction site control inspections from the County to the City of San Ramon, as it relates to Gale Ranch.

I want to thank County staff for meeting with the consultant, and providing the information and materials necessary to complete the inspection. Should you have questions, please call Selina Louie at (510) 622-2383 or by email at slouie@waterboards.ca.gov.

Sincerely,

Digitally signed by Christine Boschen
Date: 2010.04.05 10:36:08 -07'00'

Shin-Roei Lee, Chief
Watershed Management Division

Enclosure – Compliance Inspection Report

MUNICIPAL SEPARATE STORM SEWER SYSTEM (MS4) CONSTRUCTION PROGRAM COMPLIANCE INSPECTION

REPORT DATE: December 22, 2009
EVALUATION CONDUCTED: November 9 – 12, 2009

CONTRA COSTA COUNTY, CALIFORNIA

United States Environmental Protection Agency
Region 9
75 Hawthorne Street
San Francisco, CA 94105-3901

(This page intentionally left blank.)

CONTENTS

Page

SECTION 1.0 INTRODUCTION 1

SECTION 2.0 PERMIT COMPLIANCE REVIEW 3

APPENDIX A: SIGN-IN SHEET
APPENDIX B: NPDES PERMIT NO. CA0029912 AND SECTION 3 OF THE STORM WATER MANAGEMENT PLAN
APPENDIX C: CONSTRUCTION GENERAL PERMIT INSPECTIONS
APPENDIX D: CALTRANS FIBER ROLLS (SC-5) BMP SPECIFICATIONS AND DETAILS

(This page intentionally left blank.)

Section 1.0 Introduction

PG Environmental, LLC, a U.S. Environmental Protection Agency (EPA) Region IX contractor (hereafter, EPA Contract Inspector), conducted an inspection of Contra Costa County's Municipal Separate Storm Sewer System (MS4) Construction Program on November 9 – 12, 2009. Discharges from the MS4 are regulated under the National Pollutant Discharge Elimination System (NPDES) Permit No. CA0029912, Regional Board Order No. 99-058 (hereafter, the Permit), adopted on July 21, 1999 by the California Regional Water Quality Control Board, San Francisco Region (hereafter, Regional Board). The purpose of the inspection was to assess Contra Costa County's (hereafter, County) compliance with requirements of the Permit. The EPA Contract Inspector also assessed the implementation status of the County's current MS4 Construction Program with respect to their Individual Storm Water Management Plan (SWMP).

As a primary means of assessing compliance, the EPA Contract Inspector conducted two individual inspections of facilities located in the jurisdictional boundaries of Contra Costa County's MS4. Both of the facilities were construction sites where the owner or operator had obtained coverage under the *California State Water Resources Control Board (SWRCB) Order No. 99-08-DWQ, National Pollution Discharge Elimination System (NPDES), General Permit No. CAS000002 for Discharges of Storm Water Runoff Associated with Construction*, adopted on August 19, 1999 (hereafter, Construction General Permit). The purposes of the Construction General Permit inspections were to (1) assess the adequacy, appropriateness, and maintenance of best management practices (BMPs) employed by construction activities to prevent and reduce storm water pollution, and (2) gauge the overall effectiveness of the County's construction oversight activities. Reports for the Construction General Permit Inspections are provided in Appendix C.

The EPA Contract Inspector also evaluated compliance through a series of interviews with representatives from the Contra Costa County's Public Works Department; along with a series of records reviews and field verification exercises. Sign-in sheets for the November 12, 2009 meeting with the County representatives is presented in Appendix A. The primary representatives involved in the inspection were the following:

Contra Costa County Public Works Representatives:	Kevin Emigh, Assistant Public Works Director Rich Lierly, Flood Plain/Watershed Manager David Swartz, Watershed Management Planning Specialist Leigh Chavez, Environmental Rob Tavenier, Senior Civil Engineer Kenyon Johnson, Supervising Construction Inspector Kevin Dumtora, Building Inspector Nestor Baligocl, Building Inspector
EPA Contract Inspector:	Jared Richardson, PG Environmental, LLC

The MS4 Construction Program inspection focused specifically on Provision C.3 and C.4 of the Permit. The EPA Contract Inspector did not evaluate or assess compliance with any other requirements of the Permit. As such, the inspection was not intended to be a comprehensive evaluation of all components and requirements associated with the entire MS4 program.

Dry weather conditions were experienced throughout the inspection activities and program evaluation exercises. Weather history reports indicated no precipitation in the Contra Costa County area for the week preceding the inspections or during the week following the inspections.

Section 2.0 Permit Compliance Review

The EPA Contract Inspector conducted an evaluation of the Contra Costa County MS4 Construction Program to assess compliance with the requirements of the Permit. The Permit has an adoption date of July 21, 1999.

The EPA Contract Inspector identified several deficiencies (hereafter, inspection findings) regarding compliance with the Permit. The presentation of inspection findings in this section of the report does not constitute a formal compliance determination or violation. Additionally, this section of the report provides recommendations for how the County might improve the design and implementation of their current Storm Water Management Programs and also identifies program deficiencies that represent areas of concern for successful program implementation. All referenced documentation used as supporting evidence is provided in Appendix C and Appendix D. For clarity, items that require response are <u>underlined</u> while recommendations are presented in *italic*.

Section 2.1 Construction Component

Provisions C.3 and C.4 of the Permit require the County to develop and implement a Storm Water Management Plan and Performance Standards (also referred to as BMPs) to reduce pollutants in storm water discharges from construction sites to the MS4.

The EPA Contract Inspector conducted two individual inspections of private construction sites located in the County and/or served by the County's MS4 to evaluate compliance with the Construction General Permit. Summary observations pertaining to these sites are presented below in a series of individual construction site assessments. For a detailed description of the inspection findings from the Construction General Permit inspections refer to Appendix C. Following the individual construction site assessments, conclusions are presented which directly pertain to the County's oversight obligations under its MS4 permit. Due to the small number of sites, the Construction General Permit inspections may not be fully representative of the County's MS4 Construction Program as a whole.

<u>Belmont Terrace located at 4640 Pacheco Boulevard in Martinez, CA</u>

Adequate BMPs were not implemented to prevent the transport of sediment to Court H roadway from the Lot 45 construction entrance. Sediment and debris were observed beyond the Lot 45 construction entrance and in the Court H roadway just upgradient of a storm drain inlet (<u>see Appendix C, Inspection No. 1, Finding 3, Photographs 2 and 3</u>), a component of the County's MS4. In addition, the vehicle tracking control pad implemented at this construction entrance was not adequately installed (e.g., not large enough) to prevent the transport of sediment to the Court H roadway.

BMPs were not adequately installed or maintained to prevent the discharge of sediment from the areas of disturbance adjacent to Falling Star Drive roadway. The erosion logs implemented at the northeast end of Falling Star Drive and adjacent to the intersections of

Falling Star Drive and Courtyard J and Shadow Hill Drive roadways were not installed in accordance with BAT/BCT (see Appendix C, Inspection No. 1, Finding 4, Photographs 4 through 7). Specifically, the erosion logs were not properly staked or entrenched in the ground to retain sediment and prevent failure. As a result, there was a potential for discharge of sediment from the areas of disturbance adjacent to Falling Star Drive roadway and subsequently to downgradient storm drain inlets (see Appendix C, Inspection No. 1, Finding 4, Photographs 6 and 7), a component of the County's MS4.

A portable toilet located near the intersection of Falling Star Drive and Courtyard J roadway was not properly secured to prevent it from being knocked over or blown down. Furthermore, the portable toilet was placed on uneven ground directly upgradient and adjacent to a storm drain inlet (see Appendix C, Inspection No. 1, Finding 8, Photograph 16). As a result, there was a potential for a chemical and sanitary waste discharge to the storm drain inlet, a component of the County's MS4.

Gale Ranch Phase III located at 9055 S. Gale Ridge Road in San Ramon, CA

It should be noted that portions of the Gale Ranch Phase III project may have been annexed to the City of San Ramon and therefore may not be under the County's MS4 jurisdiction or control. However, the specific portions of the project annexed to the City of San Ramon were not able to be clearly identified at the time of the inspection.

Adequate BMPs were not implemented at an inlet located at the intersection of an alley and 7800 Privet Place, a County roadway. Sediment and debris accumulation was observed inside the storm drain inlet on the filter bag which also had large tears (see Appendix C, Inspection No. 2, Finding 3, Photographs 1 and 2). As a result, there was a high potential for the discharge of sediment into the County's MS4 system.

Adequate BMPs were not implemented to prevent and contain potential spills from a 5-gallon fuel storage tank located on the west side of Nutmeg Park Street near the intersection with Firpointe Street. Specifically, no cover or secondary containment was provided to prevent and contain potential spills from contributing pollutants to storm water runoff. As a result, there was a potential for the contribution of pollutants to storm water runoff and subsequent discharge to an adjacent and downgradient storm drain inlet (see Appendix C, Inspection No. 2, Finding 6, Photograph 10).

Portable toilets located in the alley near the intersection of 7800 Privet Place, and near the intersection of Falling Star Drive and Courtyard J roadway were not properly secured to prevent them from being knocked over or blown down. Furthermore, the portable toilets were improperly placed in the curb and gutter flowline directly adjacent to a storm drain inlet (see Appendix C, Inspection No. 2, Finding 7, Photograph 11). Visible fluid staining was observed in the curb and gutter flowline behind the portable toilets. As a result, there was a high potential for a chemical and sanitary waste discharge to the storm drain inlet.

Adequate BMPs were not implemented to prevent the transport of sediment to Main Branch Road from the construction entrance. Sediment and debris were observed beyond the construction entrance and in the County's curb and gutter flowline and associated Main Branch roadway (see Appendix C, Inspection No. 2, Finding 4, Photographs 6 and 7). As a result, there was a release of sediment from the area of disturbance to Main Branch roadway, a component of the County's MS4.

Adequate BMPs were not implemented to prevent the discharge of sediment from a soil stockpile located adjacent to Nutmeg Park Street (see Appendix C, Inspection No. 2, Finding 5, Photographs 8 and 9). Perimeter and erosion control BMPs were not implemented for the soil stockpile to prevent the discharge of sediment to the adjacent Nutmeg Park Street and curb and gutter, a component of the County's MS4. As a result, there was a potential for the discharge of sediment to the adjacent Nutmeg Park Street and associated curb and gutter flowline.

2.1.1 Need for Improved Construction Site Field Inspections. Table 3-1 of the County's SWMP on Construction Controls, Section NDCC-17 requires inspectors to ensure "proper implementation and maintenance of erosion control and materials/waste management BMPs (e.g., covering stockpiled materials, and designating work and storage areas) to minimize the discharge of pollutants." The County currently does not have dedicated erosion and sediment control (ESC) inspectors to conduct routine construction storm water inspections. Instead, the County's Public Works Department staff conduct grading, drainage, encroachment, and various building inspections at private construction sites. In addition, the County currently does not utilize an inspection checklist to evaluate storm water/ESC issues at private or public construction sites. It should be noted that the County uses a contract storm water consultant for some of the County's capital improvement projects.

The EPA Contract Inspector conducted two Construction General Permit inspections preceding the MS4 inspection. Construction site conditions observed during these activities suggest that the County's inspection practices for private construction sites do not adequately ensure compliance with the County's MS4 permit.

Specifically, at the Belmont Terrace project adequate tracking controls had not been implemented to prevent the transport of sediment to roadways (see Appendix C, Inspection No. 1, Finding 3, Photographs 2 and 3), erosion log BMPs were not properly implemented and maintained to prevent the discharge of sediment to downgradient storm drain inlets (see Appendix C, Inspection No. 1, Findings 4 and 5, Photographs 4 through 10) (see Appendix D), and adequate materials/waste management BMPs had not been implemented for leaking construction equipment (see Appendix C, Inspection No. 1, Finding 7, Photographs 14 and 15) and portable toilets (see Appendix C, Inspection No. 1, Finding 8, Photograph 16). In addition, at Gale Ranch Phase III project BMPs had not been adequately maintained to prevent the discharge of sediment to storm drain inlets (see Appendix C, Inspection No. 2, Finding 3, Photographs 1 through 5), BMPs were not implemented for covering of soil stockpiles (see Appendix C, Inspection No. 2, Finding 5, Photographs 8 and 9), and adequate storage and secondary containment was not

provided for a 5-gallon fuel storage tank located just upgradient of a storm drain inlet, a component of the County's MS4 (see Appendix C, Inspection No. 2, Finding 6, Photograph 10).

Based on these Construction General Permit inspections the County's construction site inspections need to be improved to ensure proper implementation and maintenance of structural and non-structural best management practices to reduce pollutants in storm water runoff from construction sites to the MS4.

2.1.2 Need for Adherence to Erosion and Sediment Control Standards.

Table 3-1 of the County's SWMP on Construction Controls, Section NDCC-12 requires the County to maintain an erosion control program "that includes requirements for minimum BMPs…." The EPA Contract Inspector conducted two Construction General Permit inspections preceding the MS4 inspection. Construction site conditions observed during these activities suggest that the County's inspection practices for private construction sites do not adequately ensure that minimum BMP requirements are being adequately implemented and maintained in accordance with the County's MS4 permit.

Based on interviews with the County's Public Works Department staff, it was communicated to the EPA Contract Inspector that the County defers to Caltrans BMP requirements as minimum BMPs for developers and contractors; however, BMPs observed during Construction General Permit inspections had not been properly implemented and maintained according to the Caltrans BMP requirements. For example, fiber roll BMPs implemented at the Belmont Terrace project were not properly staked or entrenched (see Appendix C, Inspection No. 1, Photographs 4 through 7) in accordance with the Caltrans BMP requirement (see Appendix D), and fiber roll BMPs implemented at the Gale Ranch Phase III project were not properly implemented and maintained (see Appendix C, Inspection No. 2, Photographs 8, 9, 12 and 13) in accordance with the Caltrans BMP requirement (see Appendix D).

Based on these Construction General Permit inspections and interviews with Public Works Department representatives the County's construction site inspections and erosion and sediment control program needs to be improved to ensure adherence to minimum BMP requirements (i.e., Caltrans BMPs as the County's standard) including proper implementation and maintenance of structural and non-structural best management practices to reduce pollutants in storm water runoff from construction sites to the MS4.

2.1.3 Recommendation Regarding Development and Implementation of the County's Storm Water Management Program.

One component of an effective MS4 program is the requirement for developers to prepare and submit a Storm Water Pollution Prevention Plan (SWPPP) for review and approval by the MS4. The County's Public Works Department representatives stated that all developers are required to prepare and submit a SWPPP for review and approval by the County prior to land disturbing activities in accordance with the SWPPP template on the County's website (http://www.co.contra-costa.ca.us/index.aspx?NID=429). However, based on Construction General Permit inspections and interviews with County Public Works

Department staff, plans are not adequately being reviewed and approved according to the SWPPP template and formal checklists are not being utilized by plan review and approval staff. Specifically, the Construction General Permit inspections identified various SWPPP templates and SWPPP deficiencies in use at construction sites that were not in accordance with the County's SWPPP template. *The EPA Contract Inspector recommends that the County reevaluate the MS4 program and its requirements for developers to prepare and submit SWPPP's, and the County's review and approval processe*

Appendix A
Inspection Sign-In Sheet

INSPECTION SIGN-IN SHEET (PLEASE PRINT)

Name of facility: Contra Costa County MS4 **Date conducted:** 11/12/09

~~WDID~~ No. CA0029912 NPDES

Name	Title	Company	Phone	Fax	E-Mail
Alex Anaya	Engineering Tech	CCC FCSWCD	(925) 313-2312		aanaya@pw.cccounty.us
Site Kenyon Johnson	Supervising Constr. Insp	CCC PWD	(925) 313-2244		kjohn@pw.cccounty.us
Kevin Emigh	Asst. PW Director	CCC PWD	(925) 313-2233		kemig@pw.cccounty.us
Kevin Dunlap	Building Inspection	CCCR	925 335-1155		kdunf@cccounty.us
Nestor Baligod	" "	" "	925 335-1122		NBalig@cccounty.us
Leigh Chavez	Public Works Environmental	CCC PWD	925 313-2200		lchav@pw.cccounty.us
David Swartz	Watershed Management Planning Specialist	CCC. PWD	925 313.2281		dswar@pw.cccounty.us
Rich Lienk	Watershed Manager	CCC. PWD	925 313-2348		rliene@pw.cccounty.us
Rob Tavernier	Sr. Civil Eng	CCC. PWD Const.			
Jared Richardson	EPA Contractor	PC Environmental/JEC	303-231-1737		jared.richardson@pcenvironmental

Appendix B
NPDES Permit No. CA0029912 and
Section 3 of the Storm Water Management Plan

California Regional Water Quality Control Board
San Francisco Bay Region

Winston H. Hickox
Secretary for Environmental Protection

Internet Address: http://www.swrcb.ca.gov
1515 Clay Street, Suite 1400, Oakland, California 94612
Phone (510) 622-2300 • FAX (510) 622-2460

Gray Davis
Governor

RECEIVED
AUG 2 1999
CC Clean Water Program

Certified Mail No.
Return Receipt Requested

Date: JUL 29 1999
File No.: 1538.01(MYM)

Mr. Donald P. Freitas
Program Manager
Contra Costa Clean Water Program
255 Glacier Drive
Martinez, CA 94553

NOTICE: The item(s) indicated by an "X" are enclosed herewith:

☒ **A.** One certified copy of an Order adopted by the Board on the date shown therein.

☐ **B.** Attachment to Order containing Requirements and Recommendations of other agencies.

☐ **C.** One copy of Executive Officer Summary Report which was considered by the Board on the date shown therein. The Motion(s) recommended therein was (were) adopted by the Regional Board on that date.

☐ **D.** Other -

Please contact Martin Musonge of my staff at (510) 622-2396 or e-mail mym@rb2.swrcb.ca.gov. if you have any questions regarding this matter.

Sincerely,

Loretta K. Barsamian

LORETTA K. BARSAMIAN
Executive Officer

Attachment: Order No. 99-058

CALIFORNIA REGIONAL WATER QUALITY CONTROL BOARD
SAN FRANCISCO BAY REGION

ORDER NO. 99-058
NPDES PERMIT NO. CA0029912

REISSUING WASTE DISCHARGE REQUIREMENTS FOR:

CONTRA COSTA COUNTY, CONTRA COSTA COUNTY FLOOD CONTROL AND WATER CONSERVATION DISTRICT, CITY OF CLAYTON, CITY OF CONCORD, TOWN OF DANVILLE, CITY OF EL CERRITO, CITY OF HERCULES, CITY OF LAFAYETTE, CITY OF MARTINEZ, TOWN OF MORAGA, CITY OF ORINDA, CITY OF PINOLE, CITY OF PITTSBURG, CITY OF PLEASANT HILL, CITY OF RICHMOND, CITY OF SAN PABLO, CITY OF SAN RAMON, CITY OF WALNUT CREEK, which have joined to form the CONTRA COSTA CLEAN WATER PROGRAM.

The California Regional Water Quality Control Board, San Francisco Bay Region (hereinafter referred to as the Regional Board) finds that:

1. The Contra Costa County Flood Control and Water Conservation District, Contra Costa County and 16 incorporated cities in the County which include the City of Clayton, City of Concord, Town of Danville, City of El Cerrito, City of Hercules, City of Lafayette, City of Martinez, Town of Moraga, City of Orinda, City of Pinole, City of Pittsburg, City of Pleasant Hill, City of Richmond, City of San Pablo, City of San Ramon, and the City of Walnut Creek (hereinafter Dischargers) have joined to form the Contra Costa Clean Water Program (hereinafter the Program), and have submitted an NPDES permit application package dated June 30, 1998, for re-issuance of waste discharge requirements under the National Pollutant Discharge Elimination System (NPDES) to implement "A Stormwater Management Plan for the Contra Costa Clean Water Program" dated June 30, 1998 (hereinafter the Plan) to discharge stormwater runoff from storm drains and watercourses that its members own and/or operate.

2. The Dischargers have jurisdiction over and/or maintenance responsibility for their respective municipal separate storm drain systems and/or watercourses that they own and/or operate in Contra Costa County (see County map Attachment 1). The discharge consists of the surface runoff generated from various land uses in all the hydrologic sub-basins which discharge into water courses which in turn flow into San Francisco Bay (Bay) and San Joaquin Delta (Delta). The quality and quantity of these discharges varied considerably and are affected by hydrology, geology, land use, season, and sequence and duration of hydrologic events. Pollutants of concern in these discharges are: certain heavy metals; excessive rates of sediment production to stream channels due to anthropogenic activities; petroleum

hydrocarbons from sources such as used motor oil; microbial pathogens of domestic sewage and from illicit discharges, certain pesticides which may be associated with the risk of acute aquatic toxicity; excessive nutrient loads, which cause or contribute to the depletion of dissolved oxygen and/or toxic concentrations of dissolved ammonia; and, other pollutants that may cause aquatic toxicity in the receiving water.

3. The total population of Contra Costa County is approximately 880,000 based on the January 1, 1997 estimate by the State of California Department of Finance. Contra Costa County encompasses approximately 800 square miles. Land use in the county ranges from highly commercial and industrialized areas in the western portion (Rheem Creek watershed) and predominantly open space (Wildcat Creek watershed). In the central portion of the county, (Arroyo del Hambre Creek watershed) land use is predominantly agricultural and open space, and in the south central county, (Sam Ramon and Walnut Creek watersheds), residential uses dominate. There are also a number of other smaller watersheds located throughout the County. Most rainfall in the permit basin occurs in the winter months. This permit regulates a portion of Contra Costa County. The remainder is regulated by the Central Valley Regional Water Quality Control Board.

4. Section 402(p) of the federal Clean Water Act (CWA) requires NPDES permits for stormwater discharges from separate municipal storm drain systems, stormwater discharges associated with industrial activity (including construction activities), and designated stormwater discharges that are considered significant contributors of pollutants to waters of the United States. On November 16, 1990, the United States Environmental Protection Agency (hereinafter US EPA) published regulations (40 CFR Part 122) which prescribe permit application requirements for municipal separate storm drain systems pursuant to Section 402(p) of the CWA.

5. The application requirements that the Regional Board has determined to be applicable to the Dischargers include submittal of a proposed Plan to reduce the discharge of pollutants in stormwater to the maximum extent practicable and to effectively prohibit non-stormwater discharges into municipal storm drain systems and watercourses within the Dischargers' jurisdiction that they own and/or operate.

6. The permit application submitted by the Dischargers includes the Program's Stormwater Management Plan that describes a framework for management of stormwater discharges during the term of this permit. The title page and table of contents are attached to this Order. The Plan describes that Program's goals and objectives, legal authorities, management structure, funding, the annual reporting and program evaluations process, approach to watersheds and monitoring, and Performance Standards. The chapters of the Plan include the following elements:

a. Program Management
b. New Development and Construction Controls
c. Public Information and Industrial Outreach
d. Municipal Maintenance Activities
e. Inspection Activities
f. Illicit Discharge Control Activities
g. Monitoring and Special Studies, and
h. Watershed Management Activities.

Appendix "B1" contains the Program budget for Fiscal Year[1] 1999/2000.

7. The Plan and modifications or revisions to the Plan that are approved in accordance with Provision C.11 and C.12 of this Order, and the Annual Format to be submitted in accordance with the Plan and Provision C.5 of this Order are an integral and enforceable component of this Order.

8. Performance Standards represent the level of effort required of each Discharger in the Plan and have been included in the Plan as best management practices (BMPs). The specification of Performance Standards as BMPs also simplifies the task of determining if a Discharger is putting forth a level of effort which will control pollutants in stormwater discharges to the maximum extent practicable.

9. Each of the Dischargers is individually responsible for adopting and enforcing ordinances, implementing assigned BMPs to prevent or reduce pollutants in stormwater, and providing funds for capital, operation, and maintenance expenditures necessary to implement such BMPs for the storm drain system that it owns and/or operates. Assigned BMPs to be implemented by each Discharger are listed as Performance Standards in the Plan. Enforcement actions concerning this Order will, whenever necessary, be pursued only against the individual Discharger(s) responsible for specific violations of this Order.

10. The Regional Board adopted a revised Water Quality Control Plan for the San Francisco Bay Basin (Basin Plan) on June 21, 1995. This updated and consolidated plan represents the Regional Board's master water quality control planning document. The State Water Resources Control Board and the Office of Administrative Law approved the revised Basin Plan on July 21 and November 13 of 1995, respectively. A summary of the regulatory provisions is contained in Title 23 of the California Code of Regulations at Section 3912. The Basin Plan identifies beneficial uses and water quality objectives for surface waters in the Region, as well as effluent limitations and discharge prohibitions intended to protect those uses. This Order implements the plans, policies, and provisions of the Board's Basin Plan.

11. The Basin Plan lists the following existing beneficial uses that apply (depending on the specific receiving waters) for Central, Lower and South San Francisco Bay,

[1] The fiscal year begins on July 1st and ends on June 30th.

Suisun Bay, San Pablo Bay, their tributary streams and contiguous water bodies within the drainage basin as follows:

* Contact and non-contact Water Recreation
* Wildlife and Estuarine Habitat
* Preservation of Rare and Endangered Species
* Navigation
* Fish Spawning and Migration
* Shellfish Harvesting
* Industrial Service and Process Supply
* Groundwater Recharge
* Commercial and Sport Fishing
* Municipal Water Supply
* Warm and Cold Fresh Water Habitat
* Fresh Water Replenishment

12. The Regional Board considers stormwater discharges from the urban and developing areas in the San Francisco Bay Region, including Contra Costa County, to be significant sources of pollutants. Furthermore, the Region Board finds that there is a reasonable potential that municipal stormwater discharges are causing or contributing to an excursion above water quality standards for: a) copper, nickel, mercury, chlordane, DDT, dieldrin, diazinon, dioxin, and PCBs into Central San Francisco Bay, Carquinez Strait, San Pablo Bay, Sacramento San Joaquin Delta; and b) diazinon into Mt. Diablo Creek, Pine Creek, Pinole Creek, Rodeo Creek, San Pablo Creek, Wildcat Creek, and Walnut Creek.

13. It is not feasible at this time to establish numeric effluent limitations for pollutants in municipal stormwater discharges. Instead, the Provisions of this permit require implementation of BMPs to control and abate the discharge of pollutants in stormwater discharges.

14. The San Francisco Estuary Project, established pursuant to CWA Section 320, culminated in June of 1993 with completion of its Comprehensive Conservation and Management Plan (CCMP) for the preservation, restoration, and enhancement of the San Francisco Bay-Delta Estuary. The CCMP includes recommended actions in the areas of aquatic resources, wildlife, wetlands, water use, pollution prevention and reduction, dredging and waterway modification, land use, public involvement and education, and research and monitoring. Recommended action which may, in part, be addressed through implementation of the Dischargers' Plan include, but are not limited to, the following:

    - Action PO-2.1: Pursue a mass emission strategy to reduce pollutant discharges into the Estuary from point and non-point sources and to address the accumulation of pollutants in estuarine organisms and sediments.

- Action PO-2.4: Improve the management and control of urban runoff from public and private sources.

- Action PO-2.5: Develop BMPs to reduce pollutant loading from energy and transportation activities.

- Action LU-1.1: Local General Plans should incorporate watershed protection plans to protect wetlands and stream environments and reduce pollutants in runoff.

- Action LU 3.1: Prepare and implement Watershed Management Plans that include the complementary elements: 1) wetlands protection; 2) stream environment protection; and 3) reduction of pollutants in runoff.

- Action LU-3.2: Develop and implement guidelines for site planning and BMPs.

15. It is the Regional Board's intent that this Order shall ensure attainment of applicable water quality objectives and protection of beneficial uses of receiving waters. This Order, therefore, includes requirements to the effect that discharges shall not cause or contribute to violations of water quality objectives nor shall they cause certain conditions to occur which create a condition of nuisance or water quality impairment in receiving waters. Accordingly, the Regional Board is requiring that these requirements be addressed through the implementation of BMPs to reduce pollutants in stormwater as provided in Provisions C.1 through C.14 of this Order.

16. The Regional Board considers the Plan to be equivalent to a watershed management plan for the urbanized portions of Contra Costa County, as the Plan outlines effective and efficient implementation of appropriate BMPs for the most important sources of pollutants within the watersheds. In addition, this Order will phase in additions to the Dischargers' stormwater pollution prevention activities that will address excessive rates of sediment production to stream channels by conducting a creek inventory in Contra Costa County.

17. Federal, state, regional or local, entities within the Dischargers' boundaries, not currently named in this Order, operate storm drain facilities and/or discharge stormwater to the storm drains and watercourses covered by this Order. The Dischargers may lack legal jurisdiction over these entities under the state and federal constitutions. Consequently, the Regional Board recognizes that the Dischargers should not be held responsible for such facilities and/or discharges. The Regional Board's Executive Officer entered into an agreement with the City/County Association of Governments in the June 1994 that the Regional Board staff will take the lead in regulating the quality of stormwater runoff from the following: 1) Publicly Owned Treatment Works, 2) Municipal Landfills, and 3) the San Francisco International Airport and operations conducted by tenants and users

of this facility. The definition of separate municipal storm drain facilities in the Federal Stormwater Regulations may result in state or regional entities within Contra Costa County, not currently named in this Order, being designated as medium municipalities. Caltrans is a state agency that is currently designated as such an entity. The Regional Board issued a separate NPDES stormwater permit, No. CAS029998, to Caltrans in August 1994, and will consider issuing separate NPDES stormwater permits to other federal, state or regional entities within the District's boundaries that may not be subject to direct regulation by the Discharger. The State Board is considering issuing Caltrans a Statewide permit that will rescind all regional permits. Federal agencies are not subject to municipal stormwater requirements although they may be permitted as industrial Dischargers.

18. The action to adopt a NPDES permit is exempt from the provisions of the California Environmental Quality Act (Division 13 of the Public Resources Code, Chapter 3, Section 21100, et. seq.) in accordance with Section 13389 of the California Water Code.

19. The Regional Board will notify interested agencies and persons of the availability of reports, plans, and schedules, including Annual Reports, Work Plans, Performance Standards, and the Plan, and will provide them with an opportunity for a public hearing and/or opportunity to submit written views and recommendations. The Regional Board will consider all comments and may modify the reports, plans, or schedules or may modify this Order in accordance with the NPDES permit regulations. All submittals required by this Order conditioned with acceptance by the Executive Officer will be subject to these notifications, comment, and public hearing procedures.

20. The Regional Board has notified the Dischargers and interested agencies and interested persons of its intent to prescribe reissued waste discharge requirements and a reissued NPDES permit for this discharge and has provided them with an opportunity for a public hearing and an opportunity to submit their written views and recommendations.

21. The Regional Board, at a properly noticed public meeting, heard and considered all comments pertaining to the discharge.

22. It is the intention of the Regional Board that this Order supersedes Order No. 93-105.

23. This Order serves as a NPDES permit, pursuant to CWA Section 402, or amendments thereto, and shall become effective ten days after the date of its adoption provided the Regional Administrator, US EPA, Region IX, has no objection.

IT IS HEREBY ORDERED that the Dischargers, in order to meet the provisions contained in Division 7 of the California Water Code and regulations adopted thereunder and the provisions of the Clean Water Act as amended and regulations and guidelines adopted thereunder, shall comply with the following:

A. DISCHARGE PROHIBITIONS

1. The Dischargers shall, within their respective jurisdictions, effectively prohibit the discharge of non-stormwater (materials other than stormwater) into their storm drain systems and watercourses that they own and/or operate. NPDES permitted discharges are exempt from this prohibition. Non-polluted discharges are also exempt from this prohibition. Some examples of non-polluted discharges are landscape irrigation runoff that is not polluted with silt, fertilizer, herbicides or pesticides, non-polluted groundwater pumped discharge and once-through non-contact cooling water which has no chlorine residual. Compliance with this prohibition shall be demonstrated in accordance with Provision C.10 of this Order. Provision C.10 describes a tiered categorization of non-stormwater discharges based on potential for pollutant content.

2. The discharge of stormwater from a facility or activity that causes or contributes to a violation of Receiving Water Limitations is prohibited.

B. RECEIVING WATER LIMITATIONS

1. The discharge shall not cause the following conditions to create a condition of nuisance or to adversely affect beneficial uses of waters of the State:

   a. Floating, suspended, or deposited macroscopic matter, or foam;

   b. Bottom deposits or aquatic growths;

   c. Alterations of temperature, sediment load, nutrient load, dissolved oxygen which cause significant adverse impacts to native aquatic biota;

   d. Visible, floating, suspended, or deposited oil or products of petroleum origin, and/or

   e. Substances present in concentrations or quantities which cause deleterious effects on aquatic biota, wildlife, or waterfowl, or which render any of these unfit for human consumption.

2. The Discharge shall not cause or contribute to a violation of any applicable water quality standard for receiving waters contained in the California Ocean Plan or the Regional Board's Basin Plan. If different applicable water quality standards are

adopted after the date of adoption of this Order, the Board may revise and modify this Order as appropriate.

C. PROVISIONS

1. The Dischargers shall comply with Discharge Prohibition A.2 and Receiving Water Limitations B.1 and B.2 through the timely implementation of control measures and other actions to reduce pollutants in the discharge in accordance with the Plan and other requirements of this permit including any modifications or amendments developed pursuant to this Order. The Plan shall be designed to achieve compliance with Receiving Water Limitations B.1 and B.2. If exceedance(s) of water quality standards or water quality objectives (collectively WQSs) persist notwithstanding implementation of Plan, a Discharger shall assure compliance with Discharge Prohibitions and A.2 and Receiving Water Limitations B.1 and B.2 by complying with the following procedure:

   - Upon a determination by either the Discharger(s) or the Regional Board that discharges are causing or contributing to an exceedance of an applicable WQS, the Discharger(s) shall promptly notify and thereafter submit a report to the Regional Board that describes BMPs that are currently being implemented and additional BMPs that will be implemented to prevent or reduce any pollutants that are causing or contributing to the exceedance of WQSs. The report may be incorporated in the annual update to the Plan unless the Regional Board directs an earlier submittal. The report shall include an implementation schedule. The Regional Board may require modifications to the report;

   - Submit any modifications to the report required by the Regional Board within 30 days of notification;

   - Within 30 days following approval of the report described above by the Regional Board, the Dischargers shall revise that Plan and monitoring program to incorporate the approved modified control measures that have been and will be implemented, the implementation schedule, and any additional monitoring required;

   - Implement the revised Plan and monitoring program in accordance with the approved schedule.

   So long as Dischargers have complied with the procedures set forth above and are implementing the revised Plan, they do not have to repeat the same procedure for continuing or recurring exceedances of the same WQS unless directed by the Regional Board to develop additional control measures.

2. In accordance with Provision C.1 and Finding 12, the Dischargers shall submit a technical report acceptable to the Regional Board Executive Officer on exeedances

of WQSs for copper, nickel, mercury, chlordane, DDT, dieldrin, PCBs, dioxin, and diazinon. A draft scope of work, report outline, and budget for the report(s) shall be submitted by November 1, 1999. An interim draft report shall be submitted by April 1, 2000, and a final report shall be submitted by September 1, 2000. The reports shall include, but need not be limited to, the following:

a) Identification of potential sources for pollutants of concern that are found in stormwater discharges;

b) Evaluation of effectiveness of BMPs that are currently being implemented and additional BMPs that will be implemented to prevent or reduce the above listed pollutants that are causing or contributing to the exceedance of WQSs;

c) Characterization of representative drainage areas and stormwater discharges, including land-use characteristics, pollutant concentrations and forms; and loadings; and

d) A pollution prevention and control measures plan for pollutants listed above that is acceptable to the Executive Officer, which assigns responsibilities and establishes time schedules to implement pollutant reduction and control measures beginning no later than July 1, 2001. Upon approval by the Executive Officer, the revised control measures plan shall be incorporated into the Stormwater Management Plan.

3. **Stormwater Management Plan**: The Dischargers shall implement BMPs referred to as Performance Standards in the Plan, to reduce pollutants in stormwater discharges to the maximum extent practicable. The Plan shall serve as the framework for identification, assignment, and implementation of BMPs. The Dischargers shall begin implementing forthwith the Plan and shall subsequently demonstrate its effectiveness and provide for necessary and appropriate revisions, modifications, and improvements to reduce pollutants in stormwater discharges to the maximum extent practicable and as required by Provisions C.1 through C.14 of this Order.

4. **Performance Standards**: The Plan incorporates Performance Standards developed by the Dischargers. Performance Standards also referred to as BMPs, are intended to define the level of implementation necessary to demonstrate the reduction of pollutants in stormwater to the maximum extent practicable. Through a continuous improvement process, the dischargers will modify and improve current performance standards, as needed, to achieve reduction of pollutants in stormwater to the maximum extent practicable.

5. **Annual Reports**: The Dischargers shall submit an Annual Report, by September 1, of each year, documenting the status of the Program's and the Dischargers' activities during the previous fiscal year, including the results of a qualitative field level assessment of activities implemented by the Dischargers, and the performance of tasks contained in the Plan. The Annual Report shall include a compilation of deliverables and milestones completed as described in the Plan. In each Annual Report, the Dischargers may propose pertinent updates, improvements, or revisions to the Plan, which shall be complied with under this Order unless disapproved by the Executive Officer or acted upon in accordance with Provision C.11. As part of the Annual Report preparation process, each of the Dischargers shall conduct an overall evaluation of the effectiveness of its applicable activities described in the Plan. Direct and indirect measures of effectiveness may include, but are not limited to, conformance with established Performance Standards, quantitative monitoring to assess the effectiveness of BMPs, measurements of estimates of pollutant load reductions, detailed accounting of Program accomplishments, funds expended, and staff hours utilized. Methods to improve effectiveness in the implementation of tasks and activities, including development of new, or modifications of existing Performance Standards shall be identified where appropriate.

6. The Dischargers shall submit an annual report format by April 1 of each year for the annual report due on September 1, each year. The annual report format for Program agencies shall contain work plans for all deliverables due by September 1 each year. The Executive Officer may also require Discharger-specific work plans from any Discharger who appears to need a more methodical method of planning for, and implementing the Performance Standards and other requirements of this Order. The work plans shall consider the status of implementation of current year activities and actions of the Dischargers, problems encountered, and proposed solutions, and shall address any comments received from the Executive Officer on the previous year's Annual Report. The annual report format shall also include clearly defined tasks, responsibilities, and schedule for implementation of Program actions for the annual report due each September 1. The annual report format should also contain, a discussion of the development of new, or modifications of existing BMPs or Performance Standards.

7. The Program's annual report format shall be deemed to be final and incorporated into the Plan and enforceable under this Order as of July 1 of each year unless determined to be unacceptable by the Executive Officer. The Dischargers shall address any comments or conditions of acceptability received from the Executive Officer on the Program's annual report format, prior to the submission of their Annual Report on September 1 of each year, or at an earlier date if so specified by the Executive Officer, at which time the annual report format shall be deemed to be incorporated into the Plan and this Order, unless disapproved of by the Executive Officer.

8. **Monitoring Program**: The Dischargers shall submit, by September 1 of each year, an annual Monitoring Program Plan acceptable to the Executive Officer that supports the development and implementation and demonstrates the effectiveness of their Plan. The Monitoring Program Plan shall be designed to achieve the following objectives:

- Characterization of representative drainage areas and stormwater discharges, including land-use characteristics, pollutant concentrations, and mass loading;
- Assessment of existing or potential adverse impacts on beneficial uses caused by pollutants of concern in stormwater discharges, including an evaluation of representative receiving waters;
- Identification of potential sources of pollutants of concern found in stormwater discharges; and
- Evaluation of effectiveness of representative stormwater pollution prevention or control measures.

The Monitoring Program Plan shall include the following:

a. Provision for conducting and reporting the results of special studies conducted by the Dischargers which are designed to determine effectiveness of BMPs or control measures, define a Performance Standard or assess the adverse impacts of a pollutant or pollutants on beneficial uses.

b. Provisions for conducting watershed monitoring activities including: identification of major sources of pollutants of concern; evaluation of the effectiveness of control measures and BMPs; and use of physical, chemical and biological parameters and indicators as appropriate.

c. Identification and justification of representative sampling locations, frequencies and methods, suite of pollutants to be analyzed, analytical methods, and quality assurance procedures. Alternative monitoring methods in place of these (special projects, financial participation in regional, state, or national special projects or research, literature review, visual observations, use of indicator parameters, recognition and reliance on special studies conducted by other programs, etc.) may be proposed with justification. Alternative monitoring methods may include participation in Bay Area Stormwater Management Agencies Association's Monitoring Program or Projects. The Dischargers shall prepare a plan and conduct a Contra Costa County creek inventory as follows:

- All of the Dischargers shall develop jointly and submit by September1, 1999 a technical report acceptable to the Executive Officer, on existing creek inventory efforts and a plan to complete the creek inventory project.

- The Dischargers shall submit by September 1, 2000 a complete creek inventory and characterization report acceptable to the Executive. The report shall include environmental indicators as well as other relevant parameters of the creeks.

9. Contra Costa County, the City of Orinda, and the Town of Moraga , shall submit by September 1, 1999, a final report acceptable to the Executive Officer containing an evaluation of the management plan implemented to reduce adverse stormwater runoff discharge impacts to the drinking water quality of San Pablo and Upper San Leandro reservoirs owned and operated by East Bay Municipal Utility District.

10. a. **Non-Stormwater Discharges (Exempted Discharges):** In carrying out Discharge Prohibitions A.1 and A. 2 of this Order, the following non-stormwater discharges are not prohibited unless they are identified by the Discharger or the Executive Officer as sources of pollutants to receiving waters:

    - flows from riparian habitats or wetlands;
    - diverted stream flows;
    - springs;
    - rising groundwater; and
    - Uncontaminated groundwater infiltration.

    If any of the above categories of discharges, or sources of such discharges, are identified as sources of pollutants to receiving waters, then such categories or sources shall be addressed as conditionally exempted discharges in accordance with Provision C.10.b.

    b. **Conditionally Exempted Discharges:** The following non-stormwater discharges are not prohibited if they are either identified by the Discharger or the Executive Officer as not being sources of pollutants to receiving waters or if appropriate control measures to minimize the adverse impacts of such sources are developed and implemented under the Stormwater Management Plan in accordance with Provision C.10.c:

    - uncontaminated pumped groundwater;
    - foundation drains;
    - water from crawl space pumps;
    - footing drains;
    - air conditioning condensate;
    - irrigation water;
    - landscape irrigation;
    - lawn or garden watering;
    - planned and unplanned discharges from potable water sources;
    - water line and hydrant flushing;

- individual residential car washing; and
- discharges or flows from emergency fire fighting activities;
- dechlorinated swimming pool discharges.

c. The Dischargers shall identify and describe the categories of discharges listed in C.10.b which they wish to exempt from Prohibition A.1 in periodic submissions to the Executive Officer. For each such category, the Dischargers shall identify and describe as necessary and appropriate to the category either documentation that the discharges are not sources of pollutants to receiving waters or circumstances in which they are not found to be sources of pollutants to receiving waters. Otherwise, the Dischargers shall describe control measures to reduce pollutants that will eliminate the adverse impacts of such sources, procedures and Performance Standards for their implementation, procedures for notifying the Regional Board of these discharges, and procedures for monitoring and record management. Such submissions shall be deemed to be incorporated into the Plan unless disapproved by the Executive Officer or acted on in accordance with Provision C.11 and the NPDES permit regulations.

d. Permit Authorization for Exempted Discharges

i. Discharges of non-stormwater from sources owned or operated by the Dischargers are authorized and permitted by this Order, if they are in accordance with the conditions of this provision and the Plan.

ii. The Board may require dischargers of non-stormwater other than the Dischargers to apply for and obtain coverage under an NPDES permit and comply with the control measures developed by the Dischargers pursuant to Provision C.10. Non-stormwater discharges that are in compliance with such control measures may be accepted by the Dischargers and are not subject to Prohibition A.1.

iii. The Dischargers may propose, as part of their annual updates to the Plan under Provision C.5 of this Order, additional categories of non-stormwater discharges to be included in the exemption to Discharge Prohibition A.1. Such proposals are subject to approval only by modification of this permit.

11. It is anticipated that the Plan may need to be modified, revised, or amended from time to time to respond to changed conditions and to incorporate more effective approaches to pollutant control. Requests for changes may be initiated by the Executive Officer or by the Dischargers. Minor changes may be made with the Executive Officer's approval and will be brought to the Regional Board as information items and the Dischargers and interested parties will be notified accordingly. If proposed changes imply a major revision of the Plan, the Executive Officer shall bring such changes before the Regional Board as permit amendments and notify the Dischargers and interested parties accordingly.

12. This Order may be modified, or alternatively, revoked or reissued, prior to the expiration date as follows: a) to address significant changed conditions identified in the technical reports required by the Regional Board which were unknown at the time of the issuance of this Order; b) to incorporate applicable requirements of statewide water quality control plans adopted by the State Board or amendments to the Basin Plan approved by the State Water Resources Control Board; or c) to comply with any applicable requirements, guidelines, or regulations issued or approved under Section 402(p) of the CWA, if the requirement, guideline, or regulation so issued or approved contains different conditions or additional requirements not provided for in this Order. The Order as modified or reissued under this paragraph shall also contain any other requirement of the CWA then applicable.

13. Each of the Dischargers shall comply with all parts of the Standard Provisions contained in Appendix "A" of this Order.

14. This Order expires on July 21, 2004. The Dischargers must file a Report of Waste Discharge in accordance with Title 23, California Code of Regulations, not later than 180 days in advance of such date as application for reissuance of waste discharge requirements.

15. Order No. 93-105 is hereby rescinded.

I, Loretta K. Barsamian, Executive Officer, do hereby certify that the foregoing is a full, true, and correct copy of an order adopted by the California Regional Water Quality Control Board, San Francisco Bay Region, on July 21, 1999.

LORETTA K. BARSAMIAN
Executive Officer

APPENDIX A: Standard Provisions
APPENDIX B1: Program Budget for Fiscal Year 1999/2000

ATTACHMENTS: 1 – County Boundary Map
2 – Map Showing Major Surface Water Features
3 – Stormwater Management Plan: Title Page and Table of Contents.

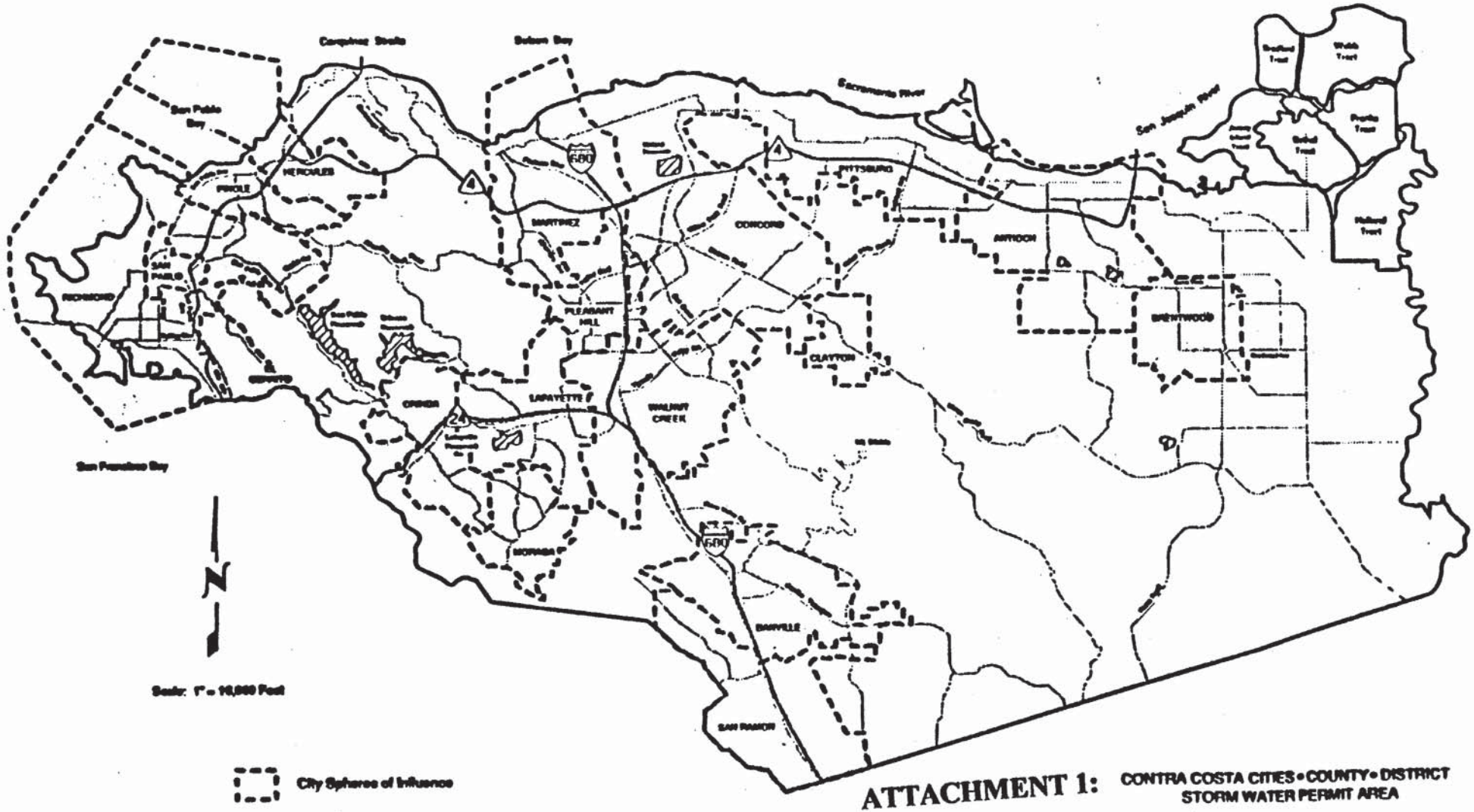

ATTACHMENT 1: CONTRA COSTA CITIES • COUNTY • DISTRICT STORM WATER PERMIT AREA

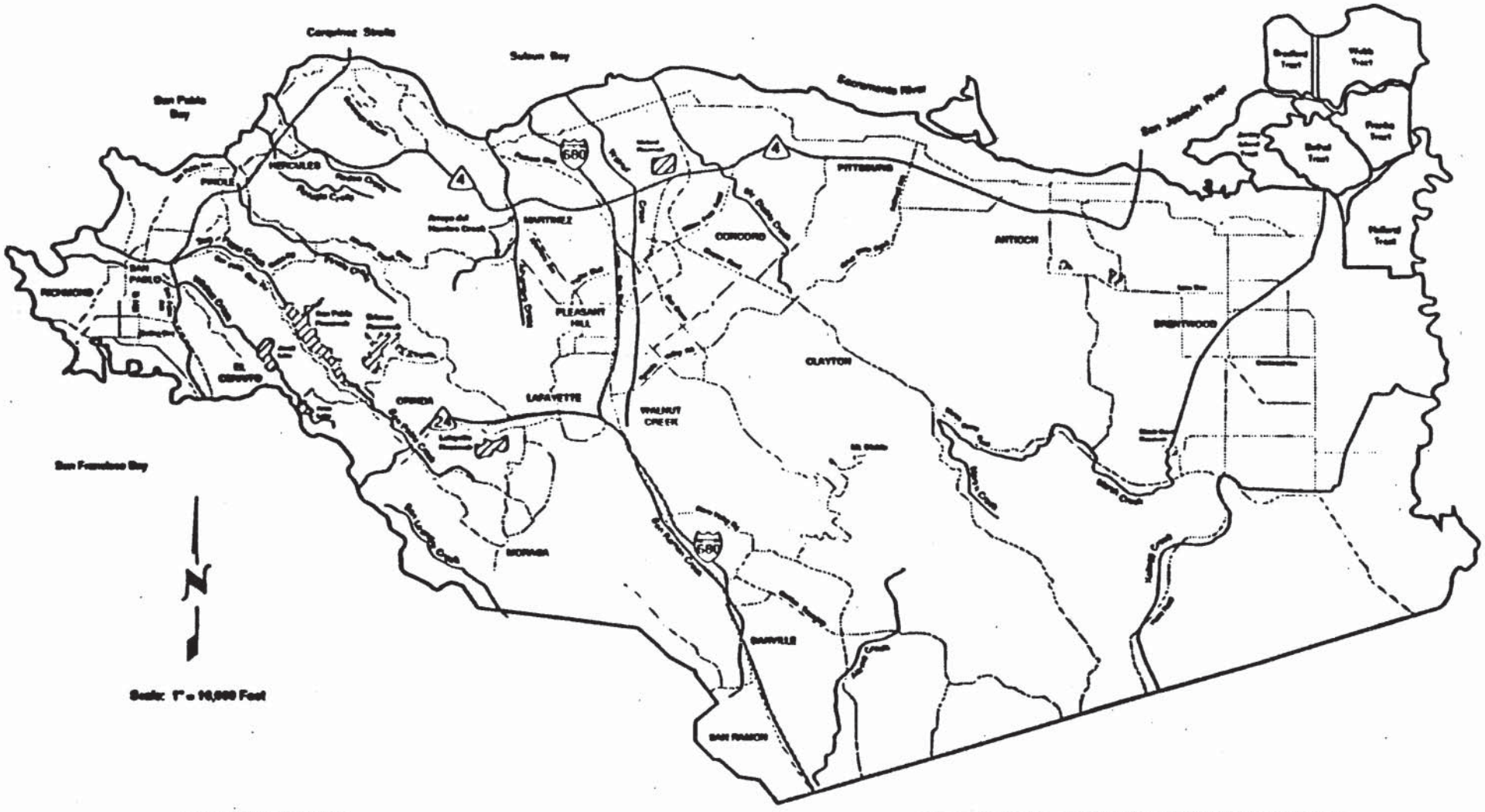

ATTACHMENT 2: MAJOR SURFACE WATER FEATURES-CONTRA COSTA COUNTY

ATTACHMENT 3:

STORMWATER MANAGEMENT PLAN

1999 – 2004

1999

CONTRA COSTA CLEAN WATER PROGRAM

3
NEW DEVELOPMENT AND CONSTRUCTION CONTROLS

GOALS

Modifications of natural drainage systems associated with urbanization (e.g., engineering drainage ways to convey runoff quickly, and increasing impervious surfaces associated with construction of buildings and paved areas for roads and parking lots) may contribute significantly to stormwater pollution. These types of changes lead to increases in the volume, the rate of runoff and the discharge of pollutants. A large portion of the developable land in Contra Costa County is already urbanized. Current growth rates and strong economic conditions exist causing a continuing pressure for more development. Efforts are needed to control the impacts of development and construction projects on environmentally sensitive areas and local water bodies.

The primary goal of the New Development and Construction Controls component of the SWMP is to minimize adverse water quality impacts associated with development activities. Development and implementation of uniform standards will protect water quality and its beneficial uses[1]. Specific objectives to meet this goal include the following:

- Prohibit non-stormwater discharges from construction sites, and reduce stormwater pollutant discharges from development and construction activities to the maximum extent practicable;

[1] "Beneficial use" is defined as those uses allowing the highest water quality consistent with maximum benefit to the people of California, including uses for recreation, preservation and enhancement of fish and wildlife use, agricultural supply, industrial service process supply, municipal and domestic supply, groundwater recharge, navigation, and ocean commercial and sport fishing. For a more detailed description, see: San Francisco Bay Regional Water Quality Control Board's *Water Quality Control Plan* (1995 *Basin Plan*), 1995 (Chapter II).

- Provide guidance to agencies on cost-effective stormwater quality controls for new and re-development projects, and communicate the information to developers, owner/builders, and contractors;

- Incorporate stormwater quality controls – including good planning practices to minimize increases in impervious cover – into development plan review and permitting, and gain internal acceptance and support for these policies;

- Require compliance with new development and construction site best management practices (BMPs);

- Promote implementation of performance standards for new development and construction control activities; and,

- Continually track, evaluate and improve efforts to control stormwater quality and beneficial use impacts of development. Evaluate local agency policies and practices, changes in public awareness and effectiveness of specific control measures; and use the results of these evaluations to improve related future activities.

PROGRAM ACCOMPLISHMENTS

New Development and Construction Controls Committee

Since its inception in 1992, the New Development and Construction Controls Committee comprised representatives from agencies and the development community. Working cooperatively, these representatives assisted in the

development and implementation of the Program's New Development and Construction Controls component of the SWMP.

The Program's strategy has been to integrate procedures for stormwater pollution prevention and control into existing agency review and inspection programs and to coordinate with new development programs being implemented as part of other Bay Area stormwater programs. The Program provides guidance to the local agency programs through its New Development and Construction Controls Committee. The committee meets monthly and has been a valuable means of communication and information sharing between agencies in the Program as well as with other BASMAA member agencies. Following is a summary of the Program's significant accomplishments:

Training, Education & Outreach

Beginning in 1993, the committee has conducted annual educational workshops for municipal planners, engineers, and inspectors. Workshop topics have addressed the State's General Construction Activity NPDES permit and municipal NPDES permit requirements, the San Francisco Bay Regional Water Quality Control Board's Staff Recommendations; construction site erosion and sediment controls, construction site pollution prevention measures, construction site field inspections, and site planning and design guidance for new developments. The committee has also participated with BASMAA to develop and implement a regional construction education program.

The committee developed or adapted several educational/informational outreach materials for developers and contractors. For example, the committee

adapted a series of eight brochures on BMPs for construction activities for agencies to hand out at planning and building department counters. The committee also assisted BASMAA in adapting the "Blueprint for a Clean Bay" booklet into a regional document to be used by all BASMAA member agencies. As part of this effort, the committee assisted in the development of a Bay Area "Recycler and Disposal Services for Construction Sites" list, which helps contractors properly dispose of construction wastes and to facilitate recycling of usable materials. In addition, the committee adapted a construction site pollution prevention plan sheet containing construction site best management practices. Agencies attached this plan sheet to approved plans and permits.

Representatives of the committee worked with BASMAA's New Development Committee to develop guidance document entitled *"Start at the Source": Residential Site Planning and Design Guidance Manual for Stormwater Quality Protection.* This document is being used by agencies to educate agency staff and the development community about ways to mitigate stormwater impacts of development through proper site design. Several committee members are currently preparing an expanded "Start at the Source" manual, which will contain guidance for commercial/industrial developments.

Model Grading Ordinance

A key task during the development of our New Development and Construction Controls component was the development of a Model Grading Ordinance. The Model Grading Ordinance requires erosion and sediment control plans be prepared in accordance with the Association of Bay Area Governments' 1995 Manual of Standards for Erosion and Sediment Control Measures and the

California Storm Water Best Management Practice Handbook for Construction Activity.

Guidelines for New Development

The committee prepared recommended New Development Guidelines containing stormwater quality controls for all new development, including multi-family residential development and commercial/industrial development. The committee also provided guidance on alternative funding sources and maintenance responsibilities for implementing treatment controls in new developments.

Development Plan Review and Approval Procedures

The committee developed several tools to assist agencies' efforts to review and revise, if necessary, their development plan review and approval procedures, such as:

- Revised CEQA initial study checklist – A revised CEQA checklist was developed for planners during the development plan review process to identify potential significant impacts to stormwater quality. This checklist is updated periodically.

- Model Conditions of Approval – Model conditions of approval were developed requiring applicants to show proof of coverage under the State's Construction Activity General Permit; and, to implement and maintain

minimum construction site stormwater quality control measures. The minimum control measures vary based upon the size of the project.

- Planning Tools Binder – A binder titled "Planning Tools for Addressing Impacts to Stormwater from Construction and New Development Activities" was compiled and distributed to agencies and to BASMAA's New Development Committee. The binder contains materials and information (e.g., general plan policies, ordinances, conditions of approval, etc). developed by regulatory agencies, stormwater programs, agencies, and consultants. The purpose of the binder is to provide agencies with example "planning tools" for addressing stormwater quality during the development plan review and approval process. This binder is updated periodically.

- Documentation of Test Cases – Several new development projects are being tracked through the plan review and approval process in order to identify practical, effective methods for mitigating stormwater quality impacts of development; to compile information on alternative methods for integrating stormwater quality considerations into existing project review and approval procedures; and, to identify potential conflicts and solutions for coordinating stormwater quality requirements with existing building standards and codes, and other agencies' requirements.

Response to Construction Related Erosion Problems

The Program has responded proactively with SFBRWQCB staff to address the construction-related erosion control problems observed throughout the Bay Area over the last couple of years. Significant progress has been made in

addressing these problems through improved communication and coordination between Regional Board staff and agency representatives. Aggressive outreach and enforcement activities have also contributed to improved erosion control efforts. The Program continues to work cooperatively with Regional Board staff.

Local Efforts

In general, agencies have made substantial progress incorporating stormwater pollution prevention requirements into their development plan review and construction site inspection procedures, and are continuing to review and improve their programs. During the term of the first NPDES permit, agencies' new development activities focused on:

- Adoption of stormwater discharge and erosion control ordinances;
- Development and implementation of construction site BMPs;
- Incorporation of stormwater pollution prevention measures into development plan reviews and construction inspections; and,
- Implementation of the Regional Board Staff's *Recommendations*.

Agencies have reported they are requiring construction BMPs as permit conditions for some or all projects; and, requiring copies of "Notices of Intent" (NOIs) and Stormwater Pollution Prevention Plans (SWPPPs) for projects required to be covered under the State's General Construction Activity Storm Water Permit.

3
NEW DEVELOPMENT AND CONSTRUCTION CONTROLS

PLANNED PROGRAM ACTIVITIES

The following program activities will be conducted during the next five years.

Implement and Improve Performance Standards

Each of the agencies will implement the performance standards for control of stormwater pollutants from new development and construction activities as part of its compliance with the countywide stormwater NPDES permit. The New Development and Construction Controls Committee will review the performance standards annually and make any needed improvements. These improvements will be based on implementation experience, the measured effectiveness of the controls, and future guidance from Regional Board staff, BASMAA, and other groups as available.

Assist with Implementing Stormwater Quality Controls

- Increase Knowledge and Use of Appropriate Controls - The Program will track the implementation of stormwater controls in public and private projects. Tracking will primarily be conducted through discussion of municipal "case studies" at New Development and Construction Controls Committee meetings. The Committee will also continue to investigate and inform agencies about the effectiveness of individual structural controls (e.g., grass swales, inlet filters, etc.) and recommend BMP special studies to the Monitoring and Inspection Committee.

- Control Discharges from Construction-Related Activities - The Program will support agencies' efforts to control pollutant discharges (including sediment) from construction sites, as described in the performance standards. The Program will also support outreach efforts to developers and contractors, including review and possible update of the Construction Activity BMPs brochures. In addition, the New Development and Construction Controls Committee will also track and inform agencies about changes to the State Board's General Construction Activity Stormwater NPDES Permit, which is scheduled for reissuance in 1999.

- Promote Outreach - The objectives of this activity are to continue and expand existing outreach programs and to prepare and distribute appropriate educational materials. Initial outreach efforts have focused on education of municipal planners and engineers through monthly meetings and annual workshops. These efforts will continue to ensure that stormwater quality controls are addressed during the planning and design phase for both private and public projects. The Program will conduct at least one workshop (or its equivalent) for agency staff each year.

  Additional outreach is needed for educating contractors, developers and owner/builders, and elected officials such as Planning Commissions and City Councils. The committee will discuss methods for reaching these target audiences, and conduct at least one outreach effort or event each year for one or more of these groups. The Committee may coordinate its outreach to developers and contractors with efforts by BASMAA (e.g., the regional construction education program) and Regional Board staff (e.g., erosion control certification program).

Outreach activities also include preparation and distribution of educational materials to promote awareness of appropriate stormwater controls and other issues of importance to the Committee. Outreach pieces will be designed based on the target audience and intended use, with assistance and review by the Public Education and Industrial Outreach Committee to ensure materials are consistent and user-friendly.

Assess the Effectiveness of Implemented Controls

There are three main areas in which the effectiveness of agency programs will be assessed:

- Implementation of the performance standards;
- Enforcement of construction site BMPs, as documented in inspection reports (for sites inspected per the Performance Standards), notices of violation, and other documents; and,
- Requirements for appropriate stormwater controls for both private and public development projects, as demonstrated in conditions of approval, project plans and specifications, or other documents.

The New Development and Construction Controls Committee will develop methods for measuring effectiveness in these areas. This may include tracking new development case studies, using special reporting or inspection forms, or other means. Additionally, the Committee will continue to investigate the

effectiveness of individual structural controls and recommend BMP special studies to the Monitoring and Inspection Committee.

Assist with Regulatory Compliance and Planning

The Program will conduct the following activities:

- Assist agencies to comply with the reporting and other requirements of the NPDES permit, track local program progress, and prepare the new development section of the Program's Annual Report;

- Continue to assist the New Development and Construction Controls Committee to conduct meetings and other activities; and,

- Develop a detailed work plan and schedule for Committee activities each fiscal year.

Agencies will be responsible for participating in the Committee as appropriate (see performance standards) and providing sufficient information on their local programs for the Annual Report.

G:\word\...\NPDES\ADMIN\Permt.97\NDCCNarrative.doc

3
NEW DEVELOPMENT AND CONSTRUCTION CONTROLS

PERFORMANCE STANDARDS

TABLE 3-1
NEW DEVELOPMENT AND CONSTRUCTION CONTROLS
PERFORMANCE STANDARDS

DESCRIPTION	99/00	00/01	01/02	02/03	03/04
MEASURES AND POLICIES TO CONTROL THE QUALITY OF STORMWATER RUNOFF					
NDCC-1: Each agency will have adequate legal authority and will provide ongoing review of existing legal authorities provided in erosion control and stormwater management and discharge control ordinances to determine the ability to implement General Plan policies and authorize discretionary review of development projects. If necessary, the agency will amend existing ordinance(s) or develop and adopt new ordinances.	✓	✓	✓	✓	✓
NDCC-2: Each agency will incorporate policies and implementation measures when its General Plan is amended to help preserve and enhance water quality and protect sensitive areas[1]. Ordinances should be considered prior to General Plan Amendments.	✓	✓	✓	✓	✓
NDCC-3: All agencies will implement programs based on Regional Board's Staff Recommendations to the maximum extent practicable. Such programs are intended to achieve a similar or higher standard for protection of water quality including habitat protection in sensitive areas. All agencies must demonstrate alternative programs if municipalities disagree with the Regional Board's Staff Recommendations.	●	✓	✓	✓	✓
NDCC-4: All agencies will continue to improve performance standards within the permit period in response to upcoming Regional Board's Staff Recommendations and other relevant technical information to the maximum extent practicable.	●	✓	✓	✓	✓

[1] See Definitions – Attachment "B"

● Commence BMP Implementation

✓ Implemented and in Effect

TABLE 3-1
NEW DEVELOPMENT AND CONSTRUCTION CONTROLS
PERFORMANCE STANDARDS

DESCRIPTION	99/00	00/01	01/02	02/03	03/04
DEVELOPMENT PLAN REVIEW AND PERMITTING					
NDCC-5: Each agency will evaluate the effect of development on stormwater runoff and wetlands in the California Environmental Quality Act (CEQA) process (e.g., use a revised checklist).	✓	✓	✓	✓	✓
NDCD-6: Each agency will require stormwater quality control measures during and after construction of municipal capital improvement projects, as appropriate. Each agency will also incorporate appropriate control measures in project documents, such as plans and contract specifications.	✓	✓	✓	✓	✓
NDCC-7: Each agency will require developers and owner/builders to control stormwater quality impacts of their projects using appropriate best management practices (BMPs). Appropriate BMPs shall be implemented by developers at all project sites during construction. Developers of projects with significant stormwater pollution potential[1] will also be required to mitigate impacts through site planning or design practices and/or installing stormwater treatment controls. See Attachment "A" for a list of resource documents.	✓	✓	✓	✓	✓
NDCC-8: Each agency will incorporate the Contra Costa Clean Water Program's model development conditions of approval into its standards for development to the maximum extent practicable.	✓	✓	✓	✓	✓
NDCC-9: Each agency will require developers and owner/builders of projects that include permanent structural stormwater controls to ensure ongoing operation and maintenance of such controls as part of project approval documents, as appropriate.	✓	✓	✓	✓	✓

[1] S Definitions – Attachment "B"

● Commence BMP Im nentation

✓ Implemented and in Effe

TABLE 3-1
NEW DEVELOPMENT AND CONSTRUCTION CONTROLS
PERFORMANCE STANDARDS

DESCRIPTION	99/00	00/01	01/02	02/03	03/04
NDCC-10: Each agency will develop and implement appropriate design guidelines and practices (e.g., BASMAA's "Start at the Source" document), which incorporate water quality protection measures for both public and private projects. Development of these guidelines will occur in Fiscal Year 1998/99; and, implementation will occur in each succeeding fiscal year.	✓	✓	✓	✓	✓
NDCC-11: Each agency will require private and public development projects to include permanent stormwater quality controls, as appropriate, if sufficient site planning measures are not implemented or feasible.	✓	✓	✓	✓	✓
EROSION AND SEDIMENT CONTROL					
NDCC-12: Each agency will maintain an erosion control program that includes requirements for minimum BMPs, sufficient enforcement authority, training and tools for inspectors, and information for developers and contractors.	✓	✓	✓	✓	✓
NDCC-13: Prior to construction of any project needing permits, proof of coverage (General Construction Activity Storm Water Permit promulgated by the State Water Resources Control Board, Army Corps 404 Permit, Regional Water Quality Control Board's 401 Water Quality Certification, etc.) will be required. Each agency will require developers to prepare, submit to the agency for review and approval, and implement an effective erosion and sediment control plan or similar administrative document that contains erosion and sediment control provisions during the construction period.	✓	✓	✓	✓	✓

[1] See Definitions – Attachment "B"

● Commence BMP Implementation

✓ Implemented and in Effect

TABLE 3-1
NEW DEVELOPMENT AND CONSTRUCTION CONTROLS
PERFORMANCE STANDARDS

DESCRIPTION	99/00	00/01	01/02	02/03	03/04
CONSTRUCTION SITE FIELD INSPECTIONS					
NDCC-14: Each agency will inspect construction sites for adequacy of stormwater quality control measures on a regular basis. The frequency of inspections will be based on considerations such as the size of the project, its potential impact on stormwater quality, and the amount of construction activity.	✓	✓	✓	✓	✓
NDCC-15: For construction sites requiring erosion and/or sediment control plans, each agency will inspect sites prior to the beginning of the wet season[1] each year to ensure measures will be taken to prevent erosion and minimize discharges of sediment from disturbed areas. All agencies will submit documentation by October 15 of each year that all sites issued grading permits have been inspected by September 30 for compliance with erosion control best management practices.	✓	✓	✓	✓	✓
NDCC-16: Inspectors will review the Storm Water Pollution Prevention Plan, if applicable, prior to conducting the inspections.	✓	✓	✓	✓	✓
NDCC-17: During inspections, inspectors will: **A.** Inspect and prohibit non-stormwater discharges to the maximum extent practicable, except those discharges that contain no pollutants. **B.** Whenever possible, visually observe the quality of stormwater runoff during and after a major storm event. **C.** Require proper implementation and maintenance of erosion control and materials/waste management BMPs (e.g., covering stockpiled materials, and designating work and storage areas) to minimize the discharge of pollutants.	✓	✓	✓	✓	✓

[1] S]efinitions – Attachment "B"

● Commence BMP Imr' 'entation

✓Implemented and in Effec'

TABLE 3-1
NEW DEVELOPMENT AND CONSTRUCTION CONTROLS
PERFORMANCE STANDARDS

DESCRIPTION	99/00	00/01	01/02	02/03	03/04
NDCC-18: If appropriate, inspectors will require problems be corrected and will document illicit discharges[1] (or contact their Illicit Discharge Coordinator) so that illicit discharges are reported in the Annual Report.	✓	✓	✓	✓	✓
NDCC-19: For construction sites requiring erosion control plans, each agency will ensure a self-inspection program by the developer is implemented or will inspect all priority construction sites within 7 days following each significant storm event[1] or series of events during the wet season[1] of each year to evaluate the effectiveness of erosion and sediment control measures, and if necessary, require additional erosion protection measures be implemented.	✓	✓	✓	✓	✓
COORDINATION WITH THE CONTRA COSTA COUNTY FLOOD CONTROL & WATER CONSERVATION DISTRICT (FCD)					
NDCC-20: The New Development & Construction Controls Committee, on behalf of all co-permittees, will continue discussing with the FCD policies regarding the operation and maintenance of new flood control facilities to maximize stormwater quality control benefits.	✓	✓	✓	✓	✓
NDCC-21: Each agency will study and, if appropriate, implement operation and maintenance procedures for new flood control facilities which maximize stormwater quality controls. The studies shall initiate in Fiscal Year 2000/01; and, implementation will occur in each succeeding fiscal year.	●	✓	✓	✓	✓

[1] See Definitions – Attachment "B"

● Commence BMP Implementation

✓ Implemented and in Effect

TABLE 3-1
NEW DEVELOPMENT AND CONSTRUCTION CONTROLS
PERFORMANCE STANDARDS

DESCRIPTION	99/00	00/01	01/02	02/03	03/04
EDUCATION ACTIVITIES					
NDCC-22: Each agency will provide educational materials (BMP flyers, "Blueprint for a Clean Bay", "Start at the Source", construction site BMP plan sheet, etc.) to municipal staff, developers, contractors, construction site operators, and owner/builders, as appropriate.	✓	✓	✓	✓	✓
NDCC-23: Each agency will educate its staff responsible for development plan review and permitting of stormwater quality issues and controls.	✓	✓	✓	✓	✓
NDCC-24: Each agency will educate construction site inspectors on the proper implementation and maintenance of erosion and sediment controls and materials/waste management BMPs.	✓	✓	✓	✓	✓
COMMITTEE MEETINGS AND WORKSHOPS					
NDCC-25: At least one or more representative from each agency will attend CCCWP New Development and Construction Controls workshops.	✓	✓	✓	✓	✓
NDCC-26: In addition to the agency representative assigned to the CCCWP, each agency will designate a person responsible for implementing the New Development and Construction Controls component of the SWMP and for acting as a liaison with the New Development & Construction Controls Committee.	✓	✓	✓	✓	✓

[1] S Definitions – Attachment "B" ● Commence BMP Im entation ✓Implemented and in Effe

3
NEW DEVELOPMENT AND CONSTRUCTION SITE CONTROLS

ATTACHMENT A – RESOURCE DOCUMENTS

There are a number of guidance materials that agencies are using to identify and select appropriate BMPs. These include:

- The Regional Board *Staff Recommendations;*
- The *California Storm Water Best Management Practice Handbooks;*
- The *Bay Area Preamble to the California Storm Water Best Management Handbooks;*
- The Association of Bay Area Government's *Manual of Standards for Erosion and Sediment Control Measures;*
- The publication *Blueprint for a Clean Bay* (construction BMPs);
- A series of seven Construction BMP Flyers developed by the New Development & Construction Controls Committee; and
- Model "Conditions of Approval" developed by the New Development & Construction Controls Committee; and
- The BASMAA document *Start at the Source: Residential Site Planning and Design Guidance Manual for Stormwater Quality Protection*; and,
- Erosion and Sediment Control Field Manual by the California Regional Water Quality Control Board, San Francisco Bay Region.

Other applicable guidance materials will be used, as they become available.

3
NEW DEVELOPMENT AND CONSTRUCTION SITE CONTROLS

ATTACHMENT B - DEFINITIONS

Sensitive Area - Any area in which plant or animal life or their habitats are rare or especially valuable, including any area in the following category:

1. habitats containing or supporting "rare and endangered" species as defined by the State Fish and Game Commission;
2. perennial and intermittent streams and their tributaries that support aquatic habitat;
3. riparian corridors
4. lakes, ponds, and adjacent shore habitat
5. wetlands, marshes, and coastal tide lands
6. coastal and offshore areas containing breeding or nesting sites or used by migratory and resident water-associated birds for resting areas and feeding;
7. areas used for scientific study and research concerning fish and wildlife;
8. existing game and wildlife refuges and reserves; and
9. sand dunes and sea cliffs.

Projects with significant stormwater pollution potential - A project which causes substantial or potentially substantial adverse change in the quantity and/or quality of stormwater runoff generated from the site. (Note: This is consistent with the CEQA definition of significance. Professional judgement will be required in evaluation of project impacts, until specific thresholds for significance have been adopted.) A project which is constructed in a "sensitive area" (see definition above) and/or is five acres or greater in disturbed area will be considered to have significant stormwater pollution potential.

Wet Season - October 15 to April 15 of each year or as defined by local ordinance.

Illicit Discharge – Any non-stormwater discharge to a storm drain or watercourse, except for those discharges allowed under the Program's NPDES permit.

3
NEW DEVELOPMENT AND CONSTRUCTION SITE CONTROLS

Significant Storm Event – Rainfall resulting in 0.25 inches or more in depth within a 24 hour period.

Redevelopment – To develop again, or to restore to a better and/or new condition.

Appendix C
Construction General Permit
Inspection No. 1

Storm Water Inspection Report		
Permittee: O Brien Group	WDID No. **2 07C334573**	Date: 11/10/2009
Facility: Belmont Terrace	Industrial Type: Construction	Receiving Water:
Facility Address: 4640 Pacheco Boulevard, Contra Costa County, California		
Persons present: John Ineson (Superintendent, O Brien Homes)		
Facility Representative(s)/Title(s): John Ineson (Superintendent, O Brien Homes)	Inspector(s): Jared Richardson (PG Environmental, LLC)	

Inspection Findings

The PG Environmental, LLC inspector held a closing conference at the conclusion of the inspection. During the closing conference, the inspector reviewed the preliminary inspection findings with the Facility Representatives. Pursuant to all provisions of the California State Water Resources Control Board (SWRCB) Order No. 99-08-DWQ, National Pollution Discharge Elimination System (NPDES), General Permit No. CAS000002 for Discharges of Storm Water Runoff Associated with Construction Activity (the Permit), the findings listed below must be corrected.

Records Review

All dischargers shall develop and implement a Storm Water Pollution Prevention Plan (SWPPP) as required by Special Provision C.2 of the Permit. The discharger shall amend the SWPPP whenever there is a change in construction or operations which may affect the discharge of pollutants to surface waters, ground waters, or a municipal separate storm sewer system (MS4), as required by Section A.4.a of the Permit. The SWPPP shall also be amended if the discharger violates any condition of the Permit or has not achieved the general objective of reducing or eliminating pollutants in storm water discharges.

1. A copy of the Storm Water Pollution Prevention Plan (SWPPP) was retained onsite. The SWPPP was reviewed during the inspection and found to be inadequate for the following reasons:

    a. The SWPPP did not include a list of names of all contractors (or subcontractors), their specific areas of responsibility, telephone numbers, addresses, and emergency contact numbers; as required by Section A.13 of the Permit. Specifically, the SWPPP did list several contractors (or subcontractors) (e.g., MJB Pipeline, Stevens Creek Quarry); however, specific areas of responsibility, telephone numbers, addresses, and emergency contact numbers were not contained in the SWPPP. The SWPPP must be updated to include this information.

    b. The SWPPP did not include the runoff coefficient before and after construction activity at the site as required by Section A.5.c(3) of the Permit: The SWPPP must be updated to include this information.

    c. The SWPPP did not include and describe all calculations for anticipated storm water run-on and associated BMPs implemented to divert offsite drainage around or through the construction project, as required by Section A.5.b(1) of the Permit. Specifically, a concrete v-ditch had been implemented upgradient of the site to divert storm water run-on around the project (see attached Photograph 1). The SWPPP must be updated to include this information.

    d. The SWPPP did not include a construction activity schedule and proposed timeframe for all major activities (e.g., mass grading, paving, lot or parcel improvements) as required by Section A.5.c(5) of the Permit. The SWPPP must be updated to include this information.

    e. The Site Map did not clearly identify the storm water collection and discharge location(s) where storm water from the construction site discharges to a municipal separate storm sewer system (MS4) or water body as required by Section A.5.a.2(a) of the Permit. Specifically, the Site Map did not clearly identify the storm water collection and discharge points located across Pacheco Boulevard. The Site Map must be updated to clearly identify the storm water collection and discharge location(s) from the construction site, and must reflect current

facility conditions.

f. The Site Map did not identify the location(s) of all post-construction BMPs as required by Section A.5.b(6) of the Permit. Specifically, the Site Map did not identify the numerous bio-swales implemented on-site. The Site Map must be updated to clearly identify the post-construction BMPs, and must reflect current facility conditions.

g. The Site Map did not clearly identify the drainage patterns across the project area, including relevant areas outside of the site perimeter as required by Section A.5.a(2)(b) of the Permit. Specifically, the drainage patterns for the project area located across Pacheco Boulevard were not identified. The Site Map must be updated to clearly identify the drainage patterns across the site, and must reflect current facility conditions.

h. The Site Map did not clearly identify the discharge location(s) where storm water from the construction site discharges to a municipal separate storm sewer system (MS4) or water body as required by Section A.5.a(2)(a) of the Permit. The Site Map must be updated to clearly identify the storm water discharge location(s) from the construction site, and must reflect current facility conditions.

i. The SWPPP did not clearly describe all BMPs which will be implemented at the facility to divert off-site drainage around or through the construction project (e.g., brow ditch, diversion ditch, other run-on controls) as required by Section A.5.b(1) of the Permit. For example, a concrete v-ditch was implemented upgradient of the site to divert off-site storm water run-on around the construction project (see attached Photograph 1); however, these practices were not identified in the SWPPP. The SWPPP must be updated to include this information.

j. The SWPPP did not include a description of the post-construction BMPs for the project including the agency or parties responsible for long-term maintenance as required by Section A.5.b(6) and Section A.10 of the Permit. Post-construction BMPs consist of permanent features designed to minimize pollutant discharges, including sediment from the site after construction has been completed. Specifically, Mr. John Ineson (Superintendent, O Brien Homes) stated that numerous bio-swales had been implemented on-site for storm water runoff; however, these bio-swales were not described in the SWPPP. The SWPPP must be updated to include this information.

2. Inspection records were available and were reviewed during the inspection; however, inspections were not conducted as required by Section A.11 of the Permit. Specifically, the inspection checklist used to document inspections did not include the minimum information as follows: (1) best estimate of beginning of storm event, and (2) the best estimate of time elapsed since last storm event. It should also be noted that the inspection records did not document any BMP corrective action dates on inspection records 10/12/2009 and 10/14/2009. Inspections must be conducted and documented in accordance with Section A.11 and Section B.3 of the Permit.

Inspections must be conducted at least once before and after storm events and once every 24-hour period during extended storm events. In addition, one time discharges of non-storm water must be inspected when such discharges occur. For more detailed information on the required inspection frequency and documentation see Section A.11 and Section B.3 of the Permit.

Facility Inspection

All Best Management Practices (BMPs) mentioned in the following findings must be selected, installed, implemented and maintained according to Best Available Technology Economically Achievable (BAT) and Best Conventional Pollutant Control Technology (BCT) to reduce or eliminate pollutants in storm water discharges as required by Special Provision C.2 of the Permit.

The discharger must implement an effective combination of erosion and sediment controls on all disturbed areas and at appropriate locations along the site perimeter and at all operational storm drain inlets at all times during the rainy season as required by Section A.6 and Section A.8 of the Permit.

3. It was observed during the inspection that adequate BMPs were not implemented to prevent the transport of sediment from Lot 45 areas of disturbance to Court H roadway. Specifically, the vehicle tracking control pad was not large enough to prevent the transport of sediment to Court H roadway, and sediment and debris accumulation was visible in Court H roadway just upgradient of a storm drain inlet (see attached Photographs 2 and 3). As a result, there was a release of sediment to Court H roadway. Adequate BMPs must be implemented to prevent the release of sediment from the areas of disturbance to Court H roadway, and sediment in the street must be removed and disposed of so that it does not re-enter the street.

4. It was observed during the inspection that BMPs were not adequately installed or maintained to prevent discharge of sediment from the areas of disturbance adjacent to Falling Star Drive roadway. The erosion logs implemented at the northeast end of Falling Star Drive and adjacent to the intersections of Falling Star Drive and Courtyard J and Shadow Hill Drive roadways were not installed in accordance with BAT/BCT (see attached Photographs 4 through 7). Specifically, the erosion logs were not properly staked or entrenched in the ground to retain sediment and prevent failure. As a result, there was a potential for discharge of sediment from the areas of disturbance adjacent to Falling Star Drive roadway and subsequently to downgradient storm drain inlets (see attached Photographs 6 and 7). Adequate BMPs must be correctly installed and maintained to prevent discharge of sediment from the areas of disturbance to Falling Star Drive roadway and subsequent storm drain inlets.

5. It was observed during the inspection that BMPs were not adequately inspected and maintained near northeast end of Falling Star Drive roadway. Specifically, the erosion log BMPs were torn and deteriorated just upgradient of a storm drain inlet (see attached Photographs 8 through 10). As a result, there was a potential for the discharge of sediment from this location to the adjacent storm drain inlet. All BMPs implemented on the site must be inspected and maintained in good and effective operating condition .

6. It was observed during the inspection that adequate BMPs were not implemented to prevent the discharge of sediment from an area of disturbance located at the northwest corner of Lot 50. BMPs were not implemented along the flow path and the surface of the adjacent slopes were not stabilized (see attached Photograph 11). In addition, BMPs were not implemented at the western end of the disturbance directly adjacent to the concrete drainage conveyance channel (see attached Photographs 12 and 13). As a result, there was a potential for the discharge of sediment from the area of disturbance to the concrete drainage conveyance channel. Adequate BMPs must be implemented and correctly installed to prevent the discharge of sediment from the area of disturbance to the concrete drainage conveyance channel.

7. It was observed during the inspection that hydraulic fluid / oil had leaked onto the ground from a piece of heavy equipment located in the northern portion of the site (see attached Photographs 14 and 15). As a result, there was a potential for the discharge of pollutants downgradient to and subsequently offsite to the south and east. The hydraulic fluid / oil spill must be cleaned from the ground surface using appropriate remediation methods and all waste must be disposed of properly.

8. It was observed during the inspection that a portable toilet located near the intersection of Falling Star Drive and Courtyard J was not properly secured to prevent it from being knocked over or blown down (see attached Photograph 16). As a result, there was a potential for a chemical and sanitary waste spill from the toilet to the adjacent storm drain inlet (see attached Photograph 16). BMPs must be implemented to properly secure the portable toilet and prevent any potential spill of pollutants from the toilet.

Site Photographs	O Brien Group Belmont Terrace Contra Costa County, California	Photograph date: 11/10/2009

Photograph 1 – Concrete V-ditch located upgradient of construction project. This was implemented to divert storm water run-on to the project.

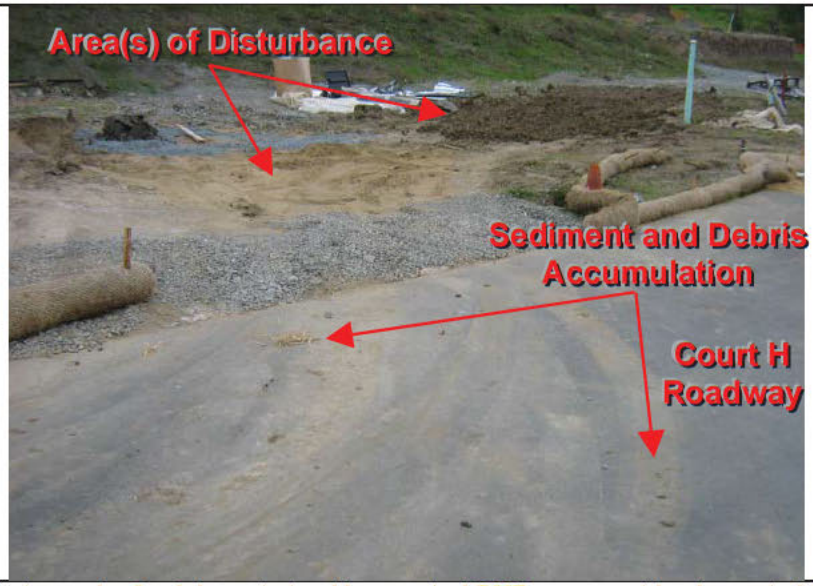

Photographs 2 – Adequate tracking control BMPs were not implemented to prevent transport of sediment from a disturbed area to Court H roadway.

Photograph 3 – Adequate tracking control BMPs were not implemented to prevent transport of sediment to Court H roadway and a storm drain inlet.

Photograph 4 – Erosion log BMPs utilized along Falling Star Drive roadway were not properly installed (e.g., not staked or entrenched).

Site Photographs	O Brien Group Belmont Terrace Contra Costa County, California	Photograph date: 11/10/2009

Photograph 5 – Close-up of Photograph 4 depicting erosion log BMPs not properly installed (e.g., not staked or entrenched) to retain sediment.

Photograph 6 – Erosion log BMPs implemented along Falling Star Drive near intersection with Courtyard J and Shadow Hill Drive not properly installed (e.g., not staked or entrenched).

Photograph 7 – Close-up of Photograph 6 depicting erosion log BMPs not adequately installed adjacent to storm drain inlet.

Photograph 8 – Erosion logs BMPs utilized near the NE end of Falling Star Drive roadway were not adequately maintained (e.g., torn/deteriorated).

Site Photographs	O Brien Group Belmont Terrace Contra Costa County, California	Photograph date: 11/10/2009

Photograph 9 – Close-up view of Photograph 8 depicting erosion log BMPs unmaintained (e.g., deteriorated).

Photograph 10 – Close-up of Photograph 8 depicting erosion log BMPs unmaintained (e.g., torn/deteriorated) upgradient of storm drain inlet.

Photograph 11 – BMPs were not implemented for an area of disturbance at northwest corner of Lot 50.

Photograph 12 – Close-up of concrete drainage conveyance channel shown in Photograph 11.

Site Photographs	O Brien Group Belmont Terrace Contra Costa County, California	Photograph date: 11/10/2009

Photograph 13-BMPs were not implemented to prevent the discharge of sediment from the area of disturbance to concrete conveyance channel.

Photograph 14 – Visible hydraulic fluid / oil spill staining on ground surface below a piece of heavy equipment.

Photograph 15 – Close – up of Photograph 15.

Photograph 16 – Portable toilet was not properly secured from being knocked down or blown over to prevent a chemical and sanitary spill.

Appendix C
Construction General Permit
Inspection No. 2

Storm Water Inspection Report		
Permittee: Shapell Industries Inc., Northern California	WDID No. **2 07C326634**	Date: 11/10/2009
Facility: Gale Ranch Phase III	Industrial Type: Construction	Receiving Water: West & Main Branch of Alamo Creek
Facility Address: 9055 S. Gale Ridge Road; Contra Costa County, California		
Persons present: Steve Savage (Assistant Vice President, Shapell Homes); Stephen Thorpe (Project Management, Shapell Homes)		
Facility Representative(s)/Title(s): Steve Savage (Assistant Vice President, Shapell Homes)	Inspector(s): Jared Richardson (PG Environmental, LLC)	

Inspection Findings

The PG Environmental, LLC inspector held a closing conference at the conclusion of the inspection. During the closing conference, the inspector reviewed the preliminary inspection findings with the Facility Representatives. Pursuant to all provisions of the California State Water Resources Control Board (SWRCB) Order No. 99-08-DWQ, National Pollution Discharge Elimination System (NPDES), General Permit No. CAS000002 for Discharges of Storm Water Runoff Associated with Construction Activity (the Permit), the findings listed below must be corrected.

Records Review

All dischargers shall develop and implement a Storm Water Pollution Prevention Plan (SWPPP) as required by Special Provision C.2 of the Permit. The discharger shall amend the SWPPP whenever there is a change in construction or operations which may affect the discharge of pollutants to surface waters, ground waters, or a municipal separate storm sewer system (MS4), as required by Section A.4.a of the Permit. The SWPPP shall also be amended if the discharger violates any condition of the Permit or has not achieved the general objective of reducing or eliminating pollutants in storm water discharges.

1. A copy of the Permit was not maintained at the construction site as required by Section C.17 of the Permit. A copy of the Permit must be maintained at the construction site during construction activity.

2. A copy of the SWPPP, dated 02/24/2004, was retained onsite. The SWPPP was reviewed during the inspection and found to be inadequate for the following reasons:

    a. The SWPPP did not include: the list of names of all contractors (or subcontractors), their specific areas of responsibility, telephone numbers, addresses, and emergency contact numbers; as required by Section A.13 of the Permit. The SWPPP must be updated to include this information.

    b. The SWPPP did not adequately document all training of person(s) responsible for the preparation (i.e., personnel responsible for preparing, overseeing, revising, and amending), implementation (i.e., personnel responsible for installation, inspection, maintenance, and repair of Best Management Practices (BMPs), and overall Permit compliance of the SWPPP as required by Section A.12 of the Permit. The SWPPP must be updated to include this information.

    c. The Site Map did not clearly identify the construction site perimeter as required by Section A.5.a(2)(a) of the Permit. Specifically, the Site Map did not identify the construction site perimeter in a legend or callout. The Site Map must be updated to clearly identify the construction site perimeter, and must reflect current facility conditions.

    d. The Site Map did not clearly identify the discharge location(s) where storm water from the construction site discharges to a municipal separate storm sewer system (MS4) or water body as required by Section A.5.a(2)(a) of the Permit. The Site Map must be updated to clearly identify the storm water discharge location(s) from the

construction site, and must reflect current facility conditions.

e. The Site Map did not identify the storm water collection and discharge points as required by Section A.5.a(2)(a) of the Permit. Specifically, the Site Map did not identify numerous storm water inlets and their associated discharge points. The Site Map must be updated to clearly identify the storm water collection and discharge points, and must reflect current facility conditions.

f. The Site Map did not identify the general topography both before and after construction activities as required by Section A.5.a(2)(a) of the Permit. Specifically, the Site Map did not clearly identify the existing and proposed contours of the site. The Site Map must be updated to identify the general topography both before and after construction.

g. The Site Map did not clearly identify the drainage patterns into each on-site storm water inlet (e.g., any storm water conveyance) or receiving water as required by Section A.5.b(2) of the Permit. Specifically, the Site Map did not identify the drainage patterns to the storm water inlet draining to water quality pond W – 5. The Site Map must be updated to clearly identify the drainage patterns into each on-site storm water inlet or receiving water, and must reflect current facility conditions.

h. The Site Map did not clearly identify the drainage patterns across the project area, including relevant areas outside of the site perimeter as required by Section A.5.a(2)(b) of the Permit. The Site Map must be updated to clearly identify the drainage patterns across the site/outside site perimeter, and must reflect current facility conditions.

i. The Site Map did not identify areas designated for the (a) storage of soil or waste, (b) vehicle storage and service areas, (c) construction material loading, unloading, and access areas, and (d) equipment storage cleaning, and maintenance areas as required by Section A.5.b(4) of the Permit. Specifically, the Site Map did not identify a soil stockpile (see attached Photograph 8) located off of Nutmeg Park Street south of the intersection with Sunrose Road The Site Map must be updated to include this information, and must reflect current facility conditions.

j. The SWPPP did not clearly describe the time schedule for the implementation of erosion control practices to minimize erosion on disturbed areas of the construction site as required by Section A.6 of the Permit. For example, which controls and maintenance procedures will be implemented during the project phases, which can include: clearing and grubbing, road construction, utility and infrastructure installation, vertical construction, final grading, and final stabilization. The SWPPP must be updated to include this information.

2. Inspection records were available and were reviewed during the inspection, but inspections were not conducted as required in Section A.11 of the Permit. Specifically, the inspection form did not include the minimum inspection information as follows: (1) best estimate of beginning of storm event, and (2) corrective actions required and corrective action dates. Specifically, inspection record 12/01/2008 did not contain this minimum inspection information. Inspections must be documented in accordance with Section A.11 and Section B.3 of the Permit.

Inspections must be conducted at least once before and after storm events and once every 24-hour period during extended storm events. In addition, one time discharges of non-storm water must be inspected when such discharges occur. For more detailed information on the required inspection frequency and documentation see Section A.11 and Section B.3 of the Permit.

Facility Inspection

All Best Management Practices (BMPs) mentioned in the following findings must be selected, installed, implemented and maintained according to Best Available Technology Economically Achievable (BAT) and Best Conventional Pollutant Control Technology (BCT) to reduce or eliminate pollutants in storm water discharges as required by Special Provision C.2 of the

Permit.

The discharger must implement an effective combination of erosion and sediment controls on all disturbed areas and at appropriate locations along the site perimeter and at all operational storm drain inlets at all times during the rainy season as required by Section A.6 and Section A.8 of the Permit.

3. It was observed during the inspection that BMPs were not adequately implemented and maintained to prevent the discharge of sediment to the storm drain inlets located at the intersection of the alley and 7800 Privet Place roadway (see attached Photographs 1 and 2), the storm drain inlet at the northwest corner of Cornflower Street and Cinnamon Ridge Road (see attached Photograph 3), as well as the storm drain inlet at the north corner of Firpointe Street and Sweetviolet Drive (see attached Photographs 4 and 5). Sediment and debris accumulation was visible adjacent to and within the inlets and holes and tears were visible in the inlet filter bags. As a result, there was a potential for the discharge of sediment to the storm drain system and subsequent detention basin. Adequate BMPs must be correctly installed, maintained and inspected to prevent the discharge of sediment to the storm drain inlets and subsequent detention basin.

4. It was observed during the inspection that adequate BMPs were not implemented to prevent the transport of sediment to the Main Branch Road at a location near the intersection with Bayberry View Lane (see attached Photograph 6). Sediment and debris accumulation was visible in the Main Branch Road (see attached Photograph7). Adequate BMPs must be implemented to prevent the release of sediment from the disturbed area to the Main Branch Road and subsequent discharge to a nearby storm drain inlet, and sediment in the street must be removed and disposed of so that it does not re-enter the street.

5. It was observed during the inspection that adequate BMPs were not implemented to prevent the discharge of sediment from soil stockpiles located just south of the intersection of Sunrose Road and Nutmeg Park Street on the west side of Nutmeg Park Street into Nutmeg Park Street. BMPs were not implemented to control water run-on to the stockpile slopes, or to control water run-off from the stockpiles, and no perimeter BMPs were implemented (see attached Photographs 8 and 9). In addition, the soil stockpile was placed on top of a straw wattle BMP which was not properly staked and had been driven over (see attached Photographs 8 and 9). As a result, there was a potential for the discharge of sediment to Nutmeg Park Street and subsequent storm drain system. Adequate BMPs must be implemented to prevent the discharge of sediment into Nutmeg Park Street and subsequent storm drain system.

6. It was observed during the inspection that a 4 to 5 gallon fuel storage tank located on the west side of Nutmeg Park Street near the intersection with Firpointe Street was stored without adequate protection to prevent and contain potential spills from contributing pollutants to storm water runoff and to the adjacent storm drain inlet. Adequate secondary containment was not apparent for the fuel storage tank (see attached Photograph 10). Additionally, adequate perimeter controls had not been implemented (e.g., construction fencing, earthen berm, etc.) to prevent the fuel storage tank from being run into or damaged. As a result, there was a potential for a fuel discharge to storm water runoff and to the adjacent storm drain inlet (see attached Photograph 10). The fuel tank must be properly contained to prevent potential spills from contributing pollutants to the adjacent storm drain inlet, or must be removed from the site and disposed of appropriately.

7. It was observed during the inspection that portable toilets located in the alleyway behind 7800 Privet Place were not properly secured to prevent it from being knocked over or blown down and was placed in the curb and gutter flowline upgradient of a storm drain inlet (see attached Photograph 11). In addition, fluid staining was observed in the curb and gutter flowline behind the portable toilets just upgradient of the storm drain inlet. As a result, there was a potential for a chemical and sanitary waste discharge to the storm drain inlet and subsequent detention basin. The portable toilets must be located appropriately and properly secured to prevent any potential discharge of pollutants from the toilet to the storm drain inlet.

8. It was observed during the inspection that adequate BMPs were not implemented to prevent the transport of sediment to Nutmeg Park Street from areas of disturbance associated with home lot construction between Sunrose Road and

Firpointe Street. The erosion logs utilized at the lot construction entrances were not installed in accordance with specifications and design criteria outlined in the SWPPP. Specifically, the erosion logs were not properly entrenched in the ground, staked or tightly abutting to retain sediment and prevent failure (see attached Photographs 12 and 13). In addition, evidence of the erosion log being driven over was observed. As a result, there was a potential for the transport of sediment to Nutmeg Park Street and subsequent storm drain inlet. All BMPs must be installed according to the specifications and design criteria outlined in the SWPPP.

Site Photographs	Shapell Industries Inc., Northern California Gale Ranch Phase III Contra Costa County, California	Photograph date: 11/10/2009

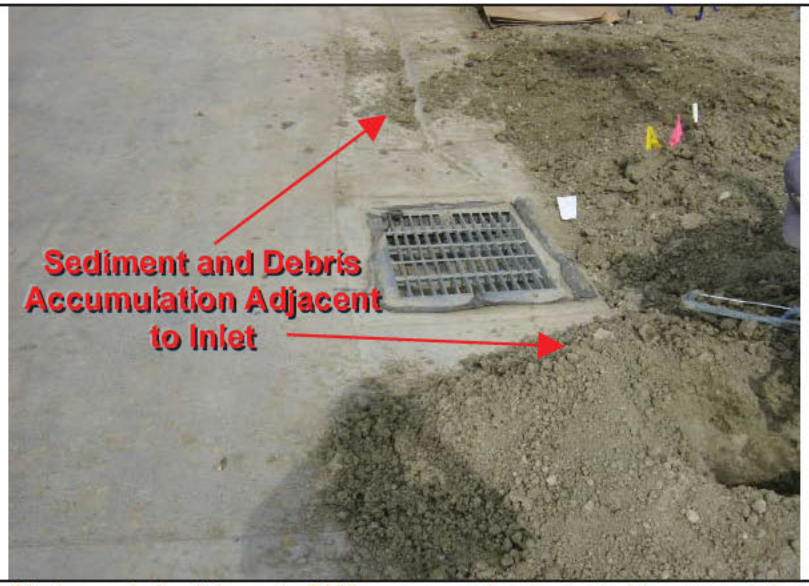

Photograph 1 – Adequate BMPs were not implemented to prevent the discharge of sediment from adjacent unstabilized areas.

Photograph 2 – Photograph looking into the inlet pictured in Photograph 1 with sediment and debris accumulation and holes/tears of inlet filter bag.

Photograph 3 – Gravel bag inlet BMPs were not adequately installed (e.g., located on inlet grate) and were not adequately maintained (e.g., torn bags).

Photograph 4 – Inlet located at Firpointe Street and Sweetviolet Drive.

Site Photographs	Shapell Industries Inc., Northern California Gale Ranch Phase III Contra Costa County, California	Photograph date: 11/10/2009

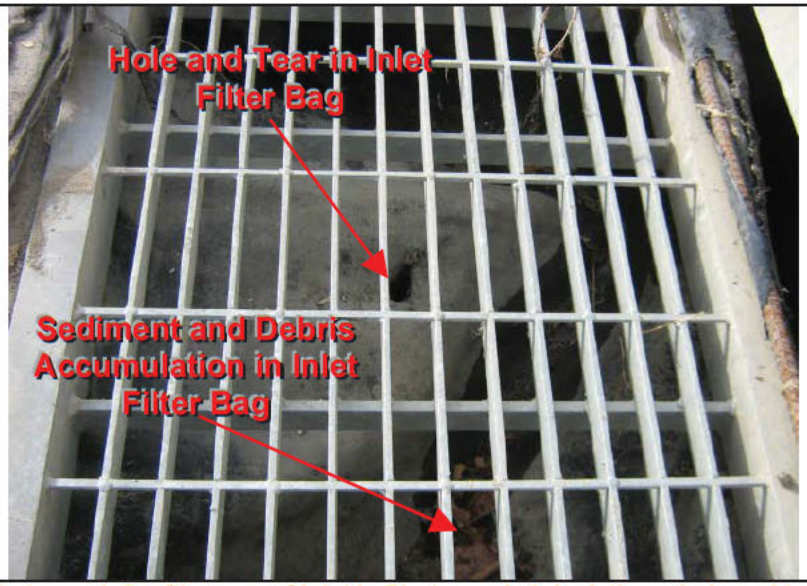

Photograph 5 – Close-up of inlet in Photograph 4 depicting a hole and tear and sediment and debris accumulation in the inlet filter bag.

Photograph 6 – Adequate BMPs were not implemented to prevent the transport of sediment from the area of disturbance to Main Branch Road.

Photograph 7 – Evidence of sediment transport and accumulation to Main Branch Road.

Photograph 8 – Adequate BMPs were not implemented for a soil stockpile located adjacent to Nutmeg Park Street.

Site Photographs	Shapell Industries Inc., Northern California Gale Ranch Phase III Contra Costa County, California	Photograph date: 11/10/2009

Photograph 9 – Adequate BMPs were not implemented for a soil stockpile, and the soil stockpile was placed over an erosion log BMP.

Photograph 10 – Adequate BMPs were not implemented to prevent and contain potential spills from a fuel storage tank to storm drain inlet.

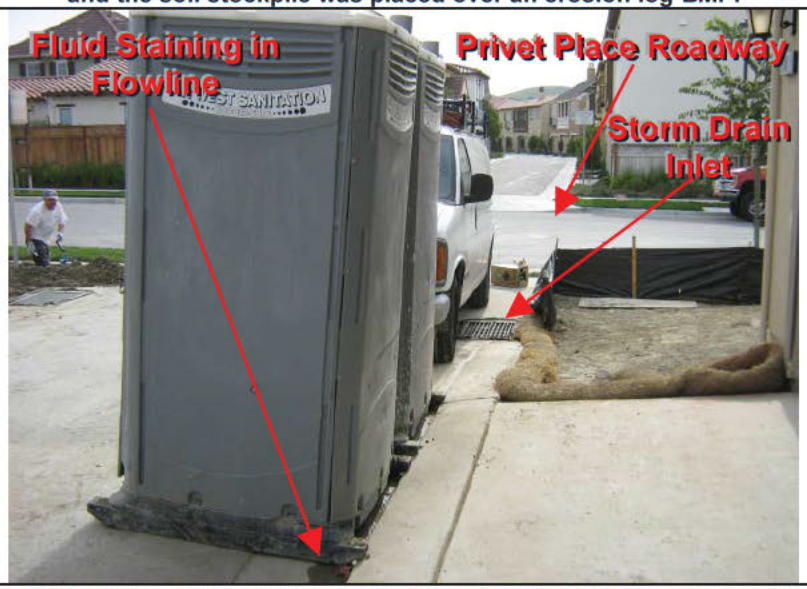

Photograph 11 – Portable toilets were placed in the c&g flowline and were not properly secured from being knocked or blown over.

Photograph 12 – Erosion log BMPs were not adequately installed according to specifications and details outlined in the SWPPP.

Site Photographs	Shapell Industries Inc., Northern California Gale Ranch Phase III Contra Costa County, California	Photograph date: 11/10/2009

Photograph 13 – Erosion log BMPs were not properly staked or tightly abutting to prevent the transport of sediment to Nutmeg Park Street.

Appendix D
Caltrans Fiber Rolls (SC-5) BMP Specifications and Details

Fiber Rolls

SC-5

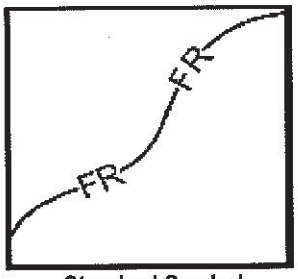

Standard Symbol

BMP Objectives

- ● Soil Stabilization
- ● Sediment Control
- ○ Tracking Control
- ○ Wind Erosion Control
- ○ Non-Storm Water Management
- ○ Materials and Waste Management

Definition and Purpose

A fiber roll consists of wood excelsior, rice or wheat straw, or coconut fibers that is rolled or bound into a tight tubular roll and placed on the toe and face of slopes to intercept runoff, reduce its flow velocity, release the runoff as sheet flow and provide removal of sediment from the runoff. Fiber rolls may also be used for inlet protection and as check dams under certain situations.

Appropriate Applications

- This BMP may be implemented on a project-by-project basis with other BMPs when determined necessary and feasible by the RE.
- Along the toe, top, face, and at grade breaks of exposed and erodible slopes to shorten slope length and spread runoff as sheet flow.
- Below the toe of exposed and erodible slopes.
- Fiber rolls may be used as check dams in unlined ditches if approved by the Resident Engineer (RE) or the District Construction Storm Water Coordinator (refer to SC-4 "Check Dams").
- Fiber rolls may be used for drain inlet protection if approved by the RE or the District Construction Storm Water Coordinator (refer to SC-10 "Storm Drain Inlet Protection").
- Down-slope of exposed soil areas.
- Around temporary stockpiles.
- Along the perimeter of a project.

Limitations

- Runoff and erosion may occur if fiber roll is not adequately trenched in.
- Fiber rolls at the toe of slopes greater than 1:5 may require the use of 500 mm (20" diameter) or installations achieving the same protection (i.e., stacked smaller diameter fiber rolls, etc.).
- Fiber rolls may be used for drainage inlet protection if they can be properly anchored.
- Difficult to move once saturated.
- Fiber rolls could be transported by high flows if not properly staked and trenched in.
- Fiber rolls have limited sediment capture zone.
- Do not use fiber rolls on slopes subject to creep, slumping, or landslide.

Standards and Specifications

Fiber Roll Materials

- Fiber rolls shall be either:

  (1) Prefabricated rolls.

  (2) Rolled tubes of erosion control blanket.

Assembly of Field Rolled Fiber Roll

- Roll length of erosion control blanket into a tube of minimum 200 mm (8 in) diameter.
- Bind roll at each end and every 1.2 m (4 ft) along length of roll with jute-type twine.

Installation

- Slope inclination of 1:4 or flatter: fiber rolls shall be placed on slopes 6.0 m apart.
- Slope inclination of 1:4 to 1:2: fiber rolls shall be placed on slopes 4.5 m apart.
- Slope inclination 1:2 or greater: fiber rolls shall be placed on slopes 3.0 m apart.
- Stake fiber rolls into a 50 to 100 mm (2 to 4 in) trench.

- Drive stakes at the end of each fiber roll and spaced 600 mm (2 ft) apart if Type 2 installation is used (refer to Page 4). Otherwise, space stakes 1.2 m (4 ft) maximum on center if installed as shown on Pages 5 and 6.

- Use wood stakes with a nominal classification of 19 by 19 mm (3/4 by 3/4 in), and minimum length of 600 mm (24 in).

- If more than one fiber roll is placed in a row, the rolls shall be overlapped; not abutted.

Removal

- Fiber rolls are typically left in place.

- If fiber rolls are removed, collect and dispose of sediment accumulation, and fill and compact holes, trenches, depressions or any other ground disturbance to blend with adjacent ground.

Maintenance and Inspection

- Repair or replace split, torn, unraveling, or slumping fiber rolls.

- Inspect fiber rolls when rain is forecast. Perform maintenance as needed or as required by the RE.

- Inspect fiber rolls following rainfall events and a least daily during prolonged rainfall. Perform maintenance as needed or as required by the RE.

- Maintain fiber rolls to provide an adequate sediment holding capacity. Sediment shall be removed when the sediment accumulation reaches three quarters (3/4) of the barrier height. Removed sediment shall be incorporated in the project at locations designated by the RE or disposed of outside the highway right-of-way in conformance with the Standard Specifications.

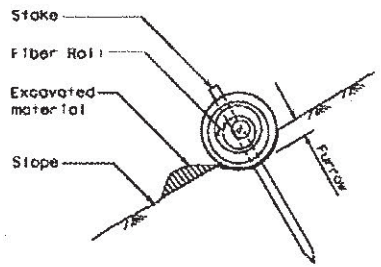

SECTION

TEMPORARY FIBER ROLL (TYPE 1)

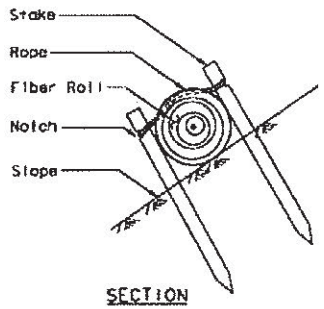

SECTION

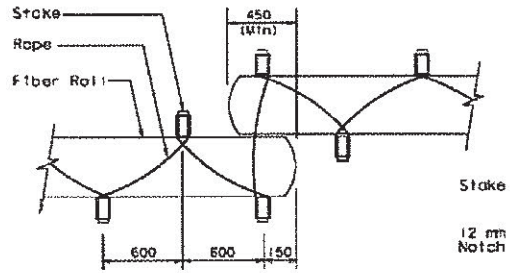

PLAN

TEMPORARY FIBER ROLL (TYPE 2)

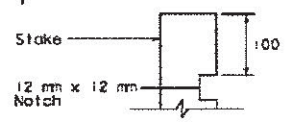

ELEVATION

NOTCH DETAIL

NOTE

1. Temporary fiber roll spacing varies depending upon slope inclination.

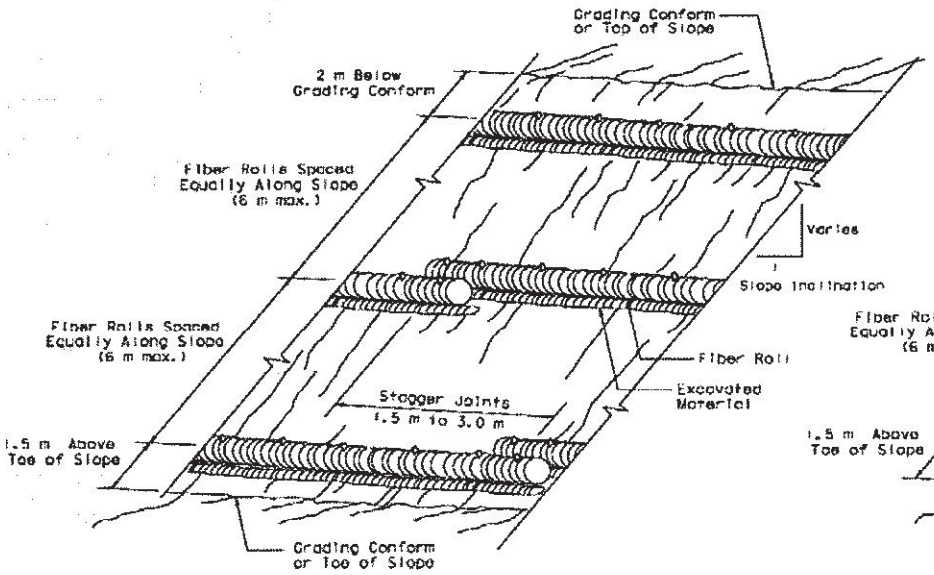

PERSPECTIVE

TEMPORARY FIBER ROLL (TYPE 1)

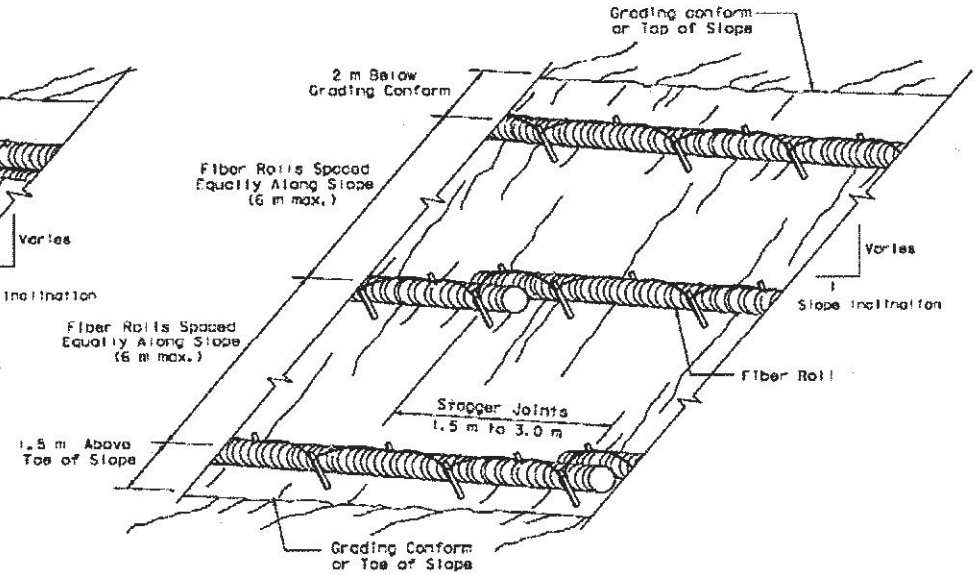

PERSPECTIVE

TEMPORARY FIBER ROLL (TYPE 2)

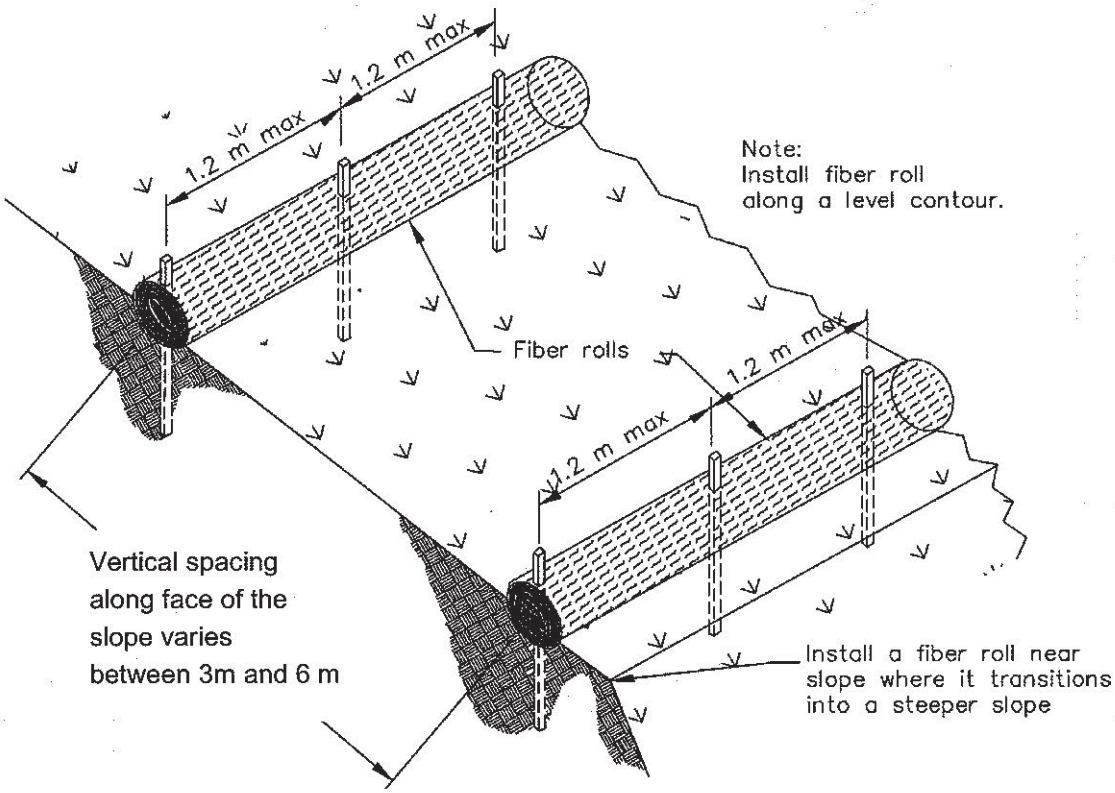

TYPICAL FIBER ROLL INSTALLATION

N.T.S.

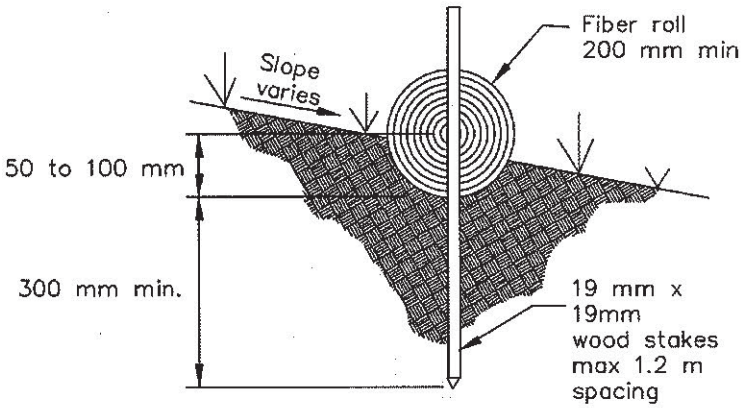

ENTRENCHMENT DETAIL

N.T.S.

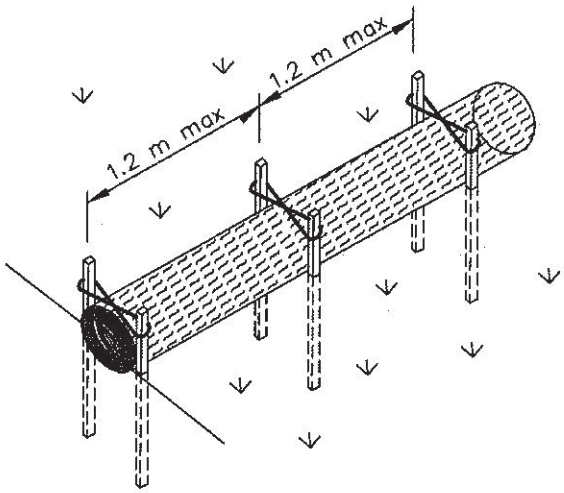

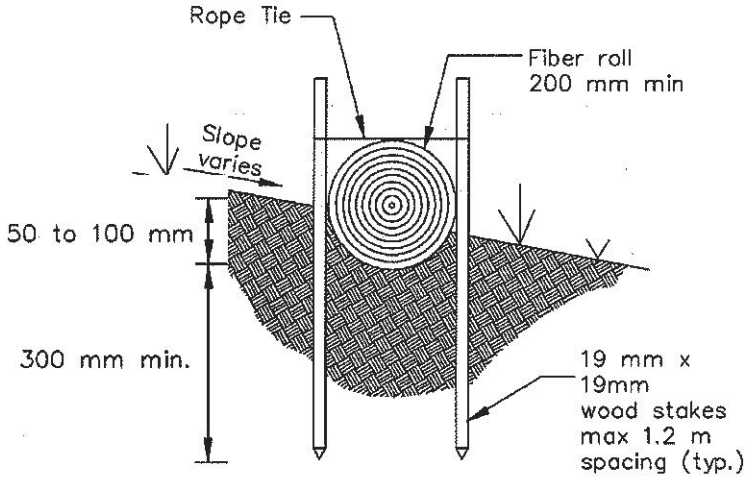

OPTIONAL ENTRENCHMENT DETAIL

N.T.S.

December 10, 2012
CIWQS Place ID 218317(STL)

Emailed to: dtwa@cao.ccounty.us

Mr. David Twa
County Administrator
Contra Costa County
651 Pine Street, 11th Floor
Martinez, California 94553-1275

Subject: Notice of Violation for Failure to Implement Certain Elements of the Municipal Stormwater NPDES Permit No. CAS612008

Dear Mr. Twa:

On May 7-10, May 14, and May 16 and 17, 2012, Water Board staff conducted a compliance inspection of Contra Costa County's Municipal Stormwater Program. This letter is to notify you that based on the findings of that inspection, Contra Costa County (County) has been found to be in violation of some elements of the municipal stormwater permit, NPDES Permit Number CAS612008, Order R2-2009-0074 (MRP).

The County failed to adhere to Provision C.3., which requires the County to ensure that runoff from all new and redevelopment that triggers the requirements flows to treatment systems and that the treatment systems are functional. The County also failed to develop and implement a prioritized plan to inspect all installed stormwater treatment systems, and update its legal authority.

Additionally, the County failed to implement its Enforcement Response Plan and ensure that violations are corrected in a timely manner.

Also, the data in the County's construction site inspection table failed to match the data reported in the County's 2011-2012 Annual Report.

Please refer to the enclosed Compliance Inspection Report for a detailed discussion of the inspection findings, identified violations, identified deficiencies, required corrective actions and recommendations for improving the County's stormwater permit compliance. The County is required to respond in writing to this NOV within 30 days of the date of this letter. The response must include a time schedule for completing the Required Actions in a timely manner.

We thank your staff members for the time they set aside for this Compliance Inspection and their work to implement the MRP. We look forward to your cooperation in this matter. If you have questions, please call Selina Louie at (510) 622-2383 or via email at slouie@waterboards.ca.gov.

Sincerely,

Shin-Roei Lee
2012.12.10
12:23:06 -08'00'

Shin-Roei Lee, Chief
Watershed Management Division

Enclosure – Compliance Inspection Report

cc: Charmaine Bernard, Contra Costa County
Tom Dalziel, Contra Costa County Clean Water Program
Cece Sellgren, Contra Costa County
David Swartz, Contra Costa County

Contra Costa County
Report for Inspection of Municipal Stormwater Management Program
Conducted May 7-10, 14, and 16-17, 2012

1.0 Introduction

1.1 Inspection Purpose

The purpose of the inspection was to determine Contra Costa County's compliance with its Municipal NPDES Permit Order R2-2009-0074.

1.2 Program Areas Evaluated

- New Development and Redevelopment
- Industrial and Commercial Site Controls
- Construction Site Control

Throughout the inspection, preliminary findings were discussed. Water Board staff conducted a wrap up meeting to present preliminary findings on May 17, 2012 with Charmaine Bernard, Mike Carlson, Dan Jordan, Cece Sellgren, and David Swartz of Contra Costa County (County).

1.3 Program Areas Not Reviewed

The following areas were not evaluated as part of the inspection:

- Municipal Operations
- Illicit Discharge Detection and Elimination, with the exception of the Enforcement Response Plan
- Public Information and Outreach
- Trash Load Reduction
- Regional Monitoring Coalition Products and Pollutant of Concern related Products
- Inspection reports, plan review reports, and other relevant files. Water Board staff did not conduct a detailed file review to verify that all elements of the program areas being inspected were being implemented as described. Instead, observations by the Water Board staff, statements by County representatives, and detailed review of select reports and forms were used to assess overall compliance with permit requirements. A detailed file review of specific program areas could be included in subsequent inspections.

1.4 Inspection Attendees

Water Board – Selina Louie and Sue Ma
Nester Baligod, Charmaine Bernard, Mike Carlson, Leigh Chavez, Slava Gospodchikov, Justin Ingram, Dan Jordan, Chris Lau, Neil Leary, Beth Lee, Devra Lewis, Rob Lim, Dante Moabe, Joe Romo, Cece Sellgren, David Swartz, Rob Tavenier, and John Wiggins – Contra Costa County

2.0 Permit Compliance Review

Water Board staff conducted an inspection to assess the County's compliance with the requirements of the MRP for New Development and Redevelopment, Industrial and Commercial Site Controls, and Illicit Discharge Detection and Elimination – Provision C.5.b., and Construction Site Control of the MRP.

Water Board staff identified nine program violations that constitute violations of the requirements of the MRP. These **Violations** are identified within the text of this Report after the pertinent inspection findings along with the **Required Actions** that the County must take to address these identified violations. Four **Deficiencies** are also identified where MRP compliance is less than satisfactory and are identified within the text of this Report after the pertinent inspection findings along with the **Required Actions** that the County must take to address these identified deficiencies. In other instances, **Required Actions** have been

included to ensure adequate implementation of the MRP. Additionally, this Report contains **Recommended Actions** for improvement of the County's Stormwater Management Program.

2.1 New Development and Redevelopment

The inspectors evaluated the County's implementation of Provision C.3.

Findings and Observations

a. C.3. – Legal Authority
The County provided Water Board staff a copy of its legal authority, which was printed on July 12, 2011.

Violation #1: The County failed to update its legal authority to be consistent with the MRP.

The legal authority is missing the four types of special land uses that trigger LID source control, site design, and stormwater treatment for creation or addition of 5,000 square feet or more of impervious surface. The exemptions for LID source control, site design, and stormwater treatment are not consistent with the MRP. Some information in the legal authority is outdated.

Required Action #1: The County shall update its legal authority to be consistent with the MRP, to the extent necessary to effectively regulate projects to the current permit standard (see Recommended Action #1).

Recommended Action #1: The County should just refer to the C.3. requirements in its stormwater permit (i.e. "New Development and Redevelopment requirements in the County's NPDES Permit Number CAS612008") instead of modifying its legal authority each time a new requirement becomes effective in Provision C.3.

Findings and Observations – Interviews

b. Provision C.3. is implemented under two different departments: Conservation and Development, and Public Works.

- Within Conservation and Development the Planning, Building Inspection and Grading Divisions implement Provision C.3.
- Within Public Works, the Engineering Services, Design and Construction, Transportation Engineering, Airports, Capital Projects, County Building and Facilities, and County Watershed Program Divisions implement Provision C.3.

A number of Divisions do very similar tasks to implement Provision C.3. because the path a project takes from planning through occupancy is dependent on the type of project (airport, capital infrastructure, public infrastructure, or subdivision).
David Swartz, County Watershed Program, is the point person for Provision C.3. He assists with Provision C.3. compliance on all types of projects.

c. Subdivisions – Plans for subdivision projects are submitted to Conservation and Development with a preliminary Stormwater Control Plan (SWCP). Project proponents work with Engineering Services in Public Works to get a SWCP that shows understanding of Provision C.3. requirements. Then, applications are deemed complete and go through the Conditions of Approval process. Engineering Services review the plans to ensure adequate sizing. Final SWCPs are produced and include an Operation and Maintenance Plan. Projects are then ready to move into the grading and building phases. The "Flow Chart for Projects Required to Comply with C.3." indicates that inspections are conducted

throughout the installation process. However, in conversations with County staff, this process seems unclear. Property is typically annexed into a Community Facilities District, which allows a special tax to be levied annually to provide funding for the ongoing oversight of the operation and maintenance and administration of the NPDES permit by the County. The Operation and Maintenance Agreement is executed and recorded before the final map is recorded.

Non-Subdivisions – Such projects include malls, industrial projects, and horse boarding facilities. Provision C.3. process is very similar to the Provision C.3. process for subdivisions.

Capital Projects – The Capital Projects Division in Public Works forms a design team to get early input from permitting agency for capital projects such as buildings and other facilities. The SWCP is produced during this process by consultants. Mr. Swartz works with the consultants to produce the SWCP and Operation and Maintenance Plan. The Capital Projects Division manages the project, but Provision C.3. inspections are conducted the County Watershed Program. The County does not have a process for inspecting the treatment units as they are installed. The County's Ground Maintenance Crew implements the Operation and Maintenance Plan. At the time of the Compliance Inspection, one project triggered Provision C.3., West County Health Center, and it was still under construction.

Roads – Transportation Engineering in Public Works determines if projects trigger Provision C.3. and confers with Mr. Swartz to confirm the determination. The Design and Construction team in Public Works takes over the project for design, bidding, and management. The SWCP is produced during this process by consultants. Mr. Swartz reviews the SWCP. The consultant observes as the treatment units are being installed. County Watershed Program develops the Operation and Maintenance Plan, and the Maintenance Crew implements the Operation and Maintenance Plan. Only one road has been built to comply with Provision C.3. and the road is located in Region 5.

Administrative Permit Projects – These are projects that do not need zoning such as a barn in an agriculture district and rebuilding parking lots. The application, submitted to Conservation and Development, must be accompanied by a SWCP, and an Operation and Maintenance Plan. Engineering Services review the plans to ensure adequate sizing. The final SWCP and Operation and Maintenance Plan are produced and permits are issued. While there are no Conditions of Approval, the County can execute a building permit hold to ensure that Provision C.3. is implemented. Property is annexed into a Community Facilities District. The Operation and Maintenance Agreement is executed and recorded.

Airport – The County has two airports, one in Region 2 and one in Region 5. Airport projects fall under three categories: airport projects such as administrative buildings, land use projects appropriate for airports such as hangers and offices, and non-airport use projects such as golf courses, hotels, and other businesses. Airport projects follow the same process as Roads. Land use projects follow the same process as non-subdivisions. And non-airport use projects follow the same process as Administrative Permit Projects. The County Watershed Program conducts the 45-day verification inspections for all projects. No projects have triggered Provision C.3.

d. In our interview with Beth Lee, Airports Division, she was very concerned that the County was implementing Provision C.3. on projects on airport land while other municipalities with airports were not implementing Provision C.3. on projects on airport land. Ms. Lee was at a statewide meeting with other municipalities with airports and learned that other municipalities with airports were not requiring Provision C.3. on projects on airport land. She named the cities of Hayward and Livermore. Water Board staff followed up with both cities regarding their respective implementation of Provision C.3. on projects on airport land and has concluded, based on reviewing submitted documentation and certification statements, that both cities require Provision C.3. The City of Hayward required treatment

on a project completed in 2002. A new Airport Administration Building is under design and has been required to comply with Provision C.3. The City of Livermore has required two separate airport projects to comply with Provision C.3.

e. Water Board staff asked the County for its prioritized plan for inspecting all installed stormwater treatment systems and hydromodification controls pursuant to Provision C.3.h. The County did not have a prioritized plan but staff stated it is inspecting each unit more than once during the permit term.

f. Water Board staff was given a report listing all built regulated projects.
   - For each regulated project, the listing shows the project name and/or file number, party responsible for operation and maintenance, area, type of C.3. facility and succinct summaries of the inspections and re-inspections performed each fiscal year (2009-2010, 2010-2011, and 2011-2012).
   - The report indicates that most of the sites are inspected frequently.
   - The report also indicates self-certification of operation and maintenance activities for a number of sites but it is unclear what is the County's self-certification requirement. And the tabular format shows that the County was inspecting newly installed stormwater treatment systems before the required implementation date of December 1, 2010.
   - The report shows that the County gave a compliance date for violations and follow-up to ensure that violations were corrected.

g. No project has yet triggered the hydromodification requirements.

Deficiency #1: The County failed to have a database or equivalent tabular format of all its Regulated Projects that have installed onsite, joint, and/or offsite stormwater treatment system as required by Provision C.3.h.

The County does have a tabular format listing its stormwater treatment systems but it does not include all of the information required by Provision C.3.h.

Required Action #2: The County shall update its tabular format to include all of the information required by Provision C.3.h.ii.(5).

Violation #2: The County failed to develop a prioritized plan for inspecting all installed stormwater treatment systems and hydromodification controls.

The County does not have a prioritized plan for inspecting all installed stormwater treatment systems and hydromodification controls but staff did state that the County inspects all of its stormwater treatment systems annually. Based on Water Board staff's review of the County's tabular format listing its stormwater treatment systems and inspection notes for the past three fiscal years, it appears that that County does inspect its installed stormwater treatment systems frequently.

Required Action #3: The County shall develop and implement a prioritized plan for inspecting all installed stormwater treatment systems and hydromodification controls.

Findings and Observations from File Review

h. Since the effective dates for Group 1 and Group 2 projects, thirteen projects have been built to comply with C.3. requirements.

i. Water Board staff conducted a file review of Belmont Terrace, California Shakespeare Theater, and El Rincon. The treatment units for these sites have all been installed.
   Belmont Terrace – This 128-home new development is on a rather steep hillside. And this was one of the first projects where the County required C.3. treatment. The run off from this development is

treated in four vegetated swales. At the time of the Compliance Inspection, construction was still ongoing.
California Shakespeare Theater – This is an amphitheater redevelopment project. It has a green roof! The remaining run off is treated with three vegetated swales.
El Rincon – This is a 9 home new development and is treated with two bioretention units.

Water Board staff looked for documentation that the Permittee implemented Provision C.3. and that the municipality implemented its own procedures for Provision C.3. In the case of the County, Water Board staff looked for copies of the initial SWCPs, including engineering drawings; correspondence between County staff and project proponent regarding revisions to the SWCP; revisions to the SWCPs based on County staff's comments; final SWCP, including engineering drawings; signed or adopted Conditions of Approval; documents showing annexation into the Community Facilities District; executed Operation and Maintenance Agreements; inspection forms showing that newly installed stormwater treatment systems were inspected within 45 days of installation to ensure that approved plans have been followed; and engineering drawings showing that all run off will be treated appropriately, and the treatment systems are sized adequately.

Various files and documents for the sites were stored in different places. County staff explained that some of the earlier documents may have already been purged from the files but County staff was very willing to pull additional files and drawings, and locate documents. See Attachment 1 for summary of file review.

Violation #3: The County failed to ensure that all runoff from C.3. projects are treated.

Provision C.3. requires the County to ensure that runoff from all regulated projects are treated in adequately designed treatment measures. For the Belmont Terrace site, the engineering drawing shows that portions of the runoff from both Falling Star Drive and Little Valley Drive do not get treated. Mr. Swartz confirmed this observation out in the field.

Required Action #4: Moving forward, the County shall ensure that all runoff from regulated projects are treated in adequately designed treatment measures and that the treatment measures are functional before accepting the project. If treatment cannot be obtained on-site, alternate or off-site treatment can be employed.

Required Action #5: The County shall develop a template of required information for Operation and Maintenance (O&M) Agreements and ensure that all O&M Agreements have the required information.

The O&M Agreement for El Rincon includes requirement for inspection, frequency of inspection, and documentation of inspections but the O&M Agreement for California Shakespeare Theater does not require any of those items.

The County's tabular format shows self-certification inspections for a number of sites. There is no discussion on the requirements of self-certification inspections in the O&M Agreements for either site.

Required Action #6: The County shall maintain a more complete filing system available for Provision C.3. inspection.

It was challenging to find documents in the files that showed compliance with Provision C.3. because the files were incomplete. County staff keeps some personal files of the final SWCPs, signed and/or

adopted O&M Agreements, and inspection records that are not available in the main files. County staff stated that the paper files get purged as newer versions of documents get submitted and eventually, the files all get archived. When staff leaves, these personal files can get lost. At a minimum, the County's files for each finished project that triggered Provision C.3. need to have the final SWCP with engineering drawings showing what was installed and where it was installed, the document showing that the site was annexed into the Community Facilities District and executed O&M Agreement. These documents should not be archived because they are needed for O&M inspections. Inspection forms and correspondence regarding O&M all need to be filed and available for use.

Required Action #7: The County shall require all O&M Agreements to have engineering drawings and/or maps showing the location of all treatment units.

As property owners, property managers, and County staff change, it is important for the O&M Agreements to have engineering drawing and/or maps showing the location of all treatment units.

Required Action #8: Moving forward, the County shall ensure that under drains for bioretention units are at least two-thirds the width of the bottom of the bioretention units. This can reduce clogging at the interface with the gravel drain layer and provide more area for infiltration.

Findings and Observations – Field Inspections

j. Water Board staff visited El Rincon and Belmont Terrace with Mr. Swartz. It appeared that all the stormwater treatment controls were built according to plans.

2.2 Enforcement Response Plan

Water Board staff evaluated the County's May 2012 Enforcement Response Plan (ERP) for compliance with the MRP for Provisions C.4., C.5., and C.6.

Findings and Observations

k. The County's ERP (1) has a discussion and a flow chart summarizing the enforcement options; (2) has four levels of escalating enforcement with specific field scenarios evoking each level of enforcement (See Attachment 2 for summary of review); and (3) provides guidance on how inspectors should proceed if entry for inspection be denied.
l. The ERP does not discuss escalated enforcement options for repeated Level 1 and 2 types of violations.
m. The discussion for Level 2 says that the County also has the ability to issue Cease and Desist Orders, Stop Work Orders, Orders to Clean and Abate, or Notices to Clean for an illicit discharge that requires correction or abatement but does not assess fines. There is no guidance on when and under what conditions these additional enforcement mechanisms can be employed. And it is unclear if these additional enforcement mechanisms are tiered in Level 2 for progressively stricter responses.
n. The County's 2010-2011 and 2011-2012 Annual Report identifies Stop Work orders as Level 3 enforcement. The discussion for Stop Work orders in the ERP is within the Level 2 section.
o. The discussion and flow chart for Level 2 allows up to 10 days for a site to cease an active non-stormwater discharge.
p. The Level 2 discussion talks about minor and major violations. The flow chart on Page 13 shows that Level 2 enforcement is for minor violations and Level 3 enforcement is for major violations.
q. The discussion for Level 1 states, "The inspector may conduct one of more follow-up inspections to ensure abatement of discharges within a ten (10) business day period…" According to the County's ERP, active discharge falls under Level 2 enforcement.
r. The discussion for Level 1 gives the option of requiring a response from the discharger to confirm that corrective actions have been implemented during a thirty day period. Flow chart shows that follow-up report and inspection occur within 30 days.

The discussions for Level 2 and Level 3 state that minor violations will be subject to timely corrective actions and follow-up inspection within 30 days. Facilities with major violations will be subject to timely corrective actions and follow-up inspection within 10 days. The flow chart shows that discharge needs to be abated before next rain event but no longer than 10 days. Reinspection on the flow chart does not occur until 30 days after a permanent resolution has been implemented.

Required Action #9: In its ERP, the County shall make revisions to:
(1) require immediate abatement of an active non-stormwater pollutant discharge;
(2) assign an enforcement level for repeat violations of the field scenarios in Level 1 and repeat non stormwater pollutant discharges in Level 2;
(3) state which staff position has the authority to issue each level of enforcement;
(4) provide guidance on when and under what conditions Cease and Desist Orders, Stop Work Orders, Orders to Clean and Abate, or Notices to Clean enforcement mechanisms can be employed;
(5) include guidance for failure to report spills, falsification of information, improper signature or certification, and failure to submit required information by due date; and
(6) ensure the discussions and the flow chart are consistent.

Required Action #10: The County shall revise its ERP and Business Inspection Plan to elevate all businesses cited for pollutant exposure, poor housekeeping, or evidence of historical discharge for priority (annual) inspections. Once the businesses are found to be in compliance, the County can place them back on their regular inspection schedule. C.4.b.(3) requires the County to prioritize facilities for inspections.

Recommended Action #2: The County should also revise its ERP and Business Inspection Plan to elevate all businesses cited for stated business practices for priority inspections.

Deficiency #2: The ERP fails to clearly direct County staff to verify that all corrective actions have been implemented in a timely manner, before the next rain event but no longer than 10 business days from the time the violations were first discovered, unless longer time is required with a statement of justification.

The ERP can give County staff the option, under certain scenarios, to allow facilities to self-certify that the implementation of corrective actions has been done in a timely manner. An email or fax with pictures and a signed certification statement could be an option for self-certification of corrective actions. The submittal of the email or fax must demonstrate that compliance was achieved in a timely manner.

Immediate corrections can be temporary and short-term but the County must have procedures in place to verify the implementation of the temporary, short-term corrections, require a timeline for the permanent corrections, and verify the implementation of the permanent corrections.

Required Action #11: The County shall (1) revise its ERP to clearly direct staff to verify that all corrective actions for violations have been implemented in a timely manner, before the next rain event but no longer than 10 business days from the time the violations were first discovered, unless longer time is required with a statement of justification; and (2) update its standard operating procedures for Provisions C.4., C.5., and C.6. inspections to include verification that corrective actions have been implemented in a timely manner and guidance on putting together timelines for implementation of permanent corrective actions.

2.3 Industrial and Commercial Site Controls

Water Board staff evaluated the County's implementation of select components of C.4. – Industrial and Commercial Site Controls of the MRP.

Findings and Observations – Business Inspection Plan

s. We evaluated the County's Business Inspection Plan (BIP) dated April 2011 and the revision dated May 2012. Both versions are very similar.
t. Neither copy of the BIPs included the total number of facilities and a list of industrial and commercial facilities that require inspections. However, prior to the Compliance Inspection, County staff did send Water Board staff comprehensive lists of 538 industrial and commercial businesses, 394 food service facilities, and 144 horse boarding facilities.
u. The BIP includes a discussion on how the Contra Costa Clean Water Program (CCCWP) conducted an analysis of businesses during the mid-1990's to identify a base-line universe of industrial and commercial businesses with high potential to cause stormwater pollution. CCCWP also conducted a study, in July 2004, of businesses that generate pollutants of concern and in December 2004, identified the list of pollutants of concern in a report entitled *Draft Pollutants of Concern Pollution Prevention and Control Measures Plan*. The County uses the pollutants of concern process to assist in evaluating the types of businesses identified as targeted for inspections. But it is unclear if the County has considered and incorporated businesses that have the functional aspects and types listed in C.4.b.ii. of the MRP.
v. The BIP prioritizes businesses for inspection as priority, high, medium, and low. The following types are considered "priority" and are inspected annually: NOI, community/commercial pools, enforcement reinspection, pretreatment permitted facilities, manufacturing facilities, corporation yards, and auto dismantlers. The following types of businesses are considered "high" and are inspected every 1-2 years: plant nurseries, golf courses, and cement and asphalt batch plants. The following types are considered "medium" and are inspected every 2-3 years: vehicle services facilities, food service facilities, retail gas outlet, and marinas (but only handwritten in the April 2001 Plan). Horse boarding facilities are considered "low" and inspected once every 5 years.
w. The County's BIP is one of the very few BIPs reviewed by Water Board staff that lists a mechanism to include newly opened business that warrant inspection into its BIP! Annually, the County reviews the Health Services Department Routine Inspection database, Environmental Health's annual registration of Food Service Facilities, POTW permitted facility databases, and Hazardous Materials Inspection Facilitiy Database and NOI listings to identify new businesses for inclusion in the BIP.

Required Action #12: The County shall (1) evaluate its businesses for the functional aspects and types listed in C.4.b.ii. of the MRP and prioritize them into its BIP for inspection, as appropriate; (2) include a discussion in the BIP that shows that the County has considered the functional aspects and types listed in C.4.b.ii. for inclusion into its BIP; (3) include the total number and list of facilities requiring inspections in the BIP; and (4) have its BIP available for use and dissemination as one document.

Findings and Observations – Interdepartmental Services for Inspections

x. Oversight of the County's Provision C.4. Program is provided by the County's Watershed Program through Charmaine Bernard. The County's inspection of all business facilities is contracted out to other County divisions: industrial and commercial facility inspections are contracted to the Health Services Department – Hazardous Materials; and food services and horse boarding inspections are contracted out to Health Services Department – Environmental Health Division. Each year, the County's Watershed Program enters into Interdepartmental Services Agreement with each division to provide the inspection services.
y. Water Board staff reviewed the 2011-2012 Agreements with each department.

Both Agreements detail the number of facilities that need to be inspected; what to look at during inspections; education and technical assistance that needs to be given to businesses; inspection forms inspectors need to fill out to document findings and actions taken; follow-up actions for violations; and the enforcement tool box based on the County's ERP. For horse boarding facilities, the Agreement does not discuss the inspection forms inspectors need to fill out to document findings and actions taken; follow-up actions for violations; or the enforcement tool box based on the County's ERP. During the interview, County staff said it was piloting the horse boarding inspection program.

z. Attached to the County's April 2011 BIP is a table entitled *Enforcement Response Plan Inspection Report Terminology*. According to discussions with County staff, this table tries to match the exisiting enforcement processes in the Environmental Health and Hazardous Materials divisions to the County's ERP.

Deficiency #3: The *Enforcement Response Plan Inspection Report Terminology* fails to comply with the MRP requirements. In addition, the *Enforcement Response Plan Inspection Report Terminology* fails to be consistent with the County's ERP. See Attachment 3 for summary of review.

Required Action #13: The County shall revise its *Enforcement Response Plan Inspection Report Terminology* to be consistent with its ERP, which will be revised pursuant to the above required actions.

Findings and Observations – Interdepartmental Services for Inspections (continued)

aa. In the Agreement's Inspection Plan with the Hazardous Materials Division, there is guidance on corrective actions on the bottom of Page 2:
"CCHSHMP inspectors will notify facility owner/operator of any actual or potential pollution violation, clearly document the number of discharges/violations and potential discharges i.e. inappropriate BMPs and ensure all violations are corrected in a timely manner with the goal or correcting them before the next rain event or within 10 businesses days. Minor violations will be considered to be corrected in a timely manner within 30 days."

bb. On Page 3 of the Agreement's Inspection Plan with Hazardous Materials, there is guidance on how to perform follow-up actions and re-inspections:
"Follow-up actions may include contacting out-of-compliance facilities by email or phone and documenting correspondence with facilities; or by performing re-inspections at an estimated 15 industrial and commercial facilities."

cc. On Page 2 of the Agreement's Inspection Plan with Environmental Health, there is guidance on how to perform follow-up inspections:
"Perform remedial follow-up inspections (re-inspections) in the same fiscal year, at an estimated 25% of the facilities visited or at approximately 40 retail facilities inspected where major violations were observed. For minor violations, inspectors may be able to require facilities to provide evidence of correction action by mail or email to eliminate the need to inspectors to have conduct a re-inspection."

Deficiency #4: The Inspection Plan for Hazardous Materials fails to clearly direct inspectors to verify that all corrective actions have been implemented in a timely manner, before the next rain event but no longer than 10 business days from the time the violations were first discovered, unless longer time is required with a statement of justification.

Required Action #14: The County shall ensure that the information contained in future Inspections Plans for Hazardous Materials and Environmental Health is consistent with its revised ERP.

The County must require actual non-stormwater pollutant discharges to be abated immediately. All violations, regardless of their status as minor, major, Class II, or Incident Response, must be corrected within a timely manner, before the next rain event but no longer than 10 business days after the violations are discovered, unless longer time is required with a statement of justification. Corrective actions can be temporary and a longer compliance time can be allowed under certain circumstances such as capital improvement. Rationales for longer compliance times must be documented pursuant to Provision C.4.

Again, the County, under certain scenarios, can allow facilities to self-certify that the implementation of corrective actions have been done in a timely manner. An email or fax with pictures and a signed certification statement could be an option for self-certification of corrective actions. But the submittal of the email or fax must demonstration compliance was achieved in a timely manner. These certain scenarios and procedures for self-certification must be included in the ERP, and clearly communicated in the Interdepartmental Agreements and to inspectors.

Findings and Observations – Interviews

dd. Water Board staff spoke with John Wiggins of Environmental Health and Devra Lewis of Hazardous Materials regarding their implementation of the Interdepartmental Service Agreements for Provision C.4. inspections.

ee. Hazardous Materials and Environmental Health divisions are paid to conduct a certain number of stormwater inspections and re-inspections each year. The list of sites to be inspected is provided annually by Ms. Bernard as part of the Interdepartmental Service Agreement.

ff. The County has a good handle on its restaurants and food facilities because they are required to have a permit to operate. Identification of all of its industrial and commercial facilities is more challenging. The County, recognizing this challenge, has gotten a list from the Assessor's Office to understand where its industrial and commercial businesses are located by Assessor's Parcel Number. This is different than how the Business Inspection Plan describes the process for keeping the business lists up to date, but is a reasonable approach.

gg. Most inspections are unannounced. Environmental Health may give notice to horse boarding facilities.

hh. The horse boarding facility inspection is educational. The County wants manure to be tilled into the soils so that it is not a nuisance. During the wet season, facilities cannot get the heavy equipment into the field to till the manure into the soil. Facilities can cover the soil during the wet season. There is no significant regulatory approach currently. However, if there are major issues, the County calls in the Department of Fish and Game.

ii. Environmental Health keeps a file for each facility and sends copies of the inspection reports to Ms. Bernard twice a year. Hazardous Materials keeps its inspection reports and other information in a database and it also sends copies of its records to Ms. Bernard twice a year. Ms. Bernard enters select data points from each inspection record into Excel tables and stores the inspection reports by year.

jj. Water Board staff did not evaluate any of the County's database or tabular formats for recordkeeping compliance as required in Provision C.4.c.ii.(4). Water Board staff did review the lists of industrial and commercial businesses, food service facilities, and horse boarding facilities that County staff submitted prior to the Compliance Inspection that were all in Excel. The full tabular format may contain more information than what was provided in the lists.

kk. Annual training is arranged by Ms. Bernard for both divisions. Training topics include discussions about previous year's issues and their resolutions.

Required Action #15: The County shall (1) develop and implement mechanisms to ensure that it has an accurate list of all industrial facilities located in unincorporated County and (2) update its BIP with discussions of these mechanisms and accurate lists.

Findings and Observations from Inspection Report Review

ll. As part of the Compliance Inspection, Water Board staff normally review files of specific industrial and commercial facilities to determine MRP compliance. Each of these files typically include inspection reports, correspondence, analytical data, and notes for the facility.
Environment Health keeps paper files and offered to have Water Board staff come to its office to review the business files.
Hazardous Materials store its files electronically but Water Board staff was unable to access those electronic files without the presence of Hazardous Materials staff. Hazardous Materials staff provided records upon request for the following businesses: C&J Fencing, CCC Central Fleet Services, CCC Public Works, Colorvue Growers, Pinole Rodeo Auto Wreckers, and Vargas Auto Repair.
Because Water Board staff reviewed only the inspection reports and inspection lists provided by the County rather than the facilities' file, the file review was limited. For the most part, if an inspection found violations, subsequent follow-up inspection forms and correspondence were attached all together.

mm. Environmental Health Department Inspection Reports – Water Board staff evaluated 48 inspection reports for 23 food service facilities inspected between January 2010 and April 2012 (See Attachment 4 for evaluation sheets.). Following are specific findings:

- The inspection form is triplicate. A business representative signs the inspection form. One copy goes to file; another copy goes to the operator; the third copy goes to REHS. It appears that the business representative gets a copy of the inspection form at the conclusion of the inspection.
- The inspection form has a space for the inspection date as well as the inspection time. The inspection time is good to have if re-inspection is done the same day.
- The inspection form has a space to write in the earliest re-inspection date. This can be interpreted as the required compliance date. It is important for a business to know when it must have all of its corrective actions implemented for violations. The County consistently gave a re-inspection date around 10-business days after the violations were discovered. It does not appear that compliance dates were given with regards to the next rain event.
- The inspection form has boxes to check off the inspection type: routine, re-inspection, and complaint or request. Inspectors used a new form for each site inspection.
- The inspection form has a comprehensive list of stormwater food service violations, each with a violation code. For each type of stormwater violation, inspectors can check off if there were no violations, minor violations, or major violations. Minor and major violations are defined on the inspection form and match the County's Level 1 and Level 2 enforcement levels in its ERP.
- The inspection form has boxes to check off for the type of enforcement action taken: cease/desist, closure, and refer to public works department. This list of enforcement tools does not match the enforcement tools in the County's ERP.
- There is space for inspectors to write notes and inspectors can use additional forms made especially for inspection notes. The additional forms are also in triplicate. All inspectors take notes. For each violation code, the inspectors write down their observations and the required corrective actions. Both Inspector Avila and Inspector Tipton wrote detailed notes and clearly stated whether the violations have been abated. Also, in the case of Noodle House's liquid waste/stain build up around the dumpster, Inspector Tipton called the mobile washer to have them fax the invoice to ensure the surface washing was done appropriately. In addition, the notes clearly indicate that inspectors brought in the property management company early on to resolve issues that involve other businesses in the complex.
- For two inspections with violations (Hop Sings Kitchen on 1/13/11 and Los Panchos on 1/13/11), it was noted that Michelle Dimaggio of the Food Program would conduct a follow-up inspection

within 24 hours. There were no records indicating that the re-inspections occurred. It is possible that the records are located in the respective files at Environmental Health's office.

- At the conclusion of the inspections, the facility gets a copy of the inspection form. These inspection forms can be enforcement actions if there are appropriate check boxes for the enforcement tools.
- The County's BIP states that a business with evidence of active non-stormwater pollutant discharges and gets issued a Notice of Violation will be subject to annual inspections at least once the following year. Because Water Board staff did not review the actual files for the facilities, it is unclear if Draeger's Supermarket, with an active non-stormwater pollutant discharge on 2/15/11, and Tacos El Grullense/Mobile Truck, with an active non-stormwater pollutant discharge on 1/15/10, were inspected the following year.

nn. Hazardous Materials Program Inspection Reports – Water Board staff evaluated 57 inspection reports for 36 industrial or commercial facilities inspected between February 2010 and March 2012 (See Attachment 5 for evaluation sheets.). Following are specific findings:

- The inspection form lists 12 different types of stormwater ordinance violations, alongside the specific ordinance requirement. The inspection form has a space to write in the Violation Due Date or Violation Corrected date for each violation. It is important for businesses to know when corrective actions must be implemented for violations. Violation Due Dates were mostly around 30-business days after the violations were discovered. Compliance dates were not given with regards to the next rain event. For each type of stormwater violation, inspectors can note if it is a minor, Class I, or Class II violation. These three types of violations are not defined on the inspection form and are not listed in the County's ERP.
- The inspection form has boxes to check off the inspection type: routine or follow-up. Inspectors use a new form for each visit.
- There are 7 types of BMPs (BMP 1 – BMP 7) inspectors that can recommend, state that they exist, or state during a follow-up inspection that they have been implemented. When BMPs are recommended, inspectors set a compliance date for implementation of the recommended BMPs and in many cases, re-inspect to verify implementation of the recommended BMPs. In some cases, the recommended BMP seems to remedy a violation cited in the inspection form. Inspectors also list specific recommendations in the continuation sheets. It appears that businesses do implement the recommended BMPs. However, recommendations are usually reserved for situations where things can be done in a better way and not for situations where clear violations have been identified.
- Inspection forms include "continuation sheets" where the inspectors write inspection observations and issue enforcement actions. The observations are very detailed. The continuation sheet is also where the inspectors write the enforcement actions, if taken.

Required Action #16: The County shall evaluate and better define in its ERP and Business Inspection Plan what the County expects when a BMP is "Recommended" during an inspection by Hazardous Waste Program inspectors. It is unclear if recommendations are requirements and if there are consequences for non-implementation of recommendations tied to violations.

oo. Environmental Health – Inspection forms for both Hop Sings Kitchen (1/13/11 inspection) and Los Panchos (1/13/11 inspection) state that the food service program would conduct a follow-up inspection within 24 hours. The records sent to the Watershed Program did not include any records of the follow-up inspections. For My Liquors (1/10/11), the inspector saw a pipe protruding from an exterior wall discharging water. This was referred to the Watershed Program. The records provided by the Watershed Program did not include any additional information on this site. Again, it is possible that the information is in the respective businesses' paper copy files located in Environmental Health.

Hazardous Materials – In the inspection record for Colortime Growers (5/26/11), Colortime is cited for the mixed soil and construction debris that was dumped on its property and noted that Colortime notified the County when another entity began this dumping on its property in late 2010. Water Board staff asked the Hazardous Materials staff to provide all file records for Colortime since December 2, 2009. There are no records that Colortime notified the County when the dumping started, what follow-up actions the County took following the notification from Colortime, or what further actions were taken following the May 26, 2011 inspection to ensure that the dumped material was removed or appropriately contained.

Water Board staff also asked the Hazardous Materials staff to provide all file records for Pinole-Rodeo Autowreckers since December 2, 2009. Pinole-Rodeo Autowreckers seem to have an incomplete file. The inspection record for the September 27, 2011 inspection has only the Compliance Checklist. There is no record of a Notice of Violation being issued on January 20, 2012 even though the March 6, 2012 inspection form indicates that a Notice of Violation was issued on January 20, 2012. During the interview, Hazardous Materials staff stated that Pinole-Rodeo Autowreckers has numerous issues that are challenging for the business to resolve and that the Department of Fish and Game has taken over enforcement of the business. There are no records indicating that the County has escalated enforcement beyond a Notice of Violation and has referred the business to the Department of Fish and Game.

Required Action #17: The County shall evaluate how it maintains its files and ensure that its files are accurate and complete.

Violation #4: The County failed to require immediate abatement of discharge, and require and/or verify implementation of corrective actions in a timely manner, with the goal of correcting them before the next rain event but no longer than 10 business days after the violations are discovered. The County also failed to provide rationale for compliance dates beyond 10 business days after the violations are discovered.

Attachment 6 lists the facilities that did not have corrective action required and/or verified in a timely manner.

The Hazardous Materials Program's inspection form allows 30 days for businesses to correct minor violations.

Pinole-Rodeo Autowreckers was inspected on September 27, 2011. But since the inspection record is incomplete, it is unclear what were the specific violations, required corrective actions, enforcement action, and the required compliance date. A subsequent inspection on January 20, 2012 shows that the required compliance date had been extended to July 20, 2012. The MRP requires a rationale to be recorded if more than 10 business days are required for compliance. There is no rationale for the extension in the records reviewed. In discussions with Hazardous Materials staff, it appears that the rationale may be that local officials have asked the County to work with the small business. Any rationale must have a timeline listing the specific corrective actions that must be accomplished by certain dates. There is no timeline for corrective actions, but the County did note improvements during its January 20, 2012 inspection and the inspection form for the March 6, 2012 notes that the business was making improvements. Immediate corrections can be temporary and short-term but the County must have procedures in place to verify the implementation of the temporary, short-term corrections, require a timeline for the permanent corrections, and verify the implementation of the permanent corrections. This site has had a history of stormwater violations and has been referred to the Department of Fish and Game and the Water Board.

Required Action #18: The County shall ensure that appropriate corrective actions are required for violations and that the corrective actions are verified in a timely manner. This should be before the next rain event, but no later than 10-business days after the violations are discovered. The County shall revise its inspection forms to reflect this MRP requirement. The County shall also ensure that rationale, for compliance dates beyond 10 business days after the violations are discovered, are recorded and compliance timelines are established.

Violation #5: The County failed to implement its ERP.

Of the 35 Food Service inspections that found violations, only one enforcement action was taken: Cease and Desist to Tacos El Grullense/Mobile Truck on January 15, 2010. The rest of the facilities with violations were just given educational materials. (Please see Attachment 7.)

Hazardous Waste inspectors cite minor, Class I, or Class II violations. These three types of violations are not listed or defined in the County's ERP.

Of the 36 inspections done by Hazardous Waste inspectors that found violations, the County took four enforcement actions:

1. AG Schwartz Trucking, 3/24/10 , Class II, Notice to Comply
2. Deal Autowreckers, 11/21/11, Minor and Recommended BMPs, Notice to Comply
3. Diablo Boat Works, 3/24/10, Class II, Notice of Violation
4. Pinole-Rodeo Autowreckers, 6/15/10, Class II, Notice of Violation

No other enforcement actions were taken at businesses with violations, even at ones with Class II violations. (Please see Attachment 8.)

Pinole-Rodeo Autowreckers inspection form for January 20, 2012 noted "…run-off still leaving the property." Based on the notes for the business, the run-off was probably contaminated with non-stormwater pollutants from the business. No action was taken to stop or divert the run-off. And the run-off appears to be an ongoing problem since at least June 30, 2011.

Required Action #19: The County shall ensure consistent implementation of its ERP and revise both inspection forms to reflect the enforcement tools in its ERP.

Required Action #20: The County shall define "minor", "major", "Class I", and "Class II" violations in its ERP and associate them with appropriate enforcement tools.

Required Action #21: The County shall provide training to staff responsible for implementing Provision C.4., C.5., and C.6. and the updated standard operating procedures; revised ERP; and revised inspection forms.

Recommended Action #3: The County should revise its industrial and commercial business inspection form to more clearly identify the violations and the required actions the business must implement. This is similar to how the Food Services inspection form is done.

Recommended Action #4: In the continuation sheets used by Hazardous Waste, the County should clearly identify the violation (i.e. SW09) with the required follow-up action that corrects the violation.

2.4 Illicit Discharge Detection and Elimination

The County's compliance with Illicit Discharge Detection and Elimination of the MRP was not part of the scope of this Compliance Inspection. Water Board staff did review the ERP for compliance with C.5. and those comments have been reflected in the ERP section. In the industrial and commercial business files, there were two illicit discharges from two businesses: C&J Fencing and Pinole-Rodeo Autowreckers.

Findings and Observations

pp. Discoloration of water in a creek was reported on June 11, 2010. The County responded, found the source for the discoloration (C&J Fencing), required clean up and corrective actions, verified that corrective actions have been implemented appropriately to clean up, and seemed to have implemented Level III, cost recovery, of its ERP. There was no fish kill. The County implemented its ERP well. In addition, the County placed C&J Fencing on its priority inspection list and the business was inspected on December 9, 2011. The County implemented is BIP.

qq. On June 30, 2011, an Environmental Health inspector reported a sheen leaking from Pinole-Rodeo Autowreckers into the storm drain. The County did not inspect the business until September 27, 2011. The inspection form for the January 20, 2012 noted "Run-off still leaving property and recommend that employees need to do a better job of containing run-off."

Violation #6: The County failed to respond in a timely manner, require immediate abatement of the discharge, effectively eliminate the illicit discharge at Pinole-Rodeo Autowreckers, take appropriate enforcement actions, and require implementation of necessary temporary controls to eliminate the sheen leaking from the property into the stormdrain.

Required Action #22: The County shall revise its standard operating procedures to direct inspectors to (1) respond to illicit discharge complaints in a timely manner, (2) ensure that all illicit discharges are fully cleaned up and corrective actions are implemented in a timely manner, (3) sample discharge and receiving water as feasible, and (4) implement its ERP appropriately. The County shall also revise its ERP to direct (1) immediate implementation of BMPs to divert the illicit discharge away from the storm drain and/or waterbodies, (2) timely clean-up and timely verification of the corrective actions, (3) escalation of enforcement for noncompliance and for patterns of noncompliance, and (4) requirement for corrective actions to reduce future non-compliance.

Required Action #23: The County shall train its inspectors on the revised standard operating procedures and ERP.

2.5 Construction Site Control

Water Board staff evaluated the County's implementation of select components of Provision C.6. – Construction Site Control of the MRP.

Findings and Observations

rr. In November 2009, US Environmental Protection Agency's consultant, PG Environmental, conducted a compliance inspection of the County's construction stormwater control program to evaluate compliance with Contra Costa Countywide NPDES Municipal Stormwater Permit Number CAS0029912, Order 99-058 (Previous Permit). PG Environmental determined that the City of San Ramon annexed some portions of the County's construction sites at some point during construction. PG Environmental was unable to determine the annexation process or timeline, so it was uncertain as to when the County handed over responsibility for the annexed projects..

ss. Water Board staff wanted to clearly understand the annexation process and wanted assurance that Provision C.6. is being implemented through all phases of construction until the site is fully stabilized by landscaping or the installation of permanent erosion control measures.

tt. Slava Gospodchikov, Design and Construction, made the time to clearly explain the annexation procedure.

- The annexation of newly developed land in unincorporated County into a city exists only between the County and the City of San Ramon.
- Once County staff determines that the public infrastructure in an area is complete, the County Board of Supervisors accepts the infrastructure. Following this acceptance, San Ramon's City Council accepts the improvements of the public infrastructure into the City of San Ramon. The lots and landscaping are not complete at this point and the County retains authority over construction stormwater controls for these areas until certificates of occupancy are issued. When a lot is issued a certificate of occupancy, it is fully stabilized by landscaping or the installation of permanent erosion control measures. Groups of homes in an area tend to be issued their certificate of occupancy at the same time.
- Mr. Gospodchikov was uncertain if the public landscaping, private common landscaping, and private front yard landscaping were complete at the time of their respective annexations.

Required Action #24: The County shall discuss if the public landscaping, private common landscaping, and private front yard landscaping are complete (land fully stabilized) at the time of their respective annexations into the City of San Ramon.

Findings and Observations Continued

uu. Nester Baligod, Conservation and Development Department is in the Grading Group and is responsible for reviewing the Stormwater Pollution Prevention Plans (SWPPPs) and Erosion Control Plans for Public Projects – Buildings and Facilities, Public Infrastructure on Private Projects, and Private Projects. SWPPPs are required for sites disturbing one or more acre of land. Erosion Control Plans are required for sites issued a grading permit but do not disturb one or more acre of land. A grading permit is issued for most sites moving more than 200 cubic yards of dirt. Pre-construction meetings are usually held for single family home projects. Grading inspectors inspect sites at least once a month, throughout the year and problematic sites are inspected weekly. Written Notices are issued for issues such as dirt on the streets, trash, run-on and run-off, improper storage, and bare slopes. If the issues are not corrected when the inspectors returns to verify compliance, a Notice of Violation is issued. If the site is still noncompliant, a stop work order can be issued by the deputy director or a permit hold can be implemented by the inspector. A Notice of Violation can also be issued to sites with an illicit discharge. Inspections are recorded on Acrobat based inspection forms. Once grading is finished, construction site control inspections are turned over to the Building Group, also in the Conservation and Development. Nestor is available to assist the Building Group on any construction site stormwater issues.

vv. The Building Group can issue Warning Notices and Notices of Violations for construction site stormwater violations. Water Board staff did not speak with inspectors for the Building group.

ww. Dante Moabe, Conservation and Development Department – Grading, inspects the road portion on private properties. He does not inspect during mass grading. Once he gets the approved plans, he calls to schedule a pre-construction meeting. He inspects at least once a month if the site is active. But Public Works inspectors are also out doing erosion and sediment control inspections while they are out on site doing other things. Mr. Moabe normally issues a Level 1 enforcement action for BMP maintenance issues, and a Level 2 enforcement action for illicit discharges, missing BMPs, or construction entrance issues. Once the road is stabilized, his work is done.

xx. Leigh Chavez, Public Works – Environmental Services, is responsible for reviewing SWPPPs for Public Projects – Roads, Bridges, and Flood Control Projects. Most of these projects are completed during the summer months. Some projects may go beyond the dry season. Implementation and enforcement of the SWPPP is turned over to Public Works – Design Construction. Neil Leary and Rob Tavenier, Public Works – Design Construction, described the resident engineer's implementation of the SWPPP in the field. A resident engineer conducts daily inspection. If the resident engineer finds violations, he calls the contractor to request same day corrections. A field order for the required corrections is signed by the contractor and the resident engineer. The resident engineer has the ability to withhold pay if corrective actions are not implemented.

yy. Based on our discussions with County staff, the County does not report all of the inspections and enforcement it does for its construction site control program in its Annual Report. The Annual Report's data, inspection records, and tracking data table are limited to monthly inspections at sites disturbing one or more acre of land during the rainy season. (The discussions in the Annual Report do mention the other inspections that are not reflected in the data.) While what is reported may fulfill the minimum requirements of the MRP, it certainly does not represent the extent of work the County does to prevent construction site discharges of pollutants and impacts on beneficial uses of receiving waters.

Findings and Observations – Inspection Forms

zz. Water Board staff reviewed the inspection forms, tracking data table, and Annual Report for the 2011-2012 reporting year. Water Board staff did not ask for copies of Notice of Violations to review.

aaa. The inspection form appears to have all the information necessary for the County to use for its annual reports.

bbb. The inspection form has five columns to record information about the BMPs. It is not clear what the difference is between BMP "needs attention" and when it is in "violation".

ccc. The inspection form lists specific measures for each of the BMPs. Adding an "other" option for each BMP category will allow space for other measures inspectors may see in the field.

ddd. For the Non-Stormwater Management BMP category, Concrete Washout Area is the only measure for this category. Other Non-Stormwater Management measures can include dewatering, vehicle cleaning, equipment cleaning, hosing down the street, etc.

eee. Most of the filled out inspection forms have one or more of the following issues: forms are not completely filled out; forms seem inaccurately filled out; and/or information on forms is unclear. Attachment 9 has examples of these issues.

fff. The inspection forms indicate that no inspections were done when it was raining during the 2011-2012 reporting year. The weather during all inspections was either cloudy or sunny. The inspection forms also show that whatever the weather was during the first inspection of the season, it was the same weather during every inspection of the season.

ggg. On October 27, 2011, the inspector discovered a sediment control issue at LaColina Estates. A Verbal Notice was given and the next follow up inspection date was supposed to be November 3, 2011. There are no further inspection records for LaColina Estates after October 27, 2011.

Required Action #25: The County shall define the difference between "needs attention" and "violation" in its inspection form; update its standard operating procedures on what enforcement tools are available for a BMP that "needs attention" and those that are in "violation"; and train its inspectors on these definitions and the enforcement tools available for each.

Violation 7: The inspection forms fail to show that corrective actions for violations were consistently verified in a timely manner. The MRP requires timely correction of violations, before the next rain event but no later than 10 business days after the violations are discovered, unless a justification for a longer time is recorded.

Required Action #26: The County shall (1) update its inspection form to allow inspectors more flexibility to record observations in the field; (2) update its standard operating procedures for inspections to reflect the requirements of the MRP; and (3) train its inspectors on the standard operating procedures for inspections and how to fill out each section of the inspection form completely and accurately.

Findings and Observations – Tracking Data Table and Inspection Forms

hhh. In January 2011, Water Board staff requested the County's tracking data table for the 2009-2010 rainy season. It was a transitional year because part of the year was under the Previous Permit and part of the year was under the MRP. But even though it was a transitional year, the tracking data table was condensed to just the required fields so it was easy to read and follow.

iii. County staff provided its tracking data table for Provision C.6. and the individual site inspection forms. The tracking data table is large, printed on two sheets of 11"x34" paper. County staff explained that inspectors use an Adobe Acrobat inspection form. The data points collected on the inspection forms populate the tracking data table.

jjj. The County's tracking data table shows that it has the required data fields for the electronic database or tabular format.

kkk. The County demonstrated diligence by inspecting a number of sites outside of the rainy season to ensure that construction sites are implementing appropriate Best Management Practices (BMPs). Pursuant to Provision C.6., the County must require all construction sites to have appropriate BMPs year round to minimize pollutant discharge to receiving waters. Construction sites must have appropriate BMPs year round to minimize pollutant discharge to receiving waters. We have seen non stormwater discharges, such as washing of landscaping materials, and equipment used to paint, stucco, and spackle, from construction sites outside of the rainy season. The following sites were inspected outside of the rainy season:

Site	Dry Season Months Inspected
Avalon Bay; El Rincon; LaColina Estates; MS 03-0028 Bay View Avenue; Pedestrian Bridge; SD 8907; SD 8969, SD 9246, RA 1246; SD 9165; South Ave & Regents Place Frontage Improvements; Valley View Rd; Alhambra Valley Road Safety and Bicycle Facility	September
Multi-Family Apartment Complexes; Oakmont Memorial Park Cemetery; San Pablo Medical Center; Subdivision 7998; Subdivision 8984	May

lll. We appreciate the County's inspection of sites disturbing less than one acre of land. Pursuant to Provision C.6., the County must require all construction sites to have appropriate BMPs year round to minimize pollutant discharge to receiving waters. These smaller sites are not specifically required to be inspected at a certain frequency. The County inspected two smaller sites, Lots on Warren Road and MS 03-0028 Bay View Avenue, regularly during the reporting year. The County's work with smaller sites helps minimize the discharge of pollutants into receiving waters.

mmm. The final inspection forms for SD 8907; SD 8969, SD9246, RA 1246; and SD 9165 all state that these sites were hydro-seeded and closed for the winter. There were no further inspection records for these sites. It is unclear if the hydro-seeding established roots and grew and was fully stabilized. Sometimes, hydro-seeds do not get enough water to grow and/or they do not have enough time to establish roots before a heavy storm washes away the seeds.

nnn. The County inspected almost all of its sites at least once a month during the rainy season. For Avalon Bay and Alhambra Valley Road Safety and Bicycle Facility, the County's tracking data table clearly stated when projects were completed. For Valley View Rd, the tracking data clearly stated that vegetation had taken. It was clear when these sites were fully stabilized and therefore, no longer

required monthly inspections during the rainy season. The tracking data table shows that the County may have missed monthly inspections at a number of sites towards the beginning of the rainy season. Perhaps construction started after the rainy season.

Site	Monthly inspections missed
LaColina Estates; Pedestrian Bridge; SD 8907	November - April
Sea Breeze, Rapallo Lane	October – January

ooo. The MRP requires the County to conduct monthly inspections, October – April, at all construction sites disturbing one or more acre of land and at all high priority sites, through all phases of construction until sites are fully stabilized by landscaping or with the installation of permanent erosion control measure. The County inspected almost all of its sites disturbing one or more acre of land at least once each month during the rainy season to prevent construction sites from discharging pollutants.

El Rincon was not inspected in November 2011 and Subdivision 8969/9246 November 2011 – January 2012 and March 2012.

Violation #8: The County failed to inspect all construction sites disturbing one or more acre of land monthly during the rainy season.

Required Action #27: The County shall train its inspectors to (1) conduct monthly inspections, October – April, at all construction sites disturbing one or more acre of land and at all high priority sites, through all phases of construction until sites are fully stabilized by landscaping or with the installation of permanent erosion control measures, (2) state in the inspection forms when sites are fully stabilized, and (3) record on the first inspection form an appropriate comment, such as "First inspection", for sites that start construction after October. The above information shall also be included in the standard operating procedures for inspections.

Finding and Observation – Tracking Data Table, Inspection Forms, and Annual Report

ppp. Attachment 10 shows the required Annual Report data fields in the 2011-2012 Annual Report that do not match the County's tracking data table.

Violation #9: The County's tracking data failed to match its 2011-2012 Annual Report in a number of required fields.

Required Action #28: The County shall ensure that the information in the Annual Report matches the data in the inspection forms and tracking data table.

Recommended Action #5: The County should revise its electronic database/tabular format so that it is easier to read and follow the inspections and actions. Revision to its electronic database/tabular format should help the County with annual reporting.

Findings and Observations – Tracking Data Table, Inspection Forms, and Enforcement Response Plan

qqq. We evaluated the County's implementation of the 2011 ERP in its 2011-2012 construction site inspection program.

rrr. The tracking data table indicates that the City implemented two levels of its ERP, Verbal Warning and Notice of Violation.

- A verbal notice, Level 1 action, was given to LaColina Estates on October 27, 2011 for inlet filters needing attention. This enforcement action is consistent with the guidance given in the ERP for this type of violation.

- A verbal notice, Level 1 action, was given to El Rincon on October 10, 2011 for dirty streets. This enforcement action is consistent with the guidance given in the ERP for this type of violation.
- A Notice of Violation, Level 2 action, was given to South Ave. & Regent Place Frontage Improvements on September 29, 2011 for failure to have a stabilized construction entrance. A second Notice of Violation was issued on October 11, 2011 for the same violation. A third Notice of Violation was issued on January 12, 2011 for failure to have a stabilized construction entrance. Lack of a stabilized construction entrance would fall under pollutant exposure in the County's ERP and would warrant at least a Level 1 enforcement action. The inspector, in all three instances, decided to escalate enforcement to Level 2.

sss. The inspection form has the following options for enforcement actions: verbal notice, Notice to Comply, Notice of Violation, Stop Work, and Administrative Fine. The 2011 ERP provides the following options for enforcement actions: Verbal Warning/Warning Notice/Education, Notice of Violation, Formal Enforcement (Administrative Penalties, Cost Recovery), and Legal Action and/or Referral to State and Federal Agencies.

Required Action #29: The County shall (1) update the enforcement options in the inspection form to match the options provided in the County's ERP or vice versa, (2) update its standard operating procedures for inspections, and (3) train its staff on the updated inspection form and standard operating procedures.

Findings and Observations from Field Inspections

ttt. Water Board staff visited Shapell's Tessera in San Ramon, Hurley Construction's Highland Point Apartments in San Ramon, and KB Home's Belmont Terrace in Martinez with County Inspector Ingram and Romo and County staff Jordan on May 17, 2012. Inspector Ingram is responsible for inspecting the public portions of private projects and Inspector Romo is responsible for inspecting the private portions of private projects. These site inspections were conducted during the first month of the dry season.

uuu. The inspectors stated they visit these sites about every day.

vvv. Field inspection observations:

Shapell's Tessera – Framing, inside work, and finishing of lots were the primary activities at this site. The contractor appeared to be implementing good construction site controls. (See pictures in Attachment 9.) County inspector explained that Shapell effectively oversees its job sites. It has two superintendents over a relatively small jobsite.

Hurley Construction's Highland Point Apartments – Framing, inside work, and finishing of lots were the primary activities at this site. Water Board staff noted a few issues at this site: (1) improper disposal of stucco and/or concrete waste, (2) dusty streets, especially along the curbs and around material storage areas, and (3) lack of sediment controls in dirt planter areas. (See pictures in Attachment 10.) County inspector stated that these were not issues during the previous inspection. These issues were pointed out to the superintendent, who quickly made calls to have the issues corrected. County inspector was to conduct a follow-up inspection to ensure that corrective actions have been implemented.

KB Home's Belmont Terrace – Framing, inside work, and fishing of lots were the primary activities at this site. Water Board staff noted a few issues at this site: (1) lack of a stabilized construction entrance, (2) lack of inlet protection and dirt piled right above the inlet, and (3) evidence of sediment discharge. (See pictures in Attachment 11.) These issues were pointed out to the superintendent. County inspector was to conduct a follow-up inspection to ensure that corrective actions have been implemented.

Required Action #30: The County shall ensure that construction sites have appropriate BMPs year round to minimize pollutant discharge to receiving waters.

Attachment 1

Attachment 1

Provision C.3. File Review

Documents	Belmont Terrace	CA Shakespeare Theater	El Rincon
Initial SWCP, including engineering drawings	There are a number of SWCPs with drawings but unclear which SWCP was the initial plan.	There are a number of SWCPs with drawings but unclear which SWCP was the initial plan.	There are a number of SWCPs with drawings but unclear which SWCP was the initial plan.
Correspondence between County staff and project proponent regarding the revisions to the SWCP	Yes	Yes	Yes
Revisions to the SWCP based on County staff comments	Yes	Yes	Yes
Final SWCP, including engineering drawings	Dated May 24, 2011.	Dated December 2, 2009.	Dated May 26, 2010 but no engineering drawings.
Signed or adopted Conditions of Approval	Approved December 5, 2005 by Zoning Administrator.	Approved June 15, 2009 by Zoning Administrator.	Couldn't find a copy in the files.
Record of annexation into the Community Facilities District	Couldn't find a copy in the files.	Couldn't find a copy in the files.	Couldn't find a copy in the files.
Executed Operation and Maintenance Agreement, including maps showing location of treatment units	Couldn't find a copy in the files.	O&M Agreement was approved by the Board of Supervisors on March 15, 2011. It does not include maps. No requirement to document inspection findings.	O&M Agreement is dated June 2, 2010. Treatment units difficult to delineate on map.
45-day inspection of newly installed stormwater treatment systems	Most likely installed before December 1, 2010.	Installed before December 1, 2010 but the County conducted this inspection on August 4, 2010.	Couldn't find a copy in the files. But the tabular format shows that this inspection was conducted on February 22, 2012.
Engineering drawings showing that all run off will be treated appropriately	11x17 drawings seem to show that some run off towards the bottom of the street on both Falling Star Drive and Little Valley Drive does not get treated. Mr. Swartz confirmed this observation.	11x17 drawings seem to show that all run off will be treated.	Yes
Calculations showing that the treatment systems are sized adequately	Yes	Yes	Yes
Engineering drawings showing that the treatment systems are designed adequately	Couldn't find a copy in the files.	Couldn't find a copy in the files.	Okay but need to build under drains that are at least two-thirds the width of the bottom of the bioretention unit to prevent clogging and to allow more time for infiltration.

Attachment 2

Attachment 2

Provision C.4. Enforcement Response Plan Review

Enforcement Level	Enforcement Tools	Field Scenarios for Enforcement Level
1 – Potential to Violate	• Verbal Warning • Warning Notice • Education	• Pollutant exposure, • Evidence of a historical pollutant discharge, or • A stated business practice that has a potential to pollute the storm drain system
2 – Minor Violations	• Notice of Violation	• Active non stormwater pollutant discharge or • Unresolved Level 1 violations
3 – Major Violations	• Administrative Penalties • Cost Recover	Gross violation of the stormwater ordinance that cannot be resolved through a Warning Notice or NOV. • Pattern of non-compliance after issuance of a NOV with repeat violations; • Failure to adequately address previous violations or notice; and/or • Directly discharging hazardous waste into the storm drain system
4 – Legal Action with Referral	• Legal Action • Referral to State and Federal Agencies	• Inadequate measures to satisfy Level 3 • Stormwater violation posing an imminent threat to human health and/or the environment

Attachment 3

Attachment 3

Enforcement Response Plan Inspection Report Terminology Review

ERP Inspection Report Terminology	ERP	Comments
Enforcement Level – None Ineffective BMPs requires a verbal recommendation and an office inspection report. No compliance time because ineffective BMPs are not considered violations.	Pollutant exposure requires a Level 1 enforcement action.	Ineffective BMPs can potentially lead to an active discharge if appropriate BMPs are not deployed.
Level 1 – Potential Discharge 30-days to comply	Inspector may conduct one or more follow-up inspections to ensure abatement of discharges within ten business days and may schedule the facility for routine inspection and/or require a response from the discharger to confirm corrective actions have been implemented during a 30-day period.	All issues need to be resolved in a timely manner with the goal of correcting them before the next rain event but no longer than 10 business days after the violations are discovered.
Level 2 – Illicit Discharge Within 10 days or before the next rain event to comply.	Illicit discharges and sites that failure to comply with Level 1 enforcement trigger Level 2 enforcement and subject to timely corrective action and follow-up inspection with 10 business days for major violations and 30 days for minor violations.	Active non-stormwater pollutant discharges must be abated immediately. Timelines can be established for more permanent solutions.
Level 3 – Illicit Discharge Within 10 days or before the next rain event to comply.	All violations will be corrected before the next rain event but no longer than 10 business days after the violations are discovered.	

Attachment 4

Contra Costa County Compliance Inspection – Review of Environmental Health's Inspection Forms

Facility	Address	Inspection Date	Compliance Status	Abated?	Other	Enforcement Action	Date of Anticipated Re-inspection	Date of Re-inspection
7 Eleven	5884 Pacheco Blvd Pacheco	1/14/11	SW01 & SW03 Minor, SW10 Major	SW01 Lids	Michelle Dimaggio of Food Program with do a follow-up inspection within 24/ hours	Education	1/27/11	2/8/11
7 Eleven	5884 Pacheco Blvd Pacheco	2/8/11	SW01 & SW03 Minor, SW10 Major	Stated for each violation "Violation not corrected/abated".			2/22/11	2/22/11
7 Eleven	5884 Pacheco Blvd Pacheco	2/22/11	SW03 Minor	SW01 and SW10 abated but not SW03	Locks on bins.			
Appian Food and Liquor	4247 Appian Way El Sobrante	10/22/10	SW02 Major SW03 Minor		Leaking dumpster.	Education	11/5/10	11/5/10
Appian Food and Liquor	4247 Appian Way El Sobrante	11/5/10		Yes.				
Bank Club	2344 Willow Pass Rd Bay Point	12/16/10	SW01 Minor	Yes		Education		
Blackhawk Grille	3540 Blackhawk Plaza Danville	12/13/10	SW02 Major SW03 Minor			Education	12/27/10	2/15/11
Blackhawk Grille	3540 Blackhawk Plaza Danville	2/15/11	SW03 Minor	SW02, leaking dumpster abated.	Trash around the dumpster.	None		
Central Food	4352 Appian Way El Sobrante	2/3/11	SW09 & SW11 Major		Both stated business practices.	Education	2/18/11	2/18/11
Central Food	4352 Appian Way El Sobrante	2/18/11		Yes	Manager said it has changed its business practices.			
Colusa Market	406 Colusa Ave Kensingtom	12/15/10	SW09 & SW10 Major		Both stated business practices.	Education	12/28/10	1/4/11

Facility	Address	Inspection Date	Compliance Status	Abated?	Other	Enforcement Action	Date of Anticipated Re-inspection	Date of Re-inspection
Colusa Market	406 Colusa Ave Kensington	1/4/11		Yes	Owner said it has changed its business practices.			
Don Jose's Restaurant	3168 Danville Blvd Alamo	2/9/12	SW04, SW05, & SW10 Minor	No	No direction to clean up grease and near the tallow bin.	Education		
Draeger's Supermarket	4100 Blackhawk Plaza Danville	2/15/11	SW10 Major		Ice with food particles dumped outside and melting into the storm drain.	Education	3/2/11	3/4/11
Draeger's Supermarket	4100 Blackhawk Plaza Danville	3/4/11		Yes	Saw ice being disposed of inside.			
Dutch Pride Dairy	3215 Willow Pass Rd Bay Point	11/1/10	SW11 Major		Stated business practice.	Education	11/15/10	11/19/10
Dutch Pride Dairy	3215 Willow Pass Rd Bay Point	11/19/10		Yes	Owner said it has changed its business practices.			
El Grullense #2	2135 B Willow Pass Rd	4/23/12	SW01, SW02, & SW04 Minor	No.	Told rep to call to replace dumpster with holes and wash dumpster area into garbage area natural soil next to	Education		
Hop Sings Kitchen	5868 Pacheco Blvd Pacheco	1/13/11	SW01, SW03, & SW04 Minor SW10 Major	SW01 Lids	Michelle Dimaggio of food program said she would do a follow-up inspection w/in 24 hours	Education	1/27/11	

Facility	Address	Inspection Date	Compliance Status	Abated?	Other	Enforcement Action	Date of Anticipated Re-inspection	Date of Re-inspection
IL Pavone Restaurant	2291 Olympic Blvd Walnut Creek	2/10/12	SW11 Major	No.		None	2/21/12	
JK Troys Club	642 1st St Rodeo	12/17/10	SW11 Major		Stated business practice.	Education	1/4/11	1/4/11
JK Troys Club	642 1st St Rodeo	1/4/11		Yes	Manager said it has changed its business practices.			
Complaint Lawrences Meat Co	225 Alamo Plaza Alamo	2/11/10	SW09 & SW11 Major		Both stated business practices	Education	2/26/11	2/26/11
Lawrences Meat Co	225 Alamo Plaza Alamo	2/26/10	SW01, SW03, & SW10 Minor	Yes.	Saw employee leave dumpster lid open. Trash & accumulation of liter are in shared area. Owner said it has changed the other business practices.			
Los Panchos	5872 Pacheco Blvd Pacheco	1/13/11	SW01 & SW03 Minor, SW10 Major	SW01 Lids	Michelle Dimaggio will conduct a follow-up inspection within 24 hours.	Education	1/27/11	2/8/11
Los Panchos	5872 Pacheco Blvd Pacheco	2/8/11	SW01 & SW03 Minor, SW10 Major	No.	Same issues as previous inspection.		2/22/11	2/22/11
Los Panchos	5872 Pacheco Blvd Pacheco	2/22/11	SW03 Minor	SW01 and SW10 abated.	Still some debris and litter.			

Facility	Address	Inspection Date	Compliance Status	Abated?	Other	Enforcement Action	Date of Anticipated Re-inspection	Date of Re-inspection
Maria Murphy Elementary School	4350 Valley View Rd El Sobrante	3/9/11	SW01 Minor SW11 Major		Dirty bucket of water sitting on top of drain. Staff said water usually gets dumped in the street or storm drain	Education	3/23/11	3/23/11
Maria Murphy Elementary School	4350 Valley View Rd El Sobrante	3/23/11		Yes	"Violations abated"			
Maria Murphy Elementary School	4350 Valley View Rd El Sobrante	4/25/12	SW01 & SW03 Minor	No.	A different staff at the school	Education		
Mi Tierra Super Mercado	3005 Willow Pass Rd Baypoint	3/16/11	SW01, SW04 & SW05 Minor, SW11 Major			Education	3/30/11	3/30/11
Mi Tierra Super Mercado	3005 Willow Pass Rd Baypoint	3/30/11		"All violations have been corrected."				
Mingles Pizza	5860 Pacheco Blvd Pacheco	1/13/11	SW01 & SW03 Minor, SW10 Major			Education	1/27/11	2/8/11
Mingles Pizza	5860 Pacheco Blvd Pacheco	2/8/11	SW01 & SW03 Minor, SW10 Major		Seems similar to previous inspection.		2/22/11	2/22/11
Mingles Pizza	5860 Pacheco Blvd Pacheco	2/22/11	SW03 Minor	SW01 & SW10 abated.	SW03, garbage still remains on Creek.			
Mis Amigos Meat Market	3005 Willow Pass Rd Baypoint	4/24/12	SW01 & SW06 Minor	No.	Told facility to clean light collection of oily residue in dumpster area.	Education		
Mis Amigos Meat Market (Mi Tierra)	3005 Willow Pass Rd Baypoint	6/1/11						

Facility	Address	Inspection Date	Compliance Status	Abated?	Other	Enforcement Action	Date of Anticipated Re-inspection	Date of Re-inspection
My Liquors	3168 Danville Blvd Danville	1/10/11	SW11		Saw an unknown pipe protruding from an outside exterior wall. Could not determine where it was coming from. Referred to Charmain.	Education		
Nantucket Rest	1 Port St Crockett	3/10/11	SW01 Minor, SW09 Major		Hosing of dumpster area was a stated business practice.	Education	3/24/11	3/25/11
Nantucket Rest	1 Port St Crockett	3/25/11		Yes				
Nations Giant Hamburgers	16396 San Pablo Ave San Pablo	12/10/10	SW05 Minor, SW09 & SW11 Major		SW09 & SW11 are both stated business practices.	Education	1/5/11	1/7/11
Nations Giant Hamburgers	16396 San Pablo Ave San Pablo	1/7/11		Yes.				
Noodle House	452 Appian Way, A1 El Sobrante	4/14/11	SW02 & SW11 Major SW10 ?	Yes.	SW11 is a stated business practice.	Education	4/28/11	4/29/11
Noodle House	452 Appian Way, A1 El Sobrante	4/29/11		Yes.	Inspector called the power washing service and had them fax a copy of the invoice.			
Starbucks Coffee	3225 Danville Blvd	10/17/10	SW01 Minor			Education		
Complaint Tacos El Grullense/Mobile Truck	Bayview Rd & Willow Pass Rd Bay Point	1/15/10	SW10 & SW11 Major		SW10 is a stated business practice for mop water. SW11 is leaking wastewater.	Cease & Desist	1/22/10	1/27/10
Complaint	Bayview Rd &	1/27/10	SW10 &	Yes.	Another employee		2/10/10	2/10/10

Facility	Address	Inspection Date	Compliance Status	Abated?	Other	Enforcement Action	Date of Anticipated Re-inspection	Date of Re-inspection
Tacos El Grullense/Mobile Truck	Willow Pass Rd Bay Point		SW11 Major		stated that they dump mop and wastewater at nearby car wash or at El Grullense nearby. Commissary is located in Santa Rosa. Unclear why violations.			
Complaint Tacos El Grullense/Mobile Truck	Bayview Rd & Willow Pass Rd Bay Point	2/10/10			Spoke with owner and owner said all washwater and wastewater dumped at commissary in Santa Rosa.			

Attachment 5

Contra Costa County Compliance Inspection – Review of Environmental Health's Inspection Forms

Facility	Address/Site ID	Inspection Date	Compliance Status	Abated?	Comments	Enforcement Action	Corrected Action Due Date	Date of Re-inspection
AG Schwartz Trucking Co	728561	3/24/10	SW10, Class II	Unclear, no file review	Needs NOI. Excellent observations but requirement becomes recommendation. Charmaine notes state there was follow up on 4/1/10	Notice to Comply	4/24/10	Charmaine 's list says 4/1/10
Airgas NCN	1825 Arnold Industrial Way Concord	1/28/11	BMP 7, Recommended		Dumpster lid open. No violation observed checked.			
Alamo Chevron	3177 Danville Blvd	2/22/11	BMP 6		Begin documenting SW training. No violation observed checked.			
AP Truck Salvage	561 Gertrude Ave, W Richmond	2/23/11			Excellent observations			
AT&T Mobility	3467 Collins Ave	1/14/11						
Bay Area Fuel & Supplies	4069 San Pablo Dam Road El Sobrante	2/2/11						
Blackhawk County Club	599 Blackhawk Club Dr Danville	1/27/11	BMP 7, Recommended		Waddles around storm drains because of dirt stored in parking lot.			
Bridgehead Marine Services	770931	5/5/10	SW11, Class II	Unclear, no file review	NO SWPPP.		6/4/10	
Bulldog Gas & Power	890 Waterbird Way Martinez	6/8/11			Follow up to 5/18/11 inspection and 6/3/11 emailed corrected actions.			
C&J Fencing	18120 Bollinger Canyon Road, Bldg 3	6/11/10	Illicit Discharge		Reports And a bill that looks like cost recovery.			

Facility	Address/Site ID	Inspection Date	Compliance Status	Abated?	Comments	Enforcement Action	Corrected Action Due Date	Date of Re-inspection
C&J Fencing	18120 Bollinger Canyon Road, Bldg 3	12/9/11						
Caliente Harbor	1550 Taylor Road	5/27/10	SW09, Minor BMP 1	Unclear, no file review			6/27/10 and 6/2/10	
Caliente Isle Yacht Club	1550 Taylor Rd, Bethel Island	2/1/11						
CCC Central Fleet Services	772169	2/26/10	SW07, Minor SW09, Class II BMP 7, Recommended	Yes.	13 items require corrective actions. Materials & containers not stored properly.		3/29/10 3/12/10	Fleet manager sent an email on 3/9/10 addressing the corrective actions due 3/12/10. Re-inspection on 3/25/10.
CCC Central Fleet Services	772169	3/25/10						
CCC Central Fleet Services	772169	6/8/11						
CCC Central Fleet Services	772169	2/23/12						
CCC Fueling Station	2471 Waterbird Way Martinez	2/26/10	SW07, Minor BMP 7, Recommended		Two tasks required corrective actions. Unclear what is BMP 7.		3/29/10	3/25/10
CCC Fueling Station	2471 Waterbird Way Martinez	3/8/10		Unclear. Memo says new trash cans with hinged lids have been ordered.	Memo with timeline and pictures showing compliance			

Facility	Address/Site ID	Inspection Date	Compliance Status	Abated?	Comments	Enforcement Action	Corrected Action Due Date	Date of Re-inspection
CCC Fueling Station	2471 Waterbird Way Martinez	3/25/10		Yes				
CCC Public Works	772598	3/2/10	SW09, Minor BMP 7 Recommended	Yes	Excellent observations. A detail list of recommendations that need to be done.		4/1/10	Sent memo dated 3/17/10 stating that all corrective actions have been done. 3/19/10
CCC Public Works	772598	3/19/10						
CCC Public Works	772598	6/8/11						
CCC Public Works	772598	2/22/12						
CCC Public Works Maint Div	845 Brookside Richmond	3/2/10	SW09, Minor				4/1/10	Charmaine 's list said followed up on 4/1/10
CCC Public Works Maint Div	845 Brookside Richmond	2/22/11						
CM Forr Metal Construction	18311 Bollinger Canyon Rd, San Ramon	9/27/10			Excellent observations. Stated “Inspection unannounced”			

Facility	Address/Site ID	Inspection Date	Compliance Status	Abated?	Comments	Enforcement Action	Corrected Action Due Date	Date of Re-inspection
Colortime Growers	2206 Central St Richmond	5/26/11	SW04, Class I		Dumping of 3-4 stories of soil by "Your Soil Solution". Property owner and Colortime notified County agencies when dumping started. Whatever happened to the soil?			
Colortime Growers	2206 Central St Richmond	1/20/12						
Contra Costa County Animal Services	773122	3/30/10	SW07, Minor		Bleach and Germicide stored outdoors not in containment.		4/30/10	7/14/10
Contra Costa County Animal Services	4800 Imhoff Pl Martinez	7/14/10		Yes				
Contra Costa Water District	19430 Vasco Road	9/8/10						
Contra Costa Water District	Hwy 4 & Discovery Bay	9/8/10						
Custom Decorators	110 2nd Ave S, #B	1/31/11						
Deal Autowreckers	400 W Gertrude Ave Richmond	11/21/11	SW12, Minor and BMP 1, 3, & 4 Recommended		No analyses; Inspect and take care of auto fluids being released by cars; Oil staining on ground; Contain oil near dismantling pad	Notice to Comply	12/21/11	

Facility	Address/Site ID	Inspection Date	Compliance Status	Abated?	Comments	Enforcement Action	Corrected Action Due Date	Date of Re-inspection
Diablo Boat Works	772100	3/24/10	SW10, Class II	Yes, unclear when	Needs NOI. Excellent observations but requirement becomes recommendation and no compliance date	Notice of Violation		
Enterprise Roof Service Inc	2400 Bates Ave Concord	1/24/11	BMP 1 and 6, Recommended.		Store tools & equipment under cover when not being used; store empty buckets upside down; staff training.			
Ernie's Plumbing	3795 Pacheco Blvd Martinez	2/25/10	SW07, Minor	3/15/10	Cover dirt pile; clean SD area and maintain. Instruction for response by		3/29/10	3/17/10
Ernie's Plumbing	3795 Pacheco Blvd Martinez	3/17/10			Email from owner stating corrective actions have been implementing. Reinspection.			
Golden Gate Moving and Storage	770969	3/9/10	SW04, Minor		Consider cleaning and preventing rain from entering secondary containment for waste oil storage area		4/9/10	
Golden Gate Moving and Storage	770969	7/13/10	SW04, Class II	Yes	Used Oil Containers		7/30/10	1/21/11

Facility	Address/Site ID	Inspection Date	Compliance Status	Abated?	Comments	Enforcement Action	Corrected Action Due Date	Date of Re-inspection
Golden Gate Moving and Storage	770969	1/21/11			Follow up to 7/13/10. Remove from inspection; storage activities are in covered warehouse.			
Hauling Pros	73 So Buchanan	5/3/10		Verified BMP 1 & 3 from previous inspection. Charmaine's list says it was inspected 4/19/10.				
Miracle Auto Body	1075 Boulevard Way Walnut Creek	3/12/10	BMP 1, Recommended		Air compressor under makeshift covers has oil drips. Repair cover.		4/12/10	Charmaine 's list says 3/16/10
Performance Autoworks	3660 Pacheco Blvd Martinez	1/24/11	SW04, Class II	Yes, 1/24/11	Facility washes cars. Unclear if stated business practice.			
Pinole-Rodeo Autowreckers	700 Parker Ave Rodeo	5/5/10	SW07, SW08, & SW09, Minor	Yes on 6/15/10	Poor housekeeping		TBD	6/15/10
Pinole-Rodeo Autowreckers	700 Parker Ave Rodeo	6/15/10	SW11 & SW12, Class II BMP4 & 6 Recommended		SWPP outdated; no Annual Report for 2009 and 2010 – clear violation and correction action requirements. Not in Charmaine's list.	Notice of Violation Issued on letterhead NTC for HW violations and NOV for SW violations.	7/15/10	

Facility	Address/Site ID	Inspection Date	Compliance Status	Abated?	Comments	Enforcement Action	Corrected Action Due Date	Date of Re-inspection
Complaint Pinole-Rodeo Autowreckers	700 Parker Ave Rodeo	6/30/10			Sheen leaking from property to SD. Multi-agency inspection scheduled for 9/27/11.			
Pinole-Rodeo Autowreckers	700 Parker Ave Rodeo	9/27/11	SW04, SW07, & SW09, Class II BMP1, 4, & 6 Recommended			Not complete copies		
Pinole-Rodeo Autowreckers	700 Parker Ave Rodeo	1/20/12	SW04, SW07, and SW09 Class II BMP1, 4, & 6 Recommended		Follow up to 9/27/11 inspection, extended compliance to 7/20/12; Improved from September; Run-off still leaving property; containers with auto fluids need to be closed with not in use; need more spill materials on hand	3/6/12 report states that a Notice of Violation was issued	7/20/12	
Pinole-Rodeo Autowreckers	700 Parker Ave Rodeo	3/6/12	SW04, SW07, SW09, & SW12 Class II BMP1, 3, 4, & 6 Recommended		Steadily making process	1/20 NOV still in effect	7/20/12	
R&K Industrial Products	1945 N 7th St Richmond	3/8/11	SW06, Minor		Sandblast sand accumulating on paved area uncontained.		4/8/11	
Shore Acres Auto Repair	603 Port Chicago HWY Bay Point	4/26/11	BMP 1, Recommended		Hazardous waste stored outside and not under cover.			

Facility	Address/Site ID	Inspection Date	Compliance Status	Abated?	Comments	Enforcement Action	Corrected Action Due Date	Date of Re-inspection
Tower Mart #95	1805 Willow Pass Bay Point	2/14/11	BMP 1 & BMP 5	Yes, corrected immediately, 2/14/11	Move hazardous waste drums away from top of storm drain.			
USA Shell	500 Appian Way	5/12/11	SW09 & BMP 3, Minor	6/10/11 Email	Shared dumpster has run-off going into stormdrain. Unclear who is going to investigate.		6/12/11 by letter or photo.	6/21/11
USA Shell	500 Appian Way	6/21/11						
Vargas Auto Repair	5012 E Forni Dr Concord	3/16/11	SW04, Minor		Clean-up back storage area and move or cover hazardous waste containers and oily parts. Oily water observed		4/18/11	
Vargas Auto Repair	5012 E Forni Dr Concord	3/16/11	SW04, Minor	Yes	Parts, used oil, waste antifreeze, and used oil filters stored outside uncovered.		4/18/11	4/18/11
Vargas Auto Repair	5012 E Forni Dr Concord	4/18/11						
Vargas Auto Repair	5012 E Forni Dr Concord	2/29/12	SW04, Minor and BMP 1 Recommended		Motors, engines, parts outside and uncovered. Recommend to move under cover.		3/29/12	
Woodmill Recycling Co	5595 Bryon Hot Springs Byron	7/22/10						
Woodmill Recycling Co	5595 Bryon Hot Springs Byron	1/10/11	SW10, SW11, SW12, Minor				2/10/11	

Facility	Address/Site ID	Inspection Date	Compliance Status	Abated?	Comments	Enforcement Action	Corrected Action Due Date	Date of Re-inspection
Woodmill Recycling Co	5595 Bryon Hot Springs Byron	2/14/11	SW10, SW11, SW12, Minor				Extended to 3/10/11	
Woodmill Recycling Co	5595 Bryon Hot Springs Byron	4/28/11	Denied access because no notification was made and site inspected already this year.		Talked to Region 5 and appears that NOI is not necessary.			

Attachment 6

Attachment 6

Food Services that did not have corrective actions required and/or verified in a timely manner.

Facility	Date Violations Discovered	Corrective Action Required by Date	Date Re-inspected
7 Eleven	1/14/11	1/27/11	2/8/11
Blackhawk Grille	12/13/10	12/27/10	2/15/11
Draeger's Supermarket	2/15/11	3/2/11	3/4/11
Los Panchos	1/13/11	1/27/11	2/8/11
Mingles Pizza	1/13/11	2/22/11	2/8/11
7 Eleven	2/22/11	None	None
Blackhawk Grille	2/15/11	None	None
Don Jose's Restaurant	2/9/12	None	None
Hop Sings Kitchen	1/13/11	1/27/11	None
El Grullense #2	4/23/12	None	None
Il Pavone Restaurant	2/10/12	2/21/12	None
Los Panchos	2/22/11	None	None
Maria Murphy Elementary School	4/25/12	None	None
Mingles Pizza	2/22/11	None	None
Mis Amigos Meat Market	4/24/11	None	None

Hazardous Materials that did not have corrective actions required and/or verified in a timely manner.

Facility	Date Violations Discovered	Corrective Action Required by Date	Date Re-inspected
AG Schwartz Trucking Co	3/24/10	4/24/10	None
Airgas NCN	1/28/11	None	None
Alamo Chevron	2/22/11	None	None
Blackhawk County Club	1/27/11	None	None
Bridgehead Marine Services	5/5/10	6/4/10	None
Caliente Harbor	5/27/10	6/27/10 and 6/2/10	None
CCC Public Works Maint Div	3/2/10	4/1/10	None
Contra Costa County Animal Services	3/30/10	4/30/10	7/14/10
Deal Autowreckers	11/21/11	12/21/11	No inspection form but the "CCC C.4 SW Inspections PY 2011-12 (1st half HaxMat)" says it was inspected on 11/23/11.
Ernie's Plumbing	2/25/10	3/29/10	3/17/10
Enterprise Roof Service Inc	1/24/11	None	None
Golden Gate Moving and Storage	3/9/10	4/9/10	7/13/10
Golden Gate Moving and Storage	7/13/10	7/30/10	1/21/11
Miracle Auto Body	3/12/10	4/12/10	None
Pinole-Rodeo	5/5/10	None	6/15/10
Pinole-Rodeo	6/15/10	7/15/10	9/27/10
Pinole-Rodeo	9/27/11	Unclear because records only include 1 page for the inspection	1/20/12
Pinole-Rodeo	1/20/12	Continuation of 9/27/11 violations. Extended compliance to 7/20/12	3/6/12
Pinole-Rodeo	3/6/12	Checking on progress of corrective actions. Compliance is still set for 7/20/12	
R&K Industrial Products	3/8/11	4/8/11	None
Shoe Acres Auto Repair	4/26/11	4/26/11	None
Vargas Auto Repair	3/16/11	4/18/11	None
Vargas Auto Repair	2/29/12	3/29/12	None
Woodmill Recycling Co	1/10/11	2/10/11	None

Attachment 7

Attachment 7

Food Services

Facility	Inspection Date	Type of Violations	Enforcement Action Taken	Reinspection Date	Comments
7 Eleven	1/14/11	SW01 & SW03 Minor SW10 Major	Education	2/8/11	None of the violations were corrected. No enforcement action was taken. In such cases, the County's ERP directs issuance of a Notice of Violation.
7 Eleven	2/22/11	SW03 Minor	None		No further records of follow-up inspections to verify that corrective actions have been implemented.
Appian Food and Liquor	10/22/10	SW02 Major SW03 Minor	Education	11/5/10	Leaking dumpster.
Blackhawk Grille	12/13/10	SW02 Major SW03 Minor	Education	2/15/11	Leaking dumpster
Draeger's Supermarket	2/15/11	SW10 Major	Education	3/14/11	Ice with food particles was dumped outside and melting into the storm drain. No enforcement action was taken. In such cases, the County's ERP directs issuance of a Notice of Violation. Active non-stormwater pollutant discharges must be directed to cease immediately and inspectors should ensure that such discharges cease immediately or as soon as possible.
Hop Sings Kitchen	1/13/11	SW01, SW03, & SW04 Minor SW10 Major	Education		No further records of follow-up inspections to verify that corrective actions have been implemented.
IL Pavone Restaurant	SW11 Major		Education		No further records of follow-up inspections to verify that corrective actions have been implemented.
Los Panchos	1/13/11	SW01 & SW03 Minor, SW10 Major	Education	2/8/11	Violations are the same for both inspections. No escalation of enforcement was initiated during re-inspection. In such cases, the County's ERP directs escalation of enforcement to Level 2.
Mi Tierra Super Mercado	3/16/11	SW01, SW04 & SW05 Minor, SW11 Major	Education		
Mingles Pizza	1/13/11	SW01 & SW03 Minor, SW10 Major	Education	2/8/11	Violations are the same for both inspections. No escalation of enforcement was initiated during re-inspection. In such cases, the County's ERP directs escalation of enforcement to Level 2.

Attachment 8

Attachment 8

Hazardous Materials

Facility	Inspection Date	Type of Violations	Enforcement Action Taken	Reinspection Date	Comments
Bridgehead Marine Services	5/5/10	SW11 Class II	None		
Caliente Harbor	5/27/10	SW09 Minor, BMP 1	None		
CCC Central Fleet Services	2/26/10	SW07 Minor, SW09 Class II, BMP 7 Recommended	None	2/8/11	13 items needed corrective actions.
CCC Fueling Station	2/26/10	SW07 Minor, BMP 7 Recommended	None	3/25/10	
CCC Public Works	3/2/10	SW09 Minor, BMP 7 Recommended	None	3/19/10	
CCC Public Works Maint Div	3/2/10	SW09 Minor	None		
Contra Costa County Animal Services	3/30/10	SW07 Minor	None	7/14/10	
Enterprise Roof Service Inc	1/24/11	BMP 1 & 6 Recommended	None		
Ernie's Plumbing	2/25/10	SW07 Minor	None	3/17/10	
Golden Gate Moving & Storage	3/9/10	SW04 Minor	None	7/13/10	
Golden Gate Moving & Storage	7/13/10	SW04 Class II	None	1/21/11	
Miracle Auto Body	3/12/10	BMP 1 Recommended	None		
Performance Autoworks	1/24/11	SW04 Class II	None	1/24/11	
Pinole-Rodeo Autowreckers	5/5/10	SW07, SW08, & SW09 Minor	None	6/15/11	
Pinole-Rodeo Autowreckers	9/27/11	SW04, SW07, & SW09 Class II, BMP 1, 4, & 6 Recommended	Unclear		Continuation Sheet is not available, even in the files from Haz Mat.
Pinole-Rodeo Autowreckers	1/20/12	SW04, SW07, & SW09 Class II, BMP 1, 4, & 6 Recommended	3/6/12 Inspection Report states that an NOV was issued.		Compliance date extended to 7/20/12
Pinole-Rodeo Autowreckers	3/6/12	SW04, SW07, & SW09 Class II, BMP 1, 3, 4, & 6 Recommended			
USA Shell	5/12/11	SW09 & BMP 3 Minor	None	6/10/11 Email 6/21/11 Re-inspection	
Vargas Auto Repair	3/16/11	SW04 Minor	None	4/18/11	
Vargas Auto Repair	2/29/12	SW04 Minor, BMP 1 Recommended	None		

Attachment 9

Attachment 9

Provision C.6. – Examples of Inspection Forms Not Filled Out Completely

- Alamo Creek Swim Center: This site had three inspection forms filled out. All three forms do not show 1) if the project disturbs one acre or more of land or if it is a high priority site; 2) the current weather; and 3) has there been rainfall with runoff since last inspection.
- El Rincon – The Resolution section on the October 10, 2011 inspection form is not filled out.
- La Colina Estates – Inlet filters needed attention at the October 27, 2011 inspection. The inspector noted "Contractor is in the process of cleaning up the site." The comment seems to imply that there were bigger issues than inlet filters needing maintenance.
- Pedestrian Bridge – This site had two inspection forms filled out. For the October 17, 2011 inspection, the form is dated September 29, 2011.
- San Pablo Medical Center – This site had eight inspection forms filled out. All eight forms show a riparian area barrier violation and that the earth dikes/drainage swales need attention. They also all show that no enforcement actions were taken because the site was in compliance. None of the forms indicate whether there has been rainfall with runoff since the last inspection.
- South Ave. & Regent Place Frontage Improvements – A sediment control issue was discovered during the October 11, 2011 inspection. A Notice of Violation was issued. The Resolution section is not completely filled out. The Date Problem Resolved needs to be filled in. The inspector returned the next day, October 12, 2011. The inspection form indicates that another Notice of Violation was issued. The comments provided for this inspection date seem to imply that the issue was resolved. Perhaps another Notice of Violation was not issued on October 12, 2011.
- South Ave. & Regent Place Frontage Improvements – A sediment control issue was discovered during the January 12, 2012 inspection and a Notice of Violation was issued. The Enforcement and Follow-Up section states that the problem was first identified on September 29, 2011. Furthermore, the Resolution section shows that the problem was resolved on October 1, 2011. The Notice of Violation and Problem Fixed boxes continue to be checked on the February and March inspection forms.
- Subdivision 8969/9246 – This site had three inspection forms filled out. All three forms show an earth dikes/drainage swales need violation and that the riparian area barrier needs attention. They also all show that no enforcement actions were taken because the site was in compliance.
- Since Water Board staff did not ask to see copies of Notice of Violations, it is uncertain if the inspection form serves as an enforcement action that is given to the contractor. The County must give a compliance date for the required corrective actions in its enforcement actions. The Enforcement and Follow-up section of the inspection form has a space to fill in the next follow up inspection date. Of the four violations noted in the inspection forms, only LaColina Estates was given a compliance date in the inspection form. El Rincon's October violation was not given a compliance date. South Ave. & Regents Place Frontage Improvements' violations in September, October, and January were not given compliance dates.

Attachment 10

Attachment 10

Provision C.6.

The tracking data table does not match the County's 2011-2012 Annual Report in the following areas:

Required Information	Annual Report	Tracking Data
# of high priority sites	4	3[a]
# of sites disturbing ≥ 1 acre of land	29	19
# of inspections	186[b]	114[c]
# of Erosion Control Problems	3	27
# of Run On & Run Off Problems	1	0
# of Sediment Control Problems	24	26
# of Good Site Management Problems	10	0
# of Level 1 enforcement actions	25	4
# of Level 2 enforcement actions	3	6
# of illicit discharges	2	10[d]

[a]The inspection forms indicate EBRPD Roadway Repair, Oakmont Memorial Park Cemetery, and Subdivision 8984 were all high priority sites and they all also disturbed one or more acre of soil. High priority designations are for sites disturbing less than one acre of soil.
[b]According to the discussions in the Annual Report, this number represents only inspections of high priority sites and sites disturbing one or more acre of land.
[c]This number represents the number of entries in the tracking data table, which matches the number of inspection forms. If we took out the inspections for the three sites disturbing less than one acre (lots on Warren Rd., MS 03-0028 Bay View Avenue, and Alamo Creek Swim Center), there were 100 inspections for the year.
[d]The tracking data shows that all the inspections at LaColina Estates (2 inspections) and Multi-Family Apartment Complexes (8 inspections) had evidence of an illicit discharge. But only the inspection forms for Multi-Family Apartment Complexes had the illicit discharge box marked.

Attachment 11

Belmont Terrace – KB Homes
5-17-11

No stabilized construction entrance. Dirt being tracked out into the street.

Dirt piled on top of unprotected storm drain.

Evidence of historical illicit discharge..

Gale Ranch – Shapell's Tessera
5-17-11

Grading was complete in this area. Framing , inside work, and finishing of lots were the primary activities. The site appeared to be implementing good construction site controls. County inspectors explained that Shapell has the manpower to adequately oversee its jobsites , look into innovative BMPs, and ensure implementation of timely and proper erosion and sediment controls.

Above, erosion control fabric is used to cover up dirt in the trailer area and used to stabilized the construction entrance. To the right, contractors laid down plastic to move sand across the street.

Windemere – Hurley Construction
5-17-11

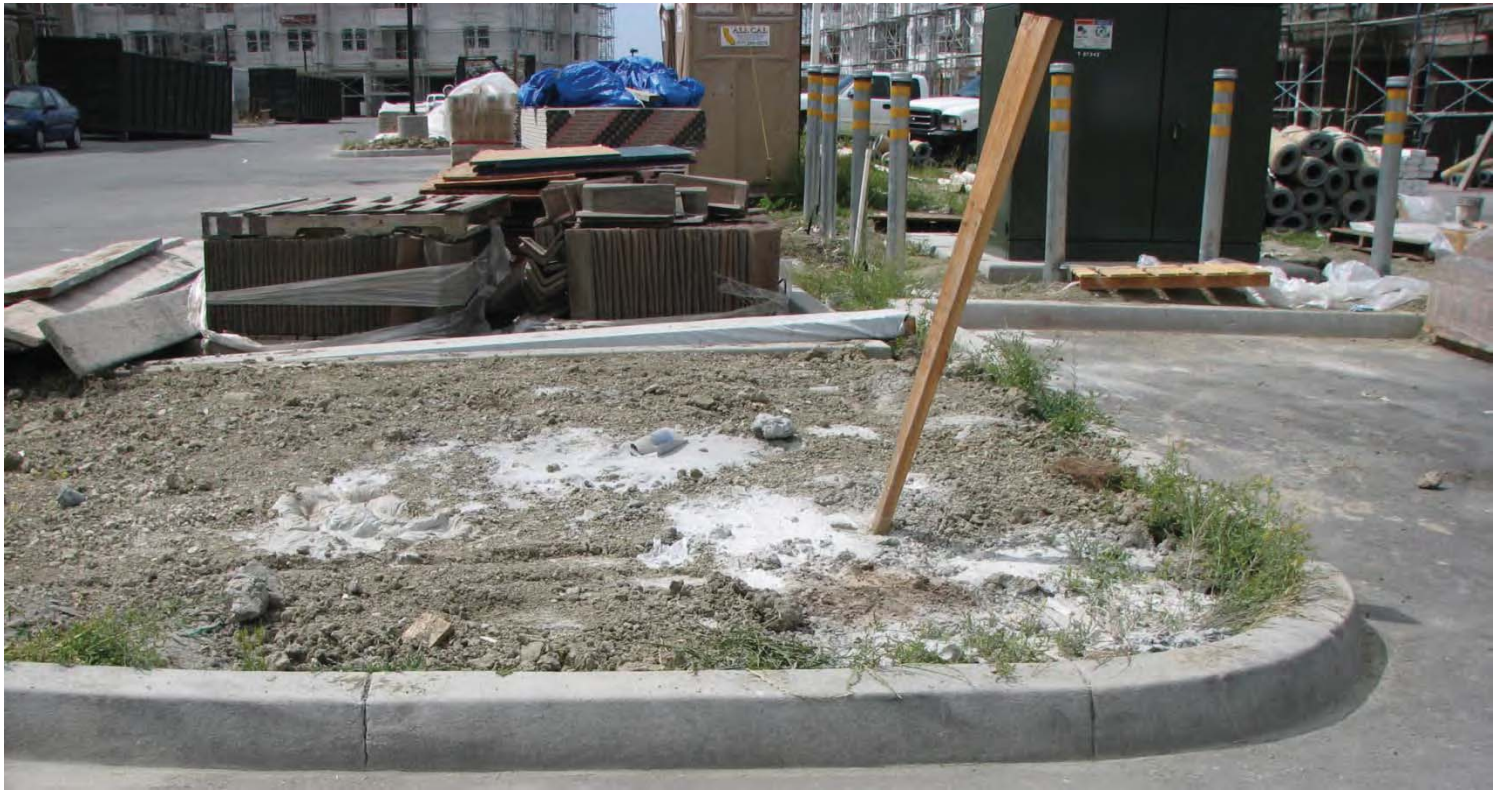

Grading was complete. Framing , inside work, and finishing of lots were the primary activities.
Water Board inspectors found inappropriate disposal of construction waste.

Grading was complete in this area. Framing , inside work, and finishing of lots were the primary activities. The parking lot had sediment and dust issues.

California Regional Water Quality Control Board
Santa Ana Region

Linda S. Adams
Secretary for Environmental Protection

3737 Main Street, Suite 500, Riverside, California 92501-3348
Phone (951) 782-4130 • FAX (951) 781-6288 • TDD (951) 782-3221
www.waterboards.ca.gov/santaana

Arnold Schwarzenegger
Governor

May 24, 2010

Mr. Patrick Glover, City Manager
City of Chino
13220 Central Avenue
Chino, CA 91710-4127

CERTIFIED MAIL
RETURN RECEIPT REQUESTED

NOTICE OF VIOLATION OF THE AREAWIDE URBAN STORM WATER RUNOFF PERMIT FOR SAN BERNARDINO COUNTY AND THE INCORPORATED CITIES, NPDES PERMIT NO. CAS618036, ORDER NO. R8-2010-0036 (MS4 PERMIT)

Dear Mr. Glover:

On May 11, 2010, Regional Board staff conducted a focused program evaluation of your municipal corporate yard located at 5050 Schaefer Avenue, Chino. Staff was accompanied by Don Allinder and Ruben Valdez, NPDES Coordinator and Environmental Technician for the City, respectively. The purpose of the evaluation was to ensure that the City has addressed the deficiencies and violations identified during the 2006 audit of the corporate yard. Please note that other MS4 program elements were not evaluated during this field inspection.

During the evaluation, Regional Board staff observed that most of the deficiencies identified during the 2006 audit have been corrected. However, some new and continuing violations were noted during the yard inspection. Overall, it appears that the City of Chino has not fully implemented Best Management Practices (BMPs) to reduce the discharge of pollutants from its municipal facilities and activities to the maximum extent practicable. This may be a violation of the MS4 Permit. The following is a list of observations during the May 11, 2010 inspection that support the alleged violations:

1. Slopes along the south and west perimeters of the Police Department's impounded vehicle storage area are not stabilized (Photo #1). It appears that sediments from these slopes could be easily washed onto the gravel driveway and then either tracked or washed onto Fourth St. through the yard exit.

2. Staff observed that two (2) salvage drums and a 500-gallon aboveground tank were stored at the southeast corner of the Household Hazardous Waste (HHW) collection area without any secondary containment (Photo #2). Also, two (2) additional salvage drums were observed inside a drip pan that did not have sufficient secondary containment capacity (Photo #3).

3. Since the 2006 audit, a canopy has been constructed over the HHW collection area, which covers most of the electronic wastes and other waste materials stored in the area. However, there is no berm around the perimeter of the HHW collection area to prevent the discharge of waste oils and other stored materials from accidental spills or leaks (Photo #4).

4. Miscellaneous bulk materials (including mulch, green waste, top soil, concrete, asphalt, etc.) were stockpiled in the storage bays without any control measures (Photo #5). These materials could easily be wind-blown, tracked offsite, or discharged along with storm water runoff from the site. Mr. Allinder stated that the City would implement appropriate BMPs to prevent these materials from being carried offsite. In addition, the majority of the northwest corner of the yard is not paved. Appropriate control measures should be implemented to prevent sediment discharges from the area and soil contamination of the area.

5. Sediment tracking was observed in the northeast portion of the yard, leading to the yard entrance driveway (Photo #6). It appears that the broom sweeper, which the City usually uses to clean the yard, has failed to recover the sediments. Mr. Allinder stated that the City would start using a vactor truck to remove the fine sediments.

6. A sandbagger with greasy parts was observed in the miscellaneous equipment and material open storage area without any cover (Photo #7). Any equipment stored in the open area should have appropriate BMPs in place to prevent leakage and/or rust from getting into the storm water.

7. Fresh oil stains were observed in the area immediately south of the open-top roll-off bins where the vactor truck, front end loader, and dump truck were parked (Photos #8 & #9). Mr. Allinder indicated that the City would examine the equipment for any leaks and implement appropriate BMPs, as needed.

8. We understand that the vehicle wash water drains directly into an onsite clarifier. However, it appears that some of the wash water could easily drain westwards onto the driveway immediately west of the vehicle maintenance shop. Mr. Allinder agreed to extend the wash pad and construct a berm/bump at the far west end of the pad in order to prevent wash water from draining onto the driveway.

9. Tack oil was observed in a few transfer buckets at the old vehicle fueling island without any lid or secondary containment (Photos #10 & #11). These buckets should be properly stored either indoors or with secondary containment and with proper lids.

10. It appears that a large area of the corporate yard drains to a discharge point at the southwest corner of the site. However, no BMPs were observed at this discharge point except for a few sandbags. Because of a lack of adequate control measures within the corporate yard, additional BMPs may be necessary at the discharge point.

11. Currently the City is only conducting annual inspection of its corporate yards. However, due to the problems noted above, Mr. Allinder has agreed to train staff to perform monthly inspection of the site, especially during the wet season.

12. The Stormwater Pollution Prevention Plan (SWPPP) is not certified and is not up-to-date. Mr. Allinder stated that the last formal review of the plan was done about three years ago. He further informed Regional Board staff that the City has discussed revision of the SWPPP but has not yet decided on a schedule for the revisions. Please note that the SWPPP should be reviewed annually and any needed changes should be incorporated. The activities at the corporate yard present a significant exposure of pollutants to storm water and the operations are considered to be similar to an industrial facility. As such, for more information about the SWPPP, please review Section A of the General Industrial Storm Water Permit at: http://www.waterboards.ca.gov/water_issues/programs/stormwater/docs/induspmt.pdf (page 26 of 79)

13. Currently, the SWPPP does not have any monitoring and sampling plans to monitor the effectiveness of the BMPs at the yard. Mr. Allinder agreed to develop a monitoring program for the site and to collect storm water samples twice a year for each discharge point. Additional information regarding the monitoring program and reporting requirements can be found in Section B of the General Industrial Storm Water Permit (see comment #12, above, for website information). We request that the monitoring report be submitted with the MS4 Permit annual report.

Please submit a schedule and program to us by June 28, 2010 indicating the actions that have been, or will be taken to bring the City into full compliance with the terms and conditions of the MS4 Permit. Failure to submit the above requested information or comply with the requested actions may result in further enforcement action.

If you have any question, please contact Kathleen Fong at (951) 774-0114, Nam Nguyen at (951) 321-4582 or Milasol Gaslan at (951) 782-4419.

Sincerely,

Michael J. Adackapara
Division Chief

cc (via email w/ enclosure):

Matt Yeager, San Bernardino County Storm Water Program Manager
Don Allinder, City of Chino NPDES Coordinator

Enclosure: Inspection Photographs (11)

CITY OF CHINO'S MUNICIPAL CORPORATE YARD LOCATED AT 5050 SCHAEFER AVENUE, CHINO
May 11, 2010

Photo #1:

Slopes along the south and west perimeters of the Police Department's impounded vehicle storage area are not stabilized. Photo taken looking northeast.

Photo #2:

Two salvage drums and a 500-gallon aboveground tank were stored at the SE corner of the HHW collection area without any secondary containment. Photo taken looking north.

Photo #3:

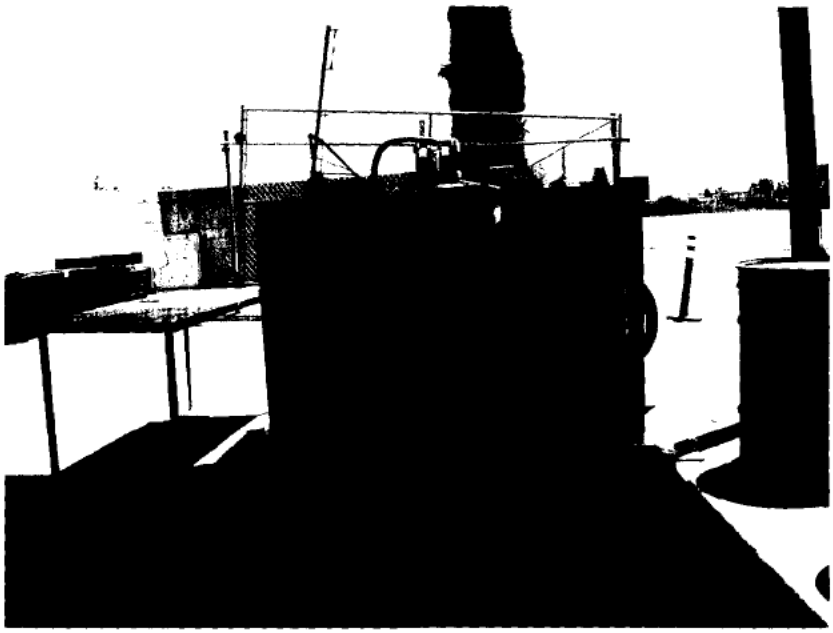

Two additional salvage drums were observed inside a drip pan that did not have sufficient secondary containment capacity. Photo taken looking east.

Photo #4:

No berm was observed around the perimeter of the HHW collection area. Photo taken looking north.

Photo #5:

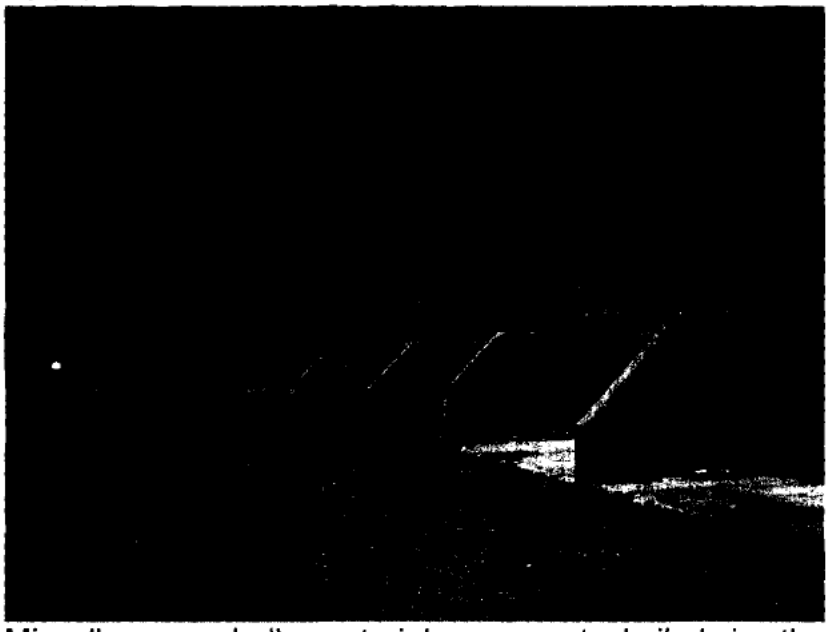

Miscellaneous bulk materials were stockpiled in the storage bays without any control measures. Photo taken looking west.

Photo #6:

Sediment tracking was observed in the NE portion of the yard, leading to the yard entrance driveway. Photo taken looking northeast.

Photo #7:

A sandbagger with greasy parts was observed in the miscellaneous equipment and material open storage area without any cover. Photo taken looking west.

Photo #8:

Fresh oil stains were observed in the area immediately south of the open-top roll-off bins. Photo taken looking north.

Photo #9:

Fresh oil stain was observed in the area immediately south of the open-top roll-off bins. Photo taken looking north.

Photo #10:

Tack oil was observed in a few transfer buckets at the old vehicle fueling island without any lid or secondary containment. Photo taken looking north.

Photo #11:

Tack oil was observed in a few transfer buckets at the old vehicle fueling island without any lid or secondary containment.

California Regional Water Quality Control Board
Santa Ana Region

Linda S. Adams
Secretary for Environmental Protection

3737 Main Street, Suite 500, Riverside, California 92501-3348
Phone (951) 782-4130 • FAX (951) 781-6288 • TDD (951) 782-3221
www.waterboards.ca.gov/santaana

Arnold Schwarzenegger
Governor

July 2, 2010

CERTIFIED MAIL
RETURN RECEIPT REQUESTED

Rod Foster, City Manager
City of Colton
650 North La Cadena Drive
Colton, CA 92324-2823

NOTICE OF VIOLATION – SAN BERNARDINO COUNTY MUNICIPAL SEPARATE STORM SEWER SYSTEM (MS4) NPDES PERMIT NO. CAS618036, ORDER NO. R8-2010-0036

Dear Mr. Foster:

On June 10, 2010, we conducted a focused program evaluation of the City of Colton's storm water program. The purpose of the evaluation was to assess the City's procedures for requiring, reviewing, approving and implementing Water Quality Management Plans (WQMPs) and to evaluate storm water management at the City's corporate yard. Other MS4 program elements have not been evaluated during this process. During this assessment, we met with Reggie Torres, Victor Ortiz and Martiza Tapia from the City.

Water Quality Management Plan (WQMP) Review:

In June 2006, we conducted an evaluation of the City of Colton's storm water program. The audit consisted of reviewing the activities of various departments within the City that were involved with the implementation of the MS4 program. A copy of the June 2006 evaluation report was transmitted to the City in September 2006. The 2006 program evaluation noted a number of program deficiencies and required the City to develop procedures for review and approval of WQMPs.

The MS4 Permit requires the City to review WQMPs for specified types of priority development projects[1]. The City was also required to develop procedures. This is a continuing requirement in the MS4 permit adopted January 29, 2010. During the evaluation in June 2006 we observed that City had not included a consideration of the impact of new development and significant redevelopment on storm water quality in its environmental review process. We also observed that the City did not have adequate procedures for review and approval of WQMPs.

During the June 10, 2010 evaluation, City staff described the comprehensive procedure that the City has developed and implemented to address the deficiencies noted during the 2006 evaluation related to the WQMPs. Under this procedure, each priority development

project[1] is required to develop a WQMP that must be approved by the Design Review Committee, Planning Commission or City Council. For the City's capital improvement projects, the preliminary WQMP is generally submitted to the Engineering Department at the 35% design stage. The WQMP is approved prior to approval of the grading plan, subdivision map or issuance of a permit whichever occurs first. City staff has developed a checklist for a comprehensive review of the WQMP. The City engaged the services of two consultants for review of the WQMP and inspections of Best Management Practices (BMPs) during the construction phase. The City provided a flow chart of the City's WQMP approval process, a summary of WQMP requirements, WQMP review checklist, Construction Inspection Report and Inspection Procedure. The City has also developed a database for recording WQMPs. We were assured that even with the recent reduction in the staff resources from four to one staff person; the City has managed its WQMP review and approval process in accordance with the established procedures.

We reviewed the following WQMPs that were approved by the City and implemented: Pacific Rail Industries, San Felipe Cantina, and Arrowhead Regional Medical Center. The BMPs identified in these WQMPs included: vegetated swales, infiltration basins and extended detention basins. Pacific Rail Industry retains storm water from a 50-year frequency storm in its storage basins and recycles the water for use in the onsite shredding processes. The WQMPs included sizing calculations, funding mechanisms for maintenance and operation of the BMPs and maintenance agreements signed by the developers which were recorded in the County Record Office upon completion of the project. The City has made significant improvements in its review and approval of the WQMP. The current WQMP review and approval processes appear to be well defined compared to the findings during the 2006 program evaluation.

Corporate Yard Inspection:

The municipal corporate yard located at 160 S. 10th Street in the City of Colton was inspected to determine how pollutant sources from the site are being addressed. We found the following violations during the June 10, 2010 inspection:

1. Oil drippings and stains were observed all over the ground. Most of the actively operating vehicles and stored vehicles waiting to be auctioned were observed leaking. There were no effective BMPs implemented to prevent and/or to control oil drippings to the ground. A few newly purchased drip pans were noted. Tractors parked at different locations were also leaking and no BMPs were implemented (see the attached photographs: 1a to 1g). Any equipment stored in the open area should have appropriate BMPs in place to prevent leakage and/or other pollutants from getting into the storm water.

---

[1] Priority development projects are those listed in Table 1-1 of the Model Water Quality Management Plan.

2. We observed an above ground tank used for storing/dispensing fuel. This tank can store 8,000 gallons of gasoline and 4,000 gallons of diesel (see Figure 2). This tank itself has a secondary containment and a containment berm around it. The fuel is dispensed outside of the secondary containment area. There are no controls in place to address spillage of fuel during the fueling operations. There was no Spill Prevention Control and Countermeasure (SPCC) Plan at the site. This tank appeared to have been constructed after the 2006 program evaluation. The fueling area does not have a canopy and drains into a storm drain located in the southeast area of the yard. The City is required to consider source control BMPs[2] for newly built fueling areas.

3. It appears that a large area of the corporate yard drains to a discharge point at the southeast corner of the site. Some gravel bags were placed around this discharge point (see Figure 3). Because of a lack of adequate control measures within the corporate yard, there is a potential for discharge of pollutants from the yard. To control these pollutants, additional BMPs may be needed at the discharge point. We suggested that the City review its current treatment devices (gravel bags and filter cloth) located at the most down gradient discharge location from the yard. The treatment devices should be capable of treating all pollutants from the yard (primarily trash, oil, petroleum products and metals). We were informed that the City has already ordered a filtering device which would be inserted into the catch basin.

4. City staff informed us that the City is planning to remove all oily stains through pressure washing. We reminded City staff that all wash water must be collected and disposed of properly.

5. Inspection records of the yard were available at the site. However, these records neither identified the oil drippings/stains nor proposed any corrective actions to eliminate potential for contact of the oil drippings/stains with storm water.

6. Training records were available for yard staff. However, the oily stains all over the ground and a lack of corrective actions indicate that staff may not have been adequately trained to control/minimize pollutants on site.

7. A Storm Water Pollution Prevention Plan (SWPPP) was available at the site. The SWPPP was not certified. The activities at the corporate yard present a significant exposure of pollutants to storm water and the operations are considered to be similar to an industrial facility. As such, for more information about the SWPPP, please review Section A of the General Industrial Storm Water Permit at: http://www.waterboards.ca.gov/water_issues/programs/stormwater/docs/induspmt.pdf (page 26 of 79)

---

[2] For example, see the BMP Guide for Retail Gasoline Outlets in the CASQA Stormwater BMP Handbook.

8. Currently, the SWPPP does not have any monitoring and sampling plans to monitor the effectiveness of the BMPs at the yard. Unless control measures are implemented to eliminate exposure of potential pollutant sources, the City must develop a sampling and monitoring program for the site and analyze storm water samples twice a year for each discharge point. Additional information regarding the monitoring program and reporting requirements can be found in Section B of the General Industrial Storm Water Permit. We request that the monitoring report be submitted with the MS4 Permit annual report.

Please submit a schedule and a program to us by July 30, 2010 describing the actions that have been, or will be taken to bring the City into full compliance with the terms and conditions of the MS4 Permit. Failure to submit the above requested information or comply with the requested actions may result in further enforcement action.

If you have any question, please contact Muhammad Bashir at (951) 320-6396 or Milasol Gaslan at (951) 782-4419.

Sincerely,

Michael J. Adackapara
Division Chief

Cc: Reggie Torres, NPDES Coordinator, City of Colton, rtorres@ci.colton,ca.us
Matt Yeager, NPDES Coordinator, San Bernardino County Flood Control District, myeager@dpw.sbcounty.gov

Enclosure: Photographs

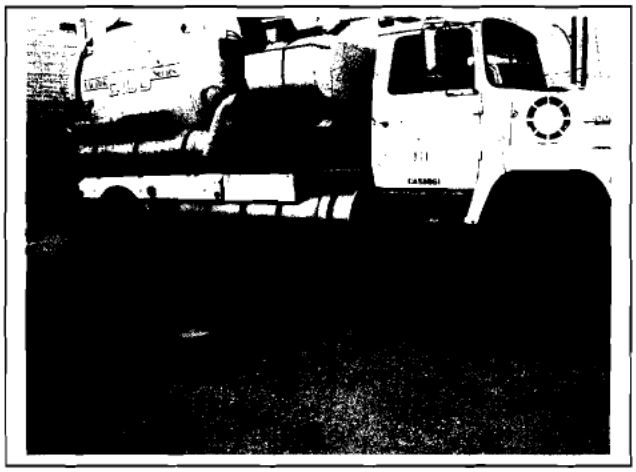

Figure 1a Oil stains on the ground

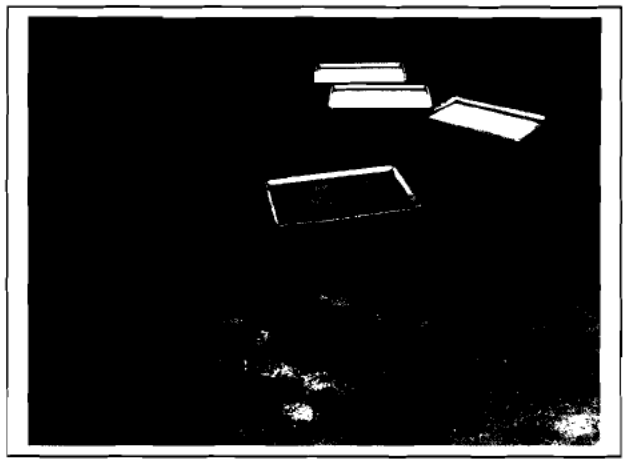

Figure 1b Oil stains on the ground

Figure1c Oil stains on the ground

Figure 1d Oil stains on the ground

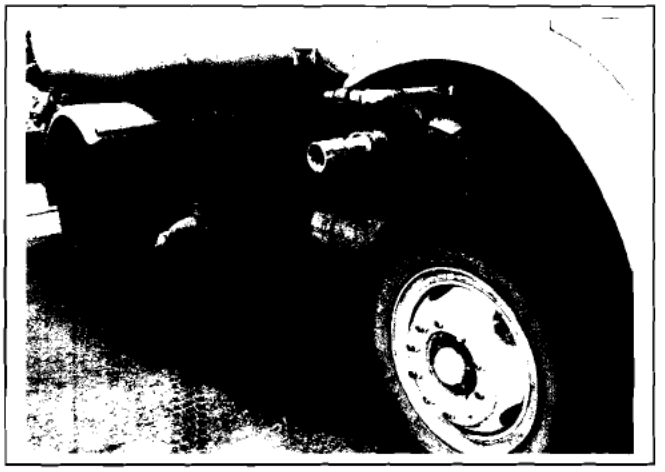

Figure 1e Oil stains on the ground

Figure 1f Oil stains on the ground

Figure 1g. Oil stains on the ground

Figure 2. Above ground tank with out canopy. Fueling area drains into a storm drain.

Figure 3: Poorly protected storm water discharge point.

California Regional Water Quality Control Board
Los Angeles Region

320 W. 4th Street, Suite 200, Los Angeles, California 90013
Phone (213) 576-6600 FAX (213) 576-6640 - Internet Address: http://www.waterboards.ca.gov/losangeles

Linda S. Adams
Acting Secretary for Environmental Protection

Edmund G. Brown Jr.
Governor

TO: Renee Purdy

CC: Samuel Unger, Deborah Smith

FROM: Ivar K. Ridgeway

DATE: May 31, 2011

SUBJECT: CITY OF COMPTON NEW DEVELOMENT/REDEVELOPMENT AND CONSTRUCTION ACTIVITIES MS4 INSPECTION

On May 18-May 20, 2011 I met with City of Compton staff Wendell E. Johnson, Public Works Director and Hien Nguyen, Assistant City Engineer to inspect the City of Compton's compliance with the Los Angeles MS4 requirements for the New Development/Redevelopment and Construction Activities programs. The inspection consisted of one day of administrative review and questions, one day of selected site inspections, and an out briefing session. As part of the inspection copies of relevant documentation were requested and photographs taken during the site inspections. A questionnaire form with the City of Compton responses, copies of requested documents, and photographs from the site inspections are included as part of this report. The following are suggestions for improvement based on the inspection findings:

1. Increased coordination between the various municipal departments, including Building and Safety, and the Planning Department, will help ensure proper implementation of post construction BMPs at all required sites.
2. Enhanced documentation storage will allow the City of Compton to more readily ensure adequate maintenance for post construction BMPs.
3. Increased dialog and record sharing between hired consultants and City staff will help ensure the City is compliant with all New Development/Redevelopment requirements.
4. The City needs to develop a system to schedule the periodic inspection of all construction sites to assure proper implementation of sediment and erosion control BMPs.
5. The City needs to develop a documentation strategy for construction site inspections independent of, or supplemental to, required building inspections.

Summary: The City of Compton appears to have made recent improvements in the implementation of New Development/Redevelopment and Construction Activities Provisions of the LA MS4 Permit. The active construction sites inspected appeared to have appropriate BMP implementation and all the projects that were required to have post construction BMPs had them present. City staff acknowledged difficulty in locating appropriate SUSMP plans for older projects, which makes verification of SUSMP maintenance difficult for older projects. Regional Board staff reaffirmed the City's recent improvement tracking of SUSMP plans as necessary to comply with Permit provisions.

Attachment: Inspection Photographs
Revised Contract Agreement
City of Compton Site Photographs
Drainage Area Maps and Photographs

City of Compton May 2011 Inspection Questions & Responses

Participating City Staff:
Wendell E. Johnson, Public Works Director
Hien Nguyen, P.E., Assistant City Engineer

Participating Regional Board Staff
Ivar K. Ridgeway, Storm Water Permitting Unit Chief

New Development and Redevelopment

Plan Review

What types of projects are required to be reviewed by the MS4 for post-construction stormwater controls? (is there a size threshold for disturbed acreage?)
The City uses a 1 acre threshold as a trigger to determine if SUSMP is required.

What types of standards or technical guidance does the MS4 use to review projects?
The City follows Los Angeles Regional Water Board standards and Los Angeles County standards. The City has a SUSMP Development worksheet (included as an attachment to this report), which is used as a guide to determine what post-construction controls must be implemented for a project, and a Public Works Plan Review Form (also included as an attachment to this report)which serves as a checklist for additional documents required for a project.

Does the MS4 condition new projects with requirements for post-construction stormwater controls?
Yes. See answer above.

Does the MS4 include any requirements for maintenance of private stormwater controls?
Yes. The City has agreements with HOAs or the Developer that must be recorded with the County or there is documentation that the City of Compton will do the maintenance.

What type of training do the plan reviewers receive?
None. At one time all plans went before a architectural Review Board composed of staff from multiple departments that would flag all specific requirements. Currently the City contracts with a consultant to do the plan review and engineering verification

How often are they trained?
N/A (see above)

Is a pre-construction site plan review conference required?
Yes. A conference is scheduled with the City and the developer after plan checker grants the final approval of plans. At that time all the pertinent requirements are discussed to ensure they are clear to the Developer.

What does this consist of?
The City goes over Water Board requirements and informs project proponents of the requirements to keep a SWPPP on site and reiterates the need to construct post construction BMPs per approved site plans.

Has the Permittee's General Plan, or any General Plan elements been updated during permit coverage?
No. Proposed changes will be incorporated at the end of 2011.

If so, describe any storm water related new development requirements that were integrated.
N/A

Describe how the permittee includes Standard Urban Storm Water Mitigation Plan design standards, or equivalent, into new development and redevelopment project approvals.
The consultant verifies proper selection and sizing of post construction BMPs which are quickly spot verified by the City Engineer based on Unit flow capacities. The City has also developed a SUSMP Plan Requirement (Included as an attachment) document that lists projects requiring post-construction controls, post control BMP sizing references, and maintenance agreement requirements.

Has the permittee made appropriate modifications to their internal planning procedures for preparing/reviewing CEQA documents?

Currently no dedicated staff has been assigned. In the past the Assistant Engineer completed the environmental documents.

Does the Permittee have any Low Impact Development requirements or any other strategies to maximize the percentage of pervious area to allow infiltration of storm runoff?
The City looks at combining vegetated swales and maximizing percolation where feasible, usually in areas where no storm drain infrastructure exists.

Evaluation of New Development and Redevelopment

Positive Attributes: *Assignment of dedicated staff for storm water compliance. Record retention of recent projects requiring post construction BMPs includes all relevant documentation.*

Deficiencies/Suggested Changes:
Communication between consultant and City should be improved to include greater dissemination of specific project information.

Record retention of SUSMP and inspection document should build upon recent improvements.

The process for determining if a project requires SUSMP needs improvement. Possible improvements include increased coordination with the Planning Department or a revision to Planning Counter initial project assessment.

Summary:
Based on my inspection of active or recently completed projects, the City of Compton appears to be implementing post construction BMPs as required and compliant with New/Redevelopment Provisions of the LA MS4 Permit.

Review Notes:

Construction

Site Planning

What is the threshold for reviewing plans by the MS4 (e.g., do they review all plans for projects disturbing greater than one acre, or use another threshold)/
All plans reviewed 1 acre or more, but all construction projects are required to use a Cityof Compton BMP checklist (attached to this report). Project proponents are given a list of acceptable BMPs including the CASQ Handbook. City Plan reviewers are trained by the same consultant that does the majority of the City's plan review, but consultant reviews plans and incorporates construction BMPs and SUSMP implementation.

Does the MS4 apply standard conditions, which incorporate erosion and sediment control requirements, in its plan review process?
The plan review is done by the consultant, erosion and sediment control BMPsS are in place when the plan is submitted to the consultant. The Consultant sends plans back to the developer for necessary revisions if they are found deficient.

Are plan reviewers trained on erosion and sediment control practices and requirements?
City staff trained annually, but unsure of consultant.

Do the plan reviewers check to see if the project has submitted an NOI to the State?
City staff, building and planning staff have been trained to recognize the 1 acre threshold with consultant as a check. The city uses parcel size rather than project proponent submitted acreage value.

5.2 Nonstructural and Structural BMPs for Construction Activities

What technical guidance (BMP Manual) does the MS4 use as the standard for nonstructural and structural construction BMPs?
CASQA Manual,

5.3 Site Inspection and Enforcement of Controls for Construction Sites

Site Inspections

How many inspections does the MS4 use for E&SC on construction sites?

All building inspectors are trained to recognize appropriate sediment and erosion control BMPs required and conduct a check of E & SC controls at all phases of building

Does the MS4 have an established priority for inspecting sites?
City has a full time contracted inspector overseeing the entire project with daily City inspections. All Public works projects and projects with a significant number of days to complete and significant dollar amount of 6 figures, and high risk projects such as excavation.

How often are sites inspected?
During grading, periodic inspections occur, with pre-rain and post-rain event.

Are residential construction sites, which have passed from the developer's control, inspected less frequently?
Yes, less frequently than Public works project.

Training

What type of training does the construction inspectors receive?
Annually, consultant gives 6 hour training. Topics: NPDES Overview, Planning/Construction Overview, SUSMP requirements.

How often are they trained?
Annually

Enforcement

What types of enforcement actions are available to the inspectors (e.g., notice of violation, stop work order, etc)?
Inspector gives verbal correction direction initially, for Public Works Projects problems noted in weekly minutes. Letters of non-compliance and note of non-conforming control measures are noted on inspection cards. No stop work order issued per current staff's recollection.

Give examples and statistics on enforcement of construction site E&S controls.
The City estimates50% of projects require some corrective actions.

How many enforcement actions per year?
~1 enforcement action per year issued by public works.

Are there follow-up inspections to verify compliance?
Any non-conforming or non-compliance issues must be addressed before Certificate of Occupancy Issued. Sediment discharges are addressed immediately by project proponents or City staff even during non-business hours.

5.4 Educational Measures for Construction Site Operators

Construction Operator Training
Training provided to City staff but not outside developers.

What type of E&SC training is provided to local construction operators?
No outreach provided to outside developers.

How often is this training conducted?
N/A

How many construction site operators have been trained?
N/A

Are contractors and developers required to attend?
N/A

Does the training cover:

Local and State E&SC requirements and permits
Proper E&SC design and installation
Maintenance of E&SC BMPs
State NPDES construction storm water permit requirements
N/A See above

Evaluation of Construction Program

Positive Attributes:
Appropriate BMPs were implemented at all construction sites. The inspections were not predetermined until the day of the inspections.

Deficiencies/Suggestions:

The City should ensure regular periodic scheduling of site inspections for storm water controls independent of Building and Safety inspections.

The City should document storm water BMP inspections performed independent of building inspection records.

Training/Outreach should be given/offered to developers working within the City.
Review Notes:

Site Photographs

Willow Walk GCASP # 4 19C330732 Tamarind & Elm Project

This picture was taken facing north of the nearly completed project. A small amount of drywall cutting debris was observed only in the active work area. Workers had cleaned all the other areas.

Willow Walk GCASP # 4 19C330732 Tamarind & Elm Project

This picture was taken facing east of a portion of the project bordering Elm Street. All landscaping and clean up of construction debris was completed at the time of inspection.

Willow Walk GCASP # 4 19C330732 Tamarind & Elm Project

This picture was taken facing south of a portion of the project bordering Willowbrook Avenue. All landscaping and clean up of construction debris was completed at the time of inspection. Circled is the partial capture device installed on all the catch basins along the perimeter of the site.

Willow Walk GCASP # 4 19C330732 Tamarind & Elm Project

This picture was taken of a portion of the project bordering Willowbrook Avenue. The City of Compton was directed to verify that the access panel leads to the project's post construction BMP.

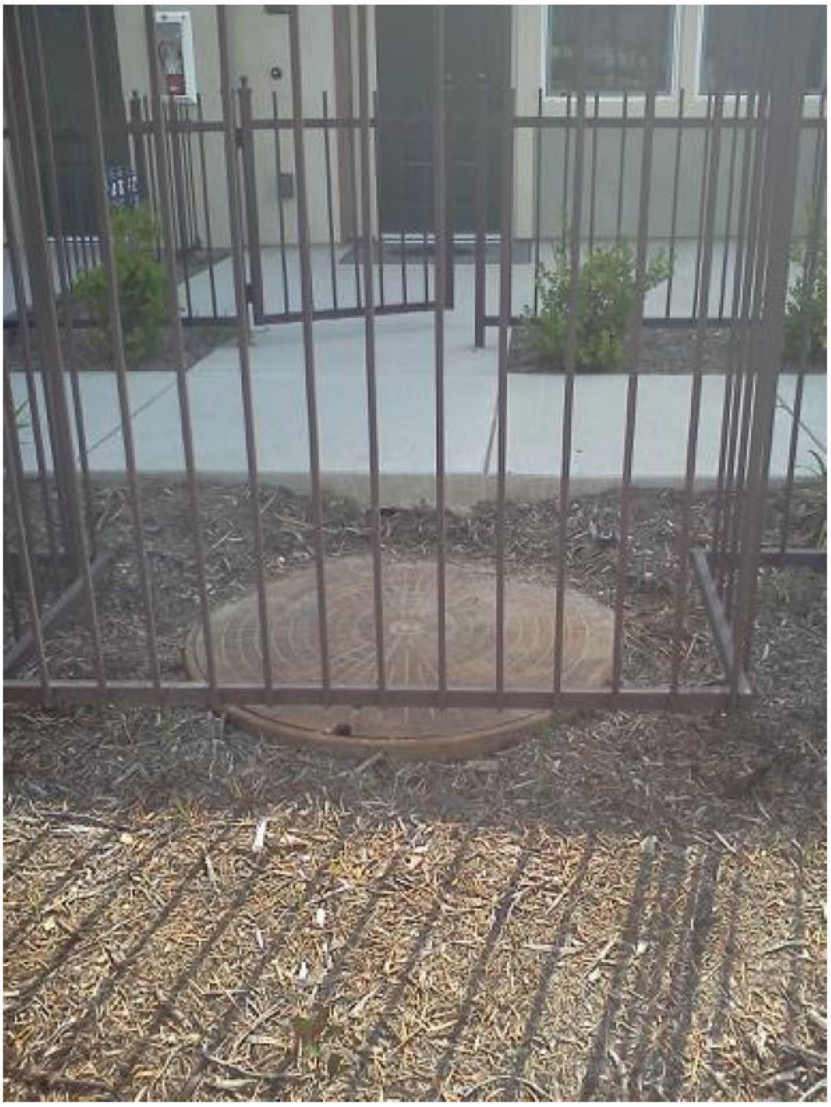

Martin Luther King Transit Center GCASP # 4 19C356722

This picture was taken facing south of active construction.

Martin Luther King Transit Center GCASP # 4 19C356722

This picture was taken of a portion of the west side of the project. Appropriate sediment control BMPs were implemented throughout the project area.

Martin Luther King Transit Center GCASP # 4 19C356722

This picture was taken facing south of a completed portion of the project bordering Willowbrook Avenue. Catch basin protection was still being implemented even for those portions of the project that were complete and being used. Circled is a catch basin with protective BMPs.

Martin Luther King Transit Center GCASP # 4 19C356722

This picture was taken of another catch basin with protective BMPs.

Martin Luther King Transit Center GCASP # 4 19C356722

This picture was taken of the area where the underground detention basin is located which is part of the post construction BMP train for the project.

Martin Luther King Transit Center GCASP # 4 19C356722

This picture was taken of the top of the Jensen hydrodynamic separator which provides treatment of storm water runoff prior to discharging to the underground detention basin pictured above.

Martin Luther King Transit Center GCASP # 4 19C356722

This picture was taken of a hydrodynamic separator that will be used to treat runoff from a parking structure prior to discharge to an underground detention basin.

Martin Luther King Transit Center GCASP # 4 19C356722

This picture was taken of a portion of the north side of the project. The perimeter was undercut to assist with sediment control.

Walton @ Mayo Sites @ Greenleaf Blvd. GCASP # 4 19C361024

This picture was taken facing north of the project. BMP implementation appeared appropriate at time of inspection.

Walton @ Mayo Sites @ Greenleaf Blvd. GCASP # 4 19C361024

This picture was taken facing west of a portion of the project bordering Greenleaf Blvd..

Walton @ Mayo Sites @ Greenleaf Blvd. GCASP # 4 19C361024

This picture was taken facing north of a portion of the project further west on Greenleaf Blvd. BMPs were appropriately implemented along this section of the project also.

Walton @ Mayo Sites @ Greenleaf Blvd. GCASP # 4 19C361024

This picture was taken of a portion of the project further west on Greenleaf Blvd. All of the catch basins were protected with the same BMPs in this photograph.

Gateway Towne Center GCASP # 4 19C341976

This picture was taken facing east of the location where the CDS unit for the Compton Towne Center is located underground. The two man-hole covers in the picture are the access points for maintenance. City of Compton staff informed me the unit serves the entire 40 acre.

Gateway Towne Center GCASP # 4 19C341976

This picture was taken facing north of the location where the CDS unit for the Compton Towne Center is located underground.

City of Compton
PUBLIC WORKS DEPARTMENT

Phone (310) 605-5505
Fax Line (310) 761-1417

STANDARD URBAN STORM WATER MITIGATION PLAN (SUSMP) REQUIREMENTS

A SUSMP is required for all projects which fall into the following categories:

1. Housing developments of 10 or more units
2. Industrial or commercial developments which add or replace 1 acre or more of impervious surface area
3. Automotive service facilities which add or replace 5,000 square feet or more of impervious surface area
4. Retail gasoline outlets which add or replace 5,000 square feet or more of impervious surface area
5. Restaurants which add or replace 5,000 square feet or more of impervious surface area
6. Parking lots which add or replace 5,000 square feet or more of impervious surface area, or 25 or more parking spaces
7. Redevelopment projects which add or replace 5,000 square feet or more of impervious surface area, excluding existing single family residences.

The SUSMP must show how Treatment Control or Structural Best Management Practices (BMPs) will be used to minimize or prevent the discharge of polluted runoff after construction. The SUSMP addresses post-construction BMPs only, and is in addition to any construction-phase BMPs included in an Erosion Control Plan or Storm Water Pollution Prevention Plan (SWPPP). All BMPs proposed in the project's SUSMP must be included in the Grading and Drainage Plans.

The SUSMP must be designed and certified by a California Registered Civil Engineer, in accordance with *Development Planning for Storm Water Management; a Manual for the Standard Urban Storm Water Mitigation Plan (SUSMP)*, by the Los Angeles County Department of Public Works. It must include the following items:

1. Treatment Control and/or Structural BMPs to minimize or prevent the discharge of polluted runoff from the site. In accordance with Los Angeles Regional Water Quality Control Board requirements, all SUSMPs must include stormwater treatment and infiltration.

2. A covenant to maintain the drainage facilities must be submitted. The covenant must be prepared using the City's standard form, and must include the following items (all attachments must be prepared on 8 ½" x 11" paper):
   * Owner's notarized signature
   * Legal description of the property (Attachment A)
   * Narrative description of BMPs and drainage facilities, with a scale drawing of the project site and location of all drainage facilties and structural BMPs (Exhibit B). The scale drawing must be legible (do not use a reduced size drawing from the construction plans).
   * A long term plan and schedule for monitoring and maintenance of all drainage devices. All Structural BMPs must be inspected, cleaned, and repaired when necessary prior to September 30 of each year. Additional inspections are required after any storms. Any necessary repairs, modifications, or installation of BMPs must be completed prior to November 1 of each year. Include the Certificate of Annual Inspection and Maintenance of Storm Drain Detention/Treatment Facility (Exhibit C). Fill in the lines for Property Address and Type of Drainage Facility, and leave the other lines blank.

3. The selection, design, sizing, and location of BMPs shall conform to the *Development Planning for Storm Water Management; a Manual for the Standard Urban Storm Water Mitigation Plan (SUSMP)*, by the Los Angeles County Department of Public Works. This manual is available on the LACDPW website at http://ladpw.org/wmd/NPDES/table_contents.cfm. Further information regarding BMP design is available on-line at:
   * County of Los Angeles Department of Public Works website at http://ladpw.org/wmd/bmp/
   * City of Los Angeles Stormwater Program website at http://www.lastormwater.org/
   * *National Menu of Best Management Practices for Storm Water Phase II*, on the U.S. Environmental Protection Agency website at http://cfpub.epa.gov/npdes/stormwater/menuofbmps/bmp_files.cfm
   * *Stormwater Best Management Practices Handbook*, on the California Stormwater Quality Association website at http://www.cabmphandbooks.net/. Click on the picture titled, "New Development and Redevelopment."

4. Procedure: Submit the following:
   * 3 sets of Grading and Drainage Plans on full-size plan sheets, showing BMPs
   * 1 original Maintenance Covenant, signed and notarized, including legal description, narrative description of BMPs, and Site Plan on 8 ½" x 11" paper
   * 2 copies of the hydrology report/hydraulic calculations, and
   * 1 copy of receipt for Public Works Grading and Drainage Plan review.

After the SUSMP is approved, the stamped Covenant to maintain Drainage Facilities and all attachments must be recorded with the Los Angeles County Registrar-Recorder, and returned to the Public Works Department. Once the approved, recorded covenant is received and any plan corrections are made, the Public Works Department will approve the applicant's Grading and Drainage Plan.

###

CITY OF COMPTON

205 SOUTH WILLOWBROOK AVENUE, COMPTON CA. 90220
(310) 605-5505 FAX.(310) 761-1417

PUBLIC WORKS CONSTRUCTION PERMIT APPLICATION

Compton Municipal Code XX

Cashier use only

APPLICATION FOR:

( ) SEWER CONNECTION PERMIT
( ) STREET EXCAVATION PERMIT FOR THE PURPOSE OF _____

( ) CURB OR CURB AND GUTTER PERMIT
( ) DRIVEWAY APPROACH & /OR SIDEWALK PERMIT
( ) OTHER _____

PERMIT

NAME _____
Please print name of person, firm or corporation for whom application is made

CITY BUSINESS LICENSE NO. _____ STATE LICENSE NO. _____ EXPIRES _____

INSURANCE COMPANY _____ INSURANCE EXPIRES _____

THE ABOVE PERSON, FIRM OR CORPORATION HEREBY MAKES APPLICATION TO PERFORM THE REQUESTED WORK:
LOCATION OF WORK: _____

UNDERGROUND SERVICE ALERT NO. _____

PLAN(S) SUBMITTED YES ☐ NO ☐ SEE ATTACHED PLAN(S) CONSISTING OF _____ SHEETS

INSTALLATION	LENGTH	WIDTH	THICKNESS	DESCRIPTION	FEES	
					PERMIT	INSPECTION
RESIDENTIAL DRIVEWAY			4"			
COMMERCIAL DRIVEWAY			6"			
CURB OR CURB & GUTTER						
SIDEWALK			4"			
EXCAVATION						
SEWER CONNECTION						
ISSUANCE FEE						

BOND AMOUNT $	BOND RECEIPT NO.	**TOTAL FEE**	

APPLICANT (PRINT) _____

SIGNATURE OF APPLICANT _____

TELEPHONE ( ) _____ DATE _____

MAILING ADDRESS _____

CITY _____ ZIP _____

APPROVED BY _____ DATE _____
Office of the City Engineer

CITY USE ONLY

DATE WORK STARTED _____

DATE WORK APPROVED _____

Signed _____ Date _____
Inspector

TRENCH PERMANENTLY RESURFACED

Signed _____ Date _____
Inspector

This application becomes a valid permit when approved, the fees are paid and an Underground Service Alert Number is obtained. This permit is valid for six months from date issued unless otherwise stated by addendum to this permit.

INSPECTION IS REQUIRED - SEE REVERSE SIDE FOR RULES AND REGULATIONS.

White - **Contractor** Yellow - **Inspector** Pink - **Finance** Gondenrod - **File**

Rivised 1/06

City of Compton
PUBLIC WORKS DEPARTMENT

Phone (310) 605-5505
Fax Line (310) 761-1417

STANDARD URBAN STORMWATER MITIGATION PLAN DEVELOPMENT WORKSHEET

Project: _____

SUSMP CATEGORY	APPLIES	DOES NOT APPLY
1. 10 Housing units or more?		
2. Industrial or commercial Development installing or replacing 1 acre or more impervious surface area?		
3. Automotive service facility?		
4. Retail gasoline outlet?		
5. Restaurant?		
6. Parking lot with 25 or more spaces, or 5,000 sq. ft. or more of impervious surface area?		
7. Redevelopment installing or replacing 5,000 sq. ft. or more impervious surface area (not including single-family structures)?		

SITE SPECIFIC PLAN CATEGORY	APPLIES	DOES NOT APPLY
1. Vehicle or equipment fueling areas?		
2. Vehicle or equipment maintenance or washing areas?		
3. Commercial or industrial waste handling or storage?		
4. Outdoor handling or storage of hazardous materials?		
5. Outdoor manufacturing areas?		
6. Outdoor food handling or processing?		
7. Outdoor animal care, confinement, or slaughter?		
8. Outdoor horticulture activities?		

Reviewed by: _____ Date: _____

COMPTON CITY HALL
205 S. Willowbrook Avenue, Compton, California 90220

BASE

AS BUILT

TRANSMITTAL

To: Bill McMullen - City of Compton

Date: April 9, 2010

Address: Compton MLK Transit Center
310 N Willowbrook Avenue
Compton, CA 90220

From: Michael Huang

Project No: 06-109

Phone No: 310.749.0359

Re: MLKTC – RFI 135

Via: ☐ Mail ☐ Overnight ☐ Hand Carry ☐ Ground

☐ For Your Use ☒ As Requested ☐ For Review & Comment ☐ For Approval

Copies	Date	No. of Sheets	Description
1	04.09.10	5	RFI 135

Remarks:

CONTRACT SUM: X INCREASED

DECREASED

NO CHANGE

REQUEST FOR INFORMATION

RFI No:	**135**	**Date:**	**2/8/2010**
TO:	City of Compton Public Works Dept	PROJECT	MLK Transit Center
	Attn: Bill McMullen	Project No:	06-04
PHONE:	(310) 605-5505	FROM:	Mepco Services Inc.
FAX:	(310) 761-1417	PHONE:	(562) 923-1500
Email:	billymac2@sprintmail.com	FAX:	(562) 923-1515
		Source:	Mepco

DESCRIPTION OF PROBLEM / CLARIFICATION / INFORMATION REQUIRED
Plan Reference: S401, C501

Specification Reference:

Storm drain from Clarifier to detention basin in conflict with several utilities where it crosses Tamarind. See Attached Survey Elevations.

CONTRACTOR'S PROPOSED SOLUTION

Please advise

Schedule Impact: no

Cost Impact: yes

Submitted By: Joseph Zdybowicz

Mepco Services

RESPONSE:
Please see attached plans, profile and details (3 pages).

Response by: Elliot Barker Rudival Niere
BASE Architecture

Signature Rudival Niere
Architect I 4-9-10

Firm: Uniplan Engineering, Inc.

Title: Project Manager

Date: April 9, 2010

Reviewed By Project Manager: _____

This document provides information or clarification only and does not constitute authorization or direction to proceed with additional work. If in the opinion of the contractor, the response has impact to the contract amount and/or time, the Contractor must advise VCM in writing within five days of receipt that the response constitutes issuance of a change order. The Contractor's notice shall be accompanied and appropriately supported with justification, reasoning and references where the contract requirements have been exceeded due to the response to the RFI. Otherwise, the response will stand as clarifications to the Contract Documents only without any additional costs to the District.

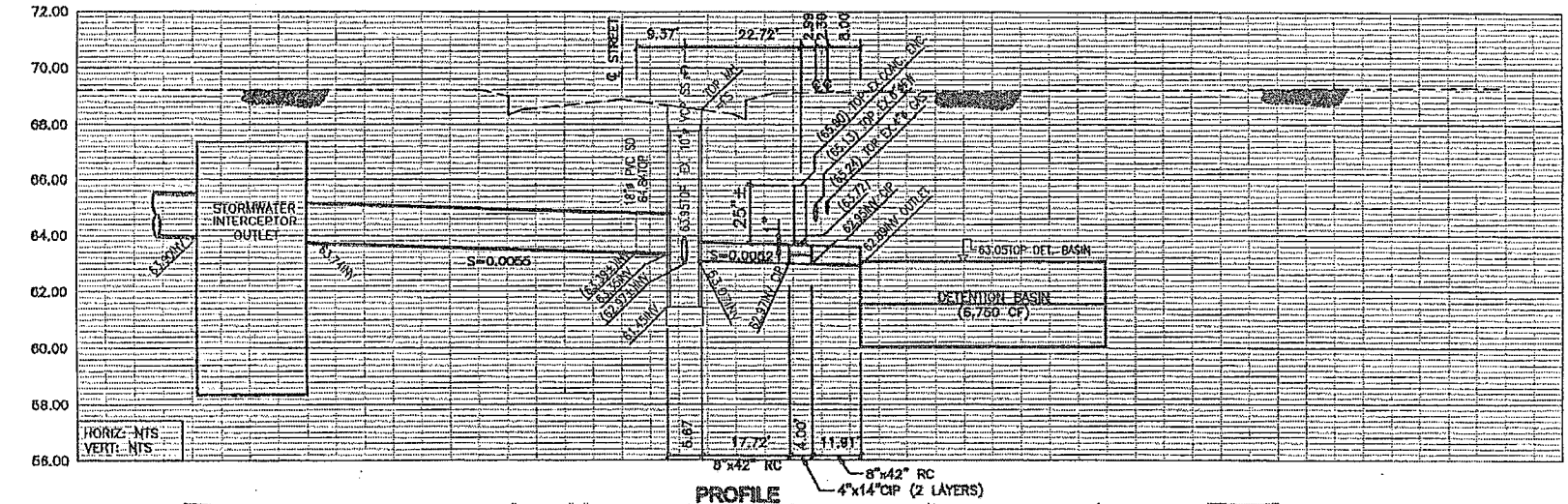

PROFILE

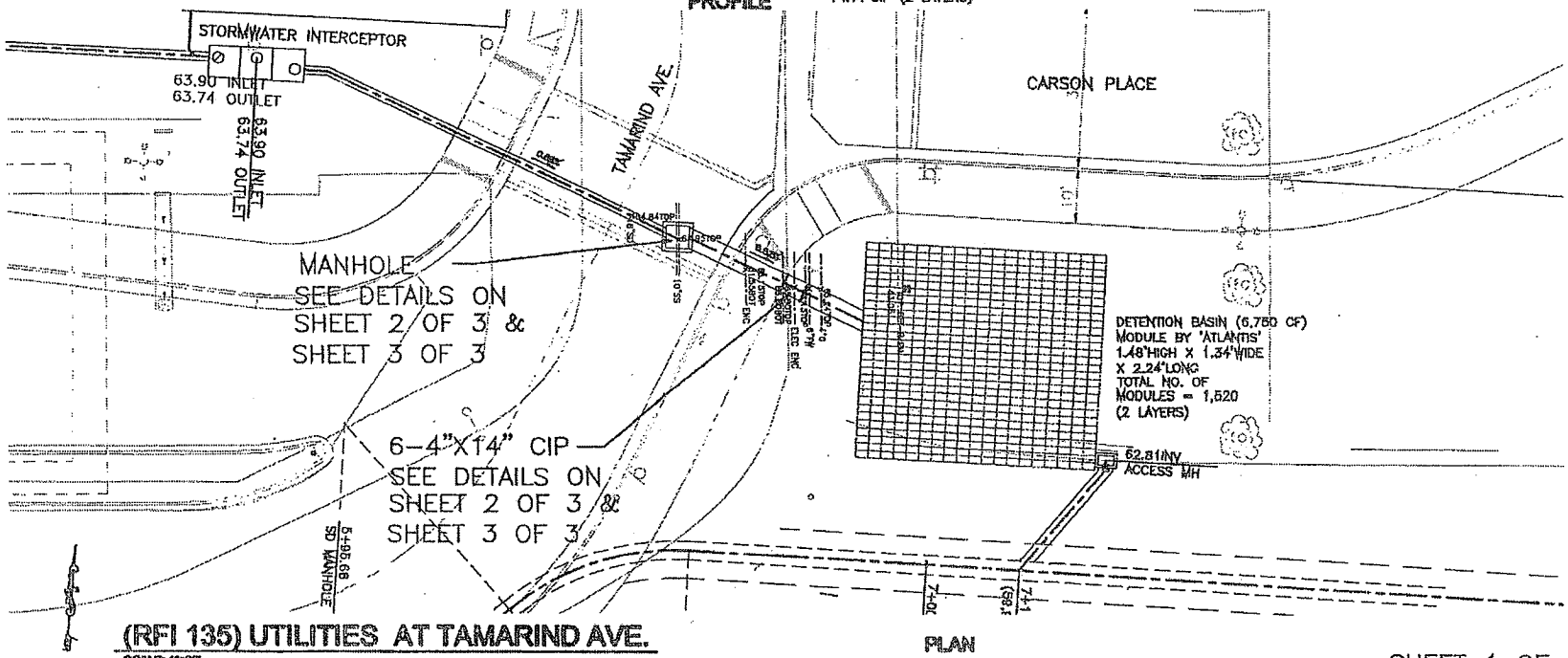

PLAN

(RFI 135) UTILITIES AT TAMARIND AVE.

SCALE: 1"=60'

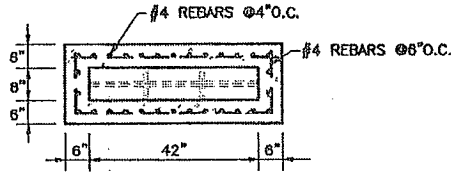

SECTION C–C

NOTES:

1. ALL REINFORCEMENT SHALL BE GRADE 40 DEFORMED BARS
2. ALL REINFORCING BARS SHALL BE PLACED 3" CLEAR OF CONCRETE SURFACE.
3. CUT BELL AND SPIGOTS OF C.I.P. TO PROPER LENGTH. WELD THE 6 PCS (2 LAYERS – 3 BOTTOM & 3 TOP) TOGETHER.

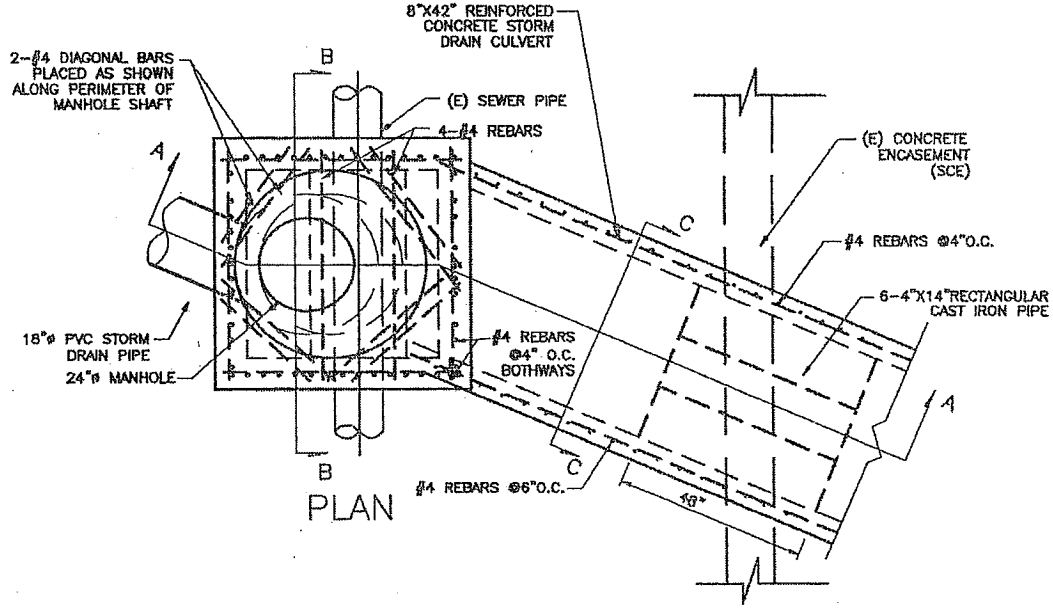

PLAN

DETAILS OF MANHOLE, R.C. STORM DRAIN CULVERT & RECTANGULAR C. I. PIPE

SCALE: NTS

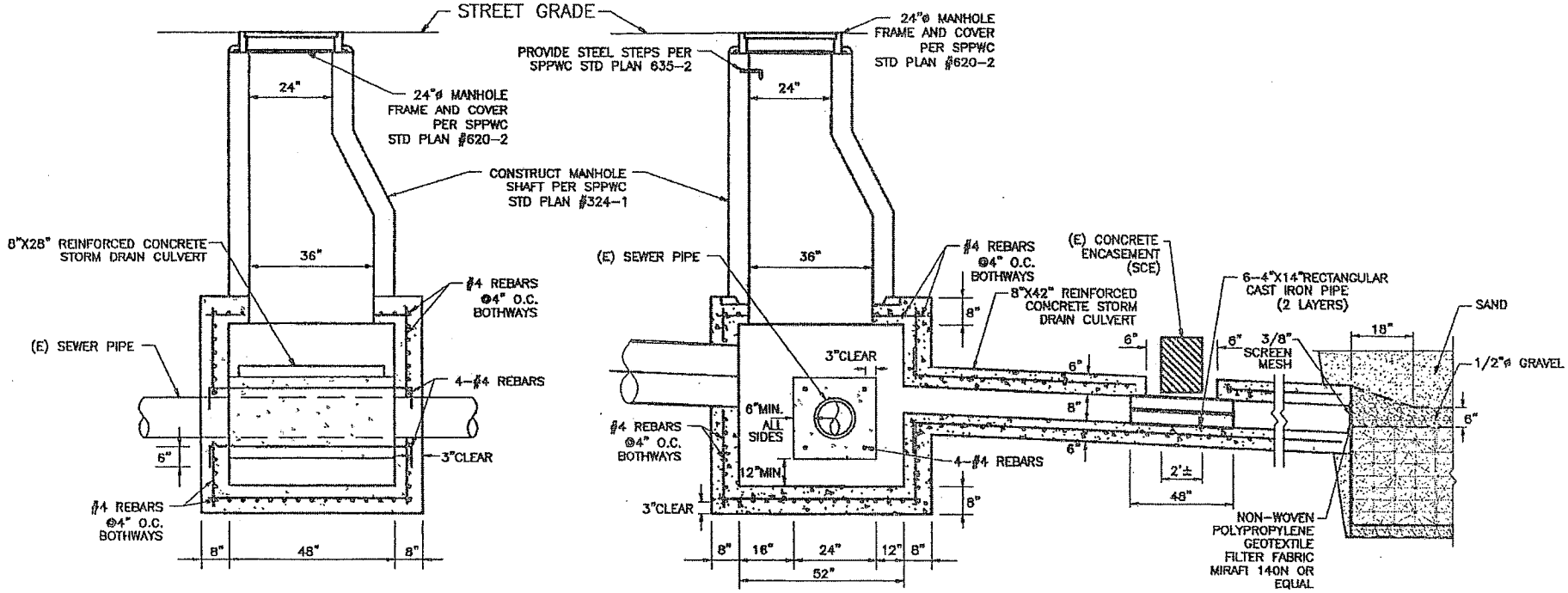

DETAILS OF MANHOLE, R.C. STORM DRAIN CULVERT & RECTANGULAR C. I. PIPE

SCALE: NTS

SHEET 3 OF 3

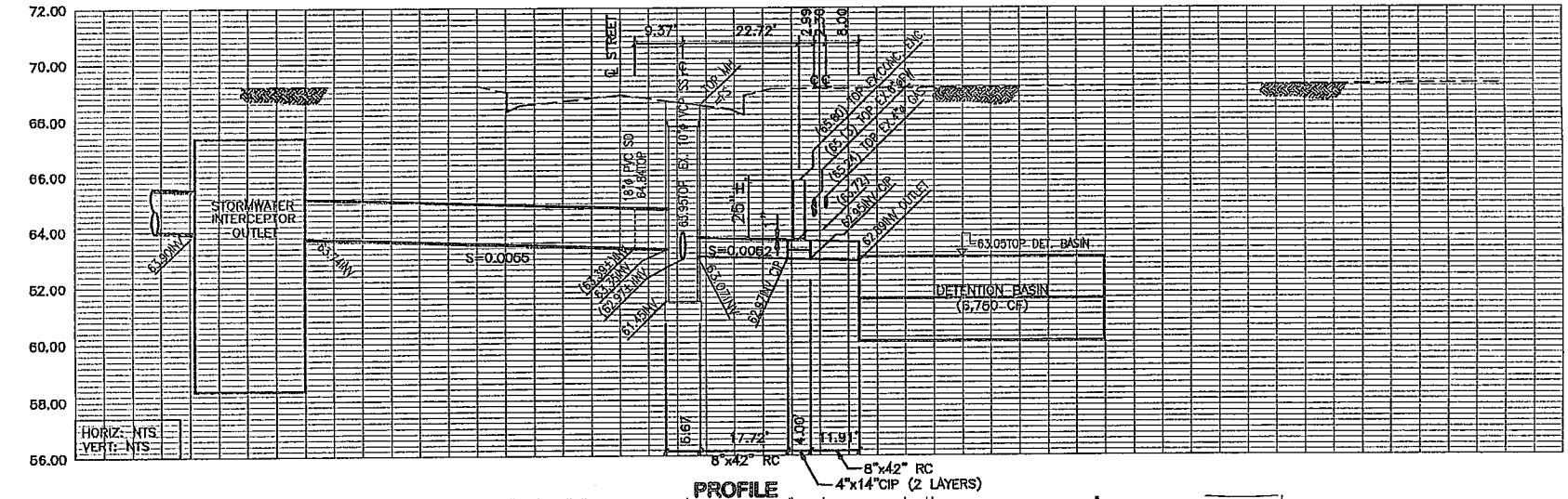

PROFILE

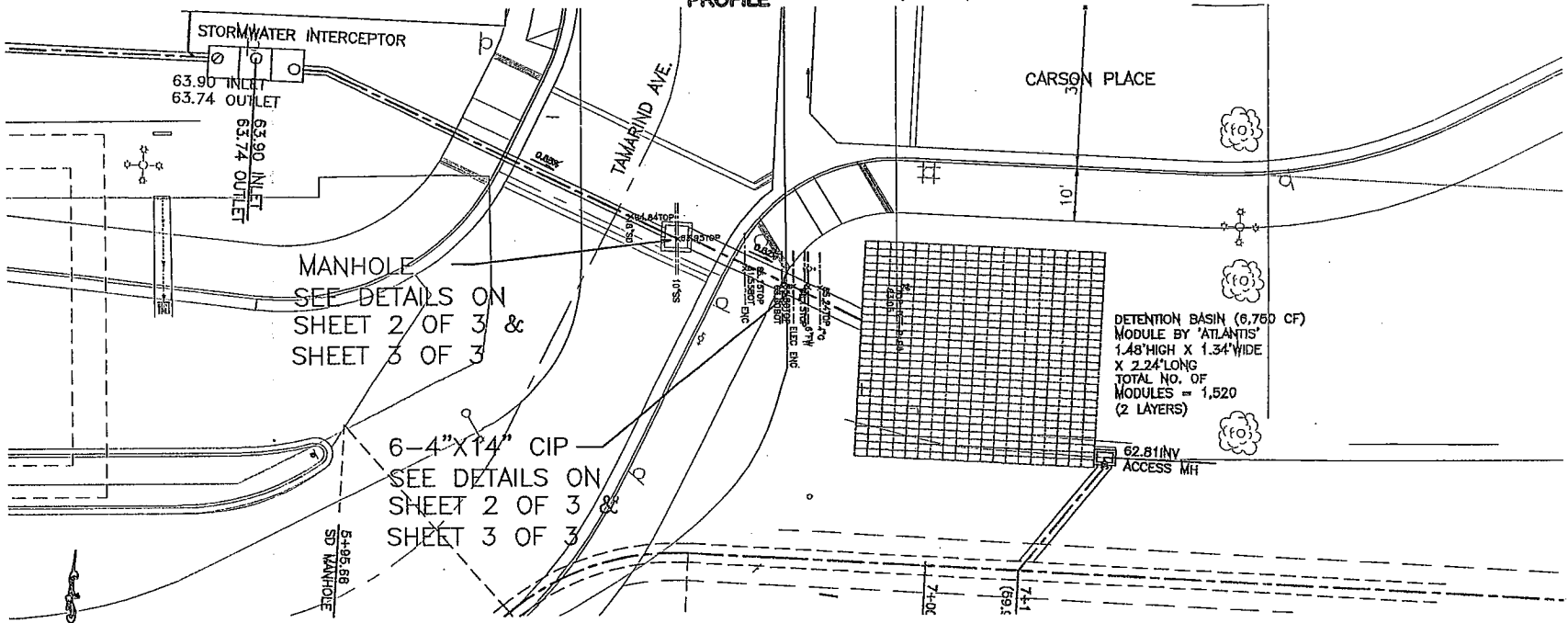

PLAN

(RFI 135) UTILITIES AT TAMARIND AVE.

SCALE: 1"=30'

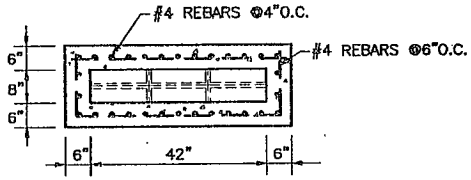

SECTION C–C

NOTES:

1. ALL REINFORCEMENT SHALL BE GRADE 40 DEFORMED BARS
2. ALL REINFORCING BARS SHALL BE PLACED 3" CLEAR OF CONCRETE SURFACE.
3. CUT BELL AND SPIGOTS OF C.I.P. TO PROPER LENGTH. WELD THE 6 PCS (2 LAYERS – 3 BOTTOM & 3 TOP) TOGETHER.

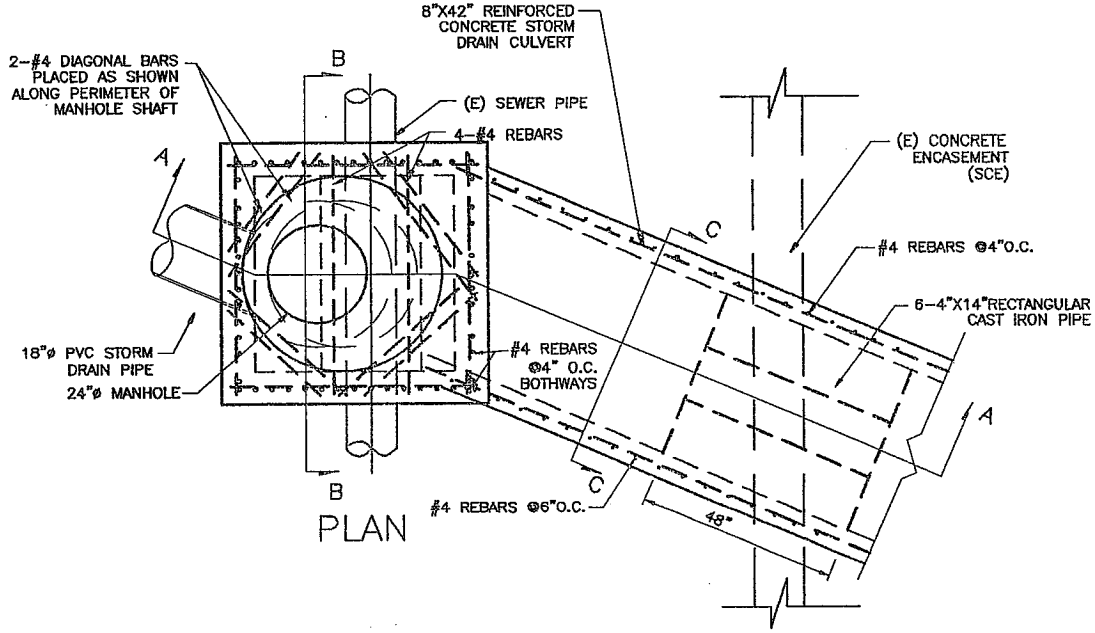

PLAN

DETAILS OF MANHOLE, R.C. STORM DRAIN CULVERT & RECTANGULAR C. I. PIPE

SCALE: NTS

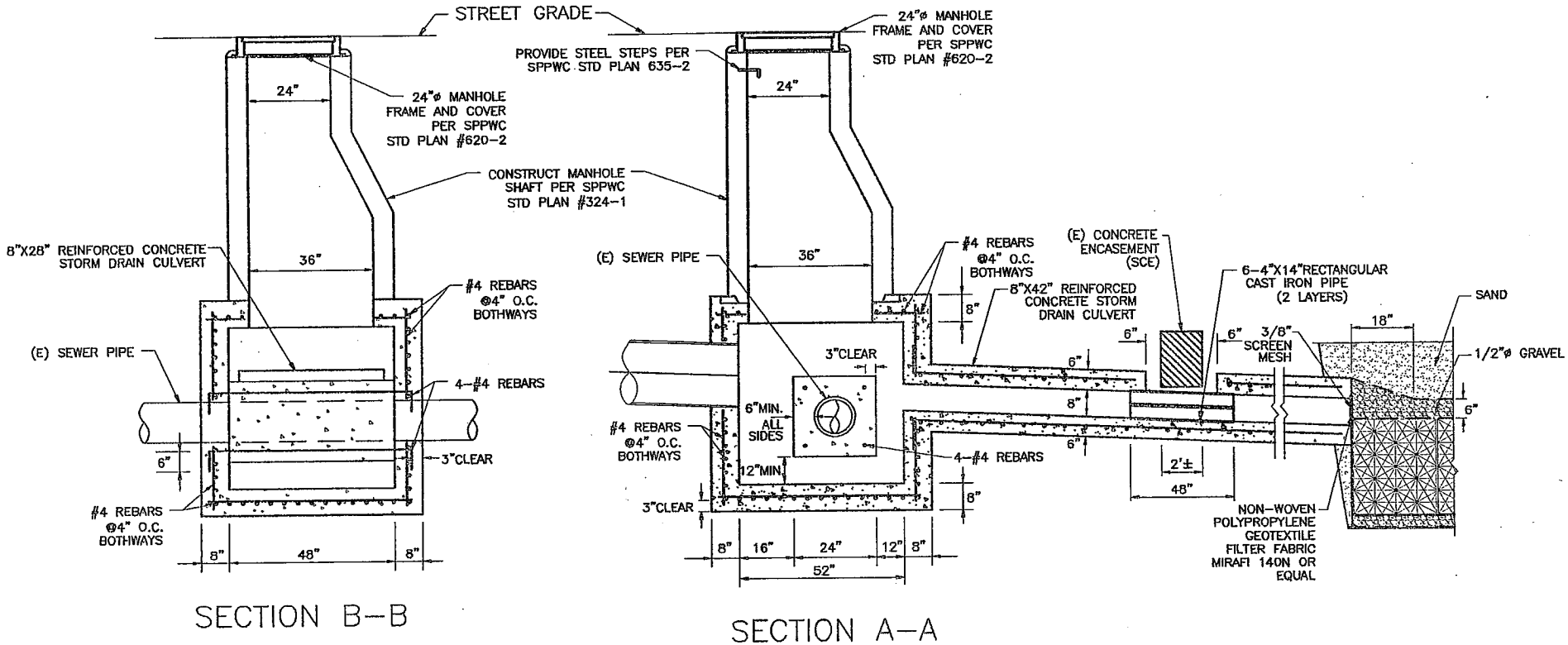

DETAILS OF MANHOLE, R.C. STORM DRAIN CULVERT & RECTANGULAR C. I. PIPE

SCALE: NTS

CITY OF COMPTON
PUBLIC WORKS DEPARTMENT

205 S. Willowbrook Ave.
Compton, CA 90220
Phone: (310) 605-5505 Fax: (310) 761-1417

Public Works Plan Review Form

Complete Site Address:		
Assessor Parcel No.: Book:	Page:	Parcel:
Project Description:		
Property Owner: Name:	Phone:	Fax:
Owner's Mailing Address: City:	State:	Zip:
Applicant: Name:	Phone:	Fax:
Applicant's Address: City:	State:	Zip:
Engineer: Name:	Phone:	Fax:
Engineer's Address: City:	State:	Zip:

Items Submitted:

- ☐ Grading & Drainage Plans (____ sheets)
- ☐ Erosion Control Plans (____ sheets)
- ☐ Geotechnical/Soils Report (____ sets)
- ☐ Hydrology Report (____ sets)
- ☐ SUSMP (____ sets)
- ☐ SWPPP (____ sets)
- ☐ Other: _____

Submittal:

- ☐ 1st Submittal
- ☐ 2nd Submittal
- ☐ 3rd Submittal after
- ☐ 4th or Subsequent Submittal (Note: additional fee due after 3rd Submittal)

Fee paid: $_____

Receipt No.: _____

I certify that I have read this application and state that the above is correct. I agree to comply with all City and County ordinances and State laws relating to building construction, and hereby authorize representatives of the City to enter upon the above mentioned property for inspection purposes.

_____

Signature of Applicant Date

City of Compton
PUBLIC WORKS DEPARTMENT

CHARLES BERGSON, P.E.
Director of Public Works/City Engineer

Phone: (310) 605-5505
Direct Line: (310) 605-5696
Fax: (310) 761-1417
E-mail: cbergson@comptoncity.org

April 30, 2008

RECEIVED
2008 MAY 8 PM 2 19
CALIF. REGIONAL WATER QUALITY CONTROL BOARD
LOS ANGELES REGION

Xavier Swamikannu, D. Env.
Chief Storm Water Permitting Program
California Regional Water Quality Control Board, Los Angeles Region
320 W. 4th Street, Suite 200
Los Angeles, CA 90013

Re: NPDES permit No. CA S004001. Development Planning Requirements part 4.D.

Dear Mr. Swamikannu:

Referencing the Board's April 17, 2008 letter, the City submits this letter.

The City presents to the Board that its commercial development administration complies with the current permit and specifically section 4D, Development Planning Program. This office also wishes to note the references to less than full implementation of aspects of the current National Pollutant Discharge Elimination System (NPDES) permit is not the Board's official view of Compton's storm water control program.

To the specific comment made regarding the Gateway Towne Center (GTC), the following comments are provided.

1. Part 4.D.1. The section lists the areas where Natural Drainage Systems are located. This project is not located in any of the areas listed and Part 4.D.1. Part 4.D.3 requires that Best Management Practices (BMPs) incorporate either a volumetric or flow based treatment control design standard. The Site uses flow based criteria for treatment and complies with the Permit.

2. The main pollutants generated by the Site were determined to be trash and debris and oil and grease, and to a lesser extent, metals and sediment. The storm water quality units, a form of volumetric treatment, treat the generated pollutants to an acceptable level which complies with the Permit.

COMPTON CITY HALL
205 South Willowbrook Avenue Compton, California 90220

3. Part 4.D.3.a. of the permit, Numerical Design Criteria, allow volumetric Treatment Control (4D3a) or Flow Based Treatment Control (4D3b). Part 4.D.3.b. was used which complies with the Permit.

In its approval of the water quality measures for the Gateway Town Center project, the City of Compton followed the guidelines set forth in the L.A. County General Permit, and in the Manual for the Standard Urban Storm water Mitigation Plan (SUSMP) prepared by the Los Angeles County Department of Public Works and approved by the Los Angeles Regional Water Quality Control Board. These approved measures continue in full effect today.

This office recognizes its role minimizing impacts of projects during the development stage. This office would be glad to meet with you and your staff to further discuss this or other projects in the City. Should you have any questions, please do not hesitate to contact this office at 310-605-5696

Very truly yours,

Sincerely,

Charles Bergson

CHARLES BERGSON, P.E.
Public Works Director/City Engineer

CB/rj

STANDARD URBAN STORMWATER MITIGATION PLAN (SUSMP)

For:

GATEWAY TOWN CENTER

TENTATIVE TRACT MAP 061885

Project Site Location/Address:
SWC OF Greenleaf Blvd. and Alameda Street
Compton, CA 90220

Prepared for:
Prism-IQ Partners, LLC
4667 MacArthur Blvd., Suite 200
Newport Beach, CA 92660
(949) 250-1902
Brook Morris, President

Lead Agency:
City of Compton
205 South Willowbrook Ave.
Compton, CA 90220
Charles Bergson, P.E., Director
(310) 605-5625

Prepared by:
Development Resource Consultants, Inc.
8175 E. Kaiser Blvd.
Anaheim Hills, CA 92808
(714) 685-6860
Jason Marechal, P.E., Project Manager

February 13, 2006
Revised: March 20, 2006
Revised: May 8, 2006
Revised: May 23, 2006

CITY OF COMPTON
APPROVED
Bergson
City Engineer
Date: 06 JUNE 200

DRC Project No. 04-760

OWNER'S CERTIFICATION

STANDARD URBAN STORMWATER MITIGATION PLAN (SUSMP) FOR GATEWAY TOWNE CENTER TENTATIVE TRACT MAP NO. 061885

This Standard Urban Stormwater Mitigation Plan (SUSMP) has been prepared for Prism-IQ Partners, LLC by Development Resource Consultants, Inc. for the project site known as Gateway Towne Center at the southwest corner of Greenleaf Blvd. & Alameda Street in the City of Compton, County of Los Angeles, State of California. The SUSMP is intended to comply with the requirements of the City of Compton for Tentative Tract Map No. 061885, which requires the preparation of a Standard Urban Stormwater Mitigation Plan.

The undersigned, while it owns the subject property, is responsible for the implementation of the provisions of this plan and will ensure that this plan is amended as appropriate to reflect up-to-date conditions on the site consistent with the County's Manual for Standard Urban Stormwater Mitigation Plan (SUSMP) and the intent of the non-point source NPDES Permit for Waste Discharge Requirements for the County of Los Angeles, Los Angeles County Flood Control District and the incorporated Cities of Los Angeles County within the Los Angeles Region Stormwater Runoff Management Program. Once the undersigned transfers its interest in the property, its successors-in-interest shall bear the aforementioned responsibility to implement and amend the SUSMP. An appropriate number of approved and signed copies of this document shall be available on the subject site in perpetuity.

Signed: _____

Name: Brook Morris

Title: President

Company: President

Address: 4667 MacArthur Blvd., Suite 200, Newport Beach, CA 92660

Telephone #: (949) 250-1902

Date: 5-30-06

Contra Costa County
Public Works
Department

Julia R. Bueren, Director
Deputy Directors
R. Mitch Avalon
Brian M. Balbas
Stephen Kowalewski
Stephen Silveira

February 8, 2013

Shin-Roei Lee
Chief, Watershed Management Division
San Francisco Bay Regional Water Quality Control Board
1515 Clay St., Suite 1400
Oakland, CA 94612

RE: Notice of Violation dated December 10, 2012

Dear Ms. Lee:

This letter provides Contra Costa County's response to the Notice of Violation (NOV) letter dated December 10, 2012. The County Watershed Program (CWP), which administers the County's stormwater permits, appreciates the additional time to meet with the many different divisions and departments of the County. The San Francisco Bay Regional Water Quality Control Board (Regional Board) audit conducted in May 2012, upon which the NOV is based, provided an opportunity for me to examine in detail many elements of the County's National Pollutant Discharge Elimination System (NPDES) permit, after having taken leadership of the CWP a few months prior.

The County agrees that some elements of the NPDES compliance program do not comply with the strict letter of the County's NPDES permit, the Municipal Regional Permit (MRP). I have found aspects of the County's NPDES Program that are inadequate in their implementation, most notably follow-up enforcement of violations, consistency of documentation, and accountability across County divisions and departments. As the County's Stormwater Manager, I am committed to addressing and improving these processes. Several recommended and required actions within the NOV call upon the County to revise or update standard operating procedures. I disagree that the MRP has the authority to dictate specific County processes or procedures like filing systems and standard operating procedures. However, the CWP will work toward the development of Standard Operating Procedures where time and budgets allow.

The remainder of this letter responds to specific required and recommended actions outlined in the NOV. I have included full text of each violation description and the required and recommended actions. Each required and recommended action includes the County's response and a time frame for completion, if applicable. The time frame for all actions is designed for implementation beginning in Permit Year 2013-2014.

Violation #1: The County failed to update its legal authority to be consistent with the MRP.

The legal authority is missing the four types of special land uses that trigger LID source control, site design, and stormwater treatment for creation or addition of 5,000 square feet or more of impervious surface. The exemptions for LID source control, site design, and stormwater treatment are not consistent with the MRP. Some information in the legal authority is outdated.

Required Action #1: The County shall update its legal authority to be consistent with the MRP, to the extent necessary to effectively regulate projects to the current permit standard (see Recommended Action #1).

- **County Response: The County's stormwater ordinance has sufficient authority, as it makes reference to the current NPDES permit. The County's ordinance is based upon a model ordinance developed by the Contra Costa Clean Water Program's (CCCWP) Legal Workgroup consisting of members of the City/County Attorneys' Association.**

- **Timeline: Not applicable.**

Recommended Action #1: The County should just refer to the C.3. requirements in its stormwater permit (i.e. "New Development and Redevelopment requirements in the County's NPDES Permit Number CAS612008") instead of modifying its legal authority each time a new requirement becomes effective in Provision C.3.

- **County Response: As stated above, the County's stormwater ordinance has sufficient authority, as it makes reference to the current NPDES permit. However, the CCCWP has just completed a final draft of an updated Model Stormwater Ordinance, which the County may adopt in the future. The updated Model Stormwater Ordinance eliminates many of the specific requirements contained in the original C.3 amendment adopted in 2003.**

- **Timeline: Not applicable.**

Deficiency #1: The County failed to have a database or equivalent tabular format of all its Regulated Projects that have installed onsite, joint, and/or offsite stormwater treatment system as required by Provision C.3.h.

The County does have a tabular format listing its stormwater treatment systems but it does not include all of the information required by Provision C.3.h.

Required Action #2: The County shall update its tabular format to include all of the information required by Provision C.3.h.ii.(5).

- **County Response: The CWP will update the tabular database to include all of the required information.**

- **Timeline: June 30, 2013**

Violation #2: The County failed to develop a prioritized plan for inspecting all installed stormwater treatment systems and hydromodification controls.

The County does not have a prioritized plan for inspecting all installed stormwater treatment systems and hydromodification controls but staff did state that the County inspects all of its stormwater treatment systems annually. Based on Water Board staff's review of the County's tabular format listing its stormwater treatment systems and inspection notes for the past three fiscal years, it appears that the County does inspect its installed stormwater treatment systems frequently.

Required Action #3: The County shall develop and implement a prioritized plan for inspecting all installed stormwater treatment systems and hydromodification controls.

- **County Response: At the time of the compliance inspection, the County had 13 stormwater treatment facilities (SWTF). Staff at the County Watershed Program (CWP) was inspecting these SWTF at least every two years, sometimes more than once per year. The CWP will develop a prioritized plan to meet the requirements of the MRP. Beginning in Permit Year 2013-2014, each SWTF will be monitored once every five years, as required in the MRP.**

- **Timeline: June 30, 2013**

Violation #3: The County failed to ensure that all runoff from C.3. projects are treated.

Provision C.3. requires the County to ensure that runoff from all regulated projects are treated in adequately designed treatment measures. For the Belmont Terrace site, the engineering drawing shows that portions of the runoff from both Falling Star Drive and

Little Valley Drive do not get treated. Mr. Swartz confirmed this observation out in the field.

Required Action #4: Moving forward, the County shall ensure that all runoff from regulated projects are treated in adequately designed treatment measures and that the treatment measures are functional before accepting the project. If treatment cannot be obtained on-site, alternate or off-site treatment can be employed.

- **County Response: The Belmont Terrace project reviewed by your staff was the first project in the County to implement the C.3 treatment control requirements. This project was technically "grandfathered" under the previous NPDES permit. However, the County required this project to comply with the new C.3 rules. Lessons learned from this project and subsequent projects have been incorporated into the CCCWP's Stormwater C.3 Guidebook. The CWP will continue to ensure that all runoff from C.3 projects are treated in accordance with Provision C.3.**

- **Timeline: Not applicable.**

Required Action #5: The County shall develop a template of required information for Operation and Maintenance (O&M) Agreements and ensure that all O&M Agreements have the required information.

The O&M Agreement for El Rincon includes requirement for inspection, frequency of inspection, and documentation of inspections but the O&M Agreement for California Shakespeare Theater does not require any of those items.

The County's tabular format shows self-certification inspections for a number of sites. There is no discussion on the requirements of self-certification inspections in the O&M Agreements for either site.

- **County Response: The County has templates for O&M Agreements, which go well beyond the requirements specified in Provision C.3. h. ii. (5). The self-certification requirement within the agreement is an additional requirement placed by the County, above and beyond those specified in the MRP. The annual certification reminds property owners of the special nature of these facilities and prompts them to assess their health.**

- **Timeline: Not Applicable**

Required Action #6: The County shall maintain a more complete filing system available for Provision C.3. inspection.

It was challenging to find documents in the files that showed compliance with Provision C.3. because the files were incomplete. County staff keeps some personal files of the final SWCPs, signed and/or adopted O&M Agreements, and inspection records that are not available in the main files. County staff stated that the paper files get purged as newer versions of documents get submitted and eventually, the files all get archived. When staff leaves, these personal files can get lost. At a minimum, the County's files for each finished project that triggered Provision C.3. need to have the final SWCP with engineering drawings showing what was installed and where it was installed, the document showing that the site was annexed into the Community Facilities District and executed O&M Agreement. These documents should not be archived because they are needed for O&M inspections. Inspection forms and correspondence regarding O&M all need to be filed and available for use.

- **County Response: There were a large number of files to review. It is possible that your staff may have been confused about where files are kept. The County's filing systems are complete and accurate, even if they are not located within a single, centralized location. The MRP does not regulate filing systems used by Permittees. The County maintains files within the appropriate areas, and they are available for reference when needed.**

- **Timeline: Not applicable.**

Required Action #7: The County's O&M Agreements to have engineering drawings and/or maps showing the location of all treatment units.

As property owners, property managers, and County staff change, it is important for the O&M Agreements to have engineering drawing and/or maps showing the location of all treatment units.

- **County Response: The County's O&M Agreements are consistent with the requirements in the MRP and ensure all installed treatment and hydromodification controls are properly operated and maintained.**

- **Timeline: Not applicable.**

Required Action #8: Moving forward, the County shall ensure that under drains for bioretention units are at least two-thirds the width of the bottom of the bioretention units. This can reduce clogging at the interface with the gravel drain layer and provide more area for infiltration.

- **County Response: The County uses bioretention design specifications contained in the most recent version of the Stormwater C.3 Guidebook at the time the development was submitted. I welcome a regional discussion on the Water Board's proposed underdrain design standard.**

- **Timeline: Not applicable**

Required Action #9: In its ERP, the County shall make revisions to:
(1) require immediate abatement of an active non-stormwater pollutant discharge;
(2) assign an enforcement level for repeat violations of the field scenarios in Level 1 and repeat non-stormwater pollutant discharges in Level 2;
(3) state which staff position has the authority to issue each level of enforcement;
(4) provide guidance on when and under what conditions Cease and Desist Orders, Stop Work Orders, Orders to Clean and Abate, or Notices to Clean enforcement mechanisms can be employed;
(5) include guidance for failure to report spills, falsification of information, improper signature or certification, and failure to submit required information by due date; and
(6) ensure the discussions and the flow chart are consistent.

- **County Response: The CWP has decided to split the Enforcement Response Plan (ERP) for C.5 (Illicit Discharge) and C.6 (Construction Site Controls) from C.4 (Industrial and Commercial Site Controls). A draft of the C.4 ERP has been submitted to me for review. The C.5 & C.6 ERP is still being written.**
  - **(1) Table 1: Flowchart of Tiered Enforcement Response from the May 2012 ERP, page 13 (enclosed), uses the term "Immediate Abate" for minor violations (Tier II) and major violations (Tier III). Furthermore Section C.4.c. ii. (2) requires "all violations must be corrected in a timely manner with the goal of correcting them (emphasis added) before the next rain event but not longer than 10 business days." I do not believe "timely" is synonymous with "immediate." The County's ERP complies with Section C.2.c. ii. (2) of the MRP.**

(2) Table 1 of the May 2012 ERP clearly shows that violations not corrected "before the rain event but no longer than 10 days" shall be elevated to the next enforcement level.

(3) The requirement to state which staff position has the authority to issue each level of enforcement is not specified within the MRP. However, I agree that it is a worthwhile addition and the CWP will include it in the ERP updates.

(4) The CWP will modify the ERP to provide guidance when and under what conditions Cease and Desist Orders, Stop Work Orders, or Orders to Clean and Abate enforcement mechanisms can be employed.

(5) This guidance is not specified within the MRP. However, I agree that it is a worthwhile addition and the CWP will include it in the ERP updates.

(6) The CWP will modify the ERPs to ensure the discussions and the flowchart are consistent.

- **Timeline: June 30, 2013**

Required Action #10: The County shall revise its ERP and Business Inspection Plan to elevate all businesses cited for pollutant exposure, poor housekeeping, or evidence of historical discharge for priority (annual) inspections. Once the businesses are found to be in compliance, the County can place them back on their regular inspection schedule. C.4.b.(3) requires the County to prioritize facilities for inspections.

- **County Response: Section C.4.b. ii. (3) of the MRP refers to prioritizing inspections based upon "pollutant sources on site, pollutants of concern, proximity to a waterbody, violation history of the facility, and other relevant factors." Table 2-2 of the May 2012 Business Inspection Plan (BIP) (enclosed) refers to "enforcement re-inspection" as a category requiring annual reinspection. The text of the BIP refers to "violation history" (Section 2.2, pg. 5) as a factor that would require more frequent inspections. Section 2.3 further clarifies the point, by noting a business that "shows evidence of active non-stormwater pollutant discharges during a routine inspection and gets cited with a Notice of Violation . . . is subject to 'priority' inspection at least once the following year." This text adequately demonstrates compliance with the MRP.**

- **Timeline: Not applicable.**

Recommended Action #2: The County should also revise its ERP and Business Inspection Plan to elevate all businesses cited for stated business practices for priority inspections.

- **County Response: Section C.4.b. ii. (3) of the MRP lists the conditions that trigger prioritized inspections. "Stated business practices" is not included. Stated business practices that have the potential to pollute trigger a Level I response: Verbal warning, Warning Notice/Notice to Comply/Education. Businesses given one of these actions are not required to be assigned to priority inspections. The MRP requires business cited for violations shall be assigned to priority inspections. The BIP and ERP clearly state this.**

- **Timeline: Not applicable.**

Deficiency #2: The ERP fails to clearly direct County staff to verify that all corrective actions have been implemented in a timely manner, before the next rain event but no longer than 10 business days from the time the violations were first discovered, unless longer time is required with a statement of justification.

The ERP can give County staff the option, under certain scenarios, to allow facilities to self-certify that the implementation of corrective actions has been done in a timely manner. An email or fax with pictures and a signed certification statement could be an option for self-certification of corrective actions. The submittal of the email or fax must demonstrate that compliance was achieved in a timely manner.

Immediate corrections can be temporary and short-term but the County must have procedures in place to verify the implementation of the temporary, short-term corrections, require a timeline for the permanent corrections, and verify the implementation of the permanent corrections.

Required Action #11: The County shall (1) revise its ERP to clearly direct staff to verify that all corrective actions for violations have been implemented in a timely manner, before the next rain event but no longer than 10 business days from the time the violations were first discovered, unless longer time is required with a statement of justification; and (2) update its standard operating procedures for Provisions C.4., C.5., and C.6. inspections to include verification that corrective actions have been implemented in a timely manner and guidance on putting together timelines for implementation of permanent corrective actions.

- **<u>County Response:</u> The CWP will update the ERPs to include the requirement to verify that all corrective actions for violations have been implemented in a timely manner, before the next rain event, but no longer than 10 business days from the time the violations were first discovered, unless longer time is required with a statement of justification. There is no requirement in the MRP to develop standard operating procedures.**

- **<u>Timeline:</u> June 30, 2013**

<u>Required Action #12:</u> The County shall (1) evaluate its businesses for the functional aspects and types listed in C.4.b.ii. of the MRP and prioritize them into its BIP for inspection, as appropriate; (2) include a discussion in the BIP that shows that the County has considered the functional aspects and types listed in C.4.b.ii. for inclusion into its BIP; (3) include the total number and list of facilities requiring inspections in the BIP; and (4) have its BIP available for use and dissemination as one document.

- **<u>County Response:</u> The CWP will update the BIP to include the discussion of the process to elevate businesses by functional aspect and types. Since the number of facilities requiring inspections change due to the inclusion of new businesses and the deletion of failed businesses, the CWP will annually attach a list of the businesses requiring inspection as an appendix to the BIP. This appendix will be a separate computer file from the BIP, but will be printed out with the BIP and other appendices.**

- **<u>Timeline:</u> June 30, 2013**

<u>Deficiency #3:</u> The *Enforcement Response Plan Inspection Report Terminology* fails to comply with the MRP requirements. In addition, the *Enforcement Response Plan Inspection Report Terminology* fails to be consistent with the County's ERP. See Attachment 3 for summary of review.

<u>Required Action #13:</u> The County shall revise its *Enforcement Response Plan Inspection Report Terminology* to be consistent with its ERP, which will be revised pursuant to the above required actions.

- **<u>County Response:</u> I acknowledge that there is another level of enforcement in "Appendix D: Enforcement Response Plan Report Terminology." The additional level of enforcement refers to those businesses that pass the inspection with no problems. This additional**

column is confusing and will be removed from the appendix in the ERP revisions. Otherwise, the definitions and terminology are consistent with the rest of the ERP. The County's ERP includes a section called "Definitions" on page vii and viii. These definitions are consistent with the rest of the document.

- **Timeline: June 30, 2013**

Deficiency #4: The Inspection Plan for Hazardous Materials fails to clearly direct inspectors to verify that all corrective actions have been implemented in a timely manner, before the next rain event but no longer than 10 business days from the time the violations were first discovered, unless longer time is required with a statement of justification.

Required Action #14: The County shall ensure that the information contained in future Inspections Plans for Hazardous Materials and Environmental Health is consistent with its revised ERP.

The County must require actual non-stormwater pollutant discharges to be abated immediately. All violations, regardless of their status as minor, major, Class II, or Incident Response, must be corrected within a timely manner, before the next rain event but no longer than 10 business days after the violations are discovered, unless longer time is required with a statement of justification. Corrective actions can be temporary and a longer compliance time can be allowed under certain circumstances such as capital improvement. Rationales for longer compliance times must be documented pursuant to Provision C.4.

Again, the County, under certain scenarios, can allow facilities to self-certify that the implementation of corrective actions have been done in a timely manner. An email or fax with pictures and a signed certification statement could be an option for self-certification of corrective actions. But the submittal of the email or fax must demonstrate compliance was achieved in a timely manner. These certain scenarios and procedures for self-certification must be included in the ERP, and clearly communicated in the Interdepartmental Agreements and to inspectors.

- **County Response: The terminology of the BIP is consistent with the terminology of the ERP. The BIP prioritizes which facilities are inspected. The ERP outlines the inspection process. As discussed in the County's response to Required Action # 11, the CWP will amend the ERP to state that all violations (but not Warnings or Notices to Comply)**

shall be corrected before the next rain event or within 10 business days.

- **Timeline: June 30, 2013**

Required Action #15: The County shall (1) develop and implement mechanisms to ensure that it has an accurate list of all industrial facilities located in unincorporated County and (2) update its BIP with discussions of these mechanisms and accurate lists.

- **County Response: The CWP will update the BIP to include the process to add new businesses and delete closed businesses. Appendix 3-1 of the BID will be updated annually to reflect business turnover. The BIP already includes the process to prioritize business inspections.**

- **Timeline: June 30, 2013**

Required Action #16: The County shall evaluate and better define in its ERP and Business Inspection Plan what the County expects when a BMP is "Recommended" during an inspection by Hazardous Waste Program inspectors. It is unclear if recommendations are requirements and if there are consequences for non-implementation of recommendations tied to violations.

- **County Response: "Recommendations" are used with Level 1 enforcement actions — Warning Notices and Notices to Comply. Actions associated with Violations (Levels II–IV) are requirements. The CWP will better define these terms in the revised ERP. They will not be discussed in the BIP.**

- **Timeline: June 30, 2013**

Required Action #17: The County shall evaluate how it maintains its files and ensure that its files are accurate and complete.

- **County Response: There is no requirement in the MRP regarding maintenance of files. The County's files are accurate and complete. The CWP and/or the CCWP will continue to train staff on the importance of accurate and complete files in its annual training with staff at the Hazardous Materials Division and Environmental Health Division of the Health Services Department. The CWP will also review filing schemes with senior staff in each of these divisions.**

- **Timeline: Not applicable.**

Violation #4: The County failed to require immediate abatement of discharge, and require and/or verify implementation of corrective actions in a timely manner, with the goal of correcting them before the next rain event but no longer than 10 business days after the violations are discovered. The County also failed to provide rationale for compliance dates beyond 10 business days after the violations are discovered.

Attachment 6 lists the facilities that did not have corrective action required and/or verified in a timely manner.

The Hazardous Materials Program's inspection form allows 30 days for businesses to correct minor violations.

Pinole-Rodeo Autowreckers was inspected on September 27, 2011. But since the inspection record is incomplete, it is unclear what were the specific violations, required corrective actions, enforcement action, and the required compliance date. A subsequent inspection on January 20, 2012 shows that the required compliance date had been extended to July 20, 2012. The MRP requires a rationale to be recorded if more than 10 business days are required for compliance. There is no rationale for the extension in the records reviewed. In discussions with Hazardous Materials staff, it appears that the rationale may be that local officials have asked the County to work with the small business. Any rationale must have a timeline listing the specific corrective actions that must be accomplished by certain dates. There is no timeline for corrective actions, but the County did note improvements during its January 20, 2012 inspection and the inspection form for the March 6, 2012 notes that the business was making improvements. Immediate corrections can be temporary and short-term but the County must have procedures in place to verify the implementation of the temporary, short-term corrections, require a timeline for the permanent corrections, and verify the implementation of the permanent corrections. This site has had a history of stormwater violations and has been referred to the Department of Fish and Game and the Water Board.

Required Action #18: The County shall ensure that appropriate corrective actions are required for violations and that the corrective actions are verified in a timely manner. This should be before the next rain event, but no later than 10-business days after the violations are discovered. The County shall revise its inspection forms to reflect this MRP requirement. The County shall also ensure that rationale, for compliance dates beyond 10 business days after the violations are discovered, are recorded and compliance timelines are established.

- **<u>County Response:</u> The Industrial Facilities Inspection form was revised in July 2012 in response to the audit. It may be revised again. The Commercial Inspection form still needs to be revised. The CWP and/or the CCCWP will continue to conduct annual training with staff from Environmental Health and Hazardous Material Divisions of the Health Services Department. The CWP is also developing a process for inspection sheets to be submitted to CWP staff at regular intervals for compliance review.**

- **<u>Timeline:</u> June 30, 2013**

<u>Violation #5:</u> The County failed to implement its ERP.

Of the 35 Food Service inspections that found violations, only one enforcement action was taken: Cease and Desist to Tacos El Grullense/Mobile Truck on January 15, 2010. The rest of the facilities with violations were just given educational materials. (Please see Attachment 7.)

Hazardous Waste inspectors cite minor, Class I, or Class II violations. These three types of violations are not listed or defined in the County's ERP.

Of the 36 inspections done by Hazardous Waste inspectors that found violations, the County took four enforcement actions:

1. AG Schwartz Trucking, 3/24/10 , Class II, Notice to Comply
2. Deal Autowreckers, 11/21/11, Minor and Recommended BMPs, Notice to Comply
3. Diablo Boat Works, 3/24/10, Class II, Notice of Violation
4. Pinole-Rodeo Autowreckers, 6/15/10, Class II, Notice of Violation

No other enforcement actions were taken at businesses with violations, even at ones with Class II violations. (Please see Attachment 8.)

Pinole-Rodeo Autowreckers inspection form for January 20, 2012 noted "...run-off still leaving the property." Based on the notes for the business, the run-off was probably contaminated with non-stormwater pollutants from the business. No action was taken to stop or divert the run-off. And the run-off appears to be an ongoing problem since at least June 30, 2011.

<u>Required Action #19:</u> The County shall ensure consistent implementation of its ERP and revise both inspection forms to reflect the enforcement tools in its ERP.

- **<u>County Response:</u> The CWP and/or the CCCWP will continue to conduct annual training with staff from Environmental Health and Hazardous Material Divisions of the Health Services Department (HSD). The CWP is also developing a process for inspection sheets to be submitted to CWP staff at regular intervals for compliance review.**

- **<u>Timeline:</u> June 30, 2013**

<u>Required Action #20:</u> The County shall define "minor", "major", "Class I", and "Class II" violations in its ERP and associate them with appropriate enforcement tools.

- **<u>County Response:</u> Table 1: Flowchart of Tiered Enforcement Response of the May, 2012, ERP (enclosed) clearly defines "minor," "major," "Class I," and "Class II" violations. The ERP is being revised to create separate documents for C.4 and C.5/C.6.**

- **<u>Timeline:</u> June 30, 2013**

<u>Required Action #21:</u> The County shall provide training to staff responsible for implementing Provision C.4., C.5., and C.6. and the updated standard operating procedures; revised ERP; and revised inspection forms.

- **<u>County Response:</u> The CWP has already developed new inspection forms and trained staff from the Hazardous Material Division of HSD regarding the changes discussed by Regional Board staff during the May 2012 audit. Staff from the Environmental Health Division will be given new inspection forms and trained in the spring of 2013. A revised inspection form for Provision C.6 (Construction Site Controls) will be presented at training prior to the onset of the rainy season. The MRP does not require standard operating procedures.**

- **<u>Timeline:</u> June 30, 2013**

<u>Recommended Action #3:</u> The County should revise its industrial and commercial business inspection form to more clearly identify the violations and the required actions the business must implement. This is similar to how the Food Services inspection form is done.

- **<u>County Response:</u> The Hazardous Materials inspection forms have been revised. The Environmental Health inspection forms will be revised in the spring of 2013.**

- **Timeline: June 30, 2013**

Recommended Action #4: In the continuation sheets used by Hazardous Waste, the County should clearly identify the violation (i.e. SW09) with the required follow-up action that corrects the violation.

- **County Response: The Hazardous Materials inspection forms have been revised. They will be reviewed and possibly revised again. The Environmental Health inspection forms will be revised in the spring of 2013.**

- **Timeline: June 30, 2013**

Violation #6: The County failed to respond in a timely manner, require immediate abatement of the discharge, effectively eliminate the illicit discharge at Pinole-Rodeo Autowreckers, take appropriate enforcement actions, and require implementation of necessary temporary controls to eliminate the sheen leaking from the property into the stormdrain.

Required Action #22: The County shall revise its standard operating procedures to direct inspectors to (1) respond to illicit discharge complaints in a timely manner, (2) ensure that all illicit discharges are fully cleaned up and corrective actions are implemented in a timely manner, (3) sample discharge and receiving water as feasible, and (4) implement its ERP appropriately. The County shall also revise its ERP to direct (1) immediate implementation of BMPs to divert the illicit discharge away from the storm drain and/or waterbodies, (2) timely clean-up and timely verification of the corrective actions, (3) escalation of enforcement for noncompliance and for patterns of noncompliance, and (4) requirement for corrective actions to reduce future non-compliance.

- **County Response: The CWP has already developed new inspection forms and trained staff from the Hazardous Materials Division of HSD regarding the changes discussed by the Regional Board staff during the May 2012 audit. They may be revised again. Staff from the Environmental Health Division will be given new inspection forms and trained in the spring of 2013. The MRP does not require the development of standard operating procedures. Section C.4.c. requires "all violations must be corrected in a timely manner with a goal of correcting them before the next rain event but no longer than 10 business days." This is not "immediate implementation." The ERP will**

be revised to create separate documents for C.4 and C.5/C.6. and will comply with Provision C.4.c. of the MRP.

- **Timeline: June 30, 2013**

Required Action #23: The County shall train its inspectors on the revised standard operating procedures and ERP.

- **County Response: The CWP and/or the CCCWP will continue to conduct annual training with staff from Environmental Health and Hazardous Material Divisions of HSD. Revisions to the ERP will be a central topic in these trainings.**

- **Timeline: Ongoing**

Required Action #24: The County shall discuss if the public landscaping, private common landscaping, and private front yard landscaping are complete (land fully stabilized) at the time of their respective annexations into the City of San Ramon.

- **County Response: It is not clear whether this required action is tied to any violation or deficiency. Public landscaping, private common landscaping, and private front yard landscaping do not need to be complete for a subdivision to be annexed into a city. The County will continue to discuss the status of any developments in progress with the staff from the city who is annexing the property.**

- **Timeline: Not applicable.**

Required Action #25: The County shall define the difference between "needs attention" and "violation" in its inspection form; update its standard operating procedures on what enforcement tools are available for a BMP that "needs attention" and those that are in "violation"; and train its inspectors on these definitions and the enforcement tools available for each.

- **County Response: The Construction Site Inspection Form will be updated to distinguish between "needs attention" (Level 1 — Written Notice/Notice to Comply) and "violation" (Level 2 — Violation). Construction and grading inspectors will be trained as to the new form prior to the beginning of the next construction season.**

- **Timeline: October 1, 2013**

Violation 7: The inspection forms fail to show that corrective actions for violations were consistently verified in a timely manner. The MRP requires timely correction of violations, before the next rain event but no later than 10 business days after the violations are discovered, unless a justification for a longer time is recorded.

Required Action #26: The County shall (1) update its inspection form to allow inspectors more flexibility to record observations in the field; (2) update its standard operating procedures for inspections to reflect the requirements of the MRP; and (3) train its inspectors on the standard operating procedures for inspections and how to fill out each section of the inspection form completely and accurately.

- **County Response: The MRP does not regulate the formatting of inspection forms, nor does it require the development of standard operating procedures. This is at the County's discretion. Construction and grading inspectors will be trained as to the new form prior to the beginning of the next construction season.**

- **Timeline: October 1, 2013**

Violation #8: The County failed to inspect all construction sites disturbing one or more acre of land monthly during the rainy season.

Required Action #27: The County shall train its inspectors to (1) conduct monthly inspections, October – April, at all construction sites disturbing one or more acre of land and at all high priority sites, through all phases of construction until sites are fully stabilized by landscaping or with the installation of permanent erosion control measures, (2) state in the inspection forms when sites are fully stabilized, and (3) record on the first inspection form an appropriate comment, such as "First inspection", for sites that start construction after October. The above information shall also be included in the standard operating procedures for inspections.

- **County Response: A separate ERP for C.5 (Illicit Discharge) and C.6 (Construction Site Controls) is being developed. Construction and grading inspectors will be trained about the new ERP and inspection form prior to the beginning of the next construction season.**

- **Timeline: June 30, 2013 and October 1, 2013**

Violation #9: The County's tracking data failed to match its 2011-2012 Annual Report in a number of required fields.

Required Action #28: The County shall ensure that the information in the Annual Report matches the data in the inspection forms and tracking data table.

- **County Response: The CWP is implementing a procedure to require all construction site inspection forms to be submitted to the CWP on a monthly basis. This will allow staff at the CWP the ability to catch inconsistencies early and make needed corrections.**

- **Timeline: Ongoing**

Recommended Action #5: The County should revise its electronic database/tabular format so that it is easier to read and follow the inspections and actions. Revision to its electronic database/tabular format should help the County with annual reporting.

- **County Response: The CWP is exploring the use of other databases.**

- **Timeline: Ongoing**

Required Action #29: The County shall (1) update the enforcement options in the inspection form to match the options provided in the County's ERP or vice versa, (2) update its standard operating procedures for inspections, and (3) train its staff on the updated inspection form and standard operating procedures.

- **County Response: The CWP is writing a separate ERP for C.5 & C.6 to better address the unique challenges of enforcement on construction sites. The MRP does not require standard operating procedures. The CWP will conduct training prior to next construction season.**

- **Timeline: C.6 ERP: June 30, 2013; Inspector training: October 1, 2013**

Required Action #30: The County shall ensure that construction sites have appropriate BMPs year round to minimize pollutant discharge to receiving waters.

- **County Response: A separate ERP for C.5 & C.6 is being developed. Construction and grading inspectors will be trained as to the new ERP and inspection form prior to the beginning of next construction season.**

- **Timeline: C.6 ERP: June 30, 2013; Inspector training: October 1, 2013**

The County remains committed to continuous improvement of its stormwater programs designed to improve water quality in our creeks, the Delta, and the Bay. I remain committed to continuing to work collaboratively with you and your staff to achieve these goals. If you have any questions, please contact me by phone at (925) 313-2296 or by e-mail at csell@pw.cccounty.us.

Sincerely,

Cece Sellgren

Cece Sellgren
Watershed Program Manager
County Watershed Program

CS:cw
\\PW-DATA\grpdata\fldctl\NPDES\Admin\2012 Audit\NOV\Response to SFRB's 12-10-12 NOV - Final.docx
Enclosures:

- Table 1: Flowchart of Tiered Enforcement Response from "Contra Costa County (Unincorporated) and Contra Costa County Flood Control and Water Conservation District's Enforcement Response Plan," May 2012.
- Table 2-2: Inspection Frequency by Major Business Type from "Industrial and Commercial Businesses Stormwater Inspection Plan," Contra Costa County Public Works Department, May 2012

c: David Twa, County Administrator
Laura Strobel, County Administrator's Office
Julia R. Bueren, Public Works Director
R. Mitch Avalon, Deputy Public Works Director
Mike Carlson, Flood Control
Kevin Emigh, Design and Construction
Dante Morabe, Design and Construction
Warren Lai, Engineering Services
Rich Lierly, Engineering Services
Tom Dalziel, Contra Costa Clean Water Program
David Swartz, County Watershed Program
Jason Crapo, Deputy Director, Dept. of Conservation & Development
Marie Taylor, Dept. of Conservation & Development—Construction Inspection
Steve Morioka, Health Services Dept.—Hazardous Materials Division
Devra Lewis, Health Services Dept.—Hazardous Materials Division
Marilyn Underwood, Health Services Dept.—Environmental Health
John Wiggins, Health Services Dept.—Environmental Health
Tom Mumley, San Francisco Bay Regional Water Quality Control Board
Dale Bowyer, San Francisco Bay Regional Water Quality Control Board
Selina Louie, San Francisco Bay Regional Water Quality Control Board

Enclosure #1
- Required Action #9
- Required Action #20

TABLE 1:

FLOWCHART OF TIERED ENFORCEMENT RESPONSE

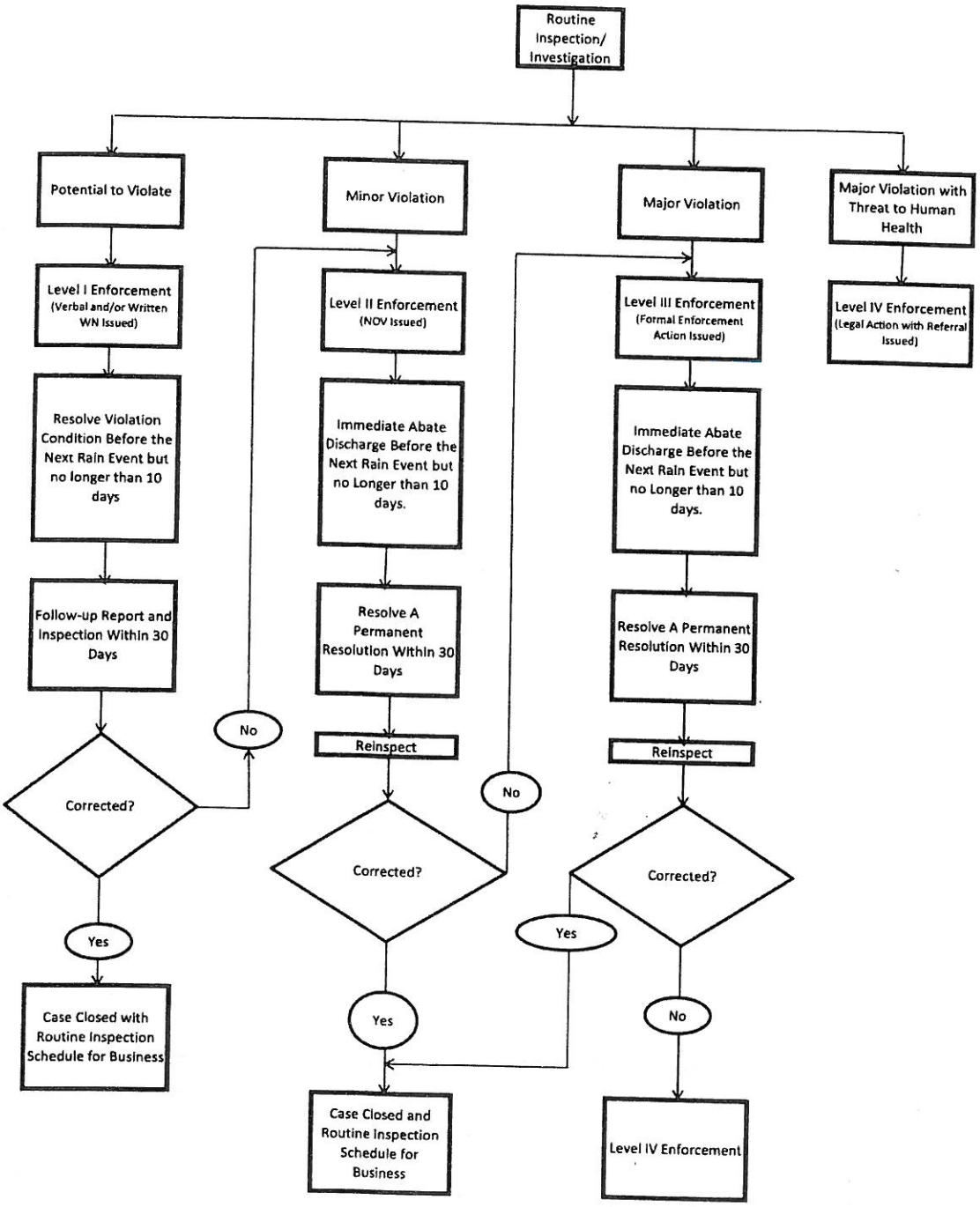

Enclosure #2
- Required Action #9

TABLE 2-2 INSPECTION FREQUENCY BY MAJOR BUSINESS TYPE				
Business Type	**Annual**	**1-2 Yrs**	**2-3 Yrs**	**5 Years**
Notice of Intent (NOI) Filers	X			
Community/Commercial Pools	X			
Enforcement Re-inspection	X			
Pretreatment Permitted Facilities	X			
Vehicle Service Facilities (General)			X	
Oil Change Shops			X	
Auto Body Shops w/ or w/o washpad			X	
Fleet Operations			X	
Retail Car Washes			X	
Food Service Facilities			X	
Fast Food Restaurants			X	
Full Service Food Restaurants			X	
Embedded Food Services (cafeteria, deli, etc.)			X	
Grocery Stores			X	
Horseboarding Facilities				X
Retail Gas Outlets			X	
Plant Nurseries		X		
Golf Courses (Food/Vehicle Operations/Grounds)		X		
Manufacturing Facilities	X			
Cement & Asphalt Batch Plants		X		
Corporation Yards	X			
Auto Dismantlers	X			

CALIFORNIA REGIONAL WATER QUALITY CONTROL BOARD
SAN FRANCISCO BAY REGION

CLEANUP AND ABATEMENT ORDER NO. R2-2010-0070

KANEKA TEXAS CORPORATION
AND
CRAIN INDUSTRIES, INCORPORATED

FOR THE PROPERTY LOCATED AT:
2451 POLVOROSA DRIVE
SAN LEANDRO, ALAMEDA COUNTY, CALIFORNIA

This Order is issued to KANEKA TEXAS CORPORATION and CRAIN INDUSTRIES, INC. (hereafter "Dischargers"), based on provisions of California Water Code ("CWC") section 13304 and 13267, which authorize the Assistant Executive Officer of the California Regional Water Quality Control Board, San Francisco Bay Region ("Regional Water Board") to issue a Cleanup and Abatement Order ("Order") where a discharger has caused or permitted waste to be discharged or deposited where it is or probably will be discharged into waters of the state and United States, and to require dischargers to submit technical and monitoring reports.

1. **Purpose of Order:** This Order requires the cleanup and abatement of expanded polypropylene resin pellets that continue to discharge and fill the estuary, wetland, and waterway areas of Oyster Bay Regional Shoreline, to prevent future waste discharges, and to submit technical and monitoring reports for the cleanup. By continuing to discharge pellets to the wetlands and leaving them there to fill the wetlands, the Dischargers are discharging without coverage under the Industrial Storm Water General Permit Order 97-03-DWQ issued by the State Water Resources Control Board ("State Water Board"), violating the Water Quality Control Plan for the San Francisco Bay Basin ("Basin Plan"), and violating the federal Clean Water Act (33 U.S.C. § 1251 et seq.).

2. **Site Location and Description**: The site is located at 2451 Polvorosa Drive, San Leandro, Alameda County, California ("Site"). The Site consists of a warehouse designed for off-loading materials from semi-trucks, and a large parking lot. The Site is approximately 300 feet east of the Oyster Bay Regional Shoreline, with Neptune Drive and railroad tracks between the Site and the wetlands. There are railroad tracks and open space north of the property. The remaining surrounding area is industrial buildings and parking lots. Storm water from the Site's parking lot drains to storm drain outfall in the wetlands. Attachment A is a site location map.

3. **Named Dischargers**: KANEKA TEXAS CORPORATION ("KANEKA") occupied the property from at least April, 2003 through approximately June, 2009. Kaneka Texas Corporation was manufacturing automobile bumpers, using expanded polypropylene resin pellets in the process. CRAIN INDUSTRIES, INC. owns the property.

4. **Regulatory Status:** Neither KANEKA nor CRAIN INDUSTRIES, INC. has ever applied for coverage under Industrial Storm Water General Permit Order 97-03-DWQ ("Industrial

General Permit”).[1] This Site is not currently nor historically subject to any additional Regional Water Board orders.

5. **Basis of Order**: The expanded polypropylene resin pellets KANEKA used in manufacturing vehicle bumper inserts have remained on the Site, continually discharging to the wetlands of Oyster Bay Regional Shoreline. Pellets have been and continue to be transported from the Site to the wetlands of Oyster Bay Regional Shoreline, both by storm water routed via the storm drain system and by direct deposition by wind. The expanded polypropylene pellets used by KANEKA are colored black or white, have a foam-like consistency, are approximately 5-10mm in diameter, and are lightweight and easily windblown or carried by small precipitation events. Due to these physical characteristics, KANEKA pellets discharged into the wetland are distinctly identifiable and easily distinguishable from other trash and debris.

   (a) On April 3, 2003, the Site was inspected by the City of San Leandro. The inspector noted that KANEKA should "try keeping feed stock material inside and away from storm drain inlets." The Inspection Report also noted “all minor violations… must be corrected within 30 days.” See City of San Leandro April 3, 2003 Inspection Report, Attachment B.

   (b) On April 27, 2005, the Site was inspected by the City of San Leandro. The inspector noted that KANEKA continues "to have a problem (sic) small Styrofoam (sic) pellet trash leaving their site. These small pellets (about the size of pea gravel) can be found around all the surrounding addresses." The inspector later referred to the “ubiquitous Styrofoam beads.” See City of San Leandro April 27, 2005, Inspection Report, Attachment C.

   (c) On October 27, 2009, Regional Water Board and State Water Board staff (collectively, “Water Board staff”) inspected two nearby facilities and visited the wetlands. Staff observed expanded polypropylene resin and hard resin pellets in the wetlands. Staff inspected the parking lot at the Site and found matching expanded polypropylene resin pellets. While many pellets have already entered the wetland, others have been blown around the Facility yard and onto neighboring properties. See photos in Attachment D.

   (d) On January 13, 2010, Water Board staff took samples and photographs in the wetlands near the facility. Staff examined approximately 100 square feet of wetlands that surrounded the Oyster Bay storm drain outfall under Neptune Drive in the northern end of the estuary, and approximately another 100 square feet of wetland in a second outfall in the southern area of the estuary. In both areas, expanded polypropylene pellets used by KANEKA were floating on surface water and deposited in mud and vegetation. At the north end of the estuary, pellets used by KANEKA were the most pervasive form of litter, with the majority of plastic debris samples collected by Water Board staff composed of KANEKA pellets. A full description of the sampling events is in Attachment E, and representative photographs are in Attachments F and G.

[1] The Industrial General Permit and information about the program may be found at: http://www.waterboards.ca.gov/water_issues/programs/stormwater/industrial.shtml

(e) Water Board staff inspected the Site after sampling in the wetlands on January 13, 2010. Staff did not enter the building, but inspected the surrounding area and parking lot. Staff collected expanded polypropylene resin pellets in the loading dock areas, at the cyclone-fenced borders, and near the railroad line border. Staff lifted the grate covering the storm drain inlet near the Site's loading docks and in the middle of the parking lot and observed expanded polypropylene resin pellets inside the storm drain inlet walls. See staff's daily logs and photos, Attachments E through I.

(f) On January 20, 2010, State Water Board staff inspected the Site and observed a profuse amount of expanded polypropylene resin pellets in the parking lot, in the drain inlet in the parking lot, and under the loading dock. See staff's inspection report, daily logs and photos, Attachment J.

(g) In February, 2010, Water Board staff and United States Environmental Protection Agency contractor, PG Environmental, LLC, inspected every business within the storm drain shared by the Site. See Attachment K. During all visits to the area between October, 2009, and February, 2010, including inspections at other plastic manufacturing facilities, the expanded polypropylene resin pellets were only found to have originated at the Site.

6. **Industrial General Permit:** The Industrial Storm Water General Permit Order 97-03-DWQ ("Industrial General Permit") is a National Pollutant Discharge Elimination System ("NPDES") permit. California Water Code section 13376 requires certain facilities to obtain coverage under the Industrial General Permit. A list of facilities required to have permit coverage can be found in Attachment 1 of the Industrial General Permit. For the most part, these facilities are identified in the federal regulations by a Standard Industrial Classification (SIC) code.[2] The Industrial General Permit requires dischargers to implement management measures that will reduce pollutants from their discharges using the best available technology economically achievable ("BAT"), and requires the development of a Storm Water Pollution Prevention Plan ("SWPPP") and a monitoring plan. Through the SWPPP, sources of pollutants are to be identified and the means to manage the sources to reduce storm water pollution are described. Coverage under the permit is obtained by filing a Notice of Intent ("NOI") and paying the required annual fee.

(a) **Permit Coverage Required:** Upon inspecting the Site, Water Board staff determined the Site's SIC code as 2673: Plastics, Foil, and Coated Paper Bags.[3] Facilities with this SIC code fall under the Industrial General Permit's Category 10 Dischargers. Category 10 Dischargers must obtain permit coverage if they have industrial materials, equipment, or activities exposed to storm water. Water Board staff determined from their inspections that the Site has industrial materials, i.e. expanded polypropylene resin pellets, exposed to storm water; therefore, the Site is required to obtain coverage under the permit and maintain coverage as long as industrial materials are exposed to storm water. Regional Water Board records indicate the Site does not have Industrial General Permit coverage.

---

[2] Standard Industrial Classification (SIC) code: http://www.osha.gov/pls/imis/sicsearch html

[3] Visit OSHA's website (see previous footnote) for a full description of SIC code 2673.

(b) **Violation:** The Dischargers have allowed, and continue to allow, the expanded polypropylene resin pellets at the Site to discharge into the wetlands via storm drain and wind. They are discharging without an Industrial General Permit and have neither filed an NOI to obtain permit coverage, nor have they ever complied with the Industrial General Permit's substantive requirements in the absence of coverage. The Dischargers 1) are not implementing any BAT management measures to control the pellets, 2) do not have a SWPPP, and 3) have not submitted any monitoring reports.

7. **Federal Clean Water Act:** The Federal Water Pollution Control Act (a.k.a. "Clean Water Act") requires any person who discharges any pollutant into a water of the United States to have an NPDES permit. The purpose of the Clean Water Act is to restore and maintain the chemical, physical, and biological integrity of the nation's waters. (33 U.S.C. §§ 1251 et seq.)

   (a) **Violation:** The Dischargers are violating Clean Water Act section 301 in that they are discharging expanded polypropylene resin pellets into and filling the waters of the state and United States without complying with the NPDES program. (33 U.S.C. 1311.) Water Board records indicate that the Dischargers have not enrolled in the Industrial General Permit program and have not obtained coverage under any NPDES permit.

8. **Basin Plan Discharge Prohibitions:** The December 22, 2006, Water Quality Control Plan for the San Francisco Bay Basin ("Basin Plan")[4] designates beneficial uses and water quality objectives for waters of the State, and includes programs to achieve water quality objectives. The existing beneficial uses for the wetlands near and in Oyster Bay Regional Shoreline include: Estuarine Habitat ,[5] Preservation of Rare and Endangered Species, Water Contact Recreation, Non-Contact Water Recreation, Saltwater Habitat, Spawning, and Wildlife Habitat.

   (a) **Discharge Prohibition 6:** Prohibits all conservative toxics and deleterious substances to waters of the Basin above those levels which can be achieved by a program acceptable to the Regional Water Board. The expanded polypropylene resin pellets are deleterious in that fish, birds and other marine animals eat the pellets but are unable to digest them, thus starving to death. This process is described further in the following Adverse Impacts to Animals section. The expanded polypropylene resin pellets will take decades or centuries to fully degrade and may concentrate and transport other, persistent, organic pollutants that may have toxic effects on plants, fish and wildlife.[6]

---

[4] The Basin Plan may be found at http://www.waterboards.ca.gov/sanfranciscobay/basin_planning.shtml

[5] The Basin Plan describes estuarine habitat beneficial uses as: uses of water that support estuarine ecosystems, including, but not limited to, preservation or enhancement of estuarine habitats, vegetation, fish, shellfish, or wildlife (e.g., estuarine mammals, waterfowl, shorebirds), and the propagation, sustenance, and migration of estuarine organisms.

[6] Interagency Marine Debris Coordinating Committee, National Oceanic and Atmospheric Administration (NOAA), U.S. Department of Commerce, *Interagency Report on Marine Debris Source, Impacts, Strategies & Recommendations, (*August, 2008), p. 24. *See also* National Oceanic and Atmospheric Administration (NOAA),

(b) **Discharge Prohibition 7:** Prohibits the discharge of rubbish, refuse, bark, sawdust, or other solid wastes into surface waters or at any place where they could contact or where they would eventually be transported to surface waters, including flood plain areas. The expanded polypropylene resin pellets are a solid waste in that they are associated with human habitation from manufacturing operations. (CWC § 13050(d).)

(c) **Violations:** The Dischargers are violating these Basin Plan Prohibitions by discharging expanded polypropylene resin pellets, a deleterious solid waste, into and filling the wetlands. The expanded polypropylene resin pellets are negatively impacting the wetlands' beneficial uses by impacting the habitat and wildlife in the estuary.

9. **Adverse Impacts to Animals:** The expanded polypropylene resin pellets that are discharging into the wetlands are potentially deleterious to birds, fish, and other marine animals. Wildlife may feed on small plastic pieces because they resemble food, and field studies have linked consumption of plastic with negative biological impacts. Accumulation of plastic pieces in an animal's stomach can cause feelings of satiation, potentially leading to the animal's malnutrition or starvation.[7] Plastics can also absorb persistent organic pollutants from their surrounding aquatic environments, with studies finding that persistent organic pollutants absorbed by plastics mirror levels of the pollutants found in sediment-dwelling invertebrates, such as mussels.[8] Plastic debris may then mediate the transfer of these pollutants to wildlife, as the ingested mass of plastic material has been observed to correlate positively to the persistent organic pollutant concentration in birds.

10. **Watershed and Topography:** The Site drains to the slough near the parking area for the Oyster Bay Regional Shoreline access point, which in turn is tidally connected to the San Francisco Bay. Additionally, the Site is close enough to the slough that wind-blown expanded polypropylene pellets can be discharged from the Site directly to the slough and bay. See storm drain maps, Attachment L.

11. **Endangered Species Acts:** United States Geological Survey ("USGS") has surveyed and mapped a 7.5 foot topographic quad that includes the wetland area of Oyster Bay Regional Shoreline. In the area, USGS has identified certain species that may be present that are federally designated as threatened and endangered under the Endangered Species Act (16 U.S.C. §§ 1531-44) and the California Endangered Species Act (CA Fish and Game Code sec. 2050 et. al.). See Table 1.

U.S. Department of Commerce, *Proceedings of the International Research Workshop on the Occurrence, Effects, and Fate of Microplastic Marine Debris,* (September 9-11, 2008), p. 26.

[7] *Id.*

[8] National Oceanic and Atmospheric Administration (NOAA), U.S. Department of Commerce, *Proceedings of the International Research Workshop on the Occurrence, Effects, and Fate of Microplastic Marine Debris,* (September 9-11, 2008), p. 9.

Table 1. Endangered and Threatened Species[9]

Scientific Name	Common Name	Federal	California
Rallus longirostris obsoletus	California clapper rail	Endangered	Endangered
Sternula antillarum browni	California least tern	Endangered	Endangered
Reithrodontomys raviventris	salt-marsh harvest mouse	Endangered	Endangered
Ambystoma californiense	California tiger salamander	Threatened	Candidate Endangered
Charadrius alexandrinus nivosus	western snowy plover	Threatened	None

12. **Future Changes to Cleanup Standards:** The goal of this Cleanup and Abatement Order is to restore the beneficial uses of the wetlands area affected by the discharges from the Site. Due to the nature of the discharges, it is unknown at this time whether full restoration of beneficial uses to the wetlands is possible. If full restoration of beneficial uses is not technologically or economically achievable within a reasonable period of time, then the Dischargers may request modification to the cleanup standards. Conversely, if new technical information indicates that cleanup standards can be surpassed, the Regional Water Board may decide that further cleanup actions should be taken. Any requests to modify the standards set pursuant to this Order must be submitted in writing to the Regional Water Board for approval.

13. **CEQA:** This enforcement action is being undertaken by a regulatory agency to enforce a water quality law. Such action is categorically exempt from provisions of the California Environmental Quality Act ("CEQA") according to Guidelines section 15321 in Article 19, Division 3, Title 14 of the California Code of Regulations. This Order requires the submittal of detailed work plans that address cleanup activities. The proposed activities under the work plans are not yet known, but implementation of the work plans may result in significant physical impacts to the environment that must be evaluated under CEQA. The appropriate lead agency will address the CEQA requirements prior to implementing any work plan that may have a significant impact on the environment.

14. **Conclusion:** Based on the above findings, Water Board staff concludes that the Dischargers have caused or permitted waste to be discharged or deposited where it can be and has been discharged into waters of the state and the United States, and have created and threatened to create a condition of pollution. The discharged wastes have resulted in unnecessary and avoidable adverse impacts to beneficial uses of waters of the state and United States without coverage under the Industrial General Permit, and in violation of the federal Clean Water Act, and the Basin Plan. This Order, therefore, contains tasks for investigating, cleaning up, and abating existing and future impacts to Oyster Bay Regional Shoreline.

[9] California Natural Diversity Database, California Department of Fish and Game.

IT IS HEREBY ORDERED, pursuant to California Water Code sections 13304 and 13267 that the Dischargers, or their agents, successors, or assigns, shall clean up and abate the effects described in the above findings as follows:

A. Prohibitions

1. Discharging any pollutant, including expanded polypropylene resin pellets, without coverage under the Industrial General Permit is prohibited.

2. Discharging any pollutant, including expanded polypropylene resin pellets, without complying with the NPDES permit program is prohibited.

3. Discharging any wastes, including solid wastes such as expanded polypropylene resin pellets, that will degrade, or threaten to degrade, water quality or adversely affect, or threaten to affect beneficial uses of the waters in violation of the Basin Plan is prohibited.

B. Cleanup and Abatement Tasks

1. Corrective Action Plan for Oyster Bay Regional Shoreline

COMPLIANCE DATES:

SUBMIT PLAN	**AUGUST 9, 2010**
BEGIN IMPLEMENTING APPROVED PLAN NO LATER THAN	**OCTOBER 11, 2010**

The Dischargers shall submit for approval by the Regional Water Board's Assistant Executive Officer a Corrective Action Plan to remove expanded polypropylene resin pellets discharged into and filling the wetland and waterway areas of Oyster Bay Regional Shoreline. The Corrective Action Plan shall be designed to restore and protect water quality beneficial uses. Attachment M is a site map generally indicating the areas for cleanup and abatement under the Corrective Action Plan for Oyster Bay Regional Shoreline.

The Corrective Action Plan shall include a schedule for completing each task and all associated subtasks, including a listing of proposed dates to submit technical and monitoring reports to the Regional Water Board. Prior to implementing the Corrective Action Plan, the Dischargers must obtain all required permits from and follow proper procedures for: the Regional Water Board, East Bay Regional Park District, California Department of Fish and Game, the United States Army Corps of Engineers, the United States Fish and Wildlife Service, the City of San Leandro, the San Francisco Bay Conservation and Development Commission (BCDC), and any other agency that requires a permit for the work.

This Corrective Action Plan shall be prepared by, or under the supervision of, signed, and certified by a Registered Civil Engineer licensed by the State of California, shall include

input from a professional wetland biologist and/or a wetland restoration specialist, and shall include the following minimum elements:

(a) Removal of all expanded polypropylene resin pellets from the wetlands in a manner that is not detrimental to the health of the estuary and wetlands or any other biologically sensitive area. If there is no reasonable method to cleaning up the wetlands in their entirety, provide alternative plans to cleanup as many expanded polypropylene resin pellets as possible and a mitigation plan in the same or similar wetlands to compensate for the discharged pellets that are not recoverable.

A mitigation plan shall include monitoring for mitigation success and shall include an implementation schedule, appropriate design details, success criteria, and significant monitoring periods. Monitoring periods may be extended by the Regional Water Board Assistant Executive Officer if success criteria are not met as scheduled.

(b) Assessment of the species present, potential negative biological effects from the discharges on the wildlife, including the number and size of any and all dead fish, birds, or other animals large enough to have ingested an expanded polypropylene resin pellet.

(c) Restoration of the wetlands' function with insurance of their full re-establishment by carefully calculated design details, specified scheduled success criteria, and a minimum period of five years of annual monitoring for those criteria. Monitoring periods may be extended by the Regional Water Board Assistant Executive Officer if success criteria are not met in a timely manner.

(d) Actions to address any adverse impacts the restoration may have on the Site's hydrology and channel morphology.

The Corrective Action Plan must be submitted to the Regional Water Board's Assistant Executive Officer for approval no later than August 9, 2010. The Regional Water Board's Assistant Executive Officer will review the corrective action plan and approve it or require changes within two months of receiving the proposed plan. The Dischargers will commence implementing the approved plan no later than October 11, 2010. The Dischargers must complete the corrective action plan's tasks and comply with its schedule.

2. Corrective Action Plan for 2451 Polvorosa Drive and Adjacent Areas

COMPLIANCE DATES:

SUBMIT PLAN	**AUGUST 9, 2010**
BEGIN IMPLEMENTING APPROVED PLAN NO LATER THAN	**OCTOBER 11, 2010**

The Dischargers shall submit for approval by the Regional Water Board's Assistant Executive Officer a Corrective Action Plan to remove expanded polypropylene resin pellets from 2451 Polvorosa Drive (the Site) and immediately adjacent areas where there are pellets, which include the upland areas that continue to be a source of pellets discharging to the wetlands. Attachment N is a map generally outlining the Site and adjacent areas for cleanup and abatement under the Corrective Action Plan for 2451 Polvorosa Drive and Adjacent Areas.

The Corrective Action Plan shall include a schedule for completing each task and all associated subtasks, including a listing of proposed dates to submit technical and monitoring reports to the Regional Water Board. Prior to implementing the Corrective Action Plan, the Dischargers must obtain all required permits from and follow proper procedures for the Regional Water Board, City of San Leandro, and any other agency with jurisdiction. After the Regional Water Board's Assistant Executive Officer approves the Corrective Action Plan, the Dischargers must complete its tasks and comply with its schedule.

This Corrective Action Plan shall be prepared by, or under the supervision of, signed, and certified by a Registered Civil Engineer licensed by the State of California, shall include input from a professional wetland biologist and/or a wetland restoration specialist, and shall include the following, minimum elements:

(a) Before removing any pellets, to ensure that the removal activity will do no harm to protected species, complete a biological assessment of the upland areas including the Site and neighboring properties. The assessment shall identify any protected plants or wildlife that may be present, and ensure that cleanup activities will not harm wildlife.

(b) Remove all expanded polypropylene resin pellets from the entire Site, and surrounding upland areas where pellets have discharged in a manner that is not detrimental to the health of the estuary and wetlands or any other biologically sensitive area per the results of the biological assessment required above in section (a).

(c) Install and maintain any applicable measures to ensure that all ongoing or potential future discharges of expanded polypropylene resin pellets are eliminated from storm water discharges.

The Regional Water Board's requirements that you submit technical and monitoring reports via the Corrective Action Plans are made pursuant to California Water Code section 13267. The Regional Water Board needs the required information in these reports to ensure that the Dischargers will restore the Site and affected wetlands to their unimpaired condition in a manner consistent with water quality objectives contained in the Basin Plan. KANEKA is required to submit this information because KANEKA is the entity that used the expanded polypropylene resin pellets in manufacturing automobile bumpers. CRAIN INDUSTRIES, INC. is required to submit this information because they are the property owners and the pellets on the property continue to enter the storm drains and wetlands, evidenced during the site inspections described above.

The Corrective Action Plan must be submitted to the Regional Water Board's Assistant Executive Officer for approval no later than August 9, 2010. The Regional Water Board's Assistant Executive Officer will review the corrective action plan and approve it or require changes within two months of receiving the proposed plan. The Dischargers will commence implementing the approved plan no later than October 11, 2010. The Dischargers must complete the corrective action plan's tasks and comply with its schedule.

3. Wetland Tracker System

COMPLIANCE DATE: SEVEN DAYS FROM ASSISTANT EXECUTIVE OFFICER'S APPROVAL OF BOTH OF THE CORRECTIVE ACTION PLANS

It has been determined through regional, state, and national studies that tracking of mitigation/restoration projects must be improved to better assess the performance of these projects, following monitoring periods that last several years. To effectively carry out the State's No Net Loss Policy for wetlands, the State needs to closely track both wetland losses and mitigation/restoration project success. Therefore, this Order requires the Dischargers to use a standard form to provide site information related to impacts and mitigation/restoration measures for the Site.

The Dischargers are required to use the standard Wetland Tracker form to provide Site information describing impacts and mitigation/restoration measures within seven days from the approval of the Corrective Action Plan. The completed Wetland Tracker form shall be submitted electronically to wetlandtracker@waterboards.ca.gov or shall be submitted as a hard copy to both: 1) San Francisco Bay Regional Water Quality Control Board, to the attention of Wetland Tracker, and, 2) San Francisco Estuary Institute, 7770 Pardee Lane, Oakland, CA 94621-1424, to the attention of Mike May.[10]

4. Industrial General Permit

COMPLIANCE DATES:

SUBMIT NOI	**MAY 13, 2010**
SUBMIT SWPPP	**JUNE 7, 2010**

CRAIN INDUSTRIES is required to obtain Industrial General Permit coverage for the ongoing discharge of expanded polypropylene resin pellets from the Site. CRAIN INDUSTRIES shall file a Notice of Intent (NOI) with the State Water Resources Control

[10] An electronic copy of the form and instructions can be downloaded at: http://www.waterboards.ca.gov/sanfranciscobay/certs.shtml. Site information concerning impacts and mitigation/restoration will be made available at: http://www.wetlandtracker.org.

Board, and send a copy of the NOI and a copy of payment verification for the annual permit fee to the Regional Water Board.

CRAIN INDUSTRIES shall submit to the Regional Water Board by for the Assistant Executive Officer's approval a Storm Water Pollution Prevention Plan (SWPPP) prepared pursuant to the requirements of the Industrial General Permit, as required in the permit.

Regional Water Board mailing address:
San Francisco Bay Regional Water Board
1515 Clay Street, Suite 1400
Oakland CA 94612.
Attn: Industrial General Permit

Upon completion of all approved corrective actions required by this Order at the Site, CRAIN INDUSTRIES may submit an application for termination of coverage from the Industrial General Permit to the Regional Water Board.

C. Provisions

1. **Good Operation and Maintenance of Best Available Technology:** The Dischargers shall control all pollutant discharges from the Site using best available technology economically achievable (BAT) to prevent and reduce pollutants. The Dischargers shall maintain in good working order and operate as efficiently as possible any facility or control system installed to achieve compliance with the requirements of this Order.

2. **Cost Recovery:** The Dischargers are and shall be liable, pursuant to California Water Code section 13304, to the Regional Water Board for all reasonable costs actually incurred by the Regional Water Board and associated agencies to investigate unauthorized discharges of waste and to oversee cleanup of such waste, abatement of the effects thereof, or other remedial action, required by this Order. Such costs include, but are not limited to, staff time for investigation of the discharge, preparation of this Order, review of reports and correspondence submitted pursuant to this Order, work to complete the Tasks specified in this Order, and communications between Water Board staff and parties associated with the cleanup and abatement of the discharged waste, including the Dischargers, City, interested members of the public, and other regulatory agencies. The Site has been enrolled in a State Water Resources Control Board managed reimbursement program. Reimbursement shall be made pursuant to this Order and according to the procedures established in that program. Any disputes raised by the Dischargers over reimbursement amounts or methods used in that program shall be consistent with the dispute resolution procedures for that program.

3. **Contractor/Consultant Qualifications:** All technical documents shall be prepared by, or under the supervision of, signed, and certified by a Registered Civil Engineer licensed by the State of California.

4. **Report Any Changes in Ownership or Occupancy:** The Dischargers shall file a written report on any changes in the Site's ownership or occupancy associated with the Site described in this Order. This report shall be filed with the Regional Water Board within 30 days following a change in Site occupancy or ownership.

5. **Document Distribution:** Electronic copies of all correspondence, technical reports, and other documents pertaining to compliance with this Order shall be provided upon request within two weeks of the established task deadline to the following recipients:
   (a) City of San Leandro
   (b) California Department of Fish and Game
   (c) United States Army Corps of Engineers
   (d) United State Fish and Wildlife Service

   The Assistant Executive Officer may modify this distribution list as needed.

6. **Delayed Compliance:** The Dischargers shall notify the Regional Water Board Assistant Executive Officer if they are delayed, interrupted or prevented from meeting any of the compliance dates specified in this Order or a key milestone in their approved Corrective Action Plans. The Dischargers may request in writing an extension for compliance dates, stating the basis for their request and what new compliance dates they are requesting. The Regional Water Board has the authority to revise this Order.

7. **Enforcement:** If, in the opinion of the Assistant Executive Officer, the Dischargers fail to comply with the provisions of this Order, the Assistant Executive Officer may pursue further enforcement action. The Assistant Executive Officer may refer this matter to the Attorney General for judicial enforcement, issue a complaint for administrative civil liability, or any take any other applicable enforcement action. Failure to comply with this Order may result in the assessment of an administrative civil liability up to $10,000 per violation per day, pursuant to California Water Code sections 13350, 13385, and/or 13268. The Regional Water Board reserves its right to take any enforcement actions authorized by law.

8. **Evidentiary Hearing before the Regional Water Board:** Any person affected by this action of the Regional Water Board may request an evidentiary hearing before the Regional Water Board. The Regional Water Board's Executive Officer may elect to hold an informal hearing or a "paper hearing" in lieu of scheduling a hearing before the Regional Water Board itself. If you decide to request an evidentiary hearing, send your request to the San Francisco Bay Regional Water Board Executive Officer, Attn: Bruce Wolfe. Please consider the following carefully:

   (a) The Regional Water Board must receive your request within **30 calendar days** of the date of this Order.

   (b) Your request must include all comments, technical analysis, documents, reports, and other evidence that you wish to submit for the evidentiary hearing. However, please note that the administrative record will include all materials the Regional

Water Board has previously received regarding this Site. You are not required to submit documents that are already in the record.

(c) The Executive Officer or Regional Water Board may deny your request for a hearing after reviewing the evidence.

(d) If you do not request an evidentiary hearing, the State Water Board may prevent you from submitting new evidence in support of a State Water Board petition.

(e) Your request for an evidentiary hearing, if you submit one, does not stay the effective date of the Order, whether or not a hearing is scheduled.

(f) A request for a hearing does not extend the 30-day period to file a petition with the State Water Board (see below). However, you may ask the State Water Board to hold the petition in abeyance while your request for a hearing is pending. (Refer to CCR Title 23 section 2050.5(d).)

9. **State Water Board Petition:** Any person aggrieved by this action may petition the State Water Board to review the action in accordance with California Water Code section 13320 and Title 23, California Code of Regulations, section 2050 et al. The State Water Board, Office of Chief Counsel, must receive the petition by 5:00 p.m. 30 days after the date this Order becomes final (if the thirtieth day falls on a weekend or state holiday, the petition must be received by the next business day).[11] This Order is effective upon the date of signature.

10. **Periodic Cleanup and Abatement Order Review**: The Regional Water Board may review this Order periodically and may revise it when necessary.

_____ _May 6, 2010_

Thomas Mumley
Assistant Executive Officer

Date

Attachment A: Site Location Map
Attachment B: City of San Leandro KANEKA Inspection, dated April 3, 2003
Attachment C: City of San Leandro KANEKA Inspection, dated April 27, 2005
Attachment D: Photos from October 27, 2009: Part of Metro Poly Notice of Violation, dated March 9, 2010
Attachment E: Daily Log for January 13 – January 14, 2010 for Dylan Seidner
Attachment F: Portion of Photo Log for Greg Gearheart on January 13, 2010

[11] Instructions for petitioning will be provided upon request or you may view them at: http://www.waterboards.ca.gov/public_notices/petitions/water_quality/index.shtml

Attachment G: Portion of Photo Log for Danny Pham on January 13, 2010
Attachment H: Daily Log for Greg Gearheart, January 13, 2010
Attachment I: Daily Log for Chris Haynes, January 13, 2010
Attachment J: Inspection Report, Daily Log for Greg Gearhart, Oyster Bay Regional Park Wetland Field Log for Chris Haynes, and Photos for January 20, 2010
Attachment K: PG Environmental Industrial Storm Water Inspection Report, Photos, and Tables
Attachment L: Storm Drain Maps from City of San Leandro
Attachment M: Site Map for Corrective Action Plan for Oyster Bay Regional Shoreline
Attachment N: Site Map for Corrective Action Plan for 2451 Polvorosa Drive and Adjacent Areas