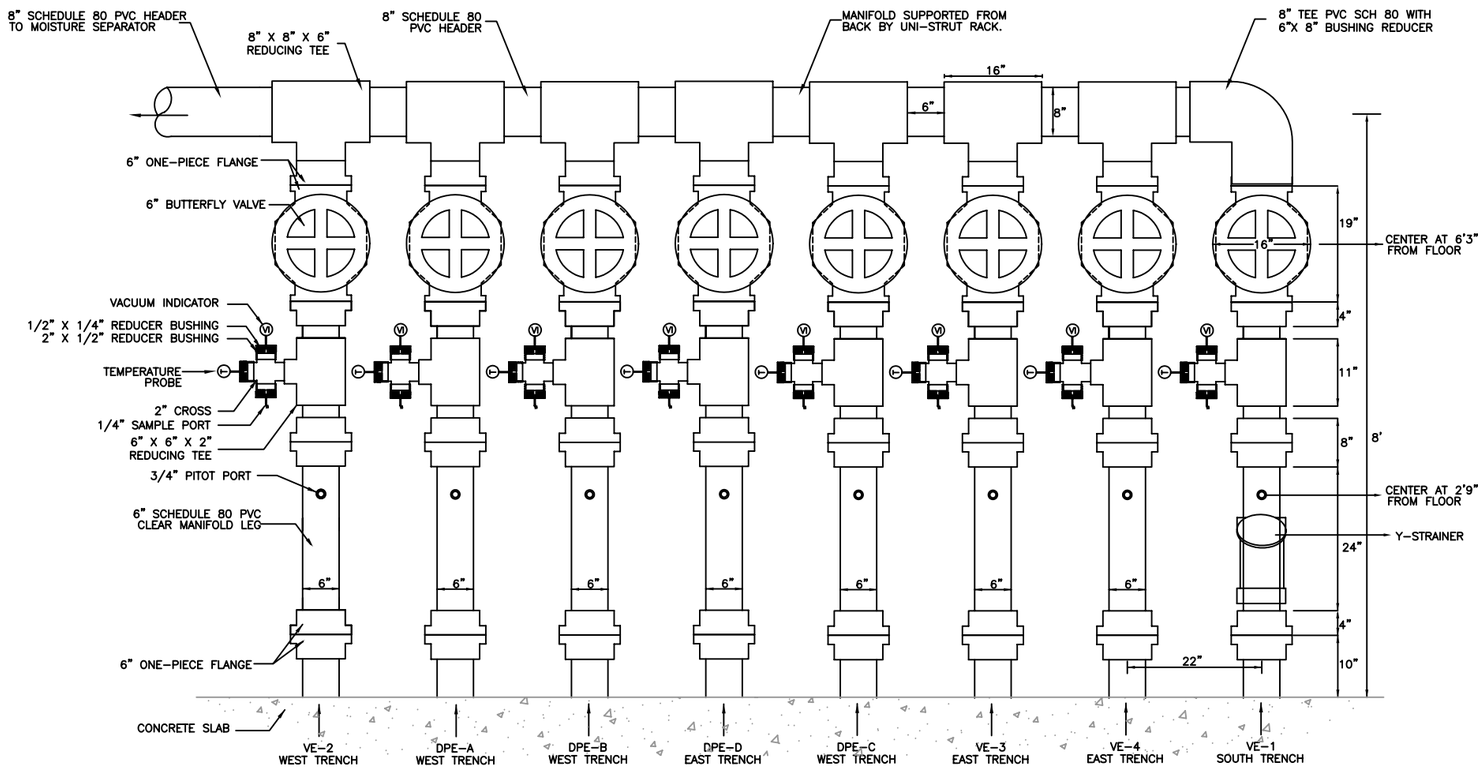

DUAL PHASE AND VAPOR EXTRACTION MANIFOLD DETAIL

0 0.5' 1.0'

APPROXIMATE SCALE IN FEET

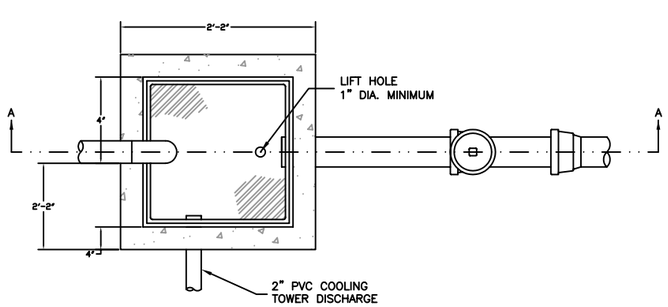

SAMPLING BOX PLAN

NOT TO SCALE

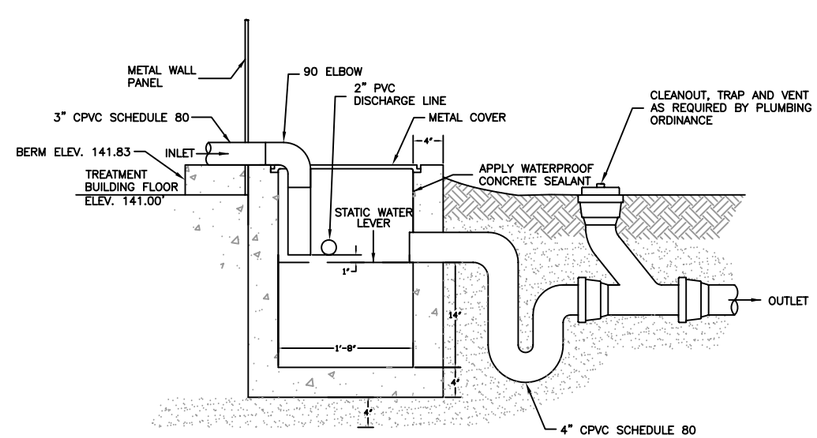

SECTION A - A

NOT TO SCALE

AS-BUILT

LEGEND:

PROPOSED CONCRETE SLAB AND FOOTINGS

PROPOSED SAND BACKFILL OR APPROVED NATIVE MATERIAL

PROPOSED SURFACE COMPLETION PER DRAWING C-15A AND C-16

NOTES:

1. THE MANIFOLD SYSTEM SHALL BE SUPPORTED BY A UNI-STRUT RACK SYSTEM THAT IS BRACED TO THE BUILDING COLUMNS. THE RACK SYSTEM SHALL BE INSPECTED IN ACCORDANCE WITH SPECIFICATION SECTION 13080-SEISMIC PROTECTION FOR MISCELLANEOUS EQUIPMENT.
2. THE ENTIRE MANIFOLD SYSTEM SHALL BE CONSTRUCTED FROM SCHEDULE 80 PVC TO WITHSTAND HIGH VACUUM AND HIGH CONTAMINANT CONCENTRATION EXTRACTED FROM ERH TREATMENT AREA.
3. PIPE SUPPORTS AND BRACKETS (NOT SHOWN) SHALL BE USED ACCORDING TO PIPE MANUFACTURER'S RECOMMENDATIONS.
4. PITOT PORT TO CONSIST OF A 3/4" NPT SWAGE LOCK BORE THROUGH CLEAR MANIFOLD LEG AND PLUG.
5. THE APPROVAL OF THE COUNTY ENGINEER FOR SAMPLING BOX MUST BE OBTAINED BEFORE INSTALLATION. ELEVATE THE SIDE WALLS ABOVE THE SUPRROUNDING GROUND SURFACE TO EXCLUDE STORM WATER.

MISCELLANEOUS PIPE DETAILS

PEMACO SUPERFUND SITE
5050 EAST SLAUSON AVENUE
MAYWOOD, CALIFORNIA

PREPARED FOR:
U.S. Environmental Protection Agency
Region IX
San Francisco, California

PREPARED BY:
JACOB & HEFNER ASSOCIATES
15375 BARRANCA PARKWAY, SUITE J-101
IRVINE, CALIFORNIA 92618
PHONE: (949) 453-1045

SCALE: AS SHOWN	APPROVED	DATE: 07/19/2007
DESIGNED: JW & PV	AS BUILTS	DRAWING
DRAWN: CBG & JBP		C-9
CHECKED: JW		