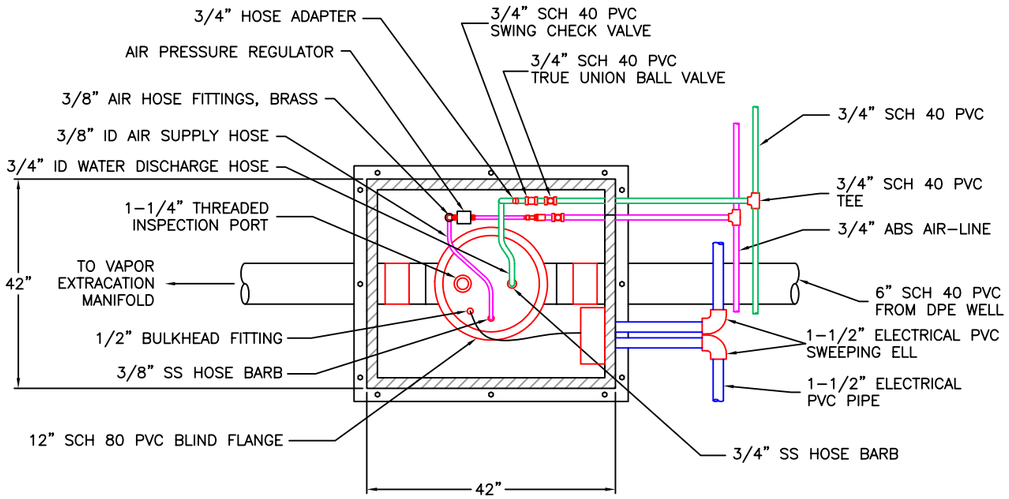

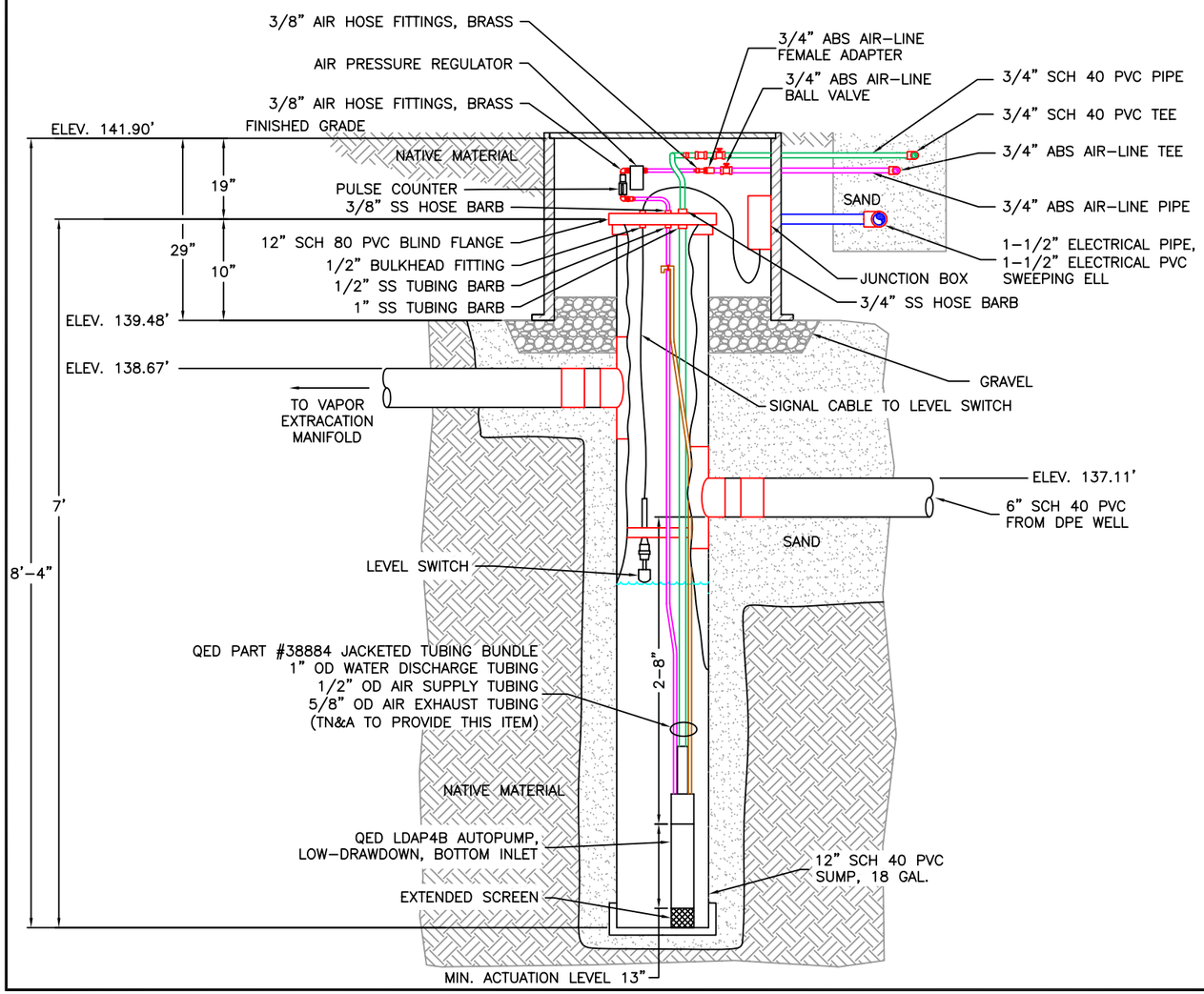

PART LIST FOR CONDENSATE SUMP RETROFIT

QTY	UNIT	ITEM DESCRIPTION	MATERIAL/SCHEDULE
QED PART LIST			
4	EA	QED 4" LOW-DRAWDOWN AP4 BOTTOM INLET	STAINLESS STEEL
4	EA	OPTIONAL EXTENDED SCREEN	STAINLESS STEEL
4	EA	QED FILTER REGULATOR	TYP.
4	EA	QED CYCLE COUNTER	TYP.
4	SET	WELLHEAD ASSEMBLIES FOR 12" FLANGE	STAINLESS STEEL
4	SET	SUBMERSIBLE FITTINGS KIT FOR TUBING BUNDLE	STAINLESS STEEL
--	--	TN&A TO PROVIDE QED PART #38884 JACKETED TUBING BUNDLE	
VAULT PART LIST (TN&A)			
4	EA	3/4" ID WATER DISCHARGE HOSE	NYLON
4	EA	3/4" HOSE ADAPTER	SCH 40 PVC
4	EA	3/4" SWING CHECK VALVE	SCH 40 PVC
4	EA	3/4" TRUE UNION BALL VALVE	SCH 80 PVC
4	SET	HOSE FITTINGS FOR 3/4" ID WATER DISCHARGE HOSE	BRASS
4	EA	3/8" ID AIR SUPPLY HOSE	NYLON
4	EA	3/4" ABS AIR-LINE FEMALE ADAPTER	ABS
4	EA	3/4" ABS AIR-LINE BALL VALVE	ABS
4	SET	HOSE FITTINGS FOR 3/8" ID AIR SUPPLY HOSE	BRASS
SUBSURFACE PART LIST (TN&A)			
100	FT	3/4" WATER DISCHARGE PIPE	SCH 40 PVC
5	EA	3/4" SCH 40 PVC TEE	SCH 40 PVC
10	EA	3/4" SCH 40 PVC 90° ELBOW	SCH 40 PVC
5	EA	3/4" SCH 40 PVC COUPLING	SCH 40 PVC
1	EA	PRESSURE REGULATOR FOR PUMP AIR SUPPLY	TYP
100	FT	3/4" ABS AIR SUPPLY PIPE	ABS
5	EA	3/4" ABS AIR-LINE TEE	ABS
10	EA	3/4" ABS AIR-LINE 90° ELBOW	ABS
5	EA	3/4" ABS AIR-LINE COUPLING	ABS

NOTES:

1. THIS RETROFIT IS ONLY APPLIED FOR DPE-A, DPE-B, DPE-C, AND DPE-D CONDENSATE SUMPS. REFER TO DRAWING C-10A FOR VE-2, VE-3, AND VE-4 CONDENSATE SUMP DETAILS.
2. THE INTENT OF THE CONDENSATE SUMPS IS TO COLLECT LIQUID CONDENSATE FROM "DESIGNED" LOW ELEVATION POINTS WITHIN THE DUAL PHASE EXTRACTION AND VAPOR EXTRACTION PROCESS PIPING.
3. DESIGNED PIPING LOW POINTS FOR ALL MAIN TRENCHES OCCUR JUST PRIOR TO ENTRY TO THE TREATMENT COMPOUND. ONE CONDENSATE SUMP IS LOCATED IN THE FIELD TO COLLECT CONDENSATE FROM THE BRANCH LINE TO DAB-8.
4. INSTALLATION OF ALL PIPING SYSTEMS SHALL BE PERFORMED IN ACCORDANCE WITH SPECIFICATION SECTION 15400-PROCESS PIPING.
5. CONDENSATE SUMP VAULTS SHALL BE CONSTRUCTED TO H-10 AND H-20 LOADING REQUIREMENTS IN THE PARK AREA AND IN THE ROADWAYS, RESPECTIVELY.
6. CONDENSATE SUMP VAULTS MAY BE CONSTRUCTED OF CONCRETE OR METAL. CONDENSATE SUMP VAULT LIDS SHALL BE CONSTRUCTED OF METAL, BE FLUSH TO GRADE AND BE SPRING OR GAS SHOCK ASSISTED. CONDENSATE SUMP VAULT FOOTINGS SHALL BE CONSTRUCTED OF CONCRETE AND ARE ONLY REQUIRED BENEATH ROADWAYS.
7. EXCAVATION AND BACKFILL OF VAULTS SHALL BE PERFORMED IN ACCORDANCE WITH SPECIFICATION SECTION 02211-EARTHWORK AND SECTION 02205-SOIL MATERIALS.
8. PIPE SUPPORTS AND BRACKETS SHALL BE USED ACCORDING TO PIPE MANUFACTURER'S RECOMMENDATIONS.
9. FLANGE SEAL AND FLANGE PENETRATION MUST BE RATED FOR 25 IN HG VACUUM.
10. PLUMBING AND ELECTRICAL INSIDE VAULT MUST BE CONFIGURED FOR "QUICK REMOVAL AND MAINTENANCE OF DROP TUBE AND LEVEL SENSOR.

AS-BUILT

CONDENSATE SUMP RETROFIT DETAIL

PEMACO SUPERFUND SITE
5050 EAST SLAUSON AVENUE
MAYWOOD, CALIFORNIA

PREPARED FOR:
U.S. Environmental Protection Agency
Region IX
San Francisco, California

PREPARED BY:
T N & Associates, Inc.
Engineering and Science

SCALE: AS SHOWN
DESIGNED: JW & DC
DRAWN: DC
CHECKED: JW
APPROVED
DRAFT
DATE: 06/05/07
DRAWING C-10D
REV 1