# *BRINKER COMPRESSOR STATION CHARACTERIZATION REPORT*

***Salem Township, Columbiana County, Ohio***

***12 June 2001***

***Prepared for Columbia Gas Transmission Corporation***

***By:***

***IT Corporation***
***Environmental Standards, Inc.***

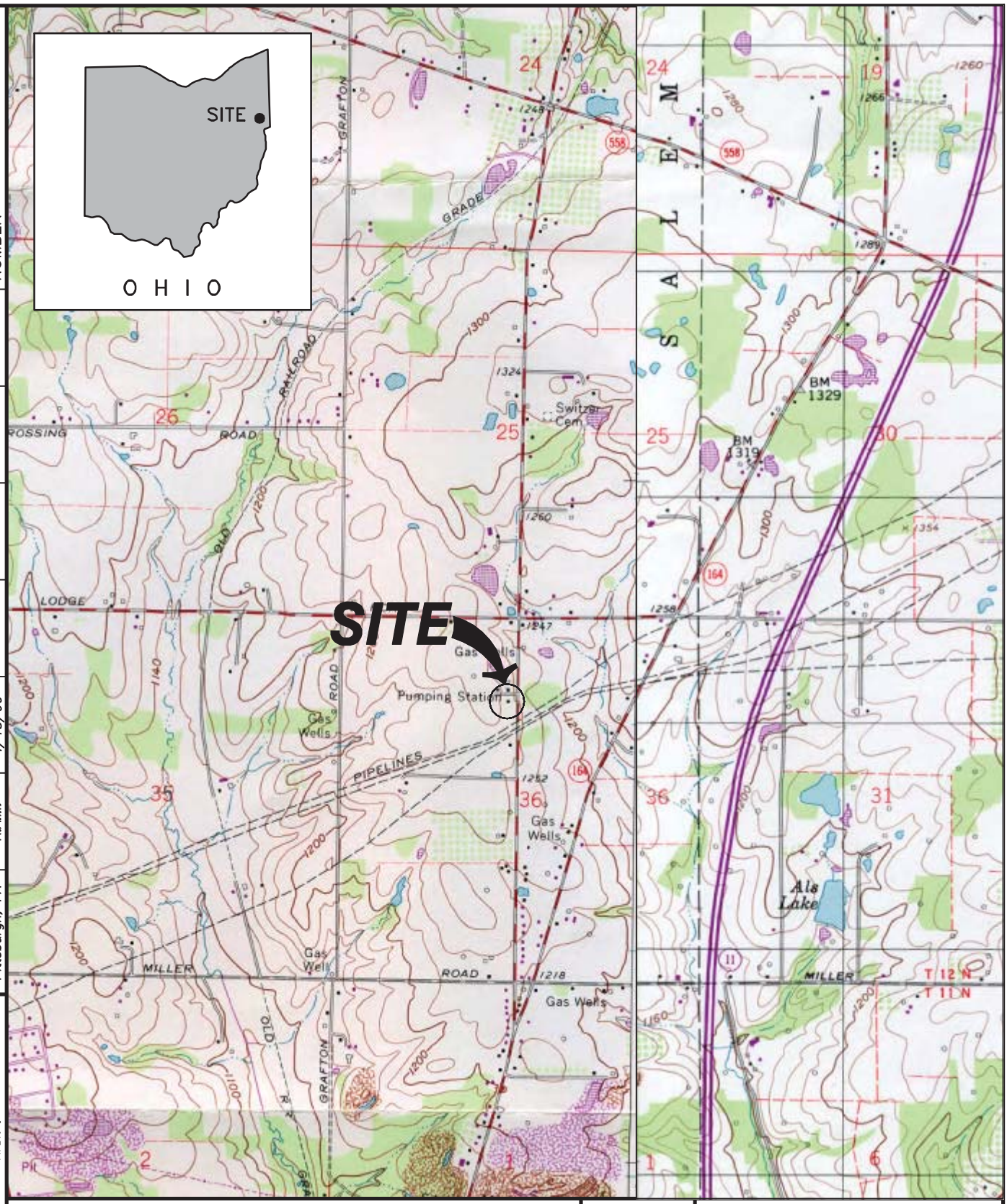


| DRAWING NUMBER | APPROVED BY | CHECKED BY | DRAWN BY | | OFFICE |
|---|---|---|---|---|---|
| 805913–A1 | | | R.A.M. | 4/18/00 | Pittsburgh, PA |

O:\Project\Columbia Gas\Brinker\805913A1.dwg
Plot Date/Time: 12/29/00 01:55pm Image:
Format Revised: 12/15/99 Xref: .

SCALE

0 2000 4000 FEET

REFERENCE:

U.S.G.S. 7.5 MIN TOPOGRAPHIC MAP OF LISBON, OHIO, DATED 1960 PHOTOREVISED 1984, SCALE: 1" = 2000'.

IT CORPORATION

COLUMBIA GAS TRANSMISSION CORPORATION

FIGURE 1–1

SITE LOCATION MAP

BRINKER COMPRESSOR STATION
COLUMBIANA COUNTY, OHIO

# *2.0 ENVIRONMENTAL SETTING*

## *2.1 Physical Setting*

The site is situated on an approximate 7-acre parcel of land located in Salem Township in Columbiana County, Ohio. The site is approximately mid-way between the towns of Leetonia and Lisbon, Ohio. The site is located in the north central part of the county where the topographic relief is gently sloping to sloping in most places and hilly near the stream valleys. Based on the United States Geological Survey (USGS) topographic map (Figure 1-1), the site elevation is approximately 1,280 feet above mean sea level (AMSL). Surrounding ridges within one mile of the station reach elevations of 1,324 feet AMSL.

## *2.2 Climate*

The climate of Columbiana County is continental. Precipitation is favorably distributed during the warm part of the year. Seasonably, precipitation is greatest in June and July and is least in mid-winter. Average annual precipitation is 37.6 inches per year. Average annual temperature is 49.4 degrees Fahrenheit ($^0$F). Temperature and precipitation data are based on a 30-year record, from 1930 through 1960 at Millport, Ohio. (Soil Survey of Columbiana County, Ohio, 1968).

## *2.3 Surface Water Hydrology*

There are no creeks or streams on or adjacent to the Brinker Compressor Station. Surface water drainage is generally towards the east across the facility property towards Leetonia Road. A roadside ditch then directs local runoff towards the north.

## *2.4 Geology and Soils*

The site lies at or near the contact between the Conemaugh Group and the underlying Allegheny Formation. Both of these units are Pennsylvanian age sedimentary rocks composed of shale, sandstone, limestone, and coal. The average regional thickness of the Allegheny Formation is about 212 feet. (Figure 2-1, Site Geology Map).

In the northern part of Columbiana County, the uplands are covered by thick glacial till of Wisconsin Age. The till is an unstratified deposit of medium textured loam that was transported by glaciers. The Columbiana County Soil Survey classifies soil in the area of the site as the Canfield-Wooster Association. The Canfield Silt Loam is described as having 2 to 5 percent sloping capacity and the Wooster Silt Loam is described as having 5 to 10 percent sloping capacity. Both soils are described as dark grayish-brown to yellowish-brown, moderately well to well drained soils that, developed from slightly limy glacial till (Soil Survey of Columbiana County, Ohio, 1968). The drilling log for the site's water well indicates that the combined thickness of soil and glacial deposits is approximately 50 feet on the site property.

| OFFICE | DRAWN BY | CHECKED BY | APPROVED BY | DRAWING NUMBER |
|---|---|---|---|---|
| PGH | R. Weible 12 MAY 00 | | | 805913-B6 |

## LEGEND:

PALEOZOIC SYSTEMS

PERMAIN

Pd — Dunkard

Shales, sandstones and coal.

PENNSYLVANIANIAN

Pm — Monongahela

Coal, shales and sandstones.

Pc — Conemaugh

Shales, sandstones, coal and limestone.

Pp&a — Pottsville and Allegheny

Coal, sandstone, shales and limestone.

MISSISSIPPIAN

Mw&m — Waverly and Maxville

Shales, sandstones and limestone.

APPROXIMATE SCALE

0 8 16 MILES

REFERENCE:

GEOLOGIC MAP OF OHIO, PROVIDED BY THE DEPARTMENT OF NATURAL RESOURCES, A DIVISION OF GEOLOGICAL SURVEY, A REPRINT OF 1981, SCALE: 1:500,000.

IT CORPORATION

COLUMBIA GAS TRANSMISSION CORPORATION

FIGURE 2-1

GEOLOGIC SITE MAP

BRINKER COMPRESSOR STATION
COLUMBIANA COUNTY, OHIO

O:\Project\Columbia Gas\Brinker\805913b6.dwg
Plot Date/Time: 03/19/01 10:24am Image:
Format Revised: 12/15/99 Xref: .

# Table 4-3
# Summary of Analytical Results

| | | | | | | | | |
|---|---|---|---|---|---|---|---|---|
| | | PRA | 0 | | | | | |
| | | PRA Description | BACKGROUND | | | | | |
| | | Sample Type | Normal Sample | | | | | |
| | | Sample Id | BRK-FSB001-70001 | | BRK-FSB001-70002 | | BRK-FSB002-70001 | |
| | | Depth - ft bgs | 0 - 1 | | 2 - 3 | | 0 - 1 | |
| | | Collected Date | 06/13/00 | | 06/13/00 | | 06/13/00 | |
| | | Laboratory | Lancaster Laboratories | | Lancaster Laboratories | | Lancaster Laboratories | |
| | | Sample Collector | IT Corporation (Fluor Daniel/GTI | | IT Corporation (Fluor Daniel/GTI | | IT Corporation (Fluor Daniel/GTI | |
| | | Result Units | MG/KG | | MG/KG | | MG/KG | |
| Category | Analyte | Action Level | Result Flag | > CAL* | Result Flag | > CAL* | Result Flag | > CAL* |
| VOA | BENZENE | 12 | ND | | ND | | ND | |
| | TOLUENE | 16000 | ND | | ND | | ND | |
| | ETHYLBENZENE | 7800 | ND | | ND | | ND | |
| | XYLENE (TOTAL) | 160000 | ND | | ND | | ND | |
| | METHYLENE CHLORIDE | 85 | ND | | ND | | ND | |
| | ACETONE | 7800 | ND | | ND | | ND | |
| BNA | NAPHTHALENE | 1600 | ND | | ND | | ND | |
| | ACENAPHTHENE | 4700 | ND | | ND | | ND | |
| | FLUORENE | 3100 | ND | | ND | | ND | |
| | PHENANTHRENE | 23000 | ND | | ND | | ND | |
| | ANTHRACENE | 23000 | ND | | ND | | ND | |
| | FLUORANTHENE | 3100 | ND | | ND | | ND | |
| | PYRENE | 2300 | ND | | ND | | ND | |
| | BENZO(A)ANTHRACENE | .87 | ND | | ND | | ND | |
| | BENZO(B)FLUORANTHENE | .87 | ND | | ND | | ND | |
| | CHRYSENE | 87 | ND | | ND | | ND | |
| | BENZO(K)FLUORANTHENE | 8.7 | ND | | ND | | ND | |

Notes:

* "> CAL" equals "X" when reported value is above characterization action level for this locale.
J flag - Numerical value is an estimated quantity.
ND indicates Non-Detect
Blank cells in result column indicate an analysis was not performed for that analyte.

Date generated: November 20, 2000

# Table 4-3
## Summary of Analytical Results

| | | | | | | | | |
|---|---|---|---|---|---|---|---|---|
| | | PRA | 0 | | | | | |
| | | PRA Description | BACKGROUND | | | | | |
| | | Sample Type | Normal Sample | | | | | |
| | | Sample Id | BRK-FSB001-70001 | | BRK-FSB001-70002 | | BRK-FSB002-70001 | |
| | | Depth - ft bgs | 0 - 1 | | 2 - 3 | | 0 - 1 | |
| | | Collected Date | 06/13/00 | | 06/13/00 | | 06/13/00 | |
| | | Laboratory | Lancaster Laboratories | | Lancaster Laboratories | | Lancaster Laboratories | |
| | | Sample Collector | IT Corporation (Fluor Daniel/GTI | | IT Corporation (Fluor Daniel/GTI | | IT Corporation (Fluor Daniel/GTI | |
| | | Result Units | MG/KG | | MG/KG | | MG/KG | |
| Category | Analyte | Action Level | Result Flag | > CAL* | Result Flag | > CAL* | Result Flag | > CAL* |
| | BENZO(A)PYRENE | .087 | ND | | ND | | ND | |
| | DIBENZO(A,H)ANTHRACENE | .087 | ND | | ND | | ND | |
| | BENZO(G,H,I)PERYLENE | 2300 | ND | | ND | | ND | |
| | INDENO(1,2,3-CD)PYRENE | .87 | ND | | ND | | ND | |
| P/PCB | AROCLOR-1254 | 1 | ND | | ND | | ND | |
| METAL | BARIUM, TOTAL | 5500 | 87.2 | | 34.5 | | 112 | |
| | BERYLLIUM, TOTAL | 160 | ND | | ND | | ND | |
| | CADMIUM, TOTAL | 39 | ND | | ND | | ND | |
| | CHROMIUM, TOTAL | 230 | 17.6 | | 12.5 | | 15.4 | |
| | LEAD, TOTAL | 400 | ND | | ND | | ND | |
| | NICKEL, TOTAL | 1600 | 16.2 | | 15.8 | | 14.1 | |
| | MERCURY, TOTAL | 20 | ND | | ND | | ND | |
| | ARSENIC, TOTAL | .43 | 11.2 | X | 15.3 | X | 9.3 | X |

Notes:

* "> CAL" equals "X" when reported value is above characterization action level for this locale.
J flag - Numerical value is an estimated quantity.
ND indicates Non-Detect
Blank cells in result column indicate an analysis was not performed for that analyte.

Date generated: November 20, 2000

# Table 4-3
# Summary of Analytical Results

| | | | | | | | | |
|---|---|---|---|---|---|---|---|---|
| | | PRA | | | | | | |
| | | PRA Description | | | | | | |
| | | Sample Type | | | | | | |
| | | Sample Id | **BRK-FSB002-70002** | | **BRK-FSB003-70001** | | **BRK-FSB003-70002** | |
| | | Depth - ft bgs | **2 - 3** | | **0 - 1** | | **2 - 3** | |
| | | Collected Date | **06/13/00** | | **06/13/00** | | **06/13/00** | |
| | | Laboratory | **Lancaster Laboratories** | | **Lancaster Laboratories** | | **Lancaster Laboratories** | |
| | | Sample Collector | **IT Corporation (Fluor Daniel/GTI** | | **IT Corporation (Fluor Daniel/GTI** | | **IT Corporation (Fluor Daniel/GTI** | |
| | | Result Units | **MG/KG** | | **MG/KG** | | **MG/KG** | |
| Category | Analyte | Action Level | **Result Flag** | **> CAL*** | **Result Flag** | **> CAL*** | **Result Flag** | **> CAL*** |
| **VOA** | **BENZENE** | 12 | ND | | ND | | ND | |
| | **TOLUENE** | 16000 | ND | | ND | | ND | |
| | **ETHYLBENZENE** | 7800 | ND | | ND | | ND | |
| | **XYLENE (TOTAL)** | 160000 | ND | | ND | | ND | |
| | **METHYLENE CHLORIDE** | 85 | ND | | ND | | ND | |
| | **ACETONE** | 7800 | ND | | ND | | ND | |
| **BNA** | **NAPHTHALENE** | 1600 | ND | | ND | | ND | |
| | **ACENAPHTHENE** | 4700 | ND | | ND | | ND | |
| | **FLUORENE** | 3100 | ND | | ND | | ND | |
| | **PHENANTHRENE** | 23000 | ND | | ND | | ND | |
| | **ANTHRACENE** | 23000 | ND | | ND | | ND | |
| | **FLUORANTHENE** | 3100 | ND | | ND | | ND | |
| | **PYRENE** | 2300 | ND | | ND | | ND | |
| | **BENZO(A)ANTHRACENE** | .87 | ND | | ND | | ND | |
| | **BENZO(B)FLUORANTHENE** | .87 | ND | | ND | | ND | |
| | **CHRYSENE** | 87 | ND | | ND | | ND | |
| | **BENZO(K)FLUORANTHENE** | 8.7 | ND | | ND | | ND | |

Notes:

* "> CAL" equals "X" when reported value is above characterization action level for this locale.
J flag - Numerical value is an estimated quantity.
ND indicates Non-Detect
Blank cells in result column indicate an analysis was not performed for that analyte.

Date generated: November 20, 2000

# Table 4-3
# Summary of Analytical Results

| | | | | | | | | |
|---|---|---|---|---|---|---|---|---|
| | | PRA | | | | | | |
| | | PRA Description | | | | | | |
| | | Sample Type | | | | | | |
| | | Sample Id | **BRK-FSB002-70002** | | **BRK-FSB003-70001** | | **BRK-FSB003-70002** | |
| | | Depth - ft bgs | **2 - 3** | | **0 - 1** | | **2 - 3** | |
| | | Collected Date | **06/13/00** | | **06/13/00** | | **06/13/00** | |
| | | Laboratory | **Lancaster Laboratories** | | **Lancaster Laboratories** | | **Lancaster Laboratories** | |
| | | Sample Collector | **IT Corporation (Fluor Daniel/GTI** | | **IT Corporation (Fluor Daniel/GTI** | | **IT Corporation (Fluor Daniel/GTI** | |
| | | Result Units | **MG/KG** | | **MG/KG** | | **MG/KG** | |
| Category | Analyte | Action Level | **Result Flag** | **> CAL*** | **Result Flag** | **> CAL*** | **Result Flag** | **> CAL*** |
| | **BENZO(A)PYRENE** | .087 | ND | | ND | | ND | |
| | **DIBENZO(A,H)ANTHRACENE** | .087 | ND | | ND | | ND | |
| | **BENZO(G,H,I)PERYLENE** | 2300 | ND | | ND | | ND | |
| | **INDENO(1,2,3-CD)PYRENE** | .87 | ND | | ND | | ND | |
| **P/PCB** | **AROCLOR-1254** | 1 | ND | | ND | | ND | |
| **METAL** | **BARIUM, TOTAL** | 5500 | 46.5 | | 88.0 | | 67.4 | |
| | **BERYLLIUM, TOTAL** | 160 | ND | | ND | | ND | |
| | **CADMIUM, TOTAL** | 39 | ND | | ND | | ND | |
| | **CHROMIUM, TOTAL** | 230 | 11.4 | | 18.0 | | 13.1 | |
| | **LEAD, TOTAL** | 400 | ND | | ND | | ND | |
| | **NICKEL, TOTAL** | 1600 | 18.1 | | 15.1 | | 23.1 | |
| | **MERCURY, TOTAL** | 20 | ND | | ND | | ND | |
| | **ARSENIC, TOTAL** | .43 | 13.6 | X | 11.8 | X | 11.6 | X |

Notes:

* "> CAL" equals "X" when reported value is above characterization action level for this locale.
J flag - Numerical value is an estimated quantity.
ND indicates Non-Detect
Blank cells in result column indicate an analysis was not performed for that analyte.

Date generated: November 20, 2000

# Table 4-3
# Summary of Analytical Results

| | | | | | | | | |
|---|---|---|---|---|---|---|---|---|
| | | PRA | | | | | | |
| | | PRA Description | | | | | | |
| | | Sample Type | | | | | | |
| | | Sample Id | **BRK-FSB004-70001** | | **BRK-FSB004-70002** | | **BRK-FSB005-70001** | |
| | | Depth - ft bgs | **0 - 1** | | **2 - 3** | | **0 - 1** | |
| | | Collected Date | **06/13/00** | | **06/13/00** | | **06/13/00** | |
| | | Laboratory | **Lancaster Laboratories** | | **Lancaster Laboratories** | | **Lancaster Laboratories** | |
| | | Sample Collector | **IT Corporation (Fluor Daniel/GTI** | | **IT Corporation (Fluor Daniel/GTI** | | **IT Corporation (Fluor Daniel/GTI** | |
| | | Result Units | **MG/KG** | | **MG/KG** | | **MG/KG** | |
| Category | Analyte | Action Level | **Result Flag** | **> CAL*** | **Result Flag** | **> CAL*** | **Result Flag** | **> CAL*** |
| **VOA** | **BENZENE** | 12 | ND | | ND | | ND | |
| | **TOLUENE** | 16000 | ND | | ND | | ND | |
| | **ETHYLBENZENE** | 7800 | ND | | ND | | ND | |
| | **XYLENE (TOTAL)** | 160000 | ND | | ND | | ND | |
| | **METHYLENE CHLORIDE** | 85 | ND | | ND | | ND | |
| | **ACETONE** | 7800 | ND | | ND | | ND | |
| **BNA** | **NAPHTHALENE** | 1600 | ND | | ND | | ND | |
| | **ACENAPHTHENE** | 4700 | ND | | ND | | ND | |
| | **FLUORENE** | 3100 | ND | | ND | | ND | |
| | **PHENANTHRENE** | 23000 | ND | | ND | | ND | |
| | **ANTHRACENE** | 23000 | ND | | ND | | ND | |
| | **FLUORANTHENE** | 3100 | ND | | ND | | ND | |
| | **PYRENE** | 2300 | ND | | ND | | ND | |
| | **BENZO(A)ANTHRACENE** | .87 | ND | | ND | | ND | |
| | **BENZO(B)FLUORANTHENE** | .87 | ND | | ND | | ND | |
| | **CHRYSENE** | 87 | ND | | ND | | ND | |
| | **BENZO(K)FLUORANTHENE** | 8.7 | ND | | ND | | ND | |

Notes:

* "> CAL" equals "X" when reported value is above characterization action level for this locale.
J flag - Numerical value is an estimated quantity.
ND indicates Non-Detect
Blank cells in result column indicate an analysis was not performed for that analyte.

Date generated: November 20, 2000

# Table 4-3
# Summary of Analytical Results

| | | | | | | | | |
|---|---|---|---|---|---|---|---|---|
| | | PRA | | | | | | |
| | | PRA Description | | | | | | |
| | | Sample Type | | | | | | |
| | | Sample Id | **BRK-FSB004-70001** | | **BRK-FSB004-70002** | | **BRK-FSB005-70001** | |
| | | Depth - ft bgs | **0 - 1** | | **2 - 3** | | **0 - 1** | |
| | | Collected Date | **06/13/00** | | **06/13/00** | | **06/13/00** | |
| | | Laboratory | **Lancaster Laboratories** | | **Lancaster Laboratories** | | **Lancaster Laboratories** | |
| | | Sample Collector | **IT Corporation (Fluor Daniel/GTI** | | **IT Corporation (Fluor Daniel/GTI** | | **IT Corporation (Fluor Daniel/GTI** | |
| | | Result Units | **MG/KG** | | **MG/KG** | | **MG/KG** | |
| Category | Analyte | Action Level | **Result Flag** | **> CAL*** | **Result Flag** | **> CAL*** | **Result Flag** | **> CAL*** |
| | **BENZO(A)PYRENE** | .087 | ND | | ND | | ND | |
| | **DIBENZO(A,H)ANTHRACENE** | .087 | ND | | ND | | ND | |
| | **BENZO(G,H,I)PERYLENE** | 2300 | ND | | ND | | ND | |
| | **INDENO(1,2,3-CD)PYRENE** | .87 | ND | | ND | | ND | |
| **P/PCB** | **AROCLOR-1254** | 1 | ND | | ND | | ND | |
| **METAL** | **BARIUM, TOTAL** | 5500 | 112 | | 34.8 | | 214 | |
| | **BERYLLIUM, TOTAL** | 160 | ND | | ND | | 1.7 | |
| | **CADMIUM, TOTAL** | 39 | ND | | ND | | ND | |
| | **CHROMIUM, TOTAL** | 230 | 22.0 | | 12.5 | | 20.4 | |
| | **LEAD, TOTAL** | 400 | 27.7 | | ND | | 32.7 | |
| | **NICKEL, TOTAL** | 1600 | 20.8 | | 17.5 | | 17.2 | |
| | **MERCURY, TOTAL** | 20 | ND | | ND | | ND | |
| | **ARSENIC, TOTAL** | .43 | 15.8 | X | 12.5 | X | 20.6 | X |

Notes:

* "> CAL" equals "X" when reported value is above characterization action level for this locale.
J flag - Numerical value is an estimated quantity.
ND indicates Non-Detect
Blank cells in result column indicate an analysis was not performed for that analyte.

Date generated: November 20, 2000

# Table 4-3
# Summary of Analytical Results

| | | | | | | | | |
|---|---|---|---|---|---|---|---|---|
| | | PRA | | | | | | |
| | | PRA Description | | | | | | |
| | | Sample Type | | | | | | |
| | | Sample Id | **BRK-FSB005-70002** | | **BRK-FSS001-40001** | | **BRK-FSS002-40001** | |
| | | Depth - ft bgs | **2 - 3** | | **0 - 1** | | **0 - 1** | |
| | | Collected Date | **06/13/00** | | **06/12/00** | | **06/12/00** | |
| | | Laboratory | **Lancaster Laboratories** | | **Lancaster Laboratories** | | **Lancaster Laboratories** | |
| | | Sample Collector | **IT Corporation (Fluor Daniel/GTI** | | **IT Corporation (Fluor Daniel/GTI** | | **IT Corporation (Fluor Daniel/GTI** | |
| | | Result Units | **MG/KG** | | **MG/KG** | | **MG/KG** | |
| Category | Analyte | Action Level | **Result Flag** | **> CAL*** | **Result Flag** | **> CAL*** | **Result Flag** | **> CAL*** |
| **VOA** | **BENZENE** | 12 | ND | | ND | | ND | |
| | **TOLUENE** | 16000 | ND | | ND | | ND | |
| | **ETHYLBENZENE** | 7800 | ND | | ND | | ND | |
| | **XYLENE (TOTAL)** | 160000 | ND | | ND | | ND | |
| | **METHYLENE CHLORIDE** | 85 | ND | | ND | | ND | |
| | **ACETONE** | 7800 | ND | | ND | | ND | |
| **BNA** | **NAPHTHALENE** | 1600 | ND | | ND | | ND | |
| | **ACENAPHTHENE** | 4700 | ND | | ND | | ND | |
| | **FLUORENE** | 3100 | ND | | ND | | ND | |
| | **PHENANTHRENE** | 23000 | ND | | ND | | ND | |
| | **ANTHRACENE** | 23000 | ND | | ND | | ND | |
| | **FLUORANTHENE** | 3100 | ND | | ND | | ND | |
| | **PYRENE** | 2300 | ND | | 0.55 | | ND | |
| | **BENZO(A)ANTHRACENE** | .87 | ND | | ND | | ND | |
| | **BENZO(B)FLUORANTHENE** | .87 | ND | | ND | | ND | |
| | **CHRYSENE** | 87 | ND | | ND | | ND | |
| | **BENZO(K)FLUORANTHENE** | 8.7 | ND | | ND | | ND | |

Notes:

* "> CAL" equals "X" when reported value is above characterization action level for this locale.
J flag - Numerical value is an estimated quantity.
ND indicates Non-Detect
Blank cells in result column indicate an analysis was not performed for that analyte.

Date generated: November 20, 2000

# Table 4-3
# Summary of Analytical Results

| | | | | | | | | |
|---|---|---|---|---|---|---|---|---|
| | | PRA | | | | | | |
| | | PRA Description | | | | | | |
| | | Sample Type | | | | | | |
| | | Sample Id | **BRK-FSB005-70002** | | **BRK-FSS001-40001** | | **BRK-FSS002-40001** | |
| | | Depth - ft bgs | **2 - 3** | | **0 - 1** | | **0 - 1** | |
| | | Collected Date | **06/13/00** | | **06/12/00** | | **06/12/00** | |
| | | Laboratory | **Lancaster Laboratories** | | **Lancaster Laboratories** | | **Lancaster Laboratories** | |
| | | Sample Collector | **IT Corporation (Fluor Daniel/GTI** | | **IT Corporation (Fluor Daniel/GTI** | | **IT Corporation (Fluor Daniel/GTI** | |
| | | Result Units | **MG/KG** | | **MG/KG** | | **MG/KG** | |
| Category | Analyte | Action Level | **Result Flag** | **> CAL*** | **Result Flag** | **> CAL*** | **Result Flag** | **> CAL*** |
| | **BENZO(A)PYRENE** | .087 | ND | | ND | | ND | |
| | **DIBENZO(A,H)ANTHRACENE** | .087 | ND | | ND | | ND | |
| | **BENZO(G,H,I)PERYLENE** | 2300 | ND | | ND | | ND | |
| | **INDENO(1,2,3-CD)PYRENE** | .87 | ND | | ND | | ND | |
| **P/PCB** | **AROCLOR-1254** | 1 | ND | | ND | | ND | |
| **METAL** | **BARIUM, TOTAL** | 5500 | 48.4 | | 82.8 | | 124 | |
| | **BERYLLIUM, TOTAL** | 160 | ND | | ND | | ND | |
| | **CADMIUM, TOTAL** | 39 | ND | | ND | | ND | |
| | **CHROMIUM, TOTAL** | 230 | 14.4 | | 14.2 | | 14.1 | |
| | **LEAD, TOTAL** | 400 | ND | | 28.8 | | ND | |
| | **NICKEL, TOTAL** | 1600 | 19.0 | | ND | | 13.8 | |
| | **MERCURY, TOTAL** | 20 | ND | | ND | | ND | |
| | **ARSENIC, TOTAL** | .43 | 29.9 | X | 10.4 | X | 8.7 | X |

Notes:

* "> CAL" equals "X" when reported value is above characterization action level for this locale.
J flag - Numerical value is an estimated quantity.
ND indicates Non-Detect
Blank cells in result column indicate an analysis was not performed for that analyte.

Date generated: November 20, 2000

# Table 4-3
# Summary of Analytical Results

| | | | | | | | | |
|---|---|---|---|---|---|---|---|---|
| | | PRA | | | | | | |
| | | PRA Description | | | | | | |
| | | Sample Type | | | | | | |
| | | Sample Id | **BRK-FSS003-40001** | | **BRK-FSS004-40001** | | **BRK-FSS005-40001** | |
| | | Depth - ft bgs | **0 - 1** | | **0 - 1** | | **0 - 1** | |
| | | Collected Date | **06/12/00** | | **06/12/00** | | **06/12/00** | |
| | | Laboratory | **Lancaster Laboratories** | | **Lancaster Laboratories** | | **Lancaster Laboratories** | |
| | | Sample Collector | **IT Corporation (Fluor Daniel/GTI** | | **IT Corporation (Fluor Daniel/GTI** | | **IT Corporation (Fluor Daniel/GTI** | |
| | | Result Units | **MG/KG** | | **MG/KG** | | **MG/KG** | |
| Category | Analyte | Action Level | **Result Flag** | **> CAL*** | **Result Flag** | **> CAL*** | **Result Flag** | **> CAL*** |
| **VOA** | **BENZENE** | 12 | ND | | ND | | ND | |
| | **TOLUENE** | 16000 | ND | | ND | | ND | |
| | **ETHYLBENZENE** | 7800 | ND | | ND | | ND | |
| | **XYLENE (TOTAL)** | 160000 | ND | | ND | | ND | |
| | **METHYLENE CHLORIDE** | 85 | ND | | ND | | ND | |
| | **ACETONE** | 7800 | ND | | ND | | ND | |
| **BNA** | **NAPHTHALENE** | 1600 | ND | | ND | | ND | |
| | **ACENAPHTHENE** | 4700 | ND | | ND | | ND | |
| | **FLUORENE** | 3100 | ND | | ND | | ND | |
| | **PHENANTHRENE** | 23000 | ND | | ND | | ND | |
| | **ANTHRACENE** | 23000 | ND | | ND | | ND | |
| | **FLUORANTHENE** | 3100 | ND | | ND | | ND | |
| | **PYRENE** | 2300 | ND | | ND | | ND | |
| | **BENZO(A)ANTHRACENE** | .87 | ND | | ND | | ND | |
| | **BENZO(B)FLUORANTHENE** | .87 | ND | | ND | | ND | |
| | **CHRYSENE** | 87 | ND | | ND | | ND | |
| | **BENZO(K)FLUORANTHENE** | 8.7 | ND | | ND | | ND | |

Notes:

* "> CAL" equals "X" when reported value is above characterization action level for this locale.
J flag - Numerical value is an estimated quantity.
ND indicates Non-Detect
Blank cells in result column indicate an analysis was not performed for that analyte.

Date generated: November 20, 2000

# Table 4-3
# Summary of Analytical Results

| | | | | | | | | |
|---|---|---|---|---|---|---|---|---|
| | | PRA | | | | | | |
| | | PRA Description | | | | | | |
| | | Sample Type | | | | | | |
| | | Sample Id | **BRK-FSS003-40001** | | **BRK-FSS004-40001** | | **BRK-FSS005-40001** | |
| | | Depth - ft bgs | **0 - 1** | | **0 - 1** | | **0 - 1** | |
| | | Collected Date | **06/12/00** | | **06/12/00** | | **06/12/00** | |
| | | Laboratory | **Lancaster Laboratories** | | **Lancaster Laboratories** | | **Lancaster Laboratories** | |
| | | Sample Collector | **IT Corporation (Fluor Daniel/GTI** | | **IT Corporation (Fluor Daniel/GTI** | | **IT Corporation (Fluor Daniel/GTI** | |
| | | Result Units | **MG/KG** | | **MG/KG** | | **MG/KG** | |
| Category | Analyte | Action Level | **Result Flag** | **> CAL*** | **Result Flag** | **> CAL*** | **Result Flag** | **> CAL*** |
| | **BENZO(A)PYRENE** | .087 | ND | | ND | | ND | |
| | **DIBENZO(A,H)ANTHRACENE** | .087 | ND | | ND | | ND | |
| | **BENZO(G,H,I)PERYLENE** | 2300 | ND | | ND | | ND | |
| | **INDENO(1,2,3-CD)PYRENE** | .87 | ND | | ND | | ND | |
| **P/PCB** | **AROCLOR-1254** | 1 | ND | | ND | | ND | |
| **METAL** | **BARIUM, TOTAL** | 5500 | 87.2 | | 90.1 | | 69.7 | |
| | **BERYLLIUM, TOTAL** | 160 | ND | | 1.4 | | ND | |
| | **CADMIUM, TOTAL** | 39 | ND | | ND | | ND | |
| | **CHROMIUM, TOTAL** | 230 | 18.2 | | 18.5 | | 13.6 | |
| | **LEAD, TOTAL** | 400 | ND | | ND | | ND | |
| | **NICKEL, TOTAL** | 1600 | 15.2 | | 15.9 | | ND | |
| | **MERCURY, TOTAL** | 20 | ND | | ND | | ND | |
| | **ARSENIC, TOTAL** | .43 | 12.2 | X | 14.5 | X | 8.9 | X |

Notes:

* "> CAL" equals "X" when reported value is above characterization action level for this locale.
J flag - Numerical value is an estimated quantity.
ND indicates Non-Detect
Blank cells in result column indicate an analysis was not performed for that analyte.

Date generated: November 20, 2000

# Table 4-3
# Summary of Analytical Results

| | | | | | | | | |
|---|---|---|---|---|---|---|---|---|
| | | PRA | | | | | | |
| | | PRA Description | **RANDOM PCBs** | | | | | |
| | | Sample Type | **Normal Sample** | | | | | |
| | | Sample Id | **BRK-FSS006-40001** | | **BRK-FSS007-40001** | | **BRK-FSS008-40001** | |
| | | Depth - ft bgs | **0 - 0.5** | | **0 - 0.5** | | **0 - 0.5** | |
| | | Collected Date | **06/12/00** | | **06/12/00** | | **06/12/00** | |
| | | Laboratory | **Lancaster Laboratories** | | **Lancaster Laboratories** | | **Lancaster Laboratories** | |
| | | Sample Collector | **IT Corporation (Fluor Daniel/GTI** | | **IT Corporation (Fluor Daniel/GTI** | | **IT Corporation (Fluor Daniel/GTI** | |
| | | Result Units | **MG/KG** | | **MG/KG** | | **MG/KG** | |
| Category | Analyte | Action Level | **Result Flag** | **> CAL*** | **Result Flag** | **> CAL*** | **Result Flag** | **> CAL*** |
| **VOA** | **BENZENE** | 12 | | | | | | |
| | **TOLUENE** | 16000 | | | | | | |
| | **ETHYLBENZENE** | 7800 | | | | | | |
| | **XYLENE (TOTAL)** | 160000 | | | | | | |
| | **METHYLENE CHLORIDE** | 85 | | | | | | |
| | **ACETONE** | 7800 | | | | | | |
| **BNA** | **NAPHTHALENE** | 1600 | | | | | | |
| | **ACENAPHTHENE** | 4700 | | | | | | |
| | **FLUORENE** | 3100 | | | | | | |
| | **PHENANTHRENE** | 23000 | | | | | | |
| | **ANTHRACENE** | 23000 | | | | | | |
| | **FLUORANTHENE** | 3100 | | | | | | |
| | **PYRENE** | 2300 | | | | | | |
| | **BENZO(A)ANTHRACENE** | .87 | | | | | | |
| | **BENZO(B)FLUORANTHENE** | .87 | | | | | | |
| | **CHRYSENE** | 87 | | | | | | |
| | **BENZO(K)FLUORANTHENE** | 8.7 | | | | | | |

Notes:

* "> CAL" equals "X" when reported value is above characterization action level for this locale.
J flag - Numerical value is an estimated quantity.
ND indicates Non-Detect
Blank cells in result column indicate an analysis was not performed for that analyte.

Date generated: November 20, 2000

# Table 4-3
# Summary of Analytical Results

| | | | | | | | | |
|---|---|---|---|---|---|---|---|---|
| | | PRA | | | | | | |
| | | PRA Description | **RANDOM PCBs** | | | | | |
| | | Sample Type | **Normal Sample** | | | | | |
| | | Sample Id | **BRK-FSS006-40001** | | **BRK-FSS007-40001** | | **BRK-FSS008-40001** | |
| | | Depth - ft bgs | **0 - 0.5** | | **0 - 0.5** | | **0 - 0.5** | |
| | | Collected Date | **06/12/00** | | **06/12/00** | | **06/12/00** | |
| | | Laboratory | **Lancaster Laboratories** | | **Lancaster Laboratories** | | **Lancaster Laboratories** | |
| | | Sample Collector | **IT Corporation (Fluor Daniel/GTI** | | **IT Corporation (Fluor Daniel/GTI** | | **IT Corporation (Fluor Daniel/GTI** | |
| | | Result Units | **MG/KG** | | **MG/KG** | | **MG/KG** | |
| Category | Analyte | Action Level | **Result Flag** | **> CAL*** | **Result Flag** | **> CAL*** | **Result Flag** | **> CAL*** |
| | **BENZO(A)PYRENE** | .087 | | | | | | |
| | **DIBENZO(A,H)ANTHRACENE** | .087 | | | | | | |
| | **BENZO(G,H,I)PERYLENE** | 2300 | | | | | | |
| | **INDENO(1,2,3-CD)PYRENE** | .87 | | | | | | |
| **P/PCB** | **AROCLOR-1254** | 1 | ND | | ND | | ND | |
| **METAL** | **BARIUM, TOTAL** | 5500 | | | | | | |
| | **BERYLLIUM, TOTAL** | 160 | | | | | | |
| | **CADMIUM, TOTAL** | 39 | | | | | | |
| | **CHROMIUM, TOTAL** | 230 | | | | | | |
| | **LEAD, TOTAL** | 400 | | | | | | |
| | **NICKEL, TOTAL** | 1600 | | | | | | |
| | **MERCURY, TOTAL** | 20 | | | | | | |
| | **ARSENIC, TOTAL** | .43 | | | | | | |

Notes:

* "> CAL" equals "X" when reported value is above characterization action level for this locale.
J flag - Numerical value is an estimated quantity.
ND indicates Non-Detect
Blank cells in result column indicate an analysis was not performed for that analyte.

Date generated: November 20, 2000

# Table 4-3
# Summary of Analytical Results

| | | | | | | | | |
|---|---|---|---|---|---|---|---|---|
| | | PRA | | | 1 | | | |
| | | PRA Description | | | DIKED AT CONTAINMENT AREA | | | |
| | | Sample Type | | | Field Duplicate (Rep) | | Normal Sample | |
| | | Sample Id | BRK-FSS009-40001 | | BRK-FSB011-71003 | | BRK-FSB006-70001 | |
| | | Depth - ft bgs | 0 - 0.5 | | 3.5 - 4 | | 0 - 1 | |
| | | Collected Date | 06/12/00 | | 06/14/00 | | 06/13/00 | |
| | | Laboratory | Lancaster Laboratories | | Lancaster Laboratories | | Lancaster Laboratories | |
| | | Sample Collector | IT Corporation (Fluor Daniel/GTI | | IT Corporation (Fluor Daniel/GTI | | IT Corporation (Fluor Daniel/GTI | |
| | | Result Units | MG/KG | | MG/KG | | MG/KG | |
| Category | Analyte | Action Level | Result Flag | > CAL* | Result Flag | > CAL* | Result Flag | > CAL* |
| VOA | BENZENE | 12 | | | ND | | ND | |
| | TOLUENE | 16000 | | | ND | | ND | |
| | ETHYLBENZENE | 7800 | | | ND | | ND | |
| | XYLENE (TOTAL) | 160000 | | | ND | | ND | |
| | METHYLENE CHLORIDE | 85 | | | | | | |
| | ACETONE | 7800 | | | | | | |
| BNA | NAPHTHALENE | 1600 | | | ND | | ND | |
| | ACENAPHTHENE | 4700 | | | ND | | ND | |
| | FLUORENE | 3100 | | | ND | | ND | |
| | PHENANTHRENE | 23000 | | | ND | | ND | |
| | ANTHRACENE | 23000 | | | ND | | ND | |
| | FLUORANTHENE | 3100 | | | ND | | ND | |
| | PYRENE | 2300 | | | ND | | ND | |
| | BENZO(A)ANTHRACENE | .87 | | | ND | | ND | |
| | BENZO(B)FLUORANTHENE | .87 | | | ND | | ND | |
| | CHRYSENE | 87 | | | ND | | ND | |
| | BENZO(K)FLUORANTHENE | 8.7 | | | ND | | ND | |

Notes:

* "> CAL" equals "X" when reported value is above characterization action level for this locale.
J flag - Numerical value is an estimated quantity.
ND indicates Non-Detect
Blank cells in result column indicate an analysis was not performed for that analyte.

Date generated: November 20, 2000

# Table 4-3
# Summary of Analytical Results

| | | | | | | | | |
|---|---|---|---|---|---|---|---|---|
| | | PRA | | | 1 | | | |
| | | PRA Description | | | DIKED AT CONTAINMENT AREA | | | |
| | | Sample Type | | | Field Duplicate (Rep) | | Normal Sample | |
| | | Sample Id | BRK-FSS009-40001 | | BRK-FSB011-71003 | | BRK-FSB006-70001 | |
| | | Depth - ft bgs | 0 - 0.5 | | 3.5 - 4 | | 0 - 1 | |
| | | Collected Date | 06/12/00 | | 06/14/00 | | 06/13/00 | |
| | | Laboratory | Lancaster Laboratories | | Lancaster Laboratories | | Lancaster Laboratories | |
| | | Sample Collector | IT Corporation (Fluor Daniel/GTI | | IT Corporation (Fluor Daniel/GTI | | IT Corporation (Fluor Daniel/GTI | |
| | | Result Units | MG/KG | | MG/KG | | MG/KG | |
| Category | Analyte | Action Level | Result Flag | > CAL* | Result Flag | > CAL* | Result Flag | > CAL* |
| | BENZO(A)PYRENE | .087 | | | ND | | ND | |
| | DIBENZO(A,H)ANTHRACENE | .087 | | | ND | | ND | |
| | BENZO(G,H,I)PERYLENE | 2300 | | | ND | | ND | |
| | INDENO(1,2,3-CD)PYRENE | .87 | | | ND | | ND | |
| P/PCB | AROCLOR-1254 | 1 | ND | | | | | |
| METAL | BARIUM, TOTAL | 5500 | | | | | | |
| | BERYLLIUM, TOTAL | 160 | | | | | | |
| | CADMIUM, TOTAL | 39 | | | | | | |
| | CHROMIUM, TOTAL | 230 | | | | | | |
| | LEAD, TOTAL | 400 | | | | | | |
| | NICKEL, TOTAL | 1600 | | | | | | |
| | MERCURY, TOTAL | 20 | | | | | | |
| | ARSENIC, TOTAL | .43 | | | | | | |

Notes:

* "> CAL" equals "X" when reported value is above characterization action level for this locale.
J flag - Numerical value is an estimated quantity.
ND indicates Non-Detect
Blank cells in result column indicate an analysis was not performed for that analyte.

Date generated: November 20, 2000

# Table 4-3
# Summary of Analytical Results

| | | | | | | | | |
|---|---|---|---|---|---|---|---|---|
| | | PRA | | | | | | |
| | | PRA Description | | | | | | |
| | | Sample Type | | | | | | |
| | | Sample Id | **BRK-FSB006-70002** | | **BRK-FSB006-70003** | | **BRK-FSB007-70001** | |
| | | Depth - ft bgs | **2 - 2.5** | | **3.5 - 4** | | **0 - 1** | |
| | | Collected Date | **06/13/00** | | **06/13/00** | | **06/13/00** | |
| | | Laboratory | **Lancaster Laboratories** | | **Lancaster Laboratories** | | **Lancaster Laboratories** | |
| | | Sample Collector | **IT Corporation (Fluor Daniel/GTI** | | **IT Corporation (Fluor Daniel/GTI** | | **IT Corporation (Fluor Daniel/GTI** | |
| | | Result Units | **MG/KG** | | **MG/KG** | | **MG/KG** | |
| Category | Analyte | Action Level | **Result Flag** | **> CAL*** | **Result Flag** | **> CAL*** | **Result Flag** | **> CAL*** |
| **VOA** | **BENZENE** | 12 | ND | | ND | | ND | |
| | **TOLUENE** | 16000 | ND | | ND | | ND | |
| | **ETHYLBENZENE** | 7800 | ND | | ND | | ND | |
| | **XYLENE (TOTAL)** | 160000 | ND | | ND | | ND | |
| | **METHYLENE CHLORIDE** | 85 | | | | | | |
| | **ACETONE** | 7800 | | | | | | |
| **BNA** | **NAPHTHALENE** | 1600 | ND | | ND | | ND | |
| | **ACENAPHTHENE** | 4700 | ND | | ND | | ND | |
| | **FLUORENE** | 3100 | ND | | ND | | ND | |
| | **PHENANTHRENE** | 23000 | ND | | ND | | ND | |
| | **ANTHRACENE** | 23000 | ND | | ND | | ND | |
| | **FLUORANTHENE** | 3100 | ND | | ND | | ND | |
| | **PYRENE** | 2300 | ND | | ND | | ND | |
| | **BENZO(A)ANTHRACENE** | .87 | ND | | ND | | ND | |
| | **BENZO(B)FLUORANTHENE** | .87 | ND | | ND | | ND | |
| | **CHRYSENE** | 87 | ND | | ND | | ND | |
| | **BENZO(K)FLUORANTHENE** | 8.7 | ND | | ND | | ND | |

Notes:

* "> CAL" equals "X" when reported value is above characterization action level for this locale.
J flag - Numerical value is an estimated quantity.
ND indicates Non-Detect
Blank cells in result column indicate an analysis was not performed for that analyte.

Date generated: November 20, 2000

# Table 4-3
# Summary of Analytical Results

| | | | | | | | | |
|---|---|---|---|---|---|---|---|---|
| | | PRA | | | | | | |
| | | PRA Description | | | | | | |
| | | Sample Type | | | | | | |
| | | Sample Id | **BRK-FSB006-70002** | | **BRK-FSB006-70003** | | **BRK-FSB007-70001** | |
| | | Depth - ft bgs | **2 - 2.5** | | **3.5 - 4** | | **0 - 1** | |
| | | Collected Date | **06/13/00** | | **06/13/00** | | **06/13/00** | |
| | | Laboratory | **Lancaster Laboratories** | | **Lancaster Laboratories** | | **Lancaster Laboratories** | |
| | | Sample Collector | **IT Corporation (Fluor Daniel/GTI** | | **IT Corporation (Fluor Daniel/GTI** | | **IT Corporation (Fluor Daniel/GTI** | |
| | | Result Units | **MG/KG** | | **MG/KG** | | **MG/KG** | |
| Category | Analyte | Action Level | **Result Flag** | **> CAL*** | **Result Flag** | **> CAL*** | **Result Flag** | **> CAL*** |
| | **BENZO(A)PYRENE** | .087 | ND | | ND | | ND | |
| | **DIBENZO(A,H)ANTHRACENE** | .087 | ND | | ND | | ND | |
| | **BENZO(G,H,I)PERYLENE** | 2300 | ND | | ND | | ND | |
| | **INDENO(1,2,3-CD)PYRENE** | .87 | ND | | ND | | ND | |
| **P/PCB** | **AROCLOR-1254** | 1 | | | | | | |
| **METAL** | **BARIUM, TOTAL** | 5500 | | | | | | |
| | **BERYLLIUM, TOTAL** | 160 | | | | | | |
| | **CADMIUM, TOTAL** | 39 | | | | | | |
| | **CHROMIUM, TOTAL** | 230 | | | | | | |
| | **LEAD, TOTAL** | 400 | | | | | | |
| | **NICKEL, TOTAL** | 1600 | | | | | | |
| | **MERCURY, TOTAL** | 20 | | | | | | |
| | **ARSENIC, TOTAL** | .43 | | | | | | |

Notes:

* "> CAL" equals "X" when reported value is above characterization action level for this locale.
J flag - Numerical value is an estimated quantity.
ND indicates Non-Detect
Blank cells in result column indicate an analysis was not performed for that analyte.

Date generated: November 20, 2000

# Table 4-3
# Summary of Analytical Results

| | | | | | | | | |
|---|---|---|---|---|---|---|---|---|
| | | PRA | | | | | | |
| | | PRA Description | | | | | | |
| | | Sample Type | | | | | | |
| | | Sample Id | **BRK-FSB007-70002** | | **BRK-FSB007-70003** | | **BRK-FSB008-70001** | |
| | | Depth - ft bgs | **2 - 2.5** | | **3.5 - 4** | | **0 - 1** | |
| | | Collected Date | **06/13/00** | | **06/13/00** | | **06/13/00** | |
| | | Laboratory | **Lancaster Laboratories** | | **Lancaster Laboratories** | | **Lancaster Laboratories** | |
| | | Sample Collector | **IT Corporation (Fluor Daniel/GTI** | | **IT Corporation (Fluor Daniel/GTI** | | **IT Corporation (Fluor Daniel/GTI** | |
| | | Result Units | **MG/KG** | | **MG/KG** | | **MG/KG** | |
| Category | Analyte | Action Level | **Result Flag** | **> CAL*** | **Result Flag** | **> CAL*** | **Result Flag** | **> CAL*** |
| **VOA** | **BENZENE** | 12 | ND | | ND | | ND | |
| | **TOLUENE** | 16000 | ND | | ND | | ND | |
| | **ETHYLBENZENE** | 7800 | ND | | ND | | ND | |
| | **XYLENE (TOTAL)** | 160000 | ND | | ND | | ND | |
| | **METHYLENE CHLORIDE** | 85 | | | | | | |
| | **ACETONE** | 7800 | | | | | | |
| **BNA** | **NAPHTHALENE** | 1600 | ND | | ND | | ND | |
| | **ACENAPHTHENE** | 4700 | ND | | ND | | ND | |
| | **FLUORENE** | 3100 | ND | | ND | | ND | |
| | **PHENANTHRENE** | 23000 | ND | | ND | | ND | |
| | **ANTHRACENE** | 23000 | ND | | ND | | ND | |
| | **FLUORANTHENE** | 3100 | ND | | ND | | ND | |
| | **PYRENE** | 2300 | ND | | ND | | ND | |
| | **BENZO(A)ANTHRACENE** | .87 | ND | | ND | | ND | |
| | **BENZO(B)FLUORANTHENE** | .87 | ND | | ND | | ND | |
| | **CHRYSENE** | 87 | ND | | ND | | ND | |
| | **BENZO(K)FLUORANTHENE** | 8.7 | ND | | ND | | ND | |

Notes:

* "> CAL" equals "X" when reported value is above characterization action level for this locale.
J flag - Numerical value is an estimated quantity.
ND indicates Non-Detect
Blank cells in result column indicate an analysis was not performed for that analyte.

Date generated: November 20, 2000

# Table 4-3
# Summary of Analytical Results

| | | | | | | | | |
|---|---|---|---|---|---|---|---|---|
| | | PRA | | | | | | |
| | | PRA Description | | | | | | |
| | | Sample Type | | | | | | |
| | | Sample Id | **BRK-FSB007-70002** | | **BRK-FSB007-70003** | | **BRK-FSB008-70001** | |
| | | Depth - ft bgs | **2 - 2.5** | | **3.5 - 4** | | **0 - 1** | |
| | | Collected Date | **06/13/00** | | **06/13/00** | | **06/13/00** | |
| | | Laboratory | **Lancaster Laboratories** | | **Lancaster Laboratories** | | **Lancaster Laboratories** | |
| | | Sample Collector | **IT Corporation (Fluor Daniel/GTI** | | **IT Corporation (Fluor Daniel/GTI** | | **IT Corporation (Fluor Daniel/GTI** | |
| | | Result Units | **MG/KG** | | **MG/KG** | | **MG/KG** | |
| Category | Analyte | Action Level | **Result Flag** | **> CAL*** | **Result Flag** | **> CAL*** | **Result Flag** | **> CAL*** |
| | **BENZO(A)PYRENE** | .087 | ND | | ND | | ND | |
| | **DIBENZO(A,H)ANTHRACENE** | .087 | ND | | ND | | ND | |
| | **BENZO(G,H,I)PERYLENE** | 2300 | ND | | ND | | ND | |
| | **INDENO(1,2,3-CD)PYRENE** | .87 | ND | | ND | | ND | |
| **P/PCB** | **AROCLOR-1254** | 1 | | | | | | |
| **METAL** | **BARIUM, TOTAL** | 5500 | | | | | | |
| | **BERYLLIUM, TOTAL** | 160 | | | | | | |
| | **CADMIUM, TOTAL** | 39 | | | | | | |
| | **CHROMIUM, TOTAL** | 230 | | | | | | |
| | **LEAD, TOTAL** | 400 | | | | | | |
| | **NICKEL, TOTAL** | 1600 | | | | | | |
| | **MERCURY, TOTAL** | 20 | | | | | | |
| | **ARSENIC, TOTAL** | .43 | | | | | | |

Notes:

* "> CAL" equals "X" when reported value is above characterization action level for this locale.
J flag - Numerical value is an estimated quantity.
ND indicates Non-Detect
Blank cells in result column indicate an analysis was not performed for that analyte.

Date generated: November 20, 2000

# Table 4-3
# Summary of Analytical Results

| | | | | | | | | |
|---|---|---|---|---|---|---|---|---|
| | | PRA | | | | | | |
| | | PRA Description | | | | | | |
| | | Sample Type | | | | | | |
| | | Sample Id | **BRK-FSB008-70002** | | **BRK-FSB008-70003** | | **BRK-FSB009-70001** | |
| | | Depth - ft bgs | **2 - 2.5** | | **3.5 - 4** | | **0 - 1** | |
| | | Collected Date | **06/13/00** | | **06/13/00** | | **06/14/00** | |
| | | Laboratory | **Lancaster Laboratories** | | **Lancaster Laboratories** | | **Lancaster Laboratories** | |
| | | Sample Collector | **IT Corporation (Fluor Daniel/GTI** | | **IT Corporation (Fluor Daniel/GTI** | | **IT Corporation (Fluor Daniel/GTI** | |
| | | Result Units | **MG/KG** | | **MG/KG** | | **MG/KG** | |
| Category | Analyte | Action Level | **Result Flag** | **> CAL*** | **Result Flag** | **> CAL*** | **Result Flag** | **> CAL*** |
| **VOA** | **BENZENE** | 12 | ND | | ND | | ND | |
| | **TOLUENE** | 16000 | ND | | ND | | ND | |
| | **ETHYLBENZENE** | 7800 | ND | | ND | | ND | |
| | **XYLENE (TOTAL)** | 160000 | ND | | ND | | ND | |
| | **METHYLENE CHLORIDE** | 85 | | | | | | |
| | **ACETONE** | 7800 | | | | | | |
| **BNA** | **NAPHTHALENE** | 1600 | ND | | ND | | ND | |
| | **ACENAPHTHENE** | 4700 | ND | | ND | | ND | |
| | **FLUORENE** | 3100 | ND | | ND | | ND | |
| | **PHENANTHRENE** | 23000 | ND | | ND | | ND | |
| | **ANTHRACENE** | 23000 | ND | | ND | | ND | |
| | **FLUORANTHENE** | 3100 | ND | | ND | | ND | |
| | **PYRENE** | 2300 | ND | | ND | | ND | |
| | **BENZO(A)ANTHRACENE** | .87 | ND | | ND | | ND | |
| | **BENZO(B)FLUORANTHENE** | .87 | ND | | ND | | ND | |
| | **CHRYSENE** | 87 | ND | | ND | | ND | |
| | **BENZO(K)FLUORANTHENE** | 8.7 | ND | | ND | | ND | |

Notes:

* "> CAL" equals "X" when reported value is above characterization action level for this locale.
J flag - Numerical value is an estimated quantity.
ND indicates Non-Detect
Blank cells in result column indicate an analysis was not performed for that analyte.

Date generated: November 20, 2000

# Table 4-3
# Summary of Analytical Results

| | | | | | | | | |
|---|---|---|---|---|---|---|---|---|
| | | PRA | | | | | | |
| | | PRA Description | | | | | | |
| | | Sample Type | | | | | | |
| | | Sample Id | **BRK-FSB008-70002** | | **BRK-FSB008-70003** | | **BRK-FSB009-70001** | |
| | | Depth - ft bgs | **2 - 2.5** | | **3.5 - 4** | | **0 - 1** | |
| | | Collected Date | **06/13/00** | | **06/13/00** | | **06/14/00** | |
| | | Laboratory | **Lancaster Laboratories** | | **Lancaster Laboratories** | | **Lancaster Laboratories** | |
| | | Sample Collector | **IT Corporation (Fluor Daniel/GTI** | | **IT Corporation (Fluor Daniel/GTI** | | **IT Corporation (Fluor Daniel/GTI** | |
| | | Result Units | **MG/KG** | | **MG/KG** | | **MG/KG** | |
| Category | Analyte | Action Level | **Result Flag** | **> CAL*** | **Result Flag** | **> CAL*** | **Result Flag** | **> CAL*** |
| | **BENZO(A)PYRENE** | .087 | ND | | ND | | ND | |
| | **DIBENZO(A,H)ANTHRACENE** | .087 | ND | | ND | | ND | |
| | **BENZO(G,H,I)PERYLENE** | 2300 | ND | | ND | | ND | |
| | **INDENO(1,2,3-CD)PYRENE** | .87 | ND | | ND | | ND | |
| **P/PCB** | **AROCLOR-1254** | 1 | | | | | | |
| **METAL** | **BARIUM, TOTAL** | 5500 | | | | | | |
| | **BERYLLIUM, TOTAL** | 160 | | | | | | |
| | **CADMIUM, TOTAL** | 39 | | | | | | |
| | **CHROMIUM, TOTAL** | 230 | | | | | | |
| | **LEAD, TOTAL** | 400 | | | | | | |
| | **NICKEL, TOTAL** | 1600 | | | | | | |
| | **MERCURY, TOTAL** | 20 | | | | | | |
| | **ARSENIC, TOTAL** | .43 | | | | | | |

Notes:

* "> CAL" equals "X" when reported value is above characterization action level for this locale.
J flag - Numerical value is an estimated quantity.
ND indicates Non-Detect
Blank cells in result column indicate an analysis was not performed for that analyte.

Date generated: November 20, 2000

# Table 4-3
# Summary of Analytical Results

| | | | | | | | | |
|---|---|---|---|---|---|---|---|---|
| | | PRA | | | | | | |
| | | PRA Description | | | | | | |
| | | Sample Type | | | | | | |
| | | Sample Id | **BRK-FSB009-70002** | | **BRK-FSB009-70003** | | **BRK-FSB010-70001** | |
| | | Depth - ft bgs | **2 - 2.5** | | **3.5 - 4** | | **0 - 1** | |
| | | Collected Date | **06/14/00** | | **06/14/00** | | **06/14/00** | |
| | | Laboratory | **Lancaster Laboratories** | | **Lancaster Laboratories** | | **Lancaster Laboratories** | |
| | | Sample Collector | **IT Corporation (Fluor Daniel/GTI** | | **IT Corporation (Fluor Daniel/GTI** | | **IT Corporation (Fluor Daniel/GTI** | |
| | | Result Units | **MG/KG** | | **MG/KG** | | **MG/KG** | |
| Category | Analyte | Action Level | **Result Flag** | **> CAL*** | **Result Flag** | **> CAL*** | **Result Flag** | **> CAL*** |
| **VOA** | **BENZENE** | 12 | ND | | ND | | ND | |
| | **TOLUENE** | 16000 | ND | | ND | | ND | |
| | **ETHYLBENZENE** | 7800 | ND | | ND | | ND | |
| | **XYLENE (TOTAL)** | 160000 | ND | | ND | | ND | |
| | **METHYLENE CHLORIDE** | 85 | | | | | | |
| | **ACETONE** | 7800 | | | | | | |
| **BNA** | **NAPHTHALENE** | 1600 | ND | | ND | | ND | |
| | **ACENAPHTHENE** | 4700 | ND | | ND | | ND | |
| | **FLUORENE** | 3100 | ND | | ND | | ND | |
| | **PHENANTHRENE** | 23000 | ND | | ND | | ND | |
| | **ANTHRACENE** | 23000 | ND | | ND | | ND | |
| | **FLUORANTHENE** | 3100 | ND | | ND | | ND | |
| | **PYRENE** | 2300 | ND | | ND | | ND | |
| | **BENZO(A)ANTHRACENE** | .87 | ND | | ND | | ND | |
| | **BENZO(B)FLUORANTHENE** | .87 | ND | | ND | | ND | |
| | **CHRYSENE** | 87 | ND | | ND | | ND | |
| | **BENZO(K)FLUORANTHENE** | 8.7 | ND | | ND | | ND | |

Notes:

* "> CAL" equals "X" when reported value is above characterization action level for this locale.
J flag - Numerical value is an estimated quantity.
ND indicates Non-Detect
Blank cells in result column indicate an analysis was not performed for that analyte.

Date generated: November 20, 2000

# Table 4-3
# Summary of Analytical Results

| | | | | | | | | |
|---|---|---|---|---|---|---|---|---|
| | | PRA | | | | | | |
| | | PRA Description | | | | | | |
| | | Sample Type | | | | | | |
| | | Sample Id | **BRK-FSB009-70002** | | **BRK-FSB009-70003** | | **BRK-FSB010-70001** | |
| | | Depth - ft bgs | **2 - 2.5** | | **3.5 - 4** | | **0 - 1** | |
| | | Collected Date | **06/14/00** | | **06/14/00** | | **06/14/00** | |
| | | Laboratory | **Lancaster Laboratories** | | **Lancaster Laboratories** | | **Lancaster Laboratories** | |
| | | Sample Collector | **IT Corporation (Fluor Daniel/GTI** | | **IT Corporation (Fluor Daniel/GTI** | | **IT Corporation (Fluor Daniel/GTI** | |
| | | Result Units | **MG/KG** | | **MG/KG** | | **MG/KG** | |
| Category | Analyte | Action Level | **Result Flag** | **> CAL*** | **Result Flag** | **> CAL*** | **Result Flag** | **> CAL*** |
| | **BENZO(A)PYRENE** | .087 | ND | | ND | | ND | |
| | **DIBENZO(A,H)ANTHRACENE** | .087 | ND | | ND | | ND | |
| | **BENZO(G,H,I)PERYLENE** | 2300 | ND | | ND | | ND | |
| | **INDENO(1,2,3-CD)PYRENE** | .87 | ND | | ND | | ND | |
| **P/PCB** | **AROCLOR-1254** | 1 | | | | | | |
| **METAL** | **BARIUM, TOTAL** | 5500 | | | | | | |
| | **BERYLLIUM, TOTAL** | 160 | | | | | | |
| | **CADMIUM, TOTAL** | 39 | | | | | | |
| | **CHROMIUM, TOTAL** | 230 | | | | | | |
| | **LEAD, TOTAL** | 400 | | | | | | |
| | **NICKEL, TOTAL** | 1600 | | | | | | |
| | **MERCURY, TOTAL** | 20 | | | | | | |
| | **ARSENIC, TOTAL** | .43 | | | | | | |

Notes:

* "> CAL" equals "X" when reported value is above characterization action level for this locale.
J flag - Numerical value is an estimated quantity.
ND indicates Non-Detect
Blank cells in result column indicate an analysis was not performed for that analyte.

Date generated: November 20, 2000

# Table 4-3
# Summary of Analytical Results

| | | | | | | | | |
|---|---|---|---|---|---|---|---|---|
| | | PRA | | | | | | |
| | | PRA Description | | | | | | |
| | | Sample Type | | | | | | |
| | | Sample Id | **BRK-FSB010-70002** | | **BRK-FSB010-70003** | | **BRK-FSB011-70001** | |
| | | Depth - ft bgs | **2 - 2.5** | | **3.5 - 4** | | **0 - 1** | |
| | | Collected Date | **06/14/00** | | **06/14/00** | | **06/14/00** | |
| | | Laboratory | **Lancaster Laboratories** | | **Lancaster Laboratories** | | **Lancaster Laboratories** | |
| | | Sample Collector | **IT Corporation (Fluor Daniel/GTI** | | **IT Corporation (Fluor Daniel/GTI** | | **IT Corporation (Fluor Daniel/GTI** | |
| | | Result Units | **MG/KG** | | **MG/KG** | | **MG/KG** | |
| Category | Analyte | Action Level | **Result Flag** | **> CAL*** | **Result Flag** | **> CAL*** | **Result Flag** | **> CAL*** |
| **VOA** | **BENZENE** | 12 | ND | | ND | | ND | |
| | **TOLUENE** | 16000 | ND | | ND | | ND | |
| | **ETHYLBENZENE** | 7800 | ND | | ND | | ND | |
| | **XYLENE (TOTAL)** | 160000 | ND | | ND | | ND | |
| | **METHYLENE CHLORIDE** | 85 | | | | | | |
| | **ACETONE** | 7800 | | | | | | |
| **BNA** | **NAPHTHALENE** | 1600 | ND | | ND | | ND | |
| | **ACENAPHTHENE** | 4700 | ND | | ND | | ND | |
| | **FLUORENE** | 3100 | ND | | ND | | ND | |
| | **PHENANTHRENE** | 23000 | ND | | ND | | ND | |
| | **ANTHRACENE** | 23000 | ND | | ND | | ND | |
| | **FLUORANTHENE** | 3100 | ND | | ND | | ND | |
| | **PYRENE** | 2300 | ND | | ND | | ND | |
| | **BENZO(A)ANTHRACENE** | .87 | ND | | ND | | ND | |
| | **BENZO(B)FLUORANTHENE** | .87 | ND | | ND | | ND | |
| | **CHRYSENE** | 87 | ND | | ND | | ND | |
| | **BENZO(K)FLUORANTHENE** | 8.7 | ND | | ND | | ND | |

Notes:

* "> CAL" equals "X" when reported value is above characterization action level for this locale.
J flag - Numerical value is an estimated quantity.
ND indicates Non-Detect
Blank cells in result column indicate an analysis was not performed for that analyte.

Date generated: November 20, 2000

# Table 4-3
# Summary of Analytical Results

| | | | | | | | | |
|---|---|---|---|---|---|---|---|---|
| | | PRA | | | | | | |
| | | PRA Description | | | | | | |
| | | Sample Type | | | | | | |
| | | Sample Id | **BRK-FSB010-70002** | | **BRK-FSB010-70003** | | **BRK-FSB011-70001** | |
| | | Depth - ft bgs | **2 - 2.5** | | **3.5 - 4** | | **0 - 1** | |
| | | Collected Date | **06/14/00** | | **06/14/00** | | **06/14/00** | |
| | | Laboratory | **Lancaster Laboratories** | | **Lancaster Laboratories** | | **Lancaster Laboratories** | |
| | | Sample Collector | **IT Corporation (Fluor Daniel/GTI** | | **IT Corporation (Fluor Daniel/GTI** | | **IT Corporation (Fluor Daniel/GTI** | |
| | | Result Units | **MG/KG** | | **MG/KG** | | **MG/KG** | |
| Category | Analyte | Action Level | **Result Flag** | **> CAL*** | **Result Flag** | **> CAL*** | **Result Flag** | **> CAL*** |
| | **BENZO(A)PYRENE** | .087 | ND | | ND | | ND | |
| | **DIBENZO(A,H)ANTHRACENE** | .087 | ND | | ND | | ND | |
| | **BENZO(G,H,I)PERYLENE** | 2300 | ND | | ND | | ND | |
| | **INDENO(1,2,3-CD)PYRENE** | .87 | ND | | ND | | ND | |
| **P/PCB** | **AROCLOR-1254** | 1 | | | | | | |
| **METAL** | **BARIUM, TOTAL** | 5500 | | | | | | |
| | **BERYLLIUM, TOTAL** | 160 | | | | | | |
| | **CADMIUM, TOTAL** | 39 | | | | | | |
| | **CHROMIUM, TOTAL** | 230 | | | | | | |
| | **LEAD, TOTAL** | 400 | | | | | | |
| | **NICKEL, TOTAL** | 1600 | | | | | | |
| | **MERCURY, TOTAL** | 20 | | | | | | |
| | **ARSENIC, TOTAL** | .43 | | | | | | |

Notes:

* "> CAL" equals "X" when reported value is above characterization action level for this locale.
J flag - Numerical value is an estimated quantity.
ND indicates Non-Detect
Blank cells in result column indicate an analysis was not performed for that analyte.

Date generated: November 20, 2000

# Table 4-3
# Summary of Analytical Results

| | | | | | | | | |
|---|---|---|---|---|---|---|---|---|
| | | PRA | | | | | | |
| | | PRA Description | | | | | | |
| | | Sample Type | | | | | | |
| | | Sample Id | **BRK-FSB011-70002** | | **BRK-FSB011-70003** | | **BRK-FSS010-40001** | |
| | | Depth - ft bgs | **2 - 2.5** | | **3.5 - 4** | | **0 - 1** | |
| | | Collected Date | **06/14/00** | | **06/14/00** | | **06/13/00** | |
| | | Laboratory | **Lancaster Laboratories** | | **Lancaster Laboratories** | | **Lancaster Laboratories** | |
| | | Sample Collector | **IT Corporation (Fluor Daniel/GTI** | | **IT Corporation (Fluor Daniel/GTI** | | **IT Corporation (Fluor Daniel/GTI** | |
| | | Result Units | **MG/KG** | | **MG/KG** | | **MG/KG** | |
| Category | Analyte | Action Level | **Result Flag** | **> CAL*** | **Result Flag** | **> CAL*** | **Result Flag** | **> CAL*** |
| **VOA** | **BENZENE** | 12 | ND | | ND | | ND | |
| | **TOLUENE** | 16000 | ND | | ND | | ND | |
| | **ETHYLBENZENE** | 7800 | ND | | ND | | ND | |
| | **XYLENE (TOTAL)** | 160000 | ND | | ND | | ND | |
| | **METHYLENE CHLORIDE** | 85 | | | | | | |
| | **ACETONE** | 7800 | | | | | | |
| **BNA** | **NAPHTHALENE** | 1600 | ND | | ND | | ND | |
| | **ACENAPHTHENE** | 4700 | ND | | ND | | ND | |
| | **FLUORENE** | 3100 | ND | | ND | | ND | |
| | **PHENANTHRENE** | 23000 | ND | | ND | | ND | |
| | **ANTHRACENE** | 23000 | ND | | ND | | ND | |
| | **FLUORANTHENE** | 3100 | ND | | ND | | ND | |
| | **PYRENE** | 2300 | ND | | ND | | ND | |
| | **BENZO(A)ANTHRACENE** | .87 | ND | | ND | | ND | |
| | **BENZO(B)FLUORANTHENE** | .87 | ND | | ND | | ND | |
| | **CHRYSENE** | 87 | ND | | ND | | ND | |
| | **BENZO(K)FLUORANTHENE** | 8.7 | ND | | ND | | ND | |

Notes:

* "> CAL" equals "X" when reported value is above characterization action level for this locale.
J flag - Numerical value is an estimated quantity.
ND indicates Non-Detect
Blank cells in result column indicate an analysis was not performed for that analyte.

Date generated: November 20, 2000

# Table 4-3
# Summary of Analytical Results

| | | | | | | | | |
|---|---|---|---|---|---|---|---|---|
| | | PRA | | | | | | |
| | | PRA Description | | | | | | |
| | | Sample Type | | | | | | |
| | | Sample Id | **BRK-FSB011-70002** | | **BRK-FSB011-70003** | | **BRK-FSS010-40001** | |
| | | Depth - ft bgs | **2 - 2.5** | | **3.5 - 4** | | **0 - 1** | |
| | | Collected Date | **06/14/00** | | **06/14/00** | | **06/13/00** | |
| | | Laboratory | **Lancaster Laboratories** | | **Lancaster Laboratories** | | **Lancaster Laboratories** | |
| | | Sample Collector | **IT Corporation (Fluor Daniel/GTI** | | **IT Corporation (Fluor Daniel/GTI** | | **IT Corporation (Fluor Daniel/GTI** | |
| | | Result Units | **MG/KG** | | **MG/KG** | | **MG/KG** | |
| Category | Analyte | Action Level | **Result Flag** | **> CAL*** | **Result Flag** | **> CAL*** | **Result Flag** | **> CAL*** |
| | **BENZO(A)PYRENE** | .087 | ND | | ND | | ND | |
| | **DIBENZO(A,H)ANTHRACENE** | .087 | ND | | ND | | ND | |
| | **BENZO(G,H,I)PERYLENE** | 2300 | ND | | ND | | ND | |
| | **INDENO(1,2,3-CD)PYRENE** | .87 | ND | | ND | | ND | |
| **P/PCB** | **AROCLOR-1254** | 1 | | | | | | |
| **METAL** | **BARIUM, TOTAL** | 5500 | | | | | | |
| | **BERYLLIUM, TOTAL** | 160 | | | | | | |
| | **CADMIUM, TOTAL** | 39 | | | | | | |
| | **CHROMIUM, TOTAL** | 230 | | | | | | |
| | **LEAD, TOTAL** | 400 | | | | | ND | |
| | **NICKEL, TOTAL** | 1600 | | | | | | |
| | **MERCURY, TOTAL** | 20 | | | | | | |
| | **ARSENIC, TOTAL** | .43 | | | | | | |

Notes:

* "> CAL" equals "X" when reported value is above characterization action level for this locale.
J flag - Numerical value is an estimated quantity.
ND indicates Non-Detect
Blank cells in result column indicate an analysis was not performed for that analyte.

Date generated: November 20, 2000

# Table 4-3
# Summary of Analytical Results

| | | | | | | | | |
|---|---|---|---|---|---|---|---|---|
| | | PRA | | | | | | |
| | | PRA Description | | | | | | |
| | | Sample Type | | | | | | |
| | | Sample Id | **BRK-FSS011-40001** | | **BRK-FSS012-40001** | | **BRK-FSS013-40001** | |
| | | Depth - ft bgs | **0 - 1** | | **0 - 1** | | **0 - 1** | |
| | | Collected Date | **06/13/00** | | **06/13/00** | | **06/13/00** | |
| | | Laboratory | **Lancaster Laboratories** | | **Lancaster Laboratories** | | **Lancaster Laboratories** | |
| | | Sample Collector | **IT Corporation (Fluor Daniel/GTI** | | **IT Corporation (Fluor Daniel/GTI** | | **IT Corporation (Fluor Daniel/GTI** | |
| | | Result Units | **MG/KG** | | **MG/KG** | | **MG/KG** | |
| Category | Analyte | Action Level | **Result Flag** | **> CAL*** | **Result Flag** | **> CAL*** | **Result Flag** | **> CAL*** |
| **VOA** | **BENZENE** | 12 | ND | | ND | | ND | |
| | **TOLUENE** | 16000 | ND | | ND | | ND | |
| | **ETHYLBENZENE** | 7800 | ND | | ND | | ND | |
| | **XYLENE (TOTAL)** | 160000 | ND | | ND | | ND | |
| | **METHYLENE CHLORIDE** | 85 | | | | | | |
| | **ACETONE** | 7800 | | | | | | |
| **BNA** | **NAPHTHALENE** | 1600 | ND | | ND | | ND | |
| | **ACENAPHTHENE** | 4700 | ND | | ND | | ND | |
| | **FLUORENE** | 3100 | ND | | ND | | ND | |
| | **PHENANTHRENE** | 23000 | 0.69 | | ND | | ND | |
| | **ANTHRACENE** | 23000 | ND | | ND | | ND | |
| | **FLUORANTHENE** | 3100 | 1.1 | | 0.52 | | ND | |
| | **PYRENE** | 2300 | 0.87 | | ND | | ND | |
| | **BENZO(A)ANTHRACENE** | .87 | 0.46 | | ND | | ND | |
| | **BENZO(B)FLUORANTHENE** | .87 | 0.52 | | ND | | ND | |
| | **CHRYSENE** | 87 | 0.48 | | ND | | ND | |
| | **BENZO(K)FLUORANTHENE** | 8.7 | ND | | ND | | ND | |

Notes:

* "> CAL" equals "X" when reported value is above characterization action level for this locale.
J flag - Numerical value is an estimated quantity.
ND indicates Non-Detect
Blank cells in result column indicate an analysis was not performed for that analyte.

Date generated: November 20, 2000

# Table 4-3
# Summary of Analytical Results

| | | | | | | | | |
|---|---|---|---|---|---|---|---|---|
| | | PRA | | | | | | |
| | | PRA Description | | | | | | |
| | | Sample Type | | | | | | |
| | | Sample Id | **BRK-FSS011-40001** | | **BRK-FSS012-40001** | | **BRK-FSS013-40001** | |
| | | Depth - ft bgs | **0 - 1** | | **0 - 1** | | **0 - 1** | |
| | | Collected Date | **06/13/00** | | **06/13/00** | | **06/13/00** | |
| | | Laboratory | **Lancaster Laboratories** | | **Lancaster Laboratories** | | **Lancaster Laboratories** | |
| | | Sample Collector | **IT Corporation (Fluor Daniel/GTI** | | **IT Corporation (Fluor Daniel/GTI** | | **IT Corporation (Fluor Daniel/GTI** | |
| | | Result Units | **MG/KG** | | **MG/KG** | | **MG/KG** | |
| Category | Analyte | Action Level | **Result Flag** | **> CAL*** | **Result Flag** | **> CAL*** | **Result Flag** | **> CAL*** |
| | **BENZO(A)PYRENE** | .087 | ND | | ND | | ND | |
| | **DIBENZO(A,H)ANTHRACENE** | .087 | ND | | ND | | ND | |
| | **BENZO(G,H,I)PERYLENE** | 2300 | ND | | ND | | ND | |
| | **INDENO(1,2,3-CD)PYRENE** | .87 | ND | | ND | | ND | |
| **P/PCB** | **AROCLOR-1254** | 1 | | | | | | |
| **METAL** | **BARIUM, TOTAL** | 5500 | | | | | | |
| | **BERYLLIUM, TOTAL** | 160 | | | | | | |
| | **CADMIUM, TOTAL** | 39 | | | | | | |
| | **CHROMIUM, TOTAL** | 230 | | | | | | |
| | **LEAD, TOTAL** | 400 | | | | | | |
| | **NICKEL, TOTAL** | 1600 | | | | | | |
| | **MERCURY, TOTAL** | 20 | | | | | | |
| | **ARSENIC, TOTAL** | .43 | | | | | | |

Notes:

* "> CAL" equals "X" when reported value is above characterization action level for this locale.
J flag - Numerical value is an estimated quantity.
ND indicates Non-Detect
Blank cells in result column indicate an analysis was not performed for that analyte.

Date generated: November 20, 2000

# Table 4-3
## Summary of Analytical Results

| | | | | | | | | |
|---|---|---|---|---|---|---|---|---|
| | | PRA | 2 | | | | | |
| | | PRA Description | DEHY WASTE WATER AT | | | | | |
| | | Sample Type | Normal Sample | | | | | |
| | | Sample Id | BRK-FSB012-70001 | | BRK-FSB012-70002 | | BRK-FSB012-70003 | |
| | | Depth - ft bgs | 0 - 1 | | 2 - 2.5 | | 3.5 - 4 | |
| | | Collected Date | 06/14/00 | | 06/14/00 | | 06/14/00 | |
| | | Laboratory | Lancaster Laboratories | | Lancaster Laboratories | | Lancaster Laboratories | |
| | | Sample Collector | IT Corporation (Fluor Daniel/GTI | | IT Corporation (Fluor Daniel/GTI | | IT Corporation (Fluor Daniel/GTI | |
| | | Result Units | MG/KG | | MG/KG | | MG/KG | |
| Category | Analyte | Action Level | Result Flag | > CAL* | Result Flag | > CAL* | Result Flag | > CAL* |
| VOA | BENZENE | 12 | ND | | ND | | ND | |
| | TOLUENE | 16000 | ND | | ND | | ND | |
| | ETHYLBENZENE | 7800 | ND | | ND | | 0.031 | |
| | XYLENE (TOTAL) | 160000 | ND | | ND | | 0.007 | |
| | METHYLENE CHLORIDE | 85 | ND | | ND | | ND | |
| | ACETONE | 7800 | ND | | ND | | ND | |
| BNA | NAPHTHALENE | 1600 | ND | | ND | | ND | |
| | ACENAPHTHENE | 4700 | ND | | ND | | ND | |
| | FLUORENE | 3100 | ND | | ND | | ND | |
| | PHENANTHRENE | 23000 | ND | | ND | | ND | |
| | ANTHRACENE | 23000 | ND | | ND | | ND | |
| | FLUORANTHENE | 3100 | ND | | ND | | ND | |
| | PYRENE | 2300 | ND | | ND | | ND | |
| | BENZO(A)ANTHRACENE | .87 | ND | | ND | | ND | |
| | BENZO(B)FLUORANTHENE | .87 | ND | | ND | | ND | |
| | CHRYSENE | 87 | ND | | ND | | ND | |
| | BENZO(K)FLUORANTHENE | 8.7 | ND | | ND | | ND | |

Notes:

* "> CAL" equals "X" when reported value is above characterization action level for this locale.
J flag - Numerical value is an estimated quantity.
ND indicates Non-Detect
Blank cells in result column indicate an analysis was not performed for that analyte.

Date generated: November 20, 2000

# Table 4-3
# Summary of Analytical Results

| | | | | | | | | |
|---|---|---|---|---|---|---|---|---|
| | | PRA | 2 | | | | | |
| | | PRA Description | DEHY WASTE WATER AT | | | | | |
| | | Sample Type | Normal Sample | | | | | |
| | | Sample Id | BRK-FSB012-70001 | | BRK-FSB012-70002 | | BRK-FSB012-70003 | |
| | | Depth - ft bgs | 0 - 1 | | 2 - 2.5 | | 3.5 - 4 | |
| | | Collected Date | 06/14/00 | | 06/14/00 | | 06/14/00 | |
| | | Laboratory | Lancaster Laboratories | | Lancaster Laboratories | | Lancaster Laboratories | |
| | | Sample Collector | IT Corporation (Fluor Daniel/GTI | | IT Corporation (Fluor Daniel/GTI | | IT Corporation (Fluor Daniel/GTI | |
| | | Result Units | MG/KG | | MG/KG | | MG/KG | |
| Category | Analyte | Action Level | Result Flag | > CAL* | Result Flag | > CAL* | Result Flag | > CAL* |
| | BENZO(A)PYRENE | .087 | ND | | ND | | ND | |
| | DIBENZO(A,H)ANTHRACENE | .087 | ND | | ND | | ND | |
| | BENZO(G,H,I)PERYLENE | 2300 | ND | | ND | | ND | |
| | INDENO(1,2,3-CD)PYRENE | .87 | ND | | ND | | ND | |
| P/PCB | AROCLOR-1254 | 1 | ND | | ND | | ND | |
| METAL | BARIUM, TOTAL | 5500 | 40.4 | | 39.8 | | 49.2 | |
| | BERYLLIUM, TOTAL | 160 | ND | | ND | | ND | |
| | CADMIUM, TOTAL | 39 | ND | | ND | | ND | |
| | CHROMIUM, TOTAL | 230 | 18.6 | | 14.3 | | 13.4 | |
| | LEAD, TOTAL | 400 | ND | | ND | | ND | |
| | NICKEL, TOTAL | 1600 | 16.8 | | 17.7 | | 14.3 | |
| | MERCURY, TOTAL | 20 | ND | | ND | | ND | |
| | ARSENIC, TOTAL | .43 | 14.4 | X | 11.5 | X | 8.3 | X |

Notes:

* "> CAL" equals "X" when reported value is above characterization action level for this locale.
J flag - Numerical value is an estimated quantity.
ND indicates Non-Detect
Blank cells in result column indicate an analysis was not performed for that analyte.

Date generated: November 20, 2000

# Table 4-3
# Summary of Analytical Results

| | | | | | | | | |
|---|---|---|---|---|---|---|---|---|
| | | PRA | | | | | | |
| | | PRA Description | | | | | | |
| | | Sample Type | | | | | | |
| | | Sample Id | **BRK-FSB013-70001** | | **BRK-FSB013-70002** | | **BRK-FSB013-70003** | |
| | | Depth - ft bgs | **0 - 1** | | **2 - 2.5** | | **3.5 - 4** | |
| | | Collected Date | **06/14/00** | | **06/14/00** | | **06/14/00** | |
| | | Laboratory | **Lancaster Laboratories** | | **Lancaster Laboratories** | | **Lancaster Laboratories** | |
| | | Sample Collector | **IT Corporation (Fluor Daniel/GTI** | | **IT Corporation (Fluor Daniel/GTI** | | **IT Corporation (Fluor Daniel/GTI** | |
| | | Result Units | **MG/KG** | | **MG/KG** | | **MG/KG** | |
| Category | Analyte | Action Level | **Result Flag** | **> CAL*** | **Result Flag** | **> CAL*** | **Result Flag** | **> CAL*** |
| **VOA** | **BENZENE** | 12 | 2.3 | | 0.25 | | 0.068 J | |
| | **TOLUENE** | 16000 | 0.024 J | | ND | | ND | |
| | **ETHYLBENZENE** | 7800 | 5.1 | | 0.48 | | 0.083 J | |
| | **XYLENE (TOTAL)** | 160000 | 32 | | 1.8 | | 0.041 | |
| | **METHYLENE CHLORIDE** | 85 | ND | | ND | | ND | |
| | **ACETONE** | 7800 | 0.11 J | | ND | | ND | |
| **BNA** | **NAPHTHALENE** | 1600 | ND | | ND | | ND | |
| | **ACENAPHTHENE** | 4700 | ND | | ND | | ND | |
| | **FLUORENE** | 3100 | ND | | ND | | ND | |
| | **PHENANTHRENE** | 23000 | ND | | ND | | ND | |
| | **ANTHRACENE** | 23000 | ND | | ND | | ND | |
| | **FLUORANTHENE** | 3100 | ND | | ND | | ND | |
| | **PYRENE** | 2300 | ND | | ND | | ND | |
| | **BENZO(A)ANTHRACENE** | .87 | ND | | ND | | ND | |
| | **BENZO(B)FLUORANTHENE** | .87 | ND | | ND | | ND | |
| | **CHRYSENE** | 87 | ND | | ND | | ND | |
| | **BENZO(K)FLUORANTHENE** | 8.7 | ND | | ND | | ND | |

Notes:

* "> CAL" equals "X" when reported value is above characterization action level for this locale.
J flag - Numerical value is an estimated quantity.
ND indicates Non-Detect
Blank cells in result column indicate an analysis was not performed for that analyte.

Date generated: November 20, 2000

# Table 4-3
# Summary of Analytical Results

| | | | | | | | | |
|---|---|---|---|---|---|---|---|---|
| | | PRA | | | | | | |
| | | PRA Description | | | | | | |
| | | Sample Type | | | | | | |
| | | Sample Id | **BRK-FSB013-70001** | | **BRK-FSB013-70002** | | **BRK-FSB013-70003** | |
| | | Depth - ft bgs | **0 - 1** | | **2 - 2.5** | | **3.5 - 4** | |
| | | Collected Date | **06/14/00** | | **06/14/00** | | **06/14/00** | |
| | | Laboratory | **Lancaster Laboratories** | | **Lancaster Laboratories** | | **Lancaster Laboratories** | |
| | | Sample Collector | **IT Corporation (Fluor Daniel/GTI** | | **IT Corporation (Fluor Daniel/GTI** | | **IT Corporation (Fluor Daniel/GTI** | |
| | | Result Units | **MG/KG** | | **MG/KG** | | **MG/KG** | |
| Category | Analyte | Action Level | **Result Flag** | **> CAL*** | **Result Flag** | **> CAL*** | **Result Flag** | **> CAL*** |
| | **BENZO(A)PYRENE** | .087 | ND | | ND | | ND | |
| | **DIBENZO(A,H)ANTHRACENE** | .087 | ND | | ND | | ND | |
| | **BENZO(G,H,I)PERYLENE** | 2300 | ND | | ND | | ND | |
| | **INDENO(1,2,3-CD)PYRENE** | .87 | ND | | ND | | ND | |
| **P/PCB** | **AROCLOR-1254** | 1 | 0.13 | | ND | | ND | |
| **METAL** | **BARIUM, TOTAL** | 5500 | 45.2 | | 71.6 | | 46.1 | |
| | **BERYLLIUM, TOTAL** | 160 | ND | | ND | | ND | |
| | **CADMIUM, TOTAL** | 39 | ND | | ND | | ND | |
| | **CHROMIUM, TOTAL** | 230 | 17.0 | | 12.4 | | 10.8 | |
| | **LEAD, TOTAL** | 400 | ND | | ND | | ND | |
| | **NICKEL, TOTAL** | 1600 | 17.9 | | 26.7 | | 18.5 | |
| | **MERCURY, TOTAL** | 20 | ND | | ND | | ND | |
| | **ARSENIC, TOTAL** | .43 | 14.3 | X | 16.7 | X | 9.4 | X |

Notes:

* "> CAL" equals "X" when reported value is above characterization action level for this locale.
J flag - Numerical value is an estimated quantity.
ND indicates Non-Detect
Blank cells in result column indicate an analysis was not performed for that analyte.

Date generated: November 20, 2000

# Table 4-3
# Summary of Analytical Results

| | | | | | | | | |
|---|---|---|---|---|---|---|---|---|
| | | PRA | | | | | 3 | |
| | | PRA Description | | | | | AT PAD | |
| | | Sample Type | | | | | Normal Sample | |
| | | Sample Id | BRK-FSS020-40001 | | BRK-FSS021-40001 | | BRK-FSB016-70001 | |
| | | Depth - ft bgs | 0 - 1 | | 0 - 1 | | 0 - 1 | |
| | | Collected Date | 06/14/00 | | 06/14/00 | | 06/14/00 | |
| | | Laboratory | Lancaster Laboratories | | Lancaster Laboratories | | Lancaster Laboratories | |
| | | Sample Collector | IT Corporation (Fluor Daniel/GTI | | IT Corporation (Fluor Daniel/GTI | | IT Corporation (Fluor Daniel/GTI | |
| | | Result Units | MG/KG | | MG/KG | | MG/KG | |
| Category | Analyte | Action Level | Result Flag | > CAL* | Result Flag | > CAL* | Result Flag | > CAL* |
| VOA | BENZENE | 12 | 5.6 | | ND | | ND | |
| | TOLUENE | 16000 | 140 | | ND | | ND | |
| | ETHYLBENZENE | 7800 | 72 | | 0.017 | | ND | |
| | XYLENE (TOTAL) | 160000 | 450 | | 0.055 | | 0.025 | |
| | METHYLENE CHLORIDE | 85 | ND | | ND | | ND | |
| | ACETONE | 7800 | ND | | ND | | ND | |
| BNA | NAPHTHALENE | 1600 | 1.2 | | ND | | ND | |
| | ACENAPHTHENE | 4700 | ND | | ND | | ND | |
| | FLUORENE | 3100 | ND | | ND | | ND | |
| | PHENANTHRENE | 23000 | ND | | ND | | ND | |
| | ANTHRACENE | 23000 | ND | | ND | | ND | |
| | FLUORANTHENE | 3100 | ND | | ND | | ND | |
| | PYRENE | 2300 | ND | | ND | | ND | |
| | BENZO(A)ANTHRACENE | .87 | ND | | ND | | ND | |
| | BENZO(B)FLUORANTHENE | .87 | ND | | ND | | ND | |
| | CHRYSENE | 87 | ND | | ND | | ND | |
| | BENZO(K)FLUORANTHENE | 8.7 | ND | | ND | | ND | |

Notes:

* "> CAL" equals "X" when reported value is above characterization action level for this locale.
J flag - Numerical value is an estimated quantity.
ND indicates Non-Detect
Blank cells in result column indicate an analysis was not performed for that analyte.

Date generated: November 20, 2000

# Table 4-3
# Summary of Analytical Results

| | | | | | | | | |
|---|---|---|---|---|---|---|---|---|
| | | PRA | | | | | 3 | |
| | | PRA Description | | | | | AT PAD | |
| | | Sample Type | | | | | Normal Sample | |
| | | Sample Id | BRK-FSS020-40001 | | BRK-FSS021-40001 | | BRK-FSB016-70001 | |
| | | Depth - ft bgs | 0 - 1 | | 0 - 1 | | 0 - 1 | |
| | | Collected Date | 06/14/00 | | 06/14/00 | | 06/14/00 | |
| | | Laboratory | Lancaster Laboratories | | Lancaster Laboratories | | Lancaster Laboratories | |
| | | Sample Collector | IT Corporation (Fluor Daniel/GTI | | IT Corporation (Fluor Daniel/GTI | | IT Corporation (Fluor Daniel/GTI | |
| | | Result Units | MG/KG | | MG/KG | | MG/KG | |
| Category | Analyte | Action Level | Result Flag | > CAL* | Result Flag | > CAL* | Result Flag | > CAL* |
| | BENZO(A)PYRENE | .087 | ND | | ND | | ND | |
| | DIBENZO(A,H)ANTHRACENE | .087 | ND | | ND | | ND | |
| | BENZO(G,H,I)PERYLENE | 2300 | ND | | ND | | ND | |
| | INDENO(1,2,3-CD)PYRENE | .87 | ND | | ND | | ND | |
| P/PCB | AROCLOR-1254 | 1 | ND | | ND | | 0.091 | |
| METAL | BARIUM, TOTAL | 5500 | 192 | | 38.1 | | 54.8 | |
| | BERYLLIUM, TOTAL | 160 | ND | | ND | | ND | |
| | CADMIUM, TOTAL | 39 | ND | | ND | | ND | |
| | CHROMIUM, TOTAL | 230 | 14.5 | | 14.0 | | 20.3 | |
| | LEAD, TOTAL | 400 | ND | | ND | | ND | |
| | NICKEL, TOTAL | 1600 | 17.7 | | 14.8 | | 13.1 | |
| | MERCURY, TOTAL | 20 | ND | | ND | | ND | |
| | ARSENIC, TOTAL | .43 | 12.7 | X | 10.8 | X | 11.5 | X |

Notes:

* "> CAL" equals "X" when reported value is above characterization action level for this locale.
J flag - Numerical value is an estimated quantity.
ND indicates Non-Detect
Blank cells in result column indicate an analysis was not performed for that analyte.

Date generated: November 20, 2000

# Table 4-3
# Summary of Analytical Results

| | | | | | | | | |
|---|---|---|---|---|---|---|---|---|
| | | PRA | | | | | | |
| | | PRA Description | | | | | | |
| | | Sample Type | | | | | | |
| | | Sample Id | **BRK-FSB016-70002** | | **BRK-FSB016-70003** | | **BRK-FSB017-70001** | |
| | | Depth - ft bgs | **2 - 2.5** | | **3.5 - 4** | | **0 - 1** | |
| | | Collected Date | **06/14/00** | | **06/14/00** | | **06/14/00** | |
| | | Laboratory | **Lancaster Laboratories** | | **Lancaster Laboratories** | | **Lancaster Laboratories** | |
| | | Sample Collector | **IT Corporation (Fluor Daniel/GTI** | | **IT Corporation (Fluor Daniel/GTI** | | **IT Corporation (Fluor Daniel/GTI** | |
| | | Result Units | **MG/KG** | | **MG/KG** | | **MG/KG** | |
| Category | Analyte | Action Level | **Result Flag** | **> CAL*** | **Result Flag** | **> CAL*** | **Result Flag** | **> CAL*** |
| **VOA** | **BENZENE** | 12 | ND | | ND | | ND | |
| | **TOLUENE** | 16000 | ND | | ND | | ND | |
| | **ETHYLBENZENE** | 7800 | ND | | ND | | ND | |
| | **XYLENE (TOTAL)** | 160000 | ND | | ND | | ND | |
| | **METHYLENE CHLORIDE** | 85 | ND | | ND | | ND | |
| | **ACETONE** | 7800 | ND | | ND | | ND | |
| **BNA** | **NAPHTHALENE** | 1600 | ND | | ND | | ND | |
| | **ACENAPHTHENE** | 4700 | ND | | ND | | 1.1 | |
| | **FLUORENE** | 3100 | ND | | ND | | 1.1 | |
| | **PHENANTHRENE** | 23000 | ND | | ND | | 6.0 | |
| | **ANTHRACENE** | 23000 | ND | | ND | | 2.6 | |
| | **FLUORANTHENE** | 3100 | ND | | ND | | 5.9 | |
| | **PYRENE** | 2300 | ND | | ND | | 4.8 | |
| | **BENZO(A)ANTHRACENE** | .87 | ND | | ND | | 3.4 | X |
| | **BENZO(B)FLUORANTHENE** | .87 | ND | | ND | | 2.8 | X |
| | **CHRYSENE** | 87 | ND | | ND | | 3.1 | |
| | **BENZO(K)FLUORANTHENE** | 8.7 | ND | | ND | | 1.4 | |

Notes:

* "> CAL" equals "X" when reported value is above characterization action level for this locale.
J flag - Numerical value is an estimated quantity.
ND indicates Non-Detect
Blank cells in result column indicate an analysis was not performed for that analyte.

Date generated: November 20, 2000

# Table 4-3
# Summary of Analytical Results

| | | | | | | | | |
|---|---|---|---|---|---|---|---|---|
| | | PRA | | | | | | |
| | | PRA Description | | | | | | |
| | | Sample Type | | | | | | |
| | | Sample Id | **BRK-FSB016-70002** | | **BRK-FSB016-70003** | | **BRK-FSB017-70001** | |
| | | Depth - ft bgs | **2 - 2.5** | | **3.5 - 4** | | **0 - 1** | |
| | | Collected Date | **06/14/00** | | **06/14/00** | | **06/14/00** | |
| | | Laboratory | **Lancaster Laboratories** | | **Lancaster Laboratories** | | **Lancaster Laboratories** | |
| | | Sample Collector | **IT Corporation (Fluor Daniel/GTI** | | **IT Corporation (Fluor Daniel/GTI** | | **IT Corporation (Fluor Daniel/GTI** | |
| | | Result Units | **MG/KG** | | **MG/KG** | | **MG/KG** | |
| Category | Analyte | Action Level | **Result Flag** | **> CAL*** | **Result Flag** | **> CAL*** | **Result Flag** | **> CAL*** |
| | **BENZO(A)PYRENE** | .087 | ND | | ND | | 2.5 | X |
| | **DIBENZO(A,H)ANTHRACENE** | .087 | ND | | ND | | 0.48 | X |
| | **BENZO(G,H,I)PERYLENE** | 2300 | ND | | ND | | 1.3 | |
| | **INDENO(1,2,3-CD)PYRENE** | .87 | ND | | ND | | 1.6 | X |
| **P/PCB** | **AROCLOR-1254** | 1 | ND | | ND | | ND | |
| **METAL** | **BARIUM, TOTAL** | 5500 | 85.0 | | 75.8 | | 63.9 | |
| | **BERYLLIUM, TOTAL** | 160 | ND | | ND | | ND | |
| | **CADMIUM, TOTAL** | 39 | ND | | ND | | ND | |
| | **CHROMIUM, TOTAL** | 230 | 16.8 | | 26.8 | | 18.6 | |
| | **LEAD, TOTAL** | 400 | ND | | ND | | ND | |
| | **NICKEL, TOTAL** | 1600 | ND | | ND | | 14.5 | |
| | **MERCURY, TOTAL** | 20 | ND | | ND | | ND | |
| | **ARSENIC, TOTAL** | .43 | 9.6 | X | 13.2 | X | 10.4 | X |

Notes:

* "> CAL" equals "X" when reported value is above characterization action level for this locale.
J flag - Numerical value is an estimated quantity.
ND indicates Non-Detect
Blank cells in result column indicate an analysis was not performed for that analyte.

Date generated: November 20, 2000

# Table 4-3
# Summary of Analytical Results

| | | | | | | | | |
|---|---|---|---|---|---|---|---|---|
| | | PRA | | | | | | |
| | | PRA Description | | | | | | |
| | | Sample Type | | | | | | |
| | | Sample Id | **BRK-FSB017-70002** | | **BRK-FSB017-70003** | | **BRK-FSB018-70001** | |
| | | Depth - ft bgs | **2 - 2.5** | | **3.5 - 4** | | **0 - 1** | |
| | | Collected Date | **06/14/00** | | **06/14/00** | | **06/14/00** | |
| | | Laboratory | **Lancaster Laboratories** | | **Lancaster Laboratories** | | **Lancaster Laboratories** | |
| | | Sample Collector | **IT Corporation (Fluor Daniel/GTI** | | **IT Corporation (Fluor Daniel/GTI** | | **IT Corporation (Fluor Daniel/GTI** | |
| | | Result Units | **MG/KG** | | **MG/KG** | | **MG/KG** | |
| Category | Analyte | Action Level | **Result Flag** | **> CAL*** | **Result Flag** | **> CAL*** | **Result Flag** | **> CAL*** |
| **VOA** | **BENZENE** | 12 | ND | | ND | | ND | |
| | **TOLUENE** | 16000 | ND | | ND | | ND | |
| | **ETHYLBENZENE** | 7800 | ND | | ND | | ND | |
| | **XYLENE (TOTAL)** | 160000 | ND | | ND | | ND | |
| | **METHYLENE CHLORIDE** | 85 | ND | | ND | | ND | |
| | **ACETONE** | 7800 | ND | | ND | | ND | |
| **BNA** | **NAPHTHALENE** | 1600 | ND | | ND | | ND | |
| | **ACENAPHTHENE** | 4700 | ND | | ND | | ND | |
| | **FLUORENE** | 3100 | ND | | ND | | ND | |
| | **PHENANTHRENE** | 23000 | ND | | ND | | 2.5 | |
| | **ANTHRACENE** | 23000 | ND | | ND | | 0.77 | |
| | **FLUORANTHENE** | 3100 | ND | | ND | | 2.5 | |
| | **PYRENE** | 2300 | ND | | ND | | 1.9 | |
| | **BENZO(A)ANTHRACENE** | .87 | ND | | ND | | 1.2 | X |
| | **BENZO(B)FLUORANTHENE** | .87 | ND | | ND | | 1.0 | X |
| | **CHRYSENE** | 87 | ND | | ND | | 1.1 | |
| | **BENZO(K)FLUORANTHENE** | 8.7 | ND | | ND | | 0.48 | |

Notes:

* "> CAL" equals "X" when reported value is above characterization action level for this locale.
J flag - Numerical value is an estimated quantity.
ND indicates Non-Detect
Blank cells in result column indicate an analysis was not performed for that analyte.

Date generated: November 20, 2000

# Table 4-3
# Summary of Analytical Results

| | | | | | | | | |
|---|---|---|---|---|---|---|---|---|
| | | PRA | | | | | | |
| | | PRA Description | | | | | | |
| | | Sample Type | | | | | | |
| | | Sample Id | **BRK-FSB017-70002** | | **BRK-FSB017-70003** | | **BRK-FSB018-70001** | |
| | | Depth - ft bgs | **2 - 2.5** | | **3.5 - 4** | | **0 - 1** | |
| | | Collected Date | **06/14/00** | | **06/14/00** | | **06/14/00** | |
| | | Laboratory | **Lancaster Laboratories** | | **Lancaster Laboratories** | | **Lancaster Laboratories** | |
| | | Sample Collector | **IT Corporation (Fluor Daniel/GTI** | | **IT Corporation (Fluor Daniel/GTI** | | **IT Corporation (Fluor Daniel/GTI** | |
| | | Result Units | **MG/KG** | | **MG/KG** | | **MG/KG** | |
| Category | Analyte | Action Level | **Result Flag** | **> CAL*** | **Result Flag** | **> CAL*** | **Result Flag** | **> CAL*** |
| | **BENZO(A)PYRENE** | .087 | ND | | ND | | 0.92 | X |
| | **DIBENZO(A,H)ANTHRACENE** | .087 | ND | | ND | | ND | |
| | **BENZO(G,H,I)PERYLENE** | 2300 | ND | | ND | | 0.51 | |
| | **INDENO(1,2,3-CD)PYRENE** | .87 | ND | | ND | | 0.61 | |
| **P/PCB** | **AROCLOR-1254** | 1 | ND | | ND | | ND | |
| **METAL** | **BARIUM, TOTAL** | 5500 | 79.8 | | 43.4 | | 71.9 | |
| | **BERYLLIUM, TOTAL** | 160 | ND | | ND | | ND | |
| | **CADMIUM, TOTAL** | 39 | ND | | ND | | ND | |
| | **CHROMIUM, TOTAL** | 230 | 20.5 | | 14.4 | | 23.2 | |
| | **LEAD, TOTAL** | 400 | ND | | 23.8 | | 33.5 | |
| | **NICKEL, TOTAL** | 1600 | ND | | 17.2 | | 15.6 | |
| | **MERCURY, TOTAL** | 20 | ND | | ND | | ND | |
| | **ARSENIC, TOTAL** | .43 | 14.2 | X | 14.8 | X | 11.3 | X |

Notes:

* "> CAL" equals "X" when reported value is above characterization action level for this locale.
J flag - Numerical value is an estimated quantity.
ND indicates Non-Detect
Blank cells in result column indicate an analysis was not performed for that analyte.

Date generated: November 20, 2000

# Table 4-3
# Summary of Analytical Results

| | | | | | | | | |
|---|---|---|---|---|---|---|---|---|
| | | PRA | | | | | | |
| | | PRA Description | | | | | | |
| | | Sample Type | | | | | | |
| | | Sample Id | **BRK-FSB018-70002** | | **BRK-FSB018-70003** | | **BRK-FSB019-70001** | |
| | | Depth - ft bgs | **2 - 2.5** | | **3.5 - 4** | | **0 - 1** | |
| | | Collected Date | **06/14/00** | | **06/14/00** | | **06/15/00** | |
| | | Laboratory | **Lancaster Laboratories** | | **Lancaster Laboratories** | | **Lancaster Laboratories** | |
| | | Sample Collector | **IT Corporation (Fluor Daniel/GTI** | | **IT Corporation (Fluor Daniel/GTI** | | **IT Corporation (Fluor Daniel/GTI** | |
| | | Result Units | **MG/KG** | | **MG/KG** | | **MG/KG** | |
| Category | Analyte | Action Level | **Result Flag** | **> CAL*** | **Result Flag** | **> CAL*** | **Result Flag** | **> CAL*** |
| **VOA** | **BENZENE** | 12 | ND | | ND | | ND | |
| | **TOLUENE** | 16000 | ND | | ND | | ND | |
| | **ETHYLBENZENE** | 7800 | ND | | ND | | ND | |
| | **XYLENE (TOTAL)** | 160000 | ND | | ND | | ND | |
| | **METHYLENE CHLORIDE** | 85 | ND | | ND | | ND | |
| | **ACETONE** | 7800 | ND | | ND | | ND | |
| **BNA** | **NAPHTHALENE** | 1600 | ND | | ND | | ND | |
| | **ACENAPHTHENE** | 4700 | ND | | ND | | 2.3 | |
| | **FLUORENE** | 3100 | ND | | ND | | 2.2 | |
| | **PHENANTHRENE** | 23000 | ND | | ND | | 19 | |
| | **ANTHRACENE** | 23000 | ND | | ND | | 5.6 | |
| | **FLUORANTHENE** | 3100 | ND | | ND | | 24 | |
| | **PYRENE** | 2300 | ND | | ND | | 20 | |
| | **BENZO(A)ANTHRACENE** | .87 | ND | | ND | | 14 | X |
| | **BENZO(B)FLUORANTHENE** | .87 | ND | | ND | | 11 | X |
| | **CHRYSENE** | 87 | ND | | ND | | 13 | |
| | **BENZO(K)FLUORANTHENE** | 8.7 | ND | | ND | | 5.0 | |

Notes:

* "> CAL" equals "X" when reported value is above characterization action level for this locale.
J flag - Numerical value is an estimated quantity.
ND indicates Non-Detect
Blank cells in result column indicate an analysis was not performed for that analyte.

Date generated: November 20, 2000

# Table 4-3
# Summary of Analytical Results

| | | | | | | | | |
|---|---|---|---|---|---|---|---|---|
| | | PRA | | | | | | |
| | | PRA Description | | | | | | |
| | | Sample Type | | | | | | |
| | | Sample Id | **BRK-FSB018-70002** | | **BRK-FSB018-70003** | | **BRK-FSB019-70001** | |
| | | Depth - ft bgs | **2 - 2.5** | | **3.5 - 4** | | **0 - 1** | |
| | | Collected Date | **06/14/00** | | **06/14/00** | | **06/15/00** | |
| | | Laboratory | **Lancaster Laboratories** | | **Lancaster Laboratories** | | **Lancaster Laboratories** | |
| | | Sample Collector | **IT Corporation (Fluor Daniel/GTI** | | **IT Corporation (Fluor Daniel/GTI** | | **IT Corporation (Fluor Daniel/GTI** | |
| | | Result Units | **MG/KG** | | **MG/KG** | | **MG/KG** | |
| Category | Analyte | Action Level | **Result Flag** | **> CAL*** | **Result Flag** | **> CAL*** | **Result Flag** | **> CAL*** |
| | **BENZO(A)PYRENE** | .087 | ND | | ND | | 8.9 | X |
| | **DIBENZO(A,H)ANTHRACENE** | .087 | ND | | ND | | 1.4 | X |
| | **BENZO(G,H,I)PERYLENE** | 2300 | ND | | ND | | 3.6 | |
| | **INDENO(1,2,3-CD)PYRENE** | .87 | ND | | ND | | 4.5 | X |
| **P/PCB** | **AROCLOR-1254** | 1 | ND | | ND | | ND | |
| **METAL** | **BARIUM, TOTAL** | 5500 | 87.1 | | 50.5 | | 63.9 | |
| | **BERYLLIUM, TOTAL** | 160 | ND | | ND | | ND | |
| | **CADMIUM, TOTAL** | 39 | ND | | ND | | ND | |
| | **CHROMIUM, TOTAL** | 230 | 15.9 | | 14.6 | | 21.0 | |
| | **LEAD, TOTAL** | 400 | ND | | ND | | ND | |
| | **NICKEL, TOTAL** | 1600 | 12.9 | | 15.6 | | 15.0 | |
| | **MERCURY, TOTAL** | 20 | ND | | ND | | ND | |
| | **ARSENIC, TOTAL** | .43 | 7.2 | X | 11.1 | X | 13.0 | X |

Notes:

* "> CAL" equals "X" when reported value is above characterization action level for this locale.
J flag - Numerical value is an estimated quantity.
ND indicates Non-Detect
Blank cells in result column indicate an analysis was not performed for that analyte.

Date generated: November 20, 2000

# Table 4-3
# Summary of Analytical Results

| | | | | | | | | |
|---|---|---|---|---|---|---|---|---|
| | | PRA | | | | | 4 | |
| | | PRA Description | | | | | DIESEL FUEL AT | |
| | | Sample Type | | | | | Normal Sample | |
| | | Sample Id | BRK-FSB019-70002 | | BRK-FSB019-70003 | | BRK-FSB020-70001 | |
| | | Depth - ft bgs | 2 - 2.5 | | 3.5 - 4 | | 0 - 1 | |
| | | Collected Date | 06/15/00 | | 06/15/00 | | 06/15/00 | |
| | | Laboratory | Lancaster Laboratories | | Lancaster Laboratories | | Lancaster Laboratories | |
| | | Sample Collector | IT Corporation (Fluor Daniel/GTI | | IT Corporation (Fluor Daniel/GTI | | IT Corporation (Fluor Daniel/GTI | |
| | | Result Units | MG/KG | | MG/KG | | MG/KG | |
| Category | Analyte | Action Level | Result Flag | > CAL* | Result Flag | > CAL* | Result Flag | > CAL* |
| VOA | BENZENE | 12 | ND | | ND | | ND | |
| | TOLUENE | 16000 | ND | | ND | | ND | |
| | ETHYLBENZENE | 7800 | ND | | ND | | ND | |
| | XYLENE (TOTAL) | 160000 | ND | | ND | | ND | |
| | METHYLENE CHLORIDE | 85 | ND | | ND | | | |
| | ACETONE | 7800 | ND | | ND | | | |
| BNA | NAPHTHALENE | 1600 | ND | | ND | | | |
| | ACENAPHTHENE | 4700 | ND | | ND | | | |
| | FLUORENE | 3100 | ND | | ND | | | |
| | PHENANTHRENE | 23000 | ND | | ND | | | |
| | ANTHRACENE | 23000 | ND | | ND | | | |
| | FLUORANTHENE | 3100 | ND | | ND | | | |
| | PYRENE | 2300 | ND | | ND | | | |
| | BENZO(A)ANTHRACENE | .87 | ND | | ND | | | |
| | BENZO(B)FLUORANTHENE | .87 | ND | | ND | | | |
| | CHRYSENE | 87 | ND | | ND | | | |
| | BENZO(K)FLUORANTHENE | 8.7 | ND | | ND | | | |

Notes:

* "> CAL" equals "X" when reported value is above characterization action level for this locale.
J flag - Numerical value is an estimated quantity.
ND indicates Non-Detect
Blank cells in result column indicate an analysis was not performed for that analyte.

Date generated: November 20, 2000

# Table 4-3
# Summary of Analytical Results

| | | | | | | | | |
|---|---|---|---|---|---|---|---|---|
| | | PRA | | | | | 4 | |
| | | PRA Description | | | | | DIESEL FUEL AT | |
| | | Sample Type | | | | | Normal Sample | |
| | | Sample Id | BRK-FSB019-70002 | | BRK-FSB019-70003 | | BRK-FSB020-70001 | |
| | | Depth - ft bgs | 2 - 2.5 | | 3.5 - 4 | | 0 - 1 | |
| | | Collected Date | 06/15/00 | | 06/15/00 | | 06/15/00 | |
| | | Laboratory | Lancaster Laboratories | | Lancaster Laboratories | | Lancaster Laboratories | |
| | | Sample Collector | IT Corporation (Fluor Daniel/GTI | | IT Corporation (Fluor Daniel/GTI | | IT Corporation (Fluor Daniel/GTI | |
| | | Result Units | MG/KG | | MG/KG | | MG/KG | |
| Category | Analyte | Action Level | Result Flag | > CAL* | Result Flag | > CAL* | Result Flag | > CAL* |
| | BENZO(A)PYRENE | .087 | ND | | ND | | | |
| | DIBENZO(A,H)ANTHRACENE | .087 | ND | | ND | | | |
| | BENZO(G,H,I)PERYLENE | 2300 | ND | | ND | | | |
| | INDENO(1,2,3-CD)PYRENE | .87 | ND | | ND | | | |
| P/PCB | AROCLOR-1254 | 1 | ND | | ND | | | |
| METAL | BARIUM, TOTAL | 5500 | 30.5 | | 38.5 | | | |
| | BERYLLIUM, TOTAL | 160 | ND | | ND | | | |
| | CADMIUM, TOTAL | 39 | ND | | ND | | | |
| | CHROMIUM, TOTAL | 230 | 12.9 | | 11.2 | | | |
| | LEAD, TOTAL | 400 | ND | | ND | | ND | |
| | NICKEL, TOTAL | 1600 | 16.4 | | 17.2 | | | |
| | MERCURY, TOTAL | 20 | ND | | ND | | | |
| | ARSENIC, TOTAL | .43 | 13.1 | X | 13.0 | X | | |

Notes:

* "> CAL" equals "X" when reported value is above characterization action level for this locale.
J flag - Numerical value is an estimated quantity.
ND indicates Non-Detect
Blank cells in result column indicate an analysis was not performed for that analyte.

Date generated: November 20, 2000

# Table 4-3
# Summary of Analytical Results

| | | | | | | | | |
|---|---|---|---|---|---|---|---|---|
| | | PRA | | | | | | |
| | | PRA Description | | | | | | |
| | | Sample Type | | | | | | |
| | | Sample Id | **BRK-FSB020-70002** | | **BRK-FSB020-70003** | | **BRK-FSS022-40001** | |
| | | Depth - ft bgs | **2 - 2.5** | | **3.5 - 4** | | **0 - 1** | |
| | | Collected Date | **06/15/00** | | **06/15/00** | | **06/15/00** | |
| | | Laboratory | **Lancaster Laboratories** | | **Lancaster Laboratories** | | **Lancaster Laboratories** | |
| | | Sample Collector | **IT Corporation (Fluor Daniel/GTI** | | **IT Corporation (Fluor Daniel/GTI** | | **IT Corporation (Fluor Daniel/GTI** | |
| | | Result Units | **MG/KG** | | **MG/KG** | | **MG/KG** | |
| Category | Analyte | Action Level | **Result Flag** | **> CAL*** | **Result Flag** | **> CAL*** | **Result Flag** | **> CAL*** |
| **VOA** | **BENZENE** | 12 | ND | | ND | | ND | |
| | **TOLUENE** | 16000 | ND | | ND | | ND | |
| | **ETHYLBENZENE** | 7800 | ND | | ND | | ND | |
| | **XYLENE (TOTAL)** | 160000 | ND | | ND | | ND | |
| | **METHYLENE CHLORIDE** | 85 | | | | | | |
| | **ACETONE** | 7800 | | | | | | |
| **BNA** | **NAPHTHALENE** | 1600 | | | | | | |
| | **ACENAPHTHENE** | 4700 | | | | | | |
| | **FLUORENE** | 3100 | | | | | | |
| | **PHENANTHRENE** | 23000 | | | | | | |
| | **ANTHRACENE** | 23000 | | | | | | |
| | **FLUORANTHENE** | 3100 | | | | | | |
| | **PYRENE** | 2300 | | | | | | |
| | **BENZO(A)ANTHRACENE** | .87 | | | | | | |
| | **BENZO(B)FLUORANTHENE** | .87 | | | | | | |
| | **CHRYSENE** | 87 | | | | | | |
| | **BENZO(K)FLUORANTHENE** | 8.7 | | | | | | |

Notes:

* "> CAL" equals "X" when reported value is above characterization action level for this locale.
J flag - Numerical value is an estimated quantity.
ND indicates Non-Detect
Blank cells in result column indicate an analysis was not performed for that analyte.

Date generated: November 20, 2000

# Table 4-3
# Summary of Analytical Results

| | | | | | | | | |
|---|---|---|---|---|---|---|---|---|
| | | PRA | | | | | | |
| | | PRA Description | | | | | | |
| | | Sample Type | | | | | | |
| | | Sample Id | **BRK-FSB020-70002** | | **BRK-FSB020-70003** | | **BRK-FSS022-40001** | |
| | | Depth - ft bgs | **2 - 2.5** | | **3.5 - 4** | | **0 - 1** | |
| | | Collected Date | **06/15/00** | | **06/15/00** | | **06/15/00** | |
| | | Laboratory | **Lancaster Laboratories** | | **Lancaster Laboratories** | | **Lancaster Laboratories** | |
| | | Sample Collector | **IT Corporation (Fluor Daniel/GTI** | | **IT Corporation (Fluor Daniel/GTI** | | **IT Corporation (Fluor Daniel/GTI** | |
| | | Result Units | **MG/KG** | | **MG/KG** | | **MG/KG** | |
| Category | Analyte | Action Level | **Result Flag** | **> CAL*** | **Result Flag** | **> CAL*** | **Result Flag** | **> CAL*** |
| | **BENZO(A)PYRENE** | .087 | | | | | | |
| | **DIBENZO(A,H)ANTHRACENE** | .087 | | | | | | |
| | **BENZO(G,H,I)PERYLENE** | 2300 | | | | | | |
| | **INDENO(1,2,3-CD)PYRENE** | .87 | | | | | | |
| **P/PCB** | **AROCLOR-1254** | 1 | | | | | | |
| **METAL** | **BARIUM, TOTAL** | 5500 | | | | | | |
| | **BERYLLIUM, TOTAL** | 160 | | | | | | |
| | **CADMIUM, TOTAL** | 39 | | | | | | |
| | **CHROMIUM, TOTAL** | 230 | | | | | | |
| | **LEAD, TOTAL** | 400 | ND | | ND | | ND | |
| | **NICKEL, TOTAL** | 1600 | | | | | | |
| | **MERCURY, TOTAL** | 20 | | | | | | |
| | **ARSENIC, TOTAL** | .43 | | | | | | |

Notes:

* "> CAL" equals "X" when reported value is above characterization action level for this locale.
J flag - Numerical value is an estimated quantity.
ND indicates Non-Detect
Blank cells in result column indicate an analysis was not performed for that analyte.

Date generated: November 20, 2000

# Table 4-3
# Summary of Analytical Results

| | | | | | | | | |
|---|---|---|---|---|---|---|---|---|
| | | PRA | | | | | 5 | |
| | | PRA Description | | | | | USED OIL UT | |
| | | Sample Type | | | | | Field Duplicate (Rep) | |
| | | Sample Id | BRK-FSS023-40001 | | BRK-FSS024-40001 | | BRK-FSS014-41001 | |
| | | Depth - ft bgs | 0 - 1 | | 0 - 1 | | 0 - 1 | |
| | | Collected Date | 06/15/00 | | 06/15/00 | | 06/15/00 | |
| | | Laboratory | Lancaster Laboratories | | Lancaster Laboratories | | Lancaster Laboratories | |
| | | Sample Collector | IT Corporation (Fluor Daniel/GTI | | IT Corporation (Fluor Daniel/GTI | | IT Corporation (Fluor Daniel/GTI | |
| | | Result Units | MG/KG | | MG/KG | | MG/KG | |
| Category | Analyte | Action Level | Result Flag | > CAL* | Result Flag | > CAL* | Result Flag | > CAL* |
| VOA | BENZENE | 12 | ND | | ND | | ND | |
| | TOLUENE | 16000 | ND | | ND | | ND | |
| | ETHYLBENZENE | 7800 | ND | | ND | | ND | |
| | XYLENE (TOTAL) | 160000 | ND | | ND | | ND | |
| | METHYLENE CHLORIDE | 85 | | | | | | |
| | ACETONE | 7800 | | | | | | |
| BNA | NAPHTHALENE | 1600 | | | | | | |
| | ACENAPHTHENE | 4700 | | | | | | |
| | FLUORENE | 3100 | | | | | | |
| | PHENANTHRENE | 23000 | | | | | | |
| | ANTHRACENE | 23000 | | | | | | |
| | FLUORANTHENE | 3100 | | | | | | |
| | PYRENE | 2300 | | | | | | |
| | BENZO(A)ANTHRACENE | .87 | | | | | | |
| | BENZO(B)FLUORANTHENE | .87 | | | | | | |
| | CHRYSENE | 87 | | | | | | |
| | BENZO(K)FLUORANTHENE | 8.7 | | | | | | |

Notes:

* "> CAL" equals "X" when reported value is above characterization action level for this locale.
J flag - Numerical value is an estimated quantity.
ND indicates Non-Detect
Blank cells in result column indicate an analysis was not performed for that analyte.

Date generated: November 20, 2000

# Table 4-3
# Summary of Analytical Results

| | | | | | | | | |
|---|---|---|---|---|---|---|---|---|
| | | PRA | | | | | 5 | |
| | | PRA Description | | | | | USED OIL UT | |
| | | Sample Type | | | | | Field Duplicate (Rep) | |
| | | Sample Id | BRK-FSS023-40001 | | BRK-FSS024-40001 | | BRK-FSS014-41001 | |
| | | Depth - ft bgs | 0 - 1 | | 0 - 1 | | 0 - 1 | |
| | | Collected Date | 06/15/00 | | 06/15/00 | | 06/15/00 | |
| | | Laboratory | Lancaster Laboratories | | Lancaster Laboratories | | Lancaster Laboratories | |
| | | Sample Collector | IT Corporation (Fluor Daniel/GTI | | IT Corporation (Fluor Daniel/GTI | | IT Corporation (Fluor Daniel/GTI | |
| | | Result Units | MG/KG | | MG/KG | | MG/KG | |
| Category | Analyte | Action Level | Result Flag | > CAL* | Result Flag | > CAL* | Result Flag | > CAL* |
| | BENZO(A)PYRENE | .087 | | | | | | |
| | DIBENZO(A,H)ANTHRACENE | .087 | | | | | | |
| | BENZO(G,H,I)PERYLENE | 2300 | | | | | | |
| | INDENO(1,2,3-CD)PYRENE | .87 | | | | | | |
| P/PCB | AROCLOR-1254 | 1 | | | | | ND | |
| METAL | BARIUM, TOTAL | 5500 | | | | | | |
| | BERYLLIUM, TOTAL | 160 | | | | | | |
| | CADMIUM, TOTAL | 39 | | | | | | |
| | CHROMIUM, TOTAL | 230 | | | | | | |
| | LEAD, TOTAL | 400 | ND | | ND | | ND | |
| | NICKEL, TOTAL | 1600 | | | | | | |
| | MERCURY, TOTAL | 20 | | | | | | |
| | ARSENIC, TOTAL | .43 | | | | | | |

Notes:

* "> CAL" equals "X" when reported value is above characterization action level for this locale.
J flag - Numerical value is an estimated quantity.
ND indicates Non-Detect
Blank cells in result column indicate an analysis was not performed for that analyte.

Date generated: November 20, 2000

# Table 4-3
# Summary of Analytical Results

| | | | | | | | | |
|---|---|---|---|---|---|---|---|---|
| | | PRA | | | | | | |
| | | PRA Description | | | | | | |
| | | Sample Type | **Normal Sample** | | | | | |
| | | Sample Id | **BRK-FSB024-70001** | | **BRK-FSB025-70001** | | **BRK-FSS014-40001** | |
| | | Depth - ft bgs | **7 - 8** | | **7 - 8** | | **0 - 1** | |
| | | Collected Date | **06/15/00** | | **06/15/00** | | **06/15/00** | |
| | | Laboratory | **Lancaster Laboratories** | | **Lancaster Laboratories** | | **Lancaster Laboratories** | |
| | | Sample Collector | **IT Corporation (Fluor Daniel/GTI** | | **IT Corporation (Fluor Daniel/GTI** | | **IT Corporation (Fluor Daniel/GTI** | |
| | | Result Units | **MG/KG** | | **MG/KG** | | **MG/KG** | |
| Category | Analyte | Action Level | **Result Flag** | **> CAL*** | **Result Flag** | **> CAL*** | **Result Flag** | **> CAL*** |
| **VOA** | **BENZENE** | 12 | ND | | ND | | ND | |
| | **TOLUENE** | 16000 | ND | | ND | | ND | |
| | **ETHYLBENZENE** | 7800 | ND | | ND | | ND | |
| | **XYLENE (TOTAL)** | 160000 | ND | | ND | | ND | |
| | **METHYLENE CHLORIDE** | 85 | | | | | | |
| | **ACETONE** | 7800 | | | | | | |
| **BNA** | **NAPHTHALENE** | 1600 | | | | | | |
| | **ACENAPHTHENE** | 4700 | | | | | | |
| | **FLUORENE** | 3100 | | | | | | |
| | **PHENANTHRENE** | 23000 | | | | | | |
| | **ANTHRACENE** | 23000 | | | | | | |
| | **FLUORANTHENE** | 3100 | | | | | | |
| | **PYRENE** | 2300 | | | | | | |
| | **BENZO(A)ANTHRACENE** | .87 | | | | | | |
| | **BENZO(B)FLUORANTHENE** | .87 | | | | | | |
| | **CHRYSENE** | 87 | | | | | | |
| | **BENZO(K)FLUORANTHENE** | 8.7 | | | | | | |

Notes:

* "> CAL" equals "X" when reported value is above characterization action level for this locale.
J flag - Numerical value is an estimated quantity.
ND indicates Non-Detect
Blank cells in result column indicate an analysis was not performed for that analyte.

Date generated: November 20, 2000

# Table 4-3
# Summary of Analytical Results

| | | | | | | | | |
|---|---|---|---|---|---|---|---|---|
| | | PRA | | | | | | |
| | | PRA Description | | | | | | |
| | | Sample Type | **Normal Sample** | | | | | |
| | | Sample Id | **BRK-FSB024-70001** | | **BRK-FSB025-70001** | | **BRK-FSS014-40001** | |
| | | Depth - ft bgs | **7 - 8** | | **7 - 8** | | **0 - 1** | |
| | | Collected Date | **06/15/00** | | **06/15/00** | | **06/15/00** | |
| | | Laboratory | **Lancaster Laboratories** | | **Lancaster Laboratories** | | **Lancaster Laboratories** | |
| | | Sample Collector | **IT Corporation (Fluor Daniel/GTI** | | **IT Corporation (Fluor Daniel/GTI** | | **IT Corporation (Fluor Daniel/GTI** | |
| | | Result Units | **MG/KG** | | **MG/KG** | | **MG/KG** | |
| Category | Analyte | Action Level | **Result Flag** | **> CAL*** | **Result Flag** | **> CAL*** | **Result Flag** | **> CAL*** |
| | **BENZO(A)PYRENE** | .087 | | | | | | |
| | **DIBENZO(A,H)ANTHRACENE** | .087 | | | | | | |
| | **BENZO(G,H,I)PERYLENE** | 2300 | | | | | | |
| | **INDENO(1,2,3-CD)PYRENE** | .87 | | | | | | |
| **P/PCB** | **AROCLOR-1254** | 1 | ND | | ND | | ND | |
| **METAL** | **BARIUM, TOTAL** | 5500 | | | | | | |
| | **BERYLLIUM, TOTAL** | 160 | | | | | | |
| | **CADMIUM, TOTAL** | 39 | | | | | | |
| | **CHROMIUM, TOTAL** | 230 | | | | | | |
| | **LEAD, TOTAL** | 400 | ND | | ND | | ND | |
| | **NICKEL, TOTAL** | 1600 | | | | | | |
| | **MERCURY, TOTAL** | 20 | | | | | | |
| | **ARSENIC, TOTAL** | .43 | | | | | | |

Notes:

* "> CAL" equals "X" when reported value is above characterization action level for this locale.
J flag - Numerical value is an estimated quantity.
ND indicates Non-Detect
Blank cells in result column indicate an analysis was not performed for that analyte.

Date generated: November 20, 2000

# Table 4-3
## Summary of Analytical Results

| | | | | | | | | |
|---|---|---|---|---|---|---|---|---|
| | | PRA | 6 | | | | | |
| | | PRA Description | DRIP UT | | | | | |
| | | Sample Type | Normal Sample | | | | | |
| | | Sample Id | BRK-FSB026-70001 | | BRK-FSB027-70001 | | BRK-FSS015-40001 | |
| | | Depth - ft bgs | 6 - 7 | | 7 - 8 | | 0 - 1 | |
| | | Collected Date | 06/15/00 | | 06/15/00 | | 06/15/00 | |
| | | Laboratory | Lancaster Laboratories | | Lancaster Laboratories | | Lancaster Laboratories | |
| | | Sample Collector | IT Corporation (Fluor Daniel/GTI | | IT Corporation (Fluor Daniel/GTI | | IT Corporation (Fluor Daniel/GTI | |
| | | Result Units | MG/KG | | MG/KG | | MG/KG | |
| Category | Analyte | Action Level | Result Flag | > CAL* | Result Flag | > CAL* | Result Flag | > CAL* |
| VOA | BENZENE | 12 | ND | | ND | | ND | |
| | TOLUENE | 16000 | ND | | ND | | ND | |
| | ETHYLBENZENE | 7800 | ND | | ND | | ND | |
| | XYLENE (TOTAL) | 160000 | ND | | ND | | ND | |
| | METHYLENE CHLORIDE | 85 | | | | | | |
| | ACETONE | 7800 | | | | | | |
| BNA | NAPHTHALENE | 1600 | | | | | | |
| | ACENAPHTHENE | 4700 | | | | | | |
| | FLUORENE | 3100 | | | | | | |
| | PHENANTHRENE | 23000 | | | | | | |
| | ANTHRACENE | 23000 | | | | | | |
| | FLUORANTHENE | 3100 | | | | | | |
| | PYRENE | 2300 | | | | | | |
| | BENZO(A)ANTHRACENE | .87 | | | | | | |
| | BENZO(B)FLUORANTHENE | .87 | | | | | | |
| | CHRYSENE | 87 | | | | | | |
| | BENZO(K)FLUORANTHENE | 8.7 | | | | | | |

Notes:

* "> CAL" equals "X" when reported value is above characterization action level for this locale.
J flag - Numerical value is an estimated quantity.
ND indicates Non-Detect
Blank cells in result column indicate an analysis was not performed for that analyte.

Date generated: November 20, 2000

# Table 4-3
# Summary of Analytical Results

| | | | | | | | | |
|---|---|---|---|---|---|---|---|---|
| | | PRA | 6 | | | | | |
| | | PRA Description | DRIP UT | | | | | |
| | | Sample Type | Normal Sample | | | | | |
| | | Sample Id | BRK-FSB026-70001 | | BRK-FSB027-70001 | | BRK-FSS015-40001 | |
| | | Depth - ft bgs | 6 - 7 | | 7 - 8 | | 0 - 1 | |
| | | Collected Date | 06/15/00 | | 06/15/00 | | 06/15/00 | |
| | | Laboratory | Lancaster Laboratories | | Lancaster Laboratories | | Lancaster Laboratories | |
| | | Sample Collector | IT Corporation (Fluor Daniel/GTI | | IT Corporation (Fluor Daniel/GTI | | IT Corporation (Fluor Daniel/GTI | |
| | | Result Units | MG/KG | | MG/KG | | MG/KG | |
| Category | Analyte | Action Level | Result Flag | > CAL* | Result Flag | > CAL* | Result Flag | > CAL* |
| | BENZO(A)PYRENE | .087 | | | | | | |
| | DIBENZO(A,H)ANTHRACENE | .087 | | | | | | |
| | BENZO(G,H,I)PERYLENE | 2300 | | | | | | |
| | INDENO(1,2,3-CD)PYRENE | .87 | | | | | | |
| P/PCB | AROCLOR-1254 | 1 | ND | | ND | | ND | |
| METAL | BARIUM, TOTAL | 5500 | | | | | | |
| | BERYLLIUM, TOTAL | 160 | | | | | | |
| | CADMIUM, TOTAL | 39 | | | | | | |
| | CHROMIUM, TOTAL | 230 | | | | | | |
| | LEAD, TOTAL | 400 | | | | | | |
| | NICKEL, TOTAL | 1600 | | | | | | |
| | MERCURY, TOTAL | 20 | | | | | | |
| | ARSENIC, TOTAL | .43 | | | | | | |

Notes:

* "> CAL" equals "X" when reported value is above characterization action level for this locale.
J flag - Numerical value is an estimated quantity.
ND indicates Non-Detect
Blank cells in result column indicate an analysis was not performed for that analyte.

Date generated: November 20, 2000

# Table 4-3
## Summary of Analytical Results

| | | | | | | | | |
|---|---|---|---|---|---|---|---|---|
| | | PRA | 7 | | | | | |
| | | PRA Description | GLYCOL UT | | | | | |
| | | Sample Type | Normal Sample | | | | | |
| | | Sample Id | BRK-FSB028-70001 | | BRK-FSB029-70001 | | BRK-FSS016-40001 | |
| | | Depth - ft bgs | 7 - 8 | | 7 - 8 | | 0 - 1 | |
| | | Collected Date | 06/14/00 | | 06/14/00 | | 06/14/00 | |
| | | Laboratory | Lancaster Laboratories | | Lancaster Laboratories | | Lancaster Laboratories | |
| | | Sample Collector | IT Corporation (Fluor Daniel/GTI | | IT Corporation (Fluor Daniel/GTI | | IT Corporation (Fluor Daniel/GTI | |
| | | Result Units | MG/KG | | MG/KG | | MG/KG | |
| Category | Analyte | Action Level | Result Flag | > CAL* | Result Flag | > CAL* | Result Flag | > CAL* |
| VOA | BENZENE | 12 | ND | | ND | | ND | |
| | TOLUENE | 16000 | ND | | ND | | ND | |
| | ETHYLBENZENE | 7800 | ND | | ND | | ND | |
| | XYLENE (TOTAL) | 160000 | ND | | ND | | ND | |
| | METHYLENE CHLORIDE | 85 | | | | | | |
| | ACETONE | 7800 | | | | | | |
| BNA | NAPHTHALENE | 1600 | | | | | | |
| | ACENAPHTHENE | 4700 | | | | | | |
| | FLUORENE | 3100 | | | | | | |
| | PHENANTHRENE | 23000 | | | | | | |
| | ANTHRACENE | 23000 | | | | | | |
| | FLUORANTHENE | 3100 | | | | | | |
| | PYRENE | 2300 | | | | | | |
| | BENZO(A)ANTHRACENE | .87 | | | | | | |
| | BENZO(B)FLUORANTHENE | .87 | | | | | | |
| | CHRYSENE | 87 | | | | | | |
| | BENZO(K)FLUORANTHENE | 8.7 | | | | | | |

Notes:

* "> CAL" equals "X" when reported value is above characterization action level for this locale.
J flag - Numerical value is an estimated quantity.
ND indicates Non-Detect
Blank cells in result column indicate an analysis was not performed for that analyte.

Date generated: November 20, 2000

# Table 4-3
# Summary of Analytical Results

| | | | | | | | | |
|---|---|---|---|---|---|---|---|---|
| | | PRA | 7 | | | | | |
| | | PRA Description | GLYCOL UT | | | | | |
| | | Sample Type | Normal Sample | | | | | |
| | | Sample Id | BRK-FSB028-70001 | | BRK-FSB029-70001 | | BRK-FSS016-40001 | |
| | | Depth - ft bgs | 7 - 8 | | 7 - 8 | | 0 - 1 | |
| | | Collected Date | 06/14/00 | | 06/14/00 | | 06/14/00 | |
| | | Laboratory | Lancaster Laboratories | | Lancaster Laboratories | | Lancaster Laboratories | |
| | | Sample Collector | IT Corporation (Fluor Daniel/GTI | | IT Corporation (Fluor Daniel/GTI | | IT Corporation (Fluor Daniel/GTI | |
| | | Result Units | MG/KG | | MG/KG | | MG/KG | |
| Category | Analyte | Action Level | Result Flag | > CAL* | Result Flag | > CAL* | Result Flag | > CAL* |
| | BENZO(A)PYRENE | .087 | | | | | | |
| | DIBENZO(A,H)ANTHRACENE | .087 | | | | | | |
| | BENZO(G,H,I)PERYLENE | 2300 | | | | | | |
| | INDENO(1,2,3-CD)PYRENE | .87 | | | | | | |
| P/PCB | AROCLOR-1254 | 1 | ND | | ND | | 0.056 | |
| METAL | BARIUM, TOTAL | 5500 | | | | | | |
| | BERYLLIUM, TOTAL | 160 | | | | | | |
| | CADMIUM, TOTAL | 39 | | | | | | |
| | CHROMIUM, TOTAL | 230 | | | | | | |
| | LEAD, TOTAL | 400 | | | | | | |
| | NICKEL, TOTAL | 1600 | | | | | | |
| | MERCURY, TOTAL | 20 | | | | | | |
| | ARSENIC, TOTAL | .43 | 9.0 J | X | 8.6 J | X | 12.8 J | X |

Notes:

* "> CAL" equals "X" when reported value is above characterization action level for this locale.
J flag - Numerical value is an estimated quantity.
ND indicates Non-Detect
Blank cells in result column indicate an analysis was not performed for that analyte.

Date generated: November 20, 2000

# Table 4-3
# Summary of Analytical Results

| | | | | | | | | |
|---|---|---|---|---|---|---|---|---|
| | | PRA | 8 | | | | | |
| | | PRA Description | PIPELINE LIQUIDS UT | | | | | |
| | | Sample Type | Normal Sample | | | | | |
| | | Sample Id | BRK-FSB030-70001 | | BRK-FSB031-70001 | | BRK-FSS017-40001 | |
| | | Depth - ft bgs | 7 - 8 | | 7 - 8 | | 0 - 1 | |
| | | Collected Date | 06/15/00 | | 06/15/00 | | 06/15/00 | |
| | | Laboratory | Lancaster Laboratories | | Lancaster Laboratories | | Lancaster Laboratories | |
| | | Sample Collector | IT Corporation (Fluor Daniel/GTI | | IT Corporation (Fluor Daniel/GTI | | IT Corporation (Fluor Daniel/GTI | |
| | | Result Units | MG/KG | | MG/KG | | MG/KG | |
| Category | Analyte | Action Level | Result Flag | > CAL* | Result Flag | > CAL* | Result Flag | > CAL* |
| VOA | BENZENE | 12 | ND | | ND | | ND | |
| | TOLUENE | 16000 | ND | | ND | | ND | |
| | ETHYLBENZENE | 7800 | ND | | ND | | ND | |
| | XYLENE (TOTAL) | 160000 | ND | | ND | | ND | |
| | METHYLENE CHLORIDE | 85 | | | | | | |
| | ACETONE | 7800 | | | | | | |
| BNA | NAPHTHALENE | 1600 | ND | | ND | | ND | |
| | ACENAPHTHENE | 4700 | ND | | ND | | ND | |
| | FLUORENE | 3100 | ND | | ND | | ND | |
| | PHENANTHRENE | 23000 | ND | | ND | | 0.97 J | |
| | ANTHRACENE | 23000 | ND | | ND | | ND | |
| | FLUORANTHENE | 3100 | ND | | ND | | 2.6 J | |
| | PYRENE | 2300 | ND | | ND | | 2.2 J | |
| | BENZO(A)ANTHRACENE | .87 | ND | | ND | | 2.0 J | X |
| | BENZO(B)FLUORANTHENE | .87 | ND | | ND | | 1.9 J | X |
| | CHRYSENE | 87 | ND | | ND | | 1.8 J | |
| | BENZO(K)FLUORANTHENE | 8.7 | ND | | ND | | 0.75 J | |

Notes:

* "> CAL" equals "X" when reported value is above characterization action level for this locale.
J flag - Numerical value is an estimated quantity.
ND indicates Non-Detect
Blank cells in result column indicate an analysis was not performed for that analyte.

Date generated: November 20, 2000

# Table 4-3
## Summary of Analytical Results

| | | | | | | | | |
|---|---|---|---|---|---|---|---|---|
| | | PRA | 8 | | | | | |
| | | PRA Description | PIPELINE LIQUIDS UT | | | | | |
| | | Sample Type | Normal Sample | | | | | |
| | | Sample Id | BRK-FSB030-70001 | | BRK-FSB031-70001 | | BRK-FSS017-40001 | |
| | | Depth - ft bgs | 7 - 8 | | 7 - 8 | | 0 - 1 | |
| | | Collected Date | 06/15/00 | | 06/15/00 | | 06/15/00 | |
| | | Laboratory | Lancaster Laboratories | | Lancaster Laboratories | | Lancaster Laboratories | |
| | | Sample Collector | IT Corporation (Fluor Daniel/GTI | | IT Corporation (Fluor Daniel/GTI | | IT Corporation (Fluor Daniel/GTI | |
| | | Result Units | MG/KG | | MG/KG | | MG/KG | |
| Category | Analyte | Action Level | Result Flag | > CAL* | Result Flag | > CAL* | Result Flag | > CAL* |
| | BENZO(A)PYRENE | .087 | ND | | ND | | 1.5 J | X |
| | DIBENZO(A,H)ANTHRACENE | .087 | ND | | ND | | ND | |
| | BENZO(G,H,I)PERYLENE | 2300 | ND | | ND | | 0.69 J | |
| | INDENO(1,2,3-CD)PYRENE | .87 | ND | | ND | | 0.99 J | X |
| P/PCB | AROCLOR-1254 | 1 | ND | | ND | | ND | |
| METAL | BARIUM, TOTAL | 5500 | | | | | | |
| | BERYLLIUM, TOTAL | 160 | | | | | | |
| | CADMIUM, TOTAL | 39 | | | | | | |
| | CHROMIUM, TOTAL | 230 | | | | | | |
| | LEAD, TOTAL | 400 | | | | | | |
| | NICKEL, TOTAL | 1600 | | | | | | |
| | MERCURY, TOTAL | 20 | | | | | | |
| | ARSENIC, TOTAL | .43 | | | | | | |

Notes:

* "> CAL" equals "X" when reported value is above characterization action level for this locale.
J flag - Numerical value is an estimated quantity.
ND indicates Non-Detect
Blank cells in result column indicate an analysis was not performed for that analyte.

Date generated: November 20, 2000

# Table 4-3
## Summary of Analytical Results

| | | | | | | | | |
|---|---|---|---|---|---|---|---|---|
| | | PRA | 9 | | | | | |
| | | PRA Description | FORMER BURN AREA, TRASH AREA, DRUM ST. | | | | | |
| | | Sample Type | Normal Sample | | | | | |
| | | Sample Id | BRK-FCH015-80001 | | BRK-FSB032-70001 | | BRK-FSB032-70002 | |
| | | Depth - ft bgs | 0 - 0 | | 0 - 1 | | 2 - 2.5 | |
| | | Collected Date | 06/19/00 | | 06/13/00 | | 06/13/00 | |
| | | Laboratory | Lancaster Laboratories | | Lancaster Laboratories | | Lancaster Laboratories | |
| | | Sample Collector | IT Corporation (Fluor Daniel/GTI | | IT Corporation (Fluor Daniel/GTI | | IT Corporation (Fluor Daniel/GTI | |
| | | Result Units | MG/KG | | MG/KG | | MG/KG | |
| Category | Analyte | Action Level | Result Flag | > CAL* | Result Flag | > CAL* | Result Flag | > CAL* |
| VOA | BENZENE | 12 | | | ND | | ND | |
| | TOLUENE | 16000 | | | ND | | ND | |
| | ETHYLBENZENE | 7800 | | | ND | | ND | |
| | XYLENE (TOTAL) | 160000 | | | ND | | ND | |
| | METHYLENE CHLORIDE | 85 | | | 0.013 | | ND | |
| | ACETONE | 7800 | | | ND | | ND | |
| BNA | NAPHTHALENE | 1600 | | | ND | | ND | |
| | ACENAPHTHENE | 4700 | | | ND | | ND | |
| | FLUORENE | 3100 | | | ND | | ND | |
| | PHENANTHRENE | 23000 | | | ND | | ND | |
| | ANTHRACENE | 23000 | | | ND | | ND | |
| | FLUORANTHENE | 3100 | | | ND | | ND | |
| | PYRENE | 2300 | | | ND | | ND | |
| | BENZO(A)ANTHRACENE | .87 | | | ND | | ND | |
| | BENZO(B)FLUORANTHENE | .87 | | | ND | | ND | |
| | CHRYSENE | 87 | | | ND | | ND | |
| | BENZO(K)FLUORANTHENE | 8.7 | | | ND | | ND | |

Notes:

* "> CAL" equals "X" when reported value is above characterization action level for this locale.
J flag - Numerical value is an estimated quantity.
ND indicates Non-Detect
Blank cells in result column indicate an analysis was not performed for that analyte.

Date generated: November 20, 2000

# Table 4-3
## Summary of Analytical Results

| | | | | | | | | |
|---|---|---|---|---|---|---|---|---|
| | | PRA | 9 | | | | | |
| | | PRA Description | FORMER BURN AREA, TRASH AREA, DRUM ST. | | | | | |
| | | Sample Type | Normal Sample | | | | | |
| | | Sample Id | BRK-FCH015-80001 | | BRK-FSB032-70001 | | BRK-FSB032-70002 | |
| | | Depth - ft bgs | 0 - 0 | | 0 - 1 | | 2 - 2.5 | |
| | | Collected Date | 06/19/00 | | 06/13/00 | | 06/13/00 | |
| | | Laboratory | Lancaster Laboratories | | Lancaster Laboratories | | Lancaster Laboratories | |
| | | Sample Collector | IT Corporation (Fluor Daniel/GTI | | IT Corporation (Fluor Daniel/GTI | | IT Corporation (Fluor Daniel/GTI | |
| | | Result Units | MG/KG | | MG/KG | | MG/KG | |
| Category | Analyte | Action Level | Result Flag | > CAL* | Result Flag | > CAL* | Result Flag | > CAL* |
| | BENZO(A)PYRENE | .087 | | | ND | | ND | |
| | DIBENZO(A,H)ANTHRACENE | .087 | | | ND | | ND | |
| | BENZO(G,H,I)PERYLENE | 2300 | | | ND | | ND | |
| | INDENO(1,2,3-CD)PYRENE | .87 | | | ND | | ND | |
| P/PCB | AROCLOR-1254 | 1 | ND | | ND | | ND | |
| METAL | BARIUM, TOTAL | 5500 | | | 89.6 | | 47.8 | |
| | BERYLLIUM, TOTAL | 160 | | | ND | | ND | |
| | CADMIUM, TOTAL | 39 | | | ND | | ND | |
| | CHROMIUM, TOTAL | 230 | | | 19.0 | | 16.2 | |
| | LEAD, TOTAL | 400 | | | ND | | ND | |
| | NICKEL, TOTAL | 1600 | | | 16.9 | | 13.5 | |
| | MERCURY, TOTAL | 20 | | | ND | | ND | |
| | ARSENIC, TOTAL | .43 | | | 11.8 | X | 17.4 | X |

Notes:

* "> CAL" equals "X" when reported value is above characterization action level for this locale.
J flag - Numerical value is an estimated quantity.
ND indicates Non-Detect
Blank cells in result column indicate an analysis was not performed for that analyte.

Date generated: November 20, 2000

# Table 4-3
# Summary of Analytical Results

| | | | | | | | | |
|---|---|---|---|---|---|---|---|---|
| | | PRA | | | | | | |
| | | PRA Description | | | | | | |
| | | Sample Type | | | | | | |
| | | Sample Id | **BRK-FSB032-70003** | | **BRK-FSB033-70001** | | **BRK-FSB033-70002** | |
| | | Depth - ft bgs | **3.5 - 4** | | **0 - 1** | | **2 - 2.5** | |
| | | Collected Date | **06/13/00** | | **06/13/00** | | **06/13/00** | |
| | | Laboratory | **Lancaster Laboratories** | | **Lancaster Laboratories** | | **Lancaster Laboratories** | |
| | | Sample Collector | **IT Corporation (Fluor Daniel/GTI** | | **IT Corporation (Fluor Daniel/GTI** | | **IT Corporation (Fluor Daniel/GTI** | |
| | | Result Units | **MG/KG** | | **MG/KG** | | **MG/KG** | |
| Category | Analyte | Action Level | **Result Flag** | **> CAL*** | **Result Flag** | **> CAL*** | **Result Flag** | **> CAL*** |
| **VOA** | **BENZENE** | 12 | ND | | ND | | ND | |
| | **TOLUENE** | 16000 | ND | | ND | | ND | |
| | **ETHYLBENZENE** | 7800 | ND | | ND | | ND | |
| | **XYLENE (TOTAL)** | 160000 | ND | | ND | | ND | |
| | **METHYLENE CHLORIDE** | 85 | ND | | 0.007 | | ND | |
| | **ACETONE** | 7800 | ND | | ND | | ND | |
| **BNA** | **NAPHTHALENE** | 1600 | ND | | ND | | ND | |
| | **ACENAPHTHENE** | 4700 | ND | | ND | | ND | |
| | **FLUORENE** | 3100 | ND | | ND | | ND | |
| | **PHENANTHRENE** | 23000 | ND | | ND | | ND | |
| | **ANTHRACENE** | 23000 | ND | | ND | | ND | |
| | **FLUORANTHENE** | 3100 | ND | | ND | | ND | |
| | **PYRENE** | 2300 | ND | | ND | | ND | |
| | **BENZO(A)ANTHRACENE** | .87 | ND | | ND | | ND | |
| | **BENZO(B)FLUORANTHENE** | .87 | ND | | ND | | ND | |
| | **CHRYSENE** | 87 | ND | | ND | | ND | |
| | **BENZO(K)FLUORANTHENE** | 8.7 | ND | | ND | | ND | |

Notes:

* "> CAL" equals "X" when reported value is above characterization action level for this locale.
J flag - Numerical value is an estimated quantity.
ND indicates Non-Detect
Blank cells in result column indicate an analysis was not performed for that analyte.

Date generated: November 20, 2000

# Table 4-3
# Summary of Analytical Results

| | | | | | | | | |
|---|---|---|---|---|---|---|---|---|
| | | PRA | | | | | | |
| | | PRA Description | | | | | | |
| | | Sample Type | | | | | | |
| | | Sample Id | **BRK-FSB032-70003** | | **BRK-FSB033-70001** | | **BRK-FSB033-70002** | |
| | | Depth - ft bgs | **3.5 - 4** | | **0 - 1** | | **2 - 2.5** | |
| | | Collected Date | **06/13/00** | | **06/13/00** | | **06/13/00** | |
| | | Laboratory | **Lancaster Laboratories** | | **Lancaster Laboratories** | | **Lancaster Laboratories** | |
| | | Sample Collector | **IT Corporation (Fluor Daniel/GTI** | | **IT Corporation (Fluor Daniel/GTI** | | **IT Corporation (Fluor Daniel/GTI** | |
| | | Result Units | **MG/KG** | | **MG/KG** | | **MG/KG** | |
| Category | Analyte | Action Level | **Result Flag** | **> CAL*** | **Result Flag** | **> CAL*** | **Result Flag** | **> CAL*** |
| | **BENZO(A)PYRENE** | .087 | ND | | ND | | ND | |
| | **DIBENZO(A,H)ANTHRACENE** | .087 | ND | | ND | | ND | |
| | **BENZO(G,H,I)PERYLENE** | 2300 | ND | | ND | | ND | |
| | **INDENO(1,2,3-CD)PYRENE** | .87 | ND | | ND | | ND | |
| **P/PCB** | **AROCLOR-1254** | 1 | ND | | ND | | ND | |
| **METAL** | **BARIUM, TOTAL** | 5500 | 69.9 | | 29.3 | | 58.3 | |
| | **BERYLLIUM, TOTAL** | 160 | ND | | ND | | ND | |
| | **CADMIUM, TOTAL** | 39 | ND | | ND | | ND | |
| | **CHROMIUM, TOTAL** | 230 | 11.4 | | 11.8 | | 11.2 | |
| | **LEAD, TOTAL** | 400 | ND | | ND | | ND | |
| | **NICKEL, TOTAL** | 1600 | 26.1 | | ND | | 23.8 | |
| | **MERCURY, TOTAL** | 20 | ND | | ND | | ND | |
| | **ARSENIC, TOTAL** | .43 | 10.9 | X | 11.1 | X | 11.1 | X |

Notes:

* "> CAL" equals "X" when reported value is above characterization action level for this locale.
J flag - Numerical value is an estimated quantity.
ND indicates Non-Detect
Blank cells in result column indicate an analysis was not performed for that analyte.

Date generated: November 20, 2000

# Table 4-3
# Summary of Analytical Results

| | | | | | | | | |
|---|---|---|---|---|---|---|---|---|
| | | PRA | | | | | | |
| | | PRA Description | | | | | | |
| | | Sample Type | | | | | | |
| | | Sample Id | **BRK-FSB033-70003** | | **BRK-FSB034-70001** | | **BRK-FSB034-70002** | |
| | | Depth - ft bgs | **3.5 - 4** | | **0 - 1** | | **2 - 2.5** | |
| | | Collected Date | **06/13/00** | | **06/13/00** | | **06/13/00** | |
| | | Laboratory | **Lancaster Laboratories** | | **Lancaster Laboratories** | | **Lancaster Laboratories** | |
| | | Sample Collector | **IT Corporation (Fluor Daniel/GTI** | | **IT Corporation (Fluor Daniel/GTI** | | **IT Corporation (Fluor Daniel/GTI** | |
| | | Result Units | **MG/KG** | | **MG/KG** | | **MG/KG** | |
| Category | Analyte | Action Level | **Result Flag** | **> CAL*** | **Result Flag** | **> CAL*** | **Result Flag** | **> CAL*** |
| **VOA** | **BENZENE** | 12 | ND | | ND | | ND | |
| | **TOLUENE** | 16000 | ND | | ND | | ND | |
| | **ETHYLBENZENE** | 7800 | ND | | ND | | ND | |
| | **XYLENE (TOTAL)** | 160000 | ND | | ND | | ND | |
| | **METHYLENE CHLORIDE** | 85 | 0.006 J | | 0.014 | | ND | |
| | **ACETONE** | 7800 | ND | | ND | | ND | |
| **BNA** | **NAPHTHALENE** | 1600 | ND | | ND | | ND | |
| | **ACENAPHTHENE** | 4700 | ND | | ND | | ND | |
| | **FLUORENE** | 3100 | ND | | ND | | ND | |
| | **PHENANTHRENE** | 23000 | ND | | ND | | ND | |
| | **ANTHRACENE** | 23000 | ND | | ND | | ND | |
| | **FLUORANTHENE** | 3100 | ND | | ND | | ND | |
| | **PYRENE** | 2300 | ND | | ND | | ND | |
| | **BENZO(A)ANTHRACENE** | .87 | ND | | ND | | ND | |
| | **BENZO(B)FLUORANTHENE** | .87 | ND | | ND | | ND | |
| | **CHRYSENE** | 87 | ND | | ND | | ND | |
| | **BENZO(K)FLUORANTHENE** | 8.7 | ND | | ND | | ND | |

Notes:

* "> CAL" equals "X" when reported value is above characterization action level for this locale.
J flag - Numerical value is an estimated quantity.
ND indicates Non-Detect
Blank cells in result column indicate an analysis was not performed for that analyte.

Date generated: November 20, 2000

# Table 4-3
# Summary of Analytical Results

| | | | | | | | | |
|---|---|---|---|---|---|---|---|---|
| | | PRA | | | | | | |
| | | PRA Description | | | | | | |
| | | Sample Type | | | | | | |
| | | Sample Id | **BRK-FSB033-70003** | | **BRK-FSB034-70001** | | **BRK-FSB034-70002** | |
| | | Depth - ft bgs | **3.5 - 4** | | **0 - 1** | | **2 - 2.5** | |
| | | Collected Date | **06/13/00** | | **06/13/00** | | **06/13/00** | |
| | | Laboratory | **Lancaster Laboratories** | | **Lancaster Laboratories** | | **Lancaster Laboratories** | |
| | | Sample Collector | **IT Corporation (Fluor Daniel/GTI** | | **IT Corporation (Fluor Daniel/GTI** | | **IT Corporation (Fluor Daniel/GTI** | |
| | | Result Units | **MG/KG** | | **MG/KG** | | **MG/KG** | |
| Category | Analyte | Action Level | **Result Flag** | **> CAL*** | **Result Flag** | **> CAL*** | **Result Flag** | **> CAL*** |
| | **BENZO(A)PYRENE** | .087 | ND | | ND | | ND | |
| | **DIBENZO(A,H)ANTHRACENE** | .087 | ND | | ND | | ND | |
| | **BENZO(G,H,I)PERYLENE** | 2300 | ND | | ND | | ND | |
| | **INDENO(1,2,3-CD)PYRENE** | .87 | ND | | ND | | ND | |
| **P/PCB** | **AROCLOR-1254** | 1 | ND | | ND | | ND | |
| **METAL** | **BARIUM, TOTAL** | 5500 | 73.3 | | 97.3 | | 40.8 | |
| | **BERYLLIUM, TOTAL** | 160 | ND | | ND | | ND | |
| | **CADMIUM, TOTAL** | 39 | ND | | 1.5 | | ND | |
| | **CHROMIUM, TOTAL** | 230 | 11.9 | | 23.0 | | 20.5 | |
| | **LEAD, TOTAL** | 400 | ND | | 43.5 | | ND | |
| | **NICKEL, TOTAL** | 1600 | 22.8 | | 18.6 | | 22.2 | |
| | **MERCURY, TOTAL** | 20 | ND | | ND | | ND | |
| | **ARSENIC, TOTAL** | .43 | 10.5 | X | 46.8 | X | 21.0 | X |

Notes:

* "> CAL" equals "X" when reported value is above characterization action level for this locale.
J flag - Numerical value is an estimated quantity.
ND indicates Non-Detect
Blank cells in result column indicate an analysis was not performed for that analyte.

Date generated: November 20, 2000

# Table 4-3
# Summary of Analytical Results

| | | | | | | | | |
|---|---|---|---|---|---|---|---|---|
| | | PRA | | | | | | |
| | | PRA Description | | | | | | |
| | | Sample Type | | | | | | |
| | | Sample Id | **BRK-FSB034-70003** | | **BRK-FSB035-70001** | | **BRK-FSB035-70002** | |
| | | Depth - ft bgs | **3.5 - 4** | | **0 - 1** | | **2 - 2.5** | |
| | | Collected Date | **06/13/00** | | **06/13/00** | | **06/13/00** | |
| | | Laboratory | **Lancaster Laboratories** | | **Lancaster Laboratories** | | **Lancaster Laboratories** | |
| | | Sample Collector | **IT Corporation (Fluor Daniel/GTI** | | **IT Corporation (Fluor Daniel/GTI** | | **IT Corporation (Fluor Daniel/GTI** | |
| | | Result Units | **MG/KG** | | **MG/KG** | | **MG/KG** | |
| Category | Analyte | Action Level | **Result Flag** | **> CAL*** | **Result Flag** | **> CAL*** | **Result Flag** | **> CAL*** |
| **VOA** | **BENZENE** | 12 | ND | | ND | | ND | |
| | **TOLUENE** | 16000 | ND | | ND | | ND | |
| | **ETHYLBENZENE** | 7800 | ND | | ND | | ND | |
| | **XYLENE (TOTAL)** | 160000 | ND | | ND | | ND | |
| | **METHYLENE CHLORIDE** | 85 | 0.006 | | ND | | ND | |
| | **ACETONE** | 7800 | ND | | ND | | ND | |
| **BNA** | **NAPHTHALENE** | 1600 | ND | | ND | | ND | |
| | **ACENAPHTHENE** | 4700 | ND | | ND | | ND | |
| | **FLUORENE** | 3100 | ND | | ND | | ND | |
| | **PHENANTHRENE** | 23000 | ND | | ND | | ND | |
| | **ANTHRACENE** | 23000 | ND | | ND | | ND | |
| | **FLUORANTHENE** | 3100 | ND | | ND | | ND | |
| | **PYRENE** | 2300 | ND | | ND | | ND | |
| | **BENZO(A)ANTHRACENE** | .87 | ND | | ND | | ND | |
| | **BENZO(B)FLUORANTHENE** | .87 | ND | | ND | | ND | |
| | **CHRYSENE** | 87 | ND | | ND | | ND | |
| | **BENZO(K)FLUORANTHENE** | 8.7 | ND | | ND | | ND | |

Notes:

* "> CAL" equals "X" when reported value is above characterization action level for this locale.
J flag - Numerical value is an estimated quantity.
ND indicates Non-Detect
Blank cells in result column indicate an analysis was not performed for that analyte.

Date generated: November 20, 2000

# Table 4-3
# Summary of Analytical Results

| | | | | | | | | |
|---|---|---|---|---|---|---|---|---|
| | | PRA | | | | | | |
| | | PRA Description | | | | | | |
| | | Sample Type | | | | | | |
| | | Sample Id | **BRK-FSB034-70003** | | **BRK-FSB035-70001** | | **BRK-FSB035-70002** | |
| | | Depth - ft bgs | **3.5 - 4** | | **0 - 1** | | **2 - 2.5** | |
| | | Collected Date | **06/13/00** | | **06/13/00** | | **06/13/00** | |
| | | Laboratory | **Lancaster Laboratories** | | **Lancaster Laboratories** | | **Lancaster Laboratories** | |
| | | Sample Collector | **IT Corporation (Fluor Daniel/GTI** | | **IT Corporation (Fluor Daniel/GTI** | | **IT Corporation (Fluor Daniel/GTI** | |
| | | Result Units | **MG/KG** | | **MG/KG** | | **MG/KG** | |
| Category | Analyte | Action Level | **Result Flag** | **> CAL*** | **Result Flag** | **> CAL*** | **Result Flag** | **> CAL*** |
| | **BENZO(A)PYRENE** | .087 | ND | | ND | | ND | |
| | **DIBENZO(A,H)ANTHRACENE** | .087 | ND | | ND | | ND | |
| | **BENZO(G,H,I)PERYLENE** | 2300 | ND | | ND | | ND | |
| | **INDENO(1,2,3-CD)PYRENE** | .87 | ND | | ND | | ND | |
| **P/PCB** | **AROCLOR-1254** | 1 | ND | | ND | | ND | |
| **METAL** | **BARIUM, TOTAL** | 5500 | 37.5 | | 61.3 | | 40.5 | |
| | **BERYLLIUM, TOTAL** | 160 | ND | | ND | | ND | |
| | **CADMIUM, TOTAL** | 39 | ND | | ND | | ND | |
| | **CHROMIUM, TOTAL** | 230 | 14.2 | | 15.2 | | 19.1 | |
| | **LEAD, TOTAL** | 400 | ND | | ND | | ND | |
| | **NICKEL, TOTAL** | 1600 | 16.4 | | ND | | 18.9 | |
| | **MERCURY, TOTAL** | 20 | ND | | ND | | ND | |
| | **ARSENIC, TOTAL** | .43 | 12.3 | X | 8.6 | X | 18.2 | X |

Notes:

* "> CAL" equals "X" when reported value is above characterization action level for this locale.
J flag - Numerical value is an estimated quantity.
ND indicates Non-Detect
Blank cells in result column indicate an analysis was not performed for that analyte.

Date generated: November 20, 2000

# Table 4-3
# Summary of Analytical Results

| | | | | | | | | |
|---|---|---|---|---|---|---|---|---|
| | | PRA | | | | | | |
| | | PRA Description | | | | | | |
| | | Sample Type | | | | | | |
| | | Sample Id | **BRK-FSB035-70003** | | **BRK-FSB036-70001** | | **BRK-FSB036-70002** | |
| | | Depth - ft bgs | **3.5 - 4** | | **0 - 1** | | **2 - 2.5** | |
| | | Collected Date | **06/13/00** | | **06/13/00** | | **06/13/00** | |
| | | Laboratory | **Lancaster Laboratories** | | **Lancaster Laboratories** | | **Lancaster Laboratories** | |
| | | Sample Collector | **IT Corporation (Fluor Daniel/GTI** | | **IT Corporation (Fluor Daniel/GTI** | | **IT Corporation (Fluor Daniel/GTI** | |
| | | Result Units | **MG/KG** | | **MG/KG** | | **MG/KG** | |
| Category | Analyte | Action Level | **Result Flag** | **> CAL*** | **Result Flag** | **> CAL*** | **Result Flag** | **> CAL*** |
| **VOA** | **BENZENE** | 12 | ND | | ND | | ND | |
| | **TOLUENE** | 16000 | ND | | ND | | ND | |
| | **ETHYLBENZENE** | 7800 | ND | | ND | | ND | |
| | **XYLENE (TOTAL)** | 160000 | ND | | ND | | ND | |
| | **METHYLENE CHLORIDE** | 85 | 0.012 | | 0.011 | | 0.007 | |
| | **ACETONE** | 7800 | ND | | ND | | ND | |
| **BNA** | **NAPHTHALENE** | 1600 | ND | | ND | | ND | |
| | **ACENAPHTHENE** | 4700 | ND | | ND | | ND | |
| | **FLUORENE** | 3100 | ND | | ND | | ND | |
| | **PHENANTHRENE** | 23000 | ND | | ND | | ND | |
| | **ANTHRACENE** | 23000 | ND | | ND | | ND | |
| | **FLUORANTHENE** | 3100 | ND | | ND | | ND | |
| | **PYRENE** | 2300 | ND | | ND | | ND | |
| | **BENZO(A)ANTHRACENE** | .87 | ND | | ND | | ND | |
| | **BENZO(B)FLUORANTHENE** | .87 | ND | | ND | | ND | |
| | **CHRYSENE** | 87 | ND | | ND | | ND | |
| | **BENZO(K)FLUORANTHENE** | 8.7 | ND | | ND | | ND | |

Notes:

* "> CAL" equals "X" when reported value is above characterization action level for this locale.
J flag - Numerical value is an estimated quantity.
ND indicates Non-Detect
Blank cells in result column indicate an analysis was not performed for that analyte.

Date generated: November 20, 2000

# Table 4-3
# Summary of Analytical Results

| | | | | | | | | |
|---|---|---|---|---|---|---|---|---|
| | | PRA | | | | | | |
| | | PRA Description | | | | | | |
| | | Sample Type | | | | | | |
| | | Sample Id | **BRK-FSB035-70003** | | **BRK-FSB036-70001** | | **BRK-FSB036-70002** | |
| | | Depth - ft bgs | **3.5 - 4** | | **0 - 1** | | **2 - 2.5** | |
| | | Collected Date | **06/13/00** | | **06/13/00** | | **06/13/00** | |
| | | Laboratory | **Lancaster Laboratories** | | **Lancaster Laboratories** | | **Lancaster Laboratories** | |
| | | Sample Collector | **IT Corporation (Fluor Daniel/GTI** | | **IT Corporation (Fluor Daniel/GTI** | | **IT Corporation (Fluor Daniel/GTI** | |
| | | Result Units | **MG/KG** | | **MG/KG** | | **MG/KG** | |
| Category | Analyte | Action Level | **Result Flag** | **> CAL*** | **Result Flag** | **> CAL*** | **Result Flag** | **> CAL*** |
| | **BENZO(A)PYRENE** | .087 | ND | | ND | | ND | |
| | **DIBENZO(A,H)ANTHRACENE** | .087 | ND | | ND | | ND | |
| | **BENZO(G,H,I)PERYLENE** | 2300 | ND | | ND | | ND | |
| | **INDENO(1,2,3-CD)PYRENE** | .87 | ND | | ND | | ND | |
| **P/PCB** | **AROCLOR-1254** | 1 | ND | | ND | | ND | |
| **METAL** | **BARIUM, TOTAL** | 5500 | 67.3 | | 60.8 | | 62.0 | |
| | **BERYLLIUM, TOTAL** | 160 | ND | | ND | | ND | |
| | **CADMIUM, TOTAL** | 39 | ND | | ND | | ND | |
| | **CHROMIUM, TOTAL** | 230 | 12.1 | | 15.3 | | 22.8 | |
| | **LEAD, TOTAL** | 400 | ND | | ND | | ND | |
| | **NICKEL, TOTAL** | 1600 | 25.4 | | 13.8 | | 14.6 | |
| | **MERCURY, TOTAL** | 20 | ND | | ND | | ND | |
| | **ARSENIC, TOTAL** | .43 | 14.0 | X | 14.4 | X | 14.0 | X |

Notes:

* "> CAL" equals "X" when reported value is above characterization action level for this locale.
J flag - Numerical value is an estimated quantity.
ND indicates Non-Detect
Blank cells in result column indicate an analysis was not performed for that analyte.

Date generated: November 20, 2000

# Table 4-3
# Summary of Analytical Results

| | | | | | | | | |
|---|---|---|---|---|---|---|---|---|
| | | PRA | | | 10 | | | |
| | | PRA Description | | | SEPTIC SYSTEM | | | |
| | | Sample Type | | | Normal Sample | | | |
| | | Sample Id | BRK-FSB036-70003 | | BRK-FSB037-70001 | | BRK-FSB038-70001 | |
| | | Depth - ft bgs | 3.5 - 4 | | 3.5 - 4 | | 3.5 - 4 | |
| | | Collected Date | 06/13/00 | | 06/13/00 | | 06/13/00 | |
| | | Laboratory | Lancaster Laboratories | | Lancaster Laboratories | | Lancaster Laboratories | |
| | | Sample Collector | IT Corporation (Fluor Daniel/GTI | | IT Corporation (Fluor Daniel/GTI | | IT Corporation (Fluor Daniel/GTI | |
| | | Result Units | MG/KG | | MG/KG | | MG/KG | |
| Category | Analyte | Action Level | Result Flag | > CAL* | Result Flag | > CAL* | Result Flag | > CAL* |
| VOA | BENZENE | 12 | ND | | ND | | ND | |
| | TOLUENE | 16000 | ND | | ND | | ND | |
| | ETHYLBENZENE | 7800 | ND | | ND | | ND | |
| | XYLENE (TOTAL) | 160000 | ND | | ND | | ND | |
| | METHYLENE CHLORIDE | 85 | 0.012 | | ND | | ND | |
| | ACETONE | 7800 | ND | | ND | | ND | |
| BNA | NAPHTHALENE | 1600 | ND | | ND | | ND | |
| | ACENAPHTHENE | 4700 | ND | | ND | | ND | |
| | FLUORENE | 3100 | ND | | ND | | ND | |
| | PHENANTHRENE | 23000 | ND | | ND | | ND | |
| | ANTHRACENE | 23000 | ND | | ND | | ND | |
| | FLUORANTHENE | 3100 | ND | | ND | | ND | |
| | PYRENE | 2300 | ND | | ND | | ND | |
| | BENZO(A)ANTHRACENE | .87 | ND | | ND | | ND | |
| | BENZO(B)FLUORANTHENE | .87 | ND | | ND | | ND | |
| | CHRYSENE | 87 | ND | | ND | | ND | |
| | BENZO(K)FLUORANTHENE | 8.7 | ND | | ND | | ND | |

Notes:

* "> CAL" equals "X" when reported value is above characterization action level for this locale.
J flag - Numerical value is an estimated quantity.
ND indicates Non-Detect
Blank cells in result column indicate an analysis was not performed for that analyte.

Date generated: November 20, 2000

# Table 4-3
# Summary of Analytical Results

| | | | | | | | | |
|---|---|---|---|---|---|---|---|---|
| | | PRA | | | 10 | | | |
| | | PRA Description | | | SEPTIC SYSTEM | | | |
| | | Sample Type | | | Normal Sample | | | |
| | | Sample Id | BRK-FSB036-70003 | | BRK-FSB037-70001 | | BRK-FSB038-70001 | |
| | | Depth - ft bgs | 3.5 - 4 | | 3.5 - 4 | | 3.5 - 4 | |
| | | Collected Date | 06/13/00 | | 06/13/00 | | 06/13/00 | |
| | | Laboratory | Lancaster Laboratories | | Lancaster Laboratories | | Lancaster Laboratories | |
| | | Sample Collector | IT Corporation (Fluor Daniel/GTI | | IT Corporation (Fluor Daniel/GTI | | IT Corporation (Fluor Daniel/GTI | |
| | | Result Units | MG/KG | | MG/KG | | MG/KG | |
| Category | Analyte | Action Level | Result Flag | > CAL* | Result Flag | > CAL* | Result Flag | > CAL* |
| | BENZO(A)PYRENE | .087 | ND | | ND | | ND | |
| | DIBENZO(A,H)ANTHRACENE | .087 | ND | | ND | | ND | |
| | BENZO(G,H,I)PERYLENE | 2300 | ND | | ND | | ND | |
| | INDENO(1,2,3-CD)PYRENE | .87 | ND | | ND | | ND | |
| P/PCB | AROCLOR-1254 | 1 | ND | | ND | | ND | |
| METAL | BARIUM, TOTAL | 5500 | 41.7 | | 42.9 | | 37.0 | |
| | BERYLLIUM, TOTAL | 160 | ND | | ND | | ND | |
| | CADMIUM, TOTAL | 39 | ND | | ND | | ND | |
| | CHROMIUM, TOTAL | 230 | 14.5 | | 13.7 | | 13.8 | |
| | LEAD, TOTAL | 400 | ND | | ND | | ND | |
| | NICKEL, TOTAL | 1600 | 17.7 | | 19.4 | | 17.2 | |
| | MERCURY, TOTAL | 20 | ND | | ND | | ND | |
| | ARSENIC, TOTAL | .43 | 10.4 | X | 18.6 | X | 13.8 | X |

Notes:

* "> CAL" equals "X" when reported value is above characterization action level for this locale.
J flag - Numerical value is an estimated quantity.
ND indicates Non-Detect
Blank cells in result column indicate an analysis was not performed for that analyte.

Date generated: November 20, 2000

# Table 4-3
# Summary of Analytical Results

| | | | | | | | | |
|---|---|---|---|---|---|---|---|---|
| | | PRA | | | | | | |
| | | PRA Description | | | | | | |
| | | Sample Type | | | | | | |
| | | Sample Id | **BRK-FSB039-70001** | | **BRK-FSB040-70001** | | **BRK-FSB041-70001** | |
| | | Depth - ft bgs | **3.5 - 4** | | **3.5 - 4** | | **3.5 - 4** | |
| | | Collected Date | **06/13/00** | | **06/13/00** | | **06/13/00** | |
| | | Laboratory | **Lancaster Laboratories** | | **Lancaster Laboratories** | | **Lancaster Laboratories** | |
| | | Sample Collector | **IT Corporation (Fluor Daniel/GTI** | | **IT Corporation (Fluor Daniel/GTI** | | **IT Corporation (Fluor Daniel/GTI** | |
| | | Result Units | **MG/KG** | | **MG/KG** | | **MG/KG** | |
| Category | Analyte | Action Level | **Result Flag** | **> CAL*** | **Result Flag** | **> CAL*** | **Result Flag** | **> CAL*** |
| **VOA** | **BENZENE** | 12 | ND | | ND | | ND | |
| | **TOLUENE** | 16000 | ND | | ND | | ND | |
| | **ETHYLBENZENE** | 7800 | ND | | ND | | ND | |
| | **XYLENE (TOTAL)** | 160000 | ND | | ND | | ND | |
| | **METHYLENE CHLORIDE** | 85 | ND | | 0.008 | | 0.008 | |
| | **ACETONE** | 7800 | ND | | ND | | ND | |
| **BNA** | **NAPHTHALENE** | 1600 | ND | | ND | | ND | |
| | **ACENAPHTHENE** | 4700 | ND | | ND | | ND | |
| | **FLUORENE** | 3100 | ND | | ND | | ND | |
| | **PHENANTHRENE** | 23000 | ND | | ND | | ND | |
| | **ANTHRACENE** | 23000 | ND | | ND | | ND | |
| | **FLUORANTHENE** | 3100 | ND | | ND | | ND | |
| | **PYRENE** | 2300 | ND | | ND | | ND | |
| | **BENZO(A)ANTHRACENE** | .87 | ND | | ND | | ND | |
| | **BENZO(B)FLUORANTHENE** | .87 | ND | | ND | | ND | |
| | **CHRYSENE** | 87 | ND | | ND | | ND | |
| | **BENZO(K)FLUORANTHENE** | 8.7 | ND | | ND | | ND | |

Notes:

* "> CAL" equals "X" when reported value is above characterization action level for this locale.
J flag - Numerical value is an estimated quantity.
ND indicates Non-Detect
Blank cells in result column indicate an analysis was not performed for that analyte.

Date generated: November 20, 2000

# Table 4-3
# Summary of Analytical Results

| | | | | | | | | |
|---|---|---|---|---|---|---|---|---|
| | | PRA | | | | | | |
| | | PRA Description | | | | | | |
| | | Sample Type | | | | | | |
| | | Sample Id | **BRK-FSB039-70001** | | **BRK-FSB040-70001** | | **BRK-FSB041-70001** | |
| | | Depth - ft bgs | **3.5 - 4** | | **3.5 - 4** | | **3.5 - 4** | |
| | | Collected Date | **06/13/00** | | **06/13/00** | | **06/13/00** | |
| | | Laboratory | **Lancaster Laboratories** | | **Lancaster Laboratories** | | **Lancaster Laboratories** | |
| | | Sample Collector | **IT Corporation (Fluor Daniel/GTI** | | **IT Corporation (Fluor Daniel/GTI** | | **IT Corporation (Fluor Daniel/GTI** | |
| | | Result Units | **MG/KG** | | **MG/KG** | | **MG/KG** | |
| Category | Analyte | Action Level | **Result Flag** | **> CAL*** | **Result Flag** | **> CAL*** | **Result Flag** | **> CAL*** |
| | **BENZO(A)PYRENE** | .087 | ND | | ND | | ND | |
| | **DIBENZO(A,H)ANTHRACENE** | .087 | ND | | ND | | ND | |
| | **BENZO(G,H,I)PERYLENE** | 2300 | ND | | ND | | ND | |
| | **INDENO(1,2,3-CD)PYRENE** | .87 | ND | | ND | | ND | |
| **P/PCB** | **AROCLOR-1254** | 1 | ND | | ND | | ND | |
| **METAL** | **BARIUM, TOTAL** | 5500 | 42.5 | | 77.8 | | 71.6 | |
| | **BERYLLIUM, TOTAL** | 160 | ND | | ND | | ND | |
| | **CADMIUM, TOTAL** | 39 | ND | | ND | | ND | |
| | **CHROMIUM, TOTAL** | 230 | 12.3 | | 15.4 | | 12.8 | |
| | **LEAD, TOTAL** | 400 | ND | | ND | | ND | |
| | **NICKEL, TOTAL** | 1600 | 15.2 | | 31.1 | | 25.0 | |
| | **MERCURY, TOTAL** | 20 | ND | | ND | | ND | |
| | **ARSENIC, TOTAL** | .43 | 12.8 | X | 12.0 | X | 13.8 | X |

Notes:

* "> CAL" equals "X" when reported value is above characterization action level for this locale.
J flag - Numerical value is an estimated quantity.
ND indicates Non-Detect
Blank cells in result column indicate an analysis was not performed for that analyte.

Date generated: November 20, 2000

# Table 4-3
## Summary of Analytical Results

| | | | | | | | | |
|---|---|---|---|---|---|---|---|---|
| | | PRA | 11 | | | | 12 | |
| | | PRA Description | COUNTY ROADSIDE DITCH | | | | STATION BLOWDOWN VENTS | |
| | | Sample Type | Field Duplicate (Rep) | | Normal Sample | | Normal Sample | |
| | | Sample Id | BRK-FSD001-31001 | | BRK-FSD001-30001 | | BRK-FSS018-40001 | |
| | | Depth - ft bgs | 0 - 1 | | 0 - 1 | | 0 - 0.5 | |
| | | Collected Date | 06/15/00 | | 06/15/00 | | 06/15/00 | |
| | | Laboratory | Lancaster Laboratories | | Lancaster Laboratories | | Lancaster Laboratories | |
| | | Sample Collector | IT Corporation (Fluor Daniel/GTI | | IT Corporation (Fluor Daniel/GTI | | IT Corporation (Fluor Daniel/GTI | |
| | | Result Units | MG/KG | | MG/KG | | MG/KG | |
| Category | Analyte | Action Level | Result Flag | > CAL* | Result Flag | > CAL* | Result Flag | > CAL* |
| VOA | BENZENE | 12 | ND | | ND | | | |
| | TOLUENE | 16000 | ND | | ND | | | |
| | ETHYLBENZENE | 7800 | ND | | ND | | | |
| | XYLENE (TOTAL) | 160000 | ND | | ND | | | |
| | METHYLENE CHLORIDE | 85 | ND | | ND | | | |
| | ACETONE | 7800 | ND | | ND | | | |
| BNA | NAPHTHALENE | 1600 | ND | | ND | | | |
| | ACENAPHTHENE | 4700 | ND | | ND | | | |
| | FLUORENE | 3100 | ND | | ND | | | |
| | PHENANTHRENE | 23000 | ND | | ND | | | |
| | ANTHRACENE | 23000 | ND | | ND | | | |
| | FLUORANTHENE | 3100 | ND | | ND | | | |
| | PYRENE | 2300 | ND | | ND | | | |
| | BENZO(A)ANTHRACENE | .87 | ND | | ND | | | |
| | BENZO(B)FLUORANTHENE | .87 | ND | | ND | | | |
| | CHRYSENE | 87 | ND | | ND | | | |
| | BENZO(K)FLUORANTHENE | 8.7 | ND | | ND | | | |

Notes:

* "> CAL" equals "X" when reported value is above characterization action level for this locale.
J flag - Numerical value is an estimated quantity.
ND indicates Non-Detect
Blank cells in result column indicate an analysis was not performed for that analyte.

Date generated: November 20, 2000

# Table 4-3
## Summary of Analytical Results

| | | | | | | | | |
|---|---|---|---|---|---|---|---|---|
| | | PRA | 11 | | | | 12 | |
| | | PRA Description | COUNTY ROADSIDE DITCH | | | | STATION BLOWDOWN VENTS | |
| | | Sample Type | Field Duplicate (Rep) | | Normal Sample | | Normal Sample | |
| | | Sample Id | BRK-FSD001-31001 | | BRK-FSD001-30001 | | BRK-FSS018-40001 | |
| | | Depth - ft bgs | 0 - 1 | | 0 - 1 | | 0 - 0.5 | |
| | | Collected Date | 06/15/00 | | 06/15/00 | | 06/15/00 | |
| | | Laboratory | Lancaster Laboratories | | Lancaster Laboratories | | Lancaster Laboratories | |
| | | Sample Collector | IT Corporation (Fluor Daniel/GTI) | | IT Corporation (Fluor Daniel/GTI) | | IT Corporation (Fluor Daniel/GTI) | |
| | | Result Units | MG/KG | | MG/KG | | MG/KG | |
| Category | Analyte | Action Level | Result Flag | > CAL* | Result Flag | > CAL* | Result Flag | > CAL* |
| | BENZO(A)PYRENE | .087 | ND | | ND | | | |
| | DIBENZO(A,H)ANTHRACENE | .087 | ND | | ND | | | |
| | BENZO(G,H,I)PERYLENE | 2300 | ND | | ND | | | |
| | INDENO(1,2,3-CD)PYRENE | .87 | ND | | ND | | | |
| P/PCB | AROCLOR-1254 | 1 | ND | | ND | | ND | |
| METAL | BARIUM, TOTAL | 5500 | 58.1 | | 49.5 | | | |
| | BERYLLIUM, TOTAL | 160 | ND | | ND | | | |
| | CADMIUM, TOTAL | 39 | ND | | ND | | | |
| | CHROMIUM, TOTAL | 230 | 12.9 J | | 10.8 J | | | |
| | LEAD, TOTAL | 400 | ND | | ND | | | |
| | NICKEL, TOTAL | 1600 | 17.1 | | 16.2 | | | |
| | MERCURY, TOTAL | 20 | ND | | ND | | | |
| | ARSENIC, TOTAL | .43 | 11.5 | X | 9.9 | X | | |

Notes:

* "> CAL" equals "X" when reported value is above characterization action level for this locale.
J flag - Numerical value is an estimated quantity.
ND indicates Non-Detect
Blank cells in result column indicate an analysis was not performed for that analyte.

Date generated: November 20, 2000

# Table 4-3
## Summary of Analytical Results

| | | | | | | | | |
|---|---|---|---|---|---|---|---|---|
| | | PRA | | | 13 | | | |
| | | PRA Description | | | COMPRESSED AIR SYSTEM/AUX. BLDG. | | | |
| | | Sample Type | | | Field Duplicate (Rep) | | | |
| | | Sample Id | BRK-FSS019-40001 | | BRK-FCH008-81001 | | BRK-FML002-11001 | |
| | | Depth - ft bgs | 0 - 0.5 | | 0 - 0 | | 0 - 0 | |
| | | Collected Date | 06/15/00 | | 06/19/00 | | 06/19/00 | |
| | | Laboratory | Lancaster Laboratories | | Lancaster Laboratories | | Lancaster Laboratories | |
| | | Sample Collector | IT Corporation (Fluor Daniel/GTI | | IT Corporation (Fluor Daniel/GTI | | IT Corporation (Fluor Daniel/GTI | |
| | | Result Units | MG/KG | | MG/KG | | MG/KG | |
| Category | Analyte | Action Level | Result Flag | > CAL* | Result Flag | > CAL* | Result Flag | > CAL* |
| VOA | BENZENE | 12 | | | | | | |
| | TOLUENE | 16000 | | | | | | |
| | ETHYLBENZENE | 7800 | | | | | | |
| | XYLENE (TOTAL) | 160000 | | | | | | |
| | METHYLENE CHLORIDE | 85 | | | | | | |
| | ACETONE | 7800 | | | | | | |
| BNA | NAPHTHALENE | 1600 | | | | | | |
| | ACENAPHTHENE | 4700 | | | | | | |
| | FLUORENE | 3100 | | | | | | |
| | PHENANTHRENE | 23000 | | | | | | |
| | ANTHRACENE | 23000 | | | | | | |
| | FLUORANTHENE | 3100 | | | | | | |
| | PYRENE | 2300 | | | | | | |
| | BENZO(A)ANTHRACENE | .87 | | | | | | |
| | BENZO(B)FLUORANTHENE | .87 | | | | | | |
| | CHRYSENE | 87 | | | | | | |
| | BENZO(K)FLUORANTHENE | 8.7 | | | | | | |

Notes:

* "> CAL" equals "X" when reported value is above characterization action level for this locale.
J flag - Numerical value is an estimated quantity.
ND indicates Non-Detect
Blank cells in result column indicate an analysis was not performed for that analyte.

Date generated: November 20, 2000

# Table 4-3
# Summary of Analytical Results

| | | | | | | | | |
|---|---|---|---|---|---|---|---|---|
| | | PRA | | | 13 | | | |
| | | PRA Description | | | COMPRESSED AIR SYSTEM/AUX. BLDG. | | | |
| | | Sample Type | | | Field Duplicate (Rep) | | | |
| | | Sample Id | BRK-FSS019-40001 | | BRK-FCH008-81001 | | BRK-FML002-11001 | |
| | | Depth - ft bgs | 0 - 0.5 | | 0 - 0 | | 0 - 0 | |
| | | Collected Date | 06/15/00 | | 06/19/00 | | 06/19/00 | |
| | | Laboratory | Lancaster Laboratories | | Lancaster Laboratories | | Lancaster Laboratories | |
| | | Sample Collector | IT Corporation (Fluor Daniel/GTI | | IT Corporation (Fluor Daniel/GTI | | IT Corporation (Fluor Daniel/GTI | |
| | | Result Units | MG/KG | | MG/KG | | MG/KG | |
| Category | Analyte | Action Level | Result Flag | > CAL* | Result Flag | > CAL* | Result Flag | > CAL* |
| | BENZO(A)PYRENE | .087 | | | | | | |
| | DIBENZO(A,H)ANTHRACENE | .087 | | | | | | |
| | BENZO(G,H,I)PERYLENE | 2300 | | | | | | |
| | INDENO(1,2,3-CD)PYRENE | .87 | | | | | | |
| P/PCB | AROCLOR-1254 | 1 | ND | | 0.39 | | ND | |
| METAL | BARIUM, TOTAL | 5500 | | | | | | |
| | BERYLLIUM, TOTAL | 160 | | | | | | |
| | CADMIUM, TOTAL | 39 | | | | | | |
| | CHROMIUM, TOTAL | 230 | | | | | | |
| | LEAD, TOTAL | 400 | | | | | | |
| | NICKEL, TOTAL | 1600 | | | | | | |
| | MERCURY, TOTAL | 20 | | | | | | |
| | ARSENIC, TOTAL | .43 | | | | | | |

Notes:

* "> CAL" equals "X" when reported value is above characterization action level for this locale.
J flag - Numerical value is an estimated quantity.
ND indicates Non-Detect
Blank cells in result column indicate an analysis was not performed for that analyte.

Date generated: November 20, 2000

# Table 4-3
# Summary of Analytical Results

| | | | | | | | | |
|---|---|---|---|---|---|---|---|---|
| | | PRA | | | | | | |
| | | PRA Description | | | | | | |
| | | Sample Type | **Normal Sample** | | | | | |
| | | Sample Id | **BRK-FCH001-80001** | | **BRK-FCH002-80001** | | **BRK-FCH003-80001** | |
| | | Depth - ft bgs | **0 - 0** | | **0 - 0** | | **0 - 0** | |
| | | Collected Date | **06/19/00** | | **06/19/00** | | **06/19/00** | |
| | | Laboratory | **Lancaster Laboratories** | | **Lancaster Laboratories** | | **Lancaster Laboratories** | |
| | | Sample Collector | **IT Corporation (Fluor Daniel/GTI** | | **IT Corporation (Fluor Daniel/GTI** | | **IT Corporation (Fluor Daniel/GTI** | |
| | | Result Units | **MG/KG** | | **MG/KG** | | **MG/KG** | |
| Category | Analyte | Action Level | **Result Flag** | **> CAL*** | **Result Flag** | **> CAL*** | **Result Flag** | **> CAL*** |
| **VOA** | **BENZENE** | 12 | | | | | | |
| | **TOLUENE** | 16000 | | | | | | |
| | **ETHYLBENZENE** | 7800 | | | | | | |
| | **XYLENE (TOTAL)** | 160000 | | | | | | |
| | **METHYLENE CHLORIDE** | 85 | | | | | | |
| | **ACETONE** | 7800 | | | | | | |
| **BNA** | **NAPHTHALENE** | 1600 | | | | | | |
| | **ACENAPHTHENE** | 4700 | | | | | | |
| | **FLUORENE** | 3100 | | | | | | |
| | **PHENANTHRENE** | 23000 | | | | | | |
| | **ANTHRACENE** | 23000 | | | | | | |
| | **FLUORANTHENE** | 3100 | | | | | | |
| | **PYRENE** | 2300 | | | | | | |
| | **BENZO(A)ANTHRACENE** | .87 | | | | | | |
| | **BENZO(B)FLUORANTHENE** | .87 | | | | | | |
| | **CHRYSENE** | 87 | | | | | | |
| | **BENZO(K)FLUORANTHENE** | 8.7 | | | | | | |

Notes:

* "> CAL" equals "X" when reported value is above characterization action level for this locale.
J flag - Numerical value is an estimated quantity.
ND indicates Non-Detect
Blank cells in result column indicate an analysis was not performed for that analyte.

Date generated: November 20, 2000

# Table 4-3
# Summary of Analytical Results

| | | | | | | | | |
|---|---|---|---|---|---|---|---|---|
| | | PRA | | | | | | |
| | | PRA Description | | | | | | |
| | | Sample Type | **Normal Sample** | | | | | |
| | | Sample Id | **BRK-FCH001-80001** | | **BRK-FCH002-80001** | | **BRK-FCH003-80001** | |
| | | Depth - ft bgs | **0 - 0** | | **0 - 0** | | **0 - 0** | |
| | | Collected Date | **06/19/00** | | **06/19/00** | | **06/19/00** | |
| | | Laboratory | **Lancaster Laboratories** | | **Lancaster Laboratories** | | **Lancaster Laboratories** | |
| | | Sample Collector | **IT Corporation (Fluor Daniel/GTI** | | **IT Corporation (Fluor Daniel/GTI** | | **IT Corporation (Fluor Daniel/GTI** | |
| | | Result Units | **MG/KG** | | **MG/KG** | | **MG/KG** | |
| Category | Analyte | Action Level | **Result Flag** | **> CAL*** | **Result Flag** | **> CAL*** | **Result Flag** | **> CAL*** |
| | **BENZO(A)PYRENE** | .087 | | | | | | |
| | **DIBENZO(A,H)ANTHRACENE** | .087 | | | | | | |
| | **BENZO(G,H,I)PERYLENE** | 2300 | | | | | | |
| | **INDENO(1,2,3-CD)PYRENE** | .87 | | | | | | |
| **P/PCB** | **AROCLOR-1254** | 1 | 25 | X | 0.87 | | 2.3 | X |
| **METAL** | **BARIUM, TOTAL** | 5500 | | | | | | |
| | **BERYLLIUM, TOTAL** | 160 | | | | | | |
| | **CADMIUM, TOTAL** | 39 | | | | | | |
| | **CHROMIUM, TOTAL** | 230 | | | | | | |
| | **LEAD, TOTAL** | 400 | | | | | | |
| | **NICKEL, TOTAL** | 1600 | | | | | | |
| | **MERCURY, TOTAL** | 20 | | | | | | |
| | **ARSENIC, TOTAL** | .43 | | | | | | |

Notes:

* "> CAL" equals "X" when reported value is above characterization action level for this locale.
J flag - Numerical value is an estimated quantity.
ND indicates Non-Detect
Blank cells in result column indicate an analysis was not performed for that analyte.

Date generated: November 20, 2000

# Table 4-3
# Summary of Analytical Results

| | | | | | | | | |
|---|---|---|---|---|---|---|---|---|
| | | PRA | | | | | | |
| | | PRA Description | | | | | | |
| | | Sample Type | | | | | | |
| | | Sample Id | **BRK-FCH004-80001** | | **BRK-FCH005-80001** | | **BRK-FCH006-80001** | |
| | | Depth - ft bgs | **0 - 0** | | **0 - 0** | | **0 - 0** | |
| | | Collected Date | **06/19/00** | | **06/19/00** | | **06/19/00** | |
| | | Laboratory | **Lancaster Laboratories** | | **Lancaster Laboratories** | | **Lancaster Laboratories** | |
| | | Sample Collector | **IT Corporation (Fluor Daniel/GTI** | | **IT Corporation (Fluor Daniel/GTI** | | **IT Corporation (Fluor Daniel/GTI** | |
| | | Result Units | **MG/KG** | | **MG/KG** | | **MG/KG** | |
| Category | Analyte | Action Level | **Result Flag** | **> CAL*** | **Result Flag** | **> CAL*** | **Result Flag** | **> CAL*** |
| **VOA** | **BENZENE** | 12 | | | | | | |
| | **TOLUENE** | 16000 | | | | | | |
| | **ETHYLBENZENE** | 7800 | | | | | | |
| | **XYLENE (TOTAL)** | 160000 | | | | | | |
| | **METHYLENE CHLORIDE** | 85 | | | | | | |
| | **ACETONE** | 7800 | | | | | | |
| **BNA** | **NAPHTHALENE** | 1600 | | | | | | |
| | **ACENAPHTHENE** | 4700 | | | | | | |
| | **FLUORENE** | 3100 | | | | | | |
| | **PHENANTHRENE** | 23000 | | | | | | |
| | **ANTHRACENE** | 23000 | | | | | | |
| | **FLUORANTHENE** | 3100 | | | | | | |
| | **PYRENE** | 2300 | | | | | | |
| | **BENZO(A)ANTHRACENE** | .87 | | | | | | |
| | **BENZO(B)FLUORANTHENE** | .87 | | | | | | |
| | **CHRYSENE** | 87 | | | | | | |
| | **BENZO(K)FLUORANTHENE** | 8.7 | | | | | | |

Notes:

* "> CAL" equals "X" when reported value is above characterization action level for this locale.
J flag - Numerical value is an estimated quantity.
ND indicates Non-Detect
Blank cells in result column indicate an analysis was not performed for that analyte.

Date generated: November 20, 2000

# Table 4-3
# Summary of Analytical Results

| | | | | | | | | |
|---|---|---|---|---|---|---|---|---|
| | | PRA | | | | | | |
| | | PRA Description | | | | | | |
| | | Sample Type | | | | | | |
| | | Sample Id | **BRK-FCH004-80001** | | **BRK-FCH005-80001** | | **BRK-FCH006-80001** | |
| | | Depth - ft bgs | **0 - 0** | | **0 - 0** | | **0 - 0** | |
| | | Collected Date | **06/19/00** | | **06/19/00** | | **06/19/00** | |
| | | Laboratory | **Lancaster Laboratories** | | **Lancaster Laboratories** | | **Lancaster Laboratories** | |
| | | Sample Collector | **IT Corporation (Fluor Daniel/GTI** | | **IT Corporation (Fluor Daniel/GTI** | | **IT Corporation (Fluor Daniel/GTI** | |
| | | Result Units | **MG/KG** | | **MG/KG** | | **MG/KG** | |
| Category | Analyte | Action Level | **Result Flag** | **> CAL*** | **Result Flag** | **> CAL*** | **Result Flag** | **> CAL*** |
| | **BENZO(A)PYRENE** | .087 | | | | | | |
| | **DIBENZO(A,H)ANTHRACENE** | .087 | | | | | | |
| | **BENZO(G,H,I)PERYLENE** | 2300 | | | | | | |
| | **INDENO(1,2,3-CD)PYRENE** | .87 | | | | | | |
| **P/PCB** | **AROCLOR-1254** | 1 | 4.5 | X | 0.85 | | 16 | X |
| **METAL** | **BARIUM, TOTAL** | 5500 | | | | | | |
| | **BERYLLIUM, TOTAL** | 160 | | | | | | |
| | **CADMIUM, TOTAL** | 39 | | | | | | |
| | **CHROMIUM, TOTAL** | 230 | | | | | | |
| | **LEAD, TOTAL** | 400 | | | | | | |
| | **NICKEL, TOTAL** | 1600 | | | | | | |
| | **MERCURY, TOTAL** | 20 | | | | | | |
| | **ARSENIC, TOTAL** | .43 | | | | | | |

Notes:

* "> CAL" equals "X" when reported value is above characterization action level for this locale.
J flag - Numerical value is an estimated quantity.
ND indicates Non-Detect
Blank cells in result column indicate an analysis was not performed for that analyte.

Date generated: November 20, 2000

# Table 4-3
# Summary of Analytical Results

| | | | | | | | | |
|---|---|---|---|---|---|---|---|---|
| | | PRA | | | | | | |
| | | PRA Description | | | | | | |
| | | Sample Type | | | | | | |
| | | Sample Id | **BRK-FCH007-80001** | | **BRK-FCH008-80001** | | **BRK-FCH009-80001** | |
| | | Depth - ft bgs | **0 - 0** | | **0 - 0** | | **0 - 0** | |
| | | Collected Date | **06/19/00** | | **06/19/00** | | **06/19/00** | |
| | | Laboratory | **Lancaster Laboratories** | | **Lancaster Laboratories** | | **Lancaster Laboratories** | |
| | | Sample Collector | **IT Corporation (Fluor Daniel/GTI** | | **IT Corporation (Fluor Daniel/GTI** | | **IT Corporation (Fluor Daniel/GTI** | |
| | | Result Units | **MG/KG** | | **MG/KG** | | **MG/KG** | |
| Category | Analyte | Action Level | **Result Flag** | **> CAL*** | **Result Flag** | **> CAL*** | **Result Flag** | **> CAL*** |
| **VOA** | **BENZENE** | 12 | | | | | | |
| | **TOLUENE** | 16000 | | | | | | |
| | **ETHYLBENZENE** | 7800 | | | | | | |
| | **XYLENE (TOTAL)** | 160000 | | | | | | |
| | **METHYLENE CHLORIDE** | 85 | | | | | | |
| | **ACETONE** | 7800 | | | | | | |
| **BNA** | **NAPHTHALENE** | 1600 | | | | | | |
| | **ACENAPHTHENE** | 4700 | | | | | | |
| | **FLUORENE** | 3100 | | | | | | |
| | **PHENANTHRENE** | 23000 | | | | | | |
| | **ANTHRACENE** | 23000 | | | | | | |
| | **FLUORANTHENE** | 3100 | | | | | | |
| | **PYRENE** | 2300 | | | | | | |
| | **BENZO(A)ANTHRACENE** | .87 | | | | | | |
| | **BENZO(B)FLUORANTHENE** | .87 | | | | | | |
| | **CHRYSENE** | 87 | | | | | | |
| | **BENZO(K)FLUORANTHENE** | 8.7 | | | | | | |

Notes:

* "> CAL" equals "X" when reported value is above characterization action level for this locale.
J flag - Numerical value is an estimated quantity.
ND indicates Non-Detect
Blank cells in result column indicate an analysis was not performed for that analyte.

Date generated: November 20, 2000

# Table 4-3
# Summary of Analytical Results

| | | | | | | | | |
|---|---|---|---|---|---|---|---|---|
| | | PRA | | | | | | |
| | | PRA Description | | | | | | |
| | | Sample Type | | | | | | |
| | | Sample Id | **BRK-FCH007-80001** | | **BRK-FCH008-80001** | | **BRK-FCH009-80001** | |
| | | Depth - ft bgs | **0 - 0** | | **0 - 0** | | **0 - 0** | |
| | | Collected Date | **06/19/00** | | **06/19/00** | | **06/19/00** | |
| | | Laboratory | **Lancaster Laboratories** | | **Lancaster Laboratories** | | **Lancaster Laboratories** | |
| | | Sample Collector | **IT Corporation (Fluor Daniel/GTI** | | **IT Corporation (Fluor Daniel/GTI** | | **IT Corporation (Fluor Daniel/GTI** | |
| | | Result Units | **MG/KG** | | **MG/KG** | | **MG/KG** | |
| Category | Analyte | Action Level | **Result Flag** | **> CAL*** | **Result Flag** | **> CAL*** | **Result Flag** | **> CAL*** |
| | **BENZO(A)PYRENE** | .087 | | | | | | |
| | **DIBENZO(A,H)ANTHRACENE** | .087 | | | | | | |
| | **BENZO(G,H,I)PERYLENE** | 2300 | | | | | | |
| | **INDENO(1,2,3-CD)PYRENE** | .87 | | | | | | |
| **P/PCB** | **AROCLOR-1254** | 1 | 0.26 | | 0.17 | | 49 | X |
| **METAL** | **BARIUM, TOTAL** | 5500 | | | | | | |
| | **BERYLLIUM, TOTAL** | 160 | | | | | | |
| | **CADMIUM, TOTAL** | 39 | | | | | | |
| | **CHROMIUM, TOTAL** | 230 | | | | | | |
| | **LEAD, TOTAL** | 400 | | | | | | |
| | **NICKEL, TOTAL** | 1600 | | | | | | |
| | **MERCURY, TOTAL** | 20 | | | | | | |
| | **ARSENIC, TOTAL** | .43 | | | | | | |

Notes:

* "> CAL" equals "X" when reported value is above characterization action level for this locale.
J flag - Numerical value is an estimated quantity.
ND indicates Non-Detect
Blank cells in result column indicate an analysis was not performed for that analyte.

Date generated: November 20, 2000

# Table 4-3
# Summary of Analytical Results

| | | | | | | | | |
|---|---|---|---|---|---|---|---|---|
| | | PRA | | | | | | |
| | | PRA Description | | | | | | |
| | | Sample Type | | | | | | |
| | | Sample Id | **BRK-FCH010-80001** | | **BRK-FCH011-80001** | | **BRK-FML001-10001** | |
| | | Depth - ft bgs | **0 - 0** | | **0 - 0** | | **0 - 0** | |
| | | Collected Date | **06/19/00** | | **06/19/00** | | **06/19/00** | |
| | | Laboratory | **Lancaster Laboratories** | | **Lancaster Laboratories** | | **Lancaster Laboratories** | |
| | | Sample Collector | **IT Corporation (Fluor Daniel/GTI** | | **IT Corporation (Fluor Daniel/GTI** | | **IT Corporation (Fluor Daniel/GTI** | |
| | | Result Units | **MG/KG** | | **MG/KG** | | **MG/KG** | |
| Category | Analyte | Action Level | **Result Flag** | **> CAL*** | **Result Flag** | **> CAL*** | **Result Flag** | **> CAL*** |
| **VOA** | **BENZENE** | 12 | | | | | | |
| | **TOLUENE** | 16000 | | | | | | |
| | **ETHYLBENZENE** | 7800 | | | | | | |
| | **XYLENE (TOTAL)** | 160000 | | | | | | |
| | **METHYLENE CHLORIDE** | 85 | | | | | | |
| | **ACETONE** | 7800 | | | | | | |
| **BNA** | **NAPHTHALENE** | 1600 | | | | | | |
| | **ACENAPHTHENE** | 4700 | | | | | | |
| | **FLUORENE** | 3100 | | | | | | |
| | **PHENANTHRENE** | 23000 | | | | | | |
| | **ANTHRACENE** | 23000 | | | | | | |
| | **FLUORANTHENE** | 3100 | | | | | | |
| | **PYRENE** | 2300 | | | | | | |
| | **BENZO(A)ANTHRACENE** | .87 | | | | | | |
| | **BENZO(B)FLUORANTHENE** | .87 | | | | | | |
| | **CHRYSENE** | 87 | | | | | | |
| | **BENZO(K)FLUORANTHENE** | 8.7 | | | | | | |

Notes:

* "> CAL" equals "X" when reported value is above characterization action level for this locale.
J flag - Numerical value is an estimated quantity.
ND indicates Non-Detect
Blank cells in result column indicate an analysis was not performed for that analyte.

Date generated: November 20, 2000

# Table 4-3
# Summary of Analytical Results

| | | | | | | | | |
|---|---|---|---|---|---|---|---|---|
| | | PRA | | | | | | |
| | | PRA Description | | | | | | |
| | | Sample Type | | | | | | |
| | | Sample Id | **BRK-FCH010-80001** | | **BRK-FCH011-80001** | | **BRK-FML001-10001** | |
| | | Depth - ft bgs | **0 - 0** | | **0 - 0** | | **0 - 0** | |
| | | Collected Date | **06/19/00** | | **06/19/00** | | **06/19/00** | |
| | | Laboratory | **Lancaster Laboratories** | | **Lancaster Laboratories** | | **Lancaster Laboratories** | |
| | | Sample Collector | **IT Corporation (Fluor Daniel/GTI** | | **IT Corporation (Fluor Daniel/GTI** | | **IT Corporation (Fluor Daniel/GTI** | |
| | | Result Units | **MG/KG** | | **MG/KG** | | **MG/KG** | |
| Category | Analyte | Action Level | **Result Flag** | **> CAL*** | **Result Flag** | **> CAL*** | **Result Flag** | **> CAL*** |
| | **BENZO(A)PYRENE** | .087 | | | | | | |
| | **DIBENZO(A,H)ANTHRACENE** | .087 | | | | | | |
| | **BENZO(G,H,I)PERYLENE** | 2300 | | | | | | |
| | **INDENO(1,2,3-CD)PYRENE** | .87 | | | | | | |
| **P/PCB** | **AROCLOR-1254** | 1 | 68 | X | 47 | X | ND | |
| **METAL** | **BARIUM, TOTAL** | 5500 | | | | | | |
| | **BERYLLIUM, TOTAL** | 160 | | | | | | |
| | **CADMIUM, TOTAL** | 39 | | | | | | |
| | **CHROMIUM, TOTAL** | 230 | | | | | | |
| | **LEAD, TOTAL** | 400 | | | | | | |
| | **NICKEL, TOTAL** | 1600 | | | | | | |
| | **MERCURY, TOTAL** | 20 | | | | | | |
| | **ARSENIC, TOTAL** | .43 | | | | | | |

Notes:

* "> CAL" equals "X" when reported value is above characterization action level for this locale.
J flag - Numerical value is an estimated quantity.
ND indicates Non-Detect
Blank cells in result column indicate an analysis was not performed for that analyte.

Date generated: November 20, 2000

# Table 4-3
# Summary of Analytical Results

| | | | | | | | | |
|---|---|---|---|---|---|---|---|---|
| | | PRA | | | | | | |
| | | PRA Description | | | | | | |
| | | Sample Type | | | | | | |
| | | Sample Id | **BRK-FML002-10001** | | **BRK-FML003-10001** | | **BRK-FSS025-40001** | |
| | | Depth - ft bgs | **0 - 0** | | **0 - 0** | | **0 - 0.5** | |
| | | Collected Date | **06/19/00** | | **06/19/00** | | **06/13/00** | |
| | | Laboratory | **Lancaster Laboratories** | | **Lancaster Laboratories** | | **Lancaster Laboratories** | |
| | | Sample Collector | **IT Corporation (Fluor Daniel/GTI** | | **IT Corporation (Fluor Daniel/GTI** | | **IT Corporation (Fluor Daniel/GTI** | |
| | | Result Units | **MG/KG** | | **MG/KG** | | **MG/KG** | |
| Category | Analyte | Action Level | **Result Flag** | **> CAL*** | **Result Flag** | **> CAL*** | **Result Flag** | **> CAL*** |
| **VOA** | **BENZENE** | 12 | | | | | | |
| | **TOLUENE** | 16000 | | | | | | |
| | **ETHYLBENZENE** | 7800 | | | | | | |
| | **XYLENE (TOTAL)** | 160000 | | | | | | |
| | **METHYLENE CHLORIDE** | 85 | | | | | | |
| | **ACETONE** | 7800 | | | | | | |
| **BNA** | **NAPHTHALENE** | 1600 | | | | | | |
| | **ACENAPHTHENE** | 4700 | | | | | | |
| | **FLUORENE** | 3100 | | | | | | |
| | **PHENANTHRENE** | 23000 | | | | | | |
| | **ANTHRACENE** | 23000 | | | | | | |
| | **FLUORANTHENE** | 3100 | | | | | | |
| | **PYRENE** | 2300 | | | | | | |
| | **BENZO(A)ANTHRACENE** | .87 | | | | | | |
| | **BENZO(B)FLUORANTHENE** | .87 | | | | | | |
| | **CHRYSENE** | 87 | | | | | | |
| | **BENZO(K)FLUORANTHENE** | 8.7 | | | | | | |

Notes:

* "> CAL" equals "X" when reported value is above characterization action level for this locale.
J flag - Numerical value is an estimated quantity.
ND indicates Non-Detect
Blank cells in result column indicate an analysis was not performed for that analyte.

Date generated: November 20, 2000

# Table 4-3
# Summary of Analytical Results

| | | | | | | | | |
|---|---|---|---|---|---|---|---|---|
| | | PRA | | | | | | |
| | | PRA Description | | | | | | |
| | | Sample Type | | | | | | |
| | | Sample Id | **BRK-FML002-10001** | | **BRK-FML003-10001** | | **BRK-FSS025-40001** | |
| | | Depth - ft bgs | **0 - 0** | | **0 - 0** | | **0 - 0.5** | |
| | | Collected Date | **06/19/00** | | **06/19/00** | | **06/13/00** | |
| | | Laboratory | **Lancaster Laboratories** | | **Lancaster Laboratories** | | **Lancaster Laboratories** | |
| | | Sample Collector | **IT Corporation (Fluor Daniel/GTI** | | **IT Corporation (Fluor Daniel/GTI** | | **IT Corporation (Fluor Daniel/GTI** | |
| | | Result Units | **MG/KG** | | **MG/KG** | | **MG/KG** | |
| Category | Analyte | Action Level | **Result Flag** | **> CAL*** | **Result Flag** | **> CAL*** | **Result Flag** | **> CAL*** |
| | **BENZO(A)PYRENE** | .087 | | | | | | |
| | **DIBENZO(A,H)ANTHRACENE** | .087 | | | | | | |
| | **BENZO(G,H,I)PERYLENE** | 2300 | | | | | | |
| | **INDENO(1,2,3-CD)PYRENE** | .87 | | | | | | |
| **P/PCB** | **AROCLOR-1254** | 1 | ND | | ND | | ND | |
| **METAL** | **BARIUM, TOTAL** | 5500 | | | | | | |
| | **BERYLLIUM, TOTAL** | 160 | | | | | | |
| | **CADMIUM, TOTAL** | 39 | | | | | | |
| | **CHROMIUM, TOTAL** | 230 | | | | | | |
| | **LEAD, TOTAL** | 400 | | | | | | |
| | **NICKEL, TOTAL** | 1600 | | | | | | |
| | **MERCURY, TOTAL** | 20 | | | | | | |
| | **ARSENIC, TOTAL** | .43 | | | | | | |

Notes:

* "> CAL" equals "X" when reported value is above characterization action level for this locale.
J flag - Numerical value is an estimated quantity.
ND indicates Non-Detect
Blank cells in result column indicate an analysis was not performed for that analyte.

Date generated: November 20, 2000

# Table 4-3
# Summary of Analytical Results

| | | | | | | | | |
|---|---|---|---|---|---|---|---|---|
| | | PRA | | | | | 14 | |
| | | PRA Description | | | | | AIR RECEIVER TANK | |
| | | Sample Type | | | | | Normal Sample | |
| | | Sample Id | BRK-FSS026-40001 | | BRK-FSS027-40001 | | BRK-FSS028-40001 | |
| | | Depth - ft bgs | 0 - 0.5 | | 0 - 0.5 | | 0 - 0.5 | |
| | | Collected Date | 06/13/00 | | 06/13/00 | | 06/13/00 | |
| | | Laboratory | Lancaster Laboratories | | Lancaster Laboratories | | Lancaster Laboratories | |
| | | Sample Collector | IT Corporation (Fluor Daniel/GTI | | IT Corporation (Fluor Daniel/GTI | | IT Corporation (Fluor Daniel/GTI | |
| | | Result Units | MG/KG | | MG/KG | | MG/KG | |
| Category | Analyte | Action Level | Result Flag | > CAL* | Result Flag | > CAL* | Result Flag | > CAL* |
| VOA | BENZENE | 12 | | | | | | |
| | TOLUENE | 16000 | | | | | | |
| | ETHYLBENZENE | 7800 | | | | | | |
| | XYLENE (TOTAL) | 160000 | | | | | | |
| | METHYLENE CHLORIDE | 85 | | | | | | |
| | ACETONE | 7800 | | | | | | |
| BNA | NAPHTHALENE | 1600 | | | | | | |
| | ACENAPHTHENE | 4700 | | | | | | |
| | FLUORENE | 3100 | | | | | | |
| | PHENANTHRENE | 23000 | | | | | | |
| | ANTHRACENE | 23000 | | | | | | |
| | FLUORANTHENE | 3100 | | | | | | |
| | PYRENE | 2300 | | | | | | |
| | BENZO(A)ANTHRACENE | .87 | | | | | | |
| | BENZO(B)FLUORANTHENE | .87 | | | | | | |
| | CHRYSENE | 87 | | | | | | |
| | BENZO(K)FLUORANTHENE | 8.7 | | | | | | |

Notes:

* "> CAL" equals "X" when reported value is above characterization action level for this locale.
J flag - Numerical value is an estimated quantity.
ND indicates Non-Detect
Blank cells in result column indicate an analysis was not performed for that analyte.

Date generated: November 20, 2000

# Table 4-3
# Summary of Analytical Results

| | | | | | | | | |
|---|---|---|---|---|---|---|---|---|
| | | PRA | | | | | 14 | |
| | | PRA Description | | | | | AIR RECEIVER TANK | |
| | | Sample Type | | | | | Normal Sample | |
| | | Sample Id | BRK-FSS026-40001 | | BRK-FSS027-40001 | | BRK-FSS028-40001 | |
| | | Depth - ft bgs | 0 - 0.5 | | 0 - 0.5 | | 0 - 0.5 | |
| | | Collected Date | 06/13/00 | | 06/13/00 | | 06/13/00 | |
| | | Laboratory | Lancaster Laboratories | | Lancaster Laboratories | | Lancaster Laboratories | |
| | | Sample Collector | IT Corporation (Fluor Daniel/GTI | | IT Corporation (Fluor Daniel/GTI | | IT Corporation (Fluor Daniel/GTI | |
| | | Result Units | MG/KG | | MG/KG | | MG/KG | |
| Category | Analyte | Action Level | Result Flag | > CAL* | Result Flag | > CAL* | Result Flag | > CAL* |
| | BENZO(A)PYRENE | .087 | | | | | | |
| | DIBENZO(A,H)ANTHRACENE | .087 | | | | | | |
| | BENZO(G,H,I)PERYLENE | 2300 | | | | | | |
| | INDENO(1,2,3-CD)PYRENE | .87 | | | | | | |
| P/PCB | AROCLOR-1254 | 1 | 0.10 | | 0.10 | | ND | |
| METAL | BARIUM, TOTAL | 5500 | | | | | | |
| | BERYLLIUM, TOTAL | 160 | | | | | | |
| | CADMIUM, TOTAL | 39 | | | | | | |
| | CHROMIUM, TOTAL | 230 | | | | | | |
| | LEAD, TOTAL | 400 | | | | | | |
| | NICKEL, TOTAL | 1600 | | | | | | |
| | MERCURY, TOTAL | 20 | | | | | | |
| | ARSENIC, TOTAL | .43 | | | | | | |

Notes:

* "> CAL" equals "X" when reported value is above characterization action level for this locale.
J flag - Numerical value is an estimated quantity.
ND indicates Non-Detect
Blank cells in result column indicate an analysis was not performed for that analyte.

Date generated: November 20, 2000

# Table 4-3
# Summary of Analytical Results

| | | | | | | | | |
|---|---|---|---|---|---|---|---|---|
| | | PRA | | | | | | |
| | | PRA Description | | | | | | |
| | | Sample Type | | | | | | |
| | | Sample Id | **BRK-FSS029-40001** | | **BRK-FSS030-40001** | | **BRK-FSS031-40001** | |
| | | Depth - ft bgs | **0 - 0.5** | | **0 - 0.5** | | **0 - 0.5** | |
| | | Collected Date | **06/13/00** | | **06/13/00** | | **06/13/00** | |
| | | Laboratory | **Lancaster Laboratories** | | **Lancaster Laboratories** | | **Lancaster Laboratories** | |
| | | Sample Collector | **IT Corporation (Fluor Daniel/GTI** | | **IT Corporation (Fluor Daniel/GTI** | | **IT Corporation (Fluor Daniel/GTI** | |
| | | Result Units | **MG/KG** | | **MG/KG** | | **MG/KG** | |
| Category | Analyte | Action Level | **Result Flag** | **> CAL*** | **Result Flag** | **> CAL*** | **Result Flag** | **> CAL*** |
| **VOA** | **BENZENE** | 12 | | | | | | |
| | **TOLUENE** | 16000 | | | | | | |
| | **ETHYLBENZENE** | 7800 | | | | | | |
| | **XYLENE (TOTAL)** | 160000 | | | | | | |
| | **METHYLENE CHLORIDE** | 85 | | | | | | |
| | **ACETONE** | 7800 | | | | | | |
| **BNA** | **NAPHTHALENE** | 1600 | | | | | | |
| | **ACENAPHTHENE** | 4700 | | | | | | |
| | **FLUORENE** | 3100 | | | | | | |
| | **PHENANTHRENE** | 23000 | | | | | | |
| | **ANTHRACENE** | 23000 | | | | | | |
| | **FLUORANTHENE** | 3100 | | | | | | |
| | **PYRENE** | 2300 | | | | | | |
| | **BENZO(A)ANTHRACENE** | .87 | | | | | | |
| | **BENZO(B)FLUORANTHENE** | .87 | | | | | | |
| | **CHRYSENE** | 87 | | | | | | |
| | **BENZO(K)FLUORANTHENE** | 8.7 | | | | | | |

Notes:

* "> CAL" equals "X" when reported value is above characterization action level for this locale.
J flag - Numerical value is an estimated quantity.
ND indicates Non-Detect
Blank cells in result column indicate an analysis was not performed for that analyte.

Date generated: November 20, 2000

# Table 4-3
# Summary of Analytical Results

| | | | | | | | | |
|---|---|---|---|---|---|---|---|---|
| | | PRA | | | | | | |
| | | PRA Description | | | | | | |
| | | Sample Type | | | | | | |
| | | Sample Id | **BRK-FSS029-40001** | | **BRK-FSS030-40001** | | **BRK-FSS031-40001** | |
| | | Depth - ft bgs | **0 - 0.5** | | **0 - 0.5** | | **0 - 0.5** | |
| | | Collected Date | **06/13/00** | | **06/13/00** | | **06/13/00** | |
| | | Laboratory | **Lancaster Laboratories** | | **Lancaster Laboratories** | | **Lancaster Laboratories** | |
| | | Sample Collector | **IT Corporation (Fluor Daniel/GTI** | | **IT Corporation (Fluor Daniel/GTI** | | **IT Corporation (Fluor Daniel/GTI** | |
| | | Result Units | **MG/KG** | | **MG/KG** | | **MG/KG** | |
| Category | Analyte | Action Level | **Result Flag** | **> CAL*** | **Result Flag** | **> CAL*** | **Result Flag** | **> CAL*** |
| | **BENZO(A)PYRENE** | .087 | | | | | | |
| | **DIBENZO(A,H)ANTHRACENE** | .087 | | | | | | |
| | **BENZO(G,H,I)PERYLENE** | 2300 | | | | | | |
| | **INDENO(1,2,3-CD)PYRENE** | .87 | | | | | | |
| **P/PCB** | **AROCLOR-1254** | 1 | ND | | ND | | ND | |
| **METAL** | **BARIUM, TOTAL** | 5500 | | | | | | |
| | **BERYLLIUM, TOTAL** | 160 | | | | | | |
| | **CADMIUM, TOTAL** | 39 | | | | | | |
| | **CHROMIUM, TOTAL** | 230 | | | | | | |
| | **LEAD, TOTAL** | 400 | | | | | | |
| | **NICKEL, TOTAL** | 1600 | | | | | | |
| | **MERCURY, TOTAL** | 20 | | | | | | |
| | **ARSENIC, TOTAL** | .43 | | | | | | |

Notes:

* "> CAL" equals "X" when reported value is above characterization action level for this locale.
J flag - Numerical value is an estimated quantity.
ND indicates Non-Detect
Blank cells in result column indicate an analysis was not performed for that analyte.

Date generated: November 20, 2000

# Table 4-3
# Summary of Analytical Results

| | | | | | | | | |
|---|---|---|---|---|---|---|---|---|
| | | PRA | | | | | 15 | |
| | | PRA Description | | | | | DRUM STORAGE BUILDING | |
| | | Sample Type | | | | | Normal Sample | |
| | | Sample Id | BRK-FSS032-40001 | | BRK-FSS033-40001 | | BRK-FSS034-40001 | |
| | | Depth - ft bgs | 0 - 0.5 | | 0 - 0.5 | | 0 - 1 | |
| | | Collected Date | 06/13/00 | | 06/13/00 | | 06/14/00 | |
| | | Laboratory | Lancaster Laboratories | | Lancaster Laboratories | | Lancaster Laboratories | |
| | | Sample Collector | IT Corporation (Fluor Daniel/GTI | | IT Corporation (Fluor Daniel/GTI | | IT Corporation (Fluor Daniel/GTI | |
| | | Result Units | MG/KG | | MG/KG | | MG/KG | |
| Category | Analyte | Action Level | Result Flag | > CAL* | Result Flag | > CAL* | Result Flag | > CAL* |
| VOA | BENZENE | 12 | | | | | ND | |
| | TOLUENE | 16000 | | | | | ND | |
| | ETHYLBENZENE | 7800 | | | | | ND | |
| | XYLENE (TOTAL) | 160000 | | | | | ND | |
| | METHYLENE CHLORIDE | 85 | | | | | ND | |
| | ACETONE | 7800 | | | | | ND | |
| BNA | NAPHTHALENE | 1600 | | | | | ND | |
| | ACENAPHTHENE | 4700 | | | | | ND | |
| | FLUORENE | 3100 | | | | | ND | |
| | PHENANTHRENE | 23000 | | | | | ND | |
| | ANTHRACENE | 23000 | | | | | ND | |
| | FLUORANTHENE | 3100 | | | | | ND | |
| | PYRENE | 2300 | | | | | ND | |
| | BENZO(A)ANTHRACENE | .87 | | | | | ND | |
| | BENZO(B)FLUORANTHENE | .87 | | | | | ND | |
| | CHRYSENE | 87 | | | | | ND | |
| | BENZO(K)FLUORANTHENE | 8.7 | | | | | ND | |

Notes:

* "> CAL" equals "X" when reported value is above characterization action level for this locale.
J flag - Numerical value is an estimated quantity.
ND indicates Non-Detect
Blank cells in result column indicate an analysis was not performed for that analyte.

Date generated: November 20, 2000

# Table 4-3
# Summary of Analytical Results

| | | | | | | | | |
|---|---|---|---|---|---|---|---|---|
| | | PRA | | | | | 15 | |
| | | PRA Description | | | | | DRUM STORAGE BUILDING | |
| | | Sample Type | | | | | Normal Sample | |
| | | Sample Id | BRK-FSS032-40001 | | BRK-FSS033-40001 | | BRK-FSS034-40001 | |
| | | Depth - ft bgs | 0 - 0.5 | | 0 - 0.5 | | 0 - 1 | |
| | | Collected Date | 06/13/00 | | 06/13/00 | | 06/14/00 | |
| | | Laboratory | Lancaster Laboratories | | Lancaster Laboratories | | Lancaster Laboratories | |
| | | Sample Collector | IT Corporation (Fluor Daniel/GTI | | IT Corporation (Fluor Daniel/GTI | | IT Corporation (Fluor Daniel/GTI | |
| | | Result Units | MG/KG | | MG/KG | | MG/KG | |
| Category | Analyte | Action Level | Result Flag | > CAL* | Result Flag | > CAL* | Result Flag | > CAL* |
| | BENZO(A)PYRENE | .087 | | | | | ND | |
| | DIBENZO(A,H)ANTHRACENE | .087 | | | | | ND | |
| | BENZO(G,H,I)PERYLENE | 2300 | | | | | ND | |
| | INDENO(1,2,3-CD)PYRENE | .87 | | | | | ND | |
| P/PCB | AROCLOR-1254 | 1 | ND | | ND | | ND | |
| METAL | BARIUM, TOTAL | 5500 | | | | | 157 | |
| | BERYLLIUM, TOTAL | 160 | | | | | ND | |
| | CADMIUM, TOTAL | 39 | | | | | ND | |
| | CHROMIUM, TOTAL | 230 | | | | | 25.2 | |
| | LEAD, TOTAL | 400 | | | | | ND | |
| | NICKEL, TOTAL | 1600 | | | | | 17.3 | |
| | MERCURY, TOTAL | 20 | | | | | ND | |
| | ARSENIC, TOTAL | .43 | | | | | 9.5 J | X |

Notes:

* "> CAL" equals "X" when reported value is above characterization action level for this locale.
J flag - Numerical value is an estimated quantity.
ND indicates Non-Detect
Blank cells in result column indicate an analysis was not performed for that analyte.

Date generated: November 20, 2000

# Table 4-3
# Summary of Analytical Results

| | | | | | | | | |
|---|---|---|---|---|---|---|---|---|
| | | PRA | | | 16 | | | |
| | | PRA Description | | | SCRAP YARD AND DRUM STORAGE | | | |
| | | Sample Type | | | Normal Sample | | | |
| | | Sample Id | BRK-FSS035-40001 | | BRK-FSS036-40001 | | BRK-FSS037-40001 | |
| | | Depth - ft bgs | 0 - 1 | | 0 - 1 | | 0 - 1 | |
| | | Collected Date | 06/14/00 | | 06/14/00 | | 06/14/00 | |
| | | Laboratory | Lancaster Laboratories | | Lancaster Laboratories | | Lancaster Laboratories | |
| | | Sample Collector | IT Corporation (Fluor Daniel/GTI | | IT Corporation (Fluor Daniel/GTI | | IT Corporation (Fluor Daniel/GTI | |
| | | Result Units | MG/KG | | MG/KG | | MG/KG | |
| Category | Analyte | Action Level | Result Flag | > CAL* | Result Flag | > CAL* | Result Flag | > CAL* |
| VOA | BENZENE | 12 | ND | | ND | | ND | |
| | TOLUENE | 16000 | ND | | ND | | ND | |
| | ETHYLBENZENE | 7800 | ND | | ND | | ND | |
| | XYLENE (TOTAL) | 160000 | ND | | ND | | ND | |
| | METHYLENE CHLORIDE | 85 | 0.015 | | 0.009 | | ND | |
| | ACETONE | 7800 | ND | | ND | | ND | |
| BNA | NAPHTHALENE | 1600 | ND | | ND | | 0.47 | |
| | ACENAPHTHENE | 4700 | ND | | ND | | 1.5 | |
| | FLUORENE | 3100 | ND | | ND | | 2.3 | |
| | PHENANTHRENE | 23000 | ND | | 0.52 | | 17 | |
| | ANTHRACENE | 23000 | ND | | ND | | 5.4 | |
| | FLUORANTHENE | 3100 | ND | | 0.63 | | 19 | |
| | PYRENE | 2300 | ND | | ND | | 12 | |
| | BENZO(A)ANTHRACENE | .87 | ND | | ND | | 7.0 | X |
| | BENZO(B)FLUORANTHENE | .87 | ND | | ND | | 7.1 | X |
| | CHRYSENE | 87 | ND | | ND | | 6.4 | |
| | BENZO(K)FLUORANTHENE | 8.7 | ND | | ND | | 2.9 | |

Notes:

* "> CAL" equals "X" when reported value is above characterization action level for this locale.
J flag - Numerical value is an estimated quantity.
ND indicates Non-Detect
Blank cells in result column indicate an analysis was not performed for that analyte.

Date generated: November 20, 2000

# Table 4-3
# Summary of Analytical Results

| | | | | | | | | |
|---|---|---|---|---|---|---|---|---|
| | | PRA | | | 16 | | | |
| | | PRA Description | | | SCRAP YARD AND DRUM STORAGE | | | |
| | | Sample Type | | | Normal Sample | | | |
| | | Sample Id | BRK-FSS035-40001 | | BRK-FSS036-40001 | | BRK-FSS037-40001 | |
| | | Depth - ft bgs | 0 - 1 | | 0 - 1 | | 0 - 1 | |
| | | Collected Date | 06/14/00 | | 06/14/00 | | 06/14/00 | |
| | | Laboratory | Lancaster Laboratories | | Lancaster Laboratories | | Lancaster Laboratories | |
| | | Sample Collector | IT Corporation (Fluor Daniel/GTI | | IT Corporation (Fluor Daniel/GTI | | IT Corporation (Fluor Daniel/GTI | |
| | | Result Units | MG/KG | | MG/KG | | MG/KG | |
| Category | Analyte | Action Level | Result Flag | > CAL* | Result Flag | > CAL* | Result Flag | > CAL* |
| | BENZO(A)PYRENE | .087 | ND | | ND | | 5.6 | X |
| | DIBENZO(A,H)ANTHRACENE | .087 | ND | | ND | | 0.95 | X |
| | BENZO(G,H,I)PERYLENE | 2300 | ND | | ND | | 2.7 | |
| | INDENO(1,2,3-CD)PYRENE | .87 | ND | | ND | | 3.4 | X |
| P/PCB | AROCLOR-1254 | 1 | ND | | ND | | ND | |
| METAL | BARIUM, TOTAL | 5500 | 69.0 | | 932 | | 205 | |
| | BERYLLIUM, TOTAL | 160 | ND | | ND | | ND | |
| | CADMIUM, TOTAL | 39 | ND | | ND | | ND | |
| | CHROMIUM, TOTAL | 230 | 17.5 | | 21.9 | | 29.0 | |
| | LEAD, TOTAL | 400 | ND | | 41.4 | | 47.6 | |
| | NICKEL, TOTAL | 1600 | 17.8 | | 18.8 | | 44.0 | |
| | MERCURY, TOTAL | 20 | ND | | ND | | ND | |
| | ARSENIC, TOTAL | .43 | 13.0 J | X | 13.6 J | X | 14.9 J | X |

Notes:

* "> CAL" equals "X" when reported value is above characterization action level for this locale.
J flag - Numerical value is an estimated quantity.
ND indicates Non-Detect
Blank cells in result column indicate an analysis was not performed for that analyte.

Date generated: November 20, 2000

# Table 4-3
# Summary of Analytical Results

| | | | | | | | | |
|---|---|---|---|---|---|---|---|---|
| | | PRA | | | | | | |
| | | PRA Description | | | | | | |
| | | Sample Type | | | | | | |
| | | Sample Id | **BRK-FSS038-40001** | | **BRK-FSS039-40001** | | **BRK-FSS040-40001** | |
| | | Depth - ft bgs | **0 - 1** | | **0 - 1** | | **0 - 1** | |
| | | Collected Date | **06/14/00** | | **06/14/00** | | **06/14/00** | |
| | | Laboratory | **Lancaster Laboratories** | | **Lancaster Laboratories** | | **Lancaster Laboratories** | |
| | | Sample Collector | **IT Corporation (Fluor Daniel/GTI** | | **IT Corporation (Fluor Daniel/GTI** | | **IT Corporation (Fluor Daniel/GTI** | |
| | | Result Units | **MG/KG** | | **MG/KG** | | **MG/KG** | |
| Category | Analyte | Action Level | **Result Flag** | **> CAL*** | **Result Flag** | **> CAL*** | **Result Flag** | **> CAL*** |
| **VOA** | **BENZENE** | 12 | ND | | ND | | ND | |
| | **TOLUENE** | 16000 | ND | | ND | | ND | |
| | **ETHYLBENZENE** | 7800 | ND | | ND | | ND | |
| | **XYLENE (TOTAL)** | 160000 | ND | | ND | | ND | |
| | **METHYLENE CHLORIDE** | 85 | 0.017 | | 0.008 | | 0.008 | |
| | **ACETONE** | 7800 | ND | | ND | | ND | |
| **BNA** | **NAPHTHALENE** | 1600 | ND | | ND | | ND | |
| | **ACENAPHTHENE** | 4700 | ND | | ND | | 0.54 | |
| | **FLUORENE** | 3100 | ND | | ND | | 0.47 | |
| | **PHENANTHRENE** | 23000 | 0.45 J | | ND | | 4.4 | |
| | **ANTHRACENE** | 23000 | ND | | ND | | 1.2 | |
| | **FLUORANTHENE** | 3100 | 0.72 J | | 0.39 | | 4.4 | |
| | **PYRENE** | 2300 | 0.49 | | ND | | 3.2 | |
| | **BENZO(A)ANTHRACENE** | .87 | ND | | ND | | 2.1 | X |
| | **BENZO(B)FLUORANTHENE** | .87 | ND | | ND | | 1.9 | X |
| | **CHRYSENE** | 87 | ND | | ND | | 1.8 | |
| | **BENZO(K)FLUORANTHENE** | 8.7 | ND | | ND | | 0.79 | |

Notes:

* "> CAL" equals "X" when reported value is above characterization action level for this locale.
J flag - Numerical value is an estimated quantity.
ND indicates Non-Detect
Blank cells in result column indicate an analysis was not performed for that analyte.

Date generated: November 20, 2000

# Table 4-3
# Summary of Analytical Results

| | | | | | | | | |
|---|---|---|---|---|---|---|---|---|
| | | PRA | | | | | | |
| | | PRA Description | | | | | | |
| | | Sample Type | | | | | | |
| | | Sample Id | **BRK-FSS038-40001** | | **BRK-FSS039-40001** | | **BRK-FSS040-40001** | |
| | | Depth - ft bgs | **0 - 1** | | **0 - 1** | | **0 - 1** | |
| | | Collected Date | **06/14/00** | | **06/14/00** | | **06/14/00** | |
| | | Laboratory | **Lancaster Laboratories** | | **Lancaster Laboratories** | | **Lancaster Laboratories** | |
| | | Sample Collector | **IT Corporation (Fluor Daniel/GTI** | | **IT Corporation (Fluor Daniel/GTI** | | **IT Corporation (Fluor Daniel/GTI** | |
| | | Result Units | **MG/KG** | | **MG/KG** | | **MG/KG** | |
| Category | Analyte | Action Level | **Result Flag** | **> CAL*** | **Result Flag** | **> CAL*** | **Result Flag** | **> CAL*** |
| | **BENZO(A)PYRENE** | .087 | ND | | ND | | 1.6 | X |
| | **DIBENZO(A,H)ANTHRACENE** | .087 | ND | | ND | | ND | |
| | **BENZO(G,H,I)PERYLENE** | 2300 | ND | | ND | | 0.89 | |
| | **INDENO(1,2,3-CD)PYRENE** | .87 | ND | | ND | | 1.2 | X |
| **P/PCB** | **AROCLOR-1254** | 1 | ND | | ND | | ND | |
| **METAL** | **BARIUM, TOTAL** | 5500 | 99.9 | | 70.0 | | 124 | |
| | **BERYLLIUM, TOTAL** | 160 | ND | | ND | | ND | |
| | **CADMIUM, TOTAL** | 39 | ND | | ND | | ND | |
| | **CHROMIUM, TOTAL** | 230 | 14.4 | | 18.2 | | 19.1 | |
| | **LEAD, TOTAL** | 400 | ND | | ND | | ND | |
| | **NICKEL, TOTAL** | 1600 | 13.5 | | 18.1 | | 18.8 | |
| | **MERCURY, TOTAL** | 20 | ND | | ND | | ND | |
| | **ARSENIC, TOTAL** | .43 | 9.3 | X | 16.9 J | X | 10.7 J | X |

Notes:

* "> CAL" equals "X" when reported value is above characterization action level for this locale.
J flag - Numerical value is an estimated quantity.
ND indicates Non-Detect
Blank cells in result column indicate an analysis was not performed for that analyte.

Date generated: November 20, 2000

# Table 4-3
# Summary of Analytical Results

| | | | | | | | | |
|---|---|---|---|---|---|---|---|---|
| | | PRA | | | | | | |
| | | PRA Description | | | | | | |
| | | Sample Type | | | | | | |
| | | Sample Id | **BRK-FSS041-40001** | | **BRK-FSS042-40001** | | **BRK-FSS043-40001** | |
| | | Depth - ft bgs | **0 - 1** | | **0 - 1** | | **0 - 1** | |
| | | Collected Date | **06/14/00** | | **06/14/00** | | **06/14/00** | |
| | | Laboratory | **Lancaster Laboratories** | | **Lancaster Laboratories** | | **Lancaster Laboratories** | |
| | | Sample Collector | **IT Corporation (Fluor Daniel/GTI** | | **IT Corporation (Fluor Daniel/GTI** | | **IT Corporation (Fluor Daniel/GTI** | |
| | | Result Units | **MG/KG** | | **MG/KG** | | **MG/KG** | |
| Category | Analyte | Action Level | **Result Flag** | **> CAL*** | **Result Flag** | **> CAL*** | **Result Flag** | **> CAL*** |
| **VOA** | **BENZENE** | 12 | ND | | ND | | ND | |
| | **TOLUENE** | 16000 | ND | | ND | | ND | |
| | **ETHYLBENZENE** | 7800 | ND | | ND | | ND | |
| | **XYLENE (TOTAL)** | 160000 | ND | | ND | | ND | |
| | **METHYLENE CHLORIDE** | 85 | 0.008 | | ND | | 0.009 | |
| | **ACETONE** | 7800 | ND | | ND | | ND | |
| **BNA** | **NAPHTHALENE** | 1600 | ND | | ND | | ND | |
| | **ACENAPHTHENE** | 4700 | ND | | ND | | ND | |
| | **FLUORENE** | 3100 | ND | | ND | | ND | |
| | **PHENANTHRENE** | 23000 | 1.0 | | ND | | ND | |
| | **ANTHRACENE** | 23000 | ND | | ND | | ND | |
| | **FLUORANTHENE** | 3100 | 1.2 | | ND | | ND | |
| | **PYRENE** | 2300 | 0.91 | | ND | | ND | |
| | **BENZO(A)ANTHRACENE** | .87 | 0.59 | | ND | | ND | |
| | **BENZO(B)FLUORANTHENE** | .87 | 0.60 | | ND | | ND | |
| | **CHRYSENE** | 87 | 0.55 | | ND | | ND | |
| | **BENZO(K)FLUORANTHENE** | 8.7 | ND | | ND | | ND | |

Notes:

* "> CAL" equals "X" when reported value is above characterization action level for this locale.
J flag - Numerical value is an estimated quantity.
ND indicates Non-Detect
Blank cells in result column indicate an analysis was not performed for that analyte.

Date generated: November 20, 2000

# Table 4-3
# Summary of Analytical Results

| | | | | | | | | |
|---|---|---|---|---|---|---|---|---|
| | | PRA | | | | | | |
| | | PRA Description | | | | | | |
| | | Sample Type | | | | | | |
| | | Sample Id | **BRK-FSS041-40001** | | **BRK-FSS042-40001** | | **BRK-FSS043-40001** | |
| | | Depth - ft bgs | **0 - 1** | | **0 - 1** | | **0 - 1** | |
| | | Collected Date | **06/14/00** | | **06/14/00** | | **06/14/00** | |
| | | Laboratory | **Lancaster Laboratories** | | **Lancaster Laboratories** | | **Lancaster Laboratories** | |
| | | Sample Collector | **IT Corporation (Fluor Daniel/GTI** | | **IT Corporation (Fluor Daniel/GTI** | | **IT Corporation (Fluor Daniel/GTI** | |
| | | Result Units | **MG/KG** | | **MG/KG** | | **MG/KG** | |
| Category | Analyte | Action Level | **Result Flag** | **> CAL*** | **Result Flag** | **> CAL*** | **Result Flag** | **> CAL*** |
| | **BENZO(A)PYRENE** | .087 | 0.47 | X | ND | | ND | |
| | **DIBENZO(A,H)ANTHRACENE** | .087 | ND | | ND | | ND | |
| | **BENZO(G,H,I)PERYLENE** | 2300 | ND | | ND | | ND | |
| | **INDENO(1,2,3-CD)PYRENE** | .87 | ND | | ND | | ND | |
| **P/PCB** | **AROCLOR-1254** | 1 | 0.10 | | ND | | ND | |
| **METAL** | **BARIUM, TOTAL** | 5500 | 225 | | 126 | | 187 | |
| | **BERYLLIUM, TOTAL** | 160 | ND | | ND | | ND | |
| | **CADMIUM, TOTAL** | 39 | ND | | ND | | ND | |
| | **CHROMIUM, TOTAL** | 230 | 18.3 | | 20.5 | | 21.6 | |
| | **LEAD, TOTAL** | 400 | ND | | ND | | 24.4 | |
| | **NICKEL, TOTAL** | 1600 | 19.1 | | 13.7 | | 16.0 | |
| | **MERCURY, TOTAL** | 20 | ND | | ND | | ND | |
| | **ARSENIC, TOTAL** | .43 | 13.6 J | X | 11.7 J | X | 18.0 J | X |

Notes:

* "> CAL" equals "X" when reported value is above characterization action level for this locale.
J flag - Numerical value is an estimated quantity.
ND indicates Non-Detect
Blank cells in result column indicate an analysis was not performed for that analyte.

Date generated: November 20, 2000

# Table 4-3
# Summary of Analytical Results

| | | | | | | | | |
|---|---|---|---|---|---|---|---|---|
| | | PRA | 17 | | | | | |
| | | PRA Description | DEHY PLANT | | | | | |
| | | Sample Type | Normal Sample | | | | | |
| | | Sample Id | BRK-FSB014-70001 | | BRK-FSB014-70002 | | BRK-FSB014-70003 | |
| | | Depth - ft bgs | 0 - 1 | | 2 - 2.5 | | 3.5 - 4 | |
| | | Collected Date | 06/15/00 | | 06/15/00 | | 06/15/00 | |
| | | Laboratory | Lancaster Laboratories | | Lancaster Laboratories | | Lancaster Laboratories | |
| | | Sample Collector | IT Corporation (Fluor Daniel/GTI | | IT Corporation (Fluor Daniel/GTI | | IT Corporation (Fluor Daniel/GTI | |
| | | Result Units | MG/KG | | MG/KG | | MG/KG | |
| Category | Analyte | Action Level | Result Flag | > CAL* | Result Flag | > CAL* | Result Flag | > CAL* |
| VOA | BENZENE | 12 | ND | | | | ND | |
| | TOLUENE | 16000 | ND | | | | ND | |
| | ETHYLBENZENE | 7800 | ND | | | | ND | |
| | XYLENE (TOTAL) | 160000 | ND | | | | ND | |
| | METHYLENE CHLORIDE | 85 | | | | | | |
| | ACETONE | 7800 | | | | | | |
| BNA | NAPHTHALENE | 1600 | | | | | | |
| | ACENAPHTHENE | 4700 | | | | | | |
| | FLUORENE | 3100 | | | | | | |
| | PHENANTHRENE | 23000 | | | | | | |
| | ANTHRACENE | 23000 | | | | | | |
| | FLUORANTHENE | 3100 | | | | | | |
| | PYRENE | 2300 | | | | | | |
| | BENZO(A)ANTHRACENE | .87 | | | | | | |
| | BENZO(B)FLUORANTHENE | .87 | | | | | | |
| | CHRYSENE | 87 | | | | | | |
| | BENZO(K)FLUORANTHENE | 8.7 | | | | | | |

Notes:

* "> CAL" equals "X" when reported value is above characterization action level for this locale.
J flag - Numerical value is an estimated quantity.
ND indicates Non-Detect
Blank cells in result column indicate an analysis was not performed for that analyte.

Date generated: November 20, 2000

# Table 4-3
## Summary of Analytical Results

| | | | | | | | | |
|---|---|---|---|---|---|---|---|---|
| | | PRA | 17 | | | | | |
| | | PRA Description | DEHY PLANT | | | | | |
| | | Sample Type | Normal Sample | | | | | |
| | | Sample Id | BRK-FSB014-70001 | | BRK-FSB014-70002 | | BRK-FSB014-70003 | |
| | | Depth - ft bgs | 0 - 1 | | 2 - 2.5 | | 3.5 - 4 | |
| | | Collected Date | 06/15/00 | | 06/15/00 | | 06/15/00 | |
| | | Laboratory | Lancaster Laboratories | | Lancaster Laboratories | | Lancaster Laboratories | |
| | | Sample Collector | IT Corporation (Fluor Daniel/GTI | | IT Corporation (Fluor Daniel/GTI | | IT Corporation (Fluor Daniel/GTI | |
| | | Result Units | MG/KG | | MG/KG | | MG/KG | |
| Category | Analyte | Action Level | Result Flag | > CAL* | Result Flag | > CAL* | Result Flag | > CAL* |
| | BENZO(A)PYRENE | .087 | | | | | | |
| | DIBENZO(A,H)ANTHRACENE | .087 | | | | | | |
| | BENZO(G,H,I)PERYLENE | 2300 | | | | | | |
| | INDENO(1,2,3-CD)PYRENE | .87 | | | | | | |
| P/PCB | AROCLOR-1254 | 1 | ND | | ND | | ND | |
| METAL | BARIUM, TOTAL | 5500 | | | | | | |
| | BERYLLIUM, TOTAL | 160 | | | | | | |
| | CADMIUM, TOTAL | 39 | | | | | | |
| | CHROMIUM, TOTAL | 230 | | | | | | |
| | LEAD, TOTAL | 400 | | | | | | |
| | NICKEL, TOTAL | 1600 | | | | | | |
| | MERCURY, TOTAL | 20 | | | | | | |
| | ARSENIC, TOTAL | .43 | 9.6 J | X | 12.8 J | X | 14.3 J | X |

Notes:

* "> CAL" equals "X" when reported value is above characterization action level for this locale.
J flag - Numerical value is an estimated quantity.
ND indicates Non-Detect
Blank cells in result column indicate an analysis was not performed for that analyte.

Date generated: November 20, 2000

# Table 4-3
# Summary of Analytical Results

| | | | | | | | | |
|---|---|---|---|---|---|---|---|---|
| | | PRA | | | | | | |
| | | PRA Description | | | | | | |
| | | Sample Type | | | | | | |
| | | Sample Id | **BRK-FSB015-70001** | | **BRK-FSB015-70002** | | **BRK-FSB015-70003** | |
| | | Depth - ft bgs | **0 - 1** | | **2 - 2.5** | | **3.5 - 4** | |
| | | Collected Date | **06/15/00** | | **06/15/00** | | **06/15/00** | |
| | | Laboratory | **Lancaster Laboratories** | | **Lancaster Laboratories** | | **Lancaster Laboratories** | |
| | | Sample Collector | **IT Corporation (Fluor Daniel/GTI** | | **IT Corporation (Fluor Daniel/GTI** | | **IT Corporation (Fluor Daniel/GTI** | |
| | | Result Units | **MG/KG** | | **MG/KG** | | **MG/KG** | |
| Category | Analyte | Action Level | **Result Flag** | **> CAL*** | **Result Flag** | **> CAL*** | **Result Flag** | **> CAL*** |
| **VOA** | **BENZENE** | 12 | ND | | 0.079 | | 0.036 | |
| | **TOLUENE** | 16000 | ND | | 0.008 | | ND | |
| | **ETHYLBENZENE** | 7800 | ND | | 0.067 | | 0.014 | |
| | **XYLENE (TOTAL)** | 160000 | ND | | 0.30 | | 0.082 | |
| | **METHYLENE CHLORIDE** | 85 | | | | | | |
| | **ACETONE** | 7800 | | | | | | |
| **BNA** | **NAPHTHALENE** | 1600 | | | | | | |
| | **ACENAPHTHENE** | 4700 | | | | | | |
| | **FLUORENE** | 3100 | | | | | | |
| | **PHENANTHRENE** | 23000 | | | | | | |
| | **ANTHRACENE** | 23000 | | | | | | |
| | **FLUORANTHENE** | 3100 | | | | | | |
| | **PYRENE** | 2300 | | | | | | |
| | **BENZO(A)ANTHRACENE** | .87 | | | | | | |
| | **BENZO(B)FLUORANTHENE** | .87 | | | | | | |
| | **CHRYSENE** | 87 | | | | | | |
| | **BENZO(K)FLUORANTHENE** | 8.7 | | | | | | |

Notes:

* "> CAL" equals "X" when reported value is above characterization action level for this locale.
J flag - Numerical value is an estimated quantity.
ND indicates Non-Detect
Blank cells in result column indicate an analysis was not performed for that analyte.

Date generated: November 20, 2000

# Table 4-3
# Summary of Analytical Results

| | | | | | | | | |
|---|---|---|---|---|---|---|---|---|
| | | PRA | | | | | | |
| | | PRA Description | | | | | | |
| | | Sample Type | | | | | | |
| | | Sample Id | **BRK-FSB015-70001** | | **BRK-FSB015-70002** | | **BRK-FSB015-70003** | |
| | | Depth - ft bgs | **0 - 1** | | **2 - 2.5** | | **3.5 - 4** | |
| | | Collected Date | **06/15/00** | | **06/15/00** | | **06/15/00** | |
| | | Laboratory | **Lancaster Laboratories** | | **Lancaster Laboratories** | | **Lancaster Laboratories** | |
| | | Sample Collector | **IT Corporation (Fluor Daniel/GTI** | | **IT Corporation (Fluor Daniel/GTI** | | **IT Corporation (Fluor Daniel/GTI** | |
| | | Result Units | **MG/KG** | | **MG/KG** | | **MG/KG** | |
| Category | Analyte | Action Level | **Result Flag** | **> CAL*** | **Result Flag** | **> CAL*** | **Result Flag** | **> CAL*** |
| | **BENZO(A)PYRENE** | .087 | | | | | | |
| | **DIBENZO(A,H)ANTHRACENE** | .087 | | | | | | |
| | **BENZO(G,H,I)PERYLENE** | 2300 | | | | | | |
| | **INDENO(1,2,3-CD)PYRENE** | .87 | | | | | | |
| **P/PCB** | **AROCLOR-1254** | 1 | ND | | ND | | ND | |
| **METAL** | **BARIUM, TOTAL** | 5500 | | | | | | |
| | **BERYLLIUM, TOTAL** | 160 | | | | | | |
| | **CADMIUM, TOTAL** | 39 | | | | | | |
| | **CHROMIUM, TOTAL** | 230 | | | | | | |
| | **LEAD, TOTAL** | 400 | | | | | | |
| | **NICKEL, TOTAL** | 1600 | | | | | | |
| | **MERCURY, TOTAL** | 20 | | | | | | |
| | **ARSENIC, TOTAL** | .43 | 6.0 J | X | 7.6 J | X | 9.2 J | X |

Notes:

* "> CAL" equals "X" when reported value is above characterization action level for this locale.
J flag - Numerical value is an estimated quantity.
ND indicates Non-Detect
Blank cells in result column indicate an analysis was not performed for that analyte.

Date generated: November 20, 2000

# Table 4-3
# Summary of Analytical Results

| | | | | | | | | |
|---|---|---|---|---|---|---|---|---|
| | | PRA | 18 | | | | | |
| | | PRA Description | CONTACTOR (SUCTION) | | | | | |
| | | Sample Type | Normal Sample | | | | | |
| | | Sample Id | BRK-FSB042-70001 | | BRK-FSB042-70002 | | BRK-FSB042-70003 | |
| | | Depth - ft bgs | 0 - 1 | | 2 - 2.5 | | 3.5 - 4 | |
| | | Collected Date | 06/15/00 | | 06/15/00 | | 06/15/00 | |
| | | Laboratory | Lancaster Laboratories | | Lancaster Laboratories | | Lancaster Laboratories | |
| | | Sample Collector | IT Corporation (Fluor Daniel/GTI | | IT Corporation (Fluor Daniel/GTI | | IT Corporation (Fluor Daniel/GTI | |
| | | Result Units | MG/KG | | MG/KG | | MG/KG | |
| Category | Analyte | Action Level | Result Flag | > CAL* | Result Flag | > CAL* | Result Flag | > CAL* |
| VOA | BENZENE | 12 | ND | | ND | | ND | |
| | TOLUENE | 16000 | ND | | ND | | ND | |
| | ETHYLBENZENE | 7800 | ND | | ND | | ND | |
| | XYLENE (TOTAL) | 160000 | ND | | ND | | ND | |
| | METHYLENE CHLORIDE | 85 | | | | | | |
| | ACETONE | 7800 | | | | | | |
| BNA | NAPHTHALENE | 1600 | | | | | | |
| | ACENAPHTHENE | 4700 | | | | | | |
| | FLUORENE | 3100 | | | | | | |
| | PHENANTHRENE | 23000 | | | | | | |
| | ANTHRACENE | 23000 | | | | | | |
| | FLUORANTHENE | 3100 | | | | | | |
| | PYRENE | 2300 | | | | | | |
| | BENZO(A)ANTHRACENE | .87 | | | | | | |
| | BENZO(B)FLUORANTHENE | .87 | | | | | | |
| | CHRYSENE | 87 | | | | | | |
| | BENZO(K)FLUORANTHENE | 8.7 | | | | | | |

Notes:

* "> CAL" equals "X" when reported value is above characterization action level for this locale.
J flag - Numerical value is an estimated quantity.
ND indicates Non-Detect
Blank cells in result column indicate an analysis was not performed for that analyte.

Date generated: November 20, 2000

# Table 4-3
## Summary of Analytical Results

| | | | | | | | | |
|---|---|---|---|---|---|---|---|---|
| | | PRA | 18 | | | | | |
| | | PRA Description | CONTACTOR (SUCTION) | | | | | |
| | | Sample Type | Normal Sample | | | | | |
| | | Sample Id | BRK-FSB042-70001 | | BRK-FSB042-70002 | | BRK-FSB042-70003 | |
| | | Depth - ft bgs | 0 - 1 | | 2 - 2.5 | | 3.5 - 4 | |
| | | Collected Date | 06/15/00 | | 06/15/00 | | 06/15/00 | |
| | | Laboratory | Lancaster Laboratories | | Lancaster Laboratories | | Lancaster Laboratories | |
| | | Sample Collector | IT Corporation (Fluor Daniel/GTI | | IT Corporation (Fluor Daniel/GTI | | IT Corporation (Fluor Daniel/GTI | |
| | | Result Units | MG/KG | | MG/KG | | MG/KG | |
| Category | Analyte | Action Level | Result Flag | > CAL* | Result Flag | > CAL* | Result Flag | > CAL* |
| | BENZO(A)PYRENE | .087 | | | | | | |
| | DIBENZO(A,H)ANTHRACENE | .087 | | | | | | |
| | BENZO(G,H,I)PERYLENE | 2300 | | | | | | |
| | INDENO(1,2,3-CD)PYRENE | .87 | | | | | | |
| P/PCB | AROCLOR-1254 | 1 | ND | | ND | | ND | |
| METAL | BARIUM, TOTAL | 5500 | | | | | | |
| | BERYLLIUM, TOTAL | 160 | | | | | | |
| | CADMIUM, TOTAL | 39 | | | | | | |
| | CHROMIUM, TOTAL | 230 | | | | | | |
| | LEAD, TOTAL | 400 | | | | | | |
| | NICKEL, TOTAL | 1600 | | | | | | |
| | MERCURY, TOTAL | 20 | | | | | | |
| | ARSENIC, TOTAL | .43 | 9.9 J | X | 11.3 J | X | 18.3 J | X |

Notes:

* "> CAL" equals "X" when reported value is above characterization action level for this locale.
J flag - Numerical value is an estimated quantity.
ND indicates Non-Detect
Blank cells in result column indicate an analysis was not performed for that analyte.

Date generated: November 20, 2000

# Table 4-3
# Summary of Analytical Results

| | | | | | | | | |
|---|---|---|---|---|---|---|---|---|
| | | PRA | | | | | | |
| | | PRA Description | | | | | | |
| | | Sample Type | | | | | | |
| | | Sample Id | **BRK-FSB043-70001** | | **BRK-FSB043-70002** | | **BRK-FSB043-70003** | |
| | | Depth - ft bgs | **0 - 1** | | **2 - 2.5** | | **3 - 3.5** | |
| | | Collected Date | **06/15/00** | | **06/15/00** | | **06/15/00** | |
| | | Laboratory | **Lancaster Laboratories** | | **Lancaster Laboratories** | | **Lancaster Laboratories** | |
| | | Sample Collector | **IT Corporation (Fluor Daniel/GTI** | | **IT Corporation (Fluor Daniel/GTI** | | **IT Corporation (Fluor Daniel/GTI** | |
| | | Result Units | **MG/KG** | | **MG/KG** | | **MG/KG** | |
| Category | Analyte | Action Level | **Result Flag** | **> CAL*** | **Result Flag** | **> CAL*** | **Result Flag** | **> CAL*** |
| **VOA** | **BENZENE** | 12 | ND | | ND | | ND | |
| | **TOLUENE** | 16000 | ND | | ND | | ND | |
| | **ETHYLBENZENE** | 7800 | ND | | ND | | ND | |
| | **XYLENE (TOTAL)** | 160000 | ND | | ND | | ND | |
| | **METHYLENE CHLORIDE** | 85 | | | | | | |
| | **ACETONE** | 7800 | | | | | | |
| **BNA** | **NAPHTHALENE** | 1600 | | | | | | |
| | **ACENAPHTHENE** | 4700 | | | | | | |
| | **FLUORENE** | 3100 | | | | | | |
| | **PHENANTHRENE** | 23000 | | | | | | |
| | **ANTHRACENE** | 23000 | | | | | | |
| | **FLUORANTHENE** | 3100 | | | | | | |
| | **PYRENE** | 2300 | | | | | | |
| | **BENZO(A)ANTHRACENE** | .87 | | | | | | |
| | **BENZO(B)FLUORANTHENE** | .87 | | | | | | |
| | **CHRYSENE** | 87 | | | | | | |
| | **BENZO(K)FLUORANTHENE** | 8.7 | | | | | | |

Notes:

* "> CAL" equals "X" when reported value is above characterization action level for this locale.
J flag - Numerical value is an estimated quantity.
ND indicates Non-Detect
Blank cells in result column indicate an analysis was not performed for that analyte.

Date generated: November 20, 2000

# Table 4-3
# Summary of Analytical Results

| | | | | | | | | |
|---|---|---|---|---|---|---|---|---|
| | | PRA | | | | | | |
| | | PRA Description | | | | | | |
| | | Sample Type | | | | | | |
| | | Sample Id | **BRK-FSB043-70001** | | **BRK-FSB043-70002** | | **BRK-FSB043-70003** | |
| | | Depth - ft bgs | **0 - 1** | | **2 - 2.5** | | **3 - 3.5** | |
| | | Collected Date | **06/15/00** | | **06/15/00** | | **06/15/00** | |
| | | Laboratory | **Lancaster Laboratories** | | **Lancaster Laboratories** | | **Lancaster Laboratories** | |
| | | Sample Collector | **IT Corporation (Fluor Daniel/GTI** | | **IT Corporation (Fluor Daniel/GTI** | | **IT Corporation (Fluor Daniel/GTI** | |
| | | Result Units | **MG/KG** | | **MG/KG** | | **MG/KG** | |
| Category | Analyte | Action Level | **Result Flag** | **> CAL*** | **Result Flag** | **> CAL*** | **Result Flag** | **> CAL*** |
| | **BENZO(A)PYRENE** | .087 | | | | | | |
| | **DIBENZO(A,H)ANTHRACENE** | .087 | | | | | | |
| | **BENZO(G,H,I)PERYLENE** | 2300 | | | | | | |
| | **INDENO(1,2,3-CD)PYRENE** | .87 | | | | | | |
| **P/PCB** | **AROCLOR-1254** | 1 | 0.52 | | ND | | 0.053 | |
| **METAL** | **BARIUM, TOTAL** | 5500 | | | | | | |
| | **BERYLLIUM, TOTAL** | 160 | | | | | | |
| | **CADMIUM, TOTAL** | 39 | | | | | | |
| | **CHROMIUM, TOTAL** | 230 | | | | | | |
| | **LEAD, TOTAL** | 400 | | | | | | |
| | **NICKEL, TOTAL** | 1600 | | | | | | |
| | **MERCURY, TOTAL** | 20 | | | | | | |
| | **ARSENIC, TOTAL** | .43 | 5.6 J | X | 8.6 J | X | 9.3 J | X |

Notes:

* "> CAL" equals "X" when reported value is above characterization action level for this locale.
J flag - Numerical value is an estimated quantity.
ND indicates Non-Detect
Blank cells in result column indicate an analysis was not performed for that analyte.

Date generated: November 20, 2000

# Table 4-3
## Summary of Analytical Results

| | | | | | | | | |
|---|---|---|---|---|---|---|---|---|
| | | PRA | 19 | | | | | |
| | | PRA Description | CONTACTOR (DISCHARGE) | | | | | |
| | | Sample Type | Normal Sample | | | | | |
| | | Sample Id | BRK-FSB044-70001 | | BRK-FSB044-70002 | | BRK-FSB044-70003 | |
| | | Depth - ft bgs | 0 - 1 | | 2 - 2.5 | | 3.5 - 4 | |
| | | Collected Date | 06/15/00 | | 06/15/00 | | 06/15/00 | |
| | | Laboratory | Lancaster Laboratories | | Lancaster Laboratories | | Lancaster Laboratories | |
| | | Sample Collector | IT Corporation (Fluor Daniel/GTI | | IT Corporation (Fluor Daniel/GTI | | IT Corporation (Fluor Daniel/GTI | |
| | | Result Units | MG/KG | | MG/KG | | MG/KG | |
| Category | Analyte | Action Level | Result Flag | > CAL* | Result Flag | > CAL* | Result Flag | > CAL* |
| VOA | BENZENE | 12 | ND | | ND | | ND | |
| | TOLUENE | 16000 | ND | | ND | | ND | |
| | ETHYLBENZENE | 7800 | ND | | ND | | ND | |
| | XYLENE (TOTAL) | 160000 | ND | | ND | | ND | |
| | METHYLENE CHLORIDE | 85 | | | | | | |
| | ACETONE | 7800 | | | | | | |
| BNA | NAPHTHALENE | 1600 | | | | | | |
| | ACENAPHTHENE | 4700 | | | | | | |
| | FLUORENE | 3100 | | | | | | |
| | PHENANTHRENE | 23000 | | | | | | |
| | ANTHRACENE | 23000 | | | | | | |
| | FLUORANTHENE | 3100 | | | | | | |
| | PYRENE | 2300 | | | | | | |
| | BENZO(A)ANTHRACENE | .87 | | | | | | |
| | BENZO(B)FLUORANTHENE | .87 | | | | | | |
| | CHRYSENE | 87 | | | | | | |
| | BENZO(K)FLUORANTHENE | 8.7 | | | | | | |

Notes:

* "> CAL" equals "X" when reported value is above characterization action level for this locale.
J flag - Numerical value is an estimated quantity.
ND indicates Non-Detect
Blank cells in result column indicate an analysis was not performed for that analyte.

Date generated: November 20, 2000

# Table 4-3
## Summary of Analytical Results

| | | | | | | | | |
|---|---|---|---|---|---|---|---|---|
| | | PRA | 19 | | | | | |
| | | PRA Description | CONTACTOR (DISCHARGE) | | | | | |
| | | Sample Type | Normal Sample | | | | | |
| | | Sample Id | BRK-FSB044-70001 | | BRK-FSB044-70002 | | BRK-FSB044-70003 | |
| | | Depth - ft bgs | 0 - 1 | | 2 - 2.5 | | 3.5 - 4 | |
| | | Collected Date | 06/15/00 | | 06/15/00 | | 06/15/00 | |
| | | Laboratory | Lancaster Laboratories | | Lancaster Laboratories | | Lancaster Laboratories | |
| | | Sample Collector | IT Corporation (Fluor Daniel/GTI | | IT Corporation (Fluor Daniel/GTI | | IT Corporation (Fluor Daniel/GTI | |
| | | Result Units | MG/KG | | MG/KG | | MG/KG | |
| Category | Analyte | Action Level | Result Flag | > CAL* | Result Flag | > CAL* | Result Flag | > CAL* |
| | BENZO(A)PYRENE | .087 | | | | | | |
| | DIBENZO(A,H)ANTHRACENE | .087 | | | | | | |
| | BENZO(G,H,I)PERYLENE | 2300 | | | | | | |
| | INDENO(1,2,3-CD)PYRENE | .87 | | | | | | |
| P/PCB | AROCLOR-1254 | 1 | ND | | ND | | ND | |
| METAL | BARIUM, TOTAL | 5500 | | | | | | |
| | BERYLLIUM, TOTAL | 160 | | | | | | |
| | CADMIUM, TOTAL | 39 | | | | | | |
| | CHROMIUM, TOTAL | 230 | | | | | | |
| | LEAD, TOTAL | 400 | | | | | | |
| | NICKEL, TOTAL | 1600 | | | | | | |
| | MERCURY, TOTAL | 20 | | | | | | |
| | ARSENIC, TOTAL | .43 | 13.6 J | X | 28.4 J | X | 11.7 J | X |

Notes:

* "> CAL" equals "X" when reported value is above characterization action level for this locale.
J flag - Numerical value is an estimated quantity.
ND indicates Non-Detect
Blank cells in result column indicate an analysis was not performed for that analyte.

Date generated: November 20, 2000

# Table 4-3
# Summary of Analytical Results

| | | | | | | | | |
|---|---|---|---|---|---|---|---|---|
| | | PRA | | | | | | |
| | | PRA Description | | | | | | |
| | | Sample Type | | | | | | |
| | | Sample Id | **BRK-FSB045-70001** | | **BRK-FSB045-70002** | | **BRK-FSB045-70003** | |
| | | Depth - ft bgs | **0 - 1** | | **2 - 2.5** | | **3.5 - 4** | |
| | | Collected Date | **06/15/00** | | **06/15/00** | | **06/15/00** | |
| | | Laboratory | **Lancaster Laboratories** | | **Lancaster Laboratories** | | **Lancaster Laboratories** | |
| | | Sample Collector | **IT Corporation (Fluor Daniel/GTI** | | **IT Corporation (Fluor Daniel/GTI** | | **IT Corporation (Fluor Daniel/GTI** | |
| | | Result Units | **MG/KG** | | **MG/KG** | | **MG/KG** | |
| Category | Analyte | Action Level | **Result Flag** | **> CAL*** | **Result Flag** | **> CAL*** | **Result Flag** | **> CAL*** |
| **VOA** | **BENZENE** | 12 | ND | | ND | | ND | |
| | **TOLUENE** | 16000 | ND | | ND | | ND | |
| | **ETHYLBENZENE** | 7800 | ND | | ND | | ND | |
| | **XYLENE (TOTAL)** | 160000 | ND | | ND | | ND | |
| | **METHYLENE CHLORIDE** | 85 | | | | | | |
| | **ACETONE** | 7800 | | | | | | |
| **BNA** | **NAPHTHALENE** | 1600 | | | | | | |
| | **ACENAPHTHENE** | 4700 | | | | | | |
| | **FLUORENE** | 3100 | | | | | | |
| | **PHENANTHRENE** | 23000 | | | | | | |
| | **ANTHRACENE** | 23000 | | | | | | |
| | **FLUORANTHENE** | 3100 | | | | | | |
| | **PYRENE** | 2300 | | | | | | |
| | **BENZO(A)ANTHRACENE** | .87 | | | | | | |
| | **BENZO(B)FLUORANTHENE** | .87 | | | | | | |
| | **CHRYSENE** | 87 | | | | | | |
| | **BENZO(K)FLUORANTHENE** | 8.7 | | | | | | |

Notes:

* "> CAL" equals "X" when reported value is above characterization action level for this locale.
J flag - Numerical value is an estimated quantity.
ND indicates Non-Detect
Blank cells in result column indicate an analysis was not performed for that analyte.

Date generated: November 20, 2000

# Table 4-3
# Summary of Analytical Results

| | | | | | | | | |
|---|---|---|---|---|---|---|---|---|
| | | PRA | | | | | | |
| | | PRA Description | | | | | | |
| | | Sample Type | | | | | | |
| | | Sample Id | **BRK-FSB045-70001** | | **BRK-FSB045-70002** | | **BRK-FSB045-70003** | |
| | | Depth - ft bgs | **0 - 1** | | **2 - 2.5** | | **3.5 - 4** | |
| | | Collected Date | **06/15/00** | | **06/15/00** | | **06/15/00** | |
| | | Laboratory | **Lancaster Laboratories** | | **Lancaster Laboratories** | | **Lancaster Laboratories** | |
| | | Sample Collector | **IT Corporation (Fluor Daniel/GTI** | | **IT Corporation (Fluor Daniel/GTI** | | **IT Corporation (Fluor Daniel/GTI** | |
| | | Result Units | **MG/KG** | | **MG/KG** | | **MG/KG** | |
| Category | Analyte | Action Level | **Result Flag** | **> CAL*** | **Result Flag** | **> CAL*** | **Result Flag** | **> CAL*** |
| | **BENZO(A)PYRENE** | .087 | | | | | | |
| | **DIBENZO(A,H)ANTHRACENE** | .087 | | | | | | |
| | **BENZO(G,H,I)PERYLENE** | 2300 | | | | | | |
| | **INDENO(1,2,3-CD)PYRENE** | .87 | | | | | | |
| **P/PCB** | **AROCLOR-1254** | 1 | ND | | ND | | ND | |
| **METAL** | **BARIUM, TOTAL** | 5500 | | | | | | |
| | **BERYLLIUM, TOTAL** | 160 | | | | | | |
| | **CADMIUM, TOTAL** | 39 | | | | | | |
| | **CHROMIUM, TOTAL** | 230 | | | | | | |
| | **LEAD, TOTAL** | 400 | | | | | | |
| | **NICKEL, TOTAL** | 1600 | | | | | | |
| | **MERCURY, TOTAL** | 20 | | | | | | |
| | **ARSENIC, TOTAL** | .43 | 8.9 J | X | 7.6 J | X | 9.8 J | X |

Notes:

* "> CAL" equals "X" when reported value is above characterization action level for this locale.
J flag - Numerical value is an estimated quantity.
ND indicates Non-Detect
Blank cells in result column indicate an analysis was not performed for that analyte.

Date generated: November 20, 2000

# Table 4-3
# Summary of Analytical Results

| | | | | | | | | |
|---|---|---|---|---|---|---|---|---|
| | | PRA | 20 | | | | | |
| | | PRA Description | SCRUBBERS | | | | | |
| | | Sample Type | Normal Sample | | | | | |
| | | Sample Id | BRK-FSB046-70001 | | BRK-FSB046-70002 | | BRK-FSB046-70003 | |
| | | Depth - ft bgs | 0 - 1 | | 2 - 2.5 | | 3.5 - 4 | |
| | | Collected Date | 06/14/00 | | 06/14/00 | | 06/14/00 | |
| | | Laboratory | Lancaster Laboratories | | Lancaster Laboratories | | Lancaster Laboratories | |
| | | Sample Collector | IT Corporation (Fluor Daniel/GTI | | IT Corporation (Fluor Daniel/GTI | | IT Corporation (Fluor Daniel/GTI | |
| | | Result Units | MG/KG | | MG/KG | | MG/KG | |
| Category | Analyte | Action Level | Result Flag | > CAL* | Result Flag | > CAL* | Result Flag | > CAL* |
| VOA | BENZENE | 12 | ND | | ND | | ND | |
| | TOLUENE | 16000 | ND | | ND | | ND | |
| | ETHYLBENZENE | 7800 | ND | | ND | | ND | |
| | XYLENE (TOTAL) | 160000 | ND | | ND | | ND | |
| | METHYLENE CHLORIDE | 85 | | | | | | |
| | ACETONE | 7800 | | | | | | |
| BNA | NAPHTHALENE | 1600 | | | | | | |
| | ACENAPHTHENE | 4700 | | | | | | |
| | FLUORENE | 3100 | | | | | | |
| | PHENANTHRENE | 23000 | | | | | | |
| | ANTHRACENE | 23000 | | | | | | |
| | FLUORANTHENE | 3100 | | | | | | |
| | PYRENE | 2300 | | | | | | |
| | BENZO(A)ANTHRACENE | .87 | | | | | | |
| | BENZO(B)FLUORANTHENE | .87 | | | | | | |
| | CHRYSENE | 87 | | | | | | |
| | BENZO(K)FLUORANTHENE | 8.7 | | | | | | |

Notes:

* "> CAL" equals "X" when reported value is above characterization action level for this locale.
J flag - Numerical value is an estimated quantity.
ND indicates Non-Detect
Blank cells in result column indicate an analysis was not performed for that analyte.

Date generated: November 20, 2000

# Table 4-3
## Summary of Analytical Results

| | | | | | | | | |
|---|---|---|---|---|---|---|---|---|
| | | PRA | 20 | | | | | |
| | | PRA Description | SCRUBBERS | | | | | |
| | | Sample Type | Normal Sample | | | | | |
| | | Sample Id | BRK-FSB046-70001 | | BRK-FSB046-70002 | | BRK-FSB046-70003 | |
| | | Depth - ft bgs | 0 - 1 | | 2 - 2.5 | | 3.5 - 4 | |
| | | Collected Date | 06/14/00 | | 06/14/00 | | 06/14/00 | |
| | | Laboratory | Lancaster Laboratories | | Lancaster Laboratories | | Lancaster Laboratories | |
| | | Sample Collector | IT Corporation (Fluor Daniel/GTI | | IT Corporation (Fluor Daniel/GTI | | IT Corporation (Fluor Daniel/GTI | |
| | | Result Units | MG/KG | | MG/KG | | MG/KG | |
| Category | Analyte | Action Level | Result Flag | > CAL* | Result Flag | > CAL* | Result Flag | > CAL* |
| | BENZO(A)PYRENE | .087 | | | | | | |
| | DIBENZO(A,H)ANTHRACENE | .087 | | | | | | |
| | BENZO(G,H,I)PERYLENE | 2300 | | | | | | |
| | INDENO(1,2,3-CD)PYRENE | .87 | | | | | | |
| P/PCB | AROCLOR-1254 | 1 | 0.43 | | ND | | ND | |
| METAL | BARIUM, TOTAL | 5500 | | | | | | |
| | BERYLLIUM, TOTAL | 160 | | | | | | |
| | CADMIUM, TOTAL | 39 | | | | | | |
| | CHROMIUM, TOTAL | 230 | | | | | | |
| | LEAD, TOTAL | 400 | | | | | | |
| | NICKEL, TOTAL | 1600 | | | | | | |
| | MERCURY, TOTAL | 20 | | | | | | |
| | ARSENIC, TOTAL | .43 | 12.0 J | X | 14.7 J | X | 14.4 J | X |

Notes:

* "> CAL" equals "X" when reported value is above characterization action level for this locale.
J flag - Numerical value is an estimated quantity.
ND indicates Non-Detect
Blank cells in result column indicate an analysis was not performed for that analyte.

Date generated: November 20, 2000

# Table 4-3
# Summary of Analytical Results

| | | | | | | | | |
|---|---|---|---|---|---|---|---|---|
| | | PRA | | | | | | |
| | | PRA Description | | | | | | |
| | | Sample Type | | | | | | |
| | | Sample Id | **BRK-FSB047-70001** | | **BRK-FSB047-70002** | | **BRK-FSB047-70003** | |
| | | Depth - ft bgs | **0 - 1** | | **2 - 2.5** | | **3.5 - 4** | |
| | | Collected Date | **06/14/00** | | **06/14/00** | | **06/14/00** | |
| | | Laboratory | **Lancaster Laboratories** | | **Lancaster Laboratories** | | **Lancaster Laboratories** | |
| | | Sample Collector | **IT Corporation (Fluor Daniel/GTI** | | **IT Corporation (Fluor Daniel/GTI** | | **IT Corporation (Fluor Daniel/GTI** | |
| | | Result Units | **MG/KG** | | **MG/KG** | | **MG/KG** | |
| Category | Analyte | Action Level | **Result Flag** | **> CAL*** | **Result Flag** | **> CAL*** | **Result Flag** | **> CAL*** |
| **VOA** | **BENZENE** | 12 | ND | | ND | | ND | |
| | **TOLUENE** | 16000 | ND | | ND | | ND | |
| | **ETHYLBENZENE** | 7800 | ND | | ND | | ND | |
| | **XYLENE (TOTAL)** | 160000 | ND | | ND | | ND | |
| | **METHYLENE CHLORIDE** | 85 | | | | | | |
| | **ACETONE** | 7800 | | | | | | |
| **BNA** | **NAPHTHALENE** | 1600 | | | | | | |
| | **ACENAPHTHENE** | 4700 | | | | | | |
| | **FLUORENE** | 3100 | | | | | | |
| | **PHENANTHRENE** | 23000 | | | | | | |
| | **ANTHRACENE** | 23000 | | | | | | |
| | **FLUORANTHENE** | 3100 | | | | | | |
| | **PYRENE** | 2300 | | | | | | |
| | **BENZO(A)ANTHRACENE** | .87 | | | | | | |
| | **BENZO(B)FLUORANTHENE** | .87 | | | | | | |
| | **CHRYSENE** | 87 | | | | | | |
| | **BENZO(K)FLUORANTHENE** | 8.7 | | | | | | |

Notes:

* "> CAL" equals "X" when reported value is above characterization action level for this locale.
J flag - Numerical value is an estimated quantity.
ND indicates Non-Detect
Blank cells in result column indicate an analysis was not performed for that analyte.

Date generated: November 20, 2000

# Table 4-3
# Summary of Analytical Results

| | | | | | | | | |
|---|---|---|---|---|---|---|---|---|
| | | PRA | | | | | | |
| | | PRA Description | | | | | | |
| | | Sample Type | | | | | | |
| | | Sample Id | **BRK-FSB047-70001** | | **BRK-FSB047-70002** | | **BRK-FSB047-70003** | |
| | | Depth - ft bgs | **0 - 1** | | **2 - 2.5** | | **3.5 - 4** | |
| | | Collected Date | **06/14/00** | | **06/14/00** | | **06/14/00** | |
| | | Laboratory | **Lancaster Laboratories** | | **Lancaster Laboratories** | | **Lancaster Laboratories** | |
| | | Sample Collector | **IT Corporation (Fluor Daniel/GTI** | | **IT Corporation (Fluor Daniel/GTI** | | **IT Corporation (Fluor Daniel/GTI** | |
| | | Result Units | **MG/KG** | | **MG/KG** | | **MG/KG** | |
| Category | Analyte | Action Level | **Result Flag** | **> CAL*** | **Result Flag** | **> CAL*** | **Result Flag** | **> CAL*** |
| | **BENZO(A)PYRENE** | .087 | | | | | | |
| | **DIBENZO(A,H)ANTHRACENE** | .087 | | | | | | |
| | **BENZO(G,H,I)PERYLENE** | 2300 | | | | | | |
| | **INDENO(1,2,3-CD)PYRENE** | .87 | | | | | | |
| **P/PCB** | **AROCLOR-1254** | 1 | ND | | ND | | ND | |
| **METAL** | **BARIUM, TOTAL** | 5500 | | | | | | |
| | **BERYLLIUM, TOTAL** | 160 | | | | | | |
| | **CADMIUM, TOTAL** | 39 | | | | | | |
| | **CHROMIUM, TOTAL** | 230 | | | | | | |
| | **LEAD, TOTAL** | 400 | | | | | | |
| | **NICKEL, TOTAL** | 1600 | | | | | | |
| | **MERCURY, TOTAL** | 20 | | | | | | |
| | **ARSENIC, TOTAL** | .43 | 9.5 J | X | 8.0 J | X | 12.0 J | X |

Notes:

* "> CAL" equals "X" when reported value is above characterization action level for this locale.
J flag - Numerical value is an estimated quantity.
ND indicates Non-Detect
Blank cells in result column indicate an analysis was not performed for that analyte.

Date generated: November 20, 2000

# Table 4-3
# Summary of Analytical Results

| | | | | | | | | |
|---|---|---|---|---|---|---|---|---|
| | | PRA | 21 | | | | | |
| | | PRA Description | USED OIL UNLOADING CONNECTION | | | | | |
| | | Sample Type | Normal Sample | | | | | |
| | | Sample Id | BRK-FSB021-70001 | | BRK-FSB021-70002 | | BRK-FSB021-70003 | |
| | | Depth - ft bgs | 0 - 1 | | 2 - 2.5 | | 3.5 - 4 | |
| | | Collected Date | 06/14/00 | | 06/14/00 | | 06/14/00 | |
| | | Laboratory | Lancaster Laboratories | | Lancaster Laboratories | | Lancaster Laboratories | |
| | | Sample Collector | IT Corporation (Fluor Daniel/GTI | | IT Corporation (Fluor Daniel/GTI | | IT Corporation (Fluor Daniel/GTI | |
| | | Result Units | MG/KG | | MG/KG | | MG/KG | |
| Category | Analyte | Action Level | Result Flag | > CAL* | Result Flag | > CAL* | Result Flag | > CAL* |
| VOA | BENZENE | 12 | ND | | ND | | ND | |
| | TOLUENE | 16000 | ND | | ND | | ND | |
| | ETHYLBENZENE | 7800 | ND | | ND | | ND | |
| | XYLENE (TOTAL) | 160000 | ND | | ND | | ND | |
| | METHYLENE CHLORIDE | 85 | | | | | | |
| | ACETONE | 7800 | | | | | | |
| BNA | NAPHTHALENE | 1600 | ND | | ND | | ND | |
| | ACENAPHTHENE | 4700 | ND | | ND | | ND | |
| | FLUORENE | 3100 | ND | | ND | | ND | |
| | PHENANTHRENE | 23000 | ND | | ND | | ND | |
| | ANTHRACENE | 23000 | ND | | ND | | ND | |
| | FLUORANTHENE | 3100 | ND | | ND | | ND | |
| | PYRENE | 2300 | ND | | ND | | ND | |
| | BENZO(A)ANTHRACENE | .87 | ND | | ND | | ND | |
| | BENZO(B)FLUORANTHENE | .87 | ND | | ND | | ND | |
| | CHRYSENE | 87 | ND | | ND | | ND | |
| | BENZO(K)FLUORANTHENE | 8.7 | ND | | ND | | ND | |

Notes:

* "> CAL" equals "X" when reported value is above characterization action level for this locale.
J flag - Numerical value is an estimated quantity.
ND indicates Non-Detect
Blank cells in result column indicate an analysis was not performed for that analyte.

Date generated: November 20, 2000

# Table 4-3
# Summary of Analytical Results

| | | | | | | | | |
|---|---|---|---|---|---|---|---|---|
| | | PRA | 21 | | | | | |
| | | PRA Description | USED OIL UNLOADING CONNECTION | | | | | |
| | | Sample Type | Normal Sample | | | | | |
| | | Sample Id | BRK-FSB021-70001 | | BRK-FSB021-70002 | | BRK-FSB021-70003 | |
| | | Depth - ft bgs | 0 - 1 | | 2 - 2.5 | | 3.5 - 4 | |
| | | Collected Date | 06/14/00 | | 06/14/00 | | 06/14/00 | |
| | | Laboratory | Lancaster Laboratories | | Lancaster Laboratories | | Lancaster Laboratories | |
| | | Sample Collector | IT Corporation (Fluor Daniel/GTI | | IT Corporation (Fluor Daniel/GTI | | IT Corporation (Fluor Daniel/GTI | |
| | | Result Units | MG/KG | | MG/KG | | MG/KG | |
| Category | Analyte | Action Level | Result Flag | > CAL* | Result Flag | > CAL* | Result Flag | > CAL* |
| | BENZO(A)PYRENE | .087 | ND | | ND | | ND | |
| | DIBENZO(A,H)ANTHRACENE | .087 | ND | | ND | | ND | |
| | BENZO(G,H,I)PERYLENE | 2300 | ND | | ND | | ND | |
| | INDENO(1,2,3-CD)PYRENE | .87 | ND | | ND | | ND | |
| P/PCB | AROCLOR-1254 | 1 | 0.038 | | ND | | ND | |
| METAL | BARIUM, TOTAL | 5500 | | | | | | |
| | BERYLLIUM, TOTAL | 160 | | | | | | |
| | CADMIUM, TOTAL | 39 | | | | | | |
| | CHROMIUM, TOTAL | 230 | | | | | | |
| | LEAD, TOTAL | 400 | ND | | ND | | ND | |
| | NICKEL, TOTAL | 1600 | | | | | | |
| | MERCURY, TOTAL | 20 | | | | | | |
| | ARSENIC, TOTAL | .43 | | | | | | |

Notes:

* "> CAL" equals "X" when reported value is above characterization action level for this locale.
J flag - Numerical value is an estimated quantity.
ND indicates Non-Detect
Blank cells in result column indicate an analysis was not performed for that analyte.

Date generated: November 20, 2000

# Table 4-3
## Summary of Analytical Results

| | | | | | | | | |
|---|---|---|---|---|---|---|---|---|
| | | PRA | 22 | | | | | |
| | | PRA Description | AREA WITH VISIBLE STAINING AND BLOWOFFS | | | | | |
| | | Sample Type | Normal Sample | | | | | |
| | | Sample Id | BRK-FSB022-70001 | | BRK-FSB022-70002 | | BRK-FSB023-70001 | |
| | | Depth - ft bgs | 0 - 1 | | 2.5 - 3 | | 0 - 1 | |
| | | Collected Date | 06/16/00 | | 06/16/00 | | 06/16/00 | |
| | | Laboratory | Lancaster Laboratories | | Lancaster Laboratories | | Lancaster Laboratories | |
| | | Sample Collector | IT Corporation (Fluor Daniel/GTI | | IT Corporation (Fluor Daniel/GTI | | IT Corporation (Fluor Daniel/GTI | |
| | | Result Units | MG/KG | | MG/KG | | MG/KG | |
| Category | Analyte | Action Level | Result Flag | > CAL* | Result Flag | > CAL* | Result Flag | > CAL* |
| VOA | BENZENE | 12 | ND | | ND | | ND | |
| | TOLUENE | 16000 | ND | | ND | | ND | |
| | ETHYLBENZENE | 7800 | ND | | ND | | ND | |
| | XYLENE (TOTAL) | 160000 | ND | | ND | | ND | |
| | METHYLENE CHLORIDE | 85 | ND | | ND | | ND | |
| | ACETONE | 7800 | ND | | ND | | ND | |
| BNA | NAPHTHALENE | 1600 | ND | | ND | | ND | |
| | ACENAPHTHENE | 4700 | ND | | ND | | ND | |
| | FLUORENE | 3100 | ND | | ND | | ND | |
| | PHENANTHRENE | 23000 | ND | | ND | | ND | |
| | ANTHRACENE | 23000 | ND | | ND | | ND | |
| | FLUORANTHENE | 3100 | 0.44 | | ND | | ND | |
| | PYRENE | 2300 | 0.37 | | ND | | ND | |
| | BENZO(A)ANTHRACENE | .87 | ND | | ND | | ND | |
| | BENZO(B)FLUORANTHENE | .87 | ND | | ND | | ND | |
| | CHRYSENE | 87 | ND | | ND | | ND | |
| | BENZO(K)FLUORANTHENE | 8.7 | ND | | ND | | ND | |

Notes:

* "> CAL" equals "X" when reported value is above characterization action level for this locale.
J flag - Numerical value is an estimated quantity.
ND indicates Non-Detect
Blank cells in result column indicate an analysis was not performed for that analyte.

Date generated: November 20, 2000

# Table 4-3
## Summary of Analytical Results

| | | | | | | | | |
|---|---|---|---|---|---|---|---|---|
| | | PRA | 22 | | | | | |
| | | PRA Description | AREA WITH VISIBLE STAINING AND BLOWOFFS | | | | | |
| | | Sample Type | Normal Sample | | | | | |
| | | Sample Id | BRK-FSB022-70001 | | BRK-FSB022-70002 | | BRK-FSB023-70001 | |
| | | Depth - ft bgs | 0 - 1 | | 2.5 - 3 | | 0 - 1 | |
| | | Collected Date | 06/16/00 | | 06/16/00 | | 06/16/00 | |
| | | Laboratory | Lancaster Laboratories | | Lancaster Laboratories | | Lancaster Laboratories | |
| | | Sample Collector | IT Corporation (Fluor Daniel/GTI | | IT Corporation (Fluor Daniel/GTI | | IT Corporation (Fluor Daniel/GTI | |
| | | Result Units | MG/KG | | MG/KG | | MG/KG | |
| Category | Analyte | Action Level | Result Flag | > CAL* | Result Flag | > CAL* | Result Flag | > CAL* |
| | BENZO(A)PYRENE | .087 | ND | | ND | | ND | |
| | DIBENZO(A,H)ANTHRACENE | .087 | ND | | ND | | ND | |
| | BENZO(G,H,I)PERYLENE | 2300 | ND | | ND | | ND | |
| | INDENO(1,2,3-CD)PYRENE | .87 | ND | | ND | | ND | |
| P/PCB | AROCLOR-1254 | 1 | ND | | ND | | ND | |
| METAL | BARIUM, TOTAL | 5500 | 62.5 | | 99.0 | | 73.5 | |
| | BERYLLIUM, TOTAL | 160 | ND | | ND | | ND | |
| | CADMIUM, TOTAL | 39 | ND | | ND | | ND | |
| | CHROMIUM, TOTAL | 230 | 19.4 J | | 15.6 J | | 17.8 J | |
| | LEAD, TOTAL | 400 | ND | | ND | | ND | |
| | NICKEL, TOTAL | 1600 | 16.4 | | 29.6 | | 20.2 | |
| | MERCURY, TOTAL | 20 | ND | | ND | | 0.60 | |
| | ARSENIC, TOTAL | .43 | 7.3 | X | 9.7 | X | 10.0 | X |

Notes:

* "> CAL" equals "X" when reported value is above characterization action level for this locale.
J flag - Numerical value is an estimated quantity.
ND indicates Non-Detect
Blank cells in result column indicate an analysis was not performed for that analyte.

Date generated: November 20, 2000

# Table 4-3
# Summary of Analytical Results

| | | | | | | | | |
|---|---|---|---|---|---|---|---|---|
| | | PRA | | | | | | |
| | | PRA Description | | | | | | |
| | | Sample Type | | | | | | |
| | | Sample Id | **BRK-FSB023-70002** | | **BRK-FSB048-70001** | | **BRK-FSB048-70002** | |
| | | Depth - ft bgs | **2.5 - 3** | | **0 - 1** | | **2.5 - 3** | |
| | | Collected Date | **06/16/00** | | **06/16/00** | | **06/16/00** | |
| | | Laboratory | **Lancaster Laboratories** | | **Lancaster Laboratories** | | **Lancaster Laboratories** | |
| | | Sample Collector | **IT Corporation (Fluor Daniel/GTI** | | **IT Corporation (Fluor Daniel/GTI** | | **IT Corporation (Fluor Daniel/GTI** | |
| | | Result Units | **MG/KG** | | **MG/KG** | | **MG/KG** | |
| Category | Analyte | Action Level | **Result Flag** | **> CAL*** | **Result Flag** | **> CAL*** | **Result Flag** | **> CAL*** |
| **VOA** | **BENZENE** | 12 | ND | | ND | | ND | |
| | **TOLUENE** | 16000 | ND | | ND | | ND | |
| | **ETHYLBENZENE** | 7800 | ND | | ND | | ND | |
| | **XYLENE (TOTAL)** | 160000 | ND | | ND | | ND | |
| | **METHYLENE CHLORIDE** | 85 | ND | | ND | | ND | |
| | **ACETONE** | 7800 | ND | | ND | | ND | |
| **BNA** | **NAPHTHALENE** | 1600 | ND | | ND | | ND | |
| | **ACENAPHTHENE** | 4700 | ND | | ND | | ND | |
| | **FLUORENE** | 3100 | ND | | ND | | ND | |
| | **PHENANTHRENE** | 23000 | ND | | ND | | ND | |
| | **ANTHRACENE** | 23000 | ND | | ND | | ND | |
| | **FLUORANTHENE** | 3100 | ND | | ND | | ND | |
| | **PYRENE** | 2300 | ND | | ND | | ND | |
| | **BENZO(A)ANTHRACENE** | .87 | ND | | ND | | ND | |
| | **BENZO(B)FLUORANTHENE** | .87 | ND | | ND | | ND | |
| | **CHRYSENE** | 87 | ND | | ND | | ND | |
| | **BENZO(K)FLUORANTHENE** | 8.7 | ND | | ND | | ND | |

Notes:

* "> CAL" equals "X" when reported value is above characterization action level for this locale.
J flag - Numerical value is an estimated quantity.
ND indicates Non-Detect
Blank cells in result column indicate an analysis was not performed for that analyte.

Date generated: November 20, 2000

# Table 4-3
# Summary of Analytical Results

| | | | | | | | | |
|---|---|---|---|---|---|---|---|---|
| | | PRA | | | | | | |
| | | PRA Description | | | | | | |
| | | Sample Type | | | | | | |
| | | Sample Id | **BRK-FSB023-70002** | | **BRK-FSB048-70001** | | **BRK-FSB048-70002** | |
| | | Depth - ft bgs | **2.5 - 3** | | **0 - 1** | | **2.5 - 3** | |
| | | Collected Date | **06/16/00** | | **06/16/00** | | **06/16/00** | |
| | | Laboratory | **Lancaster Laboratories** | | **Lancaster Laboratories** | | **Lancaster Laboratories** | |
| | | Sample Collector | **IT Corporation (Fluor Daniel/GTI** | | **IT Corporation (Fluor Daniel/GTI** | | **IT Corporation (Fluor Daniel/GTI** | |
| | | Result Units | **MG/KG** | | **MG/KG** | | **MG/KG** | |
| Category | Analyte | Action Level | **Result Flag** | **> CAL*** | **Result Flag** | **> CAL*** | **Result Flag** | **> CAL*** |
| | **BENZO(A)PYRENE** | .087 | ND | | ND | | ND | |
| | **DIBENZO(A,H)ANTHRACENE** | .087 | ND | | ND | | ND | |
| | **BENZO(G,H,I)PERYLENE** | 2300 | ND | | ND | | ND | |
| | **INDENO(1,2,3-CD)PYRENE** | .87 | ND | | ND | | ND | |
| **P/PCB** | **AROCLOR-1254** | 1 | ND | | ND | | ND | |
| **METAL** | **BARIUM, TOTAL** | 5500 | 64.7 | | 82.5 | | 57.1 | |
| | **BERYLLIUM, TOTAL** | 160 | ND | | ND | | ND | |
| | **CADMIUM, TOTAL** | 39 | ND | | ND | | ND | |
| | **CHROMIUM, TOTAL** | 230 | 14.1 J | | 19.8 J | | 12.0 J | |
| | **LEAD, TOTAL** | 400 | ND | | ND | | ND | |
| | **NICKEL, TOTAL** | 1600 | 21.5 | | 22.1 | | 20.7 | |
| | **MERCURY, TOTAL** | 20 | ND | | 2.6 | | ND | |
| | **ARSENIC, TOTAL** | .43 | 11.4 | X | 10.8 | X | 12.4 | X |

Notes:

* "> CAL" equals "X" when reported value is above characterization action level for this locale.
J flag - Numerical value is an estimated quantity.
ND indicates Non-Detect
Blank cells in result column indicate an analysis was not performed for that analyte.

Date generated: November 20, 2000

# Table 4-3
# Summary of Analytical Results

| | | | | | | | | |
|---|---|---|---|---|---|---|---|---|
| | | PRA | 23 | | | | | |
| | | PRA Description | FENCE LINE | | | | | |
| | | Sample Type | Normal Sample | | | | | |
| | | Sample Id | BRK-FSS044-40001 | | BRK-FSS045-40001 | | BRK-FSS046-40001 | |
| | | Depth - ft bgs | 0 - 1 | | 0 - 1 | | 0 - 1 | |
| | | Collected Date | 06/12/00 | | 06/12/00 | | 06/12/00 | |
| | | Laboratory | Lancaster Laboratories | | Lancaster Laboratories | | Lancaster Laboratories | |
| | | Sample Collector | IT Corporation (Fluor Daniel/GTI | | IT Corporation (Fluor Daniel/GTI | | IT Corporation (Fluor Daniel/GTI | |
| | | Result Units | MG/KG | | MG/KG | | MG/KG | |
| Category | Analyte | Action Level | Result Flag | > CAL* | Result Flag | > CAL* | Result Flag | > CAL* |
| VOA | BENZENE | 12 | ND | | ND | | ND | |
| | TOLUENE | 16000 | ND | | ND | | ND | |
| | ETHYLBENZENE | 7800 | ND | | ND | | ND | |
| | XYLENE (TOTAL) | 160000 | ND | | ND | | ND | |
| | METHYLENE CHLORIDE | 85 | | | | | | |
| | ACETONE | 7800 | | | | | | |
| BNA | NAPHTHALENE | 1600 | | | | | | |
| | ACENAPHTHENE | 4700 | | | | | | |
| | FLUORENE | 3100 | | | | | | |
| | PHENANTHRENE | 23000 | | | | | | |
| | ANTHRACENE | 23000 | | | | | | |
| | FLUORANTHENE | 3100 | | | | | | |
| | PYRENE | 2300 | | | | | | |
| | BENZO(A)ANTHRACENE | .87 | | | | | | |
| | BENZO(B)FLUORANTHENE | .87 | | | | | | |
| | CHRYSENE | 87 | | | | | | |
| | BENZO(K)FLUORANTHENE | 8.7 | | | | | | |

Notes:

* "> CAL" equals "X" when reported value is above characterization action level for this locale.
J flag - Numerical value is an estimated quantity.
ND indicates Non-Detect
Blank cells in result column indicate an analysis was not performed for that analyte.

Date generated: November 20, 2000

# Table 4-3
## Summary of Analytical Results

| | | | | | | | | |
|---|---|---|---|---|---|---|---|---|
| | | PRA | 23 | | | | | |
| | | PRA Description | FENCE LINE | | | | | |
| | | Sample Type | Normal Sample | | | | | |
| | | Sample Id | BRK-FSS044-40001 | | BRK-FSS045-40001 | | BRK-FSS046-40001 | |
| | | Depth - ft bgs | 0 - 1 | | 0 - 1 | | 0 - 1 | |
| | | Collected Date | 06/12/00 | | 06/12/00 | | 06/12/00 | |
| | | Laboratory | Lancaster Laboratories | | Lancaster Laboratories | | Lancaster Laboratories | |
| | | Sample Collector | IT Corporation (Fluor Daniel/GTI | | IT Corporation (Fluor Daniel/GTI | | IT Corporation (Fluor Daniel/GTI | |
| | | Result Units | MG/KG | | MG/KG | | MG/KG | |
| Category | Analyte | Action Level | Result Flag | > CAL* | Result Flag | > CAL* | Result Flag | > CAL* |
| | BENZO(A)PYRENE | .087 | | | | | | |
| | DIBENZO(A,H)ANTHRACENE | .087 | | | | | | |
| | BENZO(G,H,I)PERYLENE | 2300 | | | | | | |
| | INDENO(1,2,3-CD)PYRENE | .87 | | | | | | |
| P/PCB | AROCLOR-1254 | 1 | ND | | ND | | ND | |
| METAL | BARIUM, TOTAL | 5500 | | | | | | |
| | BERYLLIUM, TOTAL | 160 | | | | | | |
| | CADMIUM, TOTAL | 39 | | | | | | |
| | CHROMIUM, TOTAL | 230 | | | | | | |
| | LEAD, TOTAL | 400 | | | | | | |
| | NICKEL, TOTAL | 1600 | | | | | | |
| | MERCURY, TOTAL | 20 | | | | | | |
| | ARSENIC, TOTAL | .43 | | | | | | |

Notes:

* "> CAL" equals "X" when reported value is above characterization action level for this locale.
J flag - Numerical value is an estimated quantity.
ND indicates Non-Detect
Blank cells in result column indicate an analysis was not performed for that analyte.

Date generated: November 20, 2000

# Table 4-3
# Summary of Analytical Results

| | | | | | | | | |
|---|---|---|---|---|---|---|---|---|
| | | PRA | | | | | 24 | |
| | | PRA Description | | | | | ACCESS ROADS AND PARKING | |
| | | Sample Type | | | | | Normal Sample | |
| | | Sample Id | BRK-FSS047-40001 | | BRK-FSS048-40001 | | BRK-FSS049-40001 | |
| | | Depth - ft bgs | 0 - 1 | | 0 - 1 | | 0 - 1 | |
| | | Collected Date | 06/12/00 | | 06/12/00 | | 06/12/00 | |
| | | Laboratory | Lancaster Laboratories | | Lancaster Laboratories | | Lancaster Laboratories | |
| | | Sample Collector | IT Corporation (Fluor Daniel/GTI | | IT Corporation (Fluor Daniel/GTI | | IT Corporation (Fluor Daniel/GTI | |
| | | Result Units | MG/KG | | MG/KG | | MG/KG | |
| Category | Analyte | Action Level | Result Flag | > CAL* | Result Flag | > CAL* | Result Flag | > CAL* |
| VOA | BENZENE | 12 | ND | | ND | | ND | |
| | TOLUENE | 16000 | ND | | ND | | ND | |
| | ETHYLBENZENE | 7800 | ND | | ND | | ND | |
| | XYLENE (TOTAL) | 160000 | ND | | ND | | ND | |
| | METHYLENE CHLORIDE | 85 | | | | | | |
| | ACETONE | 7800 | | | | | | |
| BNA | NAPHTHALENE | 1600 | | | | | | |
| | ACENAPHTHENE | 4700 | | | | | | |
| | FLUORENE | 3100 | | | | | | |
| | PHENANTHRENE | 23000 | | | | | | |
| | ANTHRACENE | 23000 | | | | | | |
| | FLUORANTHENE | 3100 | | | | | | |
| | PYRENE | 2300 | | | | | | |
| | BENZO(A)ANTHRACENE | .87 | | | | | | |
| | BENZO(B)FLUORANTHENE | .87 | | | | | | |
| | CHRYSENE | 87 | | | | | | |
| | BENZO(K)FLUORANTHENE | 8.7 | | | | | | |

Notes:

* "> CAL" equals "X" when reported value is above characterization action level for this locale.
J flag - Numerical value is an estimated quantity.
ND indicates Non-Detect
Blank cells in result column indicate an analysis was not performed for that analyte.

Date generated: November 20, 2000

# Table 4-3
# Summary of Analytical Results

| | | | | | | | | |
|---|---|---|---|---|---|---|---|---|
| | | PRA | | | | | 24 | |
| | | PRA Description | | | | | ACCESS ROADS AND PARKING | |
| | | Sample Type | | | | | Normal Sample | |
| | | Sample Id | BRK-FSS047-40001 | | BRK-FSS048-40001 | | BRK-FSS049-40001 | |
| | | Depth - ft bgs | 0 - 1 | | 0 - 1 | | 0 - 1 | |
| | | Collected Date | 06/12/00 | | 06/12/00 | | 06/12/00 | |
| | | Laboratory | Lancaster Laboratories | | Lancaster Laboratories | | Lancaster Laboratories | |
| | | Sample Collector | IT Corporation (Fluor Daniel/GTI | | IT Corporation (Fluor Daniel/GTI | | IT Corporation (Fluor Daniel/GTI | |
| | | Result Units | MG/KG | | MG/KG | | MG/KG | |
| Category | Analyte | Action Level | Result Flag | > CAL* | Result Flag | > CAL* | Result Flag | > CAL* |
| | BENZO(A)PYRENE | .087 | | | | | | |
| | DIBENZO(A,H)ANTHRACENE | .087 | | | | | | |
| | BENZO(G,H,I)PERYLENE | 2300 | | | | | | |
| | INDENO(1,2,3-CD)PYRENE | .87 | | | | | | |
| P/PCB | AROCLOR-1254 | 1 | ND | | ND | | ND | |
| METAL | BARIUM, TOTAL | 5500 | | | | | | |
| | BERYLLIUM, TOTAL | 160 | | | | | | |
| | CADMIUM, TOTAL | 39 | | | | | | |
| | CHROMIUM, TOTAL | 230 | | | | | | |
| | LEAD, TOTAL | 400 | | | | | | |
| | NICKEL, TOTAL | 1600 | | | | | | |
| | MERCURY, TOTAL | 20 | | | | | | |
| | ARSENIC, TOTAL | .43 | | | | | | |

Notes:

* "> CAL" equals "X" when reported value is above characterization action level for this locale.
J flag - Numerical value is an estimated quantity.
ND indicates Non-Detect
Blank cells in result column indicate an analysis was not performed for that analyte.

Date generated: November 20, 2000

# Table 4-3
# Summary of Analytical Results

| | | | | | | | | |
|---|---|---|---|---|---|---|---|---|
| | | PRA | | | | | | |
| | | PRA Description | | | | | | |
| | | Sample Type | | | | | | |
| | | Sample Id | **BRK-FSS050-40001** | | **BRK-FSS051-40001** | | **BRK-FSS052-40001** | |
| | | Depth - ft bgs | **0 - 1** | | **0 - 1** | | **0 - 1** | |
| | | Collected Date | **06/12/00** | | **06/12/00** | | **06/12/00** | |
| | | Laboratory | **Lancaster Laboratories** | | **Lancaster Laboratories** | | **Lancaster Laboratories** | |
| | | Sample Collector | **IT Corporation (Fluor Daniel/GTI** | | **IT Corporation (Fluor Daniel/GTI** | | **IT Corporation (Fluor Daniel/GTI** | |
| | | Result Units | **MG/KG** | | **MG/KG** | | **MG/KG** | |
| Category | Analyte | Action Level | **Result Flag** | **> CAL*** | **Result Flag** | **> CAL*** | **Result Flag** | **> CAL*** |
| **VOA** | **BENZENE** | 12 | ND | | ND | | ND | |
| | **TOLUENE** | 16000 | ND | | ND | | ND | |
| | **ETHYLBENZENE** | 7800 | ND | | ND | | ND | |
| | **XYLENE (TOTAL)** | 160000 | ND | | ND | | ND | |
| | **METHYLENE CHLORIDE** | 85 | | | | | | |
| | **ACETONE** | 7800 | | | | | | |
| **BNA** | **NAPHTHALENE** | 1600 | | | | | | |
| | **ACENAPHTHENE** | 4700 | | | | | | |
| | **FLUORENE** | 3100 | | | | | | |
| | **PHENANTHRENE** | 23000 | | | | | | |
| | **ANTHRACENE** | 23000 | | | | | | |
| | **FLUORANTHENE** | 3100 | | | | | | |
| | **PYRENE** | 2300 | | | | | | |
| | **BENZO(A)ANTHRACENE** | .87 | | | | | | |
| | **BENZO(B)FLUORANTHENE** | .87 | | | | | | |
| | **CHRYSENE** | 87 | | | | | | |
| | **BENZO(K)FLUORANTHENE** | 8.7 | | | | | | |

Notes:

* "> CAL" equals "X" when reported value is above characterization action level for this locale.
J flag - Numerical value is an estimated quantity.
ND indicates Non-Detect
Blank cells in result column indicate an analysis was not performed for that analyte.

Date generated: November 20, 2000

# Table 4-3
# Summary of Analytical Results

| | | | | | | | | |
|---|---|---|---|---|---|---|---|---|
| | | PRA | | | | | | |
| | | PRA Description | | | | | | |
| | | Sample Type | | | | | | |
| | | Sample Id | **BRK-FSS050-40001** | | **BRK-FSS051-40001** | | **BRK-FSS052-40001** | |
| | | Depth - ft bgs | **0 - 1** | | **0 - 1** | | **0 - 1** | |
| | | Collected Date | **06/12/00** | | **06/12/00** | | **06/12/00** | |
| | | Laboratory | **Lancaster Laboratories** | | **Lancaster Laboratories** | | **Lancaster Laboratories** | |
| | | Sample Collector | **IT Corporation (Fluor Daniel/GTI** | | **IT Corporation (Fluor Daniel/GTI** | | **IT Corporation (Fluor Daniel/GTI** | |
| | | Result Units | **MG/KG** | | **MG/KG** | | **MG/KG** | |
| Category | Analyte | Action Level | **Result Flag** | **> CAL*** | **Result Flag** | **> CAL*** | **Result Flag** | **> CAL*** |
| | **BENZO(A)PYRENE** | .087 | | | | | | |
| | **DIBENZO(A,H)ANTHRACENE** | .087 | | | | | | |
| | **BENZO(G,H,I)PERYLENE** | 2300 | | | | | | |
| | **INDENO(1,2,3-CD)PYRENE** | .87 | | | | | | |
| **P/PCB** | **AROCLOR-1254** | 1 | ND | | ND | | ND | |
| **METAL** | **BARIUM, TOTAL** | 5500 | | | | | | |
| | **BERYLLIUM, TOTAL** | 160 | | | | | | |
| | **CADMIUM, TOTAL** | 39 | | | | | | |
| | **CHROMIUM, TOTAL** | 230 | | | | | | |
| | **LEAD, TOTAL** | 400 | | | | | | |
| | **NICKEL, TOTAL** | 1600 | | | | | | |
| | **MERCURY, TOTAL** | 20 | | | | | | |
| | **ARSENIC, TOTAL** | .43 | | | | | | |

Notes:

* "> CAL" equals "X" when reported value is above characterization action level for this locale.
J flag - Numerical value is an estimated quantity.
ND indicates Non-Detect
Blank cells in result column indicate an analysis was not performed for that analyte.

Date generated: November 20, 2000

# Table 4-3
# Summary of Analytical Results

| | | | | | | | | |
|---|---|---|---|---|---|---|---|---|
| | | PRA | | | | | | |
| | | PRA Description | | | | | | |
| | | Sample Type | | | | | | |
| | | Sample Id | **BRK-FSS053-40001** | | **BRK-FSS054-40001** | | **BRK-FSS055-40001** | |
| | | Depth - ft bgs | **0 - 1** | | **0 - 1** | | **0 - 1** | |
| | | Collected Date | **06/12/00** | | **06/12/00** | | **06/12/00** | |
| | | Laboratory | **Lancaster Laboratories** | | **Lancaster Laboratories** | | **Lancaster Laboratories** | |
| | | Sample Collector | **IT Corporation (Fluor Daniel/GTI** | | **IT Corporation (Fluor Daniel/GTI** | | **IT Corporation (Fluor Daniel/GTI** | |
| | | Result Units | **MG/KG** | | **MG/KG** | | **MG/KG** | |
| Category | Analyte | Action Level | **Result Flag** | **> CAL*** | **Result Flag** | **> CAL*** | **Result Flag** | **> CAL*** |
| **VOA** | **BENZENE** | 12 | ND | | ND | | ND | |
| | **TOLUENE** | 16000 | ND | | ND | | ND | |
| | **ETHYLBENZENE** | 7800 | ND | | ND | | ND | |
| | **XYLENE (TOTAL)** | 160000 | ND | | ND | | ND | |
| | **METHYLENE CHLORIDE** | 85 | | | | | | |
| | **ACETONE** | 7800 | | | | | | |
| **BNA** | **NAPHTHALENE** | 1600 | | | | | | |
| | **ACENAPHTHENE** | 4700 | | | | | | |
| | **FLUORENE** | 3100 | | | | | | |
| | **PHENANTHRENE** | 23000 | | | | | | |
| | **ANTHRACENE** | 23000 | | | | | | |
| | **FLUORANTHENE** | 3100 | | | | | | |
| | **PYRENE** | 2300 | | | | | | |
| | **BENZO(A)ANTHRACENE** | .87 | | | | | | |
| | **BENZO(B)FLUORANTHENE** | .87 | | | | | | |
| | **CHRYSENE** | 87 | | | | | | |
| | **BENZO(K)FLUORANTHENE** | 8.7 | | | | | | |

Notes:

* "> CAL" equals "X" when reported value is above characterization action level for this locale.
J flag - Numerical value is an estimated quantity.
ND indicates Non-Detect
Blank cells in result column indicate an analysis was not performed for that analyte.

Date generated: November 20, 2000

# Table 4-3
# Summary of Analytical Results

| | | | | | | | | |
|---|---|---|---|---|---|---|---|---|
| | | PRA | | | | | | |
| | | PRA Description | | | | | | |
| | | Sample Type | | | | | | |
| | | Sample Id | **BRK-FSS053-40001** | | **BRK-FSS054-40001** | | **BRK-FSS055-40001** | |
| | | Depth - ft bgs | **0 - 1** | | **0 - 1** | | **0 - 1** | |
| | | Collected Date | **06/12/00** | | **06/12/00** | | **06/12/00** | |
| | | Laboratory | **Lancaster Laboratories** | | **Lancaster Laboratories** | | **Lancaster Laboratories** | |
| | | Sample Collector | **IT Corporation (Fluor Daniel/GTI** | | **IT Corporation (Fluor Daniel/GTI** | | **IT Corporation (Fluor Daniel/GTI** | |
| | | Result Units | **MG/KG** | | **MG/KG** | | **MG/KG** | |
| Category | Analyte | Action Level | **Result Flag** | **> CAL*** | **Result Flag** | **> CAL*** | **Result Flag** | **> CAL*** |
| | **BENZO(A)PYRENE** | .087 | | | | | | |
| | **DIBENZO(A,H)ANTHRACENE** | .087 | | | | | | |
| | **BENZO(G,H,I)PERYLENE** | 2300 | | | | | | |
| | **INDENO(1,2,3-CD)PYRENE** | .87 | | | | | | |
| **P/PCB** | **AROCLOR-1254** | 1 | ND | | ND | | ND | |
| **METAL** | **BARIUM, TOTAL** | 5500 | | | | | | |
| | **BERYLLIUM, TOTAL** | 160 | | | | | | |
| | **CADMIUM, TOTAL** | 39 | | | | | | |
| | **CHROMIUM, TOTAL** | 230 | | | | | | |
| | **LEAD, TOTAL** | 400 | | | | | | |
| | **NICKEL, TOTAL** | 1600 | | | | | | |
| | **MERCURY, TOTAL** | 20 | | | | | | |
| | **ARSENIC, TOTAL** | .43 | | | | | | |

Notes:

* "> CAL" equals "X" when reported value is above characterization action level for this locale.
J flag - Numerical value is an estimated quantity.
ND indicates Non-Detect
Blank cells in result column indicate an analysis was not performed for that analyte.

Date generated: November 20, 2000

# Table 4-3
# Summary of Analytical Results

| | | | | | | | | |
|---|---|---|---|---|---|---|---|---|
| | | PRA | | | | | | |
| | | PRA Description | | | | | | |
| | | Sample Type | | | | | | |
| | | Sample Id | **BRK-FSS056-40001** | | **BRK-FSS057-40001** | | **BRK-FSS070-40001** | |
| | | Depth - ft bgs | **0 - 1** | | **0 - 1** | | **0 - 1** | |
| | | Collected Date | **06/13/00** | | **06/13/00** | | **06/14/00** | |
| | | Laboratory | **Lancaster Laboratories** | | **Lancaster Laboratories** | | **Lancaster Laboratories** | |
| | | Sample Collector | **IT Corporation (Fluor Daniel/GTI** | | **IT Corporation (Fluor Daniel/GTI** | | **IT Corporation (Fluor Daniel/GTI** | |
| | | Result Units | **MG/KG** | | **MG/KG** | | **MG/KG** | |
| Category | Analyte | Action Level | **Result Flag** | **> CAL*** | **Result Flag** | **> CAL*** | **Result Flag** | **> CAL*** |
| **VOA** | **BENZENE** | 12 | ND | | ND | | ND | |
| | **TOLUENE** | 16000 | ND | | ND | | ND | |
| | **ETHYLBENZENE** | 7800 | ND | | ND | | ND | |
| | **XYLENE (TOTAL)** | 160000 | ND | | ND | | ND | |
| | **METHYLENE CHLORIDE** | 85 | | | | | | |
| | **ACETONE** | 7800 | | | | | | |
| **BNA** | **NAPHTHALENE** | 1600 | | | | | | |
| | **ACENAPHTHENE** | 4700 | | | | | | |
| | **FLUORENE** | 3100 | | | | | | |
| | **PHENANTHRENE** | 23000 | | | | | | |
| | **ANTHRACENE** | 23000 | | | | | | |
| | **FLUORANTHENE** | 3100 | | | | | | |
| | **PYRENE** | 2300 | | | | | | |
| | **BENZO(A)ANTHRACENE** | .87 | | | | | | |
| | **BENZO(B)FLUORANTHENE** | .87 | | | | | | |
| | **CHRYSENE** | 87 | | | | | | |
| | **BENZO(K)FLUORANTHENE** | 8.7 | | | | | | |

Notes:

* "> CAL" equals "X" when reported value is above characterization action level for this locale.
J flag - Numerical value is an estimated quantity.
ND indicates Non-Detect
Blank cells in result column indicate an analysis was not performed for that analyte.

Date generated: November 20, 2000

# Table 4-3
# Summary of Analytical Results

| | | | | | | | | |
|---|---|---|---|---|---|---|---|---|
| | | PRA | | | | | | |
| | | PRA Description | | | | | | |
| | | Sample Type | | | | | | |
| | | Sample Id | **BRK-FSS056-40001** | | **BRK-FSS057-40001** | | **BRK-FSS070-40001** | |
| | | Depth - ft bgs | **0 - 1** | | **0 - 1** | | **0 - 1** | |
| | | Collected Date | **06/13/00** | | **06/13/00** | | **06/14/00** | |
| | | Laboratory | **Lancaster Laboratories** | | **Lancaster Laboratories** | | **Lancaster Laboratories** | |
| | | Sample Collector | **IT Corporation (Fluor Daniel/GTI** | | **IT Corporation (Fluor Daniel/GTI** | | **IT Corporation (Fluor Daniel/GTI** | |
| | | Result Units | **MG/KG** | | **MG/KG** | | **MG/KG** | |
| Category | Analyte | Action Level | **Result Flag** | **> CAL*** | **Result Flag** | **> CAL*** | **Result Flag** | **> CAL*** |
| | **BENZO(A)PYRENE** | .087 | | | | | | |
| | **DIBENZO(A,H)ANTHRACENE** | .087 | | | | | | |
| | **BENZO(G,H,I)PERYLENE** | 2300 | | | | | | |
| | **INDENO(1,2,3-CD)PYRENE** | .87 | | | | | | |
| **P/PCB** | **AROCLOR-1254** | 1 | ND | | ND | | ND | |
| **METAL** | **BARIUM, TOTAL** | 5500 | | | | | | |
| | **BERYLLIUM, TOTAL** | 160 | | | | | | |
| | **CADMIUM, TOTAL** | 39 | | | | | | |
| | **CHROMIUM, TOTAL** | 230 | | | | | | |
| | **LEAD, TOTAL** | 400 | | | | | | |
| | **NICKEL, TOTAL** | 1600 | | | | | | |
| | **MERCURY, TOTAL** | 20 | | | | | | |
| | **ARSENIC, TOTAL** | .43 | | | | | | |

Notes:

* "> CAL" equals "X" when reported value is above characterization action level for this locale.
J flag - Numerical value is an estimated quantity.
ND indicates Non-Detect
Blank cells in result column indicate an analysis was not performed for that analyte.

Date generated: November 20, 2000

# Table 4-3
# Summary of Analytical Results

| | | | | | | | | |
|---|---|---|---|---|---|---|---|---|
| | | PRA | | | | | | |
| | | PRA Description | | | | | | |
| | | Sample Type | | | | | | |
| | | Sample Id | **BRK-FSS071-40001** | | **BRK-FSS072-40001** | | **BRK-FSS073-40001** | |
| | | Depth - ft bgs | **0 - 1** | | **0 - 1** | | **0 - 1** | |
| | | Collected Date | **06/14/00** | | **06/14/00** | | **06/14/00** | |
| | | Laboratory | **Lancaster Laboratories** | | **Lancaster Laboratories** | | **Lancaster Laboratories** | |
| | | Sample Collector | **IT Corporation (Fluor Daniel/GTI** | | **IT Corporation (Fluor Daniel/GTI** | | **IT Corporation (Fluor Daniel/GTI** | |
| | | Result Units | **MG/KG** | | **MG/KG** | | **MG/KG** | |
| Category | Analyte | Action Level | **Result Flag** | **> CAL*** | **Result Flag** | **> CAL*** | **Result Flag** | **> CAL*** |
| **VOA** | **BENZENE** | 12 | ND | | ND | | ND | |
| | **TOLUENE** | 16000 | ND | | ND | | ND | |
| | **ETHYLBENZENE** | 7800 | ND | | ND | | ND | |
| | **XYLENE (TOTAL)** | 160000 | ND | | ND | | ND | |
| | **METHYLENE CHLORIDE** | 85 | | | | | | |
| | **ACETONE** | 7800 | | | | | | |
| **BNA** | **NAPHTHALENE** | 1600 | | | | | | |
| | **ACENAPHTHENE** | 4700 | | | | | | |
| | **FLUORENE** | 3100 | | | | | | |
| | **PHENANTHRENE** | 23000 | | | | | | |
| | **ANTHRACENE** | 23000 | | | | | | |
| | **FLUORANTHENE** | 3100 | | | | | | |
| | **PYRENE** | 2300 | | | | | | |
| | **BENZO(A)ANTHRACENE** | .87 | | | | | | |
| | **BENZO(B)FLUORANTHENE** | .87 | | | | | | |
| | **CHRYSENE** | 87 | | | | | | |
| | **BENZO(K)FLUORANTHENE** | 8.7 | | | | | | |

Notes:

* "> CAL" equals "X" when reported value is above characterization action level for this locale.
J flag - Numerical value is an estimated quantity.
ND indicates Non-Detect
Blank cells in result column indicate an analysis was not performed for that analyte.

Date generated: November 20, 2000

# Table 4-3
# Summary of Analytical Results

| | | | | | | | | |
|---|---|---|---|---|---|---|---|---|
| | | PRA | | | | | | |
| | | PRA Description | | | | | | |
| | | Sample Type | | | | | | |
| | | Sample Id | **BRK-FSS071-40001** | | **BRK-FSS072-40001** | | **BRK-FSS073-40001** | |
| | | Depth - ft bgs | **0 - 1** | | **0 - 1** | | **0 - 1** | |
| | | Collected Date | **06/14/00** | | **06/14/00** | | **06/14/00** | |
| | | Laboratory | **Lancaster Laboratories** | | **Lancaster Laboratories** | | **Lancaster Laboratories** | |
| | | Sample Collector | **IT Corporation (Fluor Daniel/GTI** | | **IT Corporation (Fluor Daniel/GTI** | | **IT Corporation (Fluor Daniel/GTI** | |
| | | Result Units | **MG/KG** | | **MG/KG** | | **MG/KG** | |
| Category | Analyte | Action Level | **Result Flag** | **> CAL*** | **Result Flag** | **> CAL*** | **Result Flag** | **> CAL*** |
| | **BENZO(A)PYRENE** | .087 | | | | | | |
| | **DIBENZO(A,H)ANTHRACENE** | .087 | | | | | | |
| | **BENZO(G,H,I)PERYLENE** | 2300 | | | | | | |
| | **INDENO(1,2,3-CD)PYRENE** | .87 | | | | | | |
| **P/PCB** | **AROCLOR-1254** | 1 | ND | | ND | | ND | |
| **METAL** | **BARIUM, TOTAL** | 5500 | | | | | | |
| | **BERYLLIUM, TOTAL** | 160 | | | | | | |
| | **CADMIUM, TOTAL** | 39 | | | | | | |
| | **CHROMIUM, TOTAL** | 230 | | | | | | |
| | **LEAD, TOTAL** | 400 | | | | | | |
| | **NICKEL, TOTAL** | 1600 | | | | | | |
| | **MERCURY, TOTAL** | 20 | | | | | | |
| | **ARSENIC, TOTAL** | .43 | | | | | | |

Notes:

* "> CAL" equals "X" when reported value is above characterization action level for this locale.
J flag - Numerical value is an estimated quantity.
ND indicates Non-Detect
Blank cells in result column indicate an analysis was not performed for that analyte.

Date generated: November 20, 2000

# Table 4-3
## Summary of Analytical Results

| | | | | | | | | |
|---|---|---|---|---|---|---|---|---|
| | | PRA | 25 | | | | | |
| | | PRA Description | FIN FAN UNITS | | | | | |
| | | Sample Type | Normal Sample | | | | | |
| | | Sample Id | BRK-FSS058-40001 | | BRK-FSS059-40001 | | BRK-FSS060-40001 | |
| | | Depth - ft bgs | 0 - 1 | | 0 - 1 | | 0 - 1 | |
| | | Collected Date | 06/13/00 | | 06/13/00 | | 06/13/00 | |
| | | Laboratory | Lancaster Laboratories | | Lancaster Laboratories | | Lancaster Laboratories | |
| | | Sample Collector | IT Corporation (Fluor Daniel/GTI | | IT Corporation (Fluor Daniel/GTI | | IT Corporation (Fluor Daniel/GTI | |
| | | Result Units | MG/KG | | MG/KG | | MG/KG | |
| Category | Analyte | Action Level | Result Flag | > CAL* | Result Flag | > CAL* | Result Flag | > CAL* |
| VOA | BENZENE | 12 | | | | | | |
| | TOLUENE | 16000 | | | | | | |
| | ETHYLBENZENE | 7800 | | | | | | |
| | XYLENE (TOTAL) | 160000 | | | | | | |
| | METHYLENE CHLORIDE | 85 | | | | | | |
| | ACETONE | 7800 | | | | | | |
| BNA | NAPHTHALENE | 1600 | | | | | | |
| | ACENAPHTHENE | 4700 | | | | | | |
| | FLUORENE | 3100 | | | | | | |
| | PHENANTHRENE | 23000 | | | | | | |
| | ANTHRACENE | 23000 | | | | | | |
| | FLUORANTHENE | 3100 | | | | | | |
| | PYRENE | 2300 | | | | | | |
| | BENZO(A)ANTHRACENE | .87 | | | | | | |
| | BENZO(B)FLUORANTHENE | .87 | | | | | | |
| | CHRYSENE | 87 | | | | | | |
| | BENZO(K)FLUORANTHENE | 8.7 | | | | | | |

Notes:

* "> CAL" equals "X" when reported value is above characterization action level for this locale.
J flag - Numerical value is an estimated quantity.
ND indicates Non-Detect
Blank cells in result column indicate an analysis was not performed for that analyte.

Date generated: November 20, 2000

# Table 4-3
## Summary of Analytical Results

| | | | | | | | | |
|---|---|---|---|---|---|---|---|---|
| | | PRA | 25 | | | | | |
| | | PRA Description | FIN FAN UNITS | | | | | |
| | | Sample Type | Normal Sample | | | | | |
| | | Sample Id | BRK-FSS058-40001 | | BRK-FSS059-40001 | | BRK-FSS060-40001 | |
| | | Depth - ft bgs | 0 - 1 | | 0 - 1 | | 0 - 1 | |
| | | Collected Date | 06/13/00 | | 06/13/00 | | 06/13/00 | |
| | | Laboratory | Lancaster Laboratories | | Lancaster Laboratories | | Lancaster Laboratories | |
| | | Sample Collector | IT Corporation (Fluor Daniel/GTI | | IT Corporation (Fluor Daniel/GTI | | IT Corporation (Fluor Daniel/GTI | |
| | | Result Units | MG/KG | | MG/KG | | MG/KG | |
| Category | Analyte | Action Level | Result Flag | > CAL* | Result Flag | > CAL* | Result Flag | > CAL* |
| | BENZO(A)PYRENE | .087 | | | | | | |
| | DIBENZO(A,H)ANTHRACENE | .087 | | | | | | |
| | BENZO(G,H,I)PERYLENE | 2300 | | | | | | |
| | INDENO(1,2,3-CD)PYRENE | .87 | | | | | | |
| P/PCB | AROCLOR-1254 | 1 | ND | | ND | | ND | |
| METAL | BARIUM, TOTAL | 5500 | | | | | | |
| | BERYLLIUM, TOTAL | 160 | | | | | | |
| | CADMIUM, TOTAL | 39 | | | | | | |
| | CHROMIUM, TOTAL | 230 | | | | | | |
| | LEAD, TOTAL | 400 | | | | | | |
| | NICKEL, TOTAL | 1600 | | | | | | |
| | MERCURY, TOTAL | 20 | | | | | | |
| | ARSENIC, TOTAL | .43 | | | | | | |

Notes:

* "> CAL" equals "X" when reported value is above characterization action level for this locale.
J flag - Numerical value is an estimated quantity.
ND indicates Non-Detect
Blank cells in result column indicate an analysis was not performed for that analyte.

Date generated: November 20, 2000

# Table 4-3
# Summary of Analytical Results

| | | | | | | | | |
|---|---|---|---|---|---|---|---|---|
| | | PRA | | | | | | |
| | | PRA Description | | | | | | |
| | | Sample Type | | | | | | |
| | | Sample Id | **BRK-FSS061-40001** | | **BRK-FSS062-40001** | | **BRK-FSS063-40001** | |
| | | Depth - ft bgs | **0 - 1** | | **0 - 1** | | **0 - 1** | |
| | | Collected Date | **06/13/00** | | **06/13/00** | | **06/13/00** | |
| | | Laboratory | **Lancaster Laboratories** | | **Lancaster Laboratories** | | **Lancaster Laboratories** | |
| | | Sample Collector | **IT Corporation (Fluor Daniel/GTI** | | **IT Corporation (Fluor Daniel/GTI** | | **IT Corporation (Fluor Daniel/GTI** | |
| | | Result Units | **MG/KG** | | **MG/KG** | | **MG/KG** | |
| Category | Analyte | Action Level | **Result Flag** | **> CAL*** | **Result Flag** | **> CAL*** | **Result Flag** | **> CAL*** |
| **VOA** | **BENZENE** | 12 | | | | | | |
| | **TOLUENE** | 16000 | | | | | | |
| | **ETHYLBENZENE** | 7800 | | | | | | |
| | **XYLENE (TOTAL)** | 160000 | | | | | | |
| | **METHYLENE CHLORIDE** | 85 | | | | | | |
| | **ACETONE** | 7800 | | | | | | |
| **BNA** | **NAPHTHALENE** | 1600 | | | | | | |
| | **ACENAPHTHENE** | 4700 | | | | | | |
| | **FLUORENE** | 3100 | | | | | | |
| | **PHENANTHRENE** | 23000 | | | | | | |
| | **ANTHRACENE** | 23000 | | | | | | |
| | **FLUORANTHENE** | 3100 | | | | | | |
| | **PYRENE** | 2300 | | | | | | |
| | **BENZO(A)ANTHRACENE** | .87 | | | | | | |
| | **BENZO(B)FLUORANTHENE** | .87 | | | | | | |
| | **CHRYSENE** | 87 | | | | | | |
| | **BENZO(K)FLUORANTHENE** | 8.7 | | | | | | |

Notes:

* "> CAL" equals "X" when reported value is above characterization action level for this locale.
J flag - Numerical value is an estimated quantity.
ND indicates Non-Detect
Blank cells in result column indicate an analysis was not performed for that analyte.

Date generated: November 20, 2000

# Table 4-3
# Summary of Analytical Results

| | | | | | | | | |
|---|---|---|---|---|---|---|---|---|
| | | PRA | | | | | | |
| | | PRA Description | | | | | | |
| | | Sample Type | | | | | | |
| | | Sample Id | **BRK-FSS061-40001** | | **BRK-FSS062-40001** | | **BRK-FSS063-40001** | |
| | | Depth - ft bgs | **0 - 1** | | **0 - 1** | | **0 - 1** | |
| | | Collected Date | **06/13/00** | | **06/13/00** | | **06/13/00** | |
| | | Laboratory | **Lancaster Laboratories** | | **Lancaster Laboratories** | | **Lancaster Laboratories** | |
| | | Sample Collector | **IT Corporation (Fluor Daniel/GTI** | | **IT Corporation (Fluor Daniel/GTI** | | **IT Corporation (Fluor Daniel/GTI** | |
| | | Result Units | **MG/KG** | | **MG/KG** | | **MG/KG** | |
| Category | Analyte | Action Level | **Result Flag** | **> CAL*** | **Result Flag** | **> CAL*** | **Result Flag** | **> CAL*** |
| | **BENZO(A)PYRENE** | .087 | | | | | | |
| | **DIBENZO(A,H)ANTHRACENE** | .087 | | | | | | |
| | **BENZO(G,H,I)PERYLENE** | 2300 | | | | | | |
| | **INDENO(1,2,3-CD)PYRENE** | .87 | | | | | | |
| **P/PCB** | **AROCLOR-1254** | 1 | ND | | ND | | ND | |
| **METAL** | **BARIUM, TOTAL** | 5500 | | | | | | |
| | **BERYLLIUM, TOTAL** | 160 | | | | | | |
| | **CADMIUM, TOTAL** | 39 | | | | | | |
| | **CHROMIUM, TOTAL** | 230 | | | | | | |
| | **LEAD, TOTAL** | 400 | | | | | | |
| | **NICKEL, TOTAL** | 1600 | | | | | | |
| | **MERCURY, TOTAL** | 20 | | | | | | |
| | **ARSENIC, TOTAL** | .43 | | | | | | |

Notes:

* "> CAL" equals "X" when reported value is above characterization action level for this locale.
J flag - Numerical value is an estimated quantity.
ND indicates Non-Detect
Blank cells in result column indicate an analysis was not performed for that analyte.

Date generated: November 20, 2000

# Table 4-3
## Summary of Analytical Results

| | | | | | | | | |
|---|---|---|---|---|---|---|---|---|
| | | PRA | 26 | | | | 27 | |
| | | PRA Description | GENERATOR FIN FAN UNIT | | | | SUMP IN BASEMENT OF COMP | |
| | | Sample Type | Normal Sample | | | | Normal Sample | |
| | | Sample Id | BRK-FSS064-40001 | | BRK-FSS065-40001 | | BRK-FCH012-80001 | |
| | | Depth - ft bgs | 0 - 1 | | 0 - 1 | | 0 - 0 | |
| | | Collected Date | 06/13/00 | | 06/13/00 | | 06/19/00 | |
| | | Laboratory | Lancaster Laboratories | | Lancaster Laboratories | | Lancaster Laboratories | |
| | | Sample Collector | IT Corporation (Fluor Daniel/GTI | | IT Corporation (Fluor Daniel/GTI | | IT Corporation (Fluor Daniel/GTI | |
| | | Result Units | MG/KG | | MG/KG | | MG/KG | |
| Category | Analyte | Action Level | Result Flag | > CAL* | Result Flag | > CAL* | Result Flag | > CAL* |
| VOA | BENZENE | 12 | | | | | | |
| | TOLUENE | 16000 | | | | | | |
| | ETHYLBENZENE | 7800 | | | | | | |
| | XYLENE (TOTAL) | 160000 | | | | | | |
| | METHYLENE CHLORIDE | 85 | | | | | | |
| | ACETONE | 7800 | | | | | | |
| BNA | NAPHTHALENE | 1600 | | | | | | |
| | ACENAPHTHENE | 4700 | | | | | | |
| | FLUORENE | 3100 | | | | | | |
| | PHENANTHRENE | 23000 | | | | | | |
| | ANTHRACENE | 23000 | | | | | | |
| | FLUORANTHENE | 3100 | | | | | | |
| | PYRENE | 2300 | | | | | | |
| | BENZO(A)ANTHRACENE | .87 | | | | | | |
| | BENZO(B)FLUORANTHENE | .87 | | | | | | |
| | CHRYSENE | 87 | | | | | | |
| | BENZO(K)FLUORANTHENE | 8.7 | | | | | | |

Notes:

* "> CAL" equals "X" when reported value is above characterization action level for this locale.
J flag - Numerical value is an estimated quantity.
ND indicates Non-Detect
Blank cells in result column indicate an analysis was not performed for that analyte.

Date generated: November 20, 2000

# Table 4-3
## Summary of Analytical Results

| | | | | | | | | |
|---|---|---|---|---|---|---|---|---|
| | | PRA | 26 | | | | 27 | |
| | | PRA Description | GENERATOR FIN FAN UNIT | | | | SUMP IN BASEMENT OF COMP | |
| | | Sample Type | Normal Sample | | | | Normal Sample | |
| | | Sample Id | BRK-FSS064-40001 | | BRK-FSS065-40001 | | BRK-FCH012-80001 | |
| | | Depth - ft bgs | 0 - 1 | | 0 - 1 | | 0 - 0 | |
| | | Collected Date | 06/13/00 | | 06/13/00 | | 06/19/00 | |
| | | Laboratory | Lancaster Laboratories | | Lancaster Laboratories | | Lancaster Laboratories | |
| | | Sample Collector | IT Corporation (Fluor Daniel/GTI | | IT Corporation (Fluor Daniel/GTI | | IT Corporation (Fluor Daniel/GTI | |
| | | Result Units | MG/KG | | MG/KG | | MG/KG | |
| Category | Analyte | Action Level | Result Flag | > CAL* | Result Flag | > CAL* | Result Flag | > CAL* |
| | BENZO(A)PYRENE | .087 | | | | | | |
| | DIBENZO(A,H)ANTHRACENE | .087 | | | | | | |
| | BENZO(G,H,I)PERYLENE | 2300 | | | | | | |
| | INDENO(1,2,3-CD)PYRENE | .87 | | | | | | |
| P/PCB | AROCLOR-1254 | 1 | ND | | ND | | 0.074 | |
| METAL | BARIUM, TOTAL | 5500 | | | | | | |
| | BERYLLIUM, TOTAL | 160 | | | | | | |
| | CADMIUM, TOTAL | 39 | | | | | | |
| | CHROMIUM, TOTAL | 230 | | | | | | |
| | LEAD, TOTAL | 400 | | | | | | |
| | NICKEL, TOTAL | 1600 | | | | | | |
| | MERCURY, TOTAL | 20 | | | | | | |
| | ARSENIC, TOTAL | .43 | | | | | | |

Notes:

* "> CAL" equals "X" when reported value is above characterization action level for this locale.
J flag - Numerical value is an estimated quantity.
ND indicates Non-Detect
Blank cells in result column indicate an analysis was not performed for that analyte.

Date generated: November 20, 2000

# Table 4-3
# Summary of Analytical Results

| | | | | | | | | |
|---|---|---|---|---|---|---|---|---|
| | | PRA | | | | | | |
| | | PRA Description | **RESSOR BUILDING** | | | | | |
| | | Sample Type | | | | | | |
| | | Sample Id | **BRK-FCH013-80001** | | **BRK-FCH014-80001** | | **BRK-FSB050-70001** | |
| | | Depth - ft bgs | **0 - 0** | | **0 - 0** | | **0 - 1** | |
| | | Collected Date | **06/19/00** | | **06/19/00** | | **06/16/00** | |
| | | Laboratory | **Lancaster Laboratories** | | **Lancaster Laboratories** | | **Lancaster Laboratories** | |
| | | Sample Collector | **IT Corporation (Fluor Daniel/GTI** | | **IT Corporation (Fluor Daniel/GTI** | | **IT Corporation (Fluor Daniel/GTI** | |
| | | Result Units | **MG/KG** | | **MG/KG** | | **MG/KG** | |
| Category | Analyte | Action Level | **Result Flag** | **> CAL*** | **Result Flag** | **> CAL*** | **Result Flag** | **> CAL*** |
| **VOA** | **BENZENE** | 12 | | | | | ND | |
| | **TOLUENE** | 16000 | | | | | ND | |
| | **ETHYLBENZENE** | 7800 | | | | | ND | |
| | **XYLENE (TOTAL)** | 160000 | | | | | ND | |
| | **METHYLENE CHLORIDE** | 85 | | | | | ND | |
| | **ACETONE** | 7800 | | | | | ND | |
| **BNA** | **NAPHTHALENE** | 1600 | | | | | ND | |
| | **ACENAPHTHENE** | 4700 | | | | | ND | |
| | **FLUORENE** | 3100 | | | | | ND | |
| | **PHENANTHRENE** | 23000 | | | | | ND | |
| | **ANTHRACENE** | 23000 | | | | | ND | |
| | **FLUORANTHENE** | 3100 | | | | | ND | |
| | **PYRENE** | 2300 | | | | | ND | |
| | **BENZO(A)ANTHRACENE** | .87 | | | | | ND | |
| | **BENZO(B)FLUORANTHENE** | .87 | | | | | ND | |
| | **CHRYSENE** | 87 | | | | | ND | |
| | **BENZO(K)FLUORANTHENE** | 8.7 | | | | | ND | |

Notes:

* "> CAL" equals "X" when reported value is above characterization action level for this locale.
J flag - Numerical value is an estimated quantity.
ND indicates Non-Detect
Blank cells in result column indicate an analysis was not performed for that analyte.

Date generated: November 20, 2000

# Table 4-3
# Summary of Analytical Results

| | | | | | | | | |
|---|---|---|---|---|---|---|---|---|
| | | PRA | | | | | | |
| | | PRA Description | **RESSOR BUILDING** | | | | | |
| | | Sample Type | | | | | | |
| | | Sample Id | **BRK-FCH013-80001** | | **BRK-FCH014-80001** | | **BRK-FSB050-70001** | |
| | | Depth - ft bgs | **0 - 0** | | **0 - 0** | | **0 - 1** | |
| | | Collected Date | **06/19/00** | | **06/19/00** | | **06/16/00** | |
| | | Laboratory | **Lancaster Laboratories** | | **Lancaster Laboratories** | | **Lancaster Laboratories** | |
| | | Sample Collector | **IT Corporation (Fluor Daniel/GTI** | | **IT Corporation (Fluor Daniel/GTI** | | **IT Corporation (Fluor Daniel/GTI** | |
| | | Result Units | **MG/KG** | | **MG/KG** | | **MG/KG** | |
| Category | Analyte | Action Level | **Result Flag** | **> CAL*** | **Result Flag** | **> CAL*** | **Result Flag** | **> CAL*** |
| | **BENZO(A)PYRENE** | .087 | | | | | ND | |
| | **DIBENZO(A,H)ANTHRACENE** | .087 | | | | | ND | |
| | **BENZO(G,H,I)PERYLENE** | 2300 | | | | | ND | |
| | **INDENO(1,2,3-CD)PYRENE** | .87 | | | | | ND | |
| **P/PCB** | **AROCLOR-1254** | 1 | 0.59 | | 0.13 | | ND | |
| **METAL** | **BARIUM, TOTAL** | 5500 | | | | | 126 | |
| | **BERYLLIUM, TOTAL** | 160 | | | | | ND | |
| | **CADMIUM, TOTAL** | 39 | | | | | ND | |
| | **CHROMIUM, TOTAL** | 230 | | | | | 37.4 J | |
| | **LEAD, TOTAL** | 400 | | | | | 56.3 | |
| | **NICKEL, TOTAL** | 1600 | | | | | 20.6 | |
| | **MERCURY, TOTAL** | 20 | | | | | 0.54 | |
| | **ARSENIC, TOTAL** | .43 | | | | | 17.1 | X |

Notes:

* "> CAL" equals "X" when reported value is above characterization action level for this locale.
J flag - Numerical value is an estimated quantity.
ND indicates Non-Detect
Blank cells in result column indicate an analysis was not performed for that analyte.

Date generated: November 20, 2000

# Table 4-3
# Summary of Analytical Results

| | | | | | | | | |
|---|---|---|---|---|---|---|---|---|
| | | PRA | | | | | | |
| | | PRA Description | | | | | | |
| | | Sample Type | | | | | | |
| | | Sample Id | **BRK-FSB050-70002** | | **BRK-FSB050-70003** | | **BRK-FSB051-70001** | |
| | | Depth - ft bgs | **2 - 2.5** | | **3.5 - 4** | | **0 - 1** | |
| | | Collected Date | **06/16/00** | | **06/16/00** | | **06/16/00** | |
| | | Laboratory | **Lancaster Laboratories** | | **Lancaster Laboratories** | | **Lancaster Laboratories** | |
| | | Sample Collector | **IT Corporation (Fluor Daniel/GTI** | | **IT Corporation (Fluor Daniel/GTI** | | **IT Corporation (Fluor Daniel/GTI** | |
| | | Result Units | **MG/KG** | | **MG/KG** | | **MG/KG** | |
| Category | Analyte | Action Level | **Result Flag** | **> CAL*** | **Result Flag** | **> CAL*** | **Result Flag** | **> CAL*** |
| **VOA** | **BENZENE** | 12 | ND | | ND | | ND | |
| | **TOLUENE** | 16000 | ND | | ND | | ND | |
| | **ETHYLBENZENE** | 7800 | ND | | ND | | ND | |
| | **XYLENE (TOTAL)** | 160000 | ND | | ND | | ND | |
| | **METHYLENE CHLORIDE** | 85 | ND | | ND | | ND | |
| | **ACETONE** | 7800 | ND | | ND | | ND | |
| **BNA** | **NAPHTHALENE** | 1600 | ND | | ND | | ND | |
| | **ACENAPHTHENE** | 4700 | ND | | ND | | ND | |
| | **FLUORENE** | 3100 | ND | | ND | | ND | |
| | **PHENANTHRENE** | 23000 | 0.40 | | ND | | ND | |
| | **ANTHRACENE** | 23000 | ND | | ND | | ND | |
| | **FLUORANTHENE** | 3100 | 0.71 | | ND | | ND | |
| | **PYRENE** | 2300 | 0.61 | | ND | | ND | |
| | **BENZO(A)ANTHRACENE** | .87 | ND | | ND | | ND | |
| | **BENZO(B)FLUORANTHENE** | .87 | 0.45 | | ND | | ND | |
| | **CHRYSENE** | 87 | ND | | ND | | ND | |
| | **BENZO(K)FLUORANTHENE** | 8.7 | ND | | ND | | ND | |

Notes:

* "> CAL" equals "X" when reported value is above characterization action level for this locale.
J flag - Numerical value is an estimated quantity.
ND indicates Non-Detect
Blank cells in result column indicate an analysis was not performed for that analyte.

Date generated: November 20, 2000

# Table 4-3
# Summary of Analytical Results

| | | | | | | | | |
|---|---|---|---|---|---|---|---|---|
| | | PRA | | | | | | |
| | | PRA Description | | | | | | |
| | | Sample Type | | | | | | |
| | | Sample Id | **BRK-FSB050-70002** | | **BRK-FSB050-70003** | | **BRK-FSB051-70001** | |
| | | Depth - ft bgs | **2 - 2.5** | | **3.5 - 4** | | **0 - 1** | |
| | | Collected Date | **06/16/00** | | **06/16/00** | | **06/16/00** | |
| | | Laboratory | **Lancaster Laboratories** | | **Lancaster Laboratories** | | **Lancaster Laboratories** | |
| | | Sample Collector | **IT Corporation (Fluor Daniel/GTI** | | **IT Corporation (Fluor Daniel/GTI** | | **IT Corporation (Fluor Daniel/GTI** | |
| | | Result Units | **MG/KG** | | **MG/KG** | | **MG/KG** | |
| Category | Analyte | Action Level | **Result Flag** | **> CAL*** | **Result Flag** | **> CAL*** | **Result Flag** | **> CAL*** |
| | **BENZO(A)PYRENE** | .087 | ND | | ND | | ND | |
| | **DIBENZO(A,H)ANTHRACENE** | .087 | ND | | ND | | ND | |
| | **BENZO(G,H,I)PERYLENE** | 2300 | ND | | ND | | ND | |
| | **INDENO(1,2,3-CD)PYRENE** | .87 | ND | | ND | | ND | |
| **P/PCB** | **AROCLOR-1254** | 1 | ND | | ND | | ND | |
| **METAL** | **BARIUM, TOTAL** | 5500 | 52.3 | | 47.1 | | 87.4 | |
| | **BERYLLIUM, TOTAL** | 160 | ND | | ND | | ND | |
| | **CADMIUM, TOTAL** | 39 | ND | | ND | | 2.2 | |
| | **CHROMIUM, TOTAL** | 230 | 11.6 J | | 11.1 J | | 34.6 J | |
| | **LEAD, TOTAL** | 400 | ND | | ND | | 102 | |
| | **NICKEL, TOTAL** | 1600 | 17.3 | | 18.1 | | 40.9 | |
| | **MERCURY, TOTAL** | 20 | ND | | ND | | 0.65 | |
| | **ARSENIC, TOTAL** | .43 | 10.8 | X | 15.3 | X | 25.6 | X |

Notes:

* "> CAL" equals "X" when reported value is above characterization action level for this locale.
J flag - Numerical value is an estimated quantity.
ND indicates Non-Detect
Blank cells in result column indicate an analysis was not performed for that analyte.

Date generated: November 20, 2000

# Table 4-3
# Summary of Analytical Results

| | | | | | | | | |
|---|---|---|---|---|---|---|---|---|
| | | PRA | | | | | | |
| | | PRA Description | | | | | | |
| | | Sample Type | | | | | | |
| | | Sample Id | **BRK-FSB051-70002** | | **BRK-FSB051-70003** | | **BRK-FSB052-70001** | |
| | | Depth - ft bgs | **2 - 2.5** | | **3.5 - 4** | | **0 - 1** | |
| | | Collected Date | **06/16/00** | | **06/16/00** | | **06/16/00** | |
| | | Laboratory | **Lancaster Laboratories** | | **Lancaster Laboratories** | | **Lancaster Laboratories** | |
| | | Sample Collector | **IT Corporation (Fluor Daniel/GTI** | | **IT Corporation (Fluor Daniel/GTI** | | **IT Corporation (Fluor Daniel/GTI** | |
| | | Result Units | **MG/KG** | | **MG/KG** | | **MG/KG** | |
| Category | Analyte | Action Level | **Result Flag** | **> CAL*** | **Result Flag** | **> CAL*** | **Result Flag** | **> CAL*** |
| **VOA** | **BENZENE** | 12 | ND | | ND | | ND | |
| | **TOLUENE** | 16000 | ND | | ND | | ND | |
| | **ETHYLBENZENE** | 7800 | ND | | ND | | ND | |
| | **XYLENE (TOTAL)** | 160000 | ND | | ND | | ND | |
| | **METHYLENE CHLORIDE** | 85 | ND | | ND | | ND | |
| | **ACETONE** | 7800 | ND | | ND | | 0.22 | |
| **BNA** | **NAPHTHALENE** | 1600 | ND | | ND | | ND | |
| | **ACENAPHTHENE** | 4700 | ND | | ND | | ND | |
| | **FLUORENE** | 3100 | ND | | ND | | ND | |
| | **PHENANTHRENE** | 23000 | ND | | ND | | ND | |
| | **ANTHRACENE** | 23000 | ND | | ND | | ND | |
| | **FLUORANTHENE** | 3100 | ND | | ND | | ND | |
| | **PYRENE** | 2300 | ND | | ND | | ND | |
| | **BENZO(A)ANTHRACENE** | .87 | ND | | ND | | ND | |
| | **BENZO(B)FLUORANTHENE** | .87 | ND | | ND | | ND | |
| | **CHRYSENE** | 87 | ND | | ND | | ND | |
| | **BENZO(K)FLUORANTHENE** | 8.7 | ND | | ND | | ND | |

Notes:

* "> CAL" equals "X" when reported value is above characterization action level for this locale.
J flag - Numerical value is an estimated quantity.
ND indicates Non-Detect
Blank cells in result column indicate an analysis was not performed for that analyte.

Date generated: November 20, 2000

# Table 4-3
# Summary of Analytical Results

| | | | | | | | | |
|---|---|---|---|---|---|---|---|---|
| | | PRA | | | | | | |
| | | PRA Description | | | | | | |
| | | Sample Type | | | | | | |
| | | Sample Id | **BRK-FSB051-70002** | | **BRK-FSB051-70003** | | **BRK-FSB052-70001** | |
| | | Depth - ft bgs | **2 - 2.5** | | **3.5 - 4** | | **0 - 1** | |
| | | Collected Date | **06/16/00** | | **06/16/00** | | **06/16/00** | |
| | | Laboratory | **Lancaster Laboratories** | | **Lancaster Laboratories** | | **Lancaster Laboratories** | |
| | | Sample Collector | **IT Corporation (Fluor Daniel/GTI** | | **IT Corporation (Fluor Daniel/GTI** | | **IT Corporation (Fluor Daniel/GTI** | |
| | | Result Units | **MG/KG** | | **MG/KG** | | **MG/KG** | |
| Category | Analyte | Action Level | **Result Flag** | **> CAL*** | **Result Flag** | **> CAL*** | **Result Flag** | **> CAL*** |
| | **BENZO(A)PYRENE** | .087 | ND | | ND | | ND | |
| | **DIBENZO(A,H)ANTHRACENE** | .087 | ND | | ND | | ND | |
| | **BENZO(G,H,I)PERYLENE** | 2300 | ND | | ND | | ND | |
| | **INDENO(1,2,3-CD)PYRENE** | .87 | ND | | ND | | ND | |
| **P/PCB** | **AROCLOR-1254** | 1 | ND | | ND | | ND | |
| **METAL** | **BARIUM, TOTAL** | 5500 | 47.0 | | 54.4 | | 120 | |
| | **BERYLLIUM, TOTAL** | 160 | ND | | ND | | ND | |
| | **CADMIUM, TOTAL** | 39 | ND | | ND | | ND | |
| | **CHROMIUM, TOTAL** | 230 | 11.1 J | | 12.1 J | | 20.9 J | |
| | **LEAD, TOTAL** | 400 | ND | | ND | | 39.2 | |
| | **NICKEL, TOTAL** | 1600 | 21.6 | | 22.7 | | 19.7 | |
| | **MERCURY, TOTAL** | 20 | ND | | ND | | ND | |
| | **ARSENIC, TOTAL** | .43 | 16.6 | X | 15.2 | X | 9.1 | X |

Notes:

* "> CAL" equals "X" when reported value is above characterization action level for this locale.
J flag - Numerical value is an estimated quantity.
ND indicates Non-Detect
Blank cells in result column indicate an analysis was not performed for that analyte.

Date generated: November 20, 2000

# Table 4-3
# Summary of Analytical Results

| | | | | | | | | |
|---|---|---|---|---|---|---|---|---|
| | | PRA | | | | | 28 | |
| | | PRA Description | | | | | CISTERN | |
| | | Sample Type | | | | | Normal Sample | |
| | | Sample Id | BRK-FSB052-70002 | | BRK-FSB052-70003 | | BRK-FSB053-70001 | |
| | | Depth - ft bgs | 2 - 2.5 | | 3.5 - 4 | | 3.5 - 4 | |
| | | Collected Date | 06/16/00 | | 06/16/00 | | 06/16/00 | |
| | | Laboratory | Lancaster Laboratories | | Lancaster Laboratories | | Lancaster Laboratories | |
| | | Sample Collector | IT Corporation (Fluor Daniel/GTI | | IT Corporation (Fluor Daniel/GTI | | IT Corporation (Fluor Daniel/GTI | |
| | | Result Units | MG/KG | | MG/KG | | MG/KG | |
| Category | Analyte | Action Level | Result Flag | > CAL* | Result Flag | > CAL* | Result Flag | > CAL* |
| VOA | BENZENE | 12 | ND | | ND | | ND | |
| | TOLUENE | 16000 | ND | | ND | | ND | |
| | ETHYLBENZENE | 7800 | ND | | ND | | ND | |
| | XYLENE (TOTAL) | 160000 | ND | | ND | | ND | |
| | METHYLENE CHLORIDE | 85 | ND | | ND | | | |
| | ACETONE | 7800 | ND | | ND | | | |
| BNA | NAPHTHALENE | 1600 | ND | | ND | | | |
| | ACENAPHTHENE | 4700 | ND | | ND | | | |
| | FLUORENE | 3100 | ND | | ND | | | |
| | PHENANTHRENE | 23000 | ND | | ND | | | |
| | ANTHRACENE | 23000 | ND | | ND | | | |
| | FLUORANTHENE | 3100 | 0.39 | | ND | | | |
| | PYRENE | 2300 | ND | | ND | | | |
| | BENZO(A)ANTHRACENE | .87 | ND | | ND | | | |
| | BENZO(B)FLUORANTHENE | .87 | ND | | ND | | | |
| | CHRYSENE | 87 | ND | | ND | | | |
| | BENZO(K)FLUORANTHENE | 8.7 | ND | | ND | | | |

Notes:

* "> CAL" equals "X" when reported value is above characterization action level for this locale.
J flag - Numerical value is an estimated quantity.
ND indicates Non-Detect
Blank cells in result column indicate an analysis was not performed for that analyte.

Date generated: November 20, 2000

# Table 4-3
# Summary of Analytical Results

| | | | | | | | | |
|---|---|---|---|---|---|---|---|---|
| | | PRA | | | | | 28 | |
| | | PRA Description | | | | | CISTERN | |
| | | Sample Type | | | | | Normal Sample | |
| | | Sample Id | BRK-FSB052-70002 | | BRK-FSB052-70003 | | BRK-FSB053-70001 | |
| | | Depth - ft bgs | 2 - 2.5 | | 3.5 - 4 | | 3.5 - 4 | |
| | | Collected Date | 06/16/00 | | 06/16/00 | | 06/16/00 | |
| | | Laboratory | Lancaster Laboratories | | Lancaster Laboratories | | Lancaster Laboratories | |
| | | Sample Collector | IT Corporation (Fluor Daniel/GTI | | IT Corporation (Fluor Daniel/GTI | | IT Corporation (Fluor Daniel/GTI | |
| | | Result Units | MG/KG | | MG/KG | | MG/KG | |
| Category | Analyte | Action Level | Result Flag | > CAL* | Result Flag | > CAL* | Result Flag | > CAL* |
| | BENZO(A)PYRENE | .087 | ND | | ND | | | |
| | DIBENZO(A,H)ANTHRACENE | .087 | ND | | ND | | | |
| | BENZO(G,H,I)PERYLENE | 2300 | ND | | ND | | | |
| | INDENO(1,2,3-CD)PYRENE | .87 | ND | | ND | | | |
| P/PCB | AROCLOR-1254 | 1 | ND | | ND | | ND | |
| METAL | BARIUM, TOTAL | 5500 | 70.5 | | 49.2 | | | |
| | BERYLLIUM, TOTAL | 160 | ND | | ND | | | |
| | CADMIUM, TOTAL | 39 | ND | | ND | | | |
| | CHROMIUM, TOTAL | 230 | 12.8 J | | 14.0 J | | | |
| | LEAD, TOTAL | 400 | ND | | 24.6 | | | |
| | NICKEL, TOTAL | 1600 | 21.0 | | 20.2 | | | |
| | MERCURY, TOTAL | 20 | ND | | ND | | | |
| | ARSENIC, TOTAL | .43 | 10.9 | X | 30.5 | X | 10.7 | X |

Notes:

* "> CAL" equals "X" when reported value is above characterization action level for this locale.
J flag - Numerical value is an estimated quantity.
ND indicates Non-Detect
Blank cells in result column indicate an analysis was not performed for that analyte.

Date generated: November 20, 2000

# Table 4-3
## Summary of Analytical Results

| | | | | | | | | |
|---|---|---|---|---|---|---|---|---|
| | | PRA | 30 | | | | | |
| | | PRA Description | EMERGENCY SHUTDOWN VALVES | | | | | |
| | | Sample Type | Normal Sample | | | | | |
| | | Sample Id | BRK-FSS066-40001 | | BRK-FSS067-40001 | | BRK-FSS068-40001 | |
| | | Depth - ft bgs | 0 - 0.5 | | 0 - 0.5 | | 0 - 0.5 | |
| | | Collected Date | 06/14/00 | | 06/14/00 | | 06/14/00 | |
| | | Laboratory | Lancaster Laboratories | | Lancaster Laboratories | | Lancaster Laboratories | |
| | | Sample Collector | IT Corporation (Fluor Daniel/GTI | | IT Corporation (Fluor Daniel/GTI | | IT Corporation (Fluor Daniel/GTI | |
| | | Result Units | MG/KG | | MG/KG | | MG/KG | |
| Category | Analyte | Action Level | Result Flag | > CAL* | Result Flag | > CAL* | Result Flag | > CAL* |
| VOA | BENZENE | 12 | | | | | | |
| | TOLUENE | 16000 | | | | | | |
| | ETHYLBENZENE | 7800 | | | | | | |
| | XYLENE (TOTAL) | 160000 | | | | | | |
| | METHYLENE CHLORIDE | 85 | | | | | | |
| | ACETONE | 7800 | | | | | | |
| BNA | NAPHTHALENE | 1600 | | | | | | |
| | ACENAPHTHENE | 4700 | | | | | | |
| | FLUORENE | 3100 | | | | | | |
| | PHENANTHRENE | 23000 | | | | | | |
| | ANTHRACENE | 23000 | | | | | | |
| | FLUORANTHENE | 3100 | | | | | | |
| | PYRENE | 2300 | | | | | | |
| | BENZO(A)ANTHRACENE | .87 | | | | | | |
| | BENZO(B)FLUORANTHENE | .87 | | | | | | |
| | CHRYSENE | 87 | | | | | | |
| | BENZO(K)FLUORANTHENE | 8.7 | | | | | | |

Notes:

* "> CAL" equals "X" when reported value is above characterization action level for this locale.
J flag - Numerical value is an estimated quantity.
ND indicates Non-Detect
Blank cells in result column indicate an analysis was not performed for that analyte.

Date generated: November 20, 2000

# Table 4-3
## Summary of Analytical Results

| | | | | | | | | |
|---|---|---|---|---|---|---|---|---|
| | | PRA | 30 | | | | | |
| | | PRA Description | EMERGENCY SHUTDOWN VALVES | | | | | |
| | | Sample Type | Normal Sample | | | | | |
| | | Sample Id | BRK-FSS066-40001 | | BRK-FSS067-40001 | | BRK-FSS068-40001 | |
| | | Depth - ft bgs | 0 - 0.5 | | 0 - 0.5 | | 0 - 0.5 | |
| | | Collected Date | 06/14/00 | | 06/14/00 | | 06/14/00 | |
| | | Laboratory | Lancaster Laboratories | | Lancaster Laboratories | | Lancaster Laboratories | |
| | | Sample Collector | IT Corporation (Fluor Daniel/GTI | | IT Corporation (Fluor Daniel/GTI | | IT Corporation (Fluor Daniel/GTI | |
| | | Result Units | MG/KG | | MG/KG | | MG/KG | |
| Category | Analyte | Action Level | Result Flag | > CAL* | Result Flag | > CAL* | Result Flag | > CAL* |
| | BENZO(A)PYRENE | .087 | | | | | | |
| | DIBENZO(A,H)ANTHRACENE | .087 | | | | | | |
| | BENZO(G,H,I)PERYLENE | 2300 | | | | | | |
| | INDENO(1,2,3-CD)PYRENE | .87 | | | | | | |
| P/PCB | AROCLOR-1254 | 1 | 0.79 | | 3.0 | X | 0.86 | |
| METAL | BARIUM, TOTAL | 5500 | | | | | | |
| | BERYLLIUM, TOTAL | 160 | | | | | | |
| | CADMIUM, TOTAL | 39 | | | | | | |
| | CHROMIUM, TOTAL | 230 | | | | | | |
| | LEAD, TOTAL | 400 | | | | | | |
| | NICKEL, TOTAL | 1600 | | | | | | |
| | MERCURY, TOTAL | 20 | | | | | | |
| | ARSENIC, TOTAL | .43 | | | | | | |

Notes:

* "> CAL" equals "X" when reported value is above characterization action level for this locale.
J flag - Numerical value is an estimated quantity.
ND indicates Non-Detect
Blank cells in result column indicate an analysis was not performed for that analyte.

Date generated: November 20, 2000

# Table 4-3
# Summary of Analytical Results

| | |
|---|---|
| PRA | |
| PRA Description | |
| Sample Type | |
| Sample Id | **BRK-FSS069-40001** |
| Depth - ft bgs | **0 - 0.5** |
| Collected Date | **06/14/00** |
| Laboratory | **Lancaster Laboratories** |
| Sample Collector | **IT Corporation (Fluor Daniel/GTI** |
| Result Units | **MG/KG** |

| Category | Analyte | Action Level | **Result Flag** | **> CAL*** |
|---|---|---|---|---|
| **VOA** | **BENZENE** | 12 | | |
| | **TOLUENE** | 16000 | | |
| | **ETHYLBENZENE** | 7800 | | |
| | **XYLENE (TOTAL)** | 160000 | | |
| | **METHYLENE CHLORIDE** | 85 | | |
| | **ACETONE** | 7800 | | |
| **BNA** | **NAPHTHALENE** | 1600 | | |
| | **ACENAPHTHENE** | 4700 | | |
| | **FLUORENE** | 3100 | | |
| | **PHENANTHRENE** | 23000 | | |
| | **ANTHRACENE** | 23000 | | |
| | **FLUORANTHENE** | 3100 | | |
| | **PYRENE** | 2300 | | |
| | **BENZO(A)ANTHRACENE** | .87 | | |
| | **BENZO(B)FLUORANTHENE** | .87 | | |
| | **CHRYSENE** | 87 | | |
| | **BENZO(K)FLUORANTHENE** | 8.7 | | |

Notes:

* "> CAL" equals "X" when reported value is above characterization action level for this locale.
J flag - Numerical value is an estimated quantity.
ND indicates Non-Detect
Blank cells in result column indicate an analysis was not performed for that analyte.

Date generated: November 20, 2000

# Table 4-3
# Summary of Analytical Results

| | | | | |
|---|---|---|---|---|
| | | PRA | | |
| | | PRA Description | | |
| | | Sample Type | | |
| | | Sample Id | **BRK-FSS069-40001** | |
| | | Depth - ft bgs | **0 - 0.5** | |
| | | Collected Date | **06/14/00** | |
| | | Laboratory | **Lancaster Laboratories** | |
| | | Sample Collector | **IT Corporation (Fluor Daniel/GTI** | |
| | | Result Units | **MG/KG** | |
| Category | Analyte | Action Level | **Result Flag** | **> CAL*** |
| | **BENZO(A)PYRENE** | .087 | | |
| | **DIBENZO(A,H)ANTHRACENE** | .087 | | |
| | **BENZO(G,H,I)PERYLENE** | 2300 | | |
| | **INDENO(1,2,3-CD)PYRENE** | .87 | | |
| **P/PCB** | **AROCLOR-1254** | 1 | 0.048 | |
| **METAL** | **BARIUM, TOTAL** | 5500 | | |
| | **BERYLLIUM, TOTAL** | 160 | | |
| | **CADMIUM, TOTAL** | 39 | | |
| | **CHROMIUM, TOTAL** | 230 | | |
| | **LEAD, TOTAL** | 400 | | |
| | **NICKEL, TOTAL** | 1600 | | |
| | **MERCURY, TOTAL** | 20 | | |
| | **ARSENIC, TOTAL** | .43 | | |

Notes:

* "> CAL" equals "X" when reported value is above characterization action level for this locale.
J flag - Numerical value is an estimated quantity.
ND indicates Non-Detect
Blank cells in result column indicate an analysis was not performed for that analyte.

Date generated: November 20, 2000

# Table 4-3
# Summary of Analytical Results

| | | | | | | | | |
|---|---|---|---|---|---|---|---|---|
| | | PRA | 11 | | 27 | | | |
| | | PRA Description | COUNTY ROADSIDE DITCH | | SUMP IN BASEMENT OF COMPRESSOR BUILDING | | | |
| | | Sample Type | Normal Sample | | Field Duplicate (Rep) | | Normal Sample | |
| | | Sample Id | BRK-FSW001-20001 | | BRK-FSW002-21001 | | BRK-FSW002-20001 | |
| | | Depth - ft bgs | 0 - 0 | | 0 - 0 | | 0 - 0 | |
| | | Collected Date | 06/15/00 | | 06/15/00 | | 06/15/00 | |
| | | Laboratory | Lancaster Laboratories | | Lancaster Laboratories | | Lancaster Laboratories | |
| | | Sample Collector | IT Corporation (Fluor Daniel/GTI) | | IT Corporation (Fluor Daniel/GTI) | | IT Corporation (Fluor Daniel/GTI) | |
| | | Result Units | UG/L | | UG/L | | UG/L | |
| Category | Analyte | Action Level | Result Flag | > CAL* | Result Flag | > CAL* | Result Flag | > CAL* |
| VOA | TOLUENE | 1000 | ND | | ND | | ND | |
| | XYLENE (TOTAL) | 10000 | ND | | ND | | ND | |
| | ACETONE | 610 | ND | | ND | | ND | |
| | 4-METHYL-2-PENTANONE | 140 | ND | | ND | | ND | |
| BNA | PHENANTHRENE | 1800 | ND | | ND | | ND | |
| | PYRENE | 180 | ND | | ND | | ND | |
| P/PCB | AROCLOR-1254 | .5 | ND | | ND | | ND | |
| METAL | BARIUM, TOTAL | 2000 | ND | | ND | | ND | |
| | CADMIUM, TOTAL | 5 | ND | | 5.9 | X | ND | |
| | CHROMIUM, TOTAL | 100 | ND | | 22.7 J | | 65.7 J | |
| | LEAD, TOTAL | 15 | 6.5 | | 187 J | X | 43.0 J | X |
| | NICKEL, TOTAL | 100 | ND | | ND | | ND | |
| | ARSENIC, TOTAL | 50 | ND | | 12.5 | | ND | |

Notes:

* "> CAL" equals "X" when reported value is above characterization action level for this locale.
J flag - Numerical value is an estimated quantity.
ND indicates Non-Detect
Blank cells in result column indicate an analysis was not performed for that analyte.

Date generated: November 20, 2000

# Table 4-3
# Summary of Analytical Results

| | | | | | | | | |
|---|---|---|---|---|---|---|---|---|
| | | PRA | 28 | | 29 | | | |
| | | PRA Description | CISTERN | | PLANT WATER WELL | | | |
| | | Sample Type | Normal Sample | | Field Duplicate (Rep) | | Normal Sample | |
| | | Sample Id | BRK-FML004-10001 | | BRK-FPW001-61001 | | BRK-FPW001-60001 | |
| | | Depth - ft bgs | 0 - 0 | | 0 - 0 | | 0 - 0 | |
| | | Collected Date | 06/16/00 | | 06/16/00 | | 06/16/00 | |
| | | Laboratory | Lancaster Laboratories | | Lancaster Laboratories | | Lancaster Laboratories | |
| | | Sample Collector | IT Corporation (Fluor Daniel/GTI | | IT Corporation (Fluor Daniel/GTI | | IT Corporation (Fluor Daniel/GTI | |
| | | Result Units | UG/L | | UG/L | | UG/L | |
| Category | Analyte | Action Level | Result Flag | > CAL* | Result Flag | > CAL* | Result Flag | > CAL* |
| VOA | TOLUENE | 1000 | ND | | ND | | ND | |
| | XYLENE (TOTAL) | 10000 | ND | | ND | | ND | |
| | ACETONE | 610 | 160000 | X | ND | | ND | |
| | 4-METHYL-2-PENTANONE | 140 | 510000 | X | ND | | ND | |
| BNA | PHENANTHRENE | 1800 | 750 | | ND | | ND | |
| | PYRENE | 180 | 540 J | X | ND | | ND | |
| P/PCB | AROCLOR-1254 | .5 | ND | | ND | | ND | |
| METAL | BARIUM, TOTAL | 2000 | ND | | 229 | | ND | |
| | CADMIUM, TOTAL | 5 | ND | | ND | | ND | |
| | CHROMIUM, TOTAL | 100 | ND | | ND | | ND | |
| | LEAD, TOTAL | 15 | 727 | X | 69.9 J | X | 101 J | X |
| | NICKEL, TOTAL | 100 | 46.6 | | ND | | ND | |
| | ARSENIC, TOTAL | 50 | 15.1 | | 57.8 | X | 50.0 | |

Notes:

* "> CAL" equals "X" when reported value is above characterization action level for this locale.
J flag - Numerical value is an estimated quantity.
ND indicates Non-Detect
Blank cells in result column indicate an analysis was not performed for that analyte.

Date generated: November 20, 2000

## ORGANIC DATA TABLE NOTES

**CATEGORY:**

BNA: Base/Neutral/Acid (BNA) extractable compounds are a sub-classification of Semi-Volatile Organic Compounds (SVOCs), and are referenced throughout the text as SVOCs.

P/PCB: Category refers to Pesticides/PCB analysis, however, no pesticides were analyzed for this site.

**QUALIFIER FLAGS:**

U This compound was not detected at or above the associated reporting limit or this compound should be considered "not-detected" since it was detected in an associated blank at a similar level.

J Quantitation is approximate due to limitations identified during the quality assurance review (data validation) or data verification process.

J+ Quantitation is approximate and may be biased high, due to limitations identified during the quality assurance review (data validation) or data verification process.

J- Quantitation is approximate and may be biased low, due to limitations identified during the quality assurance review (data validation) or data verification process.

R Unusable result; compound may or may not be present in this sample.

UJ This compound was not detected, but the reporting limit is probably higher due to a low bias identified during the quality assurance review or data verification process.

N This result should be considered a tentative qualitative identification.

## INORGANIC AND WET CHEMISTRY DATA TABLE NOTES

**QUALIFIER FLAGS:**

U This analyte was not detected at or above the associated reporting limit or this analyte should be considered "not-detected" since it was detected in an associated blank at a similar level.

J Quantitation is approximate due to limitations identified during the quality assurance review (data validation) or data verification process.

J+ Quantitation is approximate and may be biased high, due to limitations identified during the quality assurance review (data validation) or data verification process.

J- Quantitation is approximate and may be biased low, due to limitations identified during the quality assurance review (data validation) or data verification process.

R Unusable result; analyte may or may not be present in this sample.

UJ This analyte was not detected, but the reporting limit is probably higher due to a low bias identified during the quality assurance review or data verification process.

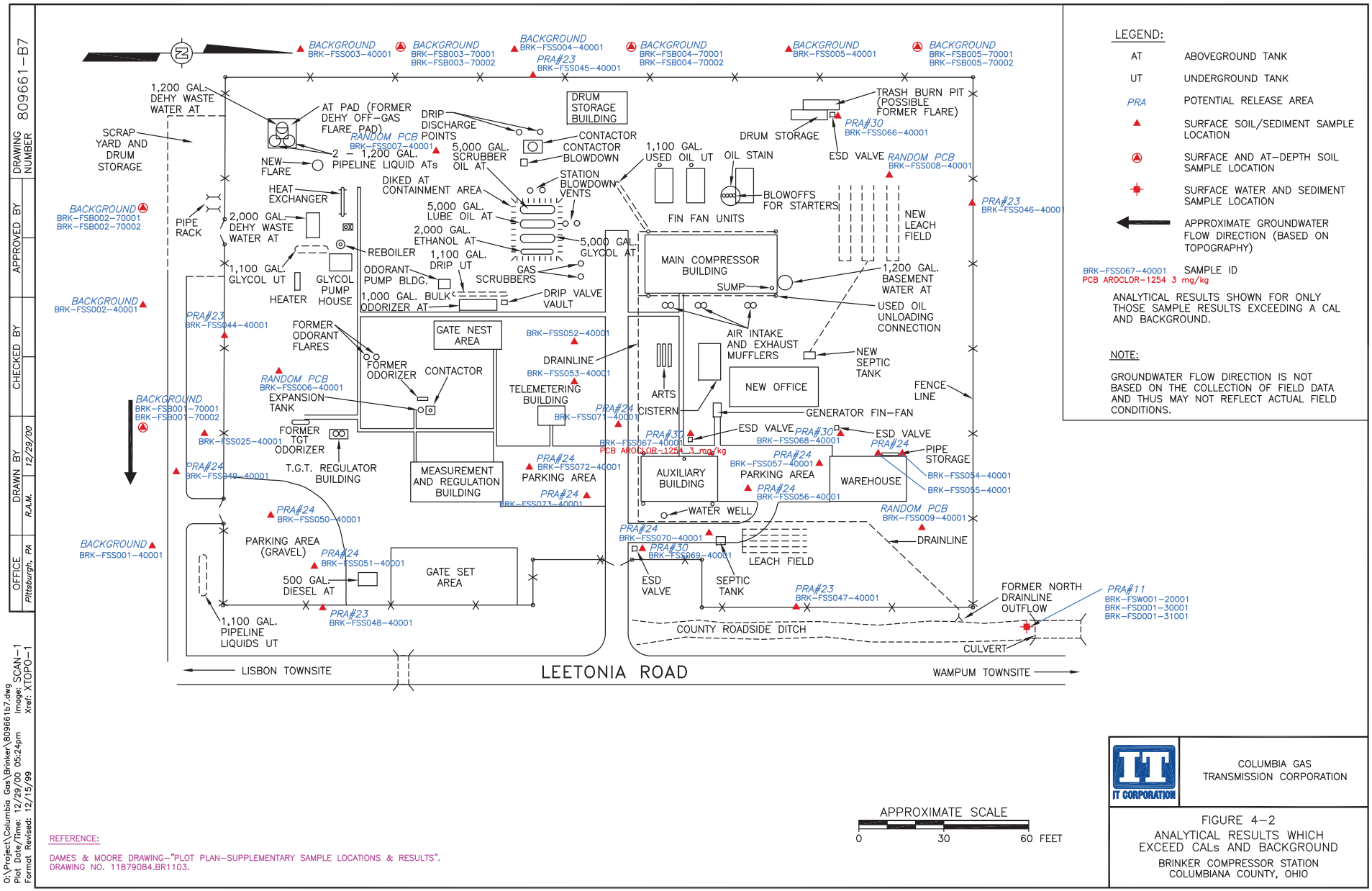


REFERENCE:

DAMES & MOORE DRAWING-"PLOT PLAN-SUPPLEMENTARY SAMPLE LOCATIONS & RESULTS". DRAWING NO. 11879084.BR1103.

IT CORPORATION

COLUMBIA GAS TRANSMISSION CORPORATION

FIGURE 4-2
ANALYTICAL RESULTS WHICH EXCEED CALs AND BACKGROUND
BRINKER COMPRESSOR STATION
COLUMBIANA COUNTY, OHIO

DRAWING NUMBER 809661-B7
APPROVED BY
CHECKED BY
DRAWN BY R.A.M. 12/29/00
OFFICE Pittsburgh, PA

O:\Project\Columbia Gas\Brinker\809661b7.dwg
Plot Date/Time: 12/29/00 05:24pm Image: SCAN-1
Format Revised: 12/15/99 Xref: XTOPO-1

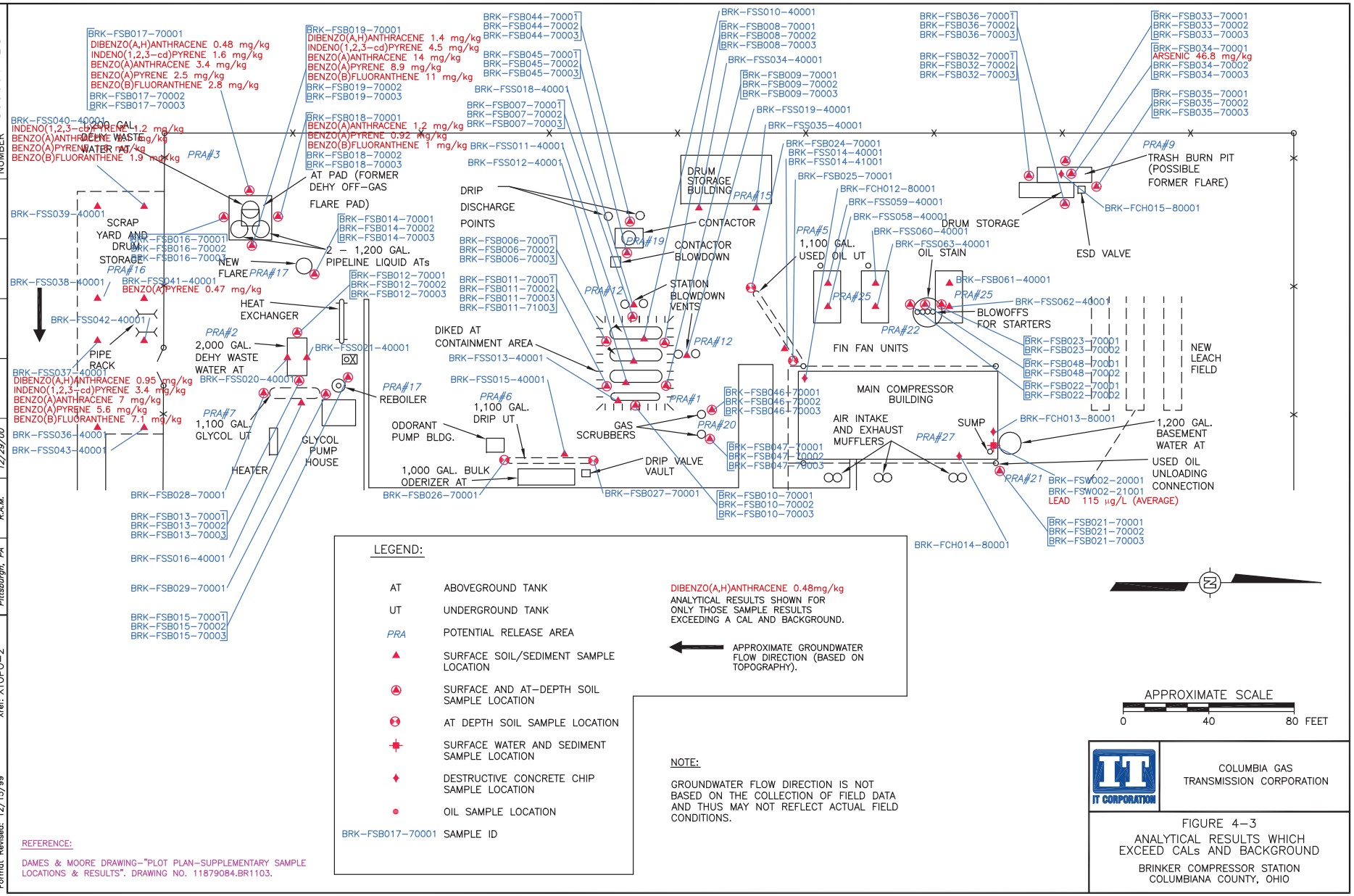


LEGEND:

| | |
|---|---|
| AT | ABOVEGROUND TANK |
| UT | UNDERGROUND TANK |
| PRA | POTENTIAL RELEASE AREA |
| ▲ | SURFACE SOIL/SEDIMENT SAMPLE LOCATION |
| | SURFACE AND AT-DEPTH SOIL SAMPLE LOCATION |
| | AT DEPTH SOIL SAMPLE LOCATION |
| | SURFACE WATER AND SEDIMENT SAMPLE LOCATION |
| ♦ | DESTRUCTIVE CONCRETE CHIP SAMPLE LOCATION |
| ● | OIL SAMPLE LOCATION |
| BRK-FSB017-70001 | SAMPLE ID |

DIBENZO(A,H)ANTHRACENE 0.48mg/kg
ANALYTICAL RESULTS SHOWN FOR ONLY THOSE SAMPLE RESULTS EXCEEDING A CAL AND BACKGROUND.

APPROXIMATE GROUNDWATER FLOW DIRECTION (BASED ON TOPOGRAPHY).

NOTE:

GROUNDWATER FLOW DIRECTION IS NOT BASED ON THE COLLECTION OF FIELD DATA AND THUS MAY NOT REFLECT ACTUAL FIELD CONDITIONS.

REFERENCE:

DAMES & MOORE DRAWING-"PLOT PLAN-SUPPLEMENTARY SAMPLE LOCATIONS & RESULTS". DRAWING NO. 11879084.BR1103.

IT CORPORATION

COLUMBIA GAS TRANSMISSION CORPORATION

FIGURE 4-3
ANALYTICAL RESULTS WHICH EXCEED CALs AND BACKGROUND

BRINKER COMPRESSOR STATION
COLUMBIANA COUNTY, OHIO

| DRAWING NUMBER | APPROVED BY | CHECKED BY | DRAWN BY | OFFICE |
|---|---|---|---|---|
| 809661-B8 | | | R.A.M. 12/29/00 | Pittsburgh, PA |

O:\Project\Columbia Gas\Brinker\809661b8.dwg
Plot Date/Time: 12/29/00 04:14pm Image: .
Format Revised: 12/15/99 Xref: XTOPO-2

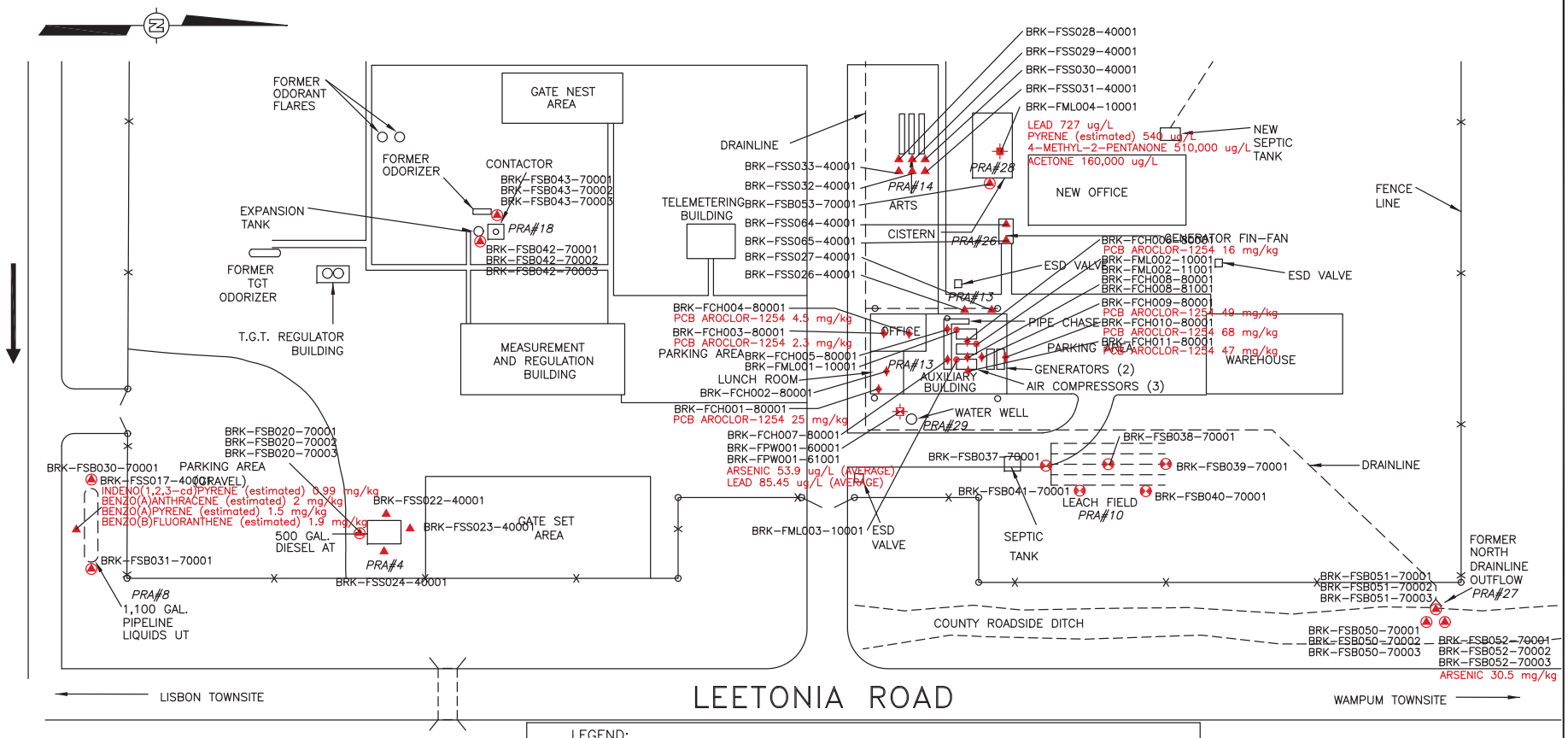


LEGEND:

| | |
|---|---|
| AT | ABOVEGROUND TANK |
| UT | UNDERGROUND TANK |
| PRA | POTENTIAL RELEASE AREA |
| ▲ | SURFACE SOIL/SEDIMENT SAMPLE LOCATION |
| ▲ | SURFACE AND AT-DEPTH SOIL SAMPLE LOCATION |
| ⊗ | AT DEPTH SOIL SAMPLE LOCATION |
| ✱ | SURFACE WATER AND SEDIMENT SAMPLE LOCATION |
| ♦ | DESTRUCTIVE CONCRETE CHIP SAMPLE LOCATION |
| ● | OIL SAMPLE LOCATION |
| ✱ | GROUNDWATER SAMPLE LOCATION |
| ← | APPROXIMATE GROUNDWATER FLOW DIRECTION (BASED ON TOPOGRAPHY) |

BRK-FSB052-70003 SAMPLE ID
ARSENIC 30.5 mg/kg

ANALYTICAL RESULTS SHOWN ONLY THOSE SAMPLE RESULTS EXCEEDING A CAL AND BACKGROUND.

NOTE:

GROUNDWATER FLOW DIRECTION IS NOT BASED ON THE COLLECTION OF FIELD DATA AND THUS MAY NOT REFLECT ACTUAL FIELD CONDITIONS.

APPROXIMATE SCALE
0 40 80 FEET

REFERENCE:

DAMES & MOORE DRAWING-"PLOT PLAN-SUPPLEMENTARY SAMPLE LOCATIONS & RESULTS". DRAWING NO. 11879084.BR1103.

IT CORPORATION

COLUMBIA GAS TRANSMISSION CORPORATION

FIGURE 4-4
ANALYTICAL RESULTS WHICH EXCEED CALs AND BACKGROUND
BRINKER COMPRESSOR STATION
COLUMBIANA COUNTY, OHIO

| OFFICE | DRAWN BY | CHECKED BY | APPROVED BY | DRAWING NUMBER |
|---|---|---|---|---|
| Pittsburgh, PA | R.A.M. 12/29/00 | | | 809661-B9 |

O:\Project\Columbia Gas\Brinker\80966169.dwg
Plot Date/Time: 01/03/01 01:56pm Image: .
Format Revised: 12/15/99 Xref: XTOPO-2