42-877-00101.
E. Witteard

B|BRAUN
SHARING EXPERTISE

RECEIVED
FEB 16 2021
Air & Radiation Division

February 12, 2021

Via Electronic and Overnight Delivery
Mark Wejkszner, P.E.
Air Quality Program Manager
Pennsylvania Department of Environmental Protection
Northeast Regional Office
2 Public Square
Wilkes-Barre, PA 18701
RA-EPNEstacktesting@pa.gov

AnnMary Bihl
PSIMS Administrator
Source Testing Section
Pennsylvania Department of Environmental Protection
Rachel Carson State Office Building
400 Market Street
Harrisburg, PA 17101
RA-EPstacktesting@pa.gov

Re: Plan Approval No. 39-00055B
Submission of Stack Test Report
B. Braun Medical Inc. Facility
901 Marcon Boulevard
Allentown, Pennsylvania

Dear Mr. Wejkszner and Ms. Bihl:

B. Braun Medical Inc. (B. Braun) was issued Plan Approval No. 39-00055B (the Plan Approval) on January 30, 2020. The Plan Approval authorized the installation and operation of a new control device at the facility, consisting of a Catalytic Oxidizer with Peak Shaver (Source ID C004). B. Braun commenced full operation of the control system on September 21, 2020, and performed emissions testing on December 15, 2020 according to the protocol approved by PADEP on November 30, 2020.

In accordance with Condition E.004 of the Plan Approval, please accept for review the enclosed emission test report prepared by Pace Environmental. By copy of this letter to EPA, this letter will likewise serve as submission of the results of a performance test pursuant to 40 C.F.R. Part 63, Subpart O, Ethylene Oxide Emissions Standards for Sterilization Facilities.

Please note that the emission test report contains confidential business information. This information is clearly marked. The confidential business information is process operating data that, if disclosed, would reveal production or process figures or methods that are unique to B. Braun and would adversely affect and cause substantial harm to B. Braun's competitive position by revealing trade secrets, including intellectual property rights. The information identified as confidential does not constitute emission data. As such, B. Braun requests that PADEP and EPA maintain the designation of this information as confidential and restrict the disclosure of such material consistent with Section 13.2 of the Pennsylvania Air Pollution Control Act, 35 P.S. § 4013.2, and 40 CFR Part 2, Subpart B. B. Braun is submitting both a public and a confidential copy of the test report.

Also enclosed for review is a Performance Evaluation Report prepared in accordance with 40 C.F.R. Part 63, Subpart O, Ethylene Oxide Emissions Standards for Sterilization Facilities for the continuous temperature monitoring system installed on the control device and used to demonstrate compliance with Subpart O and Plan Approval Condition E.006.

If you have any questions concerning these reports, please contact me at (610) 596-2474 or eric.geder@bbraunusa.com.

Sincerely,
B. Braun Medical Inc.

Eric Geder, CSP
EH&S Manager

cc: EPA Region 3
Director, Air Protection Division
1650 Arch Street
Philadelphia, PA 19103

CONFIDENTIAL VERSION

40 CFR 63 SUBPART O & PADEP PLAN APPROVAL COMPLIANCE EMISSIONS TEST REPORT FOR THE ANGUIL CATALYTIC OXIDIZER WITH PEAK SHAVER (SOURCE ID C004) AT B. BRAUN MEDICAL, INC. ALLENTOWN, PENNSYLVANIA

Plan Approval No. 39-00055B
Issuance Date: January 30, 2020
Primary Facility ID No.: 514477

Prepared for:

B. Braun Medical, Inc.
Attn: Mr. Eric Geder,
EHS&S Manager
901 Marcon Blvd.
Allentown, PA 18109
(610) 596-2474

Submitted to:

PADEP- Central Office
Attn: PSIMS Administrator
P.O. Box 8468
Harrisburg, PA 17105-8468
and
PADEP- NE Regional Office
Attn: Mr. Mark Wejkszner
2 Public Square
Wilkes-Barre, PA 18711-0790
and
U.S. EPA Region 3
1650 Arch Street
Philadelphia, PA 19103-2029

Prepared By:

Erica L. Bolek, QA/QC Manager
PACE Environmental
(PADEP Lab Reg ID No. 39-03352)
5260 West Coplay Road
Whitehall, PA 18052
(610) 262-3818

Test Date: December 15, 2020

Report Date: February 12, 2021

Please note: Confidential information within this report is denoted by red highlighting and red boxes.

Table of Contents

1.0 INTRODUCTION 1
2.0 QUALITY ASSURANCE SUMMARY 3
3.0 SUMMARY OF RESULTS 4
4.0 TECHNICAL DISCUSSION 5
5.0 PROCESS DESCRIPTION 6
5.1 Sterilization Process 6
5.2 Operating Conditions during Testing 7
5.2.1 Sterilization Chambers 7
5.2.2 Aeration Room 8
6.0 PERSONNEL AND CERTIFICATIONS 9
7.0 SAMPLE LOCATION 11
8.0 CYCLONIC FLOW 12

TABLES

1.1 Test Results Summary 1
1.2 Test Methodology – Sterilization Chamber 2
1.3 Test Methodology – Aeration Room 2
3.1 Executive Summary: Sterilization Chamber 4
3.2 Executive Summary: Aeration Room 4
5.1 Process Parameter Summary – Sterilization Chamber 8
5.2 Process Parameter Summary – Aeration Room 8

APPENDICES

A Protocol Correspondence & Approved Test Protocol
B Emission Calculations
C Run Data
D Calibration Data
E Field Sheets
F Stratification Check
G Process Flow Diagram & Recorded Process Data

1.0 INTRODUCTION

PACE Environmental (PACE) was retained by B. Braun Medical, Inc. (B. Braun) to perform an emissions compliance test at their facility located in Allentown, Pennsylvania. Testing was performed to determine ethylene oxide (EtO) emissions from the Catalytic Oxidizer (CatOx) with Peak Shaver (Source ID No. C004). B. Braun operates eight EtO sterilization chambers (Source ID Nos. 101 through 108) and one aeration room (Source ID No. 110). EtO emissions from these sources are controlled by Source ID No. C004.

The purpose of this test program was to demonstrate compliance with the test requirements and emission limits specified in the facility's Pennsylvania Department of Environmental Protection (PADEP) Plan Approval No. 39-00055B and 40 CFR 63 National Emission Standards for Hazardous Air Pollutants for Source Categories (NESHAP) Subpart O, "Ethylene Oxide Emissions Standards for Sterilization Facilities". Testing was performed in accordance with the approved compliance test protocol and follow up correspondence with the Department (found in Appendix A).

Three separate EtO test runs were performed simultaneously on the inlet and outlet of C004 during sterilization chamber operation to demonstrate compliance with the 99% emissions reduction requirement. Three separate 60-minute EtO test runs were performed on the outlet of C004 during aeration room operation to demonstrate compliance with the outlet only concentration-based emission limit of 1 part per million by volume, dry basis (ppmvd).

In our assessment of the results, this source is compliant with all applicable emission limits found in the facility permit.

Table 1.1 Test Results Summary

Plan Approval No.:	39-00055B		
Issuance Date:	January 30, 2020		
Primary Facility ID No.:	514477		
Source:	**Sterilization Chamber 7 (Source ID No. 107)**		
Control Device:	Catalytic Oxidizer with Peak Shaver (Source ID C004)		
Test Date:	**12/15/20**		
Tested Pollutant	**Average Test Result**	**Emission Limit**	**Compliance Status**
EtO (% emissions reduction, grams basis)	99.98%	≥99%	Compliant
Source:	**Aeration Room (Source ID No. 110)**		
Control Device:	Catalytic Oxidizer with Peak Shaver (Source ID C004)		
Test Date:	**12/15/20**		
Tested Pollutant	**Average Test Result**	**Emission Limit**	**Compliance Status**
EtO (ppmvd)	0.701 ppmvd	≤1 ppmvd	Compliant

1.0 INTRODUCTION (CONT'D)

Tables 1.2 and 1.3 below summarize the reference methods used during this test program.

Table 1.2 Test Methodology - Sterilization Chamber

Parameter	Method
Sterilization Chamber Outlet / Oxidizer Inlet	
EtO inlet loading to oxidizer	Calculated based on EtO cylinder charge weights, EtO mass percent of gas and documented temperature, pressure, and volume by B. Braun personnel.
Oxidizer Outlet	
Volumetric Flow Rate	U.S. EPA Method 1, "Sample and Velocity Traverses for Stationary Sources"
	U.S. EPA Method 2, "Determination of Stack Gas Velocity and Volumetric Flow Rate (Type S Pitot Tube)"
Oxygen & Carbon Dioxide	U.S. EPA Method 3A, "Determination of Oxygen and Carbon Dioxide Concentrations in Emissions from Stationary Sources (Instrumental Analyzer Procedure)"
Moisture	U.S. EPA Method 4, "Determination of Moisture Content in Stack Gases"
EtO	U.S. EPA Method 25A, "Determination of Total Gaseous Organic Concentration using a Flame Ionization Analyzer"

During sterilization, each test run lasted the duration of the first chamber evacuation, which is approximately 20 minutes. The duration of Runs 1, 2 and 3 were 22, 22, and 21 minutes, respectively. During each run, the moisture content was sampled for 30 minutes at a 2.0 inch of water (delta H) sampling rate to meet the method sample volume requirement of 21 dry standard cubic feet (dscf).

Table 1.3 Test Methodology- Aeration Room

Parameter	Method
Oxidizer Outlet	
Moisture	U.S. EPA Method 4, "Determination of Moisture Content in Stack Gases"
EtO	U.S. EPA Method 25A, "Determination of Total Gaseous Organic Concentration using a Flame Ionization Analyzer"

EtO outlet emissions are reported as ppmvd during both the sterilization and aeration test scenarios. EtO outlet mass emissions as pounds per hour (lb/hr) are reported during sterilization only. Emissions results during each test scenario are detailed in Tables 3.1 and 3.2.

2.0 QUALITY ASSURANCE SUMMARY

A compliance test protocol was submitted to the Department on October 14, 2020 and conditionally approved on November 25, 2020. In this protocol all sampling and analytical procedures were detailed.

Appendix A includes the conditionally approved protocol and all pertinent correspondence with PADEP.

All calibrations, QA/QC checks, and leak checks conducted during this test program were within the acceptable limits established by the U.S. EPA methods. All data supporting these findings can be found in the appendices of the report.

3.0 SUMMARY OF RESULTS

The results of the Sterilization Chamber and Aeration Room tests are detailed below in Tables 3.1 and 3.2, respectively. All results are below the permitted emission limits.

Table 3.1 Executive Summary: Sterilization Chamber

Run	1	2	3	Average	Emission Limit
Date	12/15/20	12/15/20	12/15/20		
Time	0836-0858	1310-1332	1709-1730		
Outlet Volumetric Flow Rate					
dscfm	15,727	15,663	18,129	16,506	------
Outlet Ethylene Oxide					
ppmv, dry	0.736	0.806	0.784	0.775	------
pounds/hour	0.0794	0.0865	0.0975	0.0878	------
grams	**13.4**	**14.7**	**15.8**	**14.6**	------
Inlet Ethylene Oxide					
grams	**60,973**	**64,705**	**62,336**	**62,671**	------
CatOx Efficiency					
%, EtO grams basis	**99.978**	**99.977**	**99.975**	**99.977**	**≥99%**

Table 3.2 Executive Summary: Aeration Room

Run	1	2	3	Average	Emission Limit
Date	12/15/20	12/15/20	12/15/20		
Time	1042-1142	1155-1255	1535-1635		
Ethylene Oxide Outlet					
ppmv, dry	**0.713**	**0.658**	**0.731**	**0.701**	**≤1.0**

4.0 TECHNICAL DISCUSSION

All testing was performed as detailed in the approved test protocol and agreed upon in follow up correspondence with Mr. Kenneth Kuschwara of PADEP (see Appendix A). No technical difficulties or protocol deviations were experienced during this test program.

5.0 PROCESS DESCRIPTION

B. Braun operates a medical device manufacturing facility in Allentown, PA. This facility operates a newly installed Anguil Environmental Systems, Inc. (Anguil) control device system which consists of a peak shaver and 3.0 million British thermal units per hour (MMBtu/hr) natural gas-fired catalytic oxidizer. The "Anguil System" controls EtO emissions from the eight Sterilizers and Aeration Room (Source IDs 101 – 108 and 110, collectively known as "Source Group 1" or "EtO Sterilizers"). The Anguil System control device is intended to replace the pre-existing Catalytic Oxidizer (Control Device ID C001) and Wet Scrubber Deoxx Unit (Control Device ID C002).

5.1 Sterilization Process

B. Braun manufactures medical devices for multiple health care applications. These instruments must be properly sterilized to ensure the safety of patients and health care providers, as well as to satisfy specific, rigorous standards imposed by the United States Food and Drug Administration (FDA). To accomplish these critical objectives, B. Braun implements appropriate procedures to achieve proper sterilization of the medical devices in the context of the manufacturing process at the facility.

The sterilization process utilizes EtO within the eight sterilization chambers. At the conclusion of the EtO dwell portion of the sterilization process, EtO is evacuated from the chamber using a vacuum pump that discharges to the Anguil System. From the sterilization chambers, the sterilized medical devices are taken to the Aeration Room where residual EtO is released from the sterilized devices and controlled with the Anguil System.

The peak shaver works to normalize the concentration of EtO sent to the catalytic oxidizer. The peak shaver recirculates water from a holding tank over a packed scrubber bed. The sterilizer exhaust runs countercurrent to the water and the EtO is absorbed into the water. After the sterilization cycle is finished, the EtO is stripped from the water via a fresh air source at a controlled rate and directed to the catalytic oxidizer. In the exhaust stream to the catalytic oxidizer, the peak shaver exhaust mixes with Aeration Room air in the interconnecting ductwork.

The catalytic oxidizer is comprised of three total CARULITE 500 pelletized catalyst beds. The catalyst bed temperatures are monitored using Type K thermocouples in accordance with 40 CFR §63.364(c) to ensure compliance with the manufacturer's minimum temperature recommendations as required by 40 CFR §63.363(b)(3). A performance evaluation of the temperature monitor was performed during the performance test as required by 40 CFR §63.8(e).

5.2 Operating Conditions during Testing

The following two sections describe the actual process operations during the sterilization chamber test and the aeration room test.

Initial operational compliance of the control device has been demonstrated by ensuring that the temperature in the oxidation chamber is maintained at a temperature above the minimum oxidation temperature recommended by the catalyst manufacturer while the catalytic oxidizer system is operating and controlling EtO emissions. During the stack test, the oxidizer inlet temperature was operated at a set point of 154.4°C/310°F, in order to ensure sufficient margin above the minimum inlet temperature recommended by the catalyst manufacturer (150°C/302°F). According to Plan Approval Condition E.III.6.c, ongoing compliance will be demonstrated by maintaining an inlet temperature above the minimum oxidation temperature achieved during the successful performance test (152.8°C/307°F).

All process data collected during the test program and forwarded to PACE is provided in Appendix G. Tables 5.1 and 5.2 summarize the process parameters recorded during each test scenario by B. Braun personnel.

5.2.1 Sterilization Chambers

Testing was performed on an empty sterilization chamber, charged with a typical amount of EtO, for the duration of the first evacuation under normal operating conditions (i.e., sterilization pressure and temperature) as required by 40 CFR §63.365(b)(1).

Sterilization Chamber 7 (Source ID No. 107) was used for compliance demonstration since it is the largest chamber with a total volume of 3,600 cubic feet and, when used in conjunction with sterilization process cycle #1, provides the highest loading of EtO to the control device that is possible under normal operating conditions. The chamber was charged with approximately 150 pounds of EtO. The first evacuation of EtO from the chamber lasted approximately 20 minutes. Three separate test runs were conducted during three separate first evacuation periods.

The amount of EtO loaded into the sterilizer was determined by weighing the EtO gas cylinder used to charge the sterilizer before and after charging. At the completion of the first evacuation, facility personnel recorded the chamber temperature, pressure and volume using pre-existing equipment.

The inlet and outlet temperatures (°F) for the catalyst bed were recorded at 1-minute intervals by facility personnel to document proper operation of the control device during testing.

Table 5.1 Process Parameter Summary- Sterilization Chamber

Run Number	1	2	3	Averages
Test Date	12/15/20	12/15/20	12/15/20	
Test Time	0836-0858	1310-1332	1709-1730	
Process/Control Device Data Summary				
EtO gas charged to chamber (lbs)	147	155	152	151.3
Initial chamber pressure (psia)	13.1	12.9	13.0	13.0
Initial chamber temperature (°C)	52.7	52.7	52.7	52.7
Final chamber pressure	1.6	1.5	1.8	1.6
Final chamber temperature	49.0	49.2	48.6	48.9
Minimum Inlet temperature during performance test (°F)	307[1]			N/A
Average CatOx Inlet temperature (°F)	313.4	313.3	312.9	313.2
Average CatOx Outlet temperature (°F)	349.9	353.1	352.6	351.9

[1]*Note the minimum temperature during sterilization was 308°F; however, the overall minimum during the entire performance test was 307°F.*

5.2.2 Aeration Room

During the aeration room tests, the room was loaded with the maximum number of sterilized equipment B. Braun could load into the room. The residual EtO from this sterilized equipment was released in the aeration room and vented to the oxidizer.

The inlet and outlet temperatures (°F) for the catalyst bed were recorded at 1-minute intervals by facility personnel to document proper operation of the control device during testing.

Table 5.2 Process Parameter Summary- Aeration Room

Run Number	1	2	3	Averages
Test Date	12/15/20	12/15/20	12/15/20	
Test Time	1042-1142	1155-1255	1535-1635	
Process/Control Device Data Summary				
Minimum Inlet temperature during performance test (°F)	307			N/A
Average CatOx Inlet temperature (°F)	309.7	309.8	309.8	309.8
Average CatOx Outlet temperature (°F)	331.6	323.2	329.5	328.1

6.0 PERSONNEL AND CERTIFICATIONS

Field Sampling on this Project was performed by:

Brandon Gallagher, John Donnelly and Larkin Recke

Calculations and Report Preparation were performed by:

Erica L. Bolek

CERTIFICATION STATEMENT:

I certify that "to the best of my knowledge" this source test report has been checked for completeness, and that the results presented herein are accurate, error-free, legible, and representative of the actual emissions measured during testing.

Submitted by:

Erica L. Bolek
QA/QC Manager

Reviewed by:

John Donnelly
Partner

Project/Field Personnel:

Brandon Gallagher
Project Manager

RESPONSIBLE-OFFICIAL CERTIFICATION

The below certification is for the compliance emissions test performed on the outlet stack of the Catalytic Oxidizer and Peak Shaver (C004) while testing both Sterilization Chamber and Aeration Room operating scenarios on December 15, 2020 at B. Braun Medical, Inc. in Allentown, Pennsylvania.

I certify that "to the best of my knowledge" this source test report has been checked for completeness, and that the results presented herein are accurate, error-free, legible, and representative of the actual emissions measured during testing.

Rex A. Boland

Signature

REX BOLAND

Name

V.P. + G.M.

Title

2-11-21

Date

7.0 SAMPLE LOCATION

EPA METHOD 1

Sample and Velocity Traverses for Stationary Sources

Customer	B. Braun
Facility	Medical equipment & sterilization
City, State	Allentown, PA
Test Date	12/15/20
Test Location	CatOx Outlet
Diameter of Stack	29.5 inches

Diameters Upstream of Disturbance (A)	8.1
Diameters Downstream of Disturbance (B)	14.2
Total No. of Traverse Points Required	16
Number of Ports	2
Traverse Points per Port	8
Traverse (Horizontal or Vertical)	V

MINIMUM NUMBER OF TRAVERSE POINTS FOR PARTICULATE AND NONPARTICULATE TRAVERSES

Duct Diameters Upstream from flow disturbances (Disturbance A)

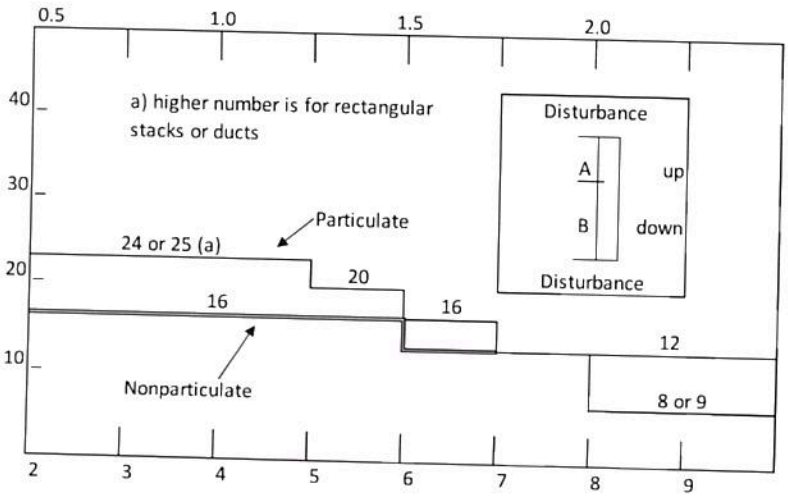

Duct Diameters Downstream from flow disturbances (Disturbance B)

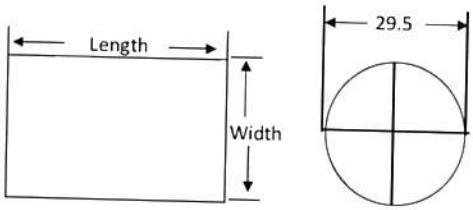

Deq = $\frac{2LW}{L+W}$ = _____

CROSS-SECTIONAL LAYOUT FOR RECTANGULAR STACKS	
Total Travese Points	Matrix
9	3x3
12	4x3
16	4x4
20	5x4
25	5x5

LOCATION OF TRAVERSE POINTS IN CIRCULAR STACKS

Point Number On A Diameter	(Percent of stack diameter from inside wall to traverse point) Number of Traverse Points on a Diameter				
	4	6	8	10	12
1	6.7	4.4	3.2	2.6	2.1
2	25.0	14.6	10.5	8.2	6.7
3	75.0	29.6	19.4	14.6	11.8
4	93.3	70.4	32.3	22.6	17.7
5		85.4	67.7	34.2	25.0
6		95.6	80.6	65.8	35.6
7			89.5	77.4	64.4
8			96.8	85.4	75.0
9				91.8	82.3
10				97.4	88.2
11					93.3
12					97.9

TRAVERSE POINT LOCATIONS

Number	Distance from Wall (inches)	Port Depth (inches)	Total Distance (inches)
1	0.9		0.9
2	3.1		3.1
3	5.7		5.7
4	9.5		9.5
5	20.0		20.0
6	23.8		23.8
7*	26.4		26.4
8	28.6		28.6
9			
10			
11			
12			

*Note: A complete set of flow traverses was measured prior to testing during normal process operations. The average differential pressure (Δp) reading was calculated, and the pitot tube was secured in the stack at the traverse point with the reading closest to the average Δp value (Traverse Pt #7). The Δp and stack temperature was recorded at one-minute intervals during each run. The pitot tube was monitored frequently to ensure proper alignment within the stack.

8.0 CYCLONIC FLOW

Location:
CatOx Outlet

Point	CYCLONIC FLOW	
	Rotation Angle, Degrees	
	Port A	Port B
1	2	4
2	2	3
3	0	1
4	0	0
5	0	0
6	0	0
7	0	1
8	0	1
Average	0.5	1.3
Overall Average	**0.9**	

Note: The absence of cyclonic flow is verified with an average angle less than 20 degrees.

APPENDIX A

PROTOCOL CORRESPONDENCE & APPROVED TEST PROTOCOL

erica@paceenvironmental.com

From: Kuschwara, Kenneth <kkuschwara@pa.gov>
Sent: Monday, November 30, 2020 3:05 PM
To: Eric Geder
Cc: Kempa, Raymond; Patel, Shailesh; Erica Bolek
Subject: RE: [External] RE: B. Braun Med Inc., Allentown Facility Baseline Test Protocol Review Completed - See Letter, Attached

Eric,

Your responses are acceptable for the upcoming performance test.

Have a great evening.

Kenneth Kuschwara, M.S. | Environmental Chemist 2
Department of Environmental Protection
Rachel Carson State Office Building
400 Market Street | Harrisburg, PA 17105-8468
Phone: 484.250.7517 | Fax: 717.772.2303
www.dep.pa.gov

SOURCE TESTING FAQs
https://www.dep.pa.gov/Business/Air/BAQ/BusinessTopics/SourceTesting/Pages/default.aspx

PRIVILEGED AND CONFIDENTIAL COMMUNICATION
The information transmitted is intended only for the person or entity to whom it is addressed and may contain confidential and/or privileged material. Any use of this information other than by the intended recipient is prohibited. If you receive this message in error, please send a reply e-mail to the sender and delete the material from any and all computers.

From: Eric Geder <eric.geder@bbraunusa.com>
Sent: Monday, November 30, 2020 2:51 PM
To: Kuschwara, Kenneth <kkuschwara@pa.gov>
Cc: Kempa, Raymond <rkempa@pa.gov>; Patel, Shailesh <spatel@pa.gov>; Erica Bolek <erica@paceenvironmental.com>
Subject: [External] RE: B. Braun Med Inc., Allentown Facility Baseline Test Protocol Review Completed - See Letter, Attached

ATTENTION: *This email message is from an external sender. Do not open links or attachments from unknown sources. To report suspicious email, forward the message as an attachment to CWOPA_SPAM@pa.gov.*

Kenneth,

We appreciate the timely review of the submitted test protocol for the B. Braun (Plan Approval #39-00055B) facility. Please see the attached response to the concerns presented in the letter sent on November 25th, 2020.
A copy of this letter was also send overnight via UPS.

Regards,
Eric

Eric Geder, CSP
EHS&S Manager

B|Braun Medical, Inc.
Phone: 610-596-2474
Cell: 484-387-9254
Email: eric.geder@bbraunusa.com

B BRAUN
SHARING EXPERTISE

Please consider the environment before printing this e-mail

From: Kuschwara, Kenneth [mailto:kkuschwara@pa.gov]
Sent: Wednesday, November 25, 2020 6:55 AM
To: Eric Geder <eric.geder@bbraunusa.com>; Erica Bolek <erica@paceenvironmental.com>
Cc: Kempa, Raymond <rkempa@pa.gov>; Patel, Shailesh <spatel@pa.gov>
Subject: B. Braun Med Inc., Allentown Facility Baseline Test Protocol Review Completed - See Letter, Attached

Eric and Erica,

The B. Braun Med Inc., Allentown Facility baseline test protocol review is completed - see letter, attached.

FYI – I will be out of the office beginning November 25th and return on November 30th. Have a great holiday.

Kenneth Kuschwara, M.S. | Environmental Chemist 2
Department of Environmental Protection
Rachel Carson State Office Building
400 Market Street | Harrisburg, PA 17105-8468
Phone: 484.250.7517 | Fax: 717.772.2303
www.dep.pa.gov

SOURCE TESTING FAQs
https://www.dep.pa.gov/Business/Air/BAQ/BusinessTopics/SourceTesting/Pages/default.aspx

PRIVILEGED AND CONFIDENTIAL COMMUNICATION
The information transmitted is intended only for the person or entity to whom it is addressed and may contain confidential and/or privileged material. Any use of this information other than by the intended recipient is prohibited. If you receive this message in error, please send a reply e-mail to the sender and delete the material from any and all computers.

The information contained in this communication is confidential, may be attorney-client privileged, may constitute inside information, and is intended only for the use of the addressee. It is the property of the company of the sender of this e-mail. Unauthorized use, disclosure, or copying of this communication or any part thereof is strictly prohibited and may be unlawful. If you have received this communication in error, please notify us immediately by return e-mail and destroy this communication and all copies thereof, including all attachments.

B BRAUN
SHARING EXPERTISE

November 30, 2020

Mr. Kenneth Kushwara
Environmental Chemist II
Source Testing Section
Pennsylvania Department of Environmental Protection
Rachel Carson State Office Building
400 Market Street
Harrisburg, PA 17101

Re: B. Braun Medical Inc.
Plan Approval No. 39-00055B

Dear Mr. Kuschwara,

Thank you for your timely review of the Test Protocol submitted for the Catalytic Oxidizer with Peak Shaver (Source ID: C004), used to control the emissions from the Sterilizers (130, 3700, 1200, 1250, and 1000 cu. ft.) (Source IDs: 101-108) and Aeration Room (Source ID: 110) at the B. Braun Medical, Inc. ("B. Braun") Facility in Hanover Twp., Lehigh County pursuant to Plan Approval No. 39-00055B.

Your November 23, 2020 letter indicated that the Test Protocol was unacceptable to the PADEP unless certain conditions listed therein are met. This letter will respond to the conditions listed in your letter, and requests confirmation that B. Braun's Test Protocol is acceptable based on the additional information provided herein. Please find B. Braun's responses below, following the conditions set forth in your letter:

1. Although the protocol specifies that the sterilizer chamber evacuation time is approximately 20 minutes, a performance test should consist of three 1-hour test runs. Increasing the number of proposed (3) chamber evacuations would be an acceptable option to increase total testing time for the sterilizer performance test.

Response: While B. Braun acknowledges that a performance test typically consists of three 1-hour runs, this condition is inconsistent with the 40 CFR Subpart O regulations and Plan Approval conditions governing the performance testing procedures. 40 CFR 63.365(b) and Plan Approval Condition E.II.5 describe the procedures to be used "to determine the efficiency of all types of control devices used to comply with 63.362(c), sterilization chamber vent standard." 40 CFR 63.365(b)(1), and Plan Approval Conditions E.II.5(b) and E.II.5(b)(1), all state that "These procedures shall be performed on an empty sterilization chamber, charged with a typical amount of ethylene oxide, **for the duration of the first evacuation under normal operating conditions (i.e. sterilization pressure and temperature).** [emphasis added]."

40 CFR 63.365(b)(1)(vi) and Plan Approval Condition E.II.5(b)(1)(vi) state that the performance test procedures referenced above shall be repeated three times, and the arithmetic average percent efficiency of the three runs shall determine the overall efficiency of the control device. Therefore, requiring additional evacuations would be inconsistent with Subpart O and Plan Approval requirements.

The general requirements for performance testing described in 40 CFR 63.7 do not require that the test runs be 1-hour in duration. In fact, 40 CFR 63.7(e)(3) states that "Each run shall be conducted for the time and under the conditions specific in the relevant standard." Likewise, the sampling and analytical methods described in the protocol do not specify a run duration.

Furthermore, increasing the number of sterilization chamber evacuations beyond what is required by the federal emission standard and Plan Approval conditions will add significantly to the cost and operational downtime required to carry out the performance test. Because of the wide flammable and explosive ranges of ethylene oxide concentrations, B. Braun's sterilization procedures are highly automated, and require multiple consecutive chamber evacuation purges using nitrogen and air to ensure safe operations. Because of this, it is not possible to perform multiple, consecutive evacuations of a chamber fully charged with ethylene oxide. Although the first evacuation of ethylene oxide takes approximately 20 minutes, the total sterilization process cycle time is approximately 5 hours start-to-start, and cannot be modified for safety reasons (and because such modification would not reflect the 'normal' operating conditions required for testing). Therefore, adding additional sterilization cycles to meet the 1-hour condition from your letter would add *at least* 30 hours of additional downtime to the sterilization process, at a time when B. Braun's medical device products and sterilization services are in great need.

For purposes of demonstrating compliance with the aeration room vent standard, and as described in the Test Protocol, B. Braun will perform three 1-hour test runs. However, for demonstrating compliance with the sterilization chamber vent standard, B. Braun respectfully requests that the PADEP allow it to utilize an approximately 20-minute test run, for consistency with representative facility operations and with the performance test procedures described in the federal emission standard, Plan Approval, and Test Protocol.

2. To the extent possible, the aeration room process should aerate C_2H_4O at maximum normal operating conditions (MNOC), which is worst-case conditions for VOC concentration emissions during the aeration test.

B. Braun will make every reasonable effort to ensure that the aeration room is as full of product as possible on the date of the performance test. While the amount of product in the aeration room at any given time is highly dependent on customer demand and order fulfillment, in all circumstances ethylene oxide concentrations from the aeration room vent are expected to be far lower than those from the sterilization chamber vent during the first evacuation.

3. For each sterilizer and aeration room test, a process summary table, displaying individual run and test average columns, and including all sources, parameters, and units, must be included in the test report. Include applicable pressures, temperatures, C_2H_4O usage, settings, rates, etc. to show actual operating conditions during the tests. Also include applicable process parameters for both the peak shaver and catalytic oxidizer processes (oxidizer parameters must include catalyst inlet/outlet temperatures and catalyst ΔP (if possible)). Any manually recorded process parameter raw data values shall be recorded at 15-minute intervals during each test run, where possible, and included in the test report. Also, include all electronic raw data sheets in the test report.

B. Braun will provide all applicable and possible process parameters and operating conditions in the test report, in both summary and electronic formats.

4. 40 CFR 63 Subpart O requires establishing a catalytic oxidizer minimum temperature operating limit during this initial performance test. However, an oxidizer catalyst inlet target (actual) temperature has not been proposed in the protocol. A proposed target temperature must be approved by the Northeast Regional Office prior to the performance test date.

B. Braun has been in contact with the Northeast Regional Office to discuss the catalytic oxidizer inlet temperature during performance testing. The recommended minimum inlet temperature identified by the catalyst manufacturer is 302°F. For performance testing, B. Braun has proposed a set point temperature of 310°F in order to provide a sufficient margin of compliance and to demonstrate compliance with the destruction efficiency and/or outlet concentration standard.

5. For EPA Method 25A, the VOC analyzer sampling system components must be heated to 350°F minimum to prevent condensation of VOCs.

According to the National Institute of Standards and Technology (NIST) Chemistry WebBook, ethylene oxide (the only VOC being evaluated during this performance test) has a boiling point of approximately 51°F. For this performance test, B. Braun proposes to heat the sampling system components to 250°F to prevent condensation of ethylene oxide.

Thank you for your consideration of this information. Please also allow this letter to confirm that performance testing will take place on December 15, 2020, commencing at approximately 8:00 a.m. This notice is made in accordance with Condition E.004(3) of the Plan Approval, which requires at least fifteen (15) days prior notification of the date and time of testing.

If you have any questions concerning this notification, please contact me at (610) 596-2474 or eric.geder@bbraunusa.com.

Sincerely,
B. Braun Medical Inc.

Eric Geder, CSP
EHS&S Manager

cc: Shailesh Patel, PADEP

November 23, 2020

Mr. Eric Geder
EHS&S Manager
B. Braun Medical, Inc.
901 Marcon Blvd.
Allentown, PA 18109

Re: 40 CFR 63 Subpart O Catalytic Oxidizer/Peak Shaver Baseline Test Protocol Review
B. Braun Med Inc.
Allentown Facility, Hanover Twp., Lehigh County

Dear Mr. Geder:

On October 14, 2020, the Department of Environmental Protection (DEP) received a pre-test protocol for the baseline testing to determine the VOC (as ethylene oxide; C_2H_4O) emissions and destruction efficiency (DE) from the Catalytic Oxidizer With Peak Shaver (Source ID: C004), used to control the emissions from the Sterilizers (130, 3700, 1200, 1250, and 1000 cu. ft.) (Source IDs: 101-108) and Aeration Room (Source ID: 110) at the Allentown Facility in Hanover Twp., Lehigh County.

The protocol is unacceptable to the DEP, unless all of the following conditions are met:

1. Although the protocol specifies that the sterilizer chamber evacuation time is approximately 20 minutes, a performance test should consist of three 1-hour test runs. Increasing the number of proposed (3) chamber evacuations would be an acceptable option to increase total testing time for the sterilizer performance test.
2. To the extent possible, the aeration room process should aerate C_2H_4O at maximum normal operating conditions (MNOC), which is worst-case conditions for VOC concentration emissions during the aeration test.
3. For each sterilizer and aeration room test, a process summary table, displaying individual run and test average columns, and including all sources, parameters, and units, must be included in the test report. Include applicable pressures, temperatures, C_2H_4O usage, settings, rates, etc. to show actual operating conditions during the tests. Also include applicable process parameters for both the peak shaver and catalytic oxidizer processes (oxidizer parameters must include catalyst inlet/outlet temperatures and catalyst ΔP (if possible)). Any manually recorded process parameter raw data values shall be recorded at 15-minute intervals during each test run, where possible, and included in the test report. Also, include all electronic raw data sheets in the test report.
4. 40 CFR 63 Subpart O requires establishing a catalytic oxidizer minimum temperature operating limit during this initial performance test. However, an oxidizer catalyst inlet target (actual) temperature has not been proposed in the protocol. A proposed target temperature must be approved by the Northeast Regional Office prior to the performance test date.

5. For EPA Method 25A, the VOC analyzer sampling system components must be heated to 350°F minimum to prevent condensation of VOCs.

The test report must contain the DEP laboratory registration ID for any company, engaged in the testing or analysis of environmental samples.

Acceptance of all testing is contingent upon the review of, and conformance to, the information in the FAQs, posted on the Source Testing Section's external website (https://www.dep.pa.gov/Business/Air/BAQ/BusinessTopics/SourceTesting/Pages/default.aspx); otherwise, there may be adverse consequences, including the potential rejection of affected test data, which may result in enforcement action.

It is my understanding that the testing will be conducted on December 15, 2020. Please notify the Northeast Regional Office and me at least thirty calendar days, or more if specified by the plan approval, prior to testing so that someone may be present to observe. Failure to do so could result in a rejection of the test results. Final acceptance of the test results is contingent upon fulfillment of all of the applicable requirements specified in Title 25, Chapter 139 of the PA Code; Plan Approval #39-00055B; 40 CFR 63 Subpart O; and the DEP's Source Testing Manual (Revision 3.3; November 2000). If there are any questions regarding this matter, please contact me at your convenience at kkuschwara@pa.gov or (484) 250-7517.

Sincerely,

Kenneth Kuschwara, M.S.
Environmental Chemist 2
Source Testing Section
Division of Source Testing and Monitoring

cc: Ms. Erica L. Bolek
QA/QC Manager
PACE Environmental
5260 West Coplay Road
Whitehall, PA 18052

Mr. Shailesh Patel, Air Quality Program, Northeast Regional Office
Reading File, Source Testing Section

RPS:KMK:kmk

40 CFR 63 SUBPART O & PADEP PLAN APPROVAL COMPLIANCE EMISSIONS TEST PROTOCOL FOR THE ANGUIL CATALYTIC OXIDIZER WITH PEAK SHAVER (SOURCE ID C004) AT B. BRAUN MEDICAL, INC. ALLENTOWN, PA

Plan Approval No. 39-00055B
Issuance Date: January 30, 2020
Primary Facility ID No. 514477

Prepared for:

B. Braun Medical, Inc.
Attn: Mr. Eric Geder
901 Marcon Blvd.
Allentown, PA 18109

Submitted to:

Pennsylvania Department of Environmental Protection- Central Office
Attn: PSIMS Administrator
P.O. Box 8468
Harrisburg, PA 17105-8468
and
Pennsylvania Department of Environmental Protection- Northeast Office
Attn: Mr. Mark Wejkszner
2 Public Square
Wilkes-Barre, PA 18701
and
U.S. EPA Region 3
1650 Arch Street
Philadelphia, PA 19103

Prepared By:

Erica L. Bolek
PACE Environmental
5260 West Coplay Road
Whitehall, PA 18052
PADEP Lab Reg ID No.: 39-03352

Protocol Submittal Date: October 14, 2020

Proposed Test Date: December 15, 2020

TABLE OF CONTENTS

1.0 INTRODUCTION 1
- 1.1 Contact Information 2
- 1.2 Permit Information 2
- 1.3 Source Information 2
- 1.4 Plant Safety Requirements 2

2.0 SOURCE DESCRIPTION 3
- 2.1 Sterilization Process 3
- 2.2 Proposed Operating Conditions during Testing 5
  - 2.2.1 Sterilization Chambers 5
  - 2.2.2 Aeration Room 6

3.0 TEST METHODOLOGY 7

4.0 SAMPLING LOCATION 9

5.0 SAMPLING PROCEDURES 11
- 5.1 PACE Environmental's Continuous Emission Monitoring System 11
- 5.2 Oxygen and Carbon Dioxide 14
- 5.3 Ethylene Oxide 14
- 5.4 Moisture 15
- 5.5 Volumetric Flow Rate 15

6.0 QUALITY ASSURANCE/QUALITY CONTROL 17
- 6.1 Audit Samples 17
- 6.2 Chain of Custody 17
- 6.3 Calibration Data 17
- 6.4 Calibration Procedures 17

7.0 REPORTING/RESULTS 18

8.0 CERTIFICATION 19

TABLES & FIGURES

- 1.1 Proposed Test Schedule 1
- 2.1 Process Flow Diagram 4
- 3.1 Test Methodology- Sterilization Chamber 7
- 3.2 Test Methodology- Aeration Room 7
- 3.3 EtO Emission Limits & Operating Ranges 8
- 4.1 Traverse Point Distances- Outlet 8
- 4.2 Outlet Sampling Location Diagram 10
- 5.1 Stratification Test Criteria 13

APPENDICES

- I Applicable Pages of the Facility Permit
- II Example Field Sheets
- III Sampling Train Diagrams

1.0 INTRODUCTION

PACE Environmental (PACE) has been retained by B. Braun Medical, Inc. (B. Braun) to provide sampling support in conducting emissions testing on the Catalytic Oxidizer (CatOx) with Peak Shaver (Source ID No. C004) located at their facility in Allentown, Pennsylvania. B. Braun operates eight ethylene oxide (EtO) sterilization chambers (Source ID Nos. 101 through 108) and one aeration room (Source ID No. 110). EtO emissions from these sources are controlled by Source ID No. C004.

The purpose of this test program is to demonstrate compliance with the test requirements and emission limits specified in the facility's Pennsylvania Department of Environmental Protection (PADEP) Plan Approval No. 39-00055B and 40 CFR 63 National Emission Standards for Hazardous Air Pollutants for Source Categories (NESHAP) Subpart O, "Ethylene Oxide Emissions Standards for Sterilization Facilities".

The facility is a source using 10 tons as defined in NESHAP Subpart O §63.361. This test protocol provides sampling and analytical procedures for testing the sterilization chambers and aeration room using PADEP and the United States Environmental Protection Agency (U.S. EPA) methodology.

Three separate EtO test runs will be performed by simultaneously evaluating the inlet and outlet conditions of C004 during sterilization chamber operation to determine compliance with the 99% emissions reduction requirement.

For the aeration room, EtO emissions compliance can be demonstrated by using the outlet only concentration-based emission limit of 1 part per million by volume, dry basis (ppmvd) or 99% emissions reduction. Compliance will be demonstrated using the outlet only emission limit.

PACE will perform the on-site sampling and will prepare the final compliance report, which will include the test results, calibrations, and all supporting field data and calculations to arrive at the reported results.

Table 1.1 below summarizes the proposed test schedule. **We have tentatively scheduled the test to be performed December 15, 2020.**

Table 1.1 Proposed Test Schedule

Day	Tentative Date	Activity
1	12/14/20	Travel/Set Up
2	12/15/20	Test sterilization chambers, then test aeration room, then remove equipment

1.1 Contact Information

B. Braun:

Contact Name:	Eric Geder
Phone:	(610) 596-2474
Email:	eric.geder@bbraunusa.com
Address:	**901 Marcon Blvd.** **Allentown, PA 18109**

Testing Contractor:

Contact Name:	Erica L. Bolek
Company Name:	PACE Environmental
Address:	5260 West Coplay Road Whitehall, PA 18052
Office Phone:	(610) 262-3818
Email:	erica@paceenvironmental.com

1.2 Permit Information

Plan Approval No.:	39-00055B
Permit Issuance Date:	January 30, 2020
Primary Facility ID No.:	514477

1.3 Source Information

Source ID Name:	Catalytic Oxidizer with Peak Shaver
Source ID No.:	C004
Regulation:	40 CFR 63 Subpart O and the facility's Plan Approval

1.4 Plant Safety Requirements

All personnel should wear hearing protection, safety shoes, safety glasses with side shields and a hard hat. During the COVID-19 pandemic, entry into the facility will require temperature screening, completion of self-declaration and issuance of a mask which needs to be worn at all times while at the facility.

2.0 SOURCE DESCRIPTION

B. Braun operates a medical instrument apparatus manufacturing facility in Allentown, PA. This facility operates a newly installed Anguil Environmental Systems, Inc. (Anguil) control device system which consists of a peak shaver and 3.0 million British thermal units per hour (MMBtu/hr) natural gas-fired catalytic oxidizer. The "Anguil System" controls EtO emissions from the eight Sterilizers and Aeration Room (Source IDs 101 – 108 and 110, collectively known as "Source Group 1" or "EtO Sterilizers"). The Anguil System control device is intended to replace the pre-existing Catalytic Oxidizer (Control Device ID C001) and Wet Scrubber Deoxx Unit (Control Device ID C002).

2.1 Sterilization Process

B. Braun manufactures medical instruments for multiple health care applications. These instruments must be properly sterilized to ensure the safety of patients and health care providers, as well as to satisfy specific, rigorous standards imposed by the United States Food and Drug Administration (FDA). To accomplish these critical objectives, B. Braun implements appropriate procedures to achieve proper sterilization of the medical instruments in the context of the manufacturing process at the facility.

The sterilization process utilizes EtO within the eight sterilization chambers. At the conclusion of the sterilization process, EtO is evacuated from the chamber using a vacuum pump that discharges to the Anguil System. From the sterilization chambers, the sterilized instruments are taken to the Aeration Room where residual EtO is released from the sterilized instruments and controlled with the Anguil System.

The peak shaver works to normalize the concentration of EtO sent to the catalytic oxidizer. The peak shaver recirculates water from a holding tank over a packed scrubber bed. The sterilizer exhaust runs countercurrent to the water and the EtO is absorbed into the water. After the sterilization cycle is finished, the EtO is stripped from the water via a fresh air source at a controlled rate and directed to the catalytic oxidizer. In the exhaust stream to the catalytic oxidizer, the peak shaver exhaust mixes with Aeration Room air in the interconnecting ductwork.

The catalytic oxidizer is comprised of three total CARULITE 500 pelletized catalyst beds. The catalyst bed temperatures are monitored using Type K thermocouples in accordance with 40 CFR §63.364(c) to ensure compliance with the manufacturer's minimum temperature recommendations as required by 40 CFR §63.363(b)(3). A performance evaluation of the temperature monitors will be performed during the performance test as required by 40 CFR §63.8(e).

A process flow diagram is provided in Figure 2.1 on the following page.

Figure 2.1 **Process Flow Diagram**

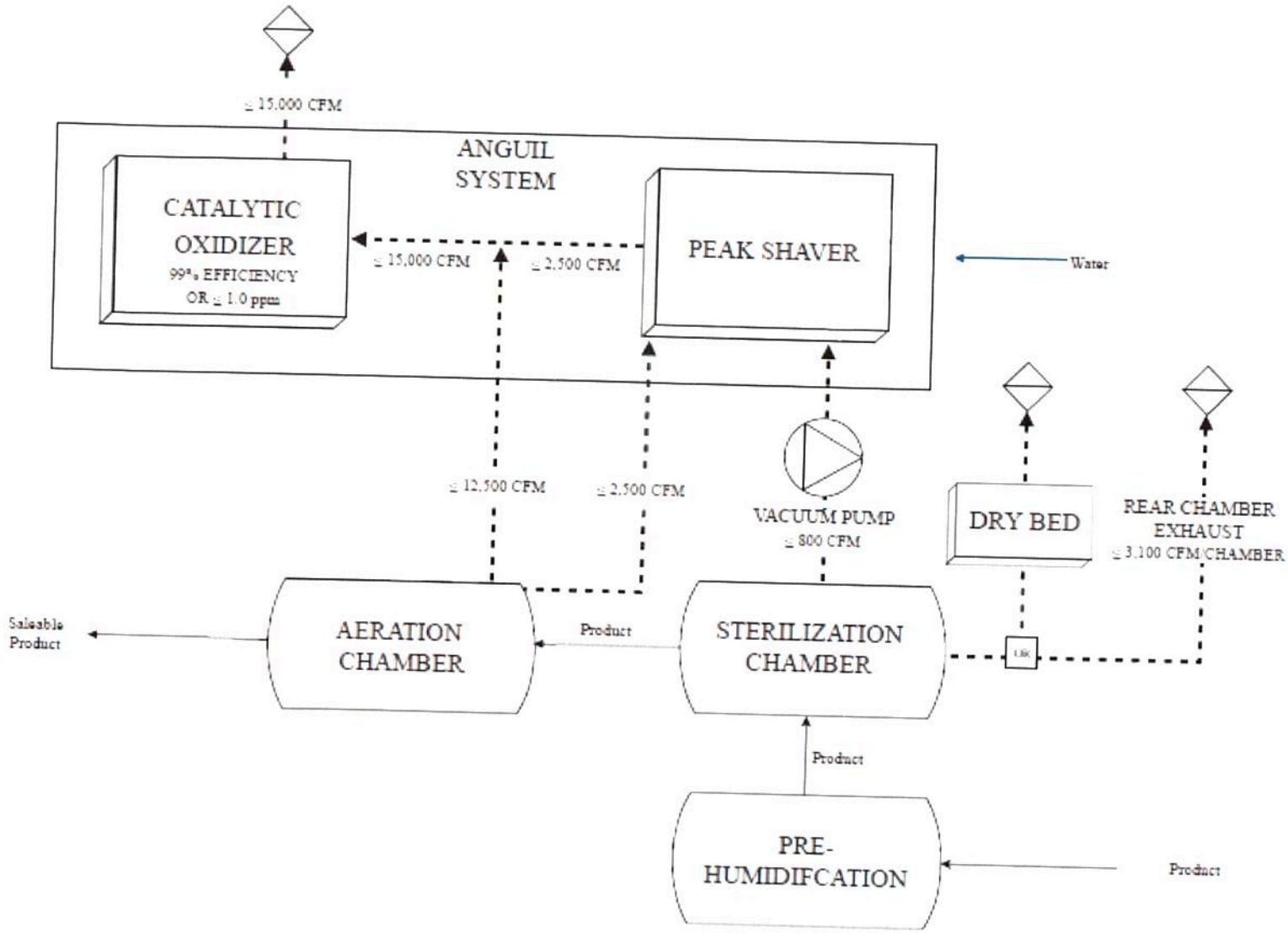

2.2 Proposed Operating Conditions during Testing

The following two sections describe the intended process operations during the sterilization chamber test and the aeration room test.

2.2.1 Sterilization Chambers

Compliance testing will be performed on an empty sterilization chamber, charged with a typical amount of EtO, for the duration of the first evacuation under normal operating conditions (i.e., sterilization pressure and temperature) as required by 40 CFR §63.365(b)(1).

The facility intends to use Sterilization Chamber 7 (Source ID No. 107) for compliance demonstration. It is the largest chamber with a total volume of 3,700 cubic feet and, when used in conjunction with sterilization process cycle #1, will provide the highest loading of EtO to the control device that is possible under normal operating conditions. The chamber will be charged with approximately 140 pounds of EtO since the facility has identified this as being the standard loading amount necessary to run sterilization process cycle #1 in chamber #7. The first evacuation of EtO from the chamber typically lasts approximately 20 minutes. Three separate test runs covering the entire duration of the first evacuation will be performed.

The amount of EtO loaded into the sterilizer will be determined by weighing the EtO gas cylinder used to charge the sterilizer before and after charging. The weights will be recorded to the nearest 45 grams (0.1 lb). The total mass of gas charged will be multiplied by the weight percent of EtO present in the gas. At the completion of the first evacuation, facility personnel will record the chamber temperature, pressure and volume using pre-existing equipment. The facility will provide PACE with this data. The calibration gas certificate of the EtO cylinder used to charge the sterilization chamber will be included in the test report.

PACE will use the information provided by B. Braun to calculate the amount of EtO charged in the sterilizer (W_c), the residual mass of EtO in the sterilizer (W_r) and the total mass of EtO at the inlet to the control device (W_i) using the equations provided in 40 CFR §63.365(b)(1)(i)(A), §63.365(b)(1)(ii) & §63.365(b)(1)(iii), respectively.

The inlet and outlet temperatures (°F) for the catalyst bed will be recorded at 15-minute intervals (or more frequently if possible) by facility personnel to document proper operation of the control device during testing.

2.2.2 Aeration Room

During the aeration room tests, the room will be loaded with the typical amount of medical equipment B. Braun would load into the room. The residual EtO from this sterilized equipment is released in the aeration room and vented to the oxidizer.

The inlet and outlet temperatures (°F) for the catalyst bed will be recorded at 15-minute intervals (or more frequently if possible) by facility personnel to document proper operation of the control device during testing.

3.0 TEST METHODOLOGY

The test program approach involves conducting a series of three test runs on both the sterilization chamber and aeration room for EtO emissions control using EPA Reference Methods. As previously noted, for the aeration room test, compliance will be demonstrated with the outlet only concentration-based emission limit. The outlet analyzer will be calibrated using EtO calibration standards as required by 40 CFR §63.365(c)(2).

This testing will be conducted over the course of one test day. The proposed measurement parameters, associated test methods, and test duration are summarized in Tables 3.1 and 3.2 below.

Table 3.1 Test Methodology - Sterilization Chamber[1]

Parameter	Method	Number of Runs & Duration[2]
Sterilization Chamber Outlet / Oxidizer Inlet		
EtO inlet loading to oxidizer	Calculated based on EtO cylinder charge weights, EtO mass percent of gas and documented temperature, pressure, and volume by B. Braun personnel.	3 ~20-minute runs
Oxidizer Outlet		
Volumetric Flow Rate	U.S. EPA Method 1, "Sample and Velocity Traverses for Stationary Sources"	Measurements taken in 1-minute intervals
	U.S. EPA Method 2, "Determination of Stack Gas Velocity and Volumetric Flow Rate (Type S Pitot Tube)"	
Oxygen & Carbon Dioxide	U.S. EPA Method 3A, "Determination of Oxygen and Carbon Dioxide Concentrations in Emissions from Stationary Sources (Instrumental Analyzer Procedure)"	3 ~20-minute runs
Moisture	U.S. EPA Method 4, "Determination of Moisture Content in Stack Gases"	3 30-minute[3] runs
EtO	U.S. EPA Method 25A, "Determination of Total Gaseous Organic Concentration using a Flame Ionization Analyzer"	3 ~20-minute runs

[1]The proposed methodology will be used to demonstrate compliance with the emission standards specified in 40 CFR §63.362(c).

[2]Test runs will last the duration of the first chamber evacuation, which is approximately 20 minutes.

[3]Moisture sampling time will most likely extend slightly beyond the length of the first evacuation to meet the method sample volume requirement of 21 dscf.

3.0 TEST METHODOLOGY (CONT'D)

Table 3.2 Test Methodology- Aeration Room[1]

Parameter	Method	Number of Runs & Duration
Oxidizer Outlet		
Moisture	U.S. EPA Method 4, "Determination of Moisture Content in Stack Gases"	3 60-minute runs
EtO	U.S. EPA Method 25A, "Determination of Total Gaseous Organic Concentration using a Flame Ionization Analyzer"	3 60-minute runs

[1]The proposed methodology will be used to demonstrate compliance with the emission standards specified in 40 CFR §63.362(d).

EtO outlet emissions will be reported as parts per million dry volume (ppmvd) during both the sterilization and aeration test scenarios. EtO outlet mass emissions as pounds per hour (lb/hr) will be reported during sterilization. The average of the three valid test runs will be used for compliance demonstration. Emission limits and proposed operating ranges are listed in Table 3.3 below.

Table 3.3 EtO Emission Limits & Operating Ranges

Source	Emission Limits	Expected In-Stack Emissions	Proposed Outlet Operating Span
Sterilization Chamber	≥99% emissions reduction	<1 ppm EtO	0-10 ppm as EtO
Aeration Room[1]	≤1 ppmvd **OR** ≥99% emissions reduction	<1 ppm EtO	0-10 ppm as EtO

[1]Compliance demonstration will be demonstrated using the concentration-based outlet emission limit.

Please note that the Subpart allows for sampling and analysis of EtO utilizing either Method 18 or 25A. PACE was unable to obtain a laboratory that could analyze via Method 18 at a low enough detection limit to demonstrate compliance with the emission limit of 1 ppm. Utilizing a Method 25A flame ionization analyzer (FIA) calibrated on a 10 ppm as EtO span provides a detection limit of 0.1 ppm, which is low enough to quantify EtO below the emission limit. PACE realizes that a 0-10 ppm span does not meet the span requirements set forth in Method 25A of being 1.5 to 2.5 times the applicable emission limit; however, it is essentially the lowest range that the analyzer is capable of being calibrated to and as previously stated allows for a detection limit sufficient to quantify EtO below the emission limit.

4.0 SAMPLING LOCATION

The oxidizer outlet sampling ports are located in a horizontal section of ductwork with an inside diameter of 29.5 inches, with two ports at 90° from each other on the same plane (located on the side and top of the duct). The sampling location is located 35 feet (420 inches) (EPA distance "A" = 14.2 diameters) upstream from the bend in duct to the stack exit and 20 feet (240 inches) (EPA distance "B" = 8.1 diameters) downstream from a bend in the duct (see Figure 4.2).

The procedures specified by EPA Method 1, "*Sample and Velocity Traverses for Stationary Sources*" will be followed to determine the number and location of traverse points used for the velocity traverses. According to the A & B distances, twelve total traverse points are required. All measurements will be field-verified and an accurate stack diagram with the sample location, stack dimensions, and the A & B distances will be included in the final report.

The appropriateness of the sample location will be evaluated by performing cyclonic flow and stratification checks prior to compliance testing. A twelve-point cyclonic flow check will be performed using Method 1 traverse points and six points in two ports. The sampling location is considered acceptable if the average cyclonic flow angle is less than 20°.

A three-point stratification check will also be performed using Method 7E traverse points and one port. If stratification is less than 5%, gaseous pollutant testing will be conducted at a single point in the stack. If stratification is between 5 and 10%, testing will occur at three CEM traverse points. Greater than 10% will result in a twelve-point traverse in one port during each test run.

Table 4.1 on the following page provides probe positions from the inner stack wall for both velocity/cyclonic flow and stratification traverses.

Table 4.1 Traverse Point Distances- Outlet

Traverse Point No.	Distance from Stack Wall (inches)		
	Stratification Check		Cyclonic & Volumetric Flow 12 Points (6 Points per Port)
	3 Points (1 Port Only)	12 Points (1 Port Only)	
1	4.9	0.6	1.3
2	14.8	2.0	4.3
3	24.6	3.5	8.7
4	----	5.2	20.8
5	----	7.4	25.2
6	----	10.5	28.2
7	----	19.0	----
8	----	22.1	----
9	----	24.3	----
10	----	26.0	----
11	----	27.5	----
12	----	28.9	----

Figure 4.2 Outlet Sampling Location Diagram

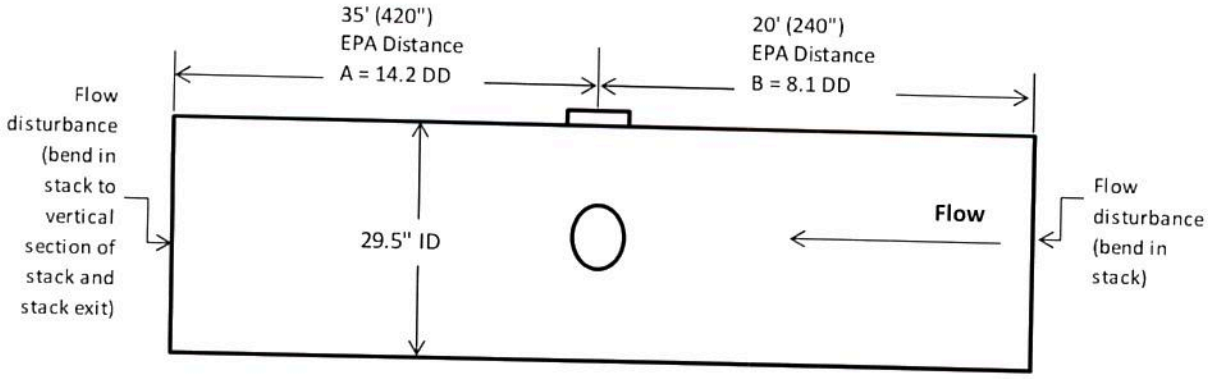

5.0 SAMPLING PROCEDURES

Emissions will be sampled and calculated using the additional information below:

- Location of the sampling points within the stack (using U.S. EPA Method 1)
- Measurement of volumetric flow rate using a Pitot tube (using U.S. EPA Method 2)
- Stack gas dry molecular weight (using U.S. EPA Method 3A)
- Moisture content in the exhaust gas (using U.S. EPA Method 4)

5.1 PACE Environmental's Continuous Emission Monitoring System

PACE operates a gaseous emissions measurement system that meets the performance criteria outlined in 40 CFR 60 Appendix A. The gas sample will be continuously extracted from the effluent gas stream and will be conveyed to the instrumental analyzer for determination of pollutant/diluent concentrations.

A data acquisition system (DAS) will be used to collect and log the data obtained from the analyzers. The DAS will record readings once every 5 seconds and reports the results in one-minute averages. Only one primary DAS will be used to capture calibration and test data.

A heated sample line will be used to transport the gas to the moisture removal system. The CEMS splits the sample, so a portion bypasses the conditioner and is sent directly to the hydrocarbon analyzer for simultaneous measurement of unconditioned, wet hydrocarbons, while the remainder of the sample is pulled through the conditioner. Sampling system temperatures will be recorded every fifteen minutes during each test run.

The moisture removal system will be a refrigerator-type condenser or equivalent to remove condensate from the sample gas while maintaining minimal contact between the condensate and the sample gas. A sample transport line will be used to transport the sample from the moisture removal system (except for M25A) to the sample pump, sample flow rate control and sample gas manifold.

The calibration valve assembly with a three-way valve assembly or equivalent will be used for introducing calibration gases either directly to the analyzer in direct calibration mode or into the measurement system at the probe in system calibration mode. A heated out-of-stack particulate filter will be used and included in the system bias test. A leak free pump will be used to pull the sample gas through the stream at a flow rate sufficient to minimize the response time of the measurement system. The pump will be constructed of any material that is non-reactive to the gas being sampled.

For calibration of the instrument, the span of the monitoring system is equivalent to the high-level calibration gas value (or 1.5 to 2.5 times the applicable emission limit for 25A) and will be selected such that is practicable, the in-stack emissions will be between 20-100% of the selected calibration span. If at any time during the run the measured gas concentration exceeds the readable range on the analyzer, the run may be considered invalid. If the average of any run exceeds the calibration span value, the run is invalid. When actual concentrations differ significantly from the standard, the span may need to be modified accordingly, such that the method criteria for span selection are met.

The **analyzer calibration error check** is performed on all analyzers (except the M25A FID) to establish the linearity and accuracy of the reference method analyzer. A total of three standards will be used to perform the direct calibration: a zero, a mid-range standard (40-60% of range), and a high-range standard (100% of range). The gases will be certified within an uncertainty of 2.0 percent in accordance with "EPA Traceability Protocol Assay and Certification of Gaseous Calibration Standards". If zero gas is used for the low-level gas, it shall meet the definition of "zero air material" in 40 CFR 72.2, as opposed to being an EPA Protocol gas.

During this check, no adjustments to the system will be made except those necessary to achieve the correct calibration gas flow rate to the analyzer. The analyzer responses to each calibration gas will be recorded. The analyzer calibration check will be considered invalid if the gas concentration displayed by the analyzer exceeds $\pm$2% of the span for any of the calibration gases. For O_2 and CO_2 analyzers only, an alternate calibration allowable of 1.0% difference may be used.

Once the analyzer calibration error check has been successfully completed, the **sampling system bias check** is performed for all analyzers (including U.S. EPA Method 25A FIDs). This check will be performed by introducing first an upscale gas (mid-range or high level, whichever more closely approximates the stack concentration) at the calibration valve assembly installed at the outlet of the sampling probe, and then the zero gas. During this check, no adjustments to the system will be made except those necessary to achieve the correct calibration gas flow at the analyzer. This check will be considered invalid if the difference between the calibration bias check and the calibration error check for the same calibration gas exceeds $\pm$5% of the span.

For Method 25A, the low-, mid-, and high-range standards (25-35%, 45-55%, and 80-90% of range) will be introduced at the junction of the heated hose and probe, after using and adjusting to the zero gas. The response to the three upscale standards must be within 5% of the certified value of each standard.

During the initial sampling system bias check, the measurement system response time is determined, as in Sections 8.2.5 & 8.2.6 of Method 7E (and Section 8.5 of M25A for the FID).

Documentation that the interference checks have been conducted in accordance with Section 8.2.7 of Method 7E will be made available on site and in the final report.

Stratification Determination will occur prior to sampling or as the first part of the first test run. The test will be performed in accordance with Section 8.1.2 of Method 7E. More than one instrumental test is being performed which requires the stratification to be performed only one time.

The stratification check will be conducted at three traverse points spaced on a line passing through the centroidal area at 16.7, 50.0 and 83.3 percent of the measurement line (See Tables 4.1 & 4.3 for stratification check point distances). Each point will be sampled for a minimum of twice the response time. The minimum number of traverse points required for sampling will be determined as outlined in Table 5.1 below.

Table 5.1 Stratification Test Criteria

Difference from mean	Stratification Class	Number of required sample points
±5%, or ±0.3% O_2 or CO_2 (as applicable)	Un-stratified	A single point that most closely matches the mean
Between ±5% and ±10%, or ±0.5% O_2 or CO_2	Minimally stratified	Three (3) sample points spaced at 16.7, 50.0 and 83.3 percent of the measurement line.
Greater than ±10%, and greater than ±0.5% O_2 or CO_2	Stratified	Twelve (12) sample points located consistent with EPA Method 1 criteria

Prior to starting the emission measurement test procedures, the sampling probe will be placed at the first sample point and sampling will begin at the same rate as the bias check. A constant rate of ±10% will be maintained during the entire sample run. Sampling will commence only after twice the response time has elapsed. Sampling will be conducted for an equal length of time at each traverse point.

Immediately following the completion of the test period and hourly during the test period, the zero calibration gas and an upscale calibration gas (mid-level or high-level as appropriate) will be re-introduced one at a time to the measurement system at the calibration valve assembly. No adjustments to the measurement system will be made until both low and upscale bias and drift checks are made. The analyzer response will be recorded.

If the post-run zero- and upscale bias (or 2-point system calibration error) checks are passed, but the zero or upscale drift exceeds ±3% of the span value, the run data are valid, but a 3- point calibration error test and a system bias (or 2-point system calibration error) check must be performed and passed before any more test runs are done.

For each test run, the pollutant/diluent run averages (except for M25A) will be adjusted for bias using Method 7E Equation 7E-5a if a non-zero gas is used for the low level calibration gas, or Equation 7E-5b if a zero gas is used as the low-level calibration gas.

The **measurement system performance specifications** are as follows:
Calibration Error: less than or equal to ±2% of the span for each calibration gas will be acceptable.
Sampling System Bias: less than or equal to ±5% of the span value (or bottle value for M25A) for the zero- level or upscale gas relative to the response of the analyzer during the calibration error check will be acceptable.
Drift: less than or equal to ±3% of the span value for the zero-level or upscale gas will be acceptable.

5.2 Oxygen and Carbon Dioxide

Summary: Sampling of O_2 and CO_2 on the outlet will be conducted in accordance with U.S. EPA Method 3A, "Determination of Oxygen and Carbon Dioxide Concentrations in Emissions from Stationary Sources (Instrumental Analyzer Procedure)". A continuous gas sample is extracted from a sampling point and analyzed for O_2 and CO_2 using a CAI ZRE analyzer or equivalent.

The analyzer measures concentrations of O_2 using a built-in fuel cell. CO_2 concentrations in the sample gas are measured using the NDIR absorption method. The NDIR operates on the principle that different atomic molecules have an absorption spectrum in the wave band of infrared rays. The intensity of absorption is determined using the Lambert-Beer Law. Following Beer's Law, the absorbance is proportional to the concentration of the associated sample gas.

Calibration Gases: The calibration gases used will be U.S. EPA Protocol I standards of O_2 and CO_2 for instrument span, and pre-purified N_2 for zero. Protocol I standards will be zero, 40-60%, and 100% of range. **The approximate calibration gas standards to be used for O_2 are 0%, 11.5% and 23%. The approximate calibration gas standards to be used for CO_2 are 0%, 5% and 10%.**

The calibration gases for the analyzer will be CO_2 in N_2, CO_2 in air or a calibration gas mixture as indicated in Section 7.1 of the method.

5.3 Ethylene Oxide

Summary: Ethylene oxide will be measured in accordance with U.S. EPA Method 25A. A continuous gas sample is extracted from the outlet stack and analyzed for EtO using a flame ionization detector (FID). The instrumental analyzer to be used during this test program is a VIG 200 or equivalent.

Calibration Gases: The calibration gases for the FID analyzer will be certified standards of EtO in nitrogen for instrument span, and pre-purified N_2 for zero. Calibration gas standards will be zero, 25-35%, 45-55% and 80-90% of the span value, in accordance with Method 25A. **The approximate calibration gas standards to be used are 0 ppm, 3 ppm, 5 ppm and 8.5 ppm.**

Sample System Operation: A representative exhaust gas sample is extracted from the emission source through a stainless-steel probe, heated Teflon sample line and heated pre-filter prior to being introduced to the instrument for immediate analysis. The system allows for transporting filtered stack gases to the individual instruments while maintaining the temperature well above the dew point of the gases. All instrument outputs are recorded by a paperless computer-based data acquisition system (DAS).

The FID uses a well-controlled flame to combust the hydrocarbons within the gas stream. Burner oven temperature is fixed at 190 degrees Celsius. Hydrocarbons are ionized by the flame, and the detector (typically a thin, platinum wire) measures this ionization energy of the carbon-hydrogen bonds that are broken. The detector's response is directly related to the number of carbon atoms contained in each organic molecule of the sample. Output from the detector is electronically converted into a concentration based on the compound (i.e. ethylene oxide) used to calibrate the FID.

5.4 Moisture

Summary: Moisture content will be measured on the outlet stack in accordance with U.S. EPA Method 4, "Determination of Moisture Content in Stack Gases". A gas sample is extracted at a constant rate; moisture is removed from the sample stream and determined gravimetrically.

Equipment: A condenser consisting of four impingers connected in a series with ground glass, leak-free fittings or any similar non-contaminating fittings will be used. The first, third and fourth impingers will be Greenburg-Smith design, modified by replacing the tip with a 1.3 cm. (1/2 in.) ID glass tube extending to about 1.3 cm from the bottom of the flask. The second impinger will be a Greenburg-Smith design with a standard tip. The first two impingers will contain known volumes of water, the third will be empty and the fourth will contain a known weight of 6 to 16 mesh indicating type silica gel, or equivalent desiccant. An ice bath container and crushed ice will be used as the cooling system to aid in condensing moisture.

The metering system used will be capable of measuring the volume within ±2%. It will include a vacuum gauge, leak-free pump, thermometers capable of measuring temperature within 3 degrees Celsius (°C) (5.4 degrees Fahrenheit (°F)) and a dry gas meter capable of measuring volume within ±2%. Atmospheric pressure will be looked up from historical logs kept by local national weather stations. A balance will be used to measure the condensed water and silica gel in the impingers to within 0.5 gram (g) or less.

A minimum total gas volume of 0.60 scm (21 scf) will be collected, at a rate no greater than 0.021 m^3/min (0.75 cfm). The moisture determination will be conducted simultaneous with, and for the same amount of time as, the pollutant emission run.

A Method 4 moisture train sampling diagram is included in Appendix II.

Sampling: After the impingers are iced down, a leak check will be performed with an acceptable rate of 4 percent of the average sampling rate or 0.02 cfm, whichever is less. During the run the sampling rate will be maintained within 10 percent of the constant rate. The dry gas meter will be recorded at the beginning and end of each sampling time increment and whenever the sampling is halted. More ice will be added, if necessary, to maintain a temperature of less than 20°C (68°F) at the silica gel outlet. When the run is complete, a post leak check is performed, and then the condensed moisture is measured to the nearest 0.5 g.

5.5 Volumetric Flow Rate

Summary: The oxidizer outlet volumetric flow rate will be measured in accordance with U.S. EPA Method 1, "Sample and Velocity Traverses for Stationary Sources" and U.S. EPA Method 2, "Determination of Stack Gas Velocity and Volumetric Flow Rate (Type S Pitot Tube)". A calibrated Type S Pitot tube is used to measure differential pressure readings across a stack. Temperature, pressure, and molecular weight of the gas are also measured to determine the average stack gas velocity.

Traverse points and sampling diagrams are included in Section 4.0.

Equipment: The following equipment will be used for flow measurements:

- S Type Pitot tube meeting the requirements of Method 2 Sections 6.1.1 and 6.1.2
- Inclined manometer- both a standard 10 inches water column ("WC) inclined vertical manometer and a mini-manometer of higher sensitivity with an approximate scale of 0.25"WC
- Type K thermocouple for stack temperature measurement

Sampling: The pre-test leak check of the Pitot tube and inclined manometer will be conducted as per Section 8.1 of the method. The manometer will be leveled and zeroed prior to use as well as periodically checked. The velocity head and temperatures will be measured at each traverse point. Ports will be stuffed to ensure sample integrity.

NESHAP Subpart O recommends measuring flow rate at one-minute intervals. We propose to perform a complete set of flow traverses during normal process operations. The average differential pressure (Δp) reading will be calculated, and the pitot tube will be secured in the stack at the traverse point with the reading closest to the average Δp value. The Δp and stack temperature will be recorded at one-minute intervals during each run. The pitot tube will be monitored frequently to ensure proper alignment within the stack.

The static pressure in the stack will be measured during the test as well as the atmospheric pressure. The stack gas dry molecular weight and moisture content will be determined in accordance with EPA Methods 3A and 4, respectively.

All calculations will be performed in accordance with Section 12 of the method.

Verification of cyclonic flow will be performed per section 11.4 of Method 1 prior to the start of sampling. Documentation will be supplied to the on-site observer and included in the final report. No deviations are proposed.

6.0 QUALITY ASSURANCE/QUALITY CONTROL

This test protocol was developed in accordance with the principles and recommendations outlined in the U.S. EPA Quality Assurance Handbook for Air Pollution Measurement Systems.

6.1 Audit Samples

No audit samples are required for this test program.

6.2 Chain of Custody

The procedures to be followed during this test program provide real-time data. Therefore, no chain-of-custody documentation will be necessary.

6.3 Calibration Data

All pre-test calibration data for sampling and equipment will be made available onsite, at the time of testing to any regulatory representatives. Copies of all calibration data will be included in the final report.

6.4 Calibration Procedures

Detailed standard operating procedures (SOPs) for applicable equipment and instrumentation are documented in the Quality Assurance/ Quality Control Manual and are summarized below.

Pitot Tubes: All S-Type Pitot tubes are initially provided a C_p of 0.84 by the manufacturer, in accordance with the specifications listed in U.S. EPA Method 2.1.

Before each use, a visual inspection of the Pitot tube is made to verify that the face openings are in alignment within the specifications shown in Figure 2-2 and 2-3 of U.S. EPA Method 2.

Dry Gas Meters: Critical orifices are used as the calibration standard, in accordance with U.S. EPA Method 5, Section 16.2. The dry gas meter is calibrated before and after each use. If the dry gas meter coefficient obtained before and after the test series differ by more than five percent, the calculations for the test series will be performed using the coefficient that gives the lower value of sample volume.

Thermocouples: Thermocouples are calibrated using an Omega Temperature Calibrator. The thermocouples are consecutively checked with a range of varying temperatures. If the absolute temperature reading between the thermocouple and the Omega agree within ±1.5% at all of the calibration points, the actual thermocouple reading is considered acceptable.

Calibration Gas Certifications: Calibration gas certificates are provided by the supplier and copies will be included in the final test report.

7.0 REPORTING/RESULTS

Emissions of EtO will be reported as ppmvd during both sterilization and aeration room test scenarios. EtO emissions reduction during sterilization will be calculated and reported as a percent, based on mass (as grams or pounds) as EtO inlet/outlet results.

The first page of the report will contain the Test Results Summary (TRS). The TRS will contain a table listing the test date(s); the source and source ID numbers; the average result(s) of each pollutant measured in units of the permit limit(s); permit limit(s) for each pollutant measured; permit number(s) where limit was obtained; and whether results demonstrate compliance or non-compliance with permit limit(s). All results in the TRS will be reported to three significant figures; emission calculations/supporting documentation will be reported to at least five significant figures.

The PADEP laboratory registration ID for any company engaged in the testing or analysis of environmental samples will be included in the final report.

A summary of the emissions results, including a comparison to the permitted emission limits, will be a fundamental part of the final test report. A copy of the complete report will be submitted to the PADEP Central and Northeast regional office and the U.S. EPA Region 3 office within 60 days of the test date.

8.0 CERTIFICATION

We, the undersigned, certify that *to the best of our knowledge*, the state and federal regulations, operating permits, or plan approvals applicable to each source or control device to be tested have been reviewed and that all testing requirements therein have been incorporated in this test plan.

Submitted by:

Erica L. Bolek
QA/QC Manager
PACE Environmental

Representative of the source owner/operator:

Signature

ERIC GEDER
Name

EHS & S MANAGER
Title

APPENDIX I

Applicable Pages of the Facility Permit

COMMONWEALTH OF PENNSYLVANIA
DEPARTMENT OF ENVIRONMENTAL PROTECTION
AIR QUALITY PROGRAM

PLAN APPROVAL

Issue Date: January 30, 2020 Effective Date: January 30, 2020
Expiration Date: January 30, 2021

In accordance with the provisions of the Air Pollution Control Act, the Act of January 8, 1960, P.L. 2119, as amended, and 25 Pa. Code Chapter 127, the Owner, [and Operator if noted] (hereinafter referred to as permittee) identified below is authorized by the Department of Environmental Protection (Department) to construct, install, modify or reactivate the air emission source(s) more fully described in the site inventory list. This Facility is subject to all terms and conditions specified in this plan approval. Nothing in this plan approval relieves the permittee from its obligations to comply with all applicable Federal, State and Local laws and regulations.

The regulatory or statutory authority for each plan approval condition is set forth in brackets. All terms and conditions in this permit are federally enforceable unless otherwise designated as "State-Only" requirements.

Plan Approval No. 39-00055B

Federal Tax Id - Plant Code: 23-2116774-1

Owner Information

Name: B BRAUN MED INC
Mailing Address: 901 MARCON BLVD
ALLENTOWN, PA 18109-9512

Plant Information

Plant: B BRAUN MED INC/ALLENTOWN
Location: 39 Lehigh County 39910 Hanover Township
SIC Code: 3841 Manufacturing - Surgical And Medical Instruments

Responsible Official

Name: REX BOLAND
Title: V.P. & G.M. ALLENTOWN OP.
Phone: (610) 596 - 2870

Plan Approval Contact Person

Name: ERIC GEDER
Title: EH&S MGR
Phone: (484) 240 - 8817

[Signature]
MARK J. WEJKSZNER, NORTHEAST REGION AIR PROGRAM MANAGER

SECTION A. Plan Approval Inventory List

Source ID	Source Name	Capacity/Throughput	Fuel/Material
101	STERILIZER - 1000 CU FT		
102	STERILIZER - 1000 CU FT		
103	STERILIZER - 1000 CU FT		
104	STERILIZER - 1000 CU FT		
105	STERILIZER - 1200 CU FT		
106	STERILIZER - 1250 CU FT		
107	STERILIZER - 3700 CU FT		
108	STERILIZER - 130 CU FT		
110	AERATION ROOM		
C004	CATALYTIC OXIDIZER WITH PEAK SHAVER		
S004	CATALYTIC OXIDIZER STACK		
S23	COMMON REAR STERILIZER EXHAUST STACK		

PERMIT MAPS

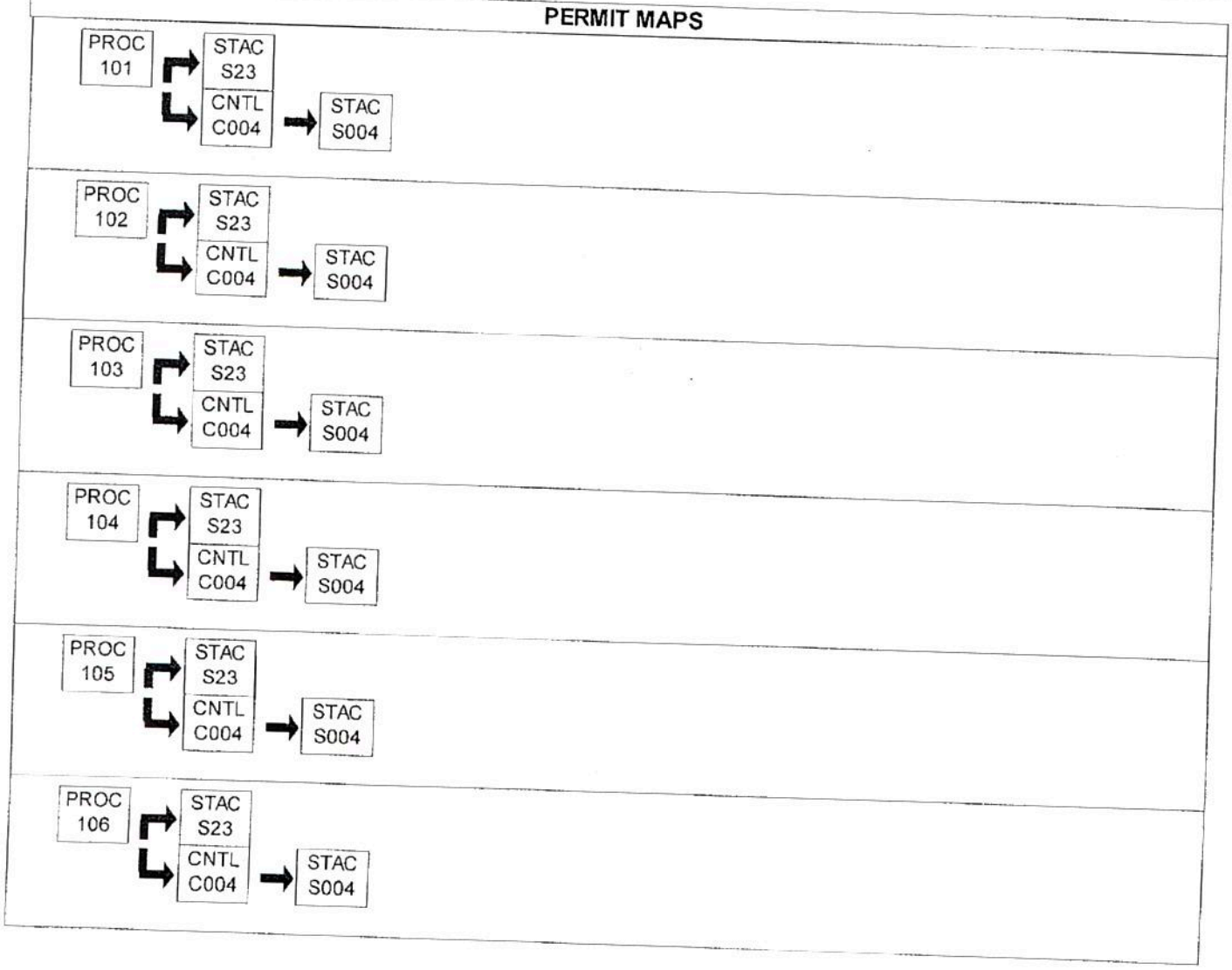

PERMIT MAPS

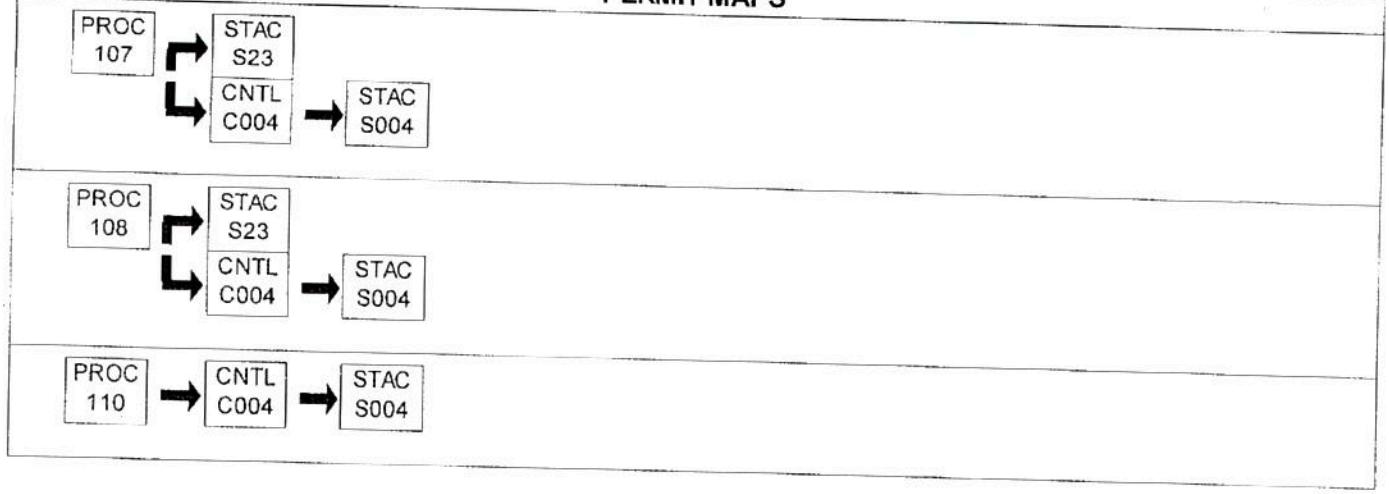
PROC 107
STAC S23
CNTL C004
STAC S004
PROC 108
STAC S23
CNTL C004
STAC S004
PROC 110
CNTL C004
STAC S004

SECTION E. Source Group Plan Approval Restrictions.

Group Name: GROUP 1
Group Description: ETO STERLIZERS
Sources included in this group

ID	Name
101	STERILIZER - 1000 CU FT
102	STERILIZER - 1000 CU FT
103	STERILIZER - 1000 CU FT
104	STERILIZER - 1000 CU FT
105	STERILIZER - 1200 CU FT
106	STERILIZER - 1250 CU FT
107	STERILIZER - 3700 CU FT
108	STERILIZER - 130 CU FT
110	AERATION ROOM

I. RESTRICTIONS.

Emission Restriction(s).

 # 001 [40 CFR Part 63 NESHAPS for Source Categories §40 CFR 63.362]
Subpart O -- Ethylene Oxide Emissions Standards for Sterilization Facilities
Standards.

(a) Each owner or operator of a source subject to the provisions of this subpart shall comply with these requirements on and after the compliance date specified in Sec. 63.360(g). The standards of this section are summarized in Table 1 of this section.

Table 1 of Section 63.362.-- Standards for Ethylene Oxide Commercial Sterilizers and Fumigators

Existing and New sources	Source type	Sterilization chamber vent	Aeration room vent	Chamber exhaust vent
Source size.....	<907 kg (<1 ton)	..No controls required; minimal recordkeeping requirements apply (see Sec. 63.367(c)).		
	>=907 kg and <9,070 kg (>=1 ton and <10 tons).	99% emission reduction (see Sec. 63.362(c)).	No control	No control
	>=9,070 kg (>=10 tons)	99% emission reduction (see Sec. 63.362(c)).	1 ppm maximum outlet concen-tration or 99% emission reduction (see Sec. 63.362(d)).	No control

1 Affected sources may show compliance by manifolding emissions to a control device used to comply with Sec. 63.362 (c) or (d) by reducing emissions by at least 99 percent.

(b) Applicability of emission limits. The emission limitations of paragraphs (c), (d), and (e) of this section apply during sterilization operation. The emission limitations do not apply during periods of malfunction.

(c) Sterilization chamber vent at sources using 1 ton. Each owner or operator of a sterilization source using 1 ton shall

SECTION E. Source Group Plan Approval Restrictions.

reduce ethylene oxide emissions to the atmosphere by at least 99 percent from each sterilization chamber vent.

(d) Aeration room vent at sources using 10 tons. Each owner or operator of a sterilization source using 10 tons shall reduce ethylene oxide emissions to the atmosphere from each aeration room vent to a maximum concentration of 1 ppmv or by at least 99 percent, whichever is less stringent, from each aeration room vent.

Throughput Restriction(s).

 # 002 [25 Pa. Code §127.12b]

Plan approval terms and conditions.

The permittee shall not exceed usage of 393,470 pounds of ethylene oxide at the sterilization chambers for any consecutive twelve (12) month period.

II. TESTING REQUIREMENTS.

 # 003 [25 Pa. Code §127.12b]

Plan approval terms and conditions.

(a) If the results of a stack test, performed as required by this approval, exceed the level specified in any condition of this approval, the Permitee shall take appropriate corrective actions. Within 30 days of the Permitee receiving the stack test results, a written description of the corrective actions shall be submitted to the Department. The Permitee shall take appropriate action to minimize emissions from the affected facility while the corrective actions are being implemented. The Department shall notify the Permitee within 30 days, if the corrective actions taken are deficient. Within 30 days of receipt of the notice of deficiency, the Permitee shall submit a description of additional corrective actions to the Department. The Department reserves the authority to use enforcement activities to resolve noncompliant stack tests.

(b) If the results of the required stack test exceed any limit defined in this plan approval, the test was not performed in accordance with the stack test protocol or the source and/or air cleaning device was not operated in accordance with the plan approval, then another stack test shall be performed to determine compliance. Within 120 days of the Permitee receiving the original stack test results, a retest shall be performed. The Department may extend the retesting deadline if the Permitee demonstrates, to the Department's satisfaction, that retesting within 120 days is not practicable. Failure of the second test to demonstrate compliance with the limits in the plan approval, not performing the test in accordance with the stack test protocol or not operating the source and/or air cleaning device in accordance with the plan approval may be grounds for immediate revocation of the plan approval to operate the affected source.

 # 004 [25 Pa. Code §127.12b]

Plan approval terms and conditions.

1. Source tests shall be conducted to demonstrate: (a) either the destruction/removal efficiency (DRE) of at least 99% (by weight) or an outlet EtO concentration of less than or equal to 1 ppmv (whichever is less stringent) for EtO emissions The Department reserves the right to require the owner or operator to conduct further tests at any time after the initial compliance tests.

2. At least sixty (60) calendar days prior to commencing an emission testing program required by this permit, a test protocol shall be submitted to the Department's Division of Source Testing and Monitoring and the Regional Office for review and approval. The test protocol shall meet all applicable requirements specified in the most current version of the Department's Source Testing Manual.

3. At least fifteen (15) calendar days prior to commencing an emission testing program required by this permit, written notification of the date and time of testing shall be provided to the Department's appropriate Regional Office. Written notification shall also be sent to the Department's Bureau of Air Quality, Division of Source Testing and Monitoring. The notification shall not be made without prior receipt of a protocol acceptance letter from the Department. The Department is under no obligation to accept the results of any testing performed without adequate advance written notice to the Deartment of such testing. In addition, the emissions testing shall not commence prior to receipt of a protocol acceptance letter from the Department.

4. A complete test report shall be submitted to the Department no later than sixty (60) calendar days after completion of the on-site testing portion of an emission test program.

SECTION E. Source Group Plan Approval Restrictions.

5. A complete test report shall include a summary of the emission results on the first page of the report indicating if each pollutant measured is within permitted limits and a statement of compliance or non-compliance with all applicable permit conditions. The summary results will include, at a minimum, the following information:

i. A statement that the owner or operator has reviewed the report from the emissions testing body and agrees with the findings;

II. Permit number(s) and condition(s) which are the basis for the evaluation;

iii. Summary of results with respect to each applicable permit condition; and

iv. Statement of compliance or non-compliance with each applicable permit condition.

 # 005 [40 CFR Part 63 NESHAPS for Source Categories §40 CFR 63.365]
Subpart O -- Ethylene Oxide Emissions Standards for Sterilization Facilities
Test methods and procedures.

(a) Performance testing. The owner or operator of a source subject to the emissions standards in Sec. 63.362 shall comply with the performance testing requirements in Sec. 63.7 of subpart A of this part, according to the applicability in Table 1 of Sec. 63.360, and in this section.

(b) First evacuation of the sterilization chamber. These procedures shall be performed on an empty sterilization chamber, charged with a typical amount of ethylene oxide, for the duration of the first evacuation under normal operating conditions (i.e., sterilization pressure and temperature).

(1) First evacuation of the sterilization chamber. These procedures shall be performed on an empty sterilization chamber, charged with a typical amount of ethylene oxide, for the duration of the first evacuation under normal operating conditions (i.e., sterilization pressure and temperature).

(i) The amount of ethylene oxide loaded into the sterilizer (Wc) shall be determined by either:

(A) Weighing the ethylene oxide gas cylinder(s) used to charge the sterilizer before and after charging. Record these weights to the nearest 45 g (0.1 lb). Multiply the total mass of gas charged by the weight percent ethylene oxide present in the gas.

(B) Installing calibrated rotameters at the sterilizer inlet and measuring flow rate and duration of sterilizer charge. Use the following equation to convert flow rate to weight of ethylene oxide:

where:

Wc=weight of ethylene oxide charged, g (lb)
Fv=volumetric flow rate, liters per minute (L/min) corrected to 20 deg.C and 101.325 kilopascals (kPa) (scf per minute (scfm) corrected to 68 deg.F and 1 atmosphere of pressure (atm)); the flowrate must be constant during time (t)t=time, min
%EOv=volume fraction ethylene oxide
SV=standard volume, 24.05 liters per mole (L/mole)=22.414 L/mole ideal gas law constant corrected to 20 deg.C and 101.325 kPa (385.32 scf per mole (scf/mole)=359 scf/mole ideal gas law constant corrected to 68 deg.F and 1 atm).
MW=molecular weight of ethylene oxide, 44.05 grams per gram-mole (g/g-mole) (44.05 pounds per pound-mole (lb/lb-mole)), or

(C) Calculating the mass based on the conditions of the chamber immediately after it has been charged using the following equation:

where:

P=chamber pressure, kPa (psia)
V=chamber volume, liters (L) (ft3)
R=gas constant, 8.313 L(kPa/g-mole((10.73 psia(ft3/mole (R)
T=temperature, K ((R)

SECTION E. Source Group Plan Approval Restrictions.

Note: If the ethylene oxide concentration is in weight percent, use the following equation to calculate mole fraction:

where:

WEO=weight percent of ethylene oxide
Wx=weight percent of compound in the balance of the mixture
MWx=molecular weight of compound in the balance gas mixture

(ii) The residual mass of ethylene oxide in the sterilizer shall be determined by recording the chamber temperature, pressure, and volume after the completion of the first evacuation and using the following equation:

where:

Wr=weight of ethylene oxide remaining in chamber (after the first evacuation), in g (lb)

(iii) Calculate the total mass of ethylene oxide at the inlet to the control device (Wi) by subtracting the residual mass (Wr) calculated in paragraph (b)(1)(ii) of this section from the charged weight (Wc) calculated in paragraph (b)(1)(i) of this section.

(iv) The mass of ethylene oxide emitted from the control device outlet (Wo) shall be calculated by continuously monitoring the flow rate and concentration using the following procedure.

(A) Measure the flow rate through the control device exhaust continuously during the first evacuation using the procedure found in 40 CFR part 60, appendix A, Test Methods 2, 2A, 2C, or 2D, as appropriate. (Method 2D (using orifice plates or Rootstype meters) is recommended for measuring flow rates from sterilizer control devices.) Record the flow rate at 1-minute intervals throughout the test cycle, taking the first reading within 15 seconds after time zero. Time zero is defined as the moment when the pressure in the sterilizer is released. Correct the flow to standard conditions (20 deg.C and 101.325 kPa (68 deg.F and 1 atm)) and determine the flow rate for the run as outlined in the test methods listed in paragraph (b) of this section.

(B) Test Method 18 or 25A, 40 CFR part 60, appendix A (hereafter referred to as Method 18 or 25A, respectivrely), shall be used to measure the concentration of ethylene oxide.

(1) Prepare a graph of volumetric flow rate versus time corresponding to the period of the run cycle. Integrate the area under the curve to determine the volume.

(2) Calculate the mass of ethylene oxide by using the following equation:

where:
Wo=Mass of ethylene oxide for each bag, g (lb)
C=concentration of ethylene oxide in ppmv
V=volume of gas exiting the control device corrected to standard conditions, L (ft3)
1/106=correction factor LEO/106 L TOTAL GAS (ft3EO/106ft3TOTAL GAS)

(3) Calculate the efficiency by the equation in paragraph (b)(1)(v) of this section.

(C) [Reserved]

(v) Determine control device efficiency (% Eff) using the following equation:

where:

% Eff = percent efficiency
Wi = mass flow rate into the control device
Wo = mass flow rate out of the control device

(vi) Repeat the procedures in paragraphs (b)(1) (i) through (v) of this section three times. The arithmetic average

percent efficiency of the three runs shall determine the overall efficiency of the control device.

(2) [Reserved]

(c) Concentration determination. The following procedures shall be used to determine the ethylene oxide concentration.

(1) Parameter monitoring. For determining the ethylene oxide concentration required in Sec. 63.364(e), follow the procedures in PS 8 or PS 9 in 40 CFR part 60, appendix B. Sources complying with PS 8 are exempt from the relative accuracy procedures in sections 2.4 and 3 of PS-8.

(2) Initial compliance. For determining the ethylene oxide concentration required in Sec. 63.363(c)(2), the procedures outlined in Method 18 or Method 25 A (40 CFR part 60, appendix A) shall be used. A Method 18 or Method 25A test consists of three 1-hour runs. If using Method 25A to determine concentration, calibrate and report Method 25A instrument results using ethylene oxide as the calibration gas. The arithmetic average of the ethylene oxide concentration of the three test runs shall determine the overall outlet ethylene oxide concentration from the control device.

(d) Efficiency determination at the aeration room vent (not manifolded). The following procedures shall be used to determine the efficiency of a control device used to comply with Sec. 63.362(d), the aeration room vent standard.

(1) Determine the concentration of ethylene oxide at the inlet and outlet of the control device using the procedures in Method 18 or 25A in 40 CFR part 60, appendix A. A test is comprised of three 1-hour runs.

(2) Determine control device efficiency (% Eff) using the following equation:

Where:

% Eff = percent efficiency
W<INF>i</INF> = mass flow rate into the control device
W<INF>O</INF> = mass flow rate out of the control device

(3) Repeat the procedures in paragraphs (d)(1) and (2) of this section three times. The arithmetic average percent efficiency of the three runs shall determine the overall efficiency of the control device.

(e) Determination of baseline parameters for acid-water scrubbers. The procedures in this paragraph shall be used to determine the monitored parameters established in Sec. 63.363(b), (d), or (e) for acid-water scrubbers and to monitor the parameters as established in Sec. 63.364(b).

(1) Ethylene glycol concentration. For determining the ethylene glycol concentration, the facility owner or operator shall establish the maximum ethylene glycol concentration as the ethylene glycol concentration averaged over three test runs; the sampling and analysis procedures in ASTM D 3695-88, Standard Test Method for Volatile Alcohols in Water By Direct Aqueous-Injection Gas Chromatography, (incorporated by reference--see Sec. 63.14) shall be used to determine the ethylene glycol concentration.

(2) Scrubber liquor tank level. For determining the scrubber liquor tank level, the sterilization facility owner or operator shall establish the maximum liquor tank level based on a single measurement of the liquor tank level during one test run.

(f) [Reserved]

(g) An owner or operator of a sterilization facility seeking to demonstrate compliance with the standards found at Sec. 63.362(c), (d), or (e) with a control device other than an acid-water scrubber or catalytic or thermal oxidation unit shall provide to the Administrator the information requested under Sec. 63.363(f). The owner or operator shall submit: a description of the device; test results collected in accordance with Sec. 63.363(f) verifying the performance of the device for controlling ethylene oxide emissions to the atmosphere to the levels required by the applicable standards; the appropriate operating parameters that will be monitored; and the frequency of measuring and recording to establish continuous compliance with the standards. The monitoring plan submitted identifying the compliance monitoring is subject to the Administrator's approval. The owner or operator of the sterilization facility shall install, calibrate, operate, and maintain the monitor(s) approved by the Administrator based on the information submitted by the owner or operator. The owner or

operator shall include in the information submitted to the Administrator proposed performance specifications and quality assurance procedures for their monitors. The Administrator may request further information and shall approve appropriate test methods and procedures.

(h) An owner or operator of a sterilization facility seeking to demonstrate compliance with the requirements of Sec. 63.363 or Sec. 63.364, with a monitoring device or procedure other than a gas chromatograph or a flame ionization analyzer, shall provide to the Administrator information describing the operation of the monitoring device or procedure and the parameter(s) that would demonstrate continuous compliance with each operating limit. The Administrator may request further information and will specify appropriate test methods and procedures.

III. MONITORING REQUIREMENTS.

 # 006 [25 Pa. Code §127.12b]
Plan approval terms and conditions.

a) Temperature sensing and recording devices shall be installed to show that the inlet temperature to the catalyst bed meets or exceeds the minimum inlet temperature for effective oxidation based on manufacturer specifications.

b) The company shall ensure that the control devices shall be equipped with the applicable monitoring equipment and the monitoring equipment shall be installed, calibrated, operated, and maintained according to the vendor's specifications at all times the control device is in use.

c) Prior to the performance test, the inlet temperature to the catalyst bed shall be continuously monitored and operated at or above the minimum inlet temperature to the combustion bed per manufacturer specifications. After completion of the initial performance test, the temperature to the catalyst bed shall be continuously monitored and operated at or above the minimum inlet temperature to the oxidation catalyst, achieved during the performance test during which compliance was demonstrated.

 # 007 [40 CFR Part 63 NESHAPS for Source Categories §40 CFR 63.363]
Subpart O -- Ethylene Oxide Emissions Standards for Sterilization Facilities
Compliance and performance provisions.

(a) (1) The owner or operator of a source subject to emissions standards in Sec. 63.362 shall conduct an initial performance test using the procedures listed in Sec. 63.7 according to the applicability in Table 1 of Sec. 63.360, the procedures listed in this section, and the test methods listed in Sec. 63.365.

(2) The owner or operator of all sources subject to these emissions standards shall complete the performance test within 180 days after the compliance date for the specific source as determined in Sec. 63.360(g).

(b) The procedures in paragraphs (b)(1) through (3) of this section shall be used to determine initial compliance with the emission limits under Sec. 63.362(c), the sterilization chamber vent standard and to establish operating limits for the control devices:

(1) The owner or operator shall determine the efficiency of control devices used to comply with Sec. 63.362(c) using the test methods and procedures in Sec. 63.365(b).

(2) For facilities with acid-water scrubbers, the owner or operator shall establish as an operating limit either:

(i) The maximum ethylene glycol concentration using the procedures described in Sec. 63.365(e)(1); or

(ii) The maximum liquor tank level using the procedures described in Sec. 63.365(e)(2).

(3) For facilities with catalytic oxidizers or thermal oxidizers, the operating limit consists of the recommended minimum oxidization temperature provided by the oxidation unit manufacturer for an operating limit.

(4) Facilities with catalytic oxidizer shall comply with one of the following work practices:

(i) Once per year after the initial compliance test, conduct a performance test during routine operations, i.e., with product in the chamber using the procedures described in Sec. 63.365(b) or (d) as appropriate. If the percent efficiency is less than 99 percent, restore the catalyst as soon as practicable but no later than 180 days after conducting the

SECTION E. Source Group Plan Approval Restrictions.

performance test; or

(ii) Once per year after the initial compliance test, analyze ethylene oxide concentration data from Sec. 63.364(e) or a continuous emission monitoring system (CEMS) and restore the catalyst as soon as practicable but no later than 180 days after data analysis; or

(iii) Every 5 years, beginning 5 years after the initial compliance test (or by December 6, 2002, whichever is later), replace the catalyst bed with new catalyst material.

(c) The procedures in paragraphs (c)(1) through (3) of this section shall be used to determine initial compliance with the emission limits under Sec. 63.362(d), the aeration room vent standard:

(1) The owner or operator shall comply with either paragraph (b)(2) or (3) of this section.

(2) Determine the concentration of ethylene oxide emitted from the aeration room into the atmosphere (after any control device used to comply with Sec. 63.362(d)) using the methods in Sec. 63.365(c)(1); or

(3) Determine the efficiency of the control device used to comply with Sec. 63.362(d) using the test methods and procedures in Sec. 63.365(d)(2).

(d) [Reserved]

(e) For facilities complying with the emissions limits under Sec. 63.362 with a control technology other than acid-water scrubbers or catalytic or thermal oxidizers, the owner or operator of the facility shall provide to the Administrator or delegated authority information describing the design and operation of the air pollution control system, including recommendations for the operating parameters to be monitored to demonstrate continuous compliance. Based on this information, the Administrator will determine the operating parameter(s) to be measured during the performance test. During the performance test required in paragraph (a) of this section, using the methods approved in Sec. 63.365(g), the owner or operator shall determine the site-specific operating limit(s)for the operating parameters approved by the Administrator.

(f) A facility must demonstrate continuous compliance with each operating limit and work practice standard required under this section, except during periods of startup, shutdown, and malfunction, according to the methods specified in Sec. 63.364.

 # 008 [40 CFR Part 63 NESHAPS for Source Categories §40 CFR 63.364]
Subpart O -- Ethylene Oxide Emissions Standards for Sterilization Facilities
Monitoring requirements.

(a)(1) The owner or operator of a source subject to emissions standards in Sec. 63.362 shall comply with the monitoring requirements in Sec. 63.8 of subpart A of this part, according to the applicability in Table 1 of Sec. 63.360, and in this section.

(2) Each owner or operator of an ethylene oxide sterilization facility subject to these emissions standards shall monitor the parameters specified in this section. All monitoring equipment shall be installed such that representative measurements of emissions or process parameters from the source are obtained. For monitoring equipment purchased from a vendor, verification of the operational status of the monitoring equipment shall include completion of the manufacturer's written specifications or recommendations for installation, operation, and calibration of the system.

(b) For sterilization facilities complying with Sec. 63.363 (b) or (d) through the use of an acid-water scrubber, the owner or operator shall either:

(1) Sample the scrubber liquor and analyze and record once per week the ethylene glycol concentration of the scrubber liquor using the test methods and procedures in Sec. 63.365(e)(1). Monitoring is required during a week only if the scrubber unit has been operated; or

(2) Measure and record once per week the level of the scrubber liquor in the recirculation tank. The owner or operator shall install, maintain, and use a liquid level indicator to measure the scrubber liquor tank level (i.e., a marker on the tank wall, a dipstick, a magnetic indicator, etc.). Monitoring is required during a week only if the scrubber unit has been operated.

SECTION E. Source Group Plan Approval Restrictions.

(c) For sterilization facilities complying with Sec. 63.363(b) or (c) through the use of catalytic oxidation or thermal oxidation, the owner or operator shall either comply with Sec. 63.364(e) or continuously monitor and record the oxidation temperature at the outlet to the catalyst bed or at the exhaust point from the thermal combustion chamber using the temperature monitor described in paragraph (c)(4) of this section. Monitoring is required only when the oxidation unit is operated. From 15-minute or shorter period temperature values, a data acquisition system for the temperature monitor shall compute and record a daily average oxidation temperature. Strip chart data shall be converted to record a daily average oxidation temperature each day any instantaneous temperature recording falls below the minimum temperature.

(1) [Reserved]

(2) [Reserved]

(3) [Reserved]

(4) The owner or operator shall install, calibrate, operate, and maintain a temperature monitor accurate to within <plus-minus>5.6 deg.C (<plus-minus>10 deg.F) to measure the oxidation temperature. The owner or operator shall verify the accuracy of the temperature monitor twice each calendar year with a reference temperature monitor (traceable to National Institute of Standards and Technology (NIST) standards or an independent temperature measurement device dedicated for this purpose). During accuracy checking, the probe of the reference device shall be at the same location as that of the temperature monitor being tested. As an alterative, the accuracy temperature monitor may be verified in a calibrated oven (traceable to NIST standards).

(d) For sterilization facilities complying with Sec. 63.363(b) or (c) through the use of a control device other than acid-water scrubbers or catalytic or thermal oxidizers, the owner or operator shall monitor the parameters as approved by the Administrator using the methods and procedures in Sec. 63.365(g).

(e) Measure and record once per hour the ethylene oxide concentration at the outlet to the atmosphere after any control device according to the procedures specified in Sec. 63.365(c)(1). The owner or operator shall compute and record a 24-hour average daily. The owner or operator will install, calibrate, operate, and maintain a monitor consistent with the requirements of performance specification (PS) 8 or 9 in 40 CFR part 60, appendix B, to measure ethylene oxide. The daily calibration requirements of section 7.2 of PS 9 or section 2.3 of PS 8 are required only on days when ethylene oxide emissions are vented to the control device.

IV. RECORDKEEPING REQUIREMENTS.

 # 009 [25 Pa. Code §127.12b]
Plan approval terms and conditions.

Pursuant to 25 Pa. Code § 135.5 (relating to recordkeeping), the owner or operator shall maintain and make available, upon request by the Department, such records as may be necessary to emonstrate compliance with 25 Pa. Code § 135.3 (relating to reporting). These records may include records of production, fuel usage, maintenance of production or pollution control equipment or other information determined by the Department to be necessary for identification and quantification of potential and actual air contaminant emissions. The records shall be retained for a minimum of five (5) years and shall be made available to the Department upon request.

 # 010 [25 Pa. Code §127.12b]
Plan approval terms and conditions.

The permittee shall maintain records which demonstrate compliance with the limit set in condition above and may be used by the Department for enforcement purposes. The records shall be updated on a monthly basis, shall be kept on site, and shall be provided to the Department personnel upon request.

 # 011 [25 Pa. Code §127.12b]
Plan approval terms and conditions.

Catalyst inlet temperature shall be recorded continuously whenever the unit is in operation. The temperature at the inlet to the catalyst bed shall be monitored and maintained to show that the unit is operating at or above the minimum inlet temperature to the oxidation catalyst achieved during the performance test in which compliance with the EtO destruction efficiency requirement is demonstrated. The recording charts shall be made available to the Department personnel upon request. These records shall be maintained for a period of time not less than five years.

SECTION E. Source Group Plan Approval Restrictions.

 # 012 [40 CFR Part 63 NESHAPS for Source Categories §40 CFR 63.367]
Subpart O -- Ethylene Oxide Emissions Standards for Sterilization Facilities
Recordkeeping requirements.

(a) The owner or operator of a source subject to Sec. 63.362 shall comply with the recordkeeping requirements in Sec. 63.10(b) and (c), according to the applicability in Table 1 of Sec. 63.360, and in this section. All records required to be maintained by this subpart or a subpart referenced by this subpart shall be maintained in such a manner that they can be readily accessed and are suitable for inspection. The most recent 2 years of records shall be retained onsite or shall be accessible to an inspector while onsite. The records of the preceding 3 years, where required, may be retained offsite. Records may be maintained in hard copy or computer-readable form including, but not limited to, on paper, microfilm, computer, computer disk, magnetic tape, or microfiche.

(b) The owners or operators of a source using 1 to 10 tons not subject to Sec. 63.362 shall maintain records of ethylene oxide use on a 12-month rolling average basis (until the source changes its operations to become a source subject to Sec. 63.362).

(c) The owners or operators of a source using less than 1 ton shall maintain records of ethylene oxide use on a 12-month rolling average basis (until the source changes its operations to become a source subject to Sec. 63.362).

(d) The owners or operators complying with Sec. 63.363(b) (4) shall maintain records of the compliance test, data analysis, and if catalyst is replaced, proof of replacement.

V. REPORTING REQUIREMENTS.

 # 013 [40 CFR Part 63 NESHAPS for Source Categories §40 CFR 63.366]
Subpart O -- Ethylene Oxide Emissions Standards for Sterilization Facilities
Reporting requirements.

(a) The owner or operator of a source subject to the emissions standards in Sec. 63.362 shall fulfill all reporting requirements in Secs. 63.10(a), (d), (e), and (f) of subpart A, according to the applicability in Table 1 of Sec. 63.360. These reports will be made to the Administrator at the appropriate address identified in Sec. 63.13 of subpart A of this part.

(1) Reports required by subpart A and this section may be sent by U.S. mail, fax, or by another courier.

(i) Submittals sent by U.S. mail shall be postmarked on or before the specified date.

(ii) Submittals sent by other methods shall be received by the Administrator on or before the specified date.

(2) If acceptable to both the Administrator and the owner or operator of a source, reports may be submitted on electronic media.

(3) Content and submittal dates for deviations and monitoring system performance reports. All deviations and monitoring system performance reports and all summary reports, if required per Sec. 63.10(e)(3)(vii) and (viii), shall be delivered or postmarked within 30 days following the end of each calendar half or quarter as appropriate (see Sec. 63.10(e)(3)(i) through (iv) for applicability). Written reports of deviations from an operating limit shall include all information required in Sec. 63.10(c)(5) through (13), as applicable in Table 1 of Sec. 63.360, and information from any calibration tests in which the monitoring equipment is not in compliance with PS 9 or the method used for temperature calibration. The written report shall also include the name, title, and signature of the responsible official who is certifying the accuracy of the report. When no deviations have occurred or monitoring equipment has not been inoperative, repaired, or adjusted, such information shall be stated in the report.

(b) Construction and reconstruction. The owner or operator of each source using 10 tons shall fulfill all requirements for construction or reconstruction of a source in Sec. 63.5 of subpart A of this part, according to the applicability in Table 1 of Sec. 63.360, and in this paragraph.

(1) Applicability.

(i) This paragraph and Sec. 63.5 of subpart A of this part implement the preconstruction review requirements of section 112(i)(1) for sources subject to these emissions standards. In addition, this paragraph and Sec. 63.5 of subpart A of this

part include other requirements for constructed and reconstructed sources that are or become subject to these emissions standards.

(ii) After the effective date, the requirements in this section and in Sec. 63.5 of subpart A of this part apply to owners or operators who construct a new source or reconstruct a source subject to these emissions standards after December 6, 1994. New or reconstructed sources subject to these emissions standards with an initial startup date before the effective date are not subject to the preconstruction review requirements specified in paragraphs (b) (2) and (3) of this section and Sec. 63.5(d) (3) and (4) and (e) of subpart A of this part.

(2) After the effective date, whether or not an approved permit program is effective in the State in which a source is (or would be) located, no person may construct a new source or reconstruct a source subject to these emissions standards, or reconstruct a source such that the source becomes a source subject to these emissions standards, without obtaining advance written approval from the Administrator in accordance with the procedures specified in paragraph (b)(3) of this section and Sec. 63.5(d) (3) and (4) and (e) of subpart A of this part.

(3) Application for approval of construction or reconstruction. The provisions of paragraph (b)(3) of this section and Sec. 63.5(d) (3) and (4) of subpart A of this part implement section 112(i)(1) of the Act.

(i) General application requirements.

(A) An owner or operator who is subject to the requirements of paragraph (b)(2) of this section shall submit to the Administrator an application for approval of the construction of a new source subject to these emissions standards, the reconstruction of a source subject to these emissions standards, or the reconstruction of a source such that the source becomes a source subject to these emissions standards. The application shall be submitted as soon as practicable before the construction or reconstruction is planned to commence (but not sooner than the effective date) if the construction or reconstruction commences after the effective date. The application shall be submitted as soon as practicable before the initial startup date but no later than 60 days after the effective date if the construction or reconstruction had commenced and the initial startup date had not occurred before the effective date. The application for approval of construction or reconstruction may be used to fulfill the initial notification requirements of paragraph (c)(1)(iii) of this section. The owner or operator may submit the application for approval well in advance of the date construction or reconstruction is planned to commence in order to ensure a timely review by the Administrator and that the planned commencement date will not be delayed.

(B) A separate application shall be submitted for each construction or reconstruction. Each application for approval of construction or reconstruction shall include at a minimum:

(1) The applicant's name and address.

(2) A notification of intention to construct a new source subject to these emissions standards or make any physical or operational change to a source subject to these emissions standards that may meet or has been determined to meet the criteria for a reconstruction, as defined in Sec. 63.2 of subpart A of this part.

(3) The address (i.e., physical location) or proposed address of the source.

(4) An identification of the relevant standard that is the basis of the application.

(5) The expected commencement date of the construction or reconstruction.

(6) The expected completion date of the construction or reconstruction.

(7) The anticipated date of (initial) startup of the source.

(8) The type and quantity of hazardous air pollutants emitted by the source, reported in units and averaging times and in accordance with the test methods specified in the standard, or if actual emissions data are not yet available, an estimate of the type and quantity of hazardous air pollutants expected to be emitted by the source reported in units and averaging times specified. The owner or operator may submit percent reduction information, if the standard is established in terms of percent reduction. However, operating parameters, such as flow rate, shall be included in the submission to the extent that