2570-FM-BWM0501a Rev. 5/2010

pennsylvania
DEPARTMENT OF ENVIRONMENTAL PROTECTION

COMMONWEALTH OF PENNSYLVANIA
DEPARTMENT OF ENVIRONMENTAL PROTECTION
BUREAU OF WASTE MANAGEMENT
STORAGE TANK DIVISION

UNDERGROUND STORAGE TANK FACILITY OPERATIONS INSPECTION

FOR DEP USE ONLY
Reviewer TS
Date 6/7/11
Entered by TS
Date 6/7/11

FACILITY INFORMATION
ID Number 39 - 37781
Name B BRAUN TED
Location 901 MARCON BLVD
Address ALLENTOWN PA 18103
Municipality HANOVER

Representative Present During Inspection
Name TROY PETROS
Phone 610 533 3917
☐ Owner ☐ Operator ☑ Employee ☐ None

CERTIFIED INSPECTOR
Name Rob Naulty
ID No. 4822
Phone 484-256-1857
E-mail rob.naulty@hafers.com

Date of First Site Visit (month/day/year) 5 · 31 · 2011

OWNER (must be a person)
Name STEVE STANCICK

OPERATOR (if different than owner)
Name

Financial Responsibility discussed with owner Yes ☑ No ☐
- Provided by USTIF. Owner must have deductibles available as provided in Subchapter H of the regulations.
- Required of all UST owners except state agencies.

Suspected or confirmed contamination observed Yes ☐ (notify proper region within 48 hours) No ☑

Improperly closed or unregistered tanks present Yes ☐ (provide comment) No ☑

Written instructions/notification procedures are available/posted Yes ☑ No ☐

Amended registration form required for (check all that apply):
☐ Added tanks
☐ Closed tanks
☐ Change in tank size
☐ Change in substance stored
☐ Change of operational status (in or out of service)
☐ Change of owner

RECEIVED DEP BUREAU OF WASTE MANAGEMENT 11 JUN -2 AM 10:28 STORAGE TANK PROGRAM

Inspection summary.
Indicate the compliance status of each item below using the following codes: N = Noncompliant C = Compliant

	Tank No. 001	Tank No.	Tank No.	Tank No.	Tank No.
Tank Construction and Corrosion Protection	C				
Piping Construction and Corrosion Protection	C				
Spill Prevention	C				
Overfill Prevention	C				
Registration Certificate Display	C				
Tank Release Detection	C				
Piping Release Detection	C				
Monthly sump checks	C				

I, the DEP Certified Inspector (IUM), have inspected the entire above referenced facility including examining manways, sumps, monitoring wells and dispensers. Based on my personal observation of the facility and documentation provided by the owner, I certify under penalty of law as provided in 18 PA C.S.A. Section 4904 (relating to unsworn falsification to authorities), that the information provided by me is true, accurate and complete to the best of my knowledge and belief.

Certified Inspector's Signature — Date 5 · 31 · 2011

As the representative of the owner or operator, I have reviewed the completed inspection report. I certify under penalty of law as provided in 18 PA C.S.A. Section 4904 (relating to unsworn falsification to authorities), that the information provided by me is true, accurate and complete to the best of my knowledge and belief.

Signature — Title: MECHANIC — Date 5/31/11

Regional Office – Norristown, Wilkes Barre, Harrisburg, Williamsport, Pittsburgh, or Meadville
Owner
DEP, Division of Storage Tanks, P.O. Box 8763, Harrisburg, PA 17105-8763
Inspector

2570-FM-BWM0501a Rev. 5/2010

UNDERGROUND STORAGE TANK FACILITY OPERATIONS INSPECTION

Facility Name B. BRAUN MED Date 5·31·2011 Facility ID 39-37781

I. TANK SYSTEM INFORMATION. For each tank, fill in the required information and codes from the following list. Where multiple codes are allowed and used for a specific tank component, describe the arrangement in the COMMENTS section. (See FOI form instructions for details.)

	Tank No. 001	Tank No.	Tank No.	Tank No.	Tank No.	DEP Use
1. Tank capacity (name plate gallons)	4,000					
2. Substance currently stored	H2SUB					
3. Installation date (mm/yyyy)	3·1999					
4. This drone tank is manifolded to tank number	—					
5. Product level, in inches, at time of inspection	39.6					
6. Total secondary containment on this tank system	N					(18)
7. Tank construction and corrosion protection	G					(1)
8. Main piping construction and corrosion protection	G-99					(2)
9a. Number of tank top sumps ‡	0					
9b. Number of tank top sumps tested tight ‡	—					(21)
9c. Spill containment tested tight	N					(21)
10a. Number of transition sumps	0					
10b. Number of transition sumps tested tight	—					(21)
11a. Number of connected dispensers	0					
11b. Number of connected dispensers with pans	0					
11c. Number of dispenser pans tested tight	—					(22)
12a. Piping flexible joints/connectors construction at tank	X					(PFLX)
12b. Piping flexible joints/connectors construction at dispenser	X					(PFLX)
13. Pump (product dispensing) system	A D					(4)
14. Spill protection	Y					(6)
15. Overfill type	E A					(7)
16. Current registration certificate display	Y					(8)
17. Stage I vapor recovery	N					(19)
18. Stage II vapor recovery	N					(20)
Evaluate the tank system release detection methods carefully before filling in the following rows.						
19. Tank release detection	H					(12)
20. Piping small release detection (0.2 gph monthly or 0.1 gph annually)	I					(5)
21. Pressure (line 13 is C or D) piping line leak detector (LLD function)	H					(5)
22. LLD function includes a positive turbine pump shutoff	N					(23)

‡ at tank penetrations that have pipe that routinely contains or conveys product.

Site drawing / manifold schematic (not master-drone system):

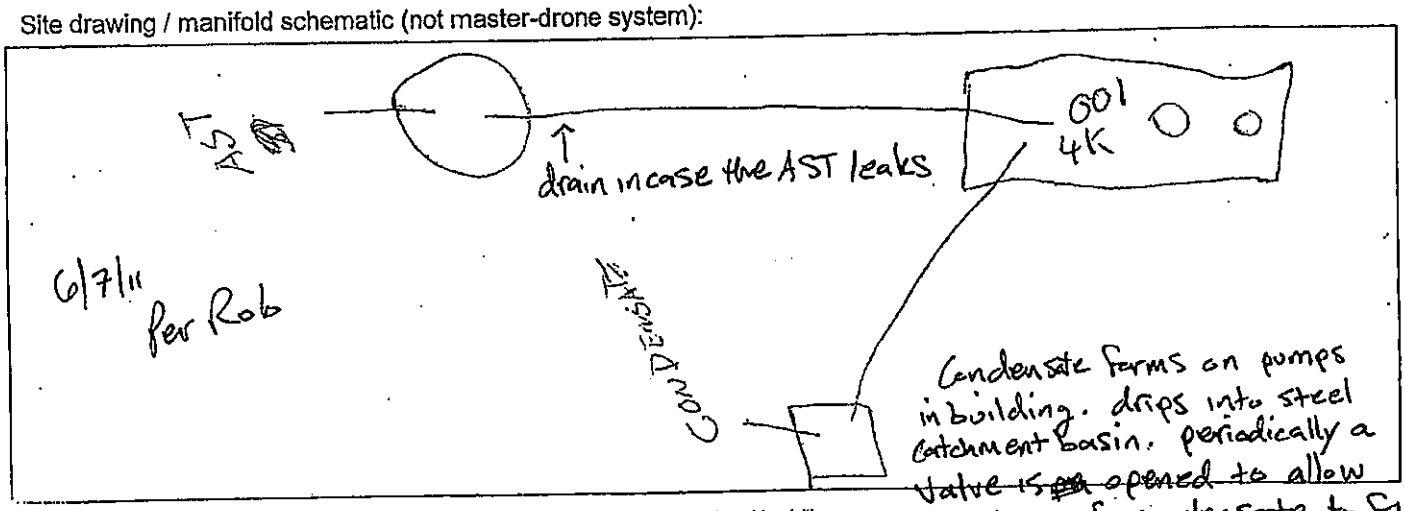

Original: Regional Office – Norristown, Wilkes Barre, Harrisburg, Williamsport, Pittsburgh, or Meadville
Copy: Owner
Copy: DEP, Division of Storage Tanks, P.O. Box 8763, Harrisburg, PA 17105-8763
Copy: Inspector

Tank System Component Codes

6. Total secondary containment
- Y Yes
- N No

7. Tank construction
- A Single-wall steel, unprotected
- B Single-wall, galvanic anodes
- C Impressed current protection
- D Double-wall steel, unprotected
- E Single-wall fiberglass (FRP)
- F Double-wall fiberglass (FRP)
- G Steel with plastic or fiberglass jacket (includes double-wall Act 100)
- H Steel with FRP coating (Act 100 or equivalent)
- I Steel with lined interior
- J Concrete
- N Unknown
- O Double-wall, steel primary, galvanic anodes
- P Cathodically protected and lined
- 99 Other (must provide written comment)

8. Main piping construction
- A Bare steel (including only wrapped or coated)
- B Cathodically protected, metallic
- C Copper, unprotected
- D Fiberglass or rigid non-metallic
- E Single-wall, flexible non-metallic
- F Unknown
- G No dispensing piping (most used oil tanks)
- I Double-wall, metallic primary
- J Double-wall rigid (FRP) primary
- K Double-wall flexible primary
- 99 Other (must provide written comment)

9c. Spill containment tested tight
- Y Yes
- N No

12. Piping flexible joints/connectors
- A Unprotected metallic component(s) (including only wrapped or coated)
- B Cathodically protected, metallic
- C Flexible coupling with protected metallic ends
- F Unknown
- I Completely inside a containment sump, secondary pipe or liner
- M Completely jacketed with sealed boot
- N NO jacket, not in contact with the ground
- X None
- 99 Other (must provide written comment)

13. Pump (delivery) system
- A Suction, check valve at pump or siphon bar only
- B Suction, check valve at tank
- C Pressure
- D Gravity flow to dispenser/pump
- E None

14. Spill protection
- Y Spill containment
- E Filled in less than 25 gallon increments
- N None present or needs repair

15. Overfill type (if code S or B, ensure compatible with delivery method)
- S Drop tube shut off device
- A Overfill alarm (provide description and location in comment section)
- B Ball float valve
- E Filled in less than 25 gallon increments
- N None present or not usable

16. Current registration certificate display
- Y Properly displayed
- N Not displayed

17. Stage I vapor recovery
- A Coaxial
- B 2 port
- N Not complete or none

18. Stage II vapor recovery
- A Complete balance system
- B Complete assist system
- C UG piping only; not complete
- N None of the above

19. Tank release detection
- C Manual Tank Gauging (36 Hour) and Tank Tightness Testing (TTT) every 5 years
- D Statistical Inventory Reconciliation (SIR)
- E Certified Automatic Tank Gauge (0.2 gph Leak Test)
- F Manual Tank Gauging (36 Hour), no TTT
- G44 Manual Tank Gauging, 44 Hours
- G58 Manual Tank Gauging, 58 Hours
- H Interstitial Monitoring (2 Walls)
- J Groundwater Monitoring
- K Vapor Monitoring
- N None
- O Exempt (must provide written comment)

20. Piping small release detection (0.2/0.1 gph)
- B Annual Line Tightness Test (pressure)
- C Line Tightness Test - 3 years (suction)
- D Interstitial Monitoring (monthly – includes visual checking)
- E Groundwater Monitoring
- F Vapor Monitoring
- H None
- I Exempt (must provide written comment)
- J Statistical Inventory Reconciliation (SIR)
- K Electronic Line Leak Detector (0.1 or 0.2 gph test)

21. Piping line leak detection (3 gph within 1 hr.)
- A Mechanical Line Leak Detector (incl. test)
- H None
- K Electronic Line Leak Detector (3 gph test)
- L Continuous Interstitial Monitoring with alarm or pump shut off

22. Positive Turbine pump shutoff
- Y Yes – present and tested
- P Present
- N Not present

Distribution: Regional Office – Norristown, Wilkes Barre, Harrisburg, Williamsport, Pittsburgh, or Meadville
Owner
DEP, Division of Storage Tanks, P.O. Box 8763, Harrisburg, PA 17105-8763
Inspector

UNDERGROUND STORAGE TANK FACILITY OPERATIONS INSPECTION

Facility Name B BRAUN MED Date 5·31·11 Facility ID 39-37781

II. Release Detection Reference

- Records may be located at the facility or a readily available alternate site.
- The records include all of the information listed below for chosen release detection methods.
- The inspector has actually seen the records.
- A test with an inconclusive result or failure is an indication of a (suspected) product release.

Tank System	Tank System	Tank System	Tank System	Tank System
001				

Instructions: *Check the box to indicate that a criterion has been met.* *Circle the box to indicate that a criterion has not been met.* *Circle with "N/A" when a criterion is not applicable (provide comment).*

Automatic Tank Gauging: (Tank only – code E)

ATG manufacturer: _____ ATG model: _____

Does the automatic tank gauge perform continuous in-tank release detection? ☐ Yes, ☐ No

- valid monthly leak test conducted and documented
- manufacturer's certification of ability to detect 0.2 gph release is available
- probes and gauge software certified for manifolded tank systems
  - when not specifically certified, the siphon must be broken to properly test
- maintenance records, for the last year, including calibration, preventative and repair
- equipment is operational

Manual Tank Gauging: (Tank only – code C, F, G44 or G58)

- tank capacity is 2,000 gallons or less
- tank installed before 11/10/2007
- performed weekly
- 1/8th inch accuracy stick readings
- average 2 stick readings before and after test
- test length appropriate for each tank
  - 36 hours minimum
  - 44 hours, 551-1000 gallons, 64" diameter
  - 58 hours, 551-1000 gallons, 48" diameter
- variation is within standard (both weekly and monthly)

Precision Tightness Test (TTT): (Tank only – code C)

method used (after 10/11/1994): _____

date of last test: _____, result: _____

- complete documentation of tightness test available
- performed by UTT certified installer (after 9/28/1996)
- manufacturer's certification of ability to detect 0.1 gph release is available

Interstitial Monitoring: (Tank code H; describe monitoring equipment in comments)

- ☑ interstitial area monitored monthly (required for tanks installed after 11/20/2007)
- ☑ interstitial sensors properly placed (per manufacturer's instructions)
- ☑ monitoring wells (secondary barrier) or ports are clearly marked and secured
- ☑ maintenance records, for the last year, including preventative and repair
- ☑ equipment manufacturer's performance claims are available
- ☑ secondary barrier is compatible with and impermeable to the stored substance

Statistical Inventory Reconciliation: (Tank code D and/or Piping code J)

test vendor: _____ version: _____

- manufacturer's certification of ability to detect 0.2 gph release is available
- data is collected according to the test vendor's instructions
- analysis completed monthly and valid results supplied to owner/operator within 20 days
  - valid reports include calculated leak rate, minimum detectible leak rate, leak threshold, probability of detection and probability of false alarm
- suspected releases properly investigated within 7 days of inconclusive or failed report to confirm or deny the occurrence of a release

Original: Regional Office – Norristown, Wilkes Barre, Harrisburg, Williamsport, Pittsburgh, or Meadville
Copy: Owner
Copy: DEP, Division of Storage Tanks, P.O. Box 8763, Harrisburg, PA 17105-8763
Copy: Inspector

UNDERGROUND STORAGE TANK FACILITY OPERATIONS INSPECTION

Facility Name B BRAUN MED Date 6/4/08? Facility ID 39 - 37281

II. RELEASE DETECTION REFERENCE (continued)

Tank System	Tank System	Tank System	Tank System	Tank System
001				

Instructions: *Check the box to indicate that a criterion has been met.*
Circle the box to indicate that a criterion has not been met.
Circle with "N/A" when a criterion is not applicable (provide comment).

Groundwater or Vapor Monitoring: **(Tank code J or K and/or Piping code E or F;** describe well locations and monitoring equipment in comments)

- ☐ ☐ ☐ ☐ ☐ wells are located according to site evaluation; attach page with evaluator authentication to the inspection report
- ☐ ☐ ☐ ☐ ☐ wells are properly installed in accordance with site evaluation and regulations
- ☐ ☐ ☐ ☐ ☐ wells are monitored and results recorded monthly in accordance with site evaluation
- ☐ ☐ ☐ ☐ ☐ monitoring wells are marked and secured
- ☐ ☐ ☐ ☐ ☐ fill material is sufficiently porous to allow expeditious detection at the monitoring wells
- ☐ ☐ ☐ ☐ ☐ substance stored meets regulatory requirements for type of monitoring
- ☐ ☐ ☐ ☐ ☐ equipment manufacturer's performance claims are available
- ☐ ☐ ☐ ☐ ☐ equipment maintenance records, for the last year, including calibration, preventative and repair

Groundwater monitoring:

- ☐ ☐ ☐ ☐ ☐ monitoring devices can detect 1/8 inch of product or less on water
- ☐ ☐ ☐ ☐ ☐ groundwater is within 20 feet of surface grade
- ☐ ☐ ☐ ☐ ☐ wells are sealed from ground surface to the top of the filter pack
- ☐ ☐ ☐ ☐ ☐ casing is properly slotted: allows entry of product during all groundwater conditions

Vapor Monitoring:

- ☐ ☐ ☐ ☐ ☐ the monitoring device is not rendered inoperative by moisture
- ☐ ☐ ☐ ☐ ☐ background contamination will not interfere with vapor monitoring
- ☐ ☐ ☐ ☐ ☐ vapor monitors will detect increases in concentrations of stored substance

Interstitial Monitoring: **(Piping code D and/or L;** describe monitoring equipment in comments)

- ☐ ☐ ☐ ☐ ☐ interstitial area monitored monthly (required for all totally-contained pressurized piping systems)
- ☐ ☐ ☐ ☐ ☐ secondary enters sump and allows a release to be detected
- ☐ ☐ ☐ ☐ ☐ interstitial sensors properly placed (per manufacturer's instructions)
- ☐ ☐ ☐ ☐ ☐ monitoring wells or ports (when used) are clearly marked and secured
- ☐ ☐ ☐ ☐ ☐ maintenance records, for the last year, including preventative and repair
- ☐ ☐ ☐ ☐ ☐ equipment manufacturer's performance claims are available
- ☐ ☐ ☐ ☐ ☐ secondary barrier (pipe) is compatible with and impermeable to the stored substance
- ☐ ☐ ☐ ☐ ☐ (Code L only) continuous monitoring used as line leak detector (gravity or pressurized piping) – capable of detecting 3.0 gph release within 1 hour
- ☐ ☐ ☐ ☐ ☐ (Code L only) system tested for operability within the last year
- ☐ ☐ ☐ ☐ ☐ (Code L only) monthly "sensor status" (or equivalent) records available

Sumps Checked Monthly

- ☐ ☐ ☐ ☐ ☐ monthly sump checks for the last 12 months documented
- ☐ ☐ ☐ ☐ ☐ tank top sumps dry and clean
- ☐ ☐ ☐ ☐ ☐ transition sumps dry and clean
- ☐ ☐ ☐ ☐ ☐ dispenser pans/sumps dry and clean

Exempt Suction System: **(SUCTION piping only – code I)**
NOTE: No further release detection required on piping meeting all these criteria.

- N/A ☐ ☐ ☐ ☐ ☐ the tank top is lower than the suction pump inlet
- ☑ ☐ ☐ ☐ ☐ the below grade piping slopes uniformly back to the tank
- ☐ ☐ ☐ ☐ ☐ there is no more than one check valve in the piping
- N/A ☐ ☐ ☐ ☐ ☐ the check valve is located close to or inside the suction pump
- ☐ ☐ ☐ ☐ ☐ compliance with above specifications can be readily determined; describe in comments

Cc: Regional Office – Norristown, Wilkes Barre, Harrisburg, Williamsport, Pittsburgh, or Meadville
Owner
DEP, Division of Storage Tanks, P.O. Box 8763, Harrisburg, PA 17105-8763
Inspector

UNDERGROUND STORAGE TANK FACILITY OPERATIONS INSPECTION

Facility Name B. BRAUN MED Date 5.31.11 Facility ID 39 - 37781

II. RELEASE DETECTION REFERENCE (continued)

Tank System	Tank System	Tank System	Tank System	Tank System
001				

Instructions: *Check the box to indicate that a criterion has been met. Circle the box to indicate that a criterion has not been met. Circle with "N/A" when a criterion is not applicable (provide comment).*

Piping Tightness (Line) Testing: (Piping only – code B or C)

test vendor: _____ version: _____

date of last test: _____, result: _____

☐ ☐ ☐ ☐ ☐ test certification of ability to detect 0.1 gph release at 1.5 times operating pressure is available

☐ ☐ ☐ ☐ ☐ performed by UTT certified installer (after 11/10/2008)

☐ ☐ ☐ ☐ ☐ test conducted at proper frequency
- conducted annually for **pressurized** piping without monthly monitoring
- conducted every 3 years for **suction** piping not meeting code I requirements

☐ ☐ ☐ ☐ ☐ if test device permanently installed, maintenance records, for the last year, including calibration, preventative and repair

Mechanical Line Leak Detector: (PRESSURIZED Piping only – code A)

manufacturer: _____ model: _____

date last tested: _____, result: _____

☐ ☐ ☐ ☐ ☐ certification of ability to detect a release of 3 gph at 10 psig within 1 hour is available

☐ ☐ ☐ ☐ ☐ operational test of leak detector according to manufacturer's instructions in last 12 months

☐ ☐ ☐ ☐ ☐ maintenance records, in addition to the annual test, for last year, including calibration, preventative and repair

Electronic Line Leak Detector: (PRESSURIZED Piping only – code K)

manufacturer: _____ model: _____

date of last 3gph test: _____ result: _____

☐ ☐ ☐ ☐ ☐ self checking or system tested for operability within the last year

☐ ☐ ☐ ☐ ☐ certification of ability to detect a release of 3 gph at 10 psig within 1 hour is available

☐ ☐ ☐ ☐ ☐ maintenance records, in addition to annual test, for last year, including calibration, preventative and repair

☐ ☐ ☐ ☐ ☐ continuously monitors piping

Is the electronic leak detector performing the "monthly" monitoring function? ☐ Yes, ☐ No If yes:

date of last 0.2gph test: _____, result: _____

☐ ☐ ☐ ☐ ☐ third-party certification of ability to detect 0.2 gph release is available

☐ ☐ ☐ ☐ ☐ documentation of monthly test available for last year

Is the electronic leak detector performing the "annual" monitoring function? ☐ Yes, ☐ No If yes:

date of last 0.1gph test: _____, result: _____

☐ ☐ ☐ ☐ ☐ third-party certification of ability to detect 0.1 gph release is available

IUM Release Detection Record Review: (All release detection codes)

- An empty tank (less than 1" of product/sludge) or a tank supplying an emergency generator only is not required to perform release detection. Indicate date emptied or that it is an emergency generator tank in comments.
- Recently installed tank systems must begin performing release detection immediately after receiving product. Indicate date of first product receipt in comments.

☑ ☐ ☐ ☐ ☐ tank release detection records for the last 12 months the system contained product are available

☑ ☐ ☐ ☐ ☐ tank release detection records are valid and passing

N/A ☐ ☐ ☐ ☐ ☐ piping release detection records for the last 12 months the system contained product are available

☐ ☐ ☐ ☐ ☐ piping release detection records are valid and passing

Original: Regional Office – Norristown, Wilkes Barre, Harrisburg, Williamsport, Pittsburgh, or Meadville
Copy: Owner
Copy: DEP, Division of Storage Tanks, P.O. Box 8763, Harrisburg, PA 17105-8763
Copy: Inspector

2570-FM-BWM0501a Rev. 5/2010

UNDERGROUND STORAGE TANK FACILITY OPERATIONS INSPECTION

Facility Name B. BRAUN MED Date 5/31/11 Facility ID 39 - 37781

III. CORROSION PROTECTION COMPLIANCE CRITERIA

Tank System	Tank System	Tank System	Tank System	Tank System
001				

Instructions: *Check the box to indicate that a criterion has been met.* *Circle the box to indicate that a criterion has not been met.* *Circle with "N/A" when a criterion is not applicable (provide comment).*

Lined Tanks: (Tank only – code I)

☐ ☐ ☐ ☐ ☐ tank inspected and lined according to national standard
date lined: _____

☐ ☐ ☐ ☐ ☐ tank initially inspected 10 years after lining and every 5 years thereafter
date(s) inspected: _____

Galvanic and Impressed Cathodic Protection: (Tank code B, C, O or P and/or Piping)

☐ ☐ ☐ ☐ ☐ **tank** structure to soil potential greater than 0.85 volts, or
☐ ☐ ☐ ☐ ☐ meets other nationally recognized protection standard: specify: _____
___ ___ ___ ___ ___ potential on **tank** current monitoring (date) _____
___ ___ ___ ___ ___ potential on **tank** previously monitored (date) _____

☐ ☐ ☐ ☐ ☐ **pipe/flex** structure to soil potential greater than 0.85 volts, or
☐ ☐ ☐ ☐ ☐ meets other nationally recognized protection standard: specify: _____
___ ___ ___ ___ ___ potential on **pipe/flex** current monitoring (date) _____
___ ___ ___ ___ ___ potential on **pipe/flex** previously monitored (date) _____

Impressed Current Design and Rectifier Output: (Tank code C or P and/or Piping)

☐ ☐ ☐ ☐ ☐ system designed by a corrosion expert
☐ ☐ ☐ ☐ ☐ system is turned on and functioning within design limits
☐ ☐ ☐ ☐ ☐ documentation of last three amp (plus volt and runtime when meters available) readings, recorded at least once every 60 days:

most recent: volts: ____ amps: ____ runtime: ____ date: ____
60 days prior: volts: ____ amps: ____ runtime: ____ date: ____
120 days prior: volts: ____ amps: ____ runtime: ____ date: ____

If Cathodic Protection or supplemental anodes were added to an existing tank system, fill in the following (Information is Required for Compliance):

Date assessed: _____ Date installed: _____
Tank Shell Assessment Method: _____

IV. Operator Training

☐ list of trained operators designates a class A operator; includes their training certification
☐ list of trained operators designates a class B operator; includes their training certification
☐ list of trained operators designates class C operator(s); date of initial training or last refresher is within the previous 12 months
☑ written instructions and notification procedures are readily available for class C operators at retail facilities; are posted in a location visible to dispenser operators at other facilities

DESCRIBE INFORMAL TRAINING PROVIDED FOR OWNER, CLASS A AND/OR CLASS B OPERATORS – see instructions.

TALKED TO TROY PETROS ABOUT OPERATOR TRAINING

Original: Regional Office – Norristown, Wilkes Barre, Harrisburg, Williamsport, Pittsburgh, or Meadville
Copy: Owner
Copy: DEP, Division of Storage Tanks, P.O. Box 8763, Harrisburg, PA 17105-8763
Copy: Inspector

UNDERGROUND STORAGE TANK FACILITY

OPERATIONS INSPECTION

Facility Name B Braun Med **Date** 5/31/2011 **Facility ID** 39 - 37781

☑ IUM checked for water in tank(s) and sump(s) – results below

V. COMMENTS INCLUDING ACTIONS TO BRING INTO COMPLIANCE (Attach additional sheets where necessary) See instructions

B Braun Medical is a 4,000 gallon Elutron jacketed double-wall tank that contains a water/ Ethylene Glycol mix. This tank is listed as T1 on the Veeder Root TLS 300C tank monitor. This new tank monitor was upgraded from the EBW Auto Stik Jr-4 unit around December 2010. Another change from the last inspection is a shed directly over the tank. There are cutouts in the floor to access the tank probes and spill bucket.

wood, prebuilt shed

Installed by Hafer

Section 8, The main piping at this site is schedule 40 PVC single wall pipe. There are 2 separate floor drains in where the product can simply flow back into the tank.

The exposed piping for the suction pump is a mix of steel and PVC. ← all piping associated w/ pump is aboveground.

Section 12, There is no access to the tank top gravity piping connections.

Since the last inspection, the operator permanently mounted a suction pump to unload the used water/ glycol mix. All the piping for this unit is visible for inspection.

Section 13, The pump system has always been "D" for gravity fed systems. With the ridged mounted pumping system for unloading the tank, I marked this section "A" also.

Section 14, There is spill containment on top of the tank, but it has a 2" suction tube permanently through the riser pipe.

Section 15, The tank is filled in less than 25 gallon increments. Also there is a tank monitor in the hall way to alert of an overfill. There are no outside deliveries to this tank to need an alarm near the tank.

Section 19, Tank release detection is met by monthly interstitial monitoring. All past 12 months records were available and passing.

Section 20, 21, Piping release detection is exempt due to being a gravity system, and a suction system with all the piping visible.

2670-FM-BWM0501a Rev. 11/2007

COMMONWEALTH OF PENNSYLVANIA
DEPARTMENT OF ENVIRONMENTAL PROTECTION
BUREAU OF WASTE MANAGEMENT
STORAGE TANK DIVISION

UNDERGROUND STORAGE TANK FACILITY OPERATIONS INSPECTION

FOR DEP USE ONLY
Reviewer TC
Date 8/22/08
Entered by
Date

FACILITY INFORMATION
ID Number 39 - 37781
Name B Braun Med
Address 901 Marcon Blvd.
Allentown, PA 18103

Representative Present During Inspection
Name Steve Stancick
Phone 610-266-0500
☐ Owner ☐ Operator ☒ Employee ☐ None

CERTIFIED INSPECTOR
Name Scott Hafer
ID No. 114
Phone 610-376-9738
E-mail scott.hafer@hafers.com

Date of First Site Visit (month/day/year)
6-4-2008

OPERATOR (if different than owner)
Name
Address

STORAGE TANK FACILITY
AUG - 7 2008
ID #
COUNTY: LEHIGH
FILE CODE: PIR

Financial Responsibility discussed with owner Yes ☑ No ☐
ξ Provided by USTIF. Owner must have deductibles available as provided in Subchapter H of the regulations.
ξ Required of all UST owners except state agencies.

Suspected or confirmed contamination observed Yes ☐ (notify proper region within 48 hours) No ☑

Improperly closed or unregistered tanks present Yes ☐ (provide comment) No ☑

Amended registration form required for (check all that apply):
☐ Added tanks
☐ Closed tanks
☐ Change in tank size
☐ Change in substance stored
☐ Change of operational status (in or out of service)
☐ Change of owner

Inspection summary.
Indicate the compliance status of each item below using the following codes: N = Noncompliant C = Compliant

	Tank No. 001	Tank No.	Tank No.	Tank No.	Tank No.
Tank Construction and Corrosion Protection	C				
Piping Construction and Corrosion Protection	C				
Spill Prevention	C				
Overfill Prevention	C				
Registration Certificate Display	C				
Tank Release Detection	C				
Piping Release Detection	C				

I, the DEP Certified Inspector (IUM), have inspected the entire above referenced facility including examining manways, sumps, monitoring wells and dispensers. Based on my personal observation of the facility and documentation provided by the owner, I certify under penalty of law as provided in 18 PA C.S.A. Section 4904 (relating to unsworn falsification to authorities), that the information provided by me is true, accurate and complete to the best of my knowledge and belief.

Scott L. Hafer (Pres. HPE, Ltd) 6-4-08
Certified Inspector's Signature Date

As the representative of the owner or operator, I have reviewed the completed inspection report. I certify under penalty of law as provided in 18 PA C.S.A. Section 4904 (relating to unsworn falsification to authorities), that the information provided by me is true, accurate and complete to the best of my knowledge and belief.

[signature] Sterilization Operations Manager 6/4/08
Signature representing B. Braun Medical Inc. Title Date

Original: Regional Office – Norristown, Wilkes Barre, Harrisburg, Williamsport, Pittsburgh, or Meadville
Copy: Owner
Copy: DEP, Division of Storage Tanks, P.O. Box 8763, Harrisburg, PA 17105-8763
Copy: Inspector

2570-FM-BWM0501a Rev. 11/2007

UNDERGROUND STORAGE TANK FACILITY OPERATIONS INSPECTION

Facility Name B Brown MED Date 6-4-08 Facility ID 39 - 37781

I. **TANK SYSTEM INFORMATION.** For each tank, write in the Tank Number at the top of the column, its capacity, substance stored, installation date, manifold condition ("—" if not a drone tank) and product level directly underneath. Fill in the remainder of the Tank System Information using the proper Tank System Component Code from the lists at the bottom of the page. Where multiple codes are allowed and used for a tank component, describe the arrangement in the COMMENTS section.

	Tank No. 001	Tank No.	Tank No.	Tank No.	Tank No.	DEP Use
1. Tank capacity (name plate gallons)	4000					
2. Substance currently stored	HSVP					
3. Installation date (mm/yyyy)	4-1999					
4. This drone tank is manifolded to tank number	N/A					
5. Product level, in inches, at time of inspection	34.2					
6. Total secondary containment on this tank system	N					(18)
7. Tank construction and corrosion protection	G					(1)
8. Main piping construction and corrosion protection	G G					(2)
9. Piping sumps tested tight	N					
10. Dispenser pans under each dispenser tested tight	N					
11a. Piping flexible joints/connectors construction at tank	X					(PFLX)
11b. Piping flexible joints/connectors construction at dispenser	X					(PFLX)
12. Pump (product dispensing) system	D					(4)
13. Spill protection	Y					(6)
14. Overfill type	A					(7)
15. Current registration certificate display	Y					(8)
16. Stage I vapor recovery	N					(19)
17. Stage II vapor recovery	N					(20)
Evaluate the tank system leak detection methods carefully before filling in the next 3 rows.						
18. Tank release detection	H					(12)
19. Piping small release detection (0.2 gph monthly or 0.1 gph annually)	I					(5)
20. Pressure (line 12 is C or D) piping line leak detector (LLD function)	H					(5)

Tank System Component Codes

6. Total secondary containment
- Y Yes
- (N) No

7. Tank construction
- A Single-wall steel, unprotected
- B Single-wall, galvanic anodes
- C Impressed current protection
- D Double-wall steel, unprotected
- E Single-wall fiberglass (FRP)
- F Double-wall fiberglass (FRP)
- (G) Steel with plastic or fiberglass jacket (includes double-wall Act 100) Plasteel
- H Steel with FRP coating (Act 100 or equivalent)
- I Steel with lined interior
- J Concrete
- N Unknown
- O Double-wall, steel primary, galvanic anodes
- P Cathodically protected and lined
- 99 Other (must provide written comment)

8. Main piping construction
- A Bare steel (including only wrapped or coated)
- B Cathodically protected, metallic
- C Copper, unprotected
- D Fiberglass or rigid non-metallic
- E Single-wall, flexible non-metallic
- F Unknown
- (G) No dispensing piping (most used oil tanks)
- I Double-wall, metallic primary
- J Double-wall rigid (FRP) primary
- K Double-wall flexible primary
- 99 Other (must provide written comment)

9. Piping sumps tested tight
- Y Yes – present and tested
- (N) No

10. Dispenser pans tested tight
- Y Yes – present and tested
- (N) No

11. Piping flexible joints/connectors
- A Unprotected metallic component(s) (including only wrapped or coated)
- B Cathodically protected, metallic
- C Flexible coupling with protected metallic ends
- F Unknown
- I Completely inside a containment sump, secondary pipe or liner
- M Completely jacketed with sealed boot
- N NO jacket, not in contact with the ground
- (X) None
- 99 Other (must provide written comment)

12. Pump (delivery) system
- A Suction, check valve at pump or siphon bar only
- B Suction, check valve at tank
- C Pressure
- (D) Gravity flow to dispenser/pump
- E None

13. Spill protection
- (Y) Spill containment
- E Filled in less than 25 gallon increments
- N None present or needs repair

14. Overfill type
- S Drop tube shut off device
- (A) Overfill alarm (provide description and location in comment section)
- B Ball float valve
- E Filled in less than 25 gallon increments
- N None present or not usable

15. Current registration certificate display
- (Y) Properly displayed
- N Not displayed

16. Stage I vapor recovery
- A Coaxial
- B 2 port
- (N) Not complete or none

17. Stage II vapor recovery
- A Complete balance system
- B Complete assist system
- C UG piping only; not complete
- (N) None of the above

18. Tank release detection
- A Inventory Control and Tank Tightness Testing every 5 years
- C Manual Tank Gauging (36 Hour) and Tank Tightness Testing (TTT) every 5 years
- D Statistical Inventory Reconciliation (SIR)
- E Automatic Tank Gauging (0.2 gph Leak Test)
- F Manual Tank Gauging (36 Hour), no TTT
- G Manual Tank Gauging (44 or 58 Hour)
- (H) Interstitial Monitoring (2 Walls)
- I Interstitial Monitoring (Liner)
- J Groundwater Monitoring
- K Vapor Monitoring
- N None
- O Exempt (must provide written comment)

19. Piping small release detection (0.2/0.1 gph)
- B Annual Line Tightness Test (pressure)
- C Line Tightness Test - 3 years (suction)
- D Interstitial Monitoring (monthly)
- E Groundwater Monitoring
- F Vapor Monitoring
- H None
- (I) Exempt (must provide written comment)
- J Statistical Inventory Reconciliation (SIR)
- K Electronic Line Leak Detector (0.1 or 0.2 gph test)

20. Piping line leak detection (3 gph within 1 hr.)
- A Mechanical Line Leak Detector (incl. test)
- (H) None
- K Electronic Line Leak Detector (3 gph test)
- L Continuous Interstitial Monitoring with alarm (old system) or pump shut off

UNDERGROUND STORAGE TANK FACILITY OPERATIONS INSPECTION

Facility Name B. Braun Medical Date 6-4-08 Facility ID 39 - 37781

II. Release Detection Reference

- ξ Records may be located at the facility or a readily available alternate site.
- ξ The records include all of the information listed below for chosen release detection methods.
- ξ The inspector has actually seen the records.
- ξ A test with an inconclusive result or failure is an indication of a (suspected) product release.

Tank System 001	Tank System ___	Tank System ___	Tank System ___	Tank System ___	
					Instructions: ***Check the box to indicate that a criterion has been met. Circle the box to indicate that a criterion has not been met. Circle with "N/A" when a criterion is not applicable (provide comment).***
Inventory Control: (Tank only – code A)					
N/A ☐	☐	☐	☐	☐	less than 10 years since tank installation or addition of corrosion protection to bare steel tank (Usable only until 12/22/2008, for systems installed before 11/10/2007.)
☐	☐	☐	☐	☐	stick (or ATG) capable of measuring to 1/8th inch
☐	☐	☐	☐	☐	stick (or ATG) readings and dispenser readings each operating day
☐	☐	☐	☐	☐	1/8th inch accuracy in product (stick) readings
☐	☐	☐	☐	☐	before/after delivery stick readings reconciled with delivery receipts
☐	☐	☐	☐	☐	deliveries made through a drop tube
☐	☐	☐	☐	☐	dispenser meter calibrated
☐	☐	☐	☐	☐	monthly check for water (1/8th inch accuracy)
☐	☐	☐	☐	☐	monthly reconciliation (1% of volume pumped plus 130 gallons) performed
Precision Tightness Test (TTT): (Tank only – code A or C)					
N/A ☐	☐	☐	☐	☐	complete documentation of tightness test available
☐	☐	☐	☐	☐	performed by UTT certified installer (after 9/28/96)
☐	☐	☐	☐	☐	manufacturer's certification of ability to detect 0.1 gph release is available
					date of last test: _____, result: _____
					method used (after 10/11/1994): _____
Automatic Tank Gauging: (Tank only – code E)					
N/A					Does the automatic tank gauge perform continuous in-tank release detection? ☐ Yes, ☒ No
☐	☐	☐	☐	☐	valid monthly leak test conducted and documented
					ATG manufacturer: EBW ATG model: AutoStik JR. 4
☐	☐	☐	☐	☐	manufacturer's certification of ability to detect 0.2 gph release is available
☐	☐	☐	☐	☐	probes and gauge software certified for manifolded tank systems
					⌘ when not specifically certified, the siphon must be broken to properly test
☐	☐	☐	☐	☐	maintenance records, for the last year, including calibration, preventative and repair
☐	☐	☐	☐	☐	equipment is operational
Manual Tank Gauging: (Tank only – code C, F or G)					
N/A ☐	☐	☐	☐	☐	tank capacity is 2,000 gallons or less
☐	☐	☐	☐	☐	performed weekly
☐	☐	☐	☐	☐	1/8th inch accuracy stick readings
☐	☐	☐	☐	☐	average 2 stick readings before and after test
☐	☐	☐	☐	☐	test length appropriate for each tank
					⌘ 36 hours minimum
					⌘ for tanks requiring tightness test (code C): tank has been installed less than 10 years or less than 10 years since first corrosion upgrade, and installed prior to 11/10/2007
					⌘ 44 hours, 551-1000 gallons, 64" diameter, no tightness test
					⌘ 58 hours, 551-1000 gallons, 48" diameter, no tightness test
☐	☐	☐	☐	☐	variation is within standard (both weekly and monthly)

UNDERGROUND STORAGE TANK FACILITY OPERATIONS INSPECTION

Facility Name B. Braun Medical Date 6-4-08 Facility ID 39 - 37781

II. RELEASE DETECTION REFERENCE (continued)

Instructions: ***Check the box to indicate that a criterion has been met. Circle the box to indicate that a criterion has not been met. Circle with "N/A" when a criterion is not applicable (provide comment).***

Tank System 001	Tank System	Tank System	Tank System	Tank System	
					Interstitial Monitoring: (Tank code H or I)
☑	☐	☐	☐	☐	interstitial area monitored monthly
☑	☐	☐	☐	☐	interstitial sensors properly placed (per manufacturer's instructions)
☑	☐	☐	☐	☐	monitoring wells (secondary barrier) or ports are clearly marked and secured
☑	☐	☐	☐	☐	maintenance records, for the last year, including preventative and repair
☑	☐	☐	☐	☐	equipment manufacturer's performance claims are available
☑	☐	☐	☐	☐	secondary barrier is compatible with and impermeable to the stored substance
					Statistical Inventory Reconciliation: (Tank code D and/or Piping code J)
N/A ☐	☐	☐	☐	☐	manufacturer's certification of ability to detect 0.2 gph release is available
☐	☐	☐	☐	☐	data is collected according to the test vendor's instructions
☐	☐	☐	☐	☐	analysis completed monthly and valid results supplied to owner/operator within 20 days ※ valid reports include calculated leak rate, minimum detectible leak rate, leak threshold, probability of detection and probability of false alarm
☐	☐	☐	☐	☐	suspected releases properly investigated within 7 days of inconclusive or failed report to confirm or deny the occurrence of a release test vendor: _____
					Groundwater Monitoring: (Tank code J and/or Piping code E)
N/A ☐	☐	☐	☐	☐	regulated substance stored is immiscible in water and has specific gravity less than 1
☐	☐	☐	☐	☐	groundwater is within 20 feet of surface grade and soil hydraulic conductivity is greater than or equal to 0.01 cm/sec
☐	☐	☐	☐	☐	casing is properly slotted and allows entry of product during high and low groundwater conditions
☐	☐	☐	☐	☐	wells are sealed from ground surface to the top of the filter pack
☐	☐	☐	☐	☐	site evaluation verifies the above information and wells are located according to site evaluation; attach page with evaluator authentication to the inspection report
☐	☐	☐	☐	☐	monitoring devices can detect 1/8 inch of product or less on water
☐	☐	☐	☐	☐	maintenance records, for the last year, including calibration, preventative and repair
☐	☐	☐	☐	☐	equipment manufacturer's performance claims are available
☐	☐	☐	☐	☐	monitoring wells are marked and secured
☐	☐	☐	☐	☐	wells monitored and results recorded monthly in accordance with site evaluation
					Vapor Monitoring: (Tank code K and/or Piping code F)
N/A ☐	☐	☐	☐	☐	stored substance is sufficiently volatile and backfill allows diffusion of vapors from releases
☐	☐	☐	☐	☐	the monitoring device is not rendered inoperative by groundwater, rainfall or soil moisture
☐	☐	☐	☐	☐	background contamination will not interfere with vapor monitoring
☐	☐	☐	☐	☐	vapor monitors are designed and operated to detect increases in concentrations of stored substance
☐	☐	☐	☐	☐	site evaluation verifies above information and wells are located according to the site evaluation; attach page with evaluator authentication to the inspection report
☐	☐	☐	☐	☐	maintenance records, for the last year, including calibration, preventative and repair
☐	☐	☐	☐	☐	equipment manufacturer's performance claims are available
☐	☐	☐	☐	☐	monitoring wells are marked and secured
☐	☐	☐	☐	☐	wells monitored and results recorded monthly in accordance with site evaluation

UNDERGROUND STORAGE TANK FACILITY
OPERATIONS INSPECTION

Facility Name B. Braun Medical **Date** 6-4-08 **Facility ID** 39 - 37781

II. RELEASE DETECTION REFERENCE (continued)

Pipe System 001	Pipe System ___	Pipe System ___	Pipe System ___	Pipe System ___	
Interstitial Monitoring: (Piping code D and/or L)					
N/A ☐	☐	☐	☐	☐	interstitial area monitored monthly (required)
☐	☐	☐	☐	☐	secondary enters sump and allows a release to contact probe/sensor
☐	☐	☐	☐	☐	interstitial sensors properly placed (per manufacturer's instructions)
☐	☐	☐	☐	☐	monitoring wells or ports (when used) are clearly marked and secured
☐	☐	☐	☐	☐	maintenance records, for the last year, including preventative and repair
☐	☐	☐	☐	☐	equipment manufacturer's performance claims are available
☐	☐	☐	☐	☐	secondary barrier (pipe) is compatible with and impermeable to the stored substance
☐	☐	☐	☐	☐	(Code L only) continuous monitoring used as line leak detector (gravity or pressurized piping) – capable of detecting 3.0 gph release within 1 hour
☐	☐	☐	☐	☐	(Code L only) system tested for operability within the last year
☐	☐	☐	☐	☐	(Code L only) monthly "sensor status" (or equivalent) records available
☐	☐	☐	☐	☐	(Code L only) product in sump shuts off pump
Piping Tightness (Line) Testing: (Piping only – code B, C or K (0.1))					
N/A ☐	☐	☐	☐	☐	test conducted at proper frequency ⌘ conducted annually for **pressurized** piping without monthly monitoring ⌘ conducted every 3 years for **suction** piping not meeting code I requirements date of last test: _____ method used: _____
☐	☐	☐	☐	☐	test certification of ability to detect 0.1 gph release at 1.5 times operating pressure is available
☐	☐	☐	☐	☐	if test device permanently installed, maintenance records, for the last year, including calibration, preventative and repair
Automatic (mechanical) Line Leak Detector: (PRESSURIZED Piping only – code A)					
N/A ☐	☐	☐	☐	☐	annual operational test of leak detector according to manufacturer's instructions date tested: _____
☐	☐	☐	☐	☐	certification of ability to detect a release of 3 gph at 10 psig within 1 hour is available
☐	☐	☐	☐	☐	maintenance records, in addition to the annual test, for last year, including calibration, preventative and repair
☐	☐	☐	☐	☐	pump is automatically shut off on detection of a possible release
Electronic Line Leak Detector: (PRESSURIZED Piping only – code K)					
N/A ☐	☐	☐	☐	☐	self checking or system tested for operability within the last year date tested: _____
☐	☐	☐	☐	☐	certification of ability to detect a release of 3 gph at 10 psig within 1 hour is available
☐	☐	☐	☐	☐	maintenance records, in addition to annual test, for last year, including calibration, preventative and repair
☐	☐	☐	☐	☐	continuously monitors piping
☐	☐	☐	☐	☐	device shuts off pressure pump on test failure
Is the electronic leak detector performing the "monthly" monitoring function? ☐ Yes, ☐ No If yes:					
☐	☐	☐	☐	☐	third-party certification of ability to detect 0.2 gph release is available
☐	☐	☐	☐	☐	documentation of monthly test available for last year
Is the electronic leak detector performing the "annual" monitoring function? ☐ Yes, ☐ No If yes:					
☐	☐	☐	☐	☐	third-party certification of ability to detect 0.1 gph release is available date passing test(s) _____

Instructions: ***Check the box to indicate that a criterion has been met. Circle the box to indicate that a criterion has not been met. Circle with "N/A" when a criterion is not applicable (provide comment).***

UNDERGROUND STORAGE TANK FACILITY
OPERATIONS INSPECTION

Facility Name B. Braun Medical **Date** 6-4-08 **Facility ID** 39 - 37781

II. RELEASE DETECTION REFERENCE (continued)

Tank System 001	Tank System —	Tank System —	Tank System —	Tank System —	
					Instructions: ***Check the box to indicate that a criterion has been met. Circle the box to indicate that a criterion has not been met. Circle with "N/A" when a criterion is not applicable (provide comment).***

Exempt Suction System: (SUCTION piping only – code I) Gravity Piping System
NOTE: No further release detection required on piping meeting all these criteria.

☑	☐	☐	☐	☐	the tank top is lower than the ~~suction pump inlet~~ gravity piping inlet
☑	☐	☐	☐	☐	the below grade piping slopes uniformly back to the tank
☐	☐	☐	☐	☐	there is no more than one check valve in the piping
N/A	☐	☐	☐	☐	the check valve is located close to or inside the suction pump
	☐	☐	☐	☐	compliance with above specifications can be readily determined; describe in comments (Section IV.)

IUM Release Detection Record Review: (All release detection codes)

ξ An empty tank (less than 1" of product/sludge) or a tank supplying an emergency generator only is not required to perform release detection. Indicate date emptied or that it is an emergency generator tank in comments (Section IV).

ξ Recently installed tank systems must begin performing release detection immediately after receiving product. Indicate date of first product receipt in comments (Section IV).

☑	☐	☐	☐	☐	tank release detection records for the last 12 months the system contained product are available
☑	☐	☐	☐	☐	tank release detection records are valid and passing
☑	☐	☐	☐	☐	monthly check for water in tank conducted and documented
N/A	☐	☐	☐	☐	piping release detection records for the last 12 months the system contained product are available
	☐	☐	☐	☐	piping release detection records are valid and passing

III. CORROSION PROTECTION COMPLIANCE CRITERIA

Lined Tanks: (Tank only – code I)

N/A	☐	☐	☐	☐	tank inspected and lined according to national standard date lined: _____
	☐	☐	☐	☐	tank initially inspected 10 years after lining and every 5 years thereafter date(s) inspected: _____

Galvanic Cathodic Protection: (Tank code B or O, and/or Piping (may include code B))

N/A	☐	☐	☐	☐	structure to soil potential (include values in comments) greater than 0.85 volts, **or**
	☐	☐	☐	☐	meets other nationally recognized protection standard: specify: _____
	☐	☐	☐	☐	**tank** monitoring satisfactory: last 2 dates: _____
	☐	☐	☐	☐	**piping/flex** monitoring satisfactory: last 2 dates: _____

- monitoring conducted within six months of installation
- monitoring conducted every three years
- monitoring conducted within 6 months of repair or system disturbance

Impressed Current Cathodic Protection: (Tank code C or P, and/or Piping (may include code B))

N/A	☐	☐	☐	☐	structure to soil potential (include values in comments) greater than 0.85 volts, **or**
	☐	☐	☐	☐	meets other nationally recognized protection standard: specify: _____
	☐	☐	☐	☐	documentation of last two monitoring results date(s) measured: _____

- monitoring conducted within six months of installation
- monitoring conducted every three years
- monitoring conducted within 6 months of repair or system disturbance

	☐	☐	☐	☐	documentation of last three amp (plus volt and runtime when meters available) readings documented (include values in comments)

- readings recorded every 60 days

	☐	☐	☐	☐	system is turned on and functioning within design limits
	☐	☐	☐	☐	system designed by a corrosion expert

UNDERGROUND STORAGE TANK FACILITY
OPERATIONS INSPECTION

Facility Name B Braun Medical **Date** 6-4-2008 **Facility ID** 39 – 37781

IV. COMMENTS should include – suspected contamination; improperly closed or unregistered tanks; "other" tank system attributes; tank system modifications (with date); estimated installation date when actual date is unknown; release detection exemptions, missing months and months with failures or inconclusives; description of suspected release investigations; rectifier readings; CP surveys; owner/operator actions needed for compliance; changes at site since initial inspection (with date); explanation of N/As; recommendations made to owner/operator; description of technical assistance given to the owner/operator; date(s) of last containment test and other information that would be helpful to the owner, operator or DEP when reviewing the inspection.

The previous facility operations inspection was performed on 8-31-2005.

Tank # 001 is used to store approximately 99% condensate water and about 1% Ethylene Glycol.

Page 2, Section # 6, Total Secondary Containment; There is single walled piping associated with this underground storage tank (UST) system.

Page 2, Section # 7, Tank Construction; The tank is an Elutron Tanx, Inc. brand of steel primary tank with a fiberglass outer jacket.

Page 2, Section # 8, Piping Construction; There is no product piping leaving the tank. All of the piping is inlet drain piping to the tank. The drain piping is constructed of schedule 40 PVC single walled plastic piping.

There is no discharge piping associated with this UST.

Page 2, Section # 9, Piping Sumps at Tank Top; There is no secondary containment piping sump at the tank top.

Piping sump testing was not required at the time of this piping system installation in April 1999.

Page 2, Section # 10, Dispenser Pans; There is no dispenser associated with this UST. Piping sump testing was not required at the time of this piping system installation in April 1999.

Page 2, Section # 11 A&B Piping Flexible Connectors; There are no piping flexible connectors associated with the piping system for this UST.

Page 2, Pump Delivery System; There is no pump system for this UST. The piping is a gravity flow method from inside the building to the UST.

Page 2, Section # 18, Tank Release Detection; Tank release detection method is monthly tank interstice monitoring.

I reviewed the past 18 months of passing tank contact/sensor readings for this UST system. The EBW Auto Stik Jr. 4 is used to monitor the tank liquid levels and to perform the monthly tank interstice sensor reporting.

Passing tank interstice sensor reports are kept in a neat and orderly fashion in the office.

Page 2, Section # 17 and # 18, Piping Release Detection; The piping system is exempt from piping release detection requirements due to the gravity flow type of piping system.

STATUS REPORT
WED JUN 04,08 10:43:26 AM
STATION NAME:
B. BRAUN
901 MARCON BLVD.
ALLENTOWN, PA 18103

TANK 1 PRODUCT: GLYCOL

CURRENT STATUS:

GROSS:	1314.19 gal
NET:	1308.67 gal
FUEL LEVEL:	34.204 in
WATER LEVEL:	27.804 in
TEMP:	66.46 °F
GROSS VTF:	2774.80 gal
GROSS ULLAGE:	90%=2365.90 gal

CONTACT PROGRAM REPORT
WED JUN 04,08 10:43:36 AM
STATION NAME:
B. BRAUN
901 MARCON BLVD.
ALLENTOWN, PA 18103

CONTACT 1

NAME:	INTERSTITL
SENSE:	N.C.
TIED TO RELAY:	NONE
CONTACT IS:	NORMAL

STORAGE TANKS
FACILITY
AUG - 7 2008
ID #
COUNTY:
FILE CODE:

STATUS REPORT
WED JUN 04,08 10:44:45 AM
STATION NAME:
B. BRAUN
901 MARCON BLVD.
ALLENTOWN, PA 18103

TANK 1 PRODUCT: GLYCOL

CURRENT STATUS:

GROSS:	1314.26 gal
NET:	1308.74 gal
FUEL LEVEL:	34.205 in
WATER LEVEL:	27.807 in
TEMP:	66.45 °F
GROSS VTF:	2774.73 gal
GROSS ULLAGE:	90%=2365.83 gal

MANUAL LEAK TEST
WED JUN 04,08 10:45:19 AM
STATION NAME:
B. BRAUN
901 MARCON BLVD.
ALLENTOWN, PA 18103

TANK 1 PRODUCT: GLYCOL

LEAK RATE: 0.00 gal/hr
CANCELLED BY LOW VOLUME

PERCENT OF TANK TESTED: 7.9 %
START: FRI JUN 22,07 8:30:18 AM
BEG FUEL LEVEL: 12.769 in
BEG WATER LEVEL: 6.372 in
0.00 gal, 32.00 °F
0.00 gal, 32.00 °F
0.00 gal, 32.00 °F
0.00 gal, 32.00 °F
END: FRI JUN 22,07 8:30:22 AM
END FUEL LEVEL: 12.769 in
END WATER LEVEL: 6.372 in

DROP HISTORY REPORT
WED JUN 04,08 10:35:09 AM
STATION NAME:
B. BRAUN
901 MARCON BLVD.
ALLENTOWN, PA 18103

TANK 1 PRODUCT: GLYCOL

END: TUE DEC 21,04 8:22:49 AM
INVENTORY CHANGE: 70.48 gal
END: TUE DEC 20,05 8:08:54 AM
INVENTORY CHANGE: 308.17 gal
END: TUE DEC 20,05 4:16:16 PM
INVENTORY CHANGE: 160.92 gal
END: MON FEB 20,06 4:23:55 PM
INVENTORY CHANGE: 666.98 gal
END: TUE AUG 22,06 7:27:44 AM
INVENTORY CHANGE: 59.80 gal
END: FRI NOV 10,06 12:39:41 PM
INVENTORY CHANGE: 113.31 gal

DROP REPORT
WED JUN 04,08 10:34:33 AM
STATION NAME:
B. BRAUN
901 MARCON BLVD.
ALLENTOWN, PA 18103

TANK 1 PRODUCT: GLYCOL

START: FRI NOV 10,06 12:26:44 PM
BEG VOLUME: 1156.88 gal
BEG FUEL LEVEL: 31.368 in
BEG TEMP: 67.37 °F
END: FRI NOV 10,06 12:39:41 PM
END VOLUME: 1270.19 gal
END FUEL LEVEL: 33.503 in
END TEMP: 69.00 °F

INVENTORY CHANGE: 113.31 gal

STATUS REPORT
WED JUN 04,08 10:33:51 AM
STATION NAME:
B. BRAUN
901 MARCON BLVD.
ALLENTOWN, PA 18103

TANK 1 PRODUCT: GLYCOL

CURRENT STATUS:

GROSS:	1314.09 gal
NET:	1308.57 gal
FUEL LEVEL:	34.202 in
WATER LEVEL:	27.803 in
TEMP:	66.46 °F
GROSS VTF:	2774.89 gal
GROSS ULLAGE:	90%=2365.99 gal

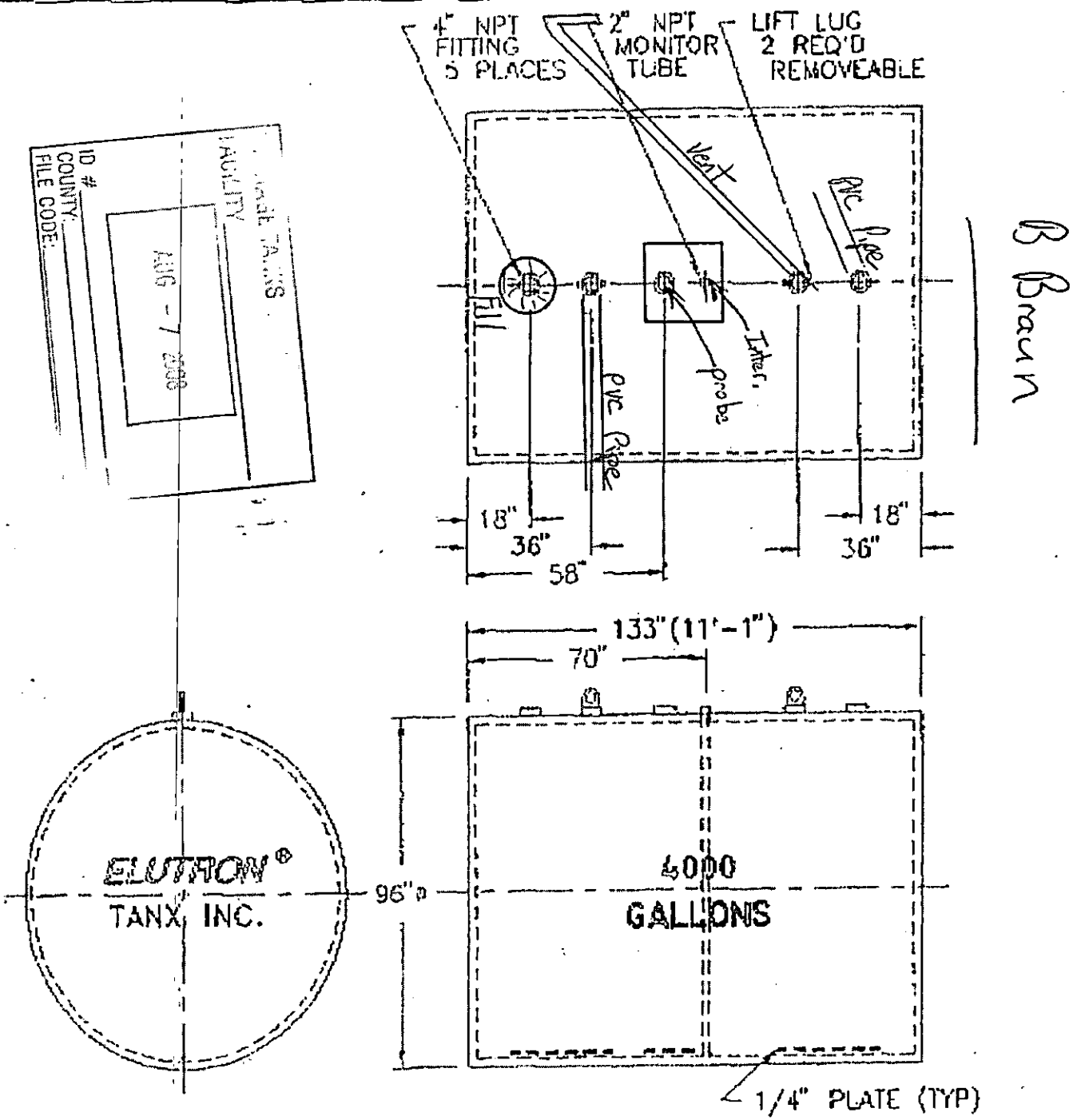
4" NPT FITTING 5 PLACES
2" NPT MONITOR TUBE
LIFT LUG 2 REQ'D REMOVEABLE
Vent
PVC Pipe
Fill
Inter. probe
PVC Pipe
18"
36"
58"
18"
36"
133" (11'-1")
70"
96"
4000 GALLONS
1/4" PLATE (TYP)
ELUTRON®
TANX, INC.
ID #
COUNTY
FILE CODE
FACILITY
AUG - 7 2008

B Braun

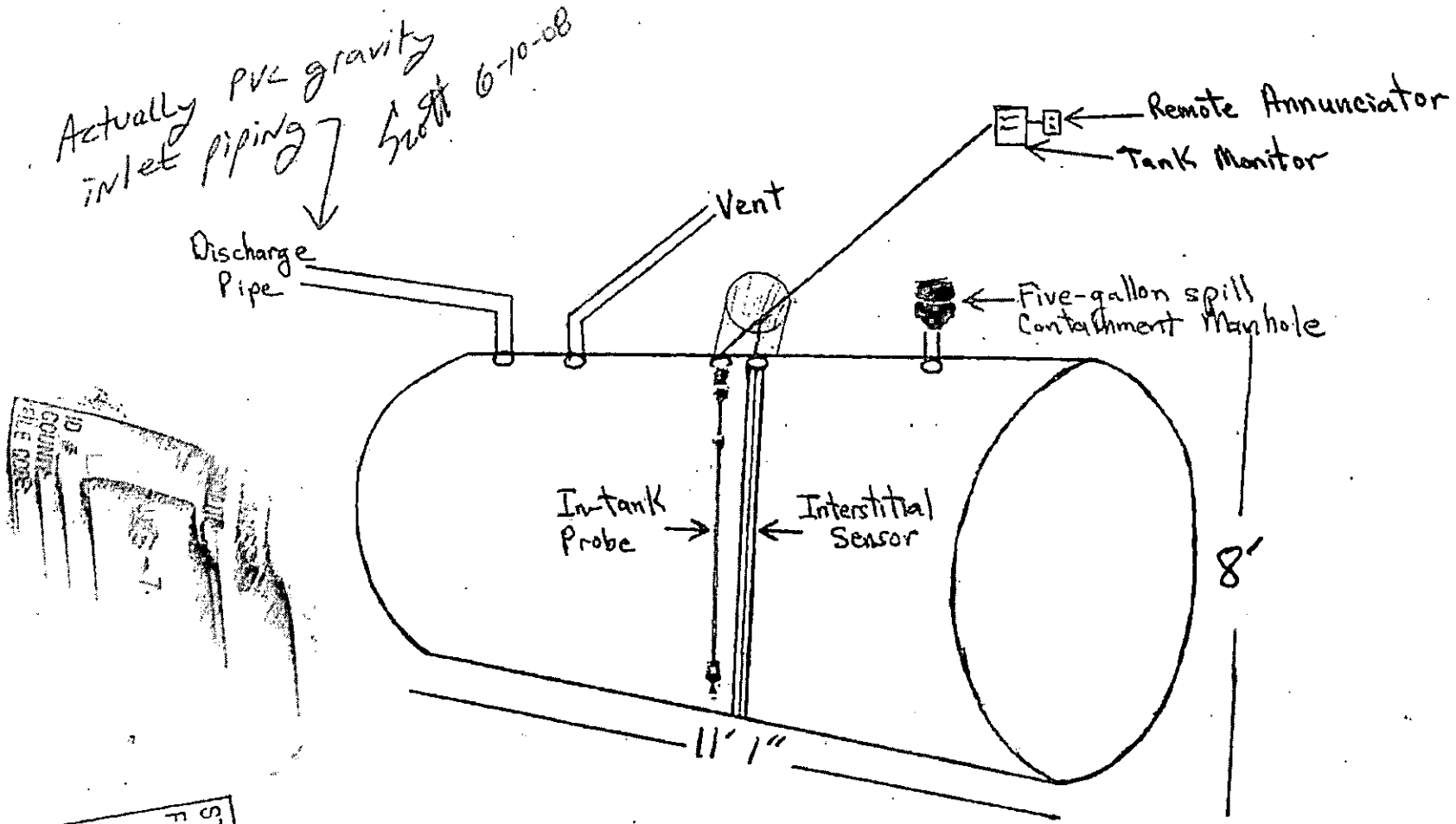

STORAGE TANKS FACILITY
AUG - 7 2008
ID #
COUNTY:
FILE CODE:

B BRAUN 4,000 GALLON TANK SYSTEM