REPORT FINALIZATION AND QUALITY ASSURANCE FORM

PROJECT INFORMATION

7/34 ✓

Client Name:	Bowater-Catawba	Document Number:	
Project Name:		Primary Author:	NH
Document Title:	No. 2 RF PM Comp	Project Manager:	TS
Work Order No.:	03917.008.007	QA Officer:	MW
Client E-mail Address:		Final Due to PM On:	
File Location:		Final Due To Client On:	

ACTION REQUEST

1	Edit marked text	9	Fix document formatting
2	Create standard cover page	10	Run spell checker
3	Create TOC/LOT/LOF	11	Proofread recent edits only
4	Update TOC/LOT/LOF	12	Letter Head
5	Add/update page numbers	13	Number appendices
6	Add appendices cover pages	14	Review
7	Add/fix document footers	15	Send Draft
8	Add/fix document headings	16	Copy and Send Final Report

Draft No.	Submitted By:	Submitted On:	Requested Back By:	Work Requested:	Requested From:	Work Completed By:	Date Completed:
1	NH	Date: 7/28/06 Time: 1200	☑ Today ☐ Tomorrow ☐ This Week ☐ Other: Date: 7/28 Time:	1-11	DPS	Jill	7-31
2	NH	Date: 7/31/06 Time: 1630	☑ Today ☐ Tomorrow ☐ This Week ☐ Other: Date: 7/31 Time:	1	DPS	Jill	8-1
3	NH	Date: 8/1/06 Time: 1600	☑ Today ☐ Tomorrow ☐ This Week ☐ Other: Date: 8/1 Time:	14	JO	[illegible]	8/2/06
4	NH	Date: 8/15/06 Time: 1545	☑ Today ☐ Tomorrow ☐ This Week ☐ Other: Date: 8/15 Time:	1	DPS	MD	8/15/06
5	NH	Date: 8/15/06 Time: 1630	☑ Today ☐ Tomorrow ☐ This Week ☐ Other: Date: 8/15 Time:	15 pdf - entire Jacque Taylor	DPS	MD	8/15

Client Name:		Document Number:	
Document Title:		Project Manager:	
Work Order No.:		Final Due To Client On:	

3 Copies Notebook

Draft No.	Submitted By:	Submitted On:	Requested Back By:	Work Requested:	Requested From:	Work Completed By:	Date Completed:
6		Date: / / Time:	☐ Today ☐ Tomorrow ☐ This Week ☐ Other Date: Time:	1-4	MW	[illegible]	8/14
7	NA	Date: 8/17/06 Time: 0845	☐ Today ☐ Tomorrow ☐ This Week ☐ Other Date: 8/17 Time:	1, 12, 13	DPS	[illegible]	8/17
8	NA	Date: 8/17/06 Time: 1030	☐ Today ☐ Tomorrow ☐ This Week ☐ Other Date: 8/17 Time:	Copy QC →	DPS →	[illegible]	8.17
9		Date: / / Time:	☐ Today ☐ Tomorrow ☐ This Week ☐ Other Date: Time:	Final QC		[illegible]	8.17
10		Date: / / Time:	☐ Today ☐ Tomorrow ☐ This Week ☐ Other Date: Time:				
11		Date: / / Time:	☐ Today ☐ Tomorrow ☐ This Week ☐ Other Date: Time:				
12		Date: / / Time:	☐ Today ☐ Tomorrow ☐ This Week ☐ Other Date: Time:				
13		Date: / / Time:	☐ Today ☐ Tomorrow ☐ This Week ☐ Other Date: Time:				

Report Review Requirements

Review Element & Objective	Critical Considerations	Responsibility For:	Completed By: Initials	Completed By: Action
Test Program Scope	Were all quoted sources tested?	PM		
	Were quoted methods used?	PM		
Did we do what we were hired to do?	Were test conditions right?	PM		
	Were there method, condition or source additions?	PM		
Test Program Methods	Were quoted methods applied as required by method and permit/standard?	TD		
Did we do the work the way we said we would?	Were calculations performed as required by the method?	TD		
	Are deviations identified and explained?	TD		
Calculations	Were the correct data sheets used?	TD	mh	
	Were the correct spreadsheets used?	TD		
Did we reduce the data properly?	Were the data sheets and spreadsheets used correctly?	TD		
	Are data reported in the correct units?	TD		
Quality Control & Accreditation	Have the QC "basics" been checked?	QM		
	Has all required QC been performed?	QM		
Does the data set have integrity?	Have QC results been presented and explained?	QM		
	Have we fulfilled and documented accreditation requirements if required?	QM		
Test Program Results	Do the data make sense (run-to-run, for the process, etc.)?	PM/TD		
What does it all mean?	Have we presented our conclusion?	PM/TD		
Have we drawn a conclusion?	Have we described the impact of outlying source or QC data?	PM/TD		
Test Program Personnel	Are test team members and responsibilities identified?	PM		
Who is accountable for the test program?	Are client contacts and responsibilities identified?	PM		
	Are agency observers identified?	PM		
Style and Grammar	Was a standard template used?	QM	mh	14
	Does the format conform to Weston Style Guide?	QM		
Does the document reflect the work of a top-tier consulting firm?	Has the document been checked (copy quality, completeness, shipping info, signatures)?	QM		

Initials: Provide the initials of the person providing the review.
Action: Use a number to identify required action and index the information below.

Number	Corrective Action
1	Data entry error; error has been corrected.
2	Data entry error; error needs correction.
3	Appendices out of order.
4	QC documentation missing.
5	Production data missing or used improperly.
6	Incorrect or missing field team member/state representative.
7	Needs further explanation.
8	Items need to be removed.
9	Source results should be split into separate reports.
10	Need verification from client.
11	Sample calculations need correction.
12	Address is incorrect.
13	Copy and/or shipping requirements need correction.
14	need note table 2-2 explaining stack gas data; need analyzer's CO_2 calibration; need post test cals
15	
16	

Weston Solutions, Inc.
1625 Pumphrey Avenue
Auburn, Alabama 36832-4303
334-466-5600 • Fax 334-466-5660
www.westonsolutions.com

17 August 2006

Ms. Jacquelyn Taylor
Bowater Incorporated
5300 Cureton Ferry Road
Catawba, South Carolina 29704

Work Order No. 03917.008.007

Re: No. 2 Recovery Furnace and No. 1 and No. 2 Combination Boilers
Emission Compliance Test Reports

Dear Ms. Taylor:

Enclosed are three copies of each of the above-referenced test reports. Submission of these reports was authorized by your purchase order. An invoice has been forwarded under separate cover.

We appreciate the cooperation and help you and your staff provided during the project. If there are any questions regarding the reports, or if we can be of additional assistance to you in any way, please contact me at 334-466-5627. We look forward to working with you in the future.

Sincerely,

WESTON SOLUTIONS, INC.

Joseph P. Quinn for

Templeton Simpkins
Project Manager

jb

Enclosure

K:\03917\008\007\REPORT\#2 RF\BOWATER CATAWBA JULY 06 #2 RF PM COMP RPT.DOC

17 August 2006 9:30 a.m. Version

Work Order No. 03917.008.007

No. 2 Recovery Furnace
Particulate Matter and Total Reduced Sulfur
Emission Compliance Test Report
Bowater Incorporated
Catawba, South Carolina
20 July 2006

Prepared For

BOWATER INCORPORATED
5300 Cureton Ferry Road
Catawba, South Carolina 29704

Temp Simpkins
Project Manager
Approved for Transmittal

Melanie Wright, Ph.D.
Quality Assurance Manager
Approved for Transmittal

Prepared By

WESTON SOLUTIONS, INC.
1625 Pumphrey Ave.
Auburn, Alabama 36832-4303
Phone: (334) 466-5600 Fax: (334) 466-5660

17 August 2006

TABLE OF CONTENTS

SECTION 1 INTRODUCTION 1-1

SECTION 2 RESULTS AND DISCUSSION 2-1

SECTION 3 SOURCE TESTING METHODOLOGY 3-1

APPENDIX A SAMPLE CALCULATIONS

APPENDIX B TEST METHODOLOGY

APPENDIX C FIELD DATA – NO. 2 RECOVERY FURNACE

APPENDIX D LABORATORY DATA

APPENDIX E QUALITY CONTROL DATA

APPENDIX F PROCESS OPERATING/PRODUCTION DATA

LIST OF TABLES

Table 2-1 No. 2 Recovery Furnace Summary of PM Emission Results 2-1

Table 2-2 No. 2 Recovery Furnace Summary of TRS Emission Results 2-2

Table 3-1 Source Testing Methodology 3-1

SECTION 1
INTRODUCTION

Weston Solutions, Inc. (WESTON®) was retained by Bowater Incorporated (Bowater) to conduct particulate matter (PM) and total reduced sulfur (TRS) emission testing on the No. 2 Recovery Furnace (RF) at the mill in Catawba, South Carolina. The purpose of the testing was to demonstrate compliance with the South Carolina Department of Health and Environmental Control (DHEC) permit limits.

WESTON performed the emission testing on 20 July 2006. The project team was comprised of the following individuals.

Name	Project Role
Temp Simpkins	Project Manager/Test Team Leader
Wayne Roberts	Technical Director
Melanie Wright	Quality Assurance Manager
Bart McDaniel	Test Team Member
Justin Hall	Test Team Member
Natalie Hornsby	Report Coordinator

Ms. Jacquelyn Taylor of Bowater coordinated the testing with mill operations and served as WESTON's technical contact throughout the effort. A representative of DHEC was not present during the testing.

Tables 2-1 and 2-2 provide detailed summaries of the emission results with comparison to the permit limits. The results are less than the applicable standard for the source. Any differences between the calculated results presented in the appendices and the results reported in the summary tables are due to rounding for presentation.

TABLE 2-1
NO. 2 RECOVERY FURNACE
SUMMARY OF PM EMISSION RESULTS

	Run 1	Run 2	Run 3	Mean
Date	7/20/06	7/20/06	7/20/06	----
Time Began	0830	1037	1326	----
Time Ended	0939	1145	1437	----
Stack Gas Data				
Temperature, °F	380	384	379	381
Velocity, ft/sec	60	60	56	59
Moisture, %	26	25	26	26
CO_2 Concentration, %	13.0	12.7	13.1	12.9
O_2 Concentration, %	6.6	6.9	6.5	6.7
VFR, x 10^5 dscfm	1.18	1.19	1.12	1.16
Production Rate, ADTP/hr	25	25	25	25
Particulate Matter				
Isokinetic Sampling Rate, %	98	96	98	97
Emission Factor, lb/ADTP	0.254	0.203	0.137	0.198
Permit Limit, lb/ADTP	----	----	----	**2.75**

TABLE 2-2
NO. 2 RECOVERY FURNACE
SUMMARY OF TRS EMISSION RESULTS

	Run 1	Run 2	Run 3	Mean
Date	7/20/06	7/20/06	7/20/06	----
Time Began	0814	1133	1448	----
Time Ended	1111	1430	1745	----
Stack Gas Data				
Temperature, °F	383	382	380	382
Velocity, ft/sec	60	58	53	57
Moisture, %	26	25	22	24
CO_2 Concentration, %	12.9	12.9	13.1	13.0
O_2 Concentration, %	6.1	6.4	6.2	6.2
VFR, x 10^5 dscfm[a]	1.18	1.15	1.10	1.14
Total Reduced Sulfur				
Concentration, ppm	1.67	2.27	2.29	2.08
Concentration, ppm @ 8% O_2	1.46	2.02	2.01	1.83
Permit Limit, ppm @ 8% O_2	**----**	**----**	**----**	**20**

[a]The VFR for Run 1 is the average of Runs 1 and 2 of the concurrent PM testing. Run 2 is the average of Runs 2 and 3 of the concurrent PM testing. Run 3 is from an independent flow measurement.

SECTION 3
SOURCE TESTING METHODOLOGY

The emission testing program was conducted in accordance with the U.S. EPA Reference Methods summarized in Table 3-1. Method descriptions and quality assurance data are provided in the referenced appendices.

TABLE 3-1
SOURCE TESTING METHODOLOGY

Parameter	Method Number	Appendix Reference		Comments
		Method Description	Quality Control Data	
Volumetric Flow Rate	1,2,3,4	B.1	E	
Gas Composition	3A	B.2	E	
Particulate Matter	5	B.3	E	
Total Reduced Sulfur	16	B.4	E	

Integrated bag samples were collected during PM sampling at the Recovery Boiler and analyzed on the calibrated O_2/CO_2 analyzers.

Post-test equipment calibrations for the probe and pitot will be maintained on file at WESTON.

APPENDIX A
SAMPLE CALCULATIONS

SAMPLE CALCULATIONS

No. 2 Recovery Furnace
Run No. 1

Meter Pressure (Pm), in. Hg

$$Pm = Pb + \frac{\Delta H}{13.6\ in.\ H_2O/in.\ Hg}$$

where, Pb = barometric pressure, in. Hg
ΔH = Pressure differential of orifice in. H_2O

$$Pm = 29.47\ in.\ Hg + \frac{1.538\ \ in.\ H_2O}{13.6\ in.\ H_2O/in.\ Hg} = 29.58\ in.\ Hg$$

Absolute Stack Gas Pressure (Ps), in. Hg

$$Ps = Pb + \frac{Pg}{13.6\ in.\ H_2O/in.\ Hg}$$

where, Pb = barometric pressure, in. Hg
Pg = Static Pressure, in. H_2O

$$Ps = 29.47\ in.\ Hg + \frac{-0.62\ in.H_2O}{13.6\ in.\ H_2O/in.\ Hg} = 29.42\ in.\ Hg$$

Standard Meter Volume (Vmstd), dscf

$$Vmstd = \frac{17.64\ °R/in.\ Hg\ \ x\ \ Y\ \ x\ \ Vm\ \ x\ \ Pm}{Tm}$$

where, Y = meter correction factor
Vm = meter volume, cf
Pm = meter pressure, in. Hg
Tm = meter temperature, °R

$$Vmstd = \frac{17.64\ °R/in.\ Hg\ \ x\ \ 0.9920\ \ x\ \ 44.808\ cf\ \ x\ \ 29.58\ in.\ Hg}{549\ °R} = 42.280\ dscf$$

Standard Wet Volume (Vwstd), scf

$$Vwstd = 0.04707\ ft^3/mL\ x\ Vlc$$

where, Vlc = volume of H_2O collected, mL

$$Vwstd = 0.04707\ ft^3/mL\ x\ 314.6\ mL = 14.808\ scf$$

Moisture Fraction (Measured), (Bws)

$$Bws = \frac{Vwstd}{(Vwstd + Vmstd)} = \frac{14.808\ scf}{14.808\ scf\ +\ 42.280\ dscf} = 0.259$$

where, Vwstd = standard wet volume, scf
Vmstd = standard meter volume, dscf

Moisture,%

$$Moisture = Bws\ x\ 100 = 0.259\ x\ 100 = 25.9$$

Molecular Weight (DRY) (Md), lb/lb-mole

$$Md = (0.44\ x\ \%\ CO_2) + (0.32\ x\ \%\ O_2) + (0.28\ (100 - \%\ CO_2 - \%\ O_2))$$

$$Md = (0.44\ x\ 13.0) + (0.32\ x\ 6.6) + (0.28\ (100 - 13.0 - 6.6)) = 30.34\ lb/lb\text{-}mole$$

Molecular Weight (WET) (Ms), lb/lb-mole

$$Ms = Md\ (1 - Bws) + 18\ (Bws)$$

where, Md = molecular weight (DRY), lb/lb-mole
Bws = moisture fraction, dimensionless

$$Ms = 30.34\ lb/lb\text{-}mole\ (1 - 0.259) + 18\ (0.259) = 27.14\ lb/lb\text{-}mole$$

Average Velocity (Vs), ft/sec

$$Vs = 85.49 \frac{ft}{sec} \sqrt{\frac{(lb/lb\text{-}mole)(in.\ Hg)}{(°R)(in.\ H_2O)}}\ x\ Cp\ x\ \sqrt{Delta\ P}\ avg.\ x\ \sqrt{\frac{Ts}{Ps\ x\ Ms}}$$

where, Cp = pitot tube coefficient
Delta P = velocity head of stack gas, in. H_2O
Ts = absolute stack temperature, °R
Ps = absolute stack gas pressure, in. Hg
Ms = molecular weight of stack gas, lb/lb-mole

$$Vs = 85.49 \frac{ft}{sec} \sqrt{\frac{(lb/lb\text{-}mole)(in.\ Hg)}{(°R)(in.H_2O)}}\ x\ 0.84\ x\ 0.812\ in.H_2O\ x\ \sqrt{\frac{840\ °R}{29.42\ in.\ Hg\ x\ 27.14\ lb/lb\text{-}mole}}$$

$$Vs = 59.80\ ft/sec$$

Average Stack Gas Flow at Stack Conditions (Qa), acfm

$$Qa = 60\ sec/min\ x\ Vs\ x\ As$$

where, Vs = stack gas velocity, ft/sec
As = cross-sectional area of stack, ft^2

$$Qa = 60\ sec/min\ x\ 59.80\ ft/sec\ x\ 71.82\ ft^2 = 2.58\ E{+}05\ acfm$$

Average Stack Gas Flow at Standard Conditions (Qs), dscfm

$$Qs = 17.64 \frac{°R}{in.\ Hg}\ x\ Qa\ x\ (1 - Bws)\ x\ \frac{Ps}{Ts}$$

where, Qa = average stack gas flow at stack conditions, ft^3/min
Bws = moisture content (dimensionless)
Ps = absolute stack gas pressure, in. Hg
Ts = absolute stack temperature, °R

$$Qs = 17.64 \frac{°R}{in.\ Hg}\ x\ 2.58\ E{+}05 \frac{acf}{min}\ x\ (1 - 0.259)\ x\ \frac{29.42\ in.\ Hg}{840\ °R} = 1.18\ E{+}05\ dscfm$$

Percent Isokinetic Sampling Rate (%I)

$$\%I = \frac{0.0945(in.Hg)(min)/(°R)(sec)\ x\ Ts\ x\ Vmstd}{Ps\ x\ Vs\ x\ An\ x\ \Theta\ x\ (1 - Bws)}$$

where, Ts = avg. stack temperature, °R
Vmstd = standard meter volume, dscf
Ps = absolute stack gas pressure, in. Hg
Vs = stack gas velocity, ft/sec
An = cross-sectional area of nozzle, ft^2
Θ = total sampling time, min
Bws = moisture content (dimensionless)

$$\%I = \frac{0.0945(in.Hg)(min)/(°R)(sec)\ x\ 840°R\ x\ 42.280\ dscf}{29.42\ in.Hg\ x\ 59.80\ ft/sec\ x\ 4.12\ E\text{-}04\ ft^2\ x\ 64\ min\ x\ (1 - 0.259)}$$

$$\%I = 97.6$$

Particulate Matter Concentration at Standard Conditions (Cs), gr/dscf

$$Cs = 15.43\frac{gr}{g}\ x\ \frac{Mn}{Vmstd} = 15.43\frac{gr}{g}\ x\ \frac{0.0172\ g}{42.280\ dscf} = 0.0063\ gr/dscf$$

where, Mn = particulate matter collected, g
Vmstd = std. meter volume, dscf

Particulate Matter Concentration Corrected for O_2, Cs @ 8% O_2

$$Cs, \frac{gr}{dscf}\ x\ \frac{20.9 - 8\%\ O_2}{20.9 - measured\ \%\ O_2}$$

$$Cs = 0.0063\ x\ \frac{20.9 - 8\%\ O_2}{20.9 - 6.6\%\ O_2}$$

$$Cs = 0.0057$$

Particulate Matter Emission Rate (PMR), lb/hr

$$PMR = \frac{Cs \ x \ Qs \ x \ 60 \frac{min}{hr}}{7000 \frac{gr}{lb}}$$

where, Cs = particulate conc. at std. cond., gr/dscf
Qs = avg. stack gas flow at std. cond., dscf/min

$$PMR = \frac{0.0063 \ \frac{gr}{dscf} \ x \ 1.18 \ E+05 \frac{dscf}{min} \ x \ 60 \frac{min}{hr}}{7000 \frac{gr}{lb}} = 6.3 \ lb/hr$$

Particulate Matter Emission Factor, lb/ADTP

$$ER = \frac{Emission \ Rate, lb/hr}{Production \ Rate, ADTP/hr}$$

$$ER = \frac{6.3}{25} = 0.254 \ lb/ADTP$$

Total Reduced Sulfur Concentration Corrected for Recovery, ppm

$$= \left(\frac{Measured \ Concentration, \ ppm}{\% \ Recovery} \right) x \ 100$$

$$= \left(\frac{1.66}{99.6\%} \right) x \ 100 = 1.67 \ ppm$$

Total Reduced Sulfur Concentration Corrected to 8% O_2, ppm @ 8% O_2

$$= Recovery \ Corrected \ Concentration, \ ppm \ x \ \left(\frac{21 - 8}{21 - Measured \ O_2} \right)$$

$$= 1.67 \left(\frac{21 - 8.0}{21 - 6.1} \right) = 1.46 \ ppm \ @ \ 8\% \ O_2$$

Total Reduced Sulfur Emission Rate, lb/hr

$$ER = \frac{TRS\ conc.\ x\ MW\ x\ Qs\ x\ 60\frac{min}{hr}\ x\ 28.32\frac{L}{dscf}}{24.04\frac{L}{g\text{ - }mole}\ x\ 1.0\ x\ 10^{6}\ x\frac{\mu L}{L}\ x\ 454\frac{g}{lb}}$$

$$ER = \frac{1.67\ x\ 34.08\ x\ 1.18\ E+05\ x\ 60\ x\ 28.32}{24.04\ x\ 1.0\ x\ 10^{6}\ x\ 454}$$

$$ER = 1.0\ lb/hr$$

Total Reduced Sulfur Emission Factor, lb/ADTP (EF)

$$EF = \frac{lb/hr}{ADTP/hr}$$

$$EF = \frac{1.0}{25}$$

$$EF = 0.042\ lb/ADTP$$

APPENDIX B
TEST METHODOLOGY

B.1 VOLUMETRIC FLOW RATE

B.2 GAS COMPOSITION

B.3 PARTICULATE MATTER

B.4 TOTAL REDUCED SULFUR

B.1 VOLUMETRIC FLOW RATE

Mass emission rates are calculated by multiplying measured target analyte concentrations by calculated volumetric flow rates. Volumetric flow rates are calculated using measurement data obtained by EPA Reference Methods 1-4.

The ductwork is measured at the sample location to the nearest 0.25 inch using a steel tape measure. Traverse points are selected in accordance with EPA Reference Method 1 on the basis of ductwork dimensions, geometry, and upstream and downstream disturbances. When a sample location does not meet EPA Reference Method 1 criteria, the maximum recommended number of traverse points is used.

Gas Velocity

The velocity of the gas stream is measured in accordance with EPA Reference Method 2 by reading the instantaneous velocity pressure with an inclined manometer at each traverse point using either a standard "P" type or an "S" type pitot tube. The stack pressure is calculated from the measured static pressure of the stack and the ambient barometric pressure. The static pressure is measured by using the static side of the pitot tube, and the barometric pressure is measured using a calibrated aneroid barometer. Magnahelic® gauges with scales of 0 to 5 and 0 to 25 inches of water or an inclined manometer with a scale of 0 to 10 inches of water are used for velocity pressure measurements. Manometer selection is determined by the velocity pressure of the gas stream. A manometer with a 0 to 0.25 inch scale may be used when the velocity pressure of the gas stream is less than 0.02 inches of water. By convention, any measured velocity pressures of less than 0.005 inches of water are recorded and reported as less than 0.005 inches of water. The stack temperature is measured with a calibrated thermocouple and pyrometer.

For low velocity pressure measurements (less than 0.005 inches of water) a hot wire anemometer may be used to measure the velocity of the gas stream. The indicated velocity is used without correction when the gas stream is ambient air with a moisture content of less than 65%. The indicated velocity is corrected in accordance with procedures specified by the manufacturer when the moisture content exceeds 65% or when the dry gas fraction is something other than ambient air.

Gas Composition and Moisture Content

The composition of the gas stream is measured in accordance with EPA Reference Method 3A using an analyzer.

Integrated samples are collected by withdrawing a sample from the source through a moisture condenser into a Tedlar® sample bag. The bag is then analyzed using a calibrated O_2/CO_2 analyzer.

The moisture content of the gas stream is determined using one of the following procedures:

- For sources requiring testing by EPA Reference or Test Methods 5, 8, 12, 13, 17, 23, 26A, 29, 0010, or 0011, moisture is determined by EPA Reference Method 4. At the conclusion of each run the volume of condensed moisture in the impingers of the sampling train is measured and used to calculate the moisture content of the gas stream.

- For sources with temperatures greater than 212 °F, the approximation technique described in EPA Reference Method 4 may be used with midget impingers to condense moisture before dry gas volume measurement.

- For sources with a temperature of less than 212 °F, wet bulb/dry bulb temperature measurements may be made, and the moisture content calculated using vapor pressure tables.

When multiple methods are used for moisture determinations, the lowest moisture value is used for volumetric flow calculations.

The molecular weight of the gas stream is calculated using the measured moisture, oxygen, and carbon dioxide concentrations. The balance of the gas stream is assumed to be nitrogen. The volumetric flow is then calculated at stack and standard conditions using the calculated molecular weight, the measured stack temperature, and measured velocity, stack and barometric pressures. Standard conditions are 68 °F and 29.92 inches of mercury and 0% moisture.

Data Acquisition and Reporting

Data are recorded at the time of collection on preprinted data sheets. Calculations are performed (where possible) with preprogrammed calculators or spreadsheet software.

Quality Control

Quality control procedures for volumetric flow measurements involve leak checks of pitot tubes, pitot tube lines and manometers; periodic analysis of ambient air and duplicate analysis of source gas samples with the Fyrite analyzer; triplicate analysis with the Orsat analyzer; and periodic calibration checks of thermocouples and pyrometers.

Data transfers are minimized. Data sheets are checked for completeness and accuracy. Calculations are verified by a second person.

B.2 GAS COMPOSITION (INSTRUMENTAL)

Oxygen (O_2) and carbon dioxide (CO_2) testing is conducted in accordance with EPA Reference Method 3A.

Sampling Equipment and Procedures

Figure B-1 illustrates the sampling system. The sample is withdrawn continuously from the source through a heated probe, filter, and sample line to a sample conditioner which removes moisture from the gas stream. The sample is then transported to a California Analytical Model 300 O_2 analyzer and a California Analytical Model 300 CO_2 analyzer.

Sample Analysis

The O_2 analyzer uses an electrochemical cell or paramagnetic detector and the CO_2 analyzer uses a non-dispersive infra-red (NDIR) detector to produce an electrical signal which is linearly proportional to the O_2 and CO_2 concentration, respectively.

Data Acquisition and Reduction

Data is acquired electronically using an IBM compatible computer and software designed by WESTON for EPA Reference Method 3A analysis. This system generates a calibration curve, converts electronic signals into concentrations, and provides one-minute averages during the sample run and an average concentration over the duration of the sample run.

Quality Control

At the time of analysis, O_2 and CO_2 in nitrogen calibration gases certified according to EPA Protocol-1, are used to calibrate the analyzer and to determine a bias correction factor for the entire system bias in accordance with EPA Reference Method 3A. The calibration gases are introduced directly to the analyzer to generate the calibration curve. A zero gas and an upscale calibration gas is introduced at the probe and recovered through the sampling and analytical system. A bias correction factor is calculated using the ratio of the concentration measured from the sampling system and concentration measured directly at the analyzer. Sample run averages are corrected for system bias results.

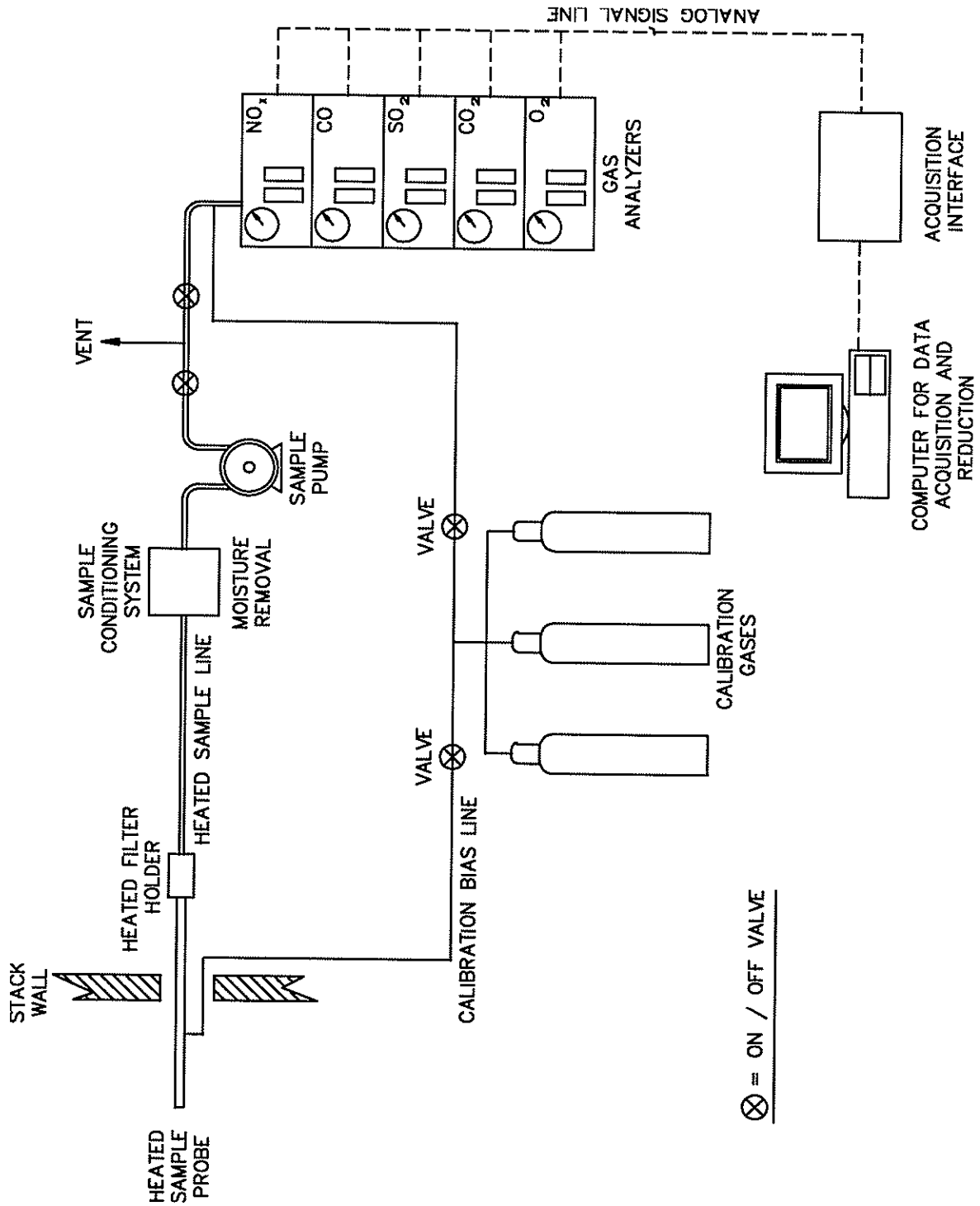

Figure B-1 Continuous Emission Monitoring System

B.3 PARTICULATE MATTER

Particulate matter (PM) emission testing is conducted using EPA Reference Method 5. EPA Reference Methods 1-4 are used, as appropriate, for traverse point selection, determination of stack gas molecular weight, stack gas moisture determination, and volumetric flow rate.

Sampling Equipment and Procedures

The sampling train utilized to perform the PM sampling is an EPA Reference Method 5 train manufactured by Graseby-Nutech, Graseby-Anderson, or Apex Instruments (see Figure B-2). A measured borosilicate, quartz glass, or stainless steel (316) nozzle is attached to a heated (248 ± 25 °F) borosilicate or quartz glass, or stainless steel probe of appropriate length. The probe is connected to a heated (248 ± 25 °F) borosilicate glass filter holder containing a 9-cm glass fiber filter (preweighed to a constant 0.1 mg weight). The first and second impingers each contain 100 mL of distilled water, the third impinger is empty, and the fourth impinger contains 200 to 300 grams of dry preweighed silica gel. The second impinger is a standard Greenburg-Smith type. The first, third, and fourth impingers are of a modified design. All impingers are maintained in a crushed ice bath. A gas measuring control console with a leak-free vacuum pump, a calibrated dry gas meter, a calibrated orifice, and inclined manometers are connected to the final impinger, probe, heated filter holder, and pitot tube via an umbilical cord to complete the train.

Flue gas velocity is measured with a calibrated S-type pitot tube (provided with extensions) fastened alongside the sampling nozzle. Flue gas temperature is monitored with a calibrated direct readout pyrometer equipped with a chromel-alumel (Type K) thermocouple positioned near the sampling nozzle. The probe, filter box, and impinger exit gas temperatures are monitored with a calibrated direct readout pyrometer equipped with Type K thermocouples positioned in the probe, heated filter chamber, and in the sample gas stream after the last impinger. Stack gas stream composition (carbon dioxide and oxygen content) is determined as previously described. The sampling rate is adjusted, based on stack velocity, at each point to ensure the sample is collected isokinetically.

At the conclusion of each test, the sampling train is leak checked. Upon completion of a successful leak check, the sampling train is dismantled, openings are sealed, and the components recovered as described below.

- The glass fiber filter(s) is/are removed from its holder with tweezers and placed in its original container, along with any particulate and filter fragments (Sample Fraction 1).

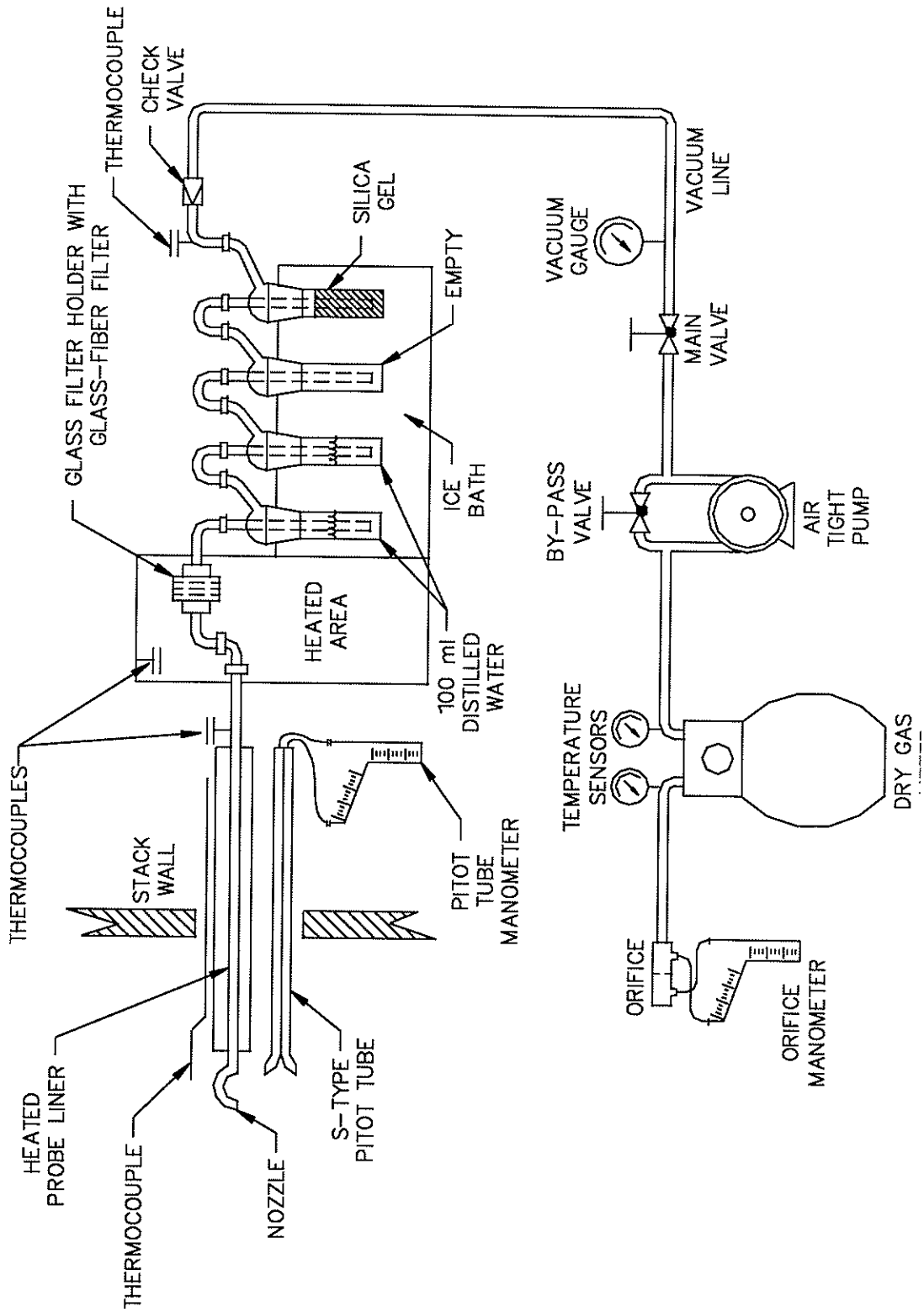

Figure B-2 EPA Reference Method 5 Sampling Train

- The probe and nozzle are separated and the particulate rinsed with distilled water or acetone into a polyethylene container while brushing a minimum of three times. Particulate adhering to the brush is rinsed with the appropriate solvent into the same container. The front half of the filter holder and connecting glassware are also rinsed. These rinses are combined (Sample Fraction 2).

- The total liquid content of impingers one, two, and three are measured volumetrically for stack gas moisture content calculation. This liquid is discarded.

- The silica gel is removed from the last impinger and immediately weighed to the nearest 0.1 g for stack gas moisture content calculation.

- Aliquots of the appropriate solvents and a filter are retained for blank analyses.

Each sample bottle is labeled to clearly identify its contents. The liquid level is marked on each bottle. The samples are then secured for transport to a laboratory for analysis. Sample integrity is assured by maintaining chain-of-custody records.

Sample Analysis

The particulate analysis proceeds as follows:

- The sample filters (Sample Fraction 1) and blank filter are desiccated for 24 hours and weighed to the nearest 0.1 mg to constant (± 0.5 mg) weight.

- The nozzle, probe, and front half of the filter holder wash samples (Sample Fraction 2), along with the solvent blank, are evaporated in tared beakers, then desiccated and weighed to the nearest 0.1 mg to constant (± 0.5 mg) weights.

The total weight of material measured in the front half wash in addition to the weight of material collected on the glass fiber filter represent the total PM catch for each train. Blank corrections are made where appropriate for all sample weights.

Data Acquisition and Reduction

Data are recorded at the time of collection on preprinted data sheets. Calculations are performed with preprogrammed calculators or spreadsheet software. Data transfers are minimized. Field and laboratory data sheets are be checked for completeness and accuracy. Calculations are verified by a second person.

Quality Control

Dry gas meters are calibrated before and after sampling. Thermocouples are calibrated against mercury thermometers, and aneroid barometers are calibrated against a mercury barometer. WESTON participated satisfactorily in the most recent dry gas meter audit supplied by the EPA. Those data are on file at WESTON.

Prior to and following each run, the sampling train is leak checked. An acceptable leak rate does not exceed the lesser of 0.02 actual cubic feet per minute (acfm) or 4% of the actual sampling rate. The isokinetic sampling rate is calculated at the completion of each sample run. If the isokinetic sampling rate is not within 100% ± 10%, the sample run is repeated.

Samples are transported to the laboratory under chain-of-custody. Solvent blanks and filter blanks are analyzed at the same time as the samples. The mass collected on the filters and the mass in the probe wash are corrected by the blank measurements.

WESTON uses Class S weights during each stage of the analysis to verify the accuracy of the balance. The balance is repaired and recalibrated before proceeding if there is a significant difference in the actual mass and measured mass.

B.4 TOTAL REDUCED SULFUR

Total reduced sulfur testing is performed using the procedures described in EPA Reference Method 16. When TRS data must be oxygen corrected, EPA Reference Method 3 using an Orsat analyzer, is performed on an integrated bag sample to measure oxygen concentration.

Sampling Equipment and Procedures

Figure B-3 illustrates the sampling system. A Teflon®-lined, stainless steel probe of sufficient length to monitor the gas stream (without wall effects) is used to extract a gas sample from the emission source. The probe tip is directed away from stack gas flow to minimize particulate and moisture entrainment. The probe is connected directly to the recovery gas line and sample conditioning system.

The sample conditioning system consists of a Teflon® impinger containing 1.5M citrate buffer, adjusted to a pH of 5.4 to 5.8, maintained in an ice bath. Moisture is condensed in the impingers, yielding a dry sample and thus eliminating the need for heated sample lines. Even though the impinger set traps entrained particulate matter, very fine particulate matter is removed by a Balston® AQ Microfiber filter installed at the impinger outlet.

An unheated nylon line is connected from the filter to the sample pump inlet. Sample line length and connections are minimized to reduce surface adsorption of TRS and the possibility of leaks.

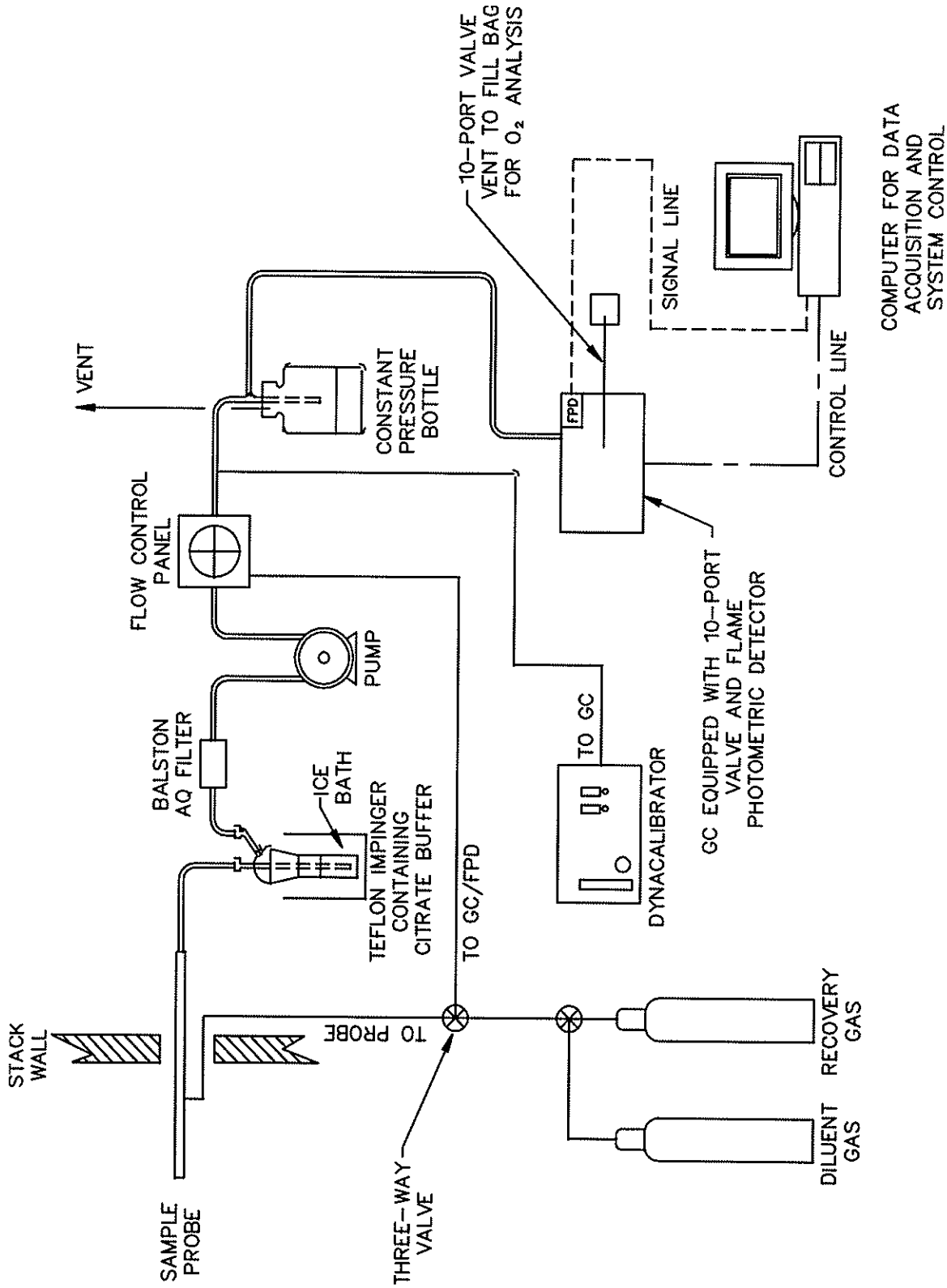

Figure B-3 EPA Reference Method 16 Sampling and Analytical Train

The pump outlet is connected directly to a constant pressure bottle. At this point, a major portion of the sample is vented to the atmosphere, and the remainder is used to charge the gas chromatograph (GC) sample loop. The GC sample loop outlet is connected to a Tedlar® gas collection bag gas sample collection and subsequent analysis using an Orsat apparatus.

Sample Analysis

Separation of hydrogen sulfide (H_2S), methyl mercaptan (MeSH), dimethyl sulfide (DMS), and dimethyl disulfide (DMDS) is accomplished by gas chromatography on a SPB1 Capillary column. After resolution of H_2S, MeSH, and DMS, the Capillary column is backflushed to achieve resolution of DMDS within 2-3 minutes from sample injection. The gas chromatograph is operated on periodic cycle to produce a minimum of ten injections per hour.

Detection of reduced sulfur compounds is accomplished with a flame photometric detector (FPD). The FPD response is calibrated before and after every three hours of testing, using gas phase standards prepared from gravimetrically certified permeation devices.

Data Acquisition and Reduction

The FPD responses are recorded by an IBM compatible computer equipped with software designed by WESTON for reduced sulfur compound analysis. The software controls the timing of the gas-chromatographic cycle, integrates and records peaks, performs calculations, and prints the results. Calibration curves are generated by the software using log-log linear least squares best fit of the data.

Quality Control

Permeation devices certified by the vendor are used to calibrate the FPD response. The temperature of the devices is maintained at a constant value (as certified by vendor) to ensure a constant, accurate permeation rate. The temperature of the permeation chamber is verified at the time of sampling with an National Institute of Standards and Technology (NIST) traceable mercury-in-glass thermometer. The temperature of the permeation chamber is maintained at 50.0 ± 0.1 °C throughout the sampling.

VICI-Metronics, Santa Clara, California, supplied the permeation devices for the testing. The devices are gravimetrically analyzed to measure the emission rate before shipment.

Various concentrations of the permeants are generated by varying the flow of the diluent gas stream over the devices. A calibration curve is constructed of at least three concentrations of each permeant; three successive injections at each concentration yield peak areas that differ from the mean peak area value by less than 5%.

Sampling system integrity is evaluated after every three hours of sampling by injecting a low concentration of H_2S at the probe tip and recovering the sample through the sample conditioning and sample transport subsystems. The same gas stream is then introduced directly to the GC sample loop. The ratio of concentrations corresponds to the system correction factor. This factor is then used to adjust measured reduced sulfur compound concentrations.

A system audit gas (of appropriate H_2S concentration) is used to evaluate the analytical system integrity each test day. Audit gas results will be within 10% of the certified cylinder concentration.

APPENDIX C
FIELD DATA – NO. 2 RECOVERY FURNACE

PARTICULATE MATTER

ISOKINETIC CALCULATIONS

Run Number		1	2	3	Mean
Date		7/20/06	7/20/06	7/20/06	---
Time Began		830	1037	1326	---
Time Ended		939	1145	1437	---
INPUT DATA					
Sampling Time, min	(Theta)	64.0	64	64	64
Stack Diameter, in.	(Dia.)	114.75	114.75	114.75	114.75
Barometric Pressure, in. Hg	(Pb)	29.47	29.47	29.47	29.47
Static Pressure, in. H2O	(Pg)	-0.62	-0.62	-0.62	-0.62
Pitot Tube Coefficient	(Cp)	0.84	0.84	0.84	0.84
Meter Correction Factor	(Y)	0.9920	0.9920	0.9920	0.9920
Orifice Calibration Value	(Delta H@)	1.6830	1.6830	1.6830	1.6830
Nozzle Diameter, in.	(Dn)	0.275	0.275	0.275	0.275
Meter Volume, ft^3	(Vm)	44.808	45.268	43.840	44.639
Meter Temperature, °F	(Tm)	88.6	99.6	105.6	97.9
Meter Temperature, °R	(Tm-R)	548.6	559.6	565.6	557.9
Meter Orifice Pressure, in. H2O	(Delta H)	1.538	1.536	1.391	1.488
Ave Sq Rt Orifice Press, (in. H2O)^½	((Delta H)½)avg)	1.236	1.237	1.178	1.217
Volume H2O Collected, mL	(Vlc)	314.6	297.4	296.7	302.9
CO2 Concentration, %	(CO2)	13.0	12.7	13.1	12.9
O2 Concentration, %	(O2)	6.6	6.9	6.5	6.7
Ave Sq Rt Velo Head, (in. H2O)^½	((Delta P)½)avg)	0.812	0.814	0.767	0.798
Stack Temperature, °F	(Ts)	380.4	384.5	378.9	381.3
Stack Temperature, °R	(Ts-R)	840.4	844.5	838.9	841.3
Particulate Collected, g	(Mn)	0.0172	0.0135	0.0093	0.0133
Moisture Fraction (at Saturation)	(BWS)	NA	NA	NA	NA
Production Rate, ADTP/hr	(Pr)	25	25	25	25
CALCULATED DATA					
Nozzle Area, ft^2	(An)	4.12E-04	4.12E-04	4.12E-04	4.12E-04
Stack Area, ft^2	(As)	71.82	71.82	71.82	71.82
Stack Pressure, in. Hg	(Ps)	29.42	29.42	29.42	29.42
Meter Pressure, in. Hg	(Pm)	29.58	29.58	29.57	29.58
Standard Meter Volume, ft^3	(Vmstd)	42.280	41.879	40.110	41.423
Standard Water Volume, ft^3	(Vwstd)	14.808	13.999	13.966	14.258
Moisture Fraction (Measured)	(BWS)	0.259	0.251	0.258	0.256
Moisture Fraction (lower sat/meas)	(BWS)	0.259	0.251	0.258	0.256
Mol. Wt. of Dry Gas, lb/lb-mole	(Md)	30.34	30.31	30.36	30.34
Mol. Wt. of Stack Gas, lb/lb-mole	(Ms)	27.14	27.22	27.16	27.18
Average Stack Gas Velocity, ft/sec	(Vs)	59.80	59.98	56.46	58.75
Stack Gas Flow, actual, ft^3/min	(Qa)	257689	258465	243275	253143
Stack Gas Flow, Std , ft^3/min	(Qs)	117870	119060	111646	116192
Isokinetic Sampling Rate, %	(%I)	97.6	95.7	97.8	97.0
Particulate Conc @ Std Cond, gr/ft^3	(Cs)	0.0063	0.0050	0.0036	0.0049
Particulate Conc @ 8 or 10% O_2, gr/ft^3 8	(Cs@8 or 10%O2)	0.0057	0.0046	0.0032	0.0045
Particulate Emission, lb/hr	(PMR)	6.3	5.1	3.4	4.9
Particulate Emission Rate, lb/ADTP	(ER)	0.2536	0.2030	0.1369	0.1979
Calibration check	(Yqa)	1.0231	1.0244	1.0122	1.020
Percent difference from Y					2.81%

CZ 8097

ISOKINETIC FIELD DATA SHEET

5

Page 1 of 1

		Stack Conditions	Assumed	Actual							
Client	Bowater				Meter Box ID	A01					
W.O.#	03917.008.007				Meter Box Y	.992				K Factor 2.32	
Project ID		% Moisture	25		Meter Box Del H	1.683		**Leak Checks**	Initial	Mid-Point	Final
Mode/Source ID	#2 Rec	Impinger Vol (ml)		306	Probe ID / Length	PR97 10		Sample Train (ft³)	.012		0.010
Samp. Loc. ID	Catawba, SC	Silica gel (g)		8.6	Probe Material	SS		Leak Check @ (in Hg)	11		9
Run No.ID	1	CO2, % by Vol	14		Pitot / Thermocouple ID	P160		Pitot good	yes / no	yes / no	yes / no
Test Method ID	5	O2, % by Vol	5.5		Pitot Coefficient	0.84		Orsat good	yes / no	yes / no	yes / no
Date ID	~~20~~ ~~19~~ JUL	Temperature (°F)	385		Nozzle ID	AON 275		**Temp Check**	Pre-Test Set		Post-Test Set
Source/Location	No. 2 Recovery Boiler Stack	Meter Temp (°F)			Avg Nozzle Dia (in)	.275		Meter Box Temp			
Sample Date	20 ~~19~~ Jul-06	Static Press (in H_2O)	.62		Area of Stack (ft²)	71.82		Reference Temp			
Baro. Press (in Hg)	29.47				Sample Time	64		Pass/Fail (+/- 2°)	Pass / Fail		Pass / Fail
Operator	Bill / JW	Ambient Temp (°F)			Total Traverse Pts	16		Temp Change Response ?	yes / no		yes / no

													EXIT	
	0	0830			757.857									
A 1	4		0.75	1.74	760.9	378	80	X	235	272	60	4	233	
2	8		0.80	1.86	763.8	378	81		249	260	49	4	259	
3	12		0.74	1.72	766.7	380	83		266	261	47	5	270	
4	16		0.71	1.65	769.5	380	83		242	241	49	5	270	
5	20		0.63	1.46	772.2	379	84		235	238	50	5	260	
6	24		0.63	1.44	774.9	381	85		236	238	52	5	250	
7	28		.56	1.29	777.5	380	87		235	237	52	5	242	
8	32		.45	1.04	779.9	378	88		230	237	53	5	234	
B 1	36		.72	1.67	782.8	380	89		236	238	56	5	225	
2	40		.73	1.69	785.7	381	91		239	237	52	5	246	
3	44		.76	1.76	788.8	381	92		240	238	52	5	259	
4	48		.71	1.64	791.7	382	94		238	237	54	5	259	
5	52		.67	1.55	794.5	382	94		236	239	56	5	254	
6	56		.69	1.60	797.4	382	95		236	238	56	5	248	
7	60		.66	1.53	800.3	382	96		235	239	58	5	243	
8	64	0939	.41	~~.46~~ .45	802.665	382	96		233	237	58	4	236	

Avg Sqrt Delta P	Avg Delta H	Total Volume	Avg Ts	Avg Tm	Min/Max	Min/Max	Max Temp	Max Vac	Max Temp
0.8118	1.5381	44.808	380.4	88.63					
.6638	Avg Sqrt Del H 1.2358	Comments:							

Iso 97
Mod 25.9

N/A

WESTON MANAGERS DESIGNERS/CONSULTANTS

CZ 8098

ISOKINETIC FIELD DATA SHEET

5

Page 1 of 1

			Stack Conditions								
Client	Bowater		Assumed	Actual	Meter Box ID	A01			K Factor 2.32		
W.O.#	03917.008.007				Meter Box Y	.992					
Project ID		% Moisture	25		Meter Box Del H	1.683		Leak Checks	Initial	Mid-Point	Final
Mode/Source ID	#2 RB	Impinger Vol (ml)		256	Probe ID / Length	PR97 10		Sample Train (ft³)	0.010		.018
Samp. Loc. ID	Catawba, SC.	Silica gel (g)		11.4	Probe Material	SS		Leak Check @ (in Hg)	10		9
Run No.ID	2	CO2, % by Vol	14		Pitot / Thermocouple ID	P16c		Pitot good	yes / no	yes / no	yes / no
Test Method ID	5	O2, % by Vol	5.5		Pitot Coefficient	0.84		Orsat good	yes / no	yes / no	yes / no
Date ID	19JUL	Temperature (°F)	380		Nozzle ID	AVN 275		Temp Check	Pre-Test Set		Post-Test Set
Source/Location	No. 2 Recovery Boiler Stack	Meter Temp (°F)			Avg Nozzle Dia (in)	.275		Meter Box Temp			
Sample Date	19-Jul-06	Static Press (in H_2O)	-.62		Area of Stack (ft²)	71.82		Reference Temp			
Baro. Press (in Hg)	29.47				Sample Time	64		Pass/Fail (+/- 2°)	Pass / Fail		Pass / Fail
Operator	BM / JH	Ambient Temp (°F)			Total Traverse Pts	16		Temp Change Response ?	yes / no		yes / no

													EXIT	
	0	1037			804.100									
A 1	4		0.78	1.81	807.2	382	94	X	248	268	64	5	230	
2	8		0.78	1.81	810.3	382	95		252	260	58	5	237	
3	12		0.77	1.78	813.3	382	97		250	257	56	5	257	
4	16		0.75	1.74	816.4	383	98		249	254	57	5	262	
5	20		0.74	1.71	819.3	384	98		249	258	56	5	263	
6	24		0.62	1.43	822.1	384	99		249	256	56	5	259	
7	28		0.60	1.39	824.8	384	99		245	256	56	5	253	
8	32		0.62	1.43	827.6	384	100		244	255	56	5	249	
B 1	36		0.62	1.43	830.3	385	100		244	256	61	5	239	
2	40		0.60	1.39	832.9	386	101		247	256	55	5	245	
3	44		0.65	1.50	835.6	386	101		244	255	54	5	259	
4	48		0.62	1.43	838.3	386	102		244	256	55	5	262	
5	52		0.62	1.43	841.0	387	102		245	263	55	5	262	
6	56		0.68	1.57	843.8	387	102		244	260	56	5	257	
7	60		0.70	1.62	846.6	386	102		242	258	56	5	250	
8	64	1145	0.48	1.11	849.368	384	103		242	255	57	5	244	
			Avg Sqrt Delta P	Avg Delta H	Total Volume	Avg Ts	Avg Tm		Min/Max	Min/Max	Max Temp	Max Vac	Max Temp	
			0.8135	1.5363	45.268	334.5	99.56							
			0.6644	Avg Sqrt Del H 1.2371	Comments:									

150 95.9
Moist 25.0

WESTON MANAGERS DESIGNERS/CONSULTANTS

C-3

CZ 7689

ISOKINETIC FIELD DATA SHEET

5

Page 1 of 1

			Stack Conditions								
Client	Bowater		Assumed	Actual	Meter Box ID	A01			K Factor	2.36	
W.O.#	03917.008.007				Meter Box Y	992					
Project ID		% Moisture	25		Meter Box Del H	1.683		**Leak Checks**	Initial	Mid-Point	Final
Mode/Source ID	#2 RB	Impinger Vol (ml)		284	Probe ID / Length	PR97	10	Sample Train (ft³)	0.014		0.012
Samp. Loc. ID	Catawba, SC	Silica gel (g)		12.7	Probe Material	S	SS	Leak Check @ (in Hg)	8		7
Run No.ID	3	CO2, % by Vol	14		Pitot / Thermocouple ID	P160		Pitot good	~~yes~~ / no	yes / no	~~yes~~ / no
Test Method ID	5	O2, % by Vol	5.5		Pitot Coefficient	0.84		Orsat good	~~yes~~ / no	yes / no	~~yes~~ / no
Date ID	19JUL	Temperature (°F)			Nozzle ID	AUN.275		**Temp Check**	Pre-Test Set		Post-Test Set
Source/Location	No. 2 Recovery Boiler Stack	Meter Temp (°F)			Avg Nozzle Dia (in)	0.275		Meter Box Temp			
Sample Date	19-Jul-06	Static Press (in H_2O)	-.62		Area of Stack (ft²)	71.82		Reference Temp			
Baro. Press (in Hg)	29.47				Sample Time	64		Pass/Fail (+/- 2°)	Pass / Fail		Pass / Fail
Operator	BMJH	Ambient Temp (°F)			Total Traverse Pts	16		Temp Change Response ?	yes / no		yes / no

TRAVERSE POINT NO.	SAMPLE TIME (min)	CLOCK TIME (plant time)	VELOCITY PRESSURE Delta P (in H2O)	ORIFICE PRESSURE Delta H (in H2O)	DRY GAS METER READING (ft³)	STACK TEMP (°F)	DGM INLET TEMP (°F)	DGM OUTLET TEMP (°F)	PROBE TEMP (°F)	FILTER BOX TEMP (F)	IMPINGER EXIT TEMP (°F)	SAMPLE TRAIN VAC (in Hg)	EXIT	COMMENTS
	0	1326			852.524									
B 1	4		0.62	1.46	855.2	382	101	X	231	253	65	4	232	
2	8		0.62	1.46	857.8	380	101		246	246	62	4	237	
3	12		0.64	1.51	860.7	381	102		235	265	59	5	238	
4	16		0.71	1.68	863.5	381	103		236	258	60	5	236	
5	20		0.63	1.49	866.5	382	104		235	251	62	5	237	
6	24		0.61	1.44	869.2	381	105		233	247	64	5	235	
7	28		0.58	1.34	872.0	380	105		230	250	63	4	236	
8	32		0.52	1.23	874.7	379	105		230	250	61	4	235	
A 1	36		0.59	1.39	877.4	375	105		235	257	65	4	230	
2	40		0.59	1.39	880.1	377	106		245	253	63	4	234	
3	44		0.61	1.44	883.0	377	107		252	252	60	5	237	
4	48		0.59	1.39	885.7	377	109		240	249	61	5	235	
5	52		0.55	1.30	888.4	378	109		240	247	62	5	235	
6	56		0.55	1.30	891.0	377	109		240	249	63	5	236	
7	60		0.52	1.23	893.7	377	109		252	249	64	5	236	
8	64	1437	0.51	1.20	896.364	378	110		250	249	64	5	235	

Avg Sqrt Delta P	Avg Delta H	Total Volume	Avg Ts	Avg Tm	Min/Max	Min/Max	Max Temp	Max Vac	Max Temp
0.7674	1.3906	43.840	378.9	105.6					
0.5900	Avg Sqrt Del H 1.1782								

Comments:

150 97.9

MOIS 25.8

WESTON MANAGERS DESIGNERS/CONSULTANTS

SAMPLE RECOVERY FIELD DATA

5

Client: Bowater
Location/Plant: Catawba, SC
W.O. #: 03917.008.007
Source & Location: No. 2 Recovery Boiler Stack

Run No. 1 — Sample Date ~~19~~ 20-Jul-06 — Recovery Date 07/20/06

Sample I.D. Bowater - Catawba, SC - No. 2 Recovery Boiler - 1 - 5 - ´ Analyst BM — Filter Number 8097

	Impinger									
	1	2	3	4	5	6	7	Imp.Total	8	Total
Contents	Di H20	Di H20	Empty						Silica Gel	
Final	340	166						506	347.3	
Initial	100	100						200	338.7	
Gain	240	66						306	8.6	314.6

Impinger Color _____ Labeled? _____

Silica Gel Condition _____ Sealed? _____

Run No. 2 — Sample Date ~~19~~ 20-Jul-06 — Recovery Date 7/20/06

Sample I.D. Bowater - Catawba, SC - No. 2 Recovery Boiler - 2 - 5 - ´ Analyst BM — Filter Number 8098

	Impinger									
	1	2	3	4	5	6	7	Imp.Total	8	Total
Contents	Di H20	Di H20	Empty						Silica Gel	
Final	306	180						486	335.3	
Initial	100	100						200	323.9	
Gain	206	80						286	11.4	297.4

Impinger Color _____ Labeled? _____

Silica Gel Condition _____ Sealed? _____

Run No. 3 — Sample Date ~~19~~ 20-Jul-06 — Recovery Date 7/20/06

Sample I.D. Bowater - Catawba, SC - No. 2 Recovery Boiler - 3 - 5 - ´ Analyst BM — Filter Number CZ 7689 ~~8099~~ BM

	Impinger									
	1	2	3	4	5	6	7	Imp.Total	8	Total
Contents	Di H20	Di H20	Empty						Silica Gel	
Final	320	164						484	339.6	
Initial	100	100						200	326.9	
Gain	220	64						284	12.7	296.7

Impinger Color _____ Labeled? _____

Silica Gel Condition _____ Sealed? _____

Check COC for Sample IDs of Media Blanks

WESTON MANAGERS DESIGNERS/CONSULTANTS

NA

RUN DATA

Number 3

Client:	**Bowater**	Project Number:	**03917.008.007**
Location:	**Catawba, SC**	Operator:	**T. Simpkins**
Source:	**No. 3 Recovery**	Date:	**20 Jul 2006**
Calibration:	**1**		

Time	O2		CO2	
	mv	%	mv	%
Starting time 11:57				
No. 2 RF- PM Run 1				
11:57:46	2666	6.5	5196	13.0
11:58:16	2668	6.6	5197	13.0
11:58:46	2672	6.6	5190	13.0
11:59:16	2679	6.6	5185	13.0
11:59:46	2684	6.6	5181	13.0
Run Avg	**2674**	**6.6**	**5190**	**13.0**

RUN DATA

Number 9

Client:	**Bowater**	Project Number:	**03917.008.007**
Location:	**Catawba, SC**	Operator:	**T. Simpkins**
Source:	**No. ~~1~~ Recovery**	Date:	**20 Jul 2006**
Calibration:	**1**		

Time	O2		CO2	
	mv	%	mv	%
Starting time 15:56				
No. 2 RB- Run 2 PM				
15:56:50	2755	6.8	5089	12.7
15:57:20	2760	6.8	5091	12.7
15:57:50	2771	6.8	5082	12.7
15:58:20	2788	6.9	5066	12.7
15:58:50	2799	6.9	5054	12.6
15:59:20	2808	6.9	5044	12.6
Run Avg	**2780**	**6.9**	**5071**	**12.7**

RUN DATA

Number 8

Client:	**Bowater**	Project Number:	**03917.008.007**
Location:	**Catawba, SC**	Operator:	**T. Simpkins**
Source:	**No. 2 Recovery**	Date:	**20 Jul 2006**
Calibration:	**1**		

Time	O2		CO2	
	mv	%	mv	%
Starting time 15:51				
No. 2 RB- Run 3 PM				
15:52:19	2558	6.3	5301	13.3
15:52:49	2628	6.5	5228	13.1
15:53:19	2612	6.4	5249	13.1
15:53:49	2643	6.5	5217	13.1
15:54:19	2681	6.6	5181	13.0
15:54:49	2706	6.6	5157	12.9
Run Avg	**2638**	**6.5**	**5222**	**13.1**

CALIBRATION

Number 1

Client:	**Bowater**	Project Number:	**03917.008.007**
Location:	**Catawba, SC**	Operator:	**T. Simpkins**
Source:	**No. 3 Recovery**	Date:	**20 Jul 2006**

Starting Time: 10:37

O2

Method: EPA 3A

Calibration Type: Linear Regression

Calibration Results

%	Cylinder ID	Result, mv
Zero	-	88
10.1	CC92388	4050
20.4	SG880199NB	8149

Curve Coefficients

Slope	Intercept	Corr. Coeff.
395.2	78.2	>0.9999

CO2

Method: EPA 3A

Calibration Type: Linear Regression

Calibration Results

%	Cylinder ID	Result, mv
Zero	-	55
9.9	CC92388	3951
19.5	SG880199NB	7776

Curve Coefficients

Slope	Intercept	Corr. Coeff.
395.9	47.3	>0.9999

WESTON SOLUTIONS

CALIBRATION ERROR

Number 1

Client:	**Bowater**	Project Number:	**03917.008.007**
Location:	**Catawba, SC**	Operator:	**T. Simpkins**
Source:	**No. 3 Recovery**	Date:	**20 Jul 2006**

Starting Time: 10:37

O2

Method: EPA 3A

Slope 395.2 **Intercept** 78.2

Standard, %	**Response, mV**	**%**	**Error, %**
Zero	88	0.0	0.0
10.10	4050	10.1	0.0
20.4	8149	20.4	0.0

CO2

Method: EPA 3A

Slope 395.9 **Intercept** 47.3

Standard, %	**Response, mV**	**%**	**Error, %**
Zero	55	0.0	0.0
9.90	3951	9.9	0.0
19.5	7776	19.5	0.0

WESTON SOLUTIONS

ANALYZER INFORMATION

Client:	**Bowater**	Project Number:	**03917.008.007**
Location:	**Catawba, SC**	Operator:	**T. Simpkins**
Source:	**No. 3 Recovery**	Date:	**20 Jul 2006**

File Name: C:\Data\Bowater- Catawba, SC\Compliance 2006\No. 3 RB 072006 a.cem
Computer: WSAUB60 **Trailer:** 261

Analog Input Device: **Keithley KPCMCIA 16AI Card**

Channel 1

Analyte	**O2**
Method	**EPA 3A**, Using Bias
Analyzer Make & Model	**CA 300**
Full-Scale Output, mv	**10000**
Span Concentration, %	**25.0**

Channel 2

Analyte	**CO2**
Method	**EPA 3A**, Using Bias
Analyzer Make & Model	**CA 300**
Full-Scale Output, mv	**10000**
Span Concentration, %	**25.0**

WESTON SOLUTIONS

TOTAL REDUCED SULFUR

EMISSION CALCULATIONS

	Run 1	Run 2	Run 3	Mean
Date	7/20/06	7/20/06	7/20/06	---
Time Began	814	1133	1448	---
Time Ended	1111	1430	1745	---
Volumetric Flow Rate, (Qs), DSCFM	1.18E+05	1.15E+05	1.10E+05	1.14E+05
BWS	0.255	0.254	0.224	0.244
% Oxygen	6.1	6.4	6.2	6.2
Oxygen Reference Concentration, %	8.0	8.0	8.0	8.0
Production Rate, units/hr ton ADTP	25.00	25.00	25.00	25.00
Total Reduced Sulfur (TRS MW)= 34.08				
Concentration, ppm	1.67	2.27	2.29	2.08
Concentration, ppm @8%O2	1.46	2.02	2.01	1.83
Emission Rate, lb/hr	1.0	1.4	1.3	1.3
Emission Factor, lb/ton ADTP	0.042	0.056	0.053	0.050

Note: VFR for Run 1 is the average of runs 1 and 2 of the pm testing. TRS run 2 is the average of runs 2 and 3 of the pm testing. TRS run 3 is from an independent flow measurement.

ISOKINETIC CALCULATIONS

Run Number		1	2	3	Mean
Date		7/20/06	7/20/06	7/20/06	---
Time Began		830	1037	1326	---
Time Ended		939	1145	1437	---
INPUT DATA					
Sampling Time, min	(Theta)	64.0	64	64	64
Stack Diameter, in.	(Dia.)	114.75	114.75	114.75	114.75
Barometric Pressure, in. Hg	(Pb)	29.47	29.47	29.47	29.47
Static Pressure, in. H2O	(Pg)	-0.62	-0.62	-0.62	-0.62
Pitot Tube Coefficient	(Cp)	0.84	0.84	0.84	0.84
Meter Correction Factor	(Y)	0.9920	0.9920	0.9920	0.9920
Orifice Calibration Value	(Delta H@)	1.6830	1.6830	1.6830	1.6830
Nozzle Diameter, in.	(Dn)	0.275	0.275	0.275	0.275
Meter Volume, ft^3	(Vm)	44.808	45.268	43.840	44.639
Meter Temperature, °F	(Tm)	88.6	99.6	105.6	97.9
Meter Temperature, °R	(Tm-R)	548.6	559.6	565.6	557.9
Meter Orifice Pressure, in. H2O	(Delta H)	1.538	1.536	1.391	1.488
Ave Sq Rt Orifice Press, (in. H2O)^½	((Delta H)½)avg)	1.236	1.237	1.178	1.217
Volume H2O Collected, mL	(Vlc)	314.6	297.4	296.7	302.9
CO2 Concentration, %	(CO2)	13.0	12.7	13.1	12.9
O2 Concentration, %	(O2)	6.6	6.9	6.5	6.7
Ave Sq Rt Velo Head, (in. H2O)^½	((Delta P)½)avg)	0.812	0.814	0.767	0.798
Stack Temperature, °F	(Ts)	380.4	384.5	378.9	381.3
Stack Temperature, °R	(Ts-R)	840.4	844.5	838.9	841.3
Particulate Collected, g	(Mn)	0.0172	0.0135	0.0093	0.0133
Moisture Fraction (at Saturation)	(BWS)	NA	NA	NA	NA
Production Rate, ADTP/hr	(Pr)	25	25	25	25
CALCULATED DATA					
Nozzle Area, ft^2	(An)	4.12E-04	4.12E-04	4.12E-04	4.12E-04
Stack Area, ft^2	(As)	71.82	71.82	71.82	71.82
Stack Pressure, in. Hg	(Ps)	29.42	29.42	29.42	29.42
Meter Pressure, in. Hg	(Pm)	29.58	29.58	29.57	29.58
Standard Meter Volume, ft^3	(Vmstd)	42.280	41.879	40.110	41.423
Standard Water Volume, ft^3	(Vwstd)	14.808	13.999	13.966	14.258
Moisture Fraction (Measured)	(BWS)	0.259	0.251	0.258	0.256
Moisture Fraction (lower sat/meas)	(BWS)	0.259	0.251	0.258	0.256
Mol. Wt. of Dry Gas, lb/lb-mole	(Md)	30.34	30.31	30.36	30.34
Mol. Wt. of Stack Gas, lb/lb-mole	(Ms)	27.14	27.22	27.16	27.18
Average Stack Gas Velocity, ft/sec	(Vs)	59.80	59.98	56.46	58.75
Stack Gas Flow, actual, ft^3/min	(Qa)	257689	258465	243275	253143
Stack Gas Flow, Std , ft^3/min	(Qs)	117870	119060	111646	116192
Isokinetic Sampling Rate, %	(%I)	97.6	95.7	97.8	97.0
Particulate Conc @ Std Cond, gr/ft^3	(Cs)	0.0063	0.0050	0.0036	0.0049
Particulate Conc @ 8 or 10% O_2, gr/ft^3 8	(Cs@8 or 10%O2)	0.0057	0.0046	0.0032	0.0045
Particulate Emission, lb/hr	(PMR)	6.3	5.1	3.4	4.9
Particulate Emission Rate, lb/ADTP	(ER)	0.2536	0.2030	0.1369	0.1979
Calibration check	(Yqa)	1.0231	1.0244	1.0122	1.020
Percent difference from Y					2.81%

Bowater **03917.008.007**
Catawba, South Carolina **No. 2 Recovery Boiler**

VOLUMETRIC FLOW CALCULATIONS

Run Number	Run 1
Date	7/20/06
Time	1625
Volumetric Flow Data	
Velocity Head, in. H2O	
Point 1	0.53
Point 2	0.54
Point 3	0.58
Point 4	0.61
Point 5	0.56
Point 6	0.56
Point 7	0.57
Point 8	0.34
Point 9	0.62
Point 10	0.65
Point 11	0.62
Point 12	0.59
Point 13	0.49
Point 14	0.46
Point 15	0.44
Point 16	0.35
Square Root of Delta P, (in. H20)^½	0.726
Pitot Tube Coefficient (Cp)	0.84
Barometric Pressure (Pb), in. Hg	29.47
Static Pressure (Pg), in. H2O	-0.65
Stack Pressure (Ps), in. Hg	29.42
Stack Diameter (I.D.), in.	114.8
Stack Cross-sectional Area, ft^2	71.82
Stack Gas	
Temperature (ts), °F	380
Moisture (Bws)	0.224
CO2 Concentration (CO2), %	13.1
O2 Concentration (O2), %	6.2
Molecular Weight (Ms), lb/lb-mole	27.6
Velocity (Vs), ft/sec	53.1
Volumetric Flow Rate,	
At Stack Conditions (Qa), ACFM	228689
At Standard Conditions (Qs), DSCFM	**109661**

Unhide rows if more than

RUN SUMMARY

Number 1

Client:	**Bowater**	Project Number:	**03917.0**
Location:	**Catawba, SC**	Operator:	**T. Simpkins**
Source:	**No. 2 Recovery**	Date:	**20 Jul 2006**
Method:	**16** **Calibration Number** 1		

Start Time 08:14 **End Time** 11:11

Average Measured TRS Conc.	1.66	**ppm**
Recovery No. 2	99.6	**%**
TRS Corrected for Recovery	1.67	**ppm**
Oxygen Conc.	6.1	**%**
Oxygen Reference Conc.	8.0	**%**
Oxygen Correction Factor	0.872	
TRS Corrected for Oxygen	1.46	**ppm**

WESTON SOLUTIONS

RUN SUMMARY

Number 2

Client:	**Bowater**	Project Number:	**03917.0**
Location:	**Catawba, SC**	Operator:	**T. Simpkins**
Source:	**No. 2 Recovery**	Date:	**20 Jul 2006**
Method:	**16** **Calibration Number** 1		

Start Time 11:33 **End Time** 14:30

Average Measured TRS Conc.	2.25	**ppm**
Recovery No. 3	99.3	**%**
TRS Corrected for Recovery	2.27	**ppm**
Oxygen Conc.	6.4	**%**
Oxygen Reference Conc.	8.0	**%**
Oxygen Correction Factor	0.890	
TRS Corrected for Oxygen	2.02	**ppm**

RUN SUMMARY

Number 3

Client:	**Bowater**	Project Number:	**03917.0**
Location:	**Catawba, SC**	Operator:	**T. Simpkins**
Source:	**No. 2 Recovery**	Date:	**20 Jul 2006**
Method:	**16** **Calibration Number** 1		

Start Time 14:48 **End Time** 17:45

Average Measured TRS Conc.	2.28	**ppm**
Recovery No. 4	99.5	**%**
TRS Corrected for Recovery	2.29	**ppm**
Oxygen Conc.	6.2	**%**
Oxygen Reference Conc.	8.0	**%**
Oxygen Correction Factor	0.878	
TRS Corrected for Oxygen	2.01	**ppm**

WESTON SOLUTIONS

RUN SUMMARY

Number 4

Client:	**Bowater**	Project Number:	**03917.0**
Location:	**Catawba, SC**	Operator:	**T. Simpkins**
Source:	**No. 2 Recovery**	Date:	**20 Jul 2006**
Method:	**16** **Calibration Number** 2		

Start Time 19:08 **End Time** 19:13

Average Measured TRS Conc.	7.28	**ppm**
Recovery No. 4	99.5	**%**
TRS Corrected for Recovery	7.32	**ppm**
Oxygen Conc.	no data	
Oxygen Reference Conc.	8.0	**%**
Oxygen Correction Factor	-	
TRS Corrected for Oxygen	-	

WESTON SOLUTIONS

REDUCED SULFUR FIELD DATA

Run 1

Client: **Bowater**
Location: **Catawba, SC**
Source: **No. 2 Recovery**
Method: **16** **Calibration Number** 1

Project Number: **03917.0**
Operator: **T. Simpkins**
Date: **20 Jul 2006**

Time	H_2S		MeSH		DMS		DMDS		TRS
	area	ppm	area	ppm	area	ppm	area	ppm	ppm
08:14	32	0.97	6	0.37	<2	<0.24	9	0.31	1.95
08:18	81	1.49	6	0.38	14	0.60	<2	<0.15	2.47
08:21	21	0.78	20	0.66	7	0.44	<2	<0.15	1.89
08:24	75	1.44	35	0.86	<2	<0.24	7	0.28	2.86
08:28	7	0.46	5	0.35	<2	<0.24	<2	<0.15	0.81
08:31	39	1.06	<2	<0.22	<2	<0.24	<2	<0.15	1.06
08:34	8	0.51	3	0.25	<2	<0.24	<2	<0.15	0.75
08:37	73	1.42	6	0.38	5	0.36	<2	<0.15	2.17
08:41	103	1.68	17	0.60	<2	<0.24	<2	<0.15	2.28
08:44	414	3.22	8	0.42	<2	<0.24	17	0.42	4.47
08:47	693	4.10	5	0.36	3	0.27	<2	<0.15	4.73
08:50	135	1.90	3	0.28	<2	<0.24	<2	<0.15	2.18
08:54	674	4.05	6	0.38	<2	<0.24	<2	<0.15	4.42
08:57	87	1.54	3	0.26	<2	<0.24	<2	<0.15	1.81
09:00	48	1.17	<2	<0.22	<2	<0.24	<2	<0.15	1.17
09:04	29	0.92	16	0.60	3	0.29	4	0.21	2.23
09:07	8	0.49	<2	<0.22	13	0.59	<2	<0.15	1.08
09:10	8	0.51	7	0.40	<2	<0.24	5	0.23	1.38
09:13	9	0.54	4	0.32	<2	<0.24	<2	<0.15	0.86
09:17	3	0.32	2	0.22	<2	<0.24	<2	<0.15	0.55
09:20	36	1.02	<2	<0.22	<2	<0.24	<2	<0.15	1.02
09:23	32	0.97	<2	<0.22	<2	<0.24	<2	<0.15	0.97
09:27	27	0.89	<2	<0.22	6	0.41	<2	<0.15	1.31
09:30	29	0.92	4	0.29	8	0.46	<2	<0.15	1.66
09:33	24	0.84	6	0.39	<2	<0.24	<2	<0.15	1.22
09:36	31	0.95	<2	<0.22	<2	<0.24	<2	<0.15	0.95
09:40	26	0.87	<2	<0.22	<2	<0.24	<2	<0.15	0.87
09:43	35	1.00	<2	<0.22	<2	<0.24	<2	<0.15	1.00
09:46	33	0.98	7	0.41	<2	<0.24	<2	<0.15	1.39
09:49	44	1.12	<2	<0.22	<2	<0.24	<2	<0.15	1.12
09:53	27	0.88	7	0.41	<2	<0.24	16	0.41	2.12
09:56	35	1.01	3	0.26	10	0.52	<2	<0.15	1.78
09:59	33	0.98	10	0.48	<2	<0.24	<2	<0.15	1.46
10:03	27	0.90	18	0.63	<2	<0.24	<2	<0.15	1.52

WESTON SOLUTIONS

REDUCED SULFUR FIELD DATA

Run 1

Client: **Bowater**
Location: **Catawba, SC**
Source: **No. 2 Recovery**
Method: **16** **Calibration Number** 1

Project Number: **03917.0**
Operator: **T. Simpkins**
Date: **20 Jul 2006**

Time	H_2S		MeSH		DMS		DMDS		TRS
	area	ppm	area	ppm	area	ppm	area	ppm	ppm
10:06	27	0.89	18	0.63	<2	<0.24	<2	<0.15	1.52
10:09	24	0.84	4	0.32	13	0.59	<2	<0.15	1.75
10:12	28	0.90	6	0.37	7	0.43	<2	<0.15	1.70
10:16	44	1.12	<2	<0.22	<2	<0.24	<2	<0.15	1.12
10:19	38	1.05	6	0.36	<2	<0.24	<2	<0.15	1.41
10:22	24	0.85	12	0.52	<2	<0.24	<2	<0.15	1.36
10:26	30	0.93	4	0.32	<2	<0.24	<2	<0.15	1.25
10:29	32	0.97	8	0.42	<2	<0.24	<2	<0.15	1.39
10:32	27	0.90	<2	<0.22	<2	<0.24	12	0.35	1.60
10:35	34	0.99	3	0.28	<2	<0.24	<2	<0.15	1.27
10:39	30	0.94	2	0.24	<2	<0.24	<2	<0.15	1.18
10:42	37	1.03	5	0.33	<2	<0.24	11	0.35	2.06
10:45	32	0.97	<2	<0.22	14	0.62	<2	<0.15	1.59
10:48	35	1.00	4	0.29	17	0.68	<2	<0.15	1.98
10:52	25	0.86	9	0.46	18	0.68	<2	<0.15	2.00
10:55	31	0.95	6	0.36	<2	<0.24	<2	<0.15	1.31
10:58	34	0.99	<2	<0.22	18	0.70	<2	<0.15	1.69
11:02	26	0.88	<2	<0.22	7	0.44	<2	<0.15	1.32
11:05	30	0.94	<2	<0.22	<2	<0.24	<2	<0.15	0.94
11:08	51	1.21	<2	<0.22	16	0.66	<2	<0.15	1.87
Averages:		**1.13**		**0.27**		**0.16**		**0.05**	**1.66**

WESTON SOLUTIONS

REDUCED SULFUR FIELD DATA

Run 2

Client: **Bowater**
Location: **Catawba, SC**
Source: **No. 2 Recovery**
Method: **16** **Calibration Number** 1

Project Number: **03917.0**
Operator: **T. Simpkins**
Date: **20 Jul 2006**

Time	H_2S		MeSH		DMS		DMDS		TRS
	area	ppm	area	ppm	area	ppm	area	ppm	ppm
11:33	53	1.22	7	0.41	<2	<0.24	<2	<0.15	1.63
11:36	49	1.18	5	0.33	<2	<0.24	<2	<0.15	1.51
11:39	25	0.87	4	0.32	18	0.70	<2	<0.15	1.89
11:43	62	1.32	16	0.60	27	0.83	<2	<0.15	2.74
11:46	33	0.98	17	0.62	<2	<0.24	103	1.00	3.60
11:49	23	0.83	<2	<0.22	39	1.00	<2	<0.15	1.82
11:52	125	1.83	<2	<0.22	<2	<0.24	<2	<0.15	1.83
11:56	705	4.13	8	0.44	6	0.42	6	0.26	5.52
11:59	704	4.13	10	0.48	8	0.46	14	0.39	5.85
12:02	340	2.93	9	0.44	<2	<0.24	<2	<0.15	3.37
12:06	76	1.45	19	0.65	41	1.02	<2	<0.15	3.12
12:09	92	1.58	<2	<0.22	<2	<0.24	<2	<0.15	1.58
12:12	138	1.92	28	0.77	<2	<0.24	<2	<0.15	2.69
12:15	49	1.17	12	0.52	<2	<0.24	<2	<0.15	1.69
12:19	31	0.95	<2	<0.22	<2	<0.24	18	0.44	1.82
12:22	51	1.20	<2	<0.22	6	0.41	<2	<0.15	1.61
12:25	50	1.19	11	0.49	7	0.44	18	0.43	2.98
12:28	85	1.53	<2	<0.22	<2	<0.24	4	0.20	1.93
12:32	36	1.02	11	0.50	<2	<0.24	<2	<0.15	1.52
12:35	94	1.60	10	0.47	<2	<0.24	31	0.56	3.19
12:38	50	1.19	20	0.66	<2	<0.24	<2	<0.15	1.85
12:42	38	1.05	<2	<0.22	<2	<0.24	10	0.33	1.70
12:45	8	0.50	<2	<0.22	<2	<0.24	<2	<0.15	0.50
12:48	51	1.20	7	0.41	<2	<0.24	<2	<0.15	1.61
12:51	7	0.46	8	0.44	16	0.65	<2	<0.15	1.55
12:55	13	0.62	<2	<0.22	<2	<0.24	<2	<0.15	0.62
12:58	46	1.14	10	0.47	5	0.36	<2	<0.15	1.98
13:01	56	1.25	<2	<0.22	<2	<0.24	<2	<0.15	1.25
13:05	7	0.48	5	0.35	<2	<0.24	11	0.34	1.51
13:08	9	0.53	12	0.52	<2	<0.24	<2	<0.15	1.05
13:11	8	0.49	3	0.27	9	0.50	<2	<0.15	1.27
13:14	11	0.59	<2	<0.22	19	0.71	<2	<0.15	1.30
13:18	44	1.12	<2	<0.22	<2	<0.24	14	0.39	1.90
13:21	20	0.78	7	0.40	<2	<0.24	13	0.37	1.93

WESTON SOLUTIONS

REDUCED SULFUR FIELD DATA

Run 2

Client: **Bowater**
Location: **Catawba, SC**
Source: **No. 2 Recovery**
Method: **16** **Calibration Number** 1

Project Number: **03917.0**
Operator: **T. Simpkins**
Date: **20 Jul 2006**

Time	H_2S		MeSH		DMS		DMDS		TRS
	area	ppm	area	ppm	area	ppm	area	ppm	ppm
13:24	9	0.53	3	0.25	13	0.59	<2	<0.15	1.37
13:27	16	0.70	<2	<0.22	<2	<0.24	18	0.44	1.58
13:31	41	1.08	53	1.04	<2	<0.24	16	0.41	2.95
13:34	115	1.76	<2	<0.22	<2	<0.24	53	0.73	3.21
13:37	234	2.46	20	0.66	22	0.75	<2	<0.15	3.87
13:41	547	3.67	<2	<0.22	8	0.47	<2	<0.15	4.13
13:44	390	3.13	14	0.55	<2	<0.24	5	0.24	4.16
13:47	68	1.37	17	0.62	22	0.77	11	0.34	3.43
13:50	116	1.77	<2	<0.22	<2	<0.24	10	0.33	2.44
13:54	75	1.44	31	0.81	<2	<0.24	<2	<0.15	2.24
13:57	83	1.51	25	0.73	23	0.77	10	0.33	3.68
14:00	138	1.92	13	0.53	42	1.03	3	0.18	3.85
14:04	39	1.06	6	0.36	8	0.45	7	0.28	2.44
14:07	43	1.11	<2	<0.22	<2	<0.24	<2	<0.15	1.11
14:10	12	0.61	6	0.39	<2	<0.24	<2	<0.15	1.00
14:13	44	1.12	4	0.31	<2	<0.24	14	0.39	2.21
14:17	8	0.51	6	0.38	10	0.52	<2	<0.15	1.42
14:20	44	1.12	20	0.66	<2	<0.24	<2	<0.15	1.77
14:23	36	1.02	<2	<0.22	<2	<0.24	<2	<0.15	1.02
14:26	95	1.61	6	0.37	<2	<0.24	<2	<0.15	1.98
Averages:		**1.37**		**0.34**		**0.24**		**0.16**	**2.25**

WESTON SOLUTIONS

REDUCED SULFUR FIELD DATA

Run 3

Client: **Bowater**
Location: **Catawba, SC**
Source: **No. 2 Recovery**
Method: **16** **Calibration Number** 1

Project Number: **03917.0**
Operator: **T. Simpkins**
Date: **20 Jul 2006**

Time	H_2S		MeSH		DMS		DMDS		TRS
	area	ppm	area	ppm	area	ppm	area	ppm	ppm
14:48	47	1.16	7	0.41	<2	<0.24	<2	<0.15	1.57
14:52	11	0.58	6	0.36	<2	<0.24	11	0.34	1.61
14:55	76	1.45	4	0.32	<2	<0.24	<2	<0.15	1.77
14:58	39	1.05	16	0.60	<2	<0.24	<2	<0.15	1.65
15:01	46	1.14	95	1.38	<2	<0.24	15	0.39	3.31
15:05	8	0.51	10	0.46	<2	<0.24	3	0.19	1.35
15:08	45	1.13	19	0.64	<2	<0.24	17	0.43	2.63
15:11	27	0.88	<2	<0.22	<2	<0.24	<2	<0.15	0.88
15:14	41	1.09	16	0.60	<2	<0.24	2	0.16	2.01
15:18	13	0.63	<2	<0.22	<2	<0.24	4	0.21	1.05
15:21	42	1.10	37	0.88	<2	<0.24	<2	<0.15	1.98
15:24	94	1.60	8	0.42	<2	<0.24	<2	<0.15	2.02
15:28	19	0.76	7	0.39	14	0.61	<2	<0.15	1.76
15:31	12	0.60	<2	<0.22	<2	<0.24	<2	<0.15	0.60
15:34	55	1.25	3	0.29	<2	<0.24	5	0.23	2.00
15:37	65	1.34	31	0.81	<2	<0.24	<2	<0.15	2.15
15:41	250	2.54	10	0.47	<2	<0.24	7	0.27	3.54
15:44	160	2.06	20	0.65	12	0.57	<2	<0.15	3.27
15:47	41	1.08	5	0.34	7	0.45	<2	<0.15	1.87
15:51	82	1.50	7	0.40	<2	<0.24	9	0.31	2.51
15:54	58	1.28	16	0.60	<2	<0.24	6	0.27	2.40
15:57	67	1.36	15	0.57	<2	<0.24	<2	<0.15	1.93
16:00	268	2.62	8	0.44	8	0.46	<2	<0.15	3.51
16:04	128	1.85	10	0.48	6	0.40	<2	<0.15	2.74
16:07	79	1.48	5	0.35	5	0.36	<2	<0.15	2.19
16:10	58	1.28	<2	<0.22	<2	<0.24	<2	<0.15	1.28
16:13	124	1.82	7	0.40	<2	<0.24	<2	<0.15	2.23
16:17	180	2.17	5	0.36	9	0.50	5	0.23	3.49
16:20	39	1.06	9	0.44	<2	<0.24	<2	<0.15	1.50
16:23	46	1.15	6	0.38	<2	<0.24	<2	<0.15	1.53
16:27	517	3.57	7	0.39	5	0.36	10	0.33	4.97
16:30	29	0.92	9	0.44	<2	<0.24	<2	<0.15	1.36
16:33	72	1.41	7	0.40	16	0.65	<2	<0.15	2.46
16:36	45	1.13	7	0.41	<2	<0.24	<2	<0.15	1.54

WESTON SOLUTIONS

REDUCED SULFUR FIELD DATA

Run 3

Client: **Bowater**
Location: **Catawba, SC**
Source: **No. 2 Recovery**
Method: **16** **Calibration Number** 1

Project Number: **03917.0**
Operator: **T. Simpkins**
Date: **20 Jul 2006**

Time	H_2S		MeSH		DMS		DMDS		TRS
	area	ppm	area	ppm	area	ppm	area	ppm	ppm
16:40	64	1.33	16	0.59	<2	<0.24	<2	<0.15	1.93
16:43	62	1.31	<2	<0.22	18	0.69	<2	<0.15	2.00
16:46	25	0.86	7	0.39	<2	<0.24	5	0.25	1.74
16:50	181	2.18	109	1.47	<2	<0.24	8	0.30	4.25
16:53	44	1.12	5	0.34	<2	<0.24	7	0.27	2.00
16:56	45	1.14	<2	<0.22	<2	<0.24	<2	<0.15	1.14
16:59	101	1.65	8	0.42	<2	<0.24	30	0.55	3.18
17:03	103	1.67	6	0.36	<2	<0.24	<2	<0.15	2.03
17:06	85	1.52	91	1.35	9	0.50	20	0.46	4.30
17:09	23	0.83	6	0.37	12	0.57	8	0.29	2.36
17:12	101	1.66	10	0.48	<2	<0.24	<2	<0.15	2.14
17:16	18	0.74	5	0.33	<2	<0.24	<2	<0.15	1.07
17:19	15	0.66	12	0.52	<2	<0.24	<2	<0.15	1.19
17:22	49	1.18	<2	<0.22	<2	<0.24	<2	<0.15	1.18
17:26	20	0.76	14	0.56	4	0.33	<2	<0.15	1.66
17:29	73	1.42	5	0.34	<2	<0.24	16	0.41	2.59
17:32	111	1.73	7	0.41	18	0.69	<2	<0.15	2.83
17:35	122	1.81	10	0.47	7	0.45	<2	<0.15	2.73
17:39	885	4.60	16	0.59	4	0.33	<2	<0.15	5.52
17:42	611	3.86	8	0.43	8	0.48	<2	<0.15	4.77
Averages:		**1.46**		**0.45**		**0.16**		**0.11**	**2.28**

WESTON SOLUTIONS

REDUCED SULFUR FIELD DATA

Run 4

Client: **Bowater**
Location: **Catawba, SC**
Source: **No. 2 Recovery**
Method: **16** **Calibration Number** 2

Project Number: **03917.0**
Operator: **T. Simpkins**
Date: **20 Jul 2006**

Time	H_2S		MeSH		DMS		DMDS		TRS
	area	ppm	area	ppm	area	ppm	area	ppm	ppm
				7.5 ppm CC200859 H2S Audit Gas					
19:08	2505	7.27	<2	<0.19	<2	<0.22	<2	<0.14	7.27
19:10	2513	7.28	<2	<0.19	<2	<0.22	<2	<0.14	7.28
Averages:		**7.28**		-		-		-	**7.28**

WESTON SOLUTIONS

RECOVERY DATA

Number 1

Client: **Bowater**
Location: **Catawba, SC**
Source: **No. 2 Recovery**
Method: **16**

Project Number: **03917.0**
Operator: **T. Simpkins**
Date: **20 Jul 2006**

Calibration Number 1 **Before Run** 1
Start Time 07:49 **End Time** 08:10

Recovery was run using H_2S

Recovery Gas to Probe, Time: 07:49

Peak Areas, mv-sec			Average	ppm
2380	2430	2439	2416	7.38

Recovery Gas to GC, Time: 08:05

Peak Areas, mv-sec			Average	ppm
2447	2457	2441	2449	7.42

Recovery 99.4%

WESTON SOLUTIONS

RECOVERY DATA

Number 2

Client: **Bowater**
Location: **Catawba, SC**
Source: **No. 2 Recovery**
Method: **16**

Project Number: **03917.0**
Operator: **T. Simpkins**
Date: **20 Jul 2006**

Calibration Number 1 **After Run** 1 **Before Run** 2
Start Time 11:12 **End Time** 11:32

Recovery was run using H_2S

Recovery Gas to Probe, Time: 11:12

Peak Areas, mv-sec			Average	ppm
2361	2373	2384	2373	7.31

Recovery Gas to GC, Time: 11:29

Peak Areas, mv-sec			Average	ppm
2358	2399	2421	2393	7.34

Recovery 99.6%

WESTON SOLUTIONS

RECOVERY DATA

Number 3

Client: **Bowater**
Location: **Catawba, SC**
Source: **No. 2 Recovery**
Method: **16**

Project Number: **03917.0**
Operator: **T. Simpkins**
Date: **20 Jul 2006**

Calibration Number 1 **After Run** 2 **Before Run** 3
Start Time 14:30 **End Time** 14:46

Recovery was run using H_2S

Recovery Gas to Probe, Time: 14:30

Peak Areas, mv-sec			Average	ppm
2370	2368	2389	2376	7.32

Recovery Gas to GC, Time: 14:42

Peak Areas, mv-sec			Average	ppm
2420	2409	2400	2410	7.37

Recovery 99.3%

WESTON SOLUTIONS

RECOVERY DATA

Number 4

Client: **Bowater**
Location: **Catawba, SC**
Source: **No. 2 Recovery**
Method: **16**

Project Number: **03917.0**
Operator: **T. Simpkins**
Date: **20 Jul 2006**

Calibration Number 1 **After Run** 3 **Before Run** 4
Start Time 17:45 **End Time** 18:09

Recovery was run using H_2S

Recovery Gas to Probe, Time: 17:45

Peak Areas, mv-sec			Average	ppm
2446	2466	2465	2459	7.44

Recovery Gas to GC, Time: 18:04

Peak Areas, mv-sec			Average	ppm
2476	2485	2494	2485	7.47

Recovery 99.5%

WESTON SOLUTIONS

CALIBRATION DATA

Number 1

Client: **Bowater**
Location: **Catawba, SC**
Source: **No. 2 Recovery**
Method: **16**

Project Number: **03917.0**
Operator: **T. Simpkins**
Date: **20 Jul 2006**

Ambient Temp 72°F **Baro. Press.** 29.41 in. Hg

Compound	**H_2S**	**MeSH**	**DMS**	**DMDS**
Perm. Device ID	T-20471	33-17281	89-20194	89-20197
Perm. Rate, nL/min	456	403	342	259
Ret. Time, sec	27.4	44.1	77.9	135.9
1 Flow 100 **mL/min**	**4.56** ppm	**4.03** ppm	**3.42** ppm	**2.59** ppm
Time: 07:33		**Peak Areas, mv-sec**		
	873	928	519	763
	873	914	514	736
	872	897	522	766
Average Area	**872**	**913**	**518**	**755**
2 Flow 51.6 **mL/min**	**8.84** ppm	**7.81** ppm	**6.62** ppm	**5.03** ppm
Time: 07:12		**Peak Areas, mv-sec**		
	3522	3666	2051	2993
	3527	3657	2050	3039
	3549	3695	2061	3028
Average Area	**3533**	**3673**	**2054**	**3020**
3 Flow 27.3 **mL/min**	**16.7** ppm	**14.8** ppm	**12.5** ppm	**9.51** ppm
Time: 06:01		**Peak Areas, mv-sec**		
	13791	14045	7856	11414
	13734	14098	7894	11518
	13827	14141	7910	11339
Average Area	**13784**	**14095**	**7887**	**11423**

WESTON SOLUTIONS

CALIBRATION SUMMARY

Number 1

Client: **Bowater**
Location: **Catawba, SC**
Source: **No. 2 Recovery**
Method: **16**

Project Number: **03917.0**
Operator: **T. Simpkins**
Date: **20 Jul 2006**

H_2S	1	2	3		
Time	07:33	07:12	06:01		
Conc.	4.56	8.84	16.7		
Response	872	3533	13784		
Calc. Conc.	4.57	8.82	16.7		
% Error	+0.1	-0.3	+0.1		
Calibration Curve:	Slope	Intercept	Corr Coeff	Min Area	Det Lim
	2.1257	1.5384	>0.9999	2	0.26

MeSH	1	2	3		
Time	07:33	07:12	06:01		
Conc.	4.03	7.81	14.8		
Response	913	3673	14095		
Calc. Conc.	4.03	7.81	14.8		
% Error	+0.0	-0.1	+0.0		
Calibration Curve:	Slope	Intercept	Corr Coeff	Min Area	Det Lim
	2.1081	1.6838	>0.9999	2	0.22

DMS	1	2	3		
Time	07:33	07:12	06:01		
Conc.	3.42	6.62	12.5		
Response	518	2054	7887		
Calc. Conc.	3.42	6.60	12.5		
% Error	+0.2	-0.3	+0.2		
Calibration Curve:	Slope	Intercept	Corr Coeff	Min Area	Det Lim
	2.0969	1.5938	>0.9999	2	0.24

DMDS	1	2	3		
Time	07:33	07:12	06:01		
Conc.	2.59	5.03	9.51		
Response	755	3020	11423		
Calc. Conc.	2.59	5.03	9.50		
% Error	-0.0	+0.1	-0.0		
Calibration Curve:	Slope	Intercept	Corr Coeff	Min Area	Det Lim
	2.0924	2.0118	>0.9999	2	0.15

WESTON SOLUTIONS

CALIBRATION DATA

Number 2

Client: **Bowater**
Location: **Catawba, SC**
Source: **No. 2 Recovery**
Method: **16**

Project Number: **03917.0**
Operator: **T. Simpkins**
Date: **20 Jul 2006**

Ambient Temp 72°F **Baro. Press.** 29.41 in. Hg

Compound	**H_2S**	**MeSH**	**DMS**	**DMDS**
Perm. Device ID	T-20471	33-17281	89-20194	89-20197
Perm. Rate, nL/min	456	403	342	259
Ret. Time, sec	27.4	44.1	77.9	135.9
1 Flow 141 **mL/min**	**3.24** ppm	**2.86** ppm	**2.42** ppm	**1.84** ppm
Time: 18:48		**Peak Areas, mv-sec**		
	472	465	274	406
	469	480	260	381
	471	494	271	394
Average Area	**471**	**480**	**268**	**394**
2 Flow 57.1 **mL/min**	**7.99** ppm	**7.06** ppm	**5.99** ppm	**4.54** ppm
Time: 18:33		**Peak Areas, mv-sec**		
	3147	3215	1782	2583
	3145	3195	1765	2564
	3154	3205	1762	2538
Average Area	**3149**	**3205**	**1770**	**2562**
3 Flow 27.3 **mL/min**	**16.7** ppm	**14.8** ppm	**12.5** ppm	**9.51** ppm
Time: 18:13		**Peak Areas, mv-sec**		
	13467	13617	7554	10948
	13565	13752	7659	10979
	13338	13717	7691	11117
Average Area	**13456**	**13695**	**7635**	**11014**

WESTON SOLUTIONS

CALIBRATION SUMMARY

Number 2

Client: **Bowater**
Location: **Catawba, SC**
Source: **No. 2 Recovery**
Method: **16**

Project Number: **03917.0**
Operator: **T. Simpkins**
Date: **20 Jul 2006**

H_2S	1	2	3		
Time	18:48	18:33	18:13		
Conc.	3.24	7.99	16.7		
Response	471	3149	13456		
Calc. Conc.	3.21	8.13	16.5		
% Error	-0.8	+1.8	-1.0		
Calibration Curve:	Slope	Intercept	Corr Coeff	Min Area	Det Lim
	2.0444	1.6372	0.9998	2	0.22

MeSH	1	2	3		
Time	18:48	18:33	18:13		
Conc.	2.86	7.06	14.8		
Response	480	3205	13695		
Calc. Conc.	2.84	7.18	14.6		
% Error	-0.8	+1.8	-1.0		
Calibration Curve:	Slope	Intercept	Corr Coeff	Min Area	Det Lim
	2.0434	1.7559	0.9998	2	0.19

DMS	1	2	3		
Time	18:48	18:33	18:13		
Conc.	2.42	5.99	12.5		
Response	268	1770	7635		
Calc. Conc.	2.41	6.07	12.4		
% Error	-0.6	+1.4	-0.8		
Calibration Curve:	Slope	Intercept	Corr Coeff	Min Area	Det Lim
	2.0412	1.6491	0.9999	2	0.22

DMDS	1	2	3		
Time	18:48	18:33	18:13		
Conc.	1.84	4.54	9.51		
Response	394	2562	11014		
Calc. Conc.	1.83	4.60	9.44		
% Error	-0.6	+1.3	-0.7		
Calibration Curve:	Slope	Intercept	Corr Coeff	Min Area	Det Lim
	2.0304	2.0624	0.9999	2	0.14

PERMEATION RATE CALCULATIONS

Client: **Bowater**
Location: **Catawba, SC**
Source: **No. 2 Recovery**
Method: **16**

Project Number: **03917.0**
Operator: **T. Simpkins**
Date: **19 Jul 2006**

To calculate the permeation rate in volume units:

$$PR_{nl} = PR_{ng} \times (V_{mol} / W_{mol}) \times [(460° + T_a) / T_s] \times (P_s / P_a)$$

Where:

- PR_{nl} = Permeation Rate, nL/min
- PR_{ng} = Permeation Rate, ng/min
- V_{mol} = Molar Volume of any gas @32°F & 29.92 mm Hg = 22.4 L/mole
- W_{mol} = Molecular Weight of compound
- T_a = Ambient Temperature, °F
- T_s = Standard Temperature = 492°R
- P_s = Standard Pressure = 29.92 in Hg
- P_a = Ambient Pressure, in Hg

To calculate concentration: $C = PR_{nl} / F_d$

Where:

- C = Concentration, ppmv
- PR_{nl} = Permeation Rate, nL/min
- F_d = Diluent Flow Rate, mL/min

T_a = 72°F P_a = 29.41

H_2S: Device T-20471 PR_{ng} = 631 ng/min W_{mol} = 34.08
PR_{nl} = 631 x (22.4 / 34.08) x [(460 + 72) / 492] x (29.92 / 29.41)
= **456** nL/min

MeSH: Device 33-17281 PR_{ng} = 787 ng/min W_{mol} = 48.11
PR_{nl} = 787 x (22.4 / 48.11) x [(460 + 72) / 492] x (29.92 / 29.41)
= **403** nL/min

DMS: Device 89-20194 PR_{ng} = 862 ng/min W_{mol} = 62.14
PR_{nl} = 862 x (22.4 / 62.14) x [(460 + 72) / 492] x (29.92 / 29.41)
= **342** nL/min

DMDS: Device 89-20197 PR_{ng} = 992 ng/min W_{mol} = 94.20
PR_{nl} = 992 x (22.4 / 94.20) x [(460 + 72) / 492] x (29.92 / 29.41)
= **259** nL/min

	H_2S	MeSH	DMS	DMDS
Permeation Device ID	T-20471	33-17281	89-20194	89-20197
Permeation Rate, ng/min	631	787	862	992
Permeation Rate, nL/min	456	403	342	259

INSTRUMENT DATA

Client: **Bowater**
Location: **Catawba, SC**
Source: **No. 2 Recovery**
Method: **16**

Project Number: **03917.0**
Operator: **T. Simpkins**
Date: **19 Jul 2006**

File: C:\DATA\Bowater- Catawba, SC\Compliance 2006\No. 2 RB b.trw
Computer: WSAUB61 **Trailer:** 261

Analog Input Device Keithley KPCMCIA 16AI Card

Sampling Rate $^{64}/_{1024}$ ($^{1}/_{16}$) sec **Data Interval** 0.45 sec

Gas Chromatograph Shimadzu

Gases	Pressure psig	Flow mL/min
H_2	30	50
Air	30	60
Carrier	50	30

Temperatures	
Column	40°C
Detector	120°C

Sample Loop	3"
Column 1	Capillary
Column 2	Packed
Detector Range	10

Injection Cycle

Length 200 sec

Valve Timing	Time, sec
Inject	0
Load/Backflush	90

Injection is triggered by **internal** clock

Integration Parameters

Signal threshold 0.67 mv
Peak detection window ±5 sec
Minimum peak area 2 mv-sec **Minimum peak height** 1 mv above baseline

Dynacalibrator

Chamber Temperature 50.0°C
Ambient Temperature 72°F
Barometric Pressure 29.41 in. Hg

INSTRUMENT DATA

Client: **Bowater**
Location: **Catawba, SC**
Source: **No. 2 Recovery**
Method: **16**

Project Number: **03917.0**
Operator: **T. Simpkins**
Date: **19 Jul 2006**

File: C:\DATA\Bowater- Catawba, SC\Compliance 2006\No. 2 RB b.trw
Computer: WSAUB61 **Trailer:** 261

Analog Input Device Keithley KPCMCIA 16AI Card

Sampling Rate $^{64}/_{1024}$ ($^{1}/_{16}$) sec **Data Interval** 0.45 sec

Gas Chromatograph Shimadzu

Gases	Pressure psig	Flow mL/min
H_2	30	50
Air	30	60
Carrier	50	30

Temperatures	
Column	40°C
Detector	120°C

Sample Loop	3"
Column 1	Capillary
Column 2	Packed
Detector Range	10

Injection Cycle

Length 200 sec

Valve Timing	Time, sec
Inject	0
Load/Backflush	90

Injection is triggered by **internal** clock

Integration Parameters

Signal threshold 0.67 mv
Peak detection window ±5 sec
Minimum peak area 2 mv-sec **Minimum peak height** 1 mv above baseline

Dynacalibrator

Chamber Temperature 50.0°C
Ambient Temperature 72°F
Barometric Pressure 29.41 in. Hg

RUN DATA

Number 2

Client:	**Bowater**	Project Number:	**03917.008.007**
Location:	**Catawba, SC**	Operator:	**T. Simpkins**
Source:	**No. 3 Recovery**	Date:	**20 Jul 2006**
Calibration:	**1**		

Time	O2 mv	O2 %
Starting time 11:53		
No. 2 RF- TRS Run 1		
11:54:07	2485	6.1
11:54:37	2486	6.1
11:55:07	2486	6.1
11:55:37	2486	6.1
11:56:07	2486	6.1
Run Avg	**2486**	**6.1**

RUN DATA

Number 5

Client:	**Bowater**	Project Number:	**03917.008.007**
Location:	**Catawba, SC**	Operator:	**T. Simpkins**
Source:	**No. 3 Recovery**	Date:	**20 Jul 2006**
Calibration:	**1**		

Time	O2 mv	O2 %
Starting time 12:56		
No. 2 RF- Run 2 -TRS		
12:57:10	2591	6.4
12:57:40	2594	6.4
12:58:10	2604	6.4
12:58:40	2626	6.4
12:59:10	2632	6.5
12:59:40	2644	6.5
Run Avg	**2615**	**6.4**

RUN DATA

Number 11

Client:	**Bowater**	Project Number:	**03917.008.007**
Location:	**Catawba, SC**	Operator:	**T. Simpkins**
Source:	**No. 3 Recovery**	Date:	**20 Jul 2006**
Calibration:	**1**		

Time	O2		CO2	
	mv	%	mv	%
Starting time 17:48				
No. 2 RF- TRS Run 3				
17:48:43	2525	6.2	5215	13.1
17:49:13	2526	6.2	5216	13.1
17:49:43	2526	6.2	5217	13.1
17:50:13	2527	6.2	5217	13.1
17:50:43	2525	6.2	5221	13.1
17:51:13	2523	6.2	5221	13.1
Run Avg	**2525**	**6.2**	**5218**	**13.1**

CALIBRATION

Number 1

Client:	**Bowater**	Project Number:	**03917.008.007**
Location:	**Catawba, SC**	Operator:	**T. Simpkins**
Source:	**No. 3 Recovery**	Date:	**20 Jul 2006**

Starting Time: 10:37

O2

Method: EPA 3A

Calibration Type: Linear Regression

Calibration Results

%	**Cylinder ID**	**Result, mv**
Zero	-	88
10.1	CC92388	4050
20.4	SG880199NB	8149

Curve Coefficients

Slope	**Intercept**	**Corr. Coeff.**
395.2	78.2	>0.9999

CALIBRATION ERROR

Number 1

Client:	**Bowater**	Project Number:	**03917.008.007**
Location:	**Catawba, SC**	Operator:	**T. Simpkins**
Source:	**No. 3 Recovery**	Date:	**20 Jul 2006**

Starting Time: 10:37

O2

Method: EPA 3A

Slope 395.2 **Intercept** 78.2

Standard, %	**Response, mV**	**%**	**Error, %**
Zero	88	0.0	0.0
10.10	4050	10.1	0.0
20.4	8149	20.4	0.0

ANALYZER INFORMATION

Client:	**Bowater**	Project Number:	**03917.008.007**
Location:	**Catawba, SC**	Operator:	**T. Simpkins**
Source:	**No. 3 Recovery**	Date:	**20 Jul 2006**

File Name: C:\Data\Bowater- Catawba, SC\Compliance 2006\No. 3 RB 072006 a.cem
Computer: WSAUB60 **Trailer:** 261

Analog Input Device: **Keithley KPCMCIA 16AI Card**

Channel 1

Analyte	**O2**
Method	**EPA 3A**, Using Bias
Analyzer Make & Model	**CA 300**
Full-Scale Output, mv	**10000**
Span Concentration, %	**25.0**

ANALYZER INFORMATION

Client:	**Bowater**	Project Number:	**03917.008.007**
Location:	**Catawba, SC**	Operator:	**T. Simpkins**
Source:	**No. 3 Recovery**	Date:	**20 Jul 2006**

File Name: C:\Data\Bowater- Catawba, SC\Compliance 2006\No. 3 RB 072006 a.cem
Computer: WSAUB60 **Trailer:** 261

Analog Input Device: **Keithley KPCMCIA 16AI Card**

Channel 1

Analyte	**O2**
Method	**EPA 3A**, Using Bias
Analyzer Make & Model	**CA 300**
Full-Scale Output, mv	**10000**
Span Concentration, %	**25.0**

Determination of Stack Gas Velocity - Method 2

Client: Bowater
Location/Plant: Catawba, SC
Source: No. 2 RB
Operator: TS/MS
Date: 20 July '06
W.O. Number:
Pitot Coeff (Cp): .84
Stack Area, ft² (As): 71.82
Pitot Tube/Thermo ID: P160

Run Number	TRS-3		
Time	1625		
Barometric Press, in Hg (Pb)	29.47		
Static Press, in H_20 (Pstatic)	-.65		
Source Moisture, % (BWS)	22.43		
O_2, %	6.2		
CO_2, %	13.1		

Cyclonic Flow Determination		Traverse Location		Leak Check good ? Y / N		Leak Check good ? Y / N		Leak Check good ? Y / N	
Delta P at 0°	Angle yeilding zero Delta P	Port	Point	Delta P	Source Temp, F° (Ts)	Delta P	Source Temp, F° (Ts)	Delta P	Source Temp, F° (Ts)
.00 MS	<5	A	1	.53	379				
.00	<5		2	.54	379				
.00	<5		3	.58	379				
.00	<5		4	.61	379				
.00	<5		5	.56	381				
.00	<5		6	.56	381				
.00	<5		7	.57	381				
.00	<5		8	.34	381				
.00	<5	B-1	9	.62	380				
.00	<5	2	4	.65	380				
.00	<5	3	5	.62	381				
.00	<5	4	6	.59	380				
.00	<5	5		.47 TS	379				
.00	<5	6		.46	380				
.00	<5	7		.44	379				
.00	<5	8		.35	379				
Avg Angle		Avg Delta P & Temp		.532	379.9				
		avg $\sqrt{DeltaP}$		.726					
Average gas stream velocity, ft/sec.				52.96					
Vol. flow rate @ actual conditions, wacf/min				228224					
Vol. flow rate at standard conditions, dscf/min				109396					

$$MWd = (0.32 * O_2) + (0.44 * CO_2) + (0.28 * (100 - (CO_2 + O_2)))$$

$$MWs = (MWd * (1 - (BWS/100))) + (18 * (BWS/100))$$

$$Tsa = Ts + 460$$

$$Ps = Pb + (Pstatic/13.6)$$

$$Vs = 85.49 * Cp * avg\sqrt{DeltaP} * \sqrt{Tsa/(Ps * MWs)}$$

$$Qs(act) = 60 * Vs * As$$

$$Qs(std) = 17.64 * (1 - (BWS/100)) * (Ps/Tsa) * Qs(act)$$

where:
MWd = Dry molecular weight source gas, lb/lb-mole.
MWs = Wet molecular weight source gas, lb/lb-mole.
Tsa = Source Temperature, absolute(oR)
Ps = Absolute stack static pressure, inches Hg.
Vs = Average gas stream velocity, ft/sec.
Qs(act) = Volumetric flow rate of wet stack gas at actual,
Qs(std) = Volumetric flow rate of dry stack gas at standard conditions, dscf/min

Comments

WESTON MANAGERS DESIGNERS/CONSULTANTS

Copyright Roy F Weston Inc October 1998

Determination of Moisture Content in Stack Gases - Method 4

Client: Bowater
Location/Plant: Catawba, SC
Source: #2 RB
W.O. Number: 03917.007.011
Operator: MS
Meter Box ID: A01
Temperature °C or °F: °F
Date: 7-20-06
Meter Box Y: .992
Sample Volume, ft³ or L: ft³

Run Number		Sample Time (min)	Meter Volume, Vm	Meter Temp (or ambient temp for rotometer) Inlet	Outlet	Meter Press, Delta H (in H_2O)	Impinger Volume, ml	Silica Gel Weight, g	Corrected Volume, Vm(std)	Leak Rate Check
3									19.84	Initial .005@15
	End Test	1659	~~918.358~~ ~~918.0~~ 915	110		1.1	315	341.1		Final .005@15
Baro Press., Pb (in Hg)	Start Test	1623	896.581	105		1.1	200	334.2	Moisture Volume, Vw(std)	Percent Moisture (%), BWS
29.47	Avg. or Total	36	21.777	107.5		1.1	115	6.9	5.74	22.43

Run Number		Sample Time (min)	Meter Volume, Vm	Meter Temp (or ambient temp for rotometer) Inlet	Outlet	Meter Press, Delta H (in H_2O)	Impinger Volume, ml	Silica Gel Weight, g	Corrected Volume, Vm(std)	Leak Rate Check
										Initial _____
	End Test									Final _____
Baro Press., Pb (in Hg)	Start Test								Moisture Volume, Vw(std)	Percent Moisture (%), BWS
	Avg. or Total									

Run Number		Sample Time (min)	Meter Volume, Vm	Meter Temp (or ambient temp for rotometer) Inlet	Outlet	Meter Press, Delta H (in H_2O)	Impinger Volume, ml	Silica Gel Weight, g	Corrected Volume, Vm(std)	Leak Rate Check
										Initial _____
	End Test									Final _____
Baro Press., Pb (in Hg)	Start Test								Moisture Volume, Vw(std)	Percent Moisture (%), BWS
	Avg. or Total									

$$Vm(std) = \frac{17.64 * Y * Vm * (Pb + (deltaH / 13.6))}{(Tm + 460)}$$

if Tm is C° than $Tm = (Tmc * 1.8) + 32$

if Vm is liters than $Vm = Vml * 28.32$

$$Vw(std) = (0.04707 * Vwc) + (0.04715 * Wwsg)$$

$$BWS = \left(\frac{Vw(std)}{Vw(std) + Vm(std)}\right) * 100$$

WHERE:
Vm(std)= Sample volume corrected to standard temp and pressure, scf or L
Vm= Actual sample volume, calculated, scf
Vml= Actual sample volume, calculated, Liters
Y= Dry gas meter calibration factor.
Pb= Barometric pressure, in. Hg
delta H= Meter pressure, in H2O
Tm= Average temperature of meter (DGM is used) or rotomter, degrees °I
Tmc= Average temperature of meter (DGM is used) or rotomter, degrees °I
Vw(std)= Volume of water vapor at standard conditions, scf or L
Vwc= Volume of water condensed, mL
Wwsg= Weight of Silica Gel, g
Bws= Water vapor in gas stream, percer

WESTON MANAGERS DESIGNERS/CONSULTANTS

Use either ft³ or liters in calculations. DO NOT MIX CUBIC FEET AND LITERS IN ANY CALCULATION.

APPENDIX D
LABORATORY DATA

Inter-Office Memorandum

WESTON SOLUTIONS
Restoring Resource Efficiency

Auburn Operations

TO: Temp Simpkins cc: file

FROM: Brian Benson DATE: 27 July 2006

PROJECT: Bowater – Catawba, SC

W.O.NO: 03917.008.007

SUBJECT: Method 5 Analysis Results.

ACTION: Analysis of samples received on 21 July 2006.

This letter with attachments constitutes our report of gravimetric determination of the glass fiber filters, acetone and water rinse fractions submitted to the laboratory for particulate analysis. The samples arrived in good condition and in accordance with the chain-of-custody. The samples were prepared on 21 July 2006 and analyzed on 24 July 2006 through 26 July 2006. The analysis followed procedures in USEPA Reference Method 5 for particulate emissions from stationary sources.

QUALITY ASSURANCE AND QUALITY CONTROL:

Quality control procedures conformed to the requirements of the reference method and our laboratory quality assurance program. Duplicate filter weights differed less than 0.5 mg or 1% of the total weight less the tare weight, whichever is greater. The water rinse fraction blank residue correction was equal to 0.001% of the total mass of the wash solvent used; therefore the water rinse fractions are blank corrected per EPA method 5. The acetone wash fraction blank residue correction was less than 0.001% of the total mass of the wash solvent used; therefore the acetone rinse fractions are blank corrected per EPA method 5. Filter residue weights were not blank corrected.

Substantiating data is on file and available upon request.

tal

attachments

Analysis Report

for Particulates by EPA Method 5

CLIENT : Bowater - Catawba, SC
WESTON W.O. No. : 03917.008.007
Date Received : 21 July 2006
Analyst : STH

Balance ID: Mettler AE163
Density of Acetone (g/mL): 0.791
Lab Ambient Temp (F): 73
Lab Rel Humidity (%): 54
Barometric Pressure (Hg): 31.08

Source	# 2 Recovery			
Field Run No.	**ONE**	**TWO**	**THREE**	**FIELD BLANK**
LIQUID FRACTION				
Filter ID	CZ 8097	CZ 8098	CZ 7689	CZ 8088
Beaker ID	34-07	35-07	36-07	26-07
Liquid Volume (mL)	105	68	72	94
Constant Initial Weight (g)	**111.5379**	**112.4437**	**110.7467**	**113.6632**
Constant Final Weight (g)	**111.5541**	**112.4547**	**110.7553**	**113.6623**
Final-Initial Beaker Wts. (g)	0.0162	0.0111	0.0086	-0.0009
Sample/Blank Volume Ratio	1.1170	0.7234	0.7660	
Liquid Blank Correction, ≤ 0.001% (g)	-0.0010	-0.0007	-0.0007	
Liquid Blank Correction, > 0.001% (g)*	-0.0011	-0.0007	-0.0007	
Liquid Particulate Weight (g)	**0.0172**	**0.0117**	**0.0093**	**-0.0009**
FILTER FRACTION				
Filter ID	CZ 8097	CZ 8098	CZ 7689	CZ 8088
Constant Initial Weight (g)	**33.6852**	**36.7872**	**40.0125**	**32.7580**
Constant Final Weight (g)	**33.6847**	**36.7889**	**40.0114**	**32.7573**
Final-Initial Filter Wts. (g)	-0.0005	0.0018	-0.0012	-0.0007
Filter Blank (g)	-0.0007	-0.0007	-0.0007	
Filter Particulate Weight (g)	**-0.0005**	**0.0018**	**-0.0012**	
SUMMARY				
Filter Particulate Weight (g)	**-0.0005**	**0.0018**	**-0.0012**	
Liquid Particulate Weight (g)	**0.0172**	**0.0117**	**0.0093**	
Net Particulate Weight (g)	**0.0172**	**0.0135**	**0.0093**	

Negative values are not included in the Net Particulate Weight.

Values are rounded for presentation purposes only, thus values shown may differ from actual calculations.

Sample Recovery Solution **Water**

Weight Percent of Blank Liquid Fraction **0.0010%**

***Note: If the blank liquid fraction has a residue correction of greater than 0.001 percent, then the samples are blank corrected upto 0.001 % of the mass of the wash solvent.**

Custody Transfer Record / Lab Service Request

Page__of__

Client: Bowater Catawba, S.C.

Work Order No.: 03917.008.007

Desired TAT: 3 days Results Due By: ASAP

Project Manager: Simpkins

Submitted By: Phone #:

ANALYSES REQUESTED: gravimetric

ANALYTICAL METHOD: EPA 5

Weston Use Only LAB ID	Client ID/ Sample Description	Matrix	Date Collected	gravimetric				Baker #	Volume mL
	CZ 8088 Blank flt/ACE/DI	flt/ACE/DI	7-18-06				Acetone / DI H2O	27 07 / 26 07	93 / 94
	CZ 8090 #2 Comb. Boiler Run 1 flt/FHR	flt/ACE	7/18/06					28 07	75
	CZ 8091 #2 Comb. Boiler Run 2 flt/FHR	flt/ACE	7/18/06					29 07	92
	CZ 8092 #2 Comb. Boiler Run 3 flt/FHR	flt/ACE	7/18/06					30 07	95
	CZ 8093 #1 Comb. Boiler Run 1 flt/fhr	flt/ACE	7-18-06					31 07	95
	CZ 8094 #1 Comb. Boiler Run 2 flt/fhr	flt/ACE	7-18-06					32 07	72
	CZ 8095 #1 Comb Boiler Run 3 flt/fhr	flt/ACE	7-18-06					33 07	110
	CZ 8097 No. 2 Recovery Run 1 flt/FHR	flt/H2O	7-20-06					34 07	105
	CZ 8098 No. 2 Recovery Run 2 flt/FHR	flt/H2O	↓					35 07	68
	CZ 7689 No. 2 Recovery Run 3 flt/FHR	flt/H2O	↓					36 07	72
	TOTAL LISTED ON THIS COC								

RELINQUISHED BY	RECEIVED BY	DATE/TIME	# / CONDITION	RELINQUISHED BY	RECEIVED BY	DATE/TIME	# / CONDITION
MF	Carmen Carlton	7/21/06/1500	10/good				

WESTON Analytics Use Only

SAMPLES WERE Shipped or Hand Dely'd

Ambient or Chilled

Intact or Damaged

SECURITY SEALS WERE Present or Absent

Intact or Broken or N/A

SAMPLE LOSS Y or N

COC ACCURATE Y or N

NOTE SAMPLE ID ON BACK

WESTON

APPENDIX E
QUALITY CONTROL DATA

EQUIPMENT CALIBRATIONS

METHOD 5 DRY GAS METER CALIBRATION USING CRITICAL ORIFICES

1) Select three critical orifices to calibrate the dry gas meter which bracket the expected operating range.
2) Record barometric pressure before and after calibration procedure.
3) Run at tested vacuum (from Orifice Calibration Report), for a period of time necessary to achieve a minimum total volume of 5 cubic feet.
4) Record readings in outlined boxes below, other columns are automatically calculated.

DATE: 12/19/05
METER PART #: AO1

METER SERIAL #: 6847792
CRITICAL ORIFICE SET SERIAL #: 13315

	INITIAL	FINAL	AVG (P_{bar})
BAROMETRIC PRESSURE (in Hg):	29.68	29.65	29.67

Calibrated by:

ORIFICE #	RUN #	K' FACTOR (AVG)	TESTED VACUUM (in Hg)	DGM READINGS (FT^3) INITIAL	DGM READINGS (FT^3) FINAL	DGM READINGS (FT^3) NET (V_m)	AMBIENT F°	DGM F° INITIAL	DGM F° FINAL	DGM AVG	ELAPSED TIME (MIN) θ	DGM ΔH (in H_2O)	(1) V_m (STD)	(2) V_{cr} (STD)	(3) Y	(4) $\Delta H_@$
12	1	0.3359	25	560.517	575.965	15.448	66	71	73	72	35	0.52	15.224	15.211	0.999	1.549
16	2	0.4418	24	581.601	592.169	10.568	67	74	75	75	18	0.97	10.377	10.279	0.991	1.673
19	3	0.5188	22	614.000	624.429	10.429	67	76	77	77	15	1.40	10.213	10.059	0.985	1.751
25	4	0.6885	21	649.900	660.768	10.868	68	73	75	74	12	2.40	10.720	10.669	0.995	1.708
31	5	0.8376	18	632.000	644.218	12.218	69	77	80	79	11	3.60	11.986	11.887	0.992	1.734
														AVG =	**0.992**	**1.683**

USING THE CRITICAL ORIFICES AS CALIBRATION STANDARDS:

The following equations are used to calculate the standard volumes of air passed through the DGM, V_m (std), and the critical orifice, V_{cr} (std), and the DGM calibration factor, Y. These equations are automatically calculated in the spreadsheet above.

Individual Y's .02 from average? YES

Individual $\Delta H_@$ values 0.2 from average? YES

(1) $V_m\,(std) = K_1\, V_m \dfrac{P_{bar} + (\Delta H/13.6)}{T_m}$ = Net volume of gas sample passed through DGM, corrected to standard conditions

K_1 = 17.64 °R/in. Hg (English), 0.3858 °K/mm Hg (Metric)

T_m = Absolute DGM avg. temperature (°R - English, °K - Metric)

(2) $V_{cr}\,(std) = K' \sqrt{\dfrac{P_{bar}\,\theta}{T_{amb}}}$ = Volume of gas sample passed through the critical orifice, corrected to standard conditions

T_{amb} = Absolute ambient temperature (°R - English, °K - Metric)

K' = Average K' factor from Critical Orifice Calibration

(3) $Y = \dfrac{V_{cr}\,(std)}{V_m\,(std)}$ = DGM calibration factor

(4) $\Delta H_@ = \left(\dfrac{0.75\,\theta}{V_{cr}(std)}\right)^2 \Delta H$

Bowater
Catawba, South Carolina

03917.008.007
No. 2 Recovery Boiler

POST-TEST METER Y CALIBRATION CHECK

Meter ID:

Run Number		1	2	3	Mean
Sampling Time, min	(Theta)	64	64	64	64
Meter Volume, ft^3	(Vm)	44.808	45.268	43.840	44.639
Meter Temperature, R	(tm)	549	560	566	558
Barometric Pressure, in. Hg	(Pb)	29.47	29.47	29.47	29.47
Meter Orifice Pressure, in. H_2O	(dH)	1.538	1.536	1.391	1.488
Meter Pressure, in. Hg	(Pm)	29.58	29.58	29.57	29.58
Ave Sq Rt Meter Orifice Pressure, in. H_2O	((sqrt. dH)ave	1.236	1.237	1.178	1.217
Meter Orifice Calibraion Coefficient, in. H_2O	(dH@)	1.683	1.683	1.683	1.683
Dry Mol. Wt. of Stack Gas, lb/lb-mole	(Md)	30.34	30.31	30.36	30.34
Dry Gas Meter Cal. Check Value	(Yqa)	1.0231	1.0244	1.0122	1.0199
Meter Correction Factor	(Y)	0.9920	0.9920	0.9920	0.9920
Mean Percent Difference, %	< +/- 5%				**2.81**

CALIBRATION GAS CERTIFICATES

Airgas

Airgas Specialty Gases
1075 Cinclare Drive
Port Allen, LA 70767
225.388.0900 Fax: 225.388.0959
www.airgas.com

Certificate of Analysis: EPA Protocol Gas Mixture

Cylinder Number:	CC92388	Reference Number:	83-124064666-1
Cylinder Pressure:	2000.6 PSIG	Expiration Date:	5/10/2009
Certification Date:	5/10/2006	Laboratory:	ASG - Port Allen - LA

Certified Concentrations

Component	Concentration	Accuracy	Analytical Principle	Procedure
CARBON DIOXIDE	9.943 %	+/- 1%	NonDispersive Infrared	G1
OXYGEN	10.05 %	+/- 1%	Paramagnetic	G1
NITROGEN	Balance			

Certification performed in accordance with "EPA Traceability Protocol (Sept. 1997)" using the assay procedures listed. Analytical Methodology does not require correction for analytical interferences.

Notes:

Do not use cylinder below 150 psig.

Approval Signature

Reference Standard Information

Type	Balance Gas	Component	Cyl.Number	Concentration
NTRM 82658	NITROGEN	OXYGEN	CC14336	9.72 %
NTRM 81674	NITROGEN	CARBON DIOXIDE	XC018732B	6.89 %

Analytical Results

1st Component CARBON DIOXIDE

1st Analysis Date: 05/11/2006

R 7.04	S 10.16	Z 0.02	Conc 9.943 %
S 10.16	Z 0.02	R 7.06	Conc 9.943 %
Z 0.02	R 7.04	S 10.16	Conc 9.943 %
			AVG: 9.943 %

2nd Component OXYGEN

1st Analysis Date: 05/10/2006

R 9.68	S 10.02	Z -0.02	Conc 10.06 %
S 10.00	Z -0.02	R 9.68	Conc 10.04 %
Z -0.02	R 9.68	S 10.00	Conc 10.04 %
			AVG: 10.05 %

Airgas

Airgas Specialty Gases
12722 South Wentworth Avenue
Chicago, IL 60628
www.airgas.com

Certificate of Analysis: EPA Protocol Gas Mixture

Cylinder Number: SG880199NB Reference Number: 54-124028233-8
Cylinder Pressure: 1999.6 PSIG Expiration Date: 1/20/2008
Certification Date: 1/20/2005 Laboratory: ASG - Chicago - IL

Certified Concentrations

Component	Concentration	Accuracy	Analytical Principle	Procedure
CARBON DIOXIDE	19.48 %	+/- 1%	NDIR	G1
OXYGEN	20.40 %	+/- 1%	Paramagnetic	G1
NITROGEN	Balance			

Certification performed in accordance with "EPA Traceability Protocol (Sept. 1997)" using the assay procedures listed. Analytical Methodology does not require correction for analytical interferences.

Notes:

Do not use cylinder below 150 psig. Approval Signature

Reference Standard Information

Type	Balance Gas	Component	Cyl.Number	Concentration
NTRM 100504		OXYGEN	SG9168314BAL	20.98 %
ntrm 040604		CARBON DIOXIDE	xco343190	19.84 %

Analytical Results

1st Component CARBON DIOXIDE

1st Analysis Date: 01/20/2005

R 19.83	S 19.46	Z 0	Conc 19.47 %
S 19.47	Z 0	R 19.83	Conc 19.48 %
Z 0	R 19.82	S 19.46	Conc 19.48 %
			AVG: 19.48 %

2nd Component OXYGEN

1st Analysis Date: 01/20/2005

R 20.98	S 20.40	Z 0	Conc 20.40 %
S 20.41	Z 0	R 20.99	Conc 20.40 %
Z 0	R 20.99	S 20.41	Conc 20.40 %
			AVG: 20.40 %

APPENDIX F
PROCESS OPERATING/PRODUCTION DATA

No. 2 Recovery Boiler
Process Data

	Steam Load MPPH rfr256.pv	Opacity % ral249c1.pv		Black Liquor GPM r2liq.pv	Liquor Solids % rdr204a.pv	Oxygen % O2 25AI131A.pv	TRS PPM 25AI131B.pv	TRS/O_2 PPM 25AI131C.pv	# BLS/Hr	MMlbs BLS / day	Equv. Pulp Proc ADTP/hr
07/20/06 08:00 AM	274	33		176	67	6.0	1.2	1.1	76,314	1.8	25
07/20/06 08:06 AM	287	21	Out of alignment	177	67	6.1	1.3	1.2	76,813	1.8	25
07/20/06 08:12 AM	287	9		178	67	6.1	1.9	1.7	77,194	1.9	25
07/20/06 08:18 AM	294	8		177	67	5.8	1.4	1.8	76,831	1.8	25
07/20/06 08:24 AM	291	8		178	67	5.7	1.1	1.0	77,019	1.8	25
07/20/06 08:30 AM	291	29		176	67	5.9	1.6	1.5	76,302	1.8	25
07/20/06 08:36 AM	282	23		178	67	5.9	2.5	2.2	77,009	1.8	25
07/20/06 08:42 AM	325	9		177	67	5.9	6.4	5.5	76,650	1.8	25
07/20/06 08:48 AM	309	8		177	67	5.9	3.4	4.7	76,560	1.8	25
07/20/06 08:54 AM	285	8		177	67	5.9	2.5	2.2	76,732	1.8	25
07/20/06 09:00 AM	282	8		177	67	5.8	1.6	1.4	76,728	1.8	25
07/20/06 09:06 AM	304	8		178	67	5.9	1.4	1.1	76,931	1.8	25
07/20/06 09:12 AM	310	8		177	67	5.8	1.4	1.2	76,576	1.8	25
07/20/06 09:18 AM	298	8		178	67	5.8	1.3	1.2	77,053	1.8	25
07/20/06 09:24 AM	292	8		178	67	5.8	1.0	0.8	76,985	1.8	25
07/20/06 09:30 AM	291	9		177	67	5.8	1.0	0.9	76,545	1.8	25
07/20/06 09:36 AM	291	8		177	67	5.6	1.0	0.9	76,468	1.8	25
07/20/06 09:42 AM	295	8		177	67	5.5	1.2	1.0	76,698	1.8	25
07/20/06 09:48 AM	304	8		177	67	5.6	1.2	1.1	76,677	1.8	25
07/20/06 09:54 AM	306	8		176	67	5.6	1.0	0.9	76,176	1.8	25
07/20/06 10:00 AM	296	8		175	67	5.6	1.1	1.0	76,011	1.8	25
07/20/06 10:06 AM	285	8		176	67	5.5	1.0	0.9	76,207	1.8	25
07/20/06 10:12 AM	292	8		175	67	5.7	1.2	1.0	75,832	1.8	25
07/20/06 10:18 AM	294	8		176	67	5.4	1.2	1.2	76,111	1.8	25
07/20/06 10:24 AM	297	47	Out of alignment	176	67	5.5	1.3	1.1	76,094	1.8	25
07/20/06 10:30 AM	293	49		175	67	5.4	1.1	1.4	75,990	1.8	25
07/20/06 10:36 AM	301	49		175	67	5.5	1.0	2.8	75,832	1.8	25
07/20/06 10:42 AM	301	24		175	67	5.8	1.3	1.1	75,941	1.8	25
07/20/06 10:48 AM	300	9		175	67	5.6	1.1	0.8	75,631	1.8	25
07/20/06 10:54 AM	291	8		176	67	6.0	0.9	0.7	76,222	1.8	25
07/20/06 11:00 AM	296	7		177	67	6.0	1.1	0.9	76,541	1.8	25
07/20/06 11:06 AM	307	7		176	67	6.0	0.9	0.6	76,288	1.8	25
07/20/06 11:12 AM	310	7		175	67	5.7	1.1	1.0	75,895	1.8	25
07/20/06 11:18 AM	300	7		175	67	5.7	1.4	1.0	76,019	1.8	25
07/20/06 11:24 AM	282	7		176	67	5.8	1.0	0.8	76,337	1.8	25
07/20/06 11:30 AM	284	7		176	67	5.8	1.2	1.0	76,396	1.8	25
07/20/06 11:36 AM	293	7		175	67	6.0	1.3	0.9	75,644	1.8	25
07/20/06 11:42 AM	325	7		174	67	6.0	2.0	1.7	75,528	1.8	25
07/20/06 11:48 AM	328	7		174	67	6.0	2.0	1.5	75,548	1.8	25
07/20/06 11:54 AM	273	7		174	67	5.8	5.6	4.8	75,595	1.8	25
07/20/06 12:00 PM	301	7		176	67	5.7	4.2	3.6	76,056	1.8	25
07/20/06 12:06 PM	304	7		175	67	5.8	2.4	1.7	75,829	1.8	25
07/20/06 12:12 PM	304	8		175	67	5.9	2.0	1.7	75,787	1.8	25
07/20/06 12:18 PM	283	8		174	67	5.5	1.4	1.1	75,584	1.8	25
07/20/06 12:24 PM	272	9		176	67	5.8	2.1	1.7	76,155	1.8	25
07/20/06 12:30 PM	304	10		176	67	5.8	2.5	2.2	76,102	1.8	25
07/20/06 12:36 PM	306	10		175	67	6.0	1.4	0.7	75,782	1.8	25
07/20/06 12:42 PM	296	10		175	67	5.9	1.3	1.1	75,752	1.8	25
07/20/06 12:48 PM	274	9		176	67	5.9	1.1	1.0	76,334	1.8	25
07/20/06 12:54 PM	291	9		176	67	6.0	1.6	1.4	76,436	1.8	25
07/20/06 01:00 PM	293	9		177	67	5.8	1.4	1.2	76,591	1.8	25
07/20/06 01:06 PM	298	9		175	67	5.8	1.2	0.8	75,922	1.8	25
07/20/06 01:12 PM	299	8		175	67	5.7	1.6	1.3	76,048	1.8	25
07/20/06 01:18 PM	290	8		176	67	5.7	2.1	1.6	76,254	1.8	25
07/20/06 01:24 PM	287	8		175	67	5.7	2.0	1.6	76,086	1.8	25
07/20/06 01:30 PM	297	8		174	67	5.6	3.9	3.3	75,605	1.8	25
07/20/06 01:36 PM	299	8		175	67	5.3	4.7	4.3	75,847	1.8	25
07/20/06 01:42 PM	307	7		174	67	5.6	3.6	3.1	75,692	1.8	25
07/20/06 01:48 PM	309	7		174	67	5.5	3.1	2.4	75,279	1.8	25
07/20/06 01:54 PM	311	7		174	67	5.5	2.7	2.3	75,627	1.8	25
07/20/06 02:00 PM	301	7		175	67	5.4	2.6	2.2	75,898	1.8	25
07/20/06 02:06 PM	304	9		174	67	5.5	2.1	1.3	75,337	1.8	25
07/20/06 02:12 PM	298	7		174	67	5.4	1.8	1.5	75,641	1.8	25
07/20/06 02:18 PM	277	7		176	67	5.3	1.8	2.2	76,209	1.8	25
07/20/06 02:24 PM	286	7		175	67	5.3	3.2	2.6	76,127	1.8	25
07/20/06 02:30 PM	300	7		176	67	5.4	1.9	1.7	76,177	1.8	25
07/20/06 02:36 PM	304	7		176	67	5.4	1.4	1.4	76,475	1.8	25
07/20/06 02:42 PM	301	7		177	67	5.5	1.5	1.2	76,640	1.8	25
07/20/06 02:48 PM	293	7		177	67	5.7	1.7	1.6	76,824	1.8	25
07/20/06 02:54 PM	299	7		177	67	5.8	1.0	0.9	76,802	1.8	25
07/20/06 03:00 PM	297	7		177	67	5.7	1.5	1.3	76,732	1.8	25
07/20/06 03:06 PM	294	7		176	67	5.6	1.7	1.6	76,397	1.8	25
07/20/06 03:12 PM	296	7		176	67	5.5	2.1	1.8	76,569	1.8	25
07/20/06 03:18 PM	294	7		177	67	5.4	2.1	2.0	76,741	1.8	25
07/20/06 03:24 PM	315	8		176	67	5.5	1.8	1.5	76,212	1.8	25

No. 2 Recovery Boiler
Process Data

07/20/06 03:30 PM	300	8	177	67	5.4	1.7	1.5	76,716	1.8	25
07/20/06 03:36 PM	277	8	176	67	5.3	2.4	1.8	76,358	1.8	25
07/20/06 03:42 PM	296	8	174	67	5.4	2.9	2.4	75,449	1.8	25
07/20/06 03:48 PM	305	8	175	67	5.3	2.9	2.1	75,837	1.8	25
07/20/06 03:54 PM	300	8	174	67	5.3	3.3	2.7	75,378	1.8	25
07/20/06 04:00 PM	303	8	174	67	5.2	4.7	3.9	75,413	1.8	25
07/20/06 04:06 PM	291	9	174	67	5.1	2.8	2.0	75,261	1.8	25
07/20/06 04:12 PM	304	9	174	67	5.2	3.4	2.8	75,332	1.8	25
07/20/06 04:18 PM	310	9	173	67	5.3	2.6	1.9	75,023	1.8	25
07/20/06 04:24 PM	299	9	172	67	5.2	3.9	3.2	74,742	1.8	24
07/20/06 04:30 PM	290	10	173	67	5.3	2.6	2.2	74,875	1.8	25
07/20/06 04:36 PM	291	9	173	67	5.4	1.9	1.2	74,825	1.8	24
07/20/06 04:42 PM	327	9	173	67	5.9	1.9	1.6	74,844	1.8	25
07/20/06 04:48 PM	331	9	173	67	6.1	2.0	1.5	74,826	1.8	24
07/20/06 04:54 PM	304	9	173	67	6.2	2.0	1.7	74,881	1.8	25
07/20/06 05:00 PM	289	9	173	67	6.0	3.3	2.9	74,993	1.8	25
07/20/06 05:06 PM	286	9	172	67	5.8	2.4	1.5	74,599	1.8	24
07/20/06 05:12 PM	298	9	172	67	5.7	2.2	1.8	74,664	1.8	24
07/20/06 05:18 PM	304	10	172	67	5.3	1.7	1.3	74,634	1.8	24
07/20/06 05:24 PM	301	10	172	67	5.4	2.1	1.7	74,763	1.8	24
07/20/06 05:30 PM	290	9	172	67	5.6	3.7	3.1	74,431	1.8	24
07/20/06 05:36 PM	287	9	171	67	5.6	4.4	3.5	74,239	1.8	24
07/20/06 05:42 PM	300	9	171	67	5.4	6.8	5.6	74,171	1.8	24
07/20/06 05:48 PM	308	9	171	67	5.4	7.3	5.5	74,211	1.8	24
07/20/06 05:54 PM	295	9	171	67	5.6	6.1	5.1	74,309	1.8	24

No. 2 Recovery Boiler
EP Data

	N-1		N-2		N-3		S-1		S-2		S-3	
	25ev109b.pv Kv	25ea109a.pv Ma	25ev110b.pv Kv	25ea110a.pv Ma	25ev111b.pv Kv	25ea111a.pv Ma	25ev112b.pv Kv	25ea112a.pv Ma	25ev113b.pv Kv	25ea113a.pv Ma	25ev114b.pv Kv	25ea114a.pv Ma
07/20/06 08:00 AM	38	1573	0	1267	42	1264	41	1221	42	1310	42	1444
07/20/06 08:15 AM	34	1533	0	1266	42	1264	41	1094	43	1310	42	1444
07/20/06 08:30 AM	35	1551	0	1266	42	1264	40	1179	42	1311	42	1443
07/20/06 08:45 AM	36	1570	0	1266	41	1265	42	1216	42	1310	42	1447
07/20/06 09:00 AM	38	1560	0	1266	41	1264	41	1163	42	1311	42	1445
07/20/06 09:15 AM	36	1562	0	1267	42	1264	41	1113	43	1311	42	1443
07/20/06 09:30 AM	37	1553	0	1265	42	1263	40	1160	42	1311	42	1442
07/20/06 09:45 AM	39	1558	0	1267	42	1265	40	1270	42	1310	42	1446
07/20/06 10:00 AM	38	1542	0	1267	42	1264	41	1243	42	1310	42	1443
07/20/06 10:15 AM	35	1544	0	1266	42	1264	41	1094	43	1311	42	1442
07/20/06 10:30 AM	34	1517	0	1266	42	1263	40	1026	43	1311	42	1443
07/20/06 10:45 AM	32	1503	0	1266	41	1266	40	1052	42	1311	41	1446
07/20/06 11:00 AM	34	1541	0	1266	41	1265	40	1163	42	1311	42	1444
07/20/06 11:15 AM	33	1480	0	1265	41	1265	40	1014	43	1311	42	1444
07/20/06 11:30 AM	39	1509	0	1266	41	1263	40	1300	42	1310	42	1443
07/20/06 11:45 AM	36	1492	0	1265	42	1263	40	1159	43	1311	42	1444
07/20/06 12:00 PM	39	1539	0	1265	42	1264	41	1308	42	1311	42	1445
07/20/06 12:15 PM	37	1554	0	1262	42	1264	41	1127	43	1312	42	1446
07/20/06 12:30 PM	34	1523	0	1262	42	1265	41	1144	43	1311	42	1444
07/20/06 12:45 PM	37	1563	0	1266	42	1264	41	1244	42	1311	42	1444
07/20/06 01:00 PM	39	1564	0	1266	42	1266	41	1311	42	1310	42	1443
07/20/06 01:15 PM	40	1553	0	1267	42	1266	41	1252	42	1310	42	1443
07/20/06 01:30 PM	39	1550	0	1267	42	1263	39	1282	42	1309	42	1443
07/20/06 01:45 PM	41	1530	0	1268	42	1264	41	1366	42	1310	42	1444
07/20/06 02:00 PM	39	1556	0	1265	42	1265	41	1382	42	1311	42	1444
07/20/06 02:15 PM	39	1558	0	1264	42	1260	41	1334	42	1312	42	1446
07/20/06 02:30 PM	39	1531	0	1264	42	1259	41	1344	42	1312	42	1446
07/20/06 02:45 PM	38	1538	0	1262	42	1259	41	1282	42	1312	42	1447
07/20/06 03:00 PM	39	1528	0	1263	42	1261	40	1315	42	1312	42	1447
07/20/06 03:15 PM	39	1557	0	1264	42	1260	40	1336	42	1312	42	1446
07/20/06 03:30 PM	40	1560	0	1265	42	1260	40	1322	42	1312	42	1446
07/20/06 03:45 PM	41	1543	0	1265	42	1260	40	1241	42	1313	42	1446
07/20/06 04:00 PM	42	1544	0	1265	42	1261	40	1483	42	1311	42	1446
07/20/06 04:15 PM	41	1522	0	1266	42	1261	41	1360	42	1312	42	1447
07/20/06 04:30 PM	36	1514	0	1265	41	1266	40	1202	42	1312	42	1447
07/20/06 04:45 PM	37	1528	0	1266	41	1265	40	1232	42	1312	41	1446
07/20/06 05:00 PM	39	1524	0	1267	41	1264	41	1371	42	1312	42	1447
07/20/06 05:15 PM	39	1542	0	1265	41	1265	40	1206	42	1312	42	1447
07/20/06 05:30 PM	40	1551	0	1268	41	1264	40	1411	41	1312	42	1446
07/20/06 05:45 PM	42	1534	0	1267	41	1264	41	1516	41	1311	42	1446