Bethlehem Steel Corporation

BURNS HARBOR DIVISION
BOX 248
CHESTERTON, IN 46304

October 15, 1997
Ref.: PF/UIC/PER

CERTIFIED MAIL
RETURN RECEIPT REQUESTED

RECEIVED
OCT 21 1997

N. M. Wiser, Permit Writer
Underground Injection Control Section, WD-17J
United States Environmental Protection Agency
77 West Jackson Boulevard
Chicago, Illinois 60604-3590

Subject: Underground Injection Control (UIC) Permit Application Deficiencies
Bethlehem Steel Corporation, Burns Harbor Division

Reference:
(1) Letter, N. M. Wiser to T. W. Easterly, "Deficient Underground Injection Control (UIC) Permit Applications for the Following Injection Wells:
Waste Pickle Liquor Well #1 (EPA Permit #IN-127-1W-0001)
Waste Ammonia Liquor Well #1 (EPA Permit #IN-127-1W-0003)
Waste Ammonia Liquor Well #2 (EPA Permit #IN-127-1W-0004)", dated July 10, 1997 (Received July 15, 1997).

(2) Letter, N. M. Wiser to T. W. Easterly, "Approval of Request for Extension to Respond to Notice of Deficient Underground Injection Control (UIC) Permit Applications", dated September 11, 1997 (Received September 22, 1997).

Dear Mr. Wiser:

Enclosed, for your review and approval, are two (2) copies of the subject permit application that has been revised to address the comments provided in Reference 1. This revised subject permit application is timely submitted as required by Reference 2.

If there are any questions concerning this matter, please contact me or D. P. Bley at (219) 787-2712.

Very truly yours,

T. W. Easterly, P.E., DEE
Superintendent
Environmental Services Department

Enclosures

UIC PERMIT RENEWAL APPLICATIONS

FOR

SPL-1 (PERMIT NUMBER IN-127-1W-0001)
WAL-1 (PERMIT NUMBER IN-127-1W-0003)
WAL-2 (PERMIT NUMBER IN-127-1W-0004)

for

BETHLEHEM STEEL CORPORATION, INC.
BURNS HARBOR DIVISION

OCTOBER 1997

VOLUME 1 OF 2

TEXAS WORLD OPERATIONS INC
520 POST OAK BLVD SUITE 450
HOUSTON TEXAS 77027-9405
(713) 850-0003

Form Approved. OMB No. 2040-0042. Expires 6-30-98

EPA

United States Environmental Protection Agency

Underground Injection Control Permit Application

(Collected under the authority of the Safe Drinking Water Act, Sections 1421, 1422, 40 CFR 144)

I. EPA ID Number

		T/A	C
U	IND003913423		

Read Attached Instructions Before Starting

For Official Use Only

Application approved mo	day	year	Date received mo	day	year	Permit Number	Well ID	FINDS Number

II. Owner Name and Address

Owner Name: Bethlehem Steel Corp. WPL No. 1

Street Address: Burns Harbor Plant, P O Box 248 | Phone Number:

City: Chesterton | State: IN | ZIP CODE: 46304

III. Operator Name and Address

Operator Name: Bethlehem Steel Corporation

Street Address: Burns Harbor Plant, P O Box 248 | Phone Number:

City: Chesterton | State: IN | ZIP CODE: 46304

IV. Commercial Facility

[ ] Yes
[X] No

V. Ownership

[X] Private
[ ] Federal
[ ] Other

VI. Legal Contact

[X] Owner
[ ] Operator

VII. SIC Codes

331

VIII. Well Status *(Mark "x")*

[X] A. Operating — Date Started: mo 03, day 30, year 68

[ ] B. Modification/Conversion

[ ] C. Proposed

IX. Type of Permit Requested *(Mark "x" and specify if required)*

[X] A. Individual [ ] B. Area

Number of Existing Wells	Number of Proposed Wells	Name(s) of field(s) or project(s)
3	0	

X. Class and Type of Well *(see reverse)*

A. Classes(es) (enter codes(s)	B. Type(s) (enter codes(s)	C. If class is "other" or type is code 'x,' explain	D. Number of wells per type (if area permit)
1	W		

XI. Location of Well(s) or Approximate Center of Field or Project

Latitude Deg	Min	Sec	Longitude Deg	Min	Sec	Township and Range Sec	Twp	Range	1/4 Sec	Feet From	Line	Feet From	Line
41	37	58	87	07	08	28	37N	6W	NW	1600	W	1250	N

XII. Indian Lands (Mark 'x')

[ ] Yes
[X] No

XIII. Attachments

(Complete the following questions on a separate sheet(s) and number accordingly; see instructions)
For Classes I, II, III, (and other classes) complete and submit on a separate sheet(s) Attachments A--U (pp 2-6) as appropriate. Attach maps where required. List attachments by letter which are applicable and are included with your application. A B C D F H I K M O P Q R T U (V, W additional sections)

XIV. Certification

I certify under the penalty of law that I have personally examined and am familiar with the information submitted in this document and all attachments and that, based on my inquiry of those individuals immediately responsible for obtaining the information, I believe that the information is true, accurate, and complete. I am aware that there are significant penalties for submitting false information, including the possibility of fine and imprisonment. (Ref. 40 CFR 144.32)

A. Name and Title *(Type or Print)*: T.W. Easterly, Superintendent, Environmental Services Dept

B. Phone No. *(Area Code and No.)*: (219) 787-2712

C. Signature: T.W.E.

D. Date Signed: 10/14/97

UNITED STATES ENVIRONMENTAL PROTECTION AGENCY
WASHINGTON, DC 20460

IN-127-1W-0001

EPA PLUGGING AND ABANDONMENT PLAN

NAME AND ADDRESS OF FACILITY	NAME AND ADDRESS OF OWNER/OPERATOR
Bethlehem Steel Corporation Burns Harbor Plant P O Box 248, Chesterton, IN 46304	Bethlehem Steel Corporation Burns Harbor Plant P O Box 248, Chesterton, IN 46304

LOCATE WELL AND OUTLINE UNIT ON SECTION PLAT — 640 ACRES

N
W E
S

STATE: IN
COUNTY: Porter
PERMIT NUMBER: IN-127-1W-0001

SURFACE LOCATION DESCRIPTION
___ 1/4 of SW 1/4 of NE 1/4 of NW 1/4 of Section 28 Township 37N Range 6W

LOCATE WELL IN TWO DIRECTIONS FROM NEAREST LINES OF QUARTER SECTION AND DRILLING UNIT

Surface Location 1250 ft. from (N/S) N Line of quarter section
and 1600 ft. from (E/W) W Line of quarter section

TYPE OF AUTHORIZATION
- ☒ Individual Permit
- ☐ Area Permit
- ☐ Rule

Number of Wells 3

Lease Name

WELL ACTIVITY
- ☒ CLASS I
- ☐ CLASS II
  - ☐ Brine Disposal
  - ☐ Enhanced Recovery
  - ☐ Hydrocarbon Storage
- ☐ CLASS III

Well Number SPL Well No. 1

CASING AND TUBING RECORD AFTER PLUGGING

SIZE	WT(LB/FT)	TO BE PUT IN WELL (FT)	TO BE LEFT IN WELL (FT)	HOLE SIZE
20"		20	20	
10-3/4"		384	384	14-3/4"
7"	26		2204	8-3/4"

METHOD OF EMPLACEMENT OF CEMENT PLUGS
- ☒ The Balance Method
- ☐ The Dump Bailer Method
- ☐ The Two-Plug Method
- ☐ Other

CEMENTING TO PLUG AND ABANDON DATA:	PLUG #1	PLUG #2	PLUG #3	PLUG #4	PLUG #5	PLUG #6	PLUG #7
Size of Hole or Pipe in which Plug Will Be Placed (inches)	6.125	6.125	3.9	3.0	3.0	2.9	4.41
Depth to Bottom of Tubing or Drill Pipe (ft.)	4048	2787		2500			
Sacks of Cement To Be Used (each plug)	263	169*		168			
Slurry Volume To Be Pumped (cu. ft.)	310	169*		198			
Calculated Top of Plug (ft.)	2787	2500		3' below grade			
Measured Top of Plug (if tagged ft.)	2787	2500		3' below grade			
Slurry Wt. (Lb./Gal.)	16.4	12.6		15.6			
Type Cement or Other Material (Class III)	H	Resin		A			

LIST ALL OPEN HOLE AND/OR PERFORATED INTERVALS AND INTERVALS WHERE CASING WILL BE VARIED *(If any)*

From	To	From	To
2751	4048		

Estimated Cost to Plug Wells $156,400
* gallons

CERTIFICATION

I certify under the penalty of law that I have personally examined and am familiar with the information submitted in this document and all attachments and that, based on my inquiry of those individuals immediately responsible for obtaining the information, I believe that the information is true, accurate, and complete. I am aware that there are significant penalties for submitting false information, including the possibility of fine and imprisonment. (Ref. 40 CFR 144.32)

NAME AND OFFICIAL TITLE *(Please type or print)*	SIGNATURE	DATE SIGNED
T.W.Easterly, Superintendent Environmental Services Dept	TWE	10/14/97

UNITED STATES ENVIRONMENTAL PROTECTION AGENCY
WASHINGTON, DC 20460

EPA

IN-127-1W-0001

PLUGGING AND ABANDONMENT PLAN

NAME AND ADDRESS OF FACILITY
Bethlehem Steel Corporation
Burns Harbor Plant
P O Box 248, Chesterton, IN 46304

NAME AND ADDRESS OF OWNER/OPERATOR
Bethlehem Steel Corporation
Burns Harbor Plant
P O Box 248, Chesterton, IN 46304

LOCATE WELL AND OUTLINE UNIT ON SECTION PLAT — 640 ACRES

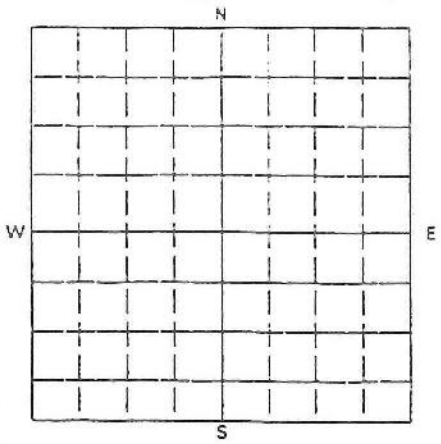

STATE: IN
COUNTY: Porter
PERMIT NUMBER: IN-127-1W-0001

SURFACE LOCATION DESCRIPTION
___ 1/4 of SW 1/4 of NE 1/4 of NW 1/4 of Section 28 Township 37N Range 6W

LOCATE WELL IN TWO DIRECTIONS FROM NEAREST LINES OF QUARTER SECTION AND DRILLING UNIT

Surface Location 1250 ft. from (N/S) N Line of quarter section
and 1600 ft. from (E/W) W Line of quarter section

TYPE OF AUTHORIZATION
- [x] Individual Permit
- [ ] Area Permit
- [ ] Rule

Number of Wells 3

Lease Name

WELL ACTIVITY
- [x] CLASS I
- [ ] CLASS II
  - [ ] Brine Disposal
  - [ ] Enhanced Recovery
  - [ ] Hydrocarbon Storage
- [ ] CLASS III

Well Number SPL Well No.1

CASING AND TUBING RECORD AFTER PLUGGING

SIZE	WT(LB/FT)	TO BE PUT IN WELL (FT)	TO BE LEFT IN WELL (FT)	HOLE SIZE
Continued from page 1 of 4				
5"	15	1540	1540	8 3/4"
5 1/2"	Fiberg1	1162	1162	9 3/4"

METHOD OF EMPLACEMENT OF CEMENT PLUGS
- [x] The Balance Method
- [ ] The Dump Bailer Method
- [ ] The Two-Plug Method
- [ ] Other

CEMENTING TO PLUG AND ABANDON DATA:	PLUG #1	PLUG #2	PLUG #3	PLUG #4	PLUG #5	PLUG #6	PLUG #
Size of Hole or Pipe in which Plug Will Be Placed (inches)							
Depth to Bottom of Tubing or Drill Pipe (ft.)							
Sacks of Cement To Be Used (each plug)							
Slurry Volume To Be Pumped (cu. ft.)							
Calculated Top of Plug (ft.)							
Measured Top of Plug (if tagged ft.)							
Slurry Wt. (Lb./Gal.)							
Type Cement or Other Material (Class III)							

LIST ALL OPEN HOLE AND/OR PERFORATED INTERVALS AND INTERVALS WHERE CASING WILL BE VARIED *(If any)*

From	To	From	To

Estimated Cost to Plug Wells

CERTIFICATION

I certify under the penalty of law that I have personally examined and am familiar with the information submitted in this document and all attachments and that, based on my inquiry of those individuals immediately responsible for obtaining the information, I believe that the information is true, accurate, and complete. I am aware that there are significant penalties for submitting false information, including the possibility of fine and imprisonment. (Ref. 40 CFR 144.32)

NAME AND OFFICIAL TITLE *(Please type or print)*	SIGNATURE	DATE SIGNED
T.W. Easterly, Superintendent Environmental Services Dept	T.W.E	10/14/97

UNITED STATES ENVIRONMENTAL PROTECTION AGENCY
WASHINGTON, DC 20460

IN-127-1W-0001

EPA

PLUGGING AND ABANDONMENT PLAN

NAME AND ADDRESS OF FACILITY	NAME AND ADDRESS OF OWNER/OPERATOR
Bethlehem Steel Corporation Burns Harbor Plant P O Box 248, Chesterton, IN 46304	Bethlehem Steel Corporation Burns Harbor Plant P O Box 248, Chesterton, IN 46304

LOCATE WELL AND OUTLINE UNIT ON SECTION PLAT — 640 ACRES

N
W E
S

STATE	COUNTY	PERMIT NUMBER
IN	Porter	IN-127-1W-0001

SURFACE LOCATION DESCRIPTION
___ 1/4 of SW 1/4 of NE 1/4 of NW 1/4 of Section 28 Township 37N Range 6W

LOCATE WELL IN TWO DIRECTIONS FROM NEAREST LINES OF QUARTER SECTION AND DRILLING UNIT

Surface Location 1250 ft. from (N/S) N Line of quarter section
and 1600 ft. from (E/W) W Line of quarter section

TYPE OF AUTHORIZATION

- ☒ Individual Permit
- ☐ Area Permit
- ☐ Rule

Number of Wells 3

Lease Name

WELL ACTIVITY

- ☒ CLASS I
- ☐ CLASS II
  - ☐ Brine Disposal
  - ☐ Enhanced Recovery
  - ☐ Hydrocarbon Storage
- ☐ CLASS III

Well Number SPL No. 1

CASING AND TUBING RECORD AFTER PLUGGING

SIZE	WT(LB/FT)	TO BE PUT IN WELL (FT)	TO BE LEFT IN WELL (FT)	HOLE SIZE
Continued from page 2 of 4				
3-1/2"	9.30	424	424	5"
3-1/2"	Fiberql	951	951	5"
4"	Hastelloy	36	36	5"

METHOD OF EMPLACEMENT OF CEMENT PLUGS

- ☒ The Balance Method
- ☐ The Dump Bailer Method
- ☐ The Two-Plug Method
- ☐ Other

CEMENTING TO PLUG AND ABANDON DATA:	PLUG #1	PLUG #2	PLUG #3	PLUG #4	PLUG #5	PLUG #6	PLUG #
Size of Hole or Pipe in which Plug Will Be Placed (inches)							
Depth to Bottom of Tubing or Drill Pipe (ft.)							
Sacks of Cement To Be Used (each plug)							
Slurry Volume To Be Pumped (cu. ft.)							
Calculated Top of Plug (ft.)							
Measured Top of Plug (if tagged ft.)							
Slurry Wt. (Lb./Gal.)							
Type Cement or Other Material (Class III)							

LIST ALL OPEN HOLE AND/OR PERFORATED INTERVALS AND INTERVALS WHERE CASING WILL BE VARIED *(If any)*

From	To	From	To

Estimated Cost to Plug Wells

CERTIFICATION

I certify under the penalty of law that I have personally examined and am familiar with the information submitted in this document and all attachments and that, based on my inquiry of those individuals immediately responsible for obtaining the information, I believe that the information is true, accurate, and complete. I am aware that there are significant penalties for submitting false information, including the possibility of fine and imprisonment. (Ref. 40 CFR 144.32)

NAME AND OFFICIAL TITLE *(Please type or print)*	SIGNATURE	DATE SIGNED
T.W.Easterly, Superintendent Environmental Services	T.W.E	10/14/97

ORIGINAL WELL CONSTRUCTION DURING OPERATION

Surface

Top Of Cement ____ (ft.)
Surface

Surface Casing 20 (ft.)

USDW Base 726 (ft.)

Top Of Cement ____ (ft.)
Surface

* Intermediate Casing 2204 (ft.)

Top Of Cement ____ (ft.)
Surface

Packer Depth 2709 (ft.)

Perforations: N/A

Long String Casing 2751 (ft.)

Hole Size 6.125 (in.)

* Depth 4048 (ft.)

** Add Any Additional Information
* May Not Apply

PLUGGING AND ABANDONMENT CONSTRUCTION

Surface

Top Plug Interval
3 (ft.) to
2500 (ft.)

* USDW Base Plug Interval
____ (ft.) to ____ (ft.)

* Intermediate Cut/Rip Point Plug Interval
____ (ft.) to ____ (ft.)

* Middle Plug Interval
2500 (ft.) to 2787 (ft.)

* Long String Cut/Rip Point Plug Interval
____ (ft.) to ____ (ft.)

Bottom Plug Depth
2787 (ft.) to 4048 (ft.)

* Mechanical Plug Depth ____ (ft.)

Surface Casing 20 (ft.)

USDW Base 726 (ft.)

* Intermediate Cut/Rip Depth ____ (ft.)

* Intermediate Casing 2204 (ft.

* Long String Cut/Rip Dept
____ (ft.)

Long String Casing 2751 (f

* Depth ____ (f

** Add Any Additional Information
* May Not Apply

LIST OF ALL OPEN AND/OR PERFORATED INTERVALS AND INTERVALS WHERE CASING WILL BE VARIED

Specify Open Hole/Perforations/Varied Casing	From	To	Formation Name
Open hole (6.125")	2751	4048	Lower Mt. Simon

Form Approved. OMB No. 2040-0042. Expires 6-30-98

EPA

United States Environmental Protection Agency

Underground Injection Control Permit Application

(Collected under the authority of the Safe Drinking Water Act. Sections 1421, 1422, 40 CFR 144)

I. EPA ID Number		T/A	C
U	IND003913423		

Read Attached Instructions Before Starting

For Official Use Only

Application approved mo	day	year	Date received mo	day	year	Permit Number	Well ID	FINDS Number

II. Owner Name and Address			III. Operator Name and Address		
Owner Name: Bethlehem Steel Corp. WAL No. 1			Operator Name: Bethlehem Steel Corp.		
Street Address: Burns Harbor Plant P O Box 248		Phone Number	Street Address: Burns Harbor Plant P O Box 248		Phone Number
City: Chesterton	State: IN	ZIP CODE: 46304	City: Chesterton	State: IN	ZIP CODE: 46304

IV. Commercial Facility	V. Ownership	VI. Legal Contact	VII. SIC Codes
[ ] Yes [X] No	[X] Private [ ] Federal [ ] Other	[X] Owner [ ] Operator	331

VIII. Well Status *(Mark "x")*

[X] A. Operating	Date Started mo	day	year	[ ] B. Modification/Conversion	[ ] C. Proposed
	09	18	69		

IX. Type of Permit Requested *(Mark "x" and specify if required)*

[X] A. Individual	[ ] B. Area	Number of Existing Wells	Number of Proposed Wells	Name(s) of field(s) or project(s)
		3	0	

X. Class and Type of Well *(see reverse)*

A. Classes(es) (enter codes(s)	B. Type(s) (enter codes(s)	C. If class is "other" or type is code 'x,' explain	D. Number of wells per type (if area permit)
1	W		

XI. Location of Well(s) or Approximate Center of Field or Project

Latitude Deg	Min	Sec	Longitude Deg	Min	Sec	Township and Range Sec	Twp	Range	1/4 Sec	Feet From	Line	Feet From	Line
41	37	45	87	08	13	30	37N	6W	SE	350	E	2300	S

XII. Indian Lands (Mark 'x')

[ ] Yes
[X] No

XIII. Attachments

(Complete the following questions on a separate sheet(s) and number accordingly; see instructions)
For Classes I, II, III, (and other classes) complete and submit on a separate sheet(s) Attachments A--U (pp 2-6) as appropriate. Attach maps where required. List attachments by letter which are applicable and are included with your application. A B C D F H I K M O P Q R T U (V, W additional sections)

XIV. Certification

I certify under the penalty of law that I have personally examined and am familiar with the information submitted in this document and all attachments and that, based on my inquiry of those individuals immediately responsible for obtaining the information, I believe that the information is true, accurate, and complete. I am aware that there are significant penalties for submitting false information, including the possibility of fine and imprisonment. (Ref. 40 CFR 144.32)

A. Name and Title *(Type or Print)*	B. Phone No. *(Area Code and No.)*
T.W. Easterly, Superintendent, Environmental Services Dept	(219) 787-2712
C. Signature: T.W.E.	D. Date Signed: 10/14/97

UNITED STATES ENVIRONMENTAL PROTECTION AGENCY
WASHINGTON, DC 20460

IN-127-1W-003

EPA PLUGGING AND ABANDONMENT PLAN

NAME AND ADDRESS OF FACILITY	NAME AND ADDRESS OF OWNER/OPERATOR
Bethlehem Steel Corporation Burns Harbor Plant P O Box 248, Chesterton, IN 46304	Bethlehem Steel Corporation Burns Harbor Plant P O Box 248, Chesterton, IN 46304

LOCATE WELL AND OUTLINE UNIT ON SECTION PLAT — 640 ACRES

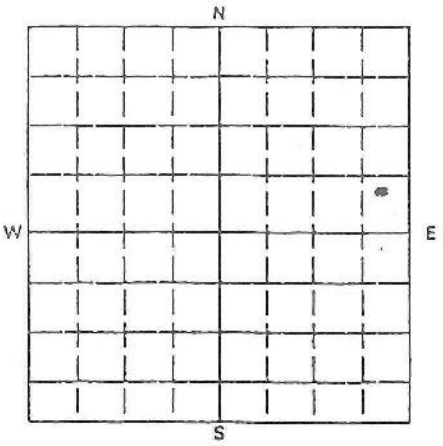

STATE	COUNTY	PERMIT NUMBER
IN	Porter	IN-127-1W-003

SURFACE LOCATION DESCRIPTION
___ 1/4 of NE 1/4 of NE 1/4 of SE 1/4 of Section 30 Township 37N Range 6W

LOCATE WELL IN TWO DIRECTIONS FROM NEAREST LINES OF QUARTER SECTION AND DRILLING UNIT

Surface Location 2300 ft. from (N/S) S Line of quarter section
and 350 ft. from (E/W) E Line of quarter section

TYPE OF AUTHORIZATION

- ☒ Individual Permit
- ☐ Area Permit
- ☐ Rule

Number of Wells 3

Lease Name

WELL ACTIVITY

- ☒ CLASS I
- ☐ CLASS II
  - ☐ Brine Disposal
  - ☐ Enhanced Recovery
  - ☐ Hydrocarbon Storage
- ☐ CLASS III

Well Number WAL Well No. 1

CASING AND TUBING RECORD AFTER PLUGGING

SIZE	WT(LB/FT)	TO BE PUT IN WELL (FT)	TO BE LEFT IN WELL (FT)	HOLE SIZE
13-3/8"	48	215	215	17-1/2"
9-5/8"	36	1437	1437	12-1/4"
7"	23	2530	2530	8-1/2"
5-1/2"	15.5	2730	2730	9"

METHOD OF EMPLACEMENT OF CEMENT PLUGS

- ☒ The Balance Method
- ☐ The Dump Bailer Method
- ☐ The Two-Plug Method
- ☐ Other

CEMENTING TO PLUG AND ABANDON DATA:	PLUG #1		PLUG #2		PLUG #5	PLUG #6	PLUG #
Size of Hole or Pipe in which Plug Will Be Placed (inches)	8-1/2, 12, 4.95		4.95				
Depth to Bottom of Tubing or Drill Pipe (ft.)	4274		2650				
Sacks of Cement To Be Used (each plug)	1276		300				
Slurry Volume To Be Pumped (cu. ft.)	1506		354				
Calculated Top of Plug (ft.)	2650		3				
Measured Top of Plug (if tagged ft.)	–		3				
Slurry Wt. (Lb./Gal.)	15.6		15.6				
Type Cement or Other Material (Class III)	A		A				

LIST ALL OPEN HOLE AND/OR PERFORATED INTERVALS AND INTERVALS WHERE CASING WILL BE VARIED *(If any)*

From	To	From	To

Estimated Cost to Plug Wells $90,800

CERTIFICATION

I certify under the penalty of law that I have personally examined and am familiar with the information submitted in this document and all attachments and that, based on my inquiry of those individuals immediately responsible for obtaining the information, I believe that the information is true, accurate, and complete. I am aware that there are significant penalties for submitting false information, including the possibility of fine and imprisonment. (Ref. 40 CFR 144.32)

NAME AND OFFICIAL TITLE *(Please type or print)*	SIGNATURE	DATE SIGNED
T.W.Easterly, Superintendent Environmental Services	T.W.E	10/14/92

EPA Form 7520-14

WAL 1

ORIGINAL WELL CONSTRUCTION DURING OPERATION

Surface

Top Of Cement ____ (ft.)
Surface

Top Of Cement ____ (ft.)
Surface

Top Of Cement ____ (ft.)
Surface

Perforations: ____

Hole Size 12 (in.)

Surface Casing 215 (ft.)

USDW Base 726 (ft.)

* Intermediate Casing 2530 (ft.)

Packer Depth 2698 (ft.)

Long String Casing 2730 (ft.)

* Depth 4274 (ft.)

** Add Any Additional Information
* May Not Apply

PLUGGING AND ABANDONMENT CONSTRUCTION

Surface

Top Plug Interval
3 (ft.) to
2650 (ft.)

* USDW Base Plug Interval
____ (ft.) to ____ (ft.)

* Intermediate Cut/Rip Point Plug Interval
____ (ft.) to ____ (ft.)

* Middle Plug Interval
____ (ft.) to ____ (ft.)

* Long String Cut/Rip Point Plug Interval
____ (ft.) to ____ (ft.)

Bottom Plug Depth
2650 (ft.) to 4274 (ft.)

* Mechanical Plug Depth 2650 (ft.)

Surface Casing 215 (f

USDW Base 726 (f

* Intermediate Cut/Rip Depth ____ (f

* Intermediate Casing 2530 (

* Long Strin Cut/Rip De
____ (ft.)

Long String Casing ____

* Depth ____
2730 ft

** Add Any Additional Information
* May Not Apply

LIST OF ALL OPEN AND/OR PERFORATED INTERVALS AND INTERVALS WHERE CASING WILL BE VARIED

Specify Open Hole/Perforations/Varied Casing	From	To	Formation Name
f n hole (12")	4274	2730	Lower Mt. Simon

Form Approved. OMB No. 2040-0042. Expires 6-30-98

EPA

United States Environmental Protection Agency

Underground Injection Control Permit Application

(Collected under the authority of the Safe Drinking Water Act. Sections 1421, 1422, 40 CFR 144)

I. EPA ID Number

		T/A	C
U	IND003913423		

Read Attached Instructions Before Starting

For Official Use Only

Application approved mo	day	year	Date received mo	day	year	Permit Number	Well ID	FINDS Number

II. Owner Name and Address

Owner Name: Bethlehem Steel Corp WAL No. 2

Street Address: Burns Harbor Plant, P O Box 248 | Phone Number:

City: Chesterton | State: IN | ZIP CODE: 46304

III. Operator Name and Address

Operator Name: Bethlehem Steel Corporation

Street Address: Burns Harbor Plant, P O Box 248 | Phone Number:

City: Chesterton | State: IN | ZIP CODE: 46304

IV. Commercial Facility

- [ ] Yes
- [x] No

V. Ownership

- [x] Private
- [ ] Federal
- [ ] Other

VI. Legal Contact

- [x] Owner
- [ ] Operator

VII. SIC Codes

331

VIII. Well Status *(Mark "x")*

- [x] A. Operating — Date Started: mo 09, day 18, year 69
- [ ] B. Modification/Conversion
- [ ] C. Proposed

IX. Type of Permit Requested *(Mark "x" and specify if required)*

- [x] A. Individual
- [ ] B. Area

Number of Existing Wells	Number of Proposed Wells	Name(s) of field(s) or project(s)
3	0	

X. Class and Type of Well *(see reverse)*

A. Classes(es) (enter codes(s)	B. Type(s) (enter codes(s)	C. If class is "other" or type is code 'x,' explain	D. Number of wells per type (if area permit)
1	W		

XI. Location of Well(s) or Approximate Center of Field or Project

Latitude Deg	Min	Sec	Longitude Deg	Min	Sec	Township and Range Sec	Twp	Range	1/4 Sec	Feet From	Line	Feet From	Line
41	37	44	87	08	03	29	37N	6W	SW	470	W	2200	S

XII. Indian Lands (Mark 'x')

- [ ] Yes
- [x] No

XIII. Attachments

(Complete the following questions on a separate sheet(s) and number accordingly; see instructions)
For Classes I, II, III, (and other classes) complete and submit on a separate sheet(s) Attachments A--U (pp 2-6) as appropriate. Attach maps where required. List attachments by letter which are applicable and are included with your application. A B C D F H I K M O P Q R T U (V, W additional sections)

XIV. Certification

I certify under the penalty of law that I have personally examined and am familiar with the information submitted in this document and all attachments and that, based on my inquiry of those individuals immediately responsible for obtaining the information, I believe that the information is true, accurate, and complete. I am aware that there are significant penalties for submitting false information, including the possibility of fine and imprisonment. (Ref. 40 CFR 144.32)

A. Name and Title *(Type or Print)*: T.W. Easterly, Superintendent, Environmental Services Dept

B. Phone No. *(Area Code and No.)*: (219) 787-2712

C. Signature: T.W.E.

D. Date Signed: 10/14/97

UNITED STATES ENVIRONMENTAL PROTECTION AGENCY
WASHINGTON, DC 20460

IN-127-1W-004

EPA PLUGGING AND ABANDONMENT PLAN

NAME AND ADDRESS OF FACILITY	NAME AND ADDRESS OF OWNER/OPERATOR
Bethlehem Steel Corporation Burns Harbor Plant P O Box 248, Chesterton, IN 46304	Bethlehem Steel Corporation Burns Harbor Plant P O Box 248, Chesterton, IN 46304

LOCATE WELL AND OUTLINE UNIT ON SECTION PLAT — 640 ACRES

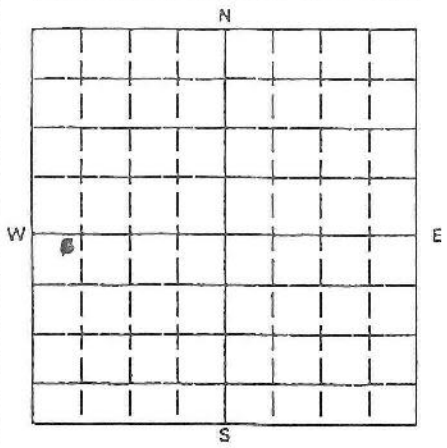

STATE	COUNTY	PERMIT NUMBER
IN	Porter	IN-127-1W-004

SURFACE LOCATION DESCRIPTION
___ 1/4 of NW 1/4 of NW 1/4 of SW 1/4 of Section 29 Township 37N Range 6W

LOCATE WELL IN TWO DIRECTIONS FROM NEAREST LINES OF QUARTER SECTION AND DRILLING UNIT

Surface Location 2200 ft. from (N/S) S Line of quarter section
and 470 ft. from (E/W) W Line of quarter section

TYPE OF AUTHORIZATION

- ☒ Individual Permit
- ☐ Area Permit
- ☐ Rule

Number of Wells 3

WELL ACTIVITY

- ☒ CLASS I
- ☐ CLASS II
  - ☐ Brine Disposal
  - ☐ Enhanced Recovery
  - ☐ Hydrocarbon Storage
- ☐ CLASS III

Lease Name

Well Number WAL Well No. 2

CASING AND TUBING RECORD AFTER PLUGGING

SIZE	WT(LB/FT)	TO BE PUT IN WELL (FT)	TO BE LEFT IN WELL (FT)	HOLE SIZE
13-3/8"	48	230	230	17-1/2"
9-5/8"	36	1435	1435	12-1/4"
7"	23	2520	2520	8-1/4"
5-1/2"	15.5	2726	2734	9"

METHOD OF EMPLACEMENT OF CEMENT PLUGS

- ☒ The Balance Method
- ☐ The Dump Bailer Method
- ☐ The Two-Plug Method
- ☐ Other

CEMENTING TO PLUG AND ABANDON DATA:	PLUG #1		PLUG # 2	PLUG #4	PLUG #5	PLUG #6	PLUG #
Size of Hole or Pipe in which Plug Will Be Placed (inches)	8-1/2, 12, 4.95		4.95				
Depth to Bottom of Tubing or Drill Pipe (ft.)	4282		2650				
Sacks of Cement To Be Used (each plug)	1278		300				
Slurry Volume To Be Pumped (cu. ft.)	1508		354				
Calculated Top of Plug (ft.)	2650		3				
Measured Top of Plug (if tagged ft.)	–		3				
Slurry Wt. (Lb./Gal.)	15.6		15.6				
Type Cement or Other Material (Class III)	A		A				

LIST ALL OPEN HOLE AND/OR PERFORATED INTERVALS AND INTERVALS WHERE CASING WILL BE VARIED *(If any)*

From	To	From	To

Estimated Cost to Plug Wells $90,800

CERTIFICATION

I certify under the penalty of law that I have personally examined and am familiar with the information submitted in this document and all attachments and that, based on my inquiry of those individuals immediately responsible for obtaining the information, I believe that the information is true, accurate, and complete. I am aware that there are significant penalties for submitting false information, including the possibility of fine and imprisonment. (Ref. 40 CFR 144.32)

NAME AND OFFICIAL TITLE *(Please type or print)*	SIGNATURE	DATE SIGNED
T.W.Easterly, Superintendent Environmental Services Dept	T.W.E	10/14/97

EPA Form 7520-14

WAL 2

ORIGINAL WELL CONSTRUCTION DURING OPERATION

Surface

Top Of Cement ____ (ft.)
Surface

Surface Casing 230 (ft.)

USDW Base 726 (ft.)

Top Of Cement ____ (ft.)
Surface

* Intermediate Casing 1435 (ft.)

Top Of Cement ____ (ft.)
Surface

Packer Depth 2703 (ft.)

Perforations: ____

Long String Casing ____ (ft.)
2734

Hole Size 12 (in.)

* Depth 4282 (ft.)

** Add Any Additional Information
* May Not Apply

PLUGGING AND ABANDONMENT CONSTRUCTION

Surface

Top Plug Interval
3 (ft.) to
2650 (ft.)

* USDW Base Plug Interval
____ (ft.) to ____ (ft.)

* Intermediate Cut/Rip Point Plug Interval
____ (ft.) to ____ (ft.)

* Middle Plug Interval
____ (ft.) to ____ (ft.)

* Long String Cut/Rip Point Plug Interval
____ (ft.) to ____ (ft.)

Bottom Plug Depth
2650 (ft.) to 4274 (ft.)

* Mechanical Plug Depth 2650 (ft.)

Surface Casing 230 (f

USDW Base 726 (

* Intermediate Cut/Rip Depth ____ (

* Intermediate Casing 1435

* Long Stri Cut/Rip D
____ (ft.)

Long String Casing 2734

* Depth ____

** Add Any Additional Information
* May Not Apply

LIST OF ALL OPEN AND/OR PERFORATED INTERVALS AND INTERVALS WHERE CASING WILL BE VARIED

Specify Open Hole/Perforations/Varied Casing	From	To	Formation Name
Open hole (12")	4282'	2734'	Lower Mt. Simon

Form Approved. OMB No. 2040-0042. Expires 6-30-98

EPA

United States Environmental Protection Agency

Underground Injection Control Permit Application

(Collected under the authority of the Safe Drinking Water Act. Sections 1421, 1422, 40 CFR 144)

I. EPA ID Number

		T/A	C
U	IND003913423		

Read Attached Instructions Before Starting

For Official Use Only

Application approved mo	day	year	Date received mo	day	year	Permit Number	Well ID	FINDS Number

II. Owner Name and Address

Owner Name: Bethlehem Steel Corp. WPL No. 1

Street Address: Burns Harbor Plant, P O Box 248 | Phone Number:

City: Chesterton | State: IN | ZIP CODE: 46304

III. Operator Name and Address

Operator Name: Bethlehem Steel Corporation

Street Address: Burns Harbor Plant, P O Box 248 | Phone Number:

City: Chesterton | State: IN | ZIP CODE: 46304

IV. Commercial Facility

[ ] Yes
[X] No

V. Ownership

[X] Private
[ ] Federal
[ ] Other

VI. Legal Contact

[X] Owner
[ ] Operator

VII. SIC Codes

331

VIII. Well Status *(Mark "x")*

[X] A. Operating — Date Started: mo 03, day 30, year 68

[ ] B. Modification/Conversion

[ ] C. Proposed

IX. Type of Permit Requested *(Mark "x" and specify if required)*

[X] A. Individual [ ] B. Area

Number of Existing Wells	Number of Proposed Wells	Name(s) of field(s) or project(s)
3	0	

X. Class and Type of Well *(see reverse)*

A. Classes(es) (enter codes(s)	B. Type(s) (enter codes(s)	C. If class is "other" or type is code 'x,' explain	D. Number of wells per type (if area permit)
1	W		

XI. Location of Well(s) or Approximate Center of Field or Project

Latitude Deg	Min	Sec	Longitude Deg	Min	Sec	Township and Range Sec	Twp	Range	1/4 Sec	Feet From	Line	Feet From	Line
41	37	58	87	07	08	28	37N	6W	NW	1600	W	1250	N

XII. Indian Lands (Mark 'x')

[ ] Yes
[X] No

XIII. Attachments

(Complete the following questions on a separate sheet(s) and number accordingly; see instructions)
For Classes I, II, III, (and other classes) complete and submit on a separate sheet(s) Attachments A--U (pp 2-6) as appropriate. Attach maps where required. List attachments by letter which are applicable and are included with your application. A B C D F H I K M O P Q R T U (V, W additional sections)

XIV. Certification

I certify under the penalty of law that I have personally examined and am familiar with the information submitted in this document and all attachments and that, based on my inquiry of those individuals immediately responsible for obtaining the information, I believe that the information is true, accurate, and complete. I am aware that there are significant penalties for submitting false information, including the possibility of fine and imprisonment. (Ref. 40 CFR 144.32)

A. Name and Title *(Type or Print)*: T.W. Easterly, Superintendent, Environmental Services Dept

B. Phone No. *(Area Code and No.)*: (219) 787-2712

C. Signature: T.W.E.

D. Date Signed: 10/14/97

UNITED STATES ENVIRONMENTAL PROTECTION AGENCY
WASHINGTON, DC 20460

IN-127-1W-0001

EPA PLUGGING AND ABANDONMENT PLAN

NAME AND ADDRESS OF FACILITY	NAME AND ADDRESS OF OWNER/OPERATOR
Bethlehem Steel Corporation Burns Harbor Plant P O Box 248, Chesterton, IN 46304	Bethlehem Steel Corporation Burns Harbor Plant P O Box 248, Chesterton, IN 46304

LOCATE WELL AND OUTLINE UNIT ON SECTION PLAT — 640 ACRES

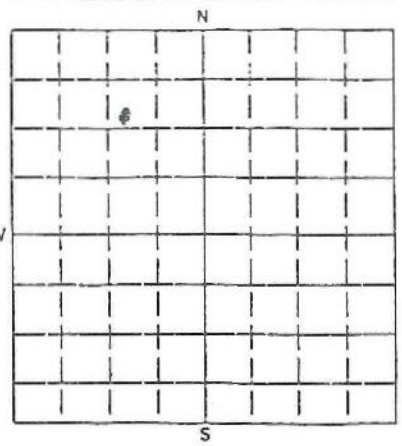

STATE: IN
COUNTY: Porter
PERMIT NUMBER: IN-127-1W-0001

SURFACE LOCATION DESCRIPTION
_ 1/4 of SW 1/4 of NE 1/4 of NW 1/4 of Section 28 Township 37N Range 6W

LOCATE WELL IN TWO DIRECTIONS FROM NEAREST LINES OF QUARTER SECTION AND DRILLING UNIT

Surface Location 1250 ft. from (N/S) N Line of quarter section
and 1600 ft. from (E/W) W Line of quarter section

TYPE OF AUTHORIZATION
- ☒ Individual Permit
- ☐ Area Permit
- ☐ Rule

Number of Wells 3

Lease Name

WELL ACTIVITY
- ☒ CLASS I
- ☐ CLASS II
  - ☐ Brine Disposal
  - ☐ Enhanced Recovery
  - ☐ Hydrocarbon Storage
- ☐ CLASS III

Well Number SPL Well No. 1

CASING AND TUBING RECORD AFTER PLUGGING

SIZE	WT(LB/FT)	TO BE PUT IN WELL (FT)	TO BE LEFT IN WELL (FT)	HOLE SIZE
20"		20	20	
10-3/4"		384	384	14-3/4"
7"	26		2204	8-3/4"

METHOD OF EMPLACEMENT OF CEMENT PLUGS
- ☒ The Balance Method
- ☐ The Dump Bailer Method
- ☐ The Two-Plug Method
- ☐ Other

CEMENTING TO PLUG AND ABANDON DATA:	PLUG #1	PLUG #2	PLUG #3	PLUG #4	PLUG #5	PLUG #7
Size of Hole or Pipe in which Plug Will Be Placed (inches)	6.125	6.125	3.9,3.0	3.0,2.9,4.41		
Depth to Bottom of Tubing or Drill Pipe (ft.)	4048	2787		2500		
Sacks of Cement To Be Used (each plug)	263	169*		168		
Slurry Volume To Be Pumped (cu. ft.)	310	169*		198		
Calculated Top of Plug (ft.)	2787	2500		3'below grade		
Measured Top of Plug (if tagged ft.)	2787	2500		3'below grade		
Slurry Wt. (Lb./Gal.)	16.4	12.6		15.6		
Type Cement or Other Material (Class III)	H	Resin		A		

LIST ALL OPEN HOLE AND/OR PERFORATED INTERVALS AND INTERVALS WHERE CASING WILL BE VARIED *(If any)*

From	To	From	To
2751	4048		

Estimated Cost to Plug Wells $156,400

* gallons

CERTIFICATION

I certify under the penalty of law that I have personally examined and am familiar with the information submitted in this document and all attachments and that, based on my inquiry of those individuals immediately responsible for obtaining the information, I believe that the information is true, accurate, and complete. I am aware that there are significant penalties for submitting false information, including the possibility of fine and imprisonment. (Ref. 40 CFR 144.32)

NAME AND OFFICIAL TITLE *(Please type or print)*	SIGNATURE	DATE SIGNED
T.W.Easterly, Superintendent Environmental Services Dept	T.W.E	10/14/97

EPA Form 7520-14

UNITED STATES ENVIRONMENTAL PROTECTION AGENCY
WASHINGTON, DC 20460

EPA

IN-127-1W-0001

PLUGGING AND ABANDONMENT PLAN

NAME AND ADDRESS OF FACILITY
Bethlehem Steel Corporation
Burns Harbor Plant
P O Box 248, Chesterton, IN 46304

NAME AND ADDRESS OF OWNER/OPERATOR
Bethlehem Steel Corporation
Burns Harbor Plant
P O Box 248, Chesterton, IN 46304

LOCATE WELL AND OUTLINE UNIT ON SECTION PLAT — 640 ACRES

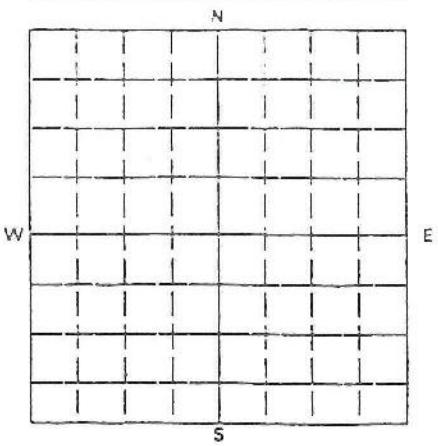

STATE: IN
COUNTY: Porter
PERMIT NUMBER: IN-127-1W-0001

SURFACE LOCATION DESCRIPTION
___ 1/4 of SW 1/4 of NE 1/4 of NW 1/4 of Section 28 Township 37N Range 6W

LOCATE WELL IN TWO DIRECTIONS FROM NEAREST LINES OF QUARTER SECTION AND DRILLING UNIT
Surface Location 1250 ft. from (N/S) N Line of quarter section
and 1600 ft. from (E/W) W Line of quarter section

TYPE OF AUTHORIZATION
- [x] Individual Permit
- [ ] Area Permit
- [ ] Rule

Number of Wells 3

Lease Name

WELL ACTIVITY
- [x] CLASS I
- [ ] CLASS II
  - [ ] Brine Disposal
  - [ ] Enhanced Recovery
  - [ ] Hydrocarbon Storage
- [ ] CLASS III

Well Number SPL Well No.1

CASING AND TUBING RECORD AFTER PLUGGING

SIZE	WT(LB/FT)	TO BE PUT IN WELL (FT)	TO BE LEFT IN WELL (FT)	HOLE SIZE
Continued from page 1 of 4				
5"	15	1540	1540	8 3/4"
5 1/2" Fibergl		1162	1162	9 3/4"

METHOD OF EMPLACEMENT OF CEMENT PLUGS
- [x] The Balance Method
- [ ] The Dump Bailer Method
- [ ] The Two-Plug Method
- [ ] Other

CEMENTING TO PLUG AND ABANDON DATA:	PLUG #1	PLUG #2	PLUG #3	PLUG #4	PLUG #5	PLUG #6	PLUG #
Size of Hole or Pipe in which Plug Will Be Placed (inches)							
Depth to Bottom of Tubing or Drill Pipe (ft.)							
Sacks of Cement To Be Used (each plug)							
Slurry Volume To Be Pumped (cu. ft.)							
Calculated Top of Plug (ft.)							
Measured Top of Plug (if tagged ft.)							
Slurry Wt. (Lb./Gal.)							
Type Cement or Other Material (Class III)							

LIST ALL OPEN HOLE AND/OR PERFORATED INTERVALS AND INTERVALS WHERE CASING WILL BE VARIED *(If any)*

From	To	From	To

Estimated Cost to Plug Wells

CERTIFICATION

I certify under the penalty of law that I have personally examined and am familiar with the information submitted in this document and all attachments and that, based on my inquiry of those individuals immediately responsible for obtaining the information, I believe that the information is true, accurate, and complete. I am aware that there are significant penalties for submitting false information, including the possibility of fine and imprisonment. (Ref. 40 CFR 144.32)

NAME AND OFFICIAL TITLE *(Please type or print)*	SIGNATURE	DATE SIGNED
T.W. Easterly, Superintendent Environmental Services Dept	T.W. E	10/14/97

EPA Form 7520-14

UNITED STATES ENVIRONMENTAL PROTECTION AGENCY
WASHINGTON, DC 20460

IN-127-1W-0001

EPA

PLUGGING AND ABANDONMENT PLAN

NAME AND ADDRESS OF FACILITY
Bethlehem Steel Corporation
Burns Harbor Plant
P O Box 248, Chesterton, IN 46304

NAME AND ADDRESS OF OWNER/OPERATOR
Bethlehem Steel Corporation
Burns Harbor Plant
P O Box 248, Chesterton, IN 46304

LOCATE WELL AND OUTLINE UNIT ON SECTION PLAT — 640 ACRES

N
W E
S

STATE: IN
COUNTY: Porter
PERMIT NUMBER: IN-127-1W-0001

SURFACE LOCATION DESCRIPTION
___ 1/4 of SW 1/4 of NE 1/4 of NW 1/4 of Section 28 Township 37N Range 6W

LOCATE WELL IN TWO DIRECTIONS FROM NEAREST LINES OF QUARTER SECTION AND DRILLING UNIT

Surface Location 1250 ft. from (N/S) N Line of quarter section
and 1600 ft. from (E/W) W Line of quarter section

TYPE OF AUTHORIZATION
- ☒ Individual Permit
- ☐ Area Permit
- ☐ Rule

Number of Wells 3

Lease Name

WELL ACTIVITY
- ☒ CLASS I
- ☐ CLASS II
  - ☐ Brine Disposal
  - ☐ Enhanced Recovery
  - ☐ Hydrocarbon Storage
- ☐ CLASS III

Well Number SPL No. 1

CASING AND TUBING RECORD AFTER PLUGGING

SIZE	WT(LB/FT)	TO BE PUT IN WELL (FT)	TO BE LEFT IN WELL (FT)	HOLE SIZE
Continued from page 2 of 4				
3-1/2"	9.30	424	424	5"
3-1/2"	Fibergl	951	951	5"
4"	Hastelloy	36	36	5"

METHOD OF EMPLACEMENT OF CEMENT PLUGS
- ☒ The Balance Method
- ☐ The Dump Bailer Method
- ☐ The Two-Plug Method
- ☐ Other

CEMENTING TO PLUG AND ABANDON DATA:	PLUG #1	PLUG #2	PLUG #3	PLUG #4	PLUG #5	PLUG #6	PLUG #
Size of Hole or Pipe in which Plug Will Be Placed (inches)							
Depth to Bottom of Tubing or Drill Pipe (ft.)							
Sacks of Cement To Be Used (each plug)							
Slurry Volume To Be Pumped (cu. ft.)							
Calculated Top of Plug (ft.)							
Measured Top of Plug (if tagged ft.)							
Slurry Wt. (Lb./Gal.)							
Type Cement or Other Material (Class III)							

LIST ALL OPEN HOLE AND/OR PERFORATED INTERVALS AND INTERVALS WHERE CASING WILL BE VARIED *(If any)*

From	To	From	To

Estimated Cost to Plug Wells

CERTIFICATION

I certify under the penalty of law that I have personally examined and am familiar with the information submitted in this document and all attachments and that, based on my inquiry of those individuals immediately responsible for obtaining the information, I believe that the information is true, accurate, and complete. I am aware that there are significant penalties for submitting false information, including the possibility of fine and imprisonment. (Ref. 40 CFR 144.32)

NAME AND OFFICIAL TITLE *(Please type or print)*	SIGNATURE	DATE SIGNED
T.W.Easterly, Superintendent Environmental Services	[signature]	10/14/92

EPA Form 7520-14

UNITED STATES ENVIRONMENTAL PROTECTION AGENCY
WASHINGTON, DC 20460

IN-127-1W-003

EPA

PLUGGING AND ABANDONMENT PLAN

NAME AND ADDRESS OF FACILITY	NAME AND ADDRESS OF OWNER/OPERATOR
Bethlehem Steel Corporation Burns Harbor Plant P O Box 248, Chesterton, IN 46304	Bethlehem Steel Corporation Burns Harbor Plant P O Box 248, Chesterton, IN 46304

LOCATE WELL AND OUTLINE UNIT ON SECTION PLAT — 640 ACRES

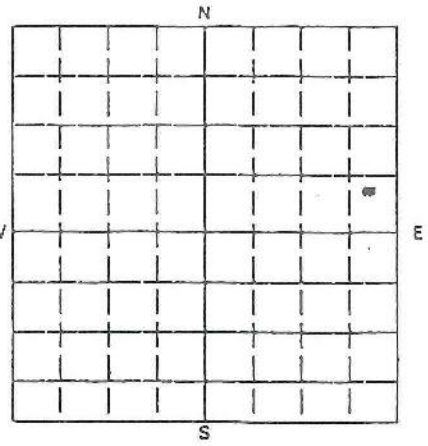

STATE	COUNTY	PERMIT NUMBER
IN	Porter	IN-127-1W-003

SURFACE LOCATION DESCRIPTION
___ 1/4 of NE 1/4 of NE 1/4 of SE 1/4 of Section 30 Township 37N Range 6W

LOCATE WELL IN TWO DIRECTIONS FROM NEAREST LINES OF QUARTER SECTION AND DRILLING UNIT

Surface Location 2300 ft. from (N/S) S Line of quarter section
and 350 ft. from (E/W) E Line of quarter section

TYPE OF AUTHORIZATION
- [x] Individual Permit
- [ ] Area Permit
- [ ] Rule

Number of Wells 3

WELL ACTIVITY
- [x] CLASS I
- [ ] CLASS II
  - [ ] Brine Disposal
  - [ ] Enhanced Recovery
  - [ ] Hydrocarbon Storage
- [ ] CLASS III

Lease Name

Well Number WAL Well No. 1

CASING AND TUBING RECORD AFTER PLUGGING

SIZE	WT(LB/FT)	TO BE PUT IN WELL (FT)	TO BE LEFT IN WELL (FT)	HOLE SIZE
13-3/8"	48	215	215	17-1/2"
9-5/8"	36	1437	1437	12-1/4"
7"	23	2530	2530	8-1/2"
5-1/2"	15.5	2730	2730	9"

METHOD OF EMPLACEMENT OF CEMENT PLUGS
- [x] The Balance Method
- [ ] The Dump Bailer Method
- [ ] The Two-Plug Method
- [ ] Other

CEMENTING TO PLUG AND ABANDON DATA:	PLUG #1		PLUG #2		PLUG #5	PLUG #6	PLUG
Size of Hole or Pipe in which Plug Will Be Placed (inches)	8-1/2, 12.4.95		4.95				
Depth to Bottom of Tubing or Drill Pipe (ft.)	4274		2650				
Sacks of Cement To Be Used (each plug)	1276		300				
Slurry Volume To Be Pumped (cu. ft.)	1506		354				
Calculated Top of Plug (ft.)	2650		3				
Measured Top of Plug (if tagged ft.)	–		3				
Slurry Wt. (Lb./Gal.)	15.6		15.6				
Type Cement or Other Material (Class III)	A		A				

LIST ALL OPEN HOLE AND/OR PERFORATED INTERVALS AND INTERVALS WHERE CASING WILL BE VARIED *(If any)*

From	To	From	To

Estimated Cost to Plug Wells $90,800

CERTIFICATION

I certify under the penalty of law that I have personally examined and am familiar with the information submitted in this document and all attachments and that, based on my inquiry of those individuals immediately responsible for obtaining the information, I believe that the information is true, accurate, and complete. I am aware that there are significant penalties for submitting false information, including the possibility of fine and imprisonment. (Ref. 40 CFR 144.32)

NAME AND OFFICIAL TITLE *(Please type or print)*	SIGNATURE	DATE SIGNED
T.W.Easterly, Superintendent Environmental Services	T.W.E	10/14/92

EPA Form 7520-14

WAL 1

ORIGINAL WELL CONSTRUCTION DURING OPERATION

Surface

Top Of Cement ____ (ft.)
Surface

Top Of Cement ____ (ft.)
Surface

Top Of Cement ____ (ft.)
Surface

Perforations: ____

Hole Size 12 (in.)

Surface Casing 215 (ft.)

USDW Base 726 (ft.)

* Intermediate Casing 2530 (ft.)

Packer Depth 2698 (ft.)

Long String Casing 2730 (ft.)

* Depth 4274 (ft.)

** Add Any Additional Information
* May Not Apply

PLUGGING AND ABANDONMENT CONSTRUCTION

Surface

Top Plug Interval
3 (ft.) to
2650 (ft.)

* USDW Base Plug Interval
____ (ft.) to ____ (ft.)

* Intermediate Cut/Rip Point Plug Interval
____ (ft.) to ____ (ft.)

* Middle Plug Interval
____ (ft.) to ____ (ft.)

* Long String Cut/Rip Point Plug Interval
____ (ft.) to ____ (ft.)

Bottom Plug Depth
2650 (ft.) to 4274 (ft.)

* Mechanical Plug Depth 2650 (ft.)

Surface Casing 215 (ft

USDW Base 726 (f

* Intermediate Cut/Rip Depth ____ (f

* Intermediate Casing 2530 (

* Long Strin Cut/Rip De
____ (ft.)

Long String Casing ____

* Depth ____
2730 ft

** Add Any Additional Information
* May Not Apply

LIST OF ALL OPEN AND/OR PERFORATED INTERVALS AND INTERVALS WHERE CASING WILL BE VARIED

Specify Open Hole/Perforations/Varied Casing	From	To	Formation Name
Open hole (12")	4274	2730	Lower Mt. Simon

Form Approved. OMB No. 2040-0042. Expires 6-30-98

EPA

United States Environmental Protection Agency

Underground Injection Control Permit Application

(Collected under the authority of the Safe Drinking Water Act. Sections 1421, 1422, 40 CFR 144)

I. EPA ID Number		T/A	C
U	IND003913423		

Read Attached Instructions Before Starting

For Official Use Only

Application approved mo	day	year	Date received mo	day	year	Permit Number	Well ID	FINDS Number

II. Owner Name and Address			III. Operator Name and Address		
Owner Name: Bethlehem Steel Corp WAL No. 2			Operator Name: Bethlehem Steel Corporation		
Street Address: Burns Harbor Plant, P O Box 248		Phone Number	Street Address: Burns Harbor Plant, P O Box 248		Phone Number
City: Chesterton	State: IN	ZIP CODE: 46304	City: Chesterton	State: TN	ZIP CODE: 46304

IV. Commercial Facility	V. Ownership	VI. Legal Contact	VII. SIC Codes
[ ] Yes [X] No	[X] Private [ ] Federal [ ] Other	[X] Owner [ ] Operator	331

VIII. Well Status *(Mark "x")*

[X] A. Operating	Date Started mo	day	year	[ ] B. Modification/Conversion	[ ] C. Proposed
	09	18	69		

IX. Type of Permit Requested *(Mark "x" and specify if required)*

[X] A. Individual	[ ] B. Area	Number of Existing Wells	Number of Proposed Wells	Name(s) of field(s) or project(s)
		3	0	

X. Class and Type of Well *(see reverse)*

A. Classes(es) (enter codes(s)	B. Type(s) (enter codes(s)	C. If class is "other" or type is code 'x,' explain	D. Number of wells per type (if area permit)
1	W		

XI. Location of Well(s) or Approximate Center of Field or Project

Latitude Deg	Min	Sec	Longitude Deg	Min	Sec	Township and Range Sec	Twp	Range	1/4 Sec	Feet From	Line	Feet From	Line
41	37	44	87	08	03	29	37N	6W	SW	470	W	2200	S

XII. Indian Lands (Mark 'x')

[ ] Yes
[X] No

XIII. Attachments

(Complete the following questions on a separate sheet(s) and number accordingly; see instructions)
For Classes I, II, III, (and other classes) complete and submit on a separate sheet(s) Attachments A--U (pp 2-6) as appropriate. Attach maps where required. List attachments by letter which are applicable and are included with your application. A B C D F H I K M O P Q R T U (V, W additional sections)

XIV. Certification

I certify under the penalty of law that I have personally examined and am familiar with the information submitted in this document and all attachments and that, based on my inquiry of those individuals immediately responsible for obtaining the information, I believe that the information is true, accurate, and complete. I am aware that there are significant penalties for submitting false information, including the possibility of fine and imprisonment. (Ref. 40 CFR 144.32)

A. Name and Title *(Type or Print)*	B. Phone No. *(Area Code and No.)*
T.W.Easterly, Superintendent, Environmental Services Dept	(219) 787-2712
C. Signature: T.W.	D. Date Signed: 10/14/97

ORIGINAL WELL CONSTRUCTION DURING OPERATION

Surface

Top Of Cement ____ (ft.)
Surface

Surface Casing 20 (ft.)

USDW Base 726 (ft.)

Top Of Cement ____ (ft.)
Surface

* Intermediate Casing 2204 (ft.)

Top Of Cement ____ (ft.)
Surface

Packer Depth 2709 (ft.)

Perforations: N/A

Long String Casing: 2751 (ft.)

Hole Size 6.125 (in.)

* Depth 4048 (ft.)

** Add Any Additional Information
* May Not Apply

PLUGGING AND ABANDONMENT CONSTRUCTION

Surface

Top Plug Interval
3 (ft.) to
2500 (ft.)

Surface Casing 20 (ft.)

* USDW Base Plug Interval
____ (ft.) to ____ (ft.)

USDW Base 726 (ft.)

* Intermediate Cut/Rip Point Plug Interval
____ (ft.) to ____ (ft.)

* Intermediate Cut/Rip Depth ____ (ft.)

* Intermediate Casing 2204 (ft.

* Middle Plug Interval
2500 (ft.) to 2787 (ft.)

* Long String Cut/Rip Point Plug Interval
____ (ft.) to ____ (ft.)

* Long String Cut/Rip Dept
____ (ft.)

Bottom Plug Depth
2787 (ft.) to 4048 (ft.)

* Mechanical Plug Depth ____ (ft.)

Long String Casing 2751 (f

* Depth ____ (f

** Add Any Additional Information
* May Not Apply

LIST OF ALL OPEN AND/OR PERFORATED INTERVALS AND INTERVALS WHERE CASING WILL BE VARIED

Specify Open Hole/Perforations/Varied Casing	From	To	Formation Name
Open hole (6.125")	2751	4048	Lower Mt. Simon

Form Approved. OMB No. 2040-0042. Expires 6-30-98

EPA

United States Environmental Protection Agency

Underground Injection Control Permit Application

(Collected under the authority of the Safe Drinking Water Act. Sections 1421, 1422, 40 CFR 144)

I. EPA ID Number

		T/A	C
U	IND003913423		

Read Attached Instructions Before Starting

For Official Use Only

Application approved mo	day	year	Date received mo	day	year	Permit Number	Well ID	FINDS Number

II. Owner Name and Address

Owner Name: Bethlehem Steel Corp. WAL No. 1

Street Address: Burns Harbor Plant, P O Box 248

Phone Number:

City: Chesterton State: IN ZIP CODE: 46304

III. Operator Name and Address

Operator Name: Bethlehem Steel Corp.

Street Address: Burns Harbor Plant, P O Box 248

Phone Number:

City: Chesterton State: IN ZIP CODE: 46304

IV. Commercial Facility

- [ ] Yes
- [X] No

V. Ownership

- [X] Private
- [ ] Federal
- [ ] Other

VI. Legal Contact

- [X] Owner
- [ ] Operator

VII. SIC Codes

331

VIII. Well Status *(Mark "x")*

- [X] A. Operating — Date Started: mo 09, day 18, year 69
- [ ] B. Modification/Conversion
- [ ] C. Proposed

IX. Type of Permit Requested *(Mark "x" and specify if required)*

- [X] A. Individual
- [ ] B. Area

Number of Existing Wells	Number of Proposed Wells	Name(s) of field(s) or project(s)
3	0	

X. Class and Type of Well *(see reverse)*

A. Classes(es) (enter codes(s)	B. Type(s) (enter codes(s)	C. If class is "other" or type is code 'x,' explain	D. Number of wells per type (if area permit)
1	W		

XI. Location of Well(s) or Approximate Center of Field or Project

Latitude Deg	Min	Sec	Longitude Deg	Min	Sec	Township and Range Sec	Twp	Range	1/4 Sec	Feet From	Line	Feet From	Line
41	37	45	87	08	13	30	37N	6W	SE	350	E	2300	S

XII. Indian Lands (Mark 'x')

- [ ] Yes
- [X] No

XIII. Attachments

(Complete the following questions on a separate sheet(s) and number accordingly; see instructions)
For Classes I, II, III, (and other classes) complete and submit on a separate sheet(s) Attachments A--U (pp 2-6) as appropriate. Attach maps where required. List attachments by letter which are applicable and are included with your application. A B C D F H I K M O P Q R T U (V, W additional sections)

XIV. Certification

I certify under the penalty of law that I have personally examined and am familiar with the information submitted in this document and all attachments and that, based on my inquiry of those individuals immediately responsible for obtaining the information, I believe that the information is true, accurate, and complete. I am aware that there are significant penalties for submitting false information, including the possibility of fine and imprisonment. (Ref. 40 CFR 144.32)

A. Name and Title *(Type or Print)*: T.W. Easterly, Superintendent, Environmental Services Dept

B. Phone No. *(Area Code and No.)*: (219) 787-2712

C. Signature: T.W.E.

D. Date Signed: 10/14/97

UNITED STATES ENVIRONMENTAL PROTECTION AGENCY
WASHINGTON, DC 20460

IN-127-1W-004

EPA PLUGGING AND ABANDONMENT PLAN

NAME AND ADDRESS OF FACILITY	NAME AND ADDRESS OF OWNER/OPERATOR
Bethlehem Steel Corporation Burns Harbor Plant P O Box 248, Chesterton, IN 46304	Bethlehem Steel Corporation Burns Harbor Plant P O Box 248, Chesterton, IN 46304

LOCATE WELL AND OUTLINE UNIT ON SECTION PLAT — 640 ACRES

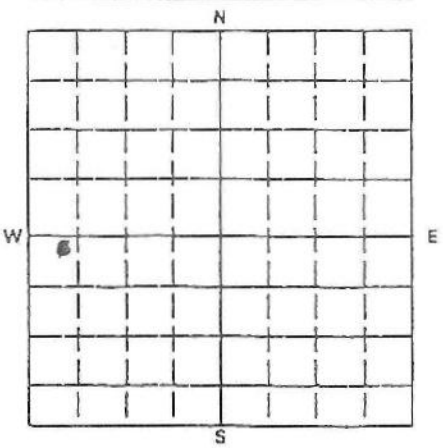

STATE	COUNTY	PERMIT NUMBER
IN	Porter	IN-127-1W-004

SURFACE LOCATION DESCRIPTION
___ 1/4 of NW 1/4 of NW 1/4 of SW 1/4 of Section 29 Township 37N Range 6W

LOCATE WELL IN TWO DIRECTIONS FROM NEAREST LINES OF QUARTER SECTION AND DRILLING UNIT

Surface Location 2200 ft. from (N/S) S Line of quarter section
and 470 ft. from (E/W) W Line of quarter section

TYPE OF AUTHORIZATION

- ☒ Individual Permit
- ☐ Area Permit
- ☐ Rule

Number of Wells 3

Lease Name

WELL ACTIVITY

- ☒ CLASS I
- ☐ CLASS II
  - ☐ Brine Disposal
  - ☐ Enhanced Recovery
  - ☐ Hydrocarbon Storage
- ☐ CLASS III

Well Number WAL Well No. 2

CASING AND TUBING RECORD AFTER PLUGGING

SIZE	WT(LB/FT)	TO BE PUT IN WELL (FT)	TO BE LEFT IN WELL (FT)	HOLE SIZE
13-3/8"	48	230	230	17-1/2"
9-5/8"	36	1435	1435	12-1/4"
7"	23	2520	2520	8-1/4"
5-1/2"	15.5	2726	2734	9"

METHOD OF EMPLACEMENT OF CEMENT PLUGS

- ☒ The Balance Method
- ☐ The Dump Bailer Method
- ☐ The Two-Plug Method
- ☐ Other

CEMENTING TO PLUG AND ABANDON DATA:	PLUG #1		PLUG #2	PLUG #4	PLUG #5	PLUG #6	PLUG #
Size of Hole or Pipe in which Plug Will Be Placed (inches)	8-1/2, 12, 4.95		4.95				
Depth to Bottom of Tubing or Drill Pipe (ft.)	4282		2650				
Sacks of Cement To Be Used (each plug)	1278		300				
Slurry Volume To Be Pumped (cu. ft.)	1508		354				
Calculated Top of Plug (ft.)	2650		3				
Measured Top of Plug (if tagged ft.)	–		3				
Slurry Wt. (Lb./Gal.)	15.6		15.6				
Type Cement or Other Material (Class III)	A		A				

LIST ALL OPEN HOLE AND/OR PERFORATED INTERVALS AND INTERVALS WHERE CASING WILL BE VARIED *(If any)*

From	To	From	To

Estimated Cost to Plug Wells $90,800

CERTIFICATION

I certify under the penalty of law that I have personally examined and am familiar with the information submitted in this document and all attachments and that, based on my inquiry of those individuals immediately responsible for obtaining the information, I believe that the information is true, accurate, and complete. I am aware that there are significant penalties for submitting false information, including the possibility of fine and imprisonment. (Ref. 40 CFR 144.32)

NAME AND OFFICIAL TITLE *(Please type or print)*	SIGNATURE	DATE SIGNED
T.W.Easterly, Superintendent Environmental Services Dept	T.W.E	10/14/87

EPA Form 7520-14

WAL 2

ORIGINAL WELL CONSTRUCTION DURING OPERATION

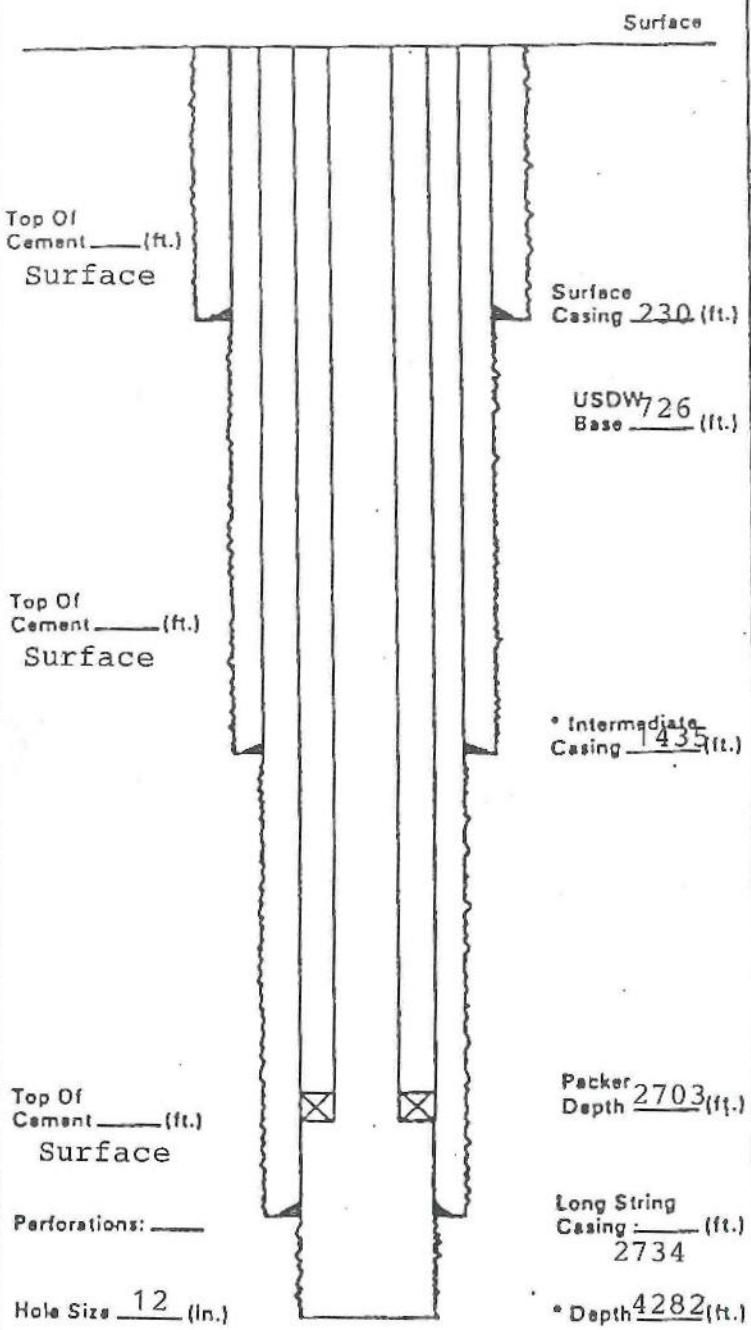

** Add Any Additional Information
* May Not Apply

PLUGGING AND ABANDONMENT CONSTRUCTION

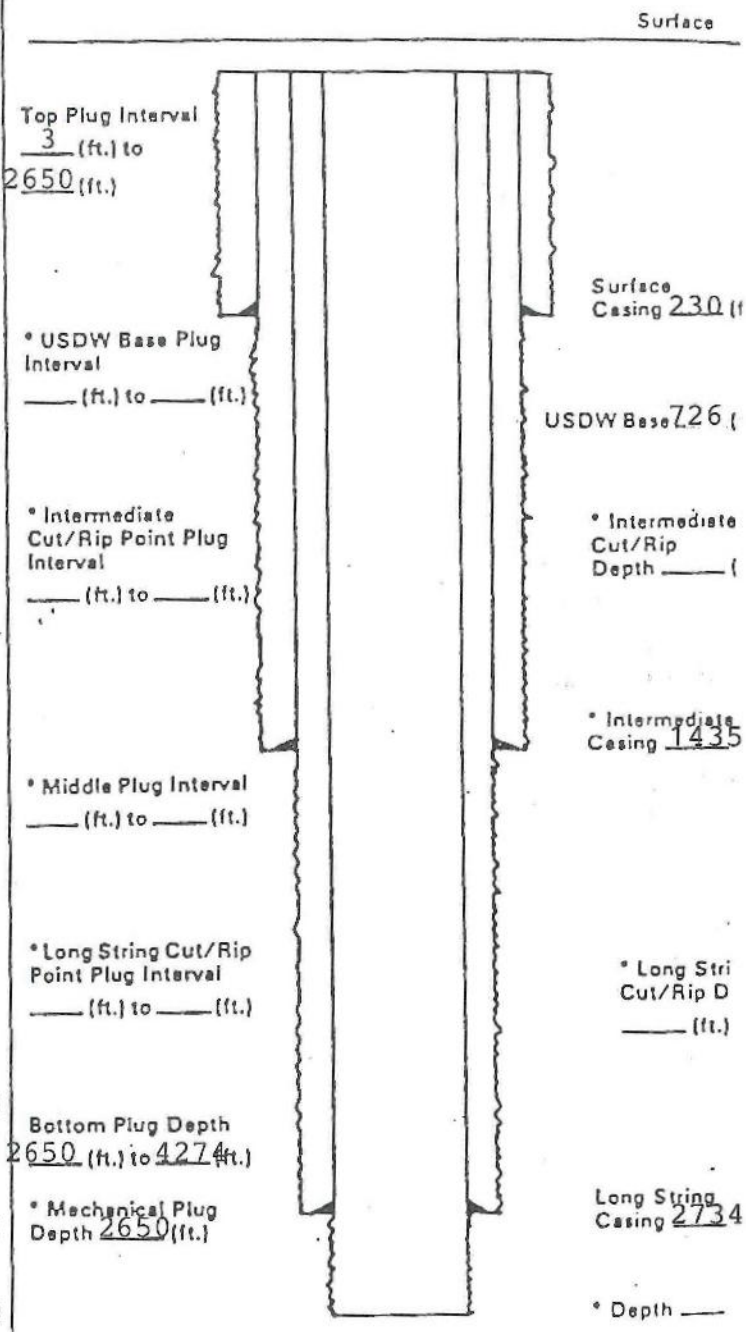

** Add Any Additional Information
* May Not Apply

LIST OF ALL OPEN AND/OR PERFORATED INTERVALS AND INTERVALS WHERE CASING WILL BE VARIED

Specify Open Hole/Perforations/Varied Casing	From	To	Formation Name
Open hole (12")	4282'	2734'	Lower Mt. Simon

TABLE OF CONTENTS

SECTION 1 INTRODUCTION

SECTION 2 WELL PERMIT APPLICATION FORMS

SECTION A AREA OF REVIEW METHODS

SECTION B MAPS OF WELL/ AREA AND AREA OF REVIEW
- B.1 AREA OF REVIEW MAP
- B.2 ARTIFICIAL PENETRATIONS
  - B.2.1 Summary of Search Protocol
  - B.2.2 Map of Located Artificial Penetrations
  - B.2.3 Well Data Files in Appendix A

SECTION C CORRECTIVE ACTION PLAN

SECTION D HYDROGEOLOGY
- D.1 TOPOGRAPHY
- D.2 REGIONAL HYDROLOGY
- D.3 LOCAL HYDROGEOLOGY
- D.4 REFERENCES

SECTION E NAME AND DEPTH OF USDWs (CLASS II)

SECTION F GEOLOGY
- F.1 REGIONAL GEOLOGY
- F.2 REGIONAL STRATIGRAPHY
- F.3 REGIONAL STRUCTURAL GEOLOGY
- F.4 LOCAL GEOLOGY/STRATIGRAPHY
- F.5 LOCAL GEOLOGY - INJECTION ZONE
- F.6 TOP OF THE INJECTION ZONE
- F.7 LOCAL GEOLOGY - CONFINING ZONE
- F.8 LOCAL STRUCTURAL GEOLOGY

F.9 CHARACTERISTICS OF THE INJECTION AND CONFINING ZONES
F.9.1 Permeability (k)
F.9.2 Net Sand (h)
F.9.3 Summary of Core Analysis Data from Midwest Steel WPL-2
F.10 GEOLOGIC SUMMARY AND ENVIRONMENTAL ASSESSMENT
F.11 REFERENCES

SECTION G GEOLOGICAL DATA ON INJECTION AND CONFINING ZONES (CLASS II)

SECTION H OPERATING DATA
H.1 AVERAGE AND MAXIMUM DAILY RATES AND VOLUMES
H.2 AVERAGE AND MAXIMUM INJECTION PRESSURE
H.3 NATURE OF THE ANNULUS FLUID
H.4 SOURCE AND CHEMICAL ANALYSIS OF INJECTED FLUIDS

SECTION I FORMATION TESTING PROGRAM

SECTION J STIMULATION PROGRAM

SECTION K INJECTION PROCEDURES
K.1 SPENT PICKLE LIQUOR (SPL)
K.2 DESCRIPTION OF THE PROCESS
K.3 SURFACE FACILITIES
K.4 WASTE AMMONIA LIQUOR (WAL)
K.5 SURFACE FACILITIES
K.6 ANNULUS PRESSURE MAINTENANCE SYSTEM
K.7 ALARM AND SHUT-OFF SYSTEMS

SECTION L CONSTRUCTION PROCEDURES

SECTION M CONSTRUCTION DETAILS

SECTION N CHANGES IN INJECTION FLUID

SECTION O PLANS FOR WELL FAILURES
O.1 WELL FAILURE
O.2 ALTERNATE DISPOSAL OR STORAGE

SECTION P MONITORING PROGRAM
P.1 WASTE ANALYSIS PLAN
P.2 CONTINUOUSLY MONITORED PARAMETERS
P.3 SEAL POT LEVEL MONITORING AND RECORDING
P.4 GROUNDWATER MONITORING PROGRAM
P.4.1 Purpose of Long Term Monitoring
P.4.2 Parameters Monitored

SECTION Q PLUGGING AND ABANDONMENT - POST CLOSURE PLANS

SECTION R NECESSARY RESOURCES

SECTION S AQUIFER EXEMPTIONS

SECTION T EXISTING EPA PERMITS

SECTION U DESCRIPTION OF BUSINESS
U.1 HISTORY OF OWNERSHIP AND OPERATION
U.2 OPERATIONS SHUTDOWN
U.3 CURRENT DIVISION CONFIGURATION
U.4 SIC CODES

SECTION V PRIOR RELEASES

SECTION W ADDITIONAL INFORMATION
W.1 APPLICABLE WASTE CODES
W.2 LAND DISPOSAL RESTRICTION DEADLINES
W.3 WASTE MINIMIZATION

FIGURES

FIGURE A-1	Pressure Buildup in the Injection Zone and Cone of Influence
FIGURE B-1	Area of Review - US Geological Survey Topographic Maps
FIGURE B-2	Artificial Penetrations Map
FIGURE D-1	Stratigraphic and the Hydrologic Relationships of the Paleozoic and Cenozoic Aquifers
FIGURE D-2	Surface and Subsurface Hydrologic Features in Lake and Porter counties.
FIGURE D-3	North-South Cross Section through Lake County Showing the Positions of the Unconsolidated Aquifers
FIGURE D-4	A Map of the Potentiometric Surface of Unconsolidated Aquifers
FIGURE F-1	Regional Geology
FIGURE F-2	Regional Northwest - Southeast Cross Section
FIGURE F-3	Surface and Subsurface Hydrologic Features
FIGURE F-4	Cross Section of Pre-Knox Strata
FIGURE F-5	Structure of the Precambrian Basement Rock
FIGURE F-6	Panel Diagram of the Mt. Simon
FIGURE F-7	Structure and Thickness of the Mt. Simon
FIGURE F-8	Surface Geology Map
FIGURE F-9	WAL#2 Type Log and Lithologic Description
FIGURE F-10	Injection Interval Isopach Map
FIGURE F-11	Confining Zone Isopach Map
FIGURE F-12	Structure Contour Map of Confining Zone
FIGURE F-13	Structure Contour Map of Injection interval
FIGURE F-14	North-South Cross Section
FIGURE F-15	West-East Cross Section
FIGURE F-16	Location of Wells Used to Construct the Geologic Cross Sections
FIGURE F-17	Cross Section Showing Lithologic Continuity
FIGURE K-1	Process Diagram - Pickling Lines
FIGURE K-2	Surface Facilities - SPL

FIGURE K-3 Process Diagram - WAL
FIGURE K-4 Diagram of the Surface Facilities - WAL

FIGURE M-1 Schematic Diagram of SPL-1
FIGURE M-2 Schematic Diagram of WAL-1
FIGURE M-3 Schematic Diagram of WAL-2
FIGURE M-4 Wellhead Diagram for SPL-1
FIGURE M-5 Wellhead Diagram for WAL-1
FIGURE M-6 Wellhead Diagram for WAL-2

FIGURE U-1 Schematic Process Flow Diagram

TABLES

TABLE A-1	Cone of Influence Calculation
TABLE D-1	Summary of TDS and Pressure Data
TABLE F-1	Stratigraphic Chart Appropriate for the NE Illinois - NW Indiana area.
TABLE H-1	Maximum Daily Injection Rates from November 1995 to July 1997
TABLE H-2	The Average Daily Injection Volumes from January 1995 to May 1997
TABLE H-3	The Maximum Daily Injection Volumes from January 1995 to May 1997
TABLE H-4	The Maximum Daily Injection Pressures from January 1995 to May 1997
TABLE H-5	Historical Chemical Analyses of the SPL and WAL
TABLE H-6	Appendix IX Parameter Analysis on SPL
TABLE H-7	Appendix IX Parameter Analysis on WAL
TABLE T-1	Summary of Past and Existing Environmental Permits for the Bethlehem Steel Burns Harbor Facility

APPENDICES

APPENDIX A	Well Records
Appendix A-1	Records of Deep Wells that Penetrate at Least to the Bethlehem Steel Confining Zone (5 wells)
Appendix A-2	Records of Wells the Indiana Geological Survey Classified as "Deep", but which did not Reach the Bethlehem Steel Confining Zone (9 wells)
Appendix A-3	Records of Water Wells Drilled Post 1994, within 2-1/2 Miles of Bethlehem's Injection Wells (25 wells)
Appendix A-4	Records of Wells Drilled up until 1994, within 2-1/2 Miles of Bethlehem's Injection Wells (132 wells)
Appendix A-5	Records of Water Wells Drilled at any Time Up Until September 1997, in the Area Between 2-1/2 and 4 Miles from Bethlehem's Injection Wells (205 wells)
APPENDIX B	Fracture Gradient Data
APPENDIX C	Waste Analysis Plan
APPENDIX D	Financial Assurance Mechanism.

SECTION 1 - INTRODUCTION

Bethlehem Steel Corporation, Inc. (BSC) operates three Class 1 injection wells at its Burns Harbor Division, in northwestern Indiana. One well injects spent pickle liquor (SPL), derived from cleaning mill scale and oxides from steel during the finishing process. Two wells inject waste ammonia liquor (WAL), derived from the coke making process. The wells operate under authority of Underground Injection Control (UIC) permits issued by the United States Environmental Protection Agency (USEPA). Applicable permit numbers are as follows:

Well	Permit Number	Stated Expiration Date
SPL-1	IN-127-1W-0001	10/30/91
WAL-1	IN-127-1W-0003	10/30/90
WAL-2	IN-127-1W-0004	10/30/90

Bethlehem Steel filed permit renewal applications for the wells in April 1990 and April 1991, more than 180 days prior to the permit expiration dates, as required by federal regulation. In the interim period, the existing permits have continued in effect.

On July 15, 1997 BSC received notification from the USEPA that the permit renewal applications were deficient due to the absence of required attachments to the applications containing supporting documentation for the injection wells. Additionally, the USEPA requested data concerning two specific technical issues, 1) a waste analysis plan that ensures that injected waste is fully characterized on a periodic frequency, and, 2) the appropriate maximum injection pressure, and the basis underlying this value. This document contains the supporting attachments requested by the USEPA, and addresses the two technical issues noted above. The two technical issues are addressed in document Sections P and I, respectively.

1.1 ORGANIZATION OF MATERIALS

This document presents the attachments in the order they are requested in the letter received from the USEPA on July 15, 1997.

1.2 SOURCES OF DATA

To a large degree, information presented in this document has been extracted from Bethlehem's 1990 Petition for exemption from the hazardous waste restrictions. In 1990 Bethlehem was granted an exemption to continue injection of hazardous waste subject to the Land Disposal Restrictions of the Hazardous and Solid Waste Amendments of 1984. Where necessary, information has been updated or revised to reflect changes that have occurred since the petition was prepared.

1.3 PERMIT PARAMETERS

Bethlehem is requesting that the major permit parameters remain unchanged from the current status. No modifications are being requested for the three injection wells at Bethlehem's Burns Harbor Division.

SECTION 2 - WELL PERMIT APPLICATION FORMS

The United States Environmental Protection Agency, Underground Injection Control Permit Applications for Bethlehem Steel's injection wells: SPL-1 (Permit Number IN-127-1W-0001), WAL-1 (Permit Number IN-127-1W-0003) and WAL-2 (Permit Number IN-127-1W-0004) are found on the following pages.

Form Approved. OMB No. 2040-0042. Expires 6-30-98

United States Environmental Protection Agency

Underground Injection Control Permit Application

(Collected under the authority of the Safe Drinking Water Act, Sections 1421, 1422, 40 CFR 144)

I. EPA ID Number		T/A	C
U	IND003913423		

Read Attached Instructions Before Starting

For Official Use Only

Application approved mo	day	year	Date received mo	day	year	Permit Number	Well ID	FINDS Number

II. Owner Name and Address			III. Operator Name and Address		
Owner Name: Bethlehem Steel Corp. WPL No. 1			Operator Name: Bethlehem Steel Corporation		
Street Address: Burns Harbor Plant, P O Box 248		Phone Number	Street Address: Burns Harbor Plant, P O Box 248		Phone Number
City: Chesterton	State: IN	ZIP CODE: 46304	City: Chesterton	State: IN	ZIP CODE: 46304

IV. Commercial Facility	V. Ownership	VI. Legal Contact	VII. SIC Codes
[ ] Yes [X] No	[X] Private [ ] Federal [ ] Other	[X] Owner [ ] Operator	331

VIII. Well Status *(Mark "x")*

[X] A. Operating	Date Started mo	day	year	[ ] B. Modification/Conversion	[ ] C. Proposed
	03	30	68		

IX. Type of Permit Requested *(Mark "x" and specify if required)*

[X] A. Individual	[ ] B. Area	Number of Existing Wells	Number of Proposed Wells	Name(s) of field(s) or project(s)
		3	0	

X. Class and Type of Well *(see reverse)*

A. Classes(es) (enter codes(s)	B. Type(s) (enter codes(s)	C. If class is "other" or type is code 'x,' explain	D. Number of wells per type (if area permit)
1	W		

XI. Location of Well(s) or Approximate Center of Field or Project / **XII. Indian Lands (Mark 'x')**

Latitude Deg	Min	Sec	Longitude Deg	Min	Sec	Township and Range Sec	Twp	Range	1/4 Sec	Feet From	Line	Feet From	Line	[ ] Yes [X] No
41	37	58	87	07	08	28	37N	6W	NW	1600	W	1250	N	

XIII. Attachments

(Complete the following questions on a separate sheet(s) and number accordingly; see instructions)
For Classes I, II, III, (and other classes) complete and submit on a separate sheet(s) Attachments A--U (pp 2-6) as appropriate. Attach maps where required. List attachments by letter which are applicable and are included with your application. A B C D F H I K M O P Q R T U (V, W additional sections)

XIV. Certification

I certify under the penalty of law that I have personally examined and am familiar with the information submitted in this document and all attachments and that, based on my inquiry of those individuals immediately responsible for obtaining the information, I believe that the information is true, accurate, and complete. I am aware that there are significant penalties for submitting false information, including the possibility of fine and imprisonment. (Ref. 40 CFR 144.32)

A. Name and Title *(Type or Print)*	B. Phone No. *(Area Code and No.)*
W. N. Bargeron, President	(219) 787-3201
C. Signature: W N Bargeron	D. Date Signed: 11/4/97

EPA Form 7520-6 (Rev. 8-91)

Form Approved OMB No 2040-0042 Expires 6-30-

UNITED STATES ENVIRONMENTAL PROTECTION AGENCY
WASHINGTON, DC 20460

IN-127-1W-0001

EPA PLUGGING AND ABANDONMENT PLAN

NAME AND ADDRESS OF FACILITY	NAME AND ADDRESS OF OWNER/OPERATOR
Bethlehem Steel Corporation Burns Harbor Plant P O Box 248, Chesterton, IN 46304	Bethlehem Steel Corporation Burns Harbor Plant P O Box 248, Chesterton, IN 46304

LOCATE WELL AND OUTLINE UNIT ON SECTION PLAT — 640 ACRES

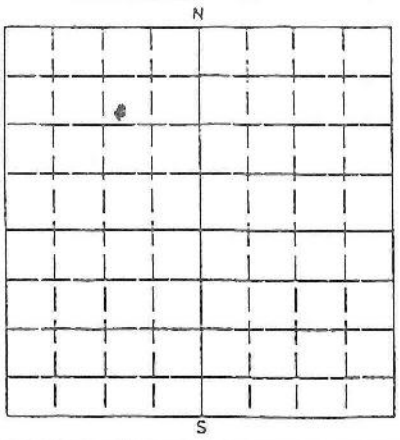

STATE: IN
COUNTY: Porter
PERMIT NUMBER: IN-127-1W-0001

SURFACE LOCATION DESCRIPTION
__ 1/4 of SW 1/4 of NE 1/4 of NW 1/4 of Section 28 Township 37N Range 6W

LOCATE WELL IN TWO DIRECTIONS FROM NEAREST LINES OF QUARTER SECTION AND DRILLING UNIT

Surface Location 1250 ft. from (N/S) N Line of quarter section
and 1600 ft. from (E/W) W Line of quarter section

TYPE OF AUTHORIZATION

- ☒ Individual Permit
- ☐ Area Permit
- ☐ Rule

Number of Wells 3

Lease Name

WELL ACTIVITY

- ☒ CLASS I
- ☐ CLASS II
  - ☐ Brine Disposal
  - ☐ Enhanced Recovery
  - ☐ Hydrocarbon Storage
- ☐ CLASS III

Well Number SPL Well No. 1

CASING AND TUBING RECORD AFTER PLUGGING

SIZE	WT(LB/FT)	TO BE PUT IN WELL (FT)	TO BE LEFT IN WELL (FT)	HOLE SIZE
20"		20	20	
10-3/4"		384	384	14-3/4"
7"	26		2204	8-3/4"

METHOD OF EMPLACEMENT OF CEMENT PLUGS

- ☒ The Balance Method
- ☐ The Dump Bailer Method
- ☐ The Two-Plug Method
- ☐ Other

CEMENTING TO PLUG AND ABANDON DATA:	PLUG #1	PLUG #2	PLUG #3	PLUG #4	PLUG #6	PLUG #7
Size of Hole or Pipe in which Plug Will Be Placed (inches)	6.125	6.125	3.9,3.0	3.0,2.9,4.41		
Depth to Bottom of Tubing or Drill Pipe (ft.)	4048	2787		2500		
Sacks of Cement To Be Used (each plug)	263	169*		168		
Slurry Volume To Be Pumped (cu. ft.)	310	169*		198		
Calculated Top of Plug (ft.)	2787	2500		3'below grade		
Measured Top of Plug (if tagged ft.)	2787	2500		3'below grade		
Slurry Wt. (Lb./Gal.)	16.4	12.6		15.6		
Type Cement or Other Material (Class III)	H	Resin		A		

LIST ALL OPEN HOLE AND/OR PERFORATED INTERVALS AND INTERVALS WHERE CASING WILL BE VARIED *(If any)*

From	To	From	To
2751	4048		

Estimated Cost to Plug Wells $156,400
* gallons

CERTIFICATION

I certify under the penalty of law that I have personally examined and am familiar with the information submitted in this document and all attachments and that, based on my inquiry of those individuals immediately responsible for obtaining the information, I believe that the information is true, accurate, and complete. I am aware that there are significant penalties for submitting false information, including the possibility of fine and imprisonment. (Ref. 40 CFR 144.32)

NAME AND OFFICIAL TITLE *(Please type or print)*	SIGNATURE	DATE SIGNED
W. N. Bargeron, President	WN Bargeron	11/4/97

EPA Form 7520-14

Form Approved OMB No. 2040-0042 Approval Expires 6-30-

UNITED STATES ENVIRONMENTAL PROTECTION AGENCY
WASHINGTON, DC 20460

IN-127-1W-0001

EPA PLUGGING AND ABANDONMENT PLAN

NAME AND ADDRESS OF FACILITY	NAME AND ADDRESS OF OWNER/OPERATOR
Bethlehem Steel Corporation Burns Harbor Plant P O Box 248, Chesterton, IN 46304	Bethlehem Steel Corporation Burns Harbor Plant P O Box 248, Chesterton, IN 46304

LOCATE WELL AND OUTLINE UNIT ON SECTION PLAT — 640 ACRES

N
W E
S

STATE	COUNTY	PERMIT NUMBER
IN	Porter	IN-127-1W-0001

SURFACE LOCATION DESCRIPTION
___ 1/4 of SW 1/4 of NE 1/4 of NW 1/4 of Section 28 Township 37N Range 6W

LOCATE WELL IN TWO DIRECTIONS FROM NEAREST LINES OF QUARTER SECTION AND DRILLING UNIT

Surface Location 1250 ft. from (N/S) N Line of quarter section
and 1600 ft. from (E/W) W Line of quarter section

TYPE OF AUTHORIZATION

- [x] Individual Permit
- [ ] Area Permit
- [ ] Rule

Number of Wells 3

Lease Name

WELL ACTIVITY

- [x] CLASS I
- [ ] CLASS II
  - [ ] Brine Disposal
  - [ ] Enhanced Recovery
  - [ ] Hydrocarbon Storage
- [ ] CLASS III

Well Number SPL Well No.1

CASING AND TUBING RECORD AFTER PLUGGING

SIZE	WT(LB/FT)	TO BE PUT IN WELL (FT)	TO BE LEFT IN WELL (FT)	HOLE SIZE
Continued from page 1 of 4				
5"	15	1540	1540	8 3/4"
5 1/2"	Fibergl	1162	1162	9 3/4"

METHOD OF EMPLACEMENT OF CEMENT PLUGS

- [x] The Balance Method
- [ ] The Dump Bailer Method
- [ ] The Two-Plug Method
- [ ] Other

CEMENTING TO PLUG AND ABANDON DATA:	PLUG #1	PLUG #2	PLUG #3	PLUG #4	PLUG #5	PLUG #6	PLUG #7
Size of Hole or Pipe in which Plug Will Be Placed (inches)							
Depth to Bottom of Tubing or Drill Pipe (ft.)							
Sacks of Cement To Be Used (each plug)							
Slurry Volume To Be Pumped (cu. ft.)							
Calculated Top of Plug (ft.)							
Measured Top of Plug (if tagged ft.)							
Slurry Wt. (Lb./Gal.)							
Type Cement or Other Material (Class III)							

LIST ALL OPEN HOLE AND/OR PERFORATED INTERVALS AND INTERVALS WHERE CASING WILL BE VARIED *(If any)*

From	To	From	To

Estimated Cost to Plug Wells

CERTIFICATION

I certify under the penalty of law that I have personally examined and am familiar with the information submitted in this document and all attachments and that, based on my inquiry of those individuals immediately responsible for obtaining the information, I believe that the information is true, accurate, and complete. I am aware that there are significant penalties for submitting false information, including the possibility of fine and imprisonment. (Ref. 40 CFR 144.32)

NAME AND OFFICIAL TITLE *(Please type or print)*	SIGNATURE	DATE SIGNED
W. N. Bargeron, President	W N Bargeron	11/4/97

Form Approved. OMB No. 2040-0042 Approval Expires 6-30-

UNITED STATES ENVIRONMENTAL PROTECTION AGENCY
WASHINGTON, DC 20460

IN-127-1W-0001

EPA PLUGGING AND ABANDONMENT PLAN

NAME AND ADDRESS OF FACILITY	NAME AND ADDRESS OF OWNER/OPERATOR
Bethlehem Steel Corporation Burns Harbor Plant P O Box 248, Chesterton, IN 46304	Bethlehem Steel Corporation Burns Harbor Plant P O Box 248, Chesterton, IN 46304

LOCATE WELL AND OUTLINE UNIT ON SECTION PLAT — 640 ACRES

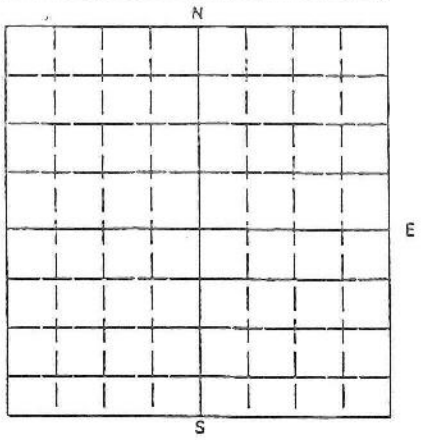

STATE	COUNTY	PERMIT NUMBER
IN	Porter	IN-127-1W-0001

SURFACE LOCATION DESCRIPTION
___ 1/4 of SW 1/4 of NE 1/4 of NW 1/4 of Section 28 Township 37N Range 6W

LOCATE WELL IN TWO DIRECTIONS FROM NEAREST LINES OF QUARTER SECTION AND DRILLING UNIT

Surface Location 1250 ft. from (N/S) N Line of quarter section
and 1600 ft. from (E/W) W Line of quarter section

TYPE OF AUTHORIZATION

- ☒ Individual Permit
- ☐ Area Permit
- ☐ Rule

Number of Wells 3

Lease Name

WELL ACTIVITY

- ☒ CLASS I
- ☐ CLASS II
  - ☐ Brine Disposal
  - ☐ Enhanced Recovery
  - ☐ Hydrocarbon Storage
- ☐ CLASS III

Well Number SPL No. 1

CASING AND TUBING RECORD AFTER PLUGGING

SIZE	WT(LB/FT)	TO BE PUT IN WELL (FT)	TO BE LEFT IN WELL (FT)	HOLE SIZE
Continued from page 2 of 4				
3-1/2"	9.30	424	424	5"
3-1/2"	Fibergl	951	951	5"
4"	Hastelloy	36	36	5"

METHOD OF EMPLACEMENT OF CEMENT PLUGS

- ☒ The Balance Method
- ☐ The Dump Bailer Method
- ☐ The Two-Plug Method
- ☐ Other

CEMENTING TO PLUG AND ABANDON DATA:	PLUG #1	PLUG #2	PLUG #3	PLUG #4	PLUG #5	PLUG #6	PLUG #7
Size of Hole or Pipe in which Plug Will Be Placed (inches)							
Depth to Bottom of Tubing or Drill Pipe (ft.)							
Sacks of Cement To Be Used (each plug)							
Slurry Volume To Be Pumped (cu. ft.)							
Calculated Top of Plug (ft.)							
Measured Top of Plug (if tagged ft.)							
Slurry Wt. (Lb./Gal.)							
Type Cement or Other Material (Class III)							

LIST ALL OPEN HOLE AND/OR PERFORATED INTERVALS AND INTERVALS WHERE CASING WILL BE VARIED *(If any)*

From	To	From	To

Estimated Cost to Plug Wells

CERTIFICATION

I certify under the penalty of law that I have personally examined and am familiar with the information submitted in this document and all attachments and that, based on my inquiry of those individuals immediately responsible for obtaining the information, I believe that the information is true, accurate, and complete. I am aware that there are significant penalties for submitting false information, including the possibility of fine and imprisonment. (Ref. 40 CFR 144.32)

NAME AND OFFICIAL TITLE *(Please type or print)*	SIGNATURE	DATE SIGNED
W. N. Bargeron, President	W N Bargeron	11/4/97

Form Approved. OMB No. 2040-0042. Expires 6-30-98

United States Environmental Protection Agency

Underground Injection Control Permit Application

(Collected under the authority of the Safe Drinking Water Act. Sections 1421, 1422, 40 CFR 144)

I. EPA ID Number		T/A	C
U	IND003913423		

Read Attached Instructions Before Starting

For Official Use Only

Application approved mo	day	year	Date received mo	day	year	Permit Number	Well ID	FINDS Number

II. Owner Name and Address			III. Operator Name and Address		
Owner Name: Bethlehem Steel Corp. WAL No. 1			Operator Name: Bethlehem Steel Corp.		
Street Address: Burns Harbor Plant P O Box 248		Phone Number	Street Address: Burns Harbor Plant P O Box 248		Phone Number
City: Chesterton	State: IN	ZIP CODE: 46304	City: Chesterton	State: IN	ZIP CODE: 46304

IV. Commercial Facility	V. Ownership	VI. Legal Contact	VII. SIC Codes
[ ] Yes [X] No	[X] Private [ ] Federal [ ] Other	[X] Owner [ ] Operator	331

VIII. Well Status *(Mark "x")*

[X] A. Operating	Date Started mo	day	year	[ ] B. Modification/Conversion	[ ] C. Proposed
	09	18	69		

IX. Type of Permit Requested *(Mark "x" and specify if required)*

[X] A. Individual	[ ] B. Area	Number of Existing Wells	Number of Proposed Wells	Name(s) of field(s) or project(s)
		3	0	

X. Class and Type of Well *(see reverse)*

A. Classes(es) (enter codes(s)	B. Type(s) (enter codes(s)	C. If class is "other" or type is code 'x,' explain	D. Number of wells per type (if area permit)
1	W		

XI. Location of Well(s) or Approximate Center of Field or Project / **XII. Indian Lands (Mark 'x')**

Latitude Deg	Min	Sec	Longitude Deg	Min	Sec	Township and Range Sec	Twp	Range	1/4 Sec	Feet From	Line	Feet From	Line	[ ] Yes [X] No
41	37	45	87	08	13	30	37N	6W	SE	350	E	2300	S	

XIII. Attachments

(Complete the following questions on a separate sheet(s) and number accordingly; see instructions)
For Classes I, II, III, (and other classes) complete and submit on a separate sheet(s) Attachments A--U (pp 2-6) as appropriate. Attach maps where required. List attachments by letter which are applicable and are included with your application. A B C D F H I K M O P Q R T U (V, W additional sections)

XIV. Certification

I certify under the penalty of law that I have personally examined and am familiar with the information submitted in this document and all attachments and that, based on my inquiry of those individuals immediately responsible for obtaining the information, I believe that the information is true, accurate, and complete. I am aware that there are significant penalties for submitting false information, including the possibility of fine and imprisonment. (Ref. 40 CFR 144.32)

A. Name and Title *(Type or Print)*	B. Phone No. *(Area Code and No.)*
W. N. Bargeron, President	(219) 787-3201
C. Signature: W N Bargeron	D. Date Signed: 11/4/97

Form Approved. OMB No 2040-0042 Approval Expires 6-

UNITED STATES ENVIRONMENTAL PROTECTION AGENCY
WASHINGTON, DC 20460

IN-127-1W-003

EPA PLUGGING AND ABANDONMENT PLAN

NAME AND ADDRESS OF FACILITY	NAME AND ADDRESS OF OWNER/OPERATOR
Bethlehem Steel Corporation Burns Harbor Plant P O Box 248, Chesterton, IN 46304	Bethlehem Steel Corporation Burns Harbor Plant P O Box 248, Chesterton, IN 46304

LOCATE WELL AND OUTLINE UNIT ON SECTION PLAT — 640 ACRES

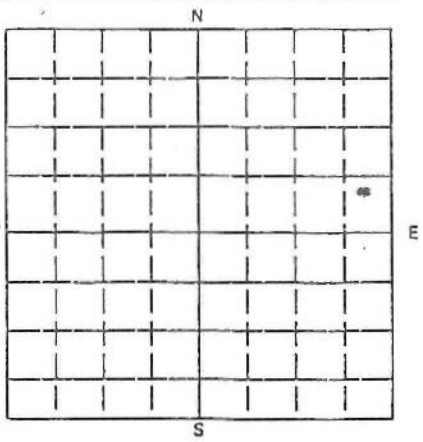

STATE	COUNTY	PERMIT NUMBER
IN	Porter	IN-127-1W-003

SURFACE LOCATION DESCRIPTION
___ 1/4 of NE 1/4 of NE 1/4 of SE 1/4 of Section 30 Township 37N Range 6W

LOCATE WELL IN TWO DIRECTIONS FROM NEAREST LINES OF QUARTER SECTION AND DRILLING UNIT

Surface Location 2300 ft. from (N/S) S Line of quarter section
and 350 ft. from (E/W) E Line of quarter section

TYPE OF AUTHORIZATION
- ☒ Individual Permit
- ☐ Area Permit
- ☐ Rule

Number of Wells 3

WELL ACTIVITY
- ☒ CLASS I
- ☐ CLASS II
  - ☐ Brine Disposal
  - ☐ Enhanced Recovery
  - ☐ Hydrocarbon Storage
- ☐ CLASS III

Lease Name

Well Number WAL Well No. 1

CASING AND TUBING RECORD AFTER PLUGGING

SIZE	WT(LB/FT)	TO BE PUT IN WELL (FT)	TO BE LEFT IN WELL (FT)	HOLE SIZE
13-3/8"	48	215	215	17-1/2"
9-5/8"	36	1437	1437	12-1/4"
7"	23	2530	2530	8-1/2"
5-1/2"	15.5	2730	2730	9"

METHOD OF EMPLACEMENT OF CEMENT PLUGS
- ☒ The Balance Method
- ☐ The Dump Bailer Method
- ☐ The Two-Plug Method
- ☐ Other

CEMENTING TO PLUG AND ABANDON DATA:	PLUG #1		PLUG #2		PLUG #5	PLUG #6	PLUG #7
Size of Hole or Pipe in which Plug Will Be Placed (inches)	8-1/2, 12.4.95		4.95				
Depth to Bottom of Tubing or Drill Pipe (ft.)	4274		2650				
Sacks of Cement To Be Used (each plug)	1276		300				
Slurry Volume To Be Pumped (cu. ft.)	1506		354				
Calculated Top of Plug (ft.)	2650		3				
Measured Top of Plug (if tagged ft.)	–		3				
Slurry Wt. (Lb./Gal.)	15.6		15.6				
Type Cement or Other Material (Class III)	A		A				

LIST ALL OPEN HOLE AND/OR PERFORATED INTERVALS AND INTERVALS WHERE CASING WILL BE VARIED *(If any)*

From	To	From	To

Estimated Cost to Plug Wells $90,800

CERTIFICATION

I certify under the penalty of law that I have personally examined and am familiar with the information submitted in this document and all attachments and that, based on my inquiry of those individuals immediately responsible for obtaining the information, I believe that the information is true, accurate, and complete. I am aware that there are significant penalties for submitting false information, including the possibility of fine and imprisonment. (Ref. 40 CFR 144.32)

NAME AND OFFICIAL TITLE *(Please type or print)*	SIGNATURE	DATE SIGNED
W. N. Bargeron, President	W N Bargeron	11/4/97

Form Approved. OMB No. 2040-0042. Expires 6-30-98

EPA

United States Environmental Protection Agency

Underground Injection Control Permit Application

(Collected under the authority of the Safe Drinking Water Act. Sections 1421, 1422, 40 CFR 144)

I. EPA ID Number		T/A	C
U	IND003913423		

Read Attached Instructions Before Starting

For Official Use Only

Application approved mo	day	year	Date received mo	day	year	Permit Number	Well ID	FINDS Number

II. Owner Name and Address			III. Operator Name and Address		
Owner Name: Bethlehem Steel Corp WAL No. 2			Operator Name: Bethlehem Steel Corporation		
Street Address: Burns Harbor Plant, P O Box 248		Phone Number	Street Address: Burns Harbor Plant, P O Box 248		Phone Number
City: Chesterton	State: IN	ZIP CODE: 46304	City: Chesterton	State: IN	ZIP CODE: 46304

IV. Commercial Facility	V. Ownership	VI. Legal Contact	VII. SIC Codes
[ ] Yes [X] No	[X] Private [ ] Federal [ ] Other	[X] Owner [ ] Operator	331

VIII. Well Status *(Mark "x")*

[X] A. Operating	Date Started mo	day	year	[ ] B. Modification/Conversion	[ ] C. Proposed
	09	18	69		

IX. Type of Permit Requested *(Mark "x" and specify if required)*

[X] A. Individual	[ ] B. Area	Number of Existing Wells	Number of Proposed Wells	Name(s) of field(s) or project(s)
		3	0	

X. Class and Type of Well *(see reverse)*

A. Classes(es) (enter codes(s)	B. Type(s) (enter codes(s)	C. If class is "other" or type is code 'x,' explain	D. Number of wells per type (if area permit)
1	W		

XI. Location of Well(s) or Approximate Center of Field or Project / **XII. Indian Lands (Mark 'x')**

Latitude Deg	Min	Sec	Longitude Deg	Min	Sec	Township and Range Sec	Twp	Range	1/4 Sec	Feet From	Line	Feet From	Line	Indian Lands
41	37	44	87	08	03	29	37N	6W	SW	470	W	2200	S	[ ] Yes [X] No

XIII. Attachments

(Complete the following questions on a separate sheet(s) and number accordingly; see instructions)
For Classes I, II, III, (and other classes) complete and submit on a separate sheet(s) Attachments A--U (pp 2-6) as appropriate. Attach maps where required. List attachments by letter which are applicable and are included with your application. A B C D F H I K M O P Q R T U (V, W additional sections)

XIV. Certification

I certify under the penalty of law that I have personally examined and am familiar with the information submitted in this document and all attachments and that, based on my inquiry of those individuals immediately responsible for obtaining the information, I believe that the information is true, accurate, and complete. I am aware that there are significant penalties for submitting false information, including the possibility of fine and imprisonment. (Ref. 40 CFR 144.32)

A. Name and Title *(Type or Print)*	B. Phone No. *(Area Code and No.)*
W. N. Bargeron, President	(219) 787-3201
C. Signature: W N Bargeron	D. Date Signed: 11/4/97

Form Approved. OMB No. 2040-0042. Approval Expires 6-3

UNITED STATES ENVIRONMENTAL PROTECTION AGENCY
WASHINGTON, DC 20460

IN-127-1W-004

EPA PLUGGING AND ABANDONMENT PLAN

NAME AND ADDRESS OF FACILITY	NAME AND ADDRESS OF OWNER/OPERATOR
Bethlehem Steel Corporation Burns Harbor Plant P O Box 248, Chesterton, IN 46304	Bethlehem Steel Corporation Burns Harbor Plant P O Box 248, Chesterton, IN 46304

LOCATE WELL AND OUTLINE UNIT ON SECTION PLAT — 640 ACRES

N / W / E / S

STATE	COUNTY	PERMIT NUMBER
IN	Porter	IN-127-1W-004

SURFACE LOCATION DESCRIPTION
___ 1/4 of NW 1/4 of NW 1/4 of SW 1/4 of Section 29 Township 37N Range 6W

LOCATE WELL IN TWO DIRECTIONS FROM NEAREST LINES OF QUARTER SECTION AND DRILLING UNIT

Surface Location 2200 ft. from (N/S) S Line of quarter section
and 470 ft. from (E/W) W Line of quarter section

TYPE OF AUTHORIZATION
- ☒ Individual Permit
- ☐ Area Permit
- ☐ Rule

Number of Wells 3

WELL ACTIVITY
- ☒ CLASS I
- ☐ CLASS II
  - ☐ Brine Disposal
  - ☐ Enhanced Recovery
  - ☐ Hydrocarbon Storage
- ☐ CLASS III

Lease Name

Well Number WAL Well No. 2

CASING AND TUBING RECORD AFTER PLUGGING

SIZE	WT(LB/FT)	TO BE PUT IN WELL (FT)	TO BE LEFT IN WELL (FT)	HOLE SIZE
13-3/8"	48	230	230	17-1/2"
9-5/8"	36	1435	1435	12-1/4"
7"	23	2520	2520	8-1/4"
5-1/2"	15.5	2726	2734	9"

METHOD OF EMPLACEMENT OF CEMENT PLUGS
- ☒ The Balance Method
- ☐ The Dump Bailer Method
- ☐ The Two-Plug Method
- ☐ Other

CEMENTING TO PLUG AND ABANDON DATA:	PLUG #1		PLUG # 2	PLUG #4	PLUG #5	PLUG #6	PLUG #7
Size of Hole or Pipe in which Plug Will Be Placed (inches)	8-1/2, 12, 4.95		4.95				
Depth to Bottom of Tubing or Drill Pipe (ft.)	4282		2650				
Sacks of Cement To Be Used (each plug)	1278		300				
Slurry Volume To Be Pumped (cu. ft.)	1508		354				
Calculated Top of Plug (ft.)	2650		3				
Measured Top of Plug (if tagged ft.)	–		3				
Slurry Wt. (Lb./Gal.)	15.6		15.6				
Type Cement or Other Material (Class III)	A		A				

LIST ALL OPEN HOLE AND/OR PERFORATED INTERVALS AND INTERVALS WHERE CASING WILL BE VARIED *(If any)*

From	To	From	To

Estimated Cost to Plug Wells $90,800

CERTIFICATION

I certify under the penalty of law that I have personally examined and am familiar with the information submitted in this document and all attachments and that, based on my inquiry of those individuals immediately responsible for obtaining the information, I believe that the information is true, accurate, and complete. I am aware that there are significant penalties for submitting false information, including the possibility of fine and imprisonment. (Ref. 40 CFR 144.32)

NAME AND OFFICIAL TITLE *(Please type or print)*	SIGNATURE	DATE SIGNED
W. N. Bargeron, President	W N Bargeron	11/4/97

United States Environmental Protection Agency

Underground Injection Control Permit Application

(Collected under the authority of the Safe Drinking Water Act, Sections 1421, 1422, 40 CFR 144)

I. EPA ID Number		T/A	C
U	IND003913423		

Read Attached Instructions Before Starting

For Official Use Only

Application approved mo	day	year	Date received mo	day	year	Permit Number	Well ID	FINDS Number

II. Owner Name and Address			III. Operator Name and Address		
Owner Name: Bethlehem Steel Corp. WPL No. 1			Operator Name: Bethlehem Steel Corporation		
Street Address: Burns Harbor Plant, P O Box 248		Phone Number	Street Address: Burns Harbor Plant, P O Box 248		Phone Number
City: Chesterton	State: IN	ZIP CODE: 46304	City: Chesterton	State: IN	ZIP CODE: 46304

IV. Commercial Facility	V. Ownership	VI. Legal Contact	VII. SIC Codes
[ ] Yes [X] No	[X] Private [ ] Federal [ ] Other	[X] Owner [ ] Operator	331

VIII. Well Status *(Mark "x")*

[X] A. Operating	Date Started mo	day	year	[ ] B. Modification/Conversion	[ ] C. Proposed
	03	30	68		

IX. Type of Permit Requested *(Mark "x" and specify if required)*

[X] A. Individual	[ ] B. Area	Number of Existing Wells	Number of Proposed Wells	Name(s) of field(s) or project(s)
		3	0	

X. Class and Type of Well *(see reverse)*

A. Classes(es) (enter codes(s)	B. Type(s) (enter codes(s)	C. If class is "other" or type is code 'x,' explain	D. Number of wells per type (if area permit)
1	W		

XI. Location of Well(s) or Approximate Center of Field or Project

Latitude Deg	Min	Sec	Longitude Deg	Min	Sec	Township and Range Sec	Twp	Range	1/4 Sec	Feet From	Line	Feet From	Line
41	37	58	87	07	08	28	37N	6W	NW	1600	W	1250	N

XII. Indian Lands (Mark 'x')

[ ] Yes
[X] No

XIII. Attachments

(Complete the following questions on a separate sheet(s) and number accordingly; see instructions)
For Classes I, II, III, (and other classes) complete and submit on a separate sheet(s) Attachments A--U (pp 2-6) as appropriate. Attach maps where required. List attachments by letter which are applicable and are included with your application. A B C D F H I K M O P Q R T U (V, W additional sections)

XIV. Certification

I certify under the penalty of law that I have personally examined and am familiar with the information submitted in this document and all attachments and that, based on my inquiry of those individuals immediately responsible for obtaining the information, I believe that the information is true, accurate, and complete. I am aware that there are significant penalties for submitting false information, including the possibility of fine and imprisonment. (Ref. 40 CFR 144.32)

A. Name and Title *(Type or Print)*	B. Phone No. *(Area Code and No.)*
W. N. Bargeron, President	(219) 787-3201
C. Signature: W N Bargeron	D. Date Signed: 11/4/97

EPA Form 7520-6 (Rev. 8-91)

Form Approved. OMB No. 2040-0042. Expires 6-30-98

United States Environmental Protection Agency

Underground Injection Control Permit Application

(Collected under the authority of the Safe Drinking Water Act. Sections 1421, 1422, 40 CFR 144)

I. EPA ID Number

		T/A	C
U	IND003913423		

Read Attached Instructions Before Starting

For Official Use Only

Application approved mo	day	year	Date received mo	day	year	Permit Number	Well ID	FINDS Number

II. Owner Name and Address

Owner Name: Bethlehem Steel Corp. WAL No. 1

Street Address: Burns Harbor Plant, P O Box 248 | Phone Number:

City: Chesterton | State: IN | ZIP CODE: 46304

III. Operator Name and Address

Operator Name: Bethlehem Steel Corp.

Street Address: Burns Harbor Plant, P O Box 248 | Phone Number:

City: Chesterton | State: IN | ZIP CODE: 46304

IV. Commercial Facility

[ ] Yes
[X] No

V. Ownership

[X] Private
[ ] Federal
[ ] Other

VI. Legal Contact

[X] Owner
[ ] Operator

VII. SIC Codes

331

VIII. Well Status *(Mark "x")*

[X] A. Operating — Date Started: mo 09, day 18, year 69

[ ] B. Modification/Conversion

[ ] C. Proposed

IX. Type of Permit Requested *(Mark "x" and specify if required)*

[X] A. Individual [ ] B. Area

Number of Existing Wells	Number of Proposed Wells	Name(s) of field(s) or project(s)
3	0	

X. Class and Type of Well *(see reverse)*

A. Classes(es) (enter codes(s)	B. Type(s) (enter codes(s)	C. If class is "other" or type is code 'x,' explain	D. Number of wells per type (if area permit)
1	W		

XI. Location of Well(s) or Approximate Center of Field or Project

Latitude Deg	Min	Sec	Longitude Deg	Min	Sec	Township and Range Sec	Twp	Range	1/4 Sec	Feet From	Line	Feet From	Line
41	37	45	87	08	13	30	37N	6W	SE	350	E	2300	S

XII. Indian Lands (Mark 'x')

[ ] Yes
[X] No

XIII. Attachments

(Complete the following questions on a separate sheet(s) and number accordingly; see instructions)
For Classes I, II, III, (and other classes) complete and submit on a separate sheet(s) Attachments A--U (pp 2-6) as appropriate. Attach maps where required. List attachments by letter which are applicable and are included with your application. A B C D F H I K M O P Q R T U (V, W additional sections)

XIV. Certification

I certify under the penalty of law that I have personally examined and am familiar with the information submitted in this document and all attachments and that, based on my inquiry of those individuals immediately responsible for obtaining the information, I believe that the information is true, accurate, and complete. I am aware that there are significant penalties for submitting false information, including the possibility of fine and imprisonment. (Ref. 40 CFR 144.32)

A. Name and Title *(Type or Print)*: W. N. Bargeron, President

B. Phone No. *(Area Code and No.)*: (219) 787-3201

C. Signature: W N Bargeron

D. Date Signed: 11/4/97

Form Approved. OMB No. 2040-0042. Expires 6-30-98

EPA

United States Environmental Protection Agency

Underground Injection Control Permit Application

(Collected under the authority of the Safe Drinking Water Act. Sections 1421, 1422, 40 CFR 144)

I. EPA ID Number		T/A	C
U	IND003913423		

Read Attached Instructions Before Starting

For Official Use Only

Application approved mo	day	year	Date received mo	day	year	Permit Number	Well ID	FINDS Number

II. Owner Name and Address			III. Operator Name and Address		
Owner Name: Bethlehem Steel Corp WAL No. 2			Operator Name: Bethlehem Steel Corporation		
Street Address: Burns Harbor Plant P O Box 248		Phone Number	Street Address: Burns Harbor Plant P O Box 248		Phone Number
City: Chesterton	State: IN	ZIP CODE: 46304	City: Chesterton	State: TN	ZIP CODE: 46304

IV. Commercial Facility	V. Ownership	VI. Legal Contact	VII. SIC Codes
[ ] Yes [X] No	[X] Private [ ] Federal [ ] Other	[X] Owner [ ] Operator	331

VIII. Well Status *(Mark "x")*

[X] A. Operating	Date Started mo	day	year	[ ] B. Modification/Conversion	[ ] C. Proposed
	09	18	69		

IX. Type of Permit Requested *(Mark "x" and specify if required)*

[X] A. Individual	[ ] B. Area	Number of Existing Wells	Number of Proposed Wells	Name(s) of field(s) or project(s)
		3	0	

X. Class and Type of Well *(see reverse)*

A. Classes(es) (enter codes(s)	B. Type(s) (enter codes(s)	C. If class is "other" or type is code 'x,' explain	D. Number of wells per type (if area permit)
1	W		

XI. Location of Well(s) or Approximate Center of Field or Project

Latitude Deg	Min	Sec	Longitude Deg	Min	Sec	Township and Range Sec	Twp	Range	1/4 Sec	Feet From	Line	Feet From	Line
41	37	44	87	08	03	29	37N	6W	SW	470	W	2200	S

XII. Indian Lands (Mark 'x')

[ ] Yes
[X] No

XIII. Attachments

(Complete the following questions on a separate sheet(s) and number accordingly; see instructions)
For Classes I, II, III, (and other classes) complete and submit on a separate sheet(s) Attachments A--U (pp 2-6) as appropriate. Attach maps where required. List attachments by letter which are applicable and are included with your application. A B C D F H I K M O P Q R T U (V, W additional sections)

XIV. Certification

I certify under the penalty of law that I have personally examined and am familiar with the information submitted in this document and all attachments and that, based on my inquiry of those individuals immediately responsible for obtaining the information, I believe that the information is true, accurate, and complete. I am aware that there are significant penalties for submitting false information, including the possibility of fine and imprisonment. (Ref. 40 CFR 144.32)

A. Name and Title *(Type or Print)*	B. Phone No. *(Area Code and No.)*
W. N. Bargeron, President	(219) 787-3201
C. Signature: W N Bargeron	D. Date Signed: 11/4/97

SECTION A - AREA OF REVIEW METHODS

The Cone-of-Influence (COI) and corresponding Area-of-Review (AOR) were calculated in Bethlehem Steel's approved Petition for Exemption from Land Disposal Restrictions of hazardous waste. The COI is that area around an injection well in which the pressure increase in the injection zone, caused by injection operations, is capable of driving fluids into an underground source of drinking water (USDW).

The COI was calculated from the reservoir modeling that was performed for the petition. The model was run utilizing conservative values for porosity and permeability in the injection and confining zones, and maximum continuous injection rates and pressures for a period of 20 years, simultaneously into the three Bethlehem Steel injection wells, as well as into the Midwest Steel and Inland Steel injection wells located west of the Burns Harbor Division site.

Figure A-1 is a portion of a map taken from the petition (Figure 1 of Attachment C from "*Response to Comments in Letter From E.P.Watters (EPA REGION V) to J. SAPIA (BETHLEHEM STEEL) DATED DECEMBER 27, 1989*", response dated January, 1990), and depicts pressurization of the injection zone after 20 years of maximum injection.

Table A-1 (taken from the same petition document referenced above) demonstrates the USDW and injection zone parameters, and the calculation utilized to predict the critical pressure buildup necessary to drive fluids into a USDW. The numbers in parentheses above the WPL-1 (SPL-1) values have been added to take into account a deeper top of the injection zone. The calculation indicates that an injection induced pressure increase of 106 psi is required to drive fluids into a USDW.

Reference back to Figure A-1 reveals the areal extent of the COI, at the 106 psi pressurization contour. A COI of between 3.0 and 3.8 miles was utilized in the petition. For the purposes of conservatism and safety, a COI and corresponding AOR of 4.0 miles is used for the artificial penetrations search performed for the re-permitting of Bethlehem Steel's WPL-1, WAL-1 and WAL-2.

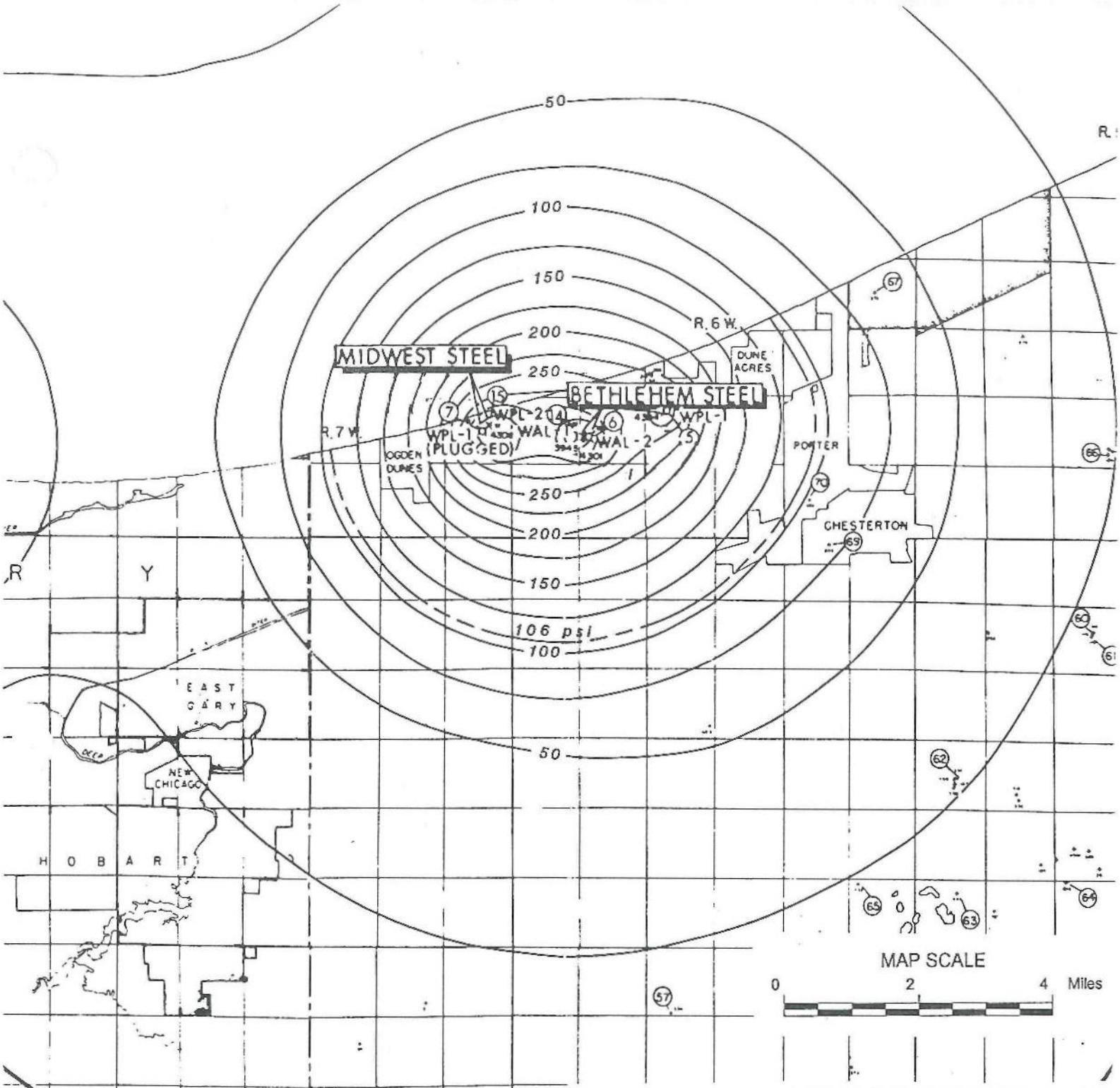

TEXAS WORLD OPERATIONS, INC.

520 POST OAK BLVD., SUITE 450 HOUSTON, TEXAS 77027

BETHLEHEM STEEL CORPORATION
Burns Harbor Division - Indiana

FIGURE A-1

PRESSURE BUILDUP IN THE MT SIMON INJECTION ZONE AFTER 20 YEARS OF CONTINUOUS INJECTION AT MAXIMUM RATES AND THE 106 PSI CONE OF INFLUENCE

Originally Drawn By: Golden StrataServices, Inc.
From Bethlehem's Petition Submittal, Revised 1/90

TABLE A-1

USDW AND INJECTION ZONE PARAMETERS

	Base of Lowermost USDW	Top of Injection Zone for WPL-1	WAL-1	WAL-2
Depth	726'	(2180') 2500'	2182'	2186'
Reservoir Pressure	0.478 $\frac{psi}{ft}$ (1)	0.420 $\frac{psi}{ft}$ (2)	0.420 $\frac{psi}{ft}$ (2)	0.420 $\frac{psi}{ft}$ (2)
Formation Fluid Specific Gravity	1.00	1.04 (3)	1.04 (3)	1.04 (3)
Static Fluid Level (relative to ground)	75'	(-147') -168'	-147	-147'

CALCULATION OF CRITICAL PRESSURE BUILDUP

	WPL-1	WAL-1	WAL-2
Difference in Static Fluid Level between Base of Lowermost USDW and Top of Injection Zone	(222') 243'	222'	222'
Critical Pressure Buildup (4)	(106 psi) 116 psi	106 psi	106 psi

---

(1) Average of drill-stem-test results at 508.8' and 531.9' during completion of the Midwest WPL-2.

(2) Original injection zone reservoir pressure, measured during completion of Bethlehem Steel wells: in WPL-1, 1365 psi at 3250'; in WAL-1, 1429 psi at 3402'; in WAL-2, 1432 psi at 3410'.

(3) Measured at 2790'-2819' (top of Lower Mt. Simon) in Midwest Steel WPL-2, and at 2210'-4292' in Bethlehem Steel WPL-1.

(4) Critical Pressure Buildup = (Difference in Static Fluid Level) x 0.478 psi/ft.

B.1 AREA OF REVIEW MAP

Figure B-1 is a composite of the four most recent 7-1/2 minute US Geological Survey topographic maps that cover the AOR. The area within four miles radius of any of Bethlehem Steel's injection wells was utilized as the AOR. The AOR outline, the boundaries of the Bethlehem Steel Burns Harbor Division property, major structures within the Bethlehem facility, Bethlehem's three Class 1 injection wells, Midwest Steel's active spent pickle liquor well and former spent pickle liquor well (now a Galesville Sandstone monitor well), water bodies, quarries and mines, roads, residences, buildings and other man made infrastructure are depicted on this map.

B.2 ARTIFICIAL PENETRATIONS

Artificial penetrations, typically wells, might provide a pathway for injected wastes to find their way upward from an injection zone and into an underground source of drinking water (USDW), if the wells penetrate the injection or confining zone, and are improperly constructed or plugged and abandoned. In order to verify the safety of the injection operations at Bethlehem Steel's Burns Harbor Division, and the integrity of the injection zone, an extensive search was conducted for artificial penetrations within the AOR.

The search for artificial penetrations was performed in two stages. Initially a search was conducted within a 2-1/2 mile radius. The search was then expanded to a 4 mile radius at a slightly later time.

B.2.1 Summary of Search Protocol

To conduct the search for artificial penetrations, the specific townships, ranges and sections affected by the AOR were determined by comparing current USGS 7-1/2 minute quadrangle maps with the locations of the Bethlehem Steel injection wells.

Following the identification of the area to be included within the AOR, the well information cards, borehole log files and map files of the Indiana Geological Survey were

searched for "deep" wells. The "deep" well files maintained by the Geological Survey include all wells not drilled specifically as water supply wells. All such wells within the AOR were located and identified with a high degree of confidence. The available files were photocopied and divided into the "deep" wells that penetrated the injection or confining zone, and "deep" wells that did not penetrate as far as the confining zone (the upper Eau Claire shale).

Water wells within the AOR were identified by searching the well records submitted by drillers to the Indiana Department of Natural Resources - Division of Water. Water well information retained by the Division of Water has been digitized. Duplicate paper and digital files are kept for wells reported up until 1994. Post 1994 well data is retained in digital format. Many of the paper files are now illegible, missing or otherwise non-reproducible. Therefore, only digital data was retrieved during the search process.

Specific location data for many of the water wells identified is missing. Location data is frequently only provided that identifies the section, township and range in which a well is located. The location of many water wells is therefore only known to within a mile. If a portion of a section fell within the boundaries of the AOR, all water wells identified as being within that section were identified for this artificial penetration search. Please note that there may be additional shallow water wells located within the AOR, but because of missing or incomplete locational data, wells may not have been identified by the database queries.

Data on deep exploration well activity is maintained for public record by the:

Indiana Geological Survey
Energy Section
611 N. Walnut Grove
Bloomington, IN 47405

Data on domestic and commercial water wells and monitor wells is maintained by the :

Indiana Department of Natural Resources
Division of Water
402 W. Washington Street
Indianapolis, IN 46204

B.2.2 Map of Located Artificial Penetrations

Figure B-2 is a map depicting the location of "deep" wells, and the shallow water wells whose locations could be identified with any degree of certainty. Reference numbers posted next to the wells that do not penetrate as deep as the Bethlehem Steel confining zone are indexed to the well data files located in Appendix A of this report.

The only wells within the four mile radius AOR that penetrated the injection or confining zone were the three Bethlehem Steel injection wells currently being permitted, the Midwest Steel SPL-2, and the Midwest Steel Galesville Sandstone Monitor Well which was previously an injection well. None of these wells provides a pathway for fluids from the Bethlehem Steel injection zone to move upward toward a USDW. These wells are clearly identified on Figure B-2. All the other wells within the AOR that were considered "deep" by the Indiana Geological Survey did not penetrate the confining zone.

Data for Porter County indicated that information on a total of 4,350 water wells were on file for the county. Queries made to the digital data bases for both the pre- and post 1994 periods within the affected townships, ranges and sections yielded a total of 362 water wells within the AOR. Only those wells whose locations could be identified with any degree of certainty are plotted on Figure B-2.

B.2.3 Well Data Files in Appendix A

Appendix A-1 includes the records of deep wells that did penetrate at least to the Bethlehem Steel confining zone (5 wells).

Appendix A-2 includes the records of wells the Indiana Geological Survey classified as "deep", but which did not reach the Bethlehem Steel confining zone (9 wells).

Appendix A-3 includes the records of water wells drilled post 1994, within 2-1/2 miles of Bethlehem's injection wells (25 wells).

Appendix A-4 includes the records of wells drilled up until 1994, within 2-1/2 miles of Bethlehem's injection wells (132 wells).

Appendix A-5 includes the records of water wells drilled at any time up until September 1997, in the area between 2-1/2 and 4 miles from Bethlehem's injection wells (205 wells).

Aside from Bethlehem's SPL-1, WAL-1 and WAL-2 wells, there are only two wells within the four mile AOR that penetrate as deeply as the Bethlehem confining zone (upper Eau Claire shale). The Midwest Steel SPL-2 is a permitted active injection well injecting into the lower Mt. Simon Sandstone. The Midwest Steel SPL-1 was an injection well which injected into the Mt. Simon Sandstone and lower Eau Claire Formation prior to being converted into a monitoring well completed in the Galesville Sandstone. No corrective action plan for improperly constructed or unplugged wells is required since there are no known pathways for fluids to migrate from the Bethlehem injection zone upward toward USDWs.

D.1 TOPOGRAPHY

Bethlehem Steel is located in the northwest portion of Indiana on the shoreline of Lake Michigan. It is an area of low relief within the bed of ancient glacial Lake Chicago. Locally, the elevation varies from 10' to 50' above the water level of Lake Michigan.

This area is part of the Northern Moraine and Lake Region which is characterized by a variety of glacial landforms. Three shorelines illustrate the successively lower levels of the ancient lake. In some areas there is as much as a 40' difference in elevation between the present shoreline of Lake Michigan and the relic shorelines. The relic shorelines are capped by sand dunes which trend in an East - West arc.

D.2 REGIONAL HYDROLOGY

A large portion of the information utilized in describing the following regional hydrology in Lake and Porter Counties was obtained from the State of Indiana Geological Survey Special Report No. 11, "Environmental Geology of Lake and Porter Counties, Indiana - An Aid to Planning, 1975".

Approximately 87% of the total domestic water in Lake and Porter Counties is supplied by Lake Michigan. The remaining 13% is derived from ground water. Nearly all the ground water is produced in the southern portion of these two counties from the Quaternary and Siluro - Devonian aquifers.

The shallow Quaternary aquifer in the northern portion of the study area is not extensively utilized in the production of ground water. Cambrian and Ordovician aquifers underlie the shallower aquifers but are not significantly developed in either county. Figure D-1 illustrates the stratigraphic and hydrologic relationships of the Paleozoic and Cenozoic aquifers. Figure D-2 shows the surface and subsurface hydrologic features in Lake and Porter counties.

Quaternary Aquifers - The Quaternary glacial deposits are separated into three aquifers; which are the Calumet, Valparaiso and Kankakee aquifers. Figure D-1 illustrates the geographic and stratigraphic relationships between the three Quaternary aquifers. Figure D-3 presents an idealized north-south cross section through Lake County showing the positions of the unconsolidated aquifers. A map of the potentiometric surface of these aquifers is given as Figure D-4.

Calumet Aquifer - The Calumet water table aquifer is exposed at the surface and is located in the northern portion of Lake and Porter Counties. It extends from Lake Michigan in a wedge shaped area encompassing the northern quarter of Lake County and the northern tenth of Porter County. The Calumet aquifer is a beach deposit consisting of eolian and water -laid fine sands which yield good quality fresh water. The thickness of sand varies from 5' to 75'. An impermeable clay till is the basal unit of this aquifer.

Valparaiso Aquifer - The Valparaiso aquifer is partially confined. It consists of heterogeneous layers of sand and gravel with intermixed clay and silt lenses. Glacial till overlies and underlies the Valparaiso aquifer; however, it is known to crop out in some areas within the Valparaiso Morainal Plain. The aquifer ranges from 10' to 90' thick and is located 10' to 80' below the surface. Water quality is poorer than in the other two Quaternary aquifers.

Kankakee Aquifer - The Kankakee aquifer extends from the Valparaiso Moraine to the Kankakee River. This aquifer is composed primarily of sand, with some gravel and discontinuous silt and clay lenses. It is an unconfined aquifer which outcrops at the surface and is in hydraulic connection with the Valparaiso aquifer as illustrated in Figure D-3. The Kankakee aquifer ranges in thickness from 10' to 50' with very good quality fresh water.

Silurian and Devonian Aquifers - The Silurian dolomite and limestone aquifers include from oldest to youngest: the Brassfield Limestone, Salamonie Dolomite, Louisville Limestone, Wabash Formation, and the Salina Formation. The Devonian deposits which produce ground water include from oldest to youngest: the Detroit River Formation, Traverse Formation and the Antrim Shale. Figure D-1 illustrates the stratigraphic relationships in these Siluro - Devonian aquifers and gives additional information such as water quality, potential underground sources of drinking water (USDW) and lithology.

These Siluro - Devonian aquifers constitute the shallow bedrock aquifers system in Lake and Porter Counties. They are not in hydraulic connection with shallower Quaternary aquifers. These deposits dip to the east and crop out towards the west.

The upper 200' - 300' of the carbonate bedrock system has been weathered and has solution features such as joints and fractures. This zone is the most productive within the shallow bedrock aquifer system. Depth to this aquifer increases from 15' in Kankakee Outwash Plain to 270' in the Valparaiso Moraine in both counties. Water quality is generally good.

Cambro - Ordovician Aquifers - The Cambro - Ordovician aquifers have not been extensively developed due to the great depth to water and the marginal quality of the water.

Underground Source of Drinking Water - A USDW is any aquifer which is potentially capable of yielding usable quantities of ground water (TDS content of less than 10,000 mg/L). Drill stem tests performed by Midwest Steel indicate that the lowermost USDW is below the Silurian-Devonian Carbonates. The depth to the lowermost USDW is estimated to be at the top of the Maquoketa Shale at approximately 726'. Brownfield Ls.

D.3 LOCAL HYDROGEOLOGY

In the area of water quality data, Midwest Steel conducted an extensive testing program to sample all major aquifers between the surface and Mt. Simon injection zone. During the drilling of Midwest Steel's WPL-2, a series of drill stem tests were performed. The results of this sampling gives an in-depth look into the local ground water quality. Table D-1 summarizes the information obtained from the drill stem tests.

During the 1995 installation of the BSC Galesville Sandstone Groundwater monitoring well, near WAL-2, formation fluid samples were recovered from the St. Peter and Franconia Formations. Total dissolved solids for the fluids recovered from the St. Peter and Franconia were 15,600 mg/L and 16,500 mg/L, respectively. Subsequent monitoring of the Galesville Sandstone has yielded an average total dissolved solids concentration of about 13,500 mg/L.

TABLE D-1
SUMMARY OF TDS AND PRESSURE DATA SHALLOW AQUIFERS
SAMPLES TAKEN FROM MIDWEST STEEL WPL-2

FORMATION NAME	DEPTH, FEET	TDS mg/L	PRESSURE psi
Silurian/Dev.	525 - 688*	6120	191
St. Peter Sand	1280 - 1350	12000	441
Galesville Sand	1869 - 1940	13200	704
Eau Claire Sand	2319 - 2400	**	918
Mt. Simon Sand	2794 - 2819	69400	1109

191 / 525 = 0.364 psi/ft

* - lowermost USDW

** - Sampled WPL and not connate water

D.4 REFERENCES

Dune Acres, Ogden Dunes, Portage and Chesterton Quadrangles, Indiana, United Geological Survey 7.5 Minute Series (topographic).

Geological Survey of the State of Indiana, Department of Natural Resources, Geologic Map of the 1° X 2° Chicago Quadrangle, Indiana, Illinois and Michigan, Showing Bedrock and Unconsolidated Deposits, Scale 1:250,000 RGM No. 4, 1970.

Geosciences Research Associates, Inc., An Inventory of Groundwater Data and Aquifer Assessments for Indiana, Prepared for USEPA UIC Program, 1980.

Geosciences Research Associates, Inc., Hydrologic Atlas of Indiana, Prepared for USEPA UIC Program, 1982.

Hartke, E.J., Hill, J.R. and Reshkin, M., Environmental Geology of Lake and Porter Counties, Indiana - An Aid to Planning, State of Indiana Department of Natural Resources Geologic Survey Special Report 11, 1975.

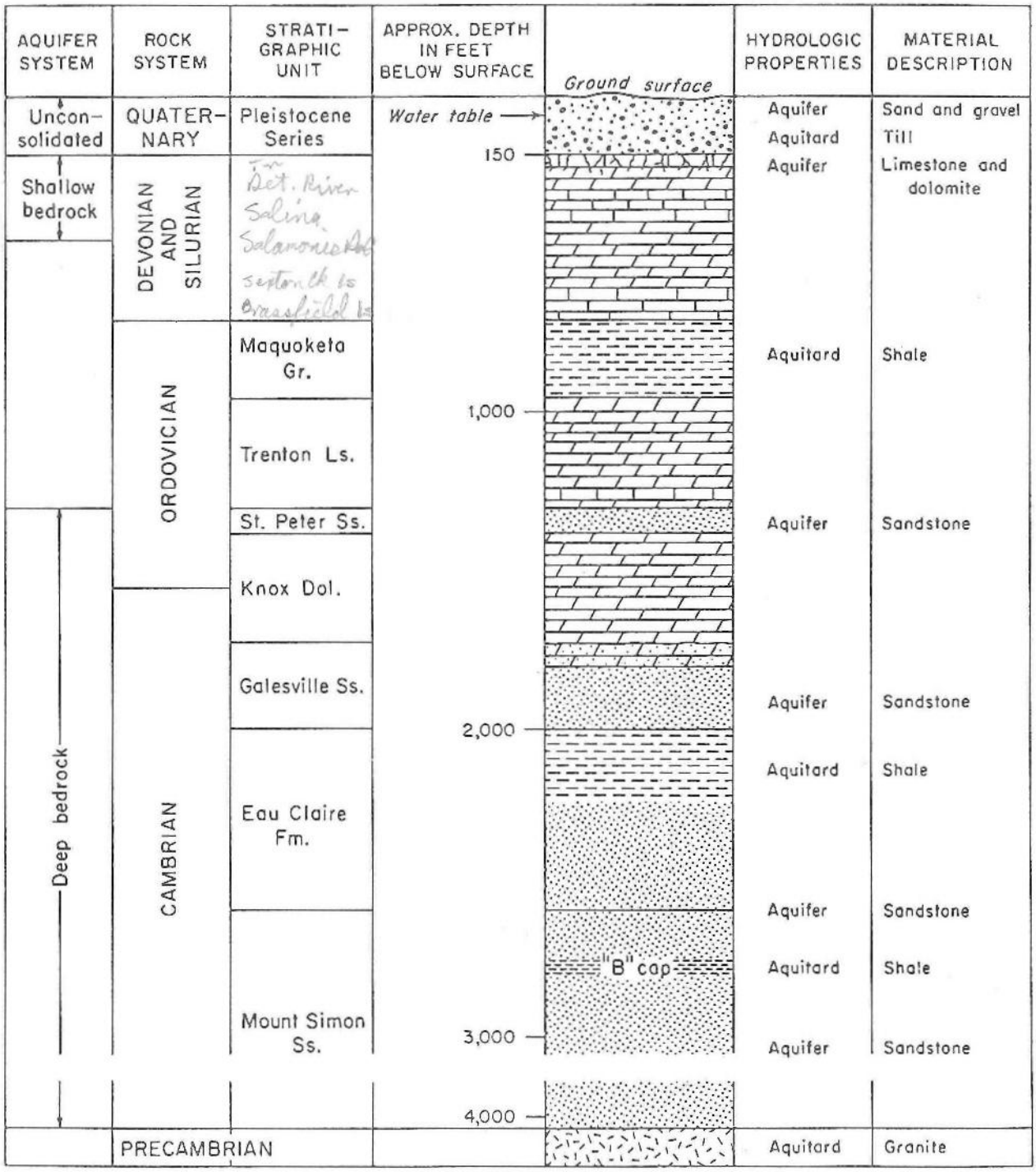

Geologic column from surface of Valparaiso Moraine to Precambrian basement showing locations of aquifer systems, hydrologic properties, and material descriptions.

FIGURE D-1

Source: HARTKE, et al., 1975

DATE: 1/88

TEXAS WORLD OPERATIONS, INC.
Houston, Texas
ORIGINALLY PREPARED BY GOLDEN STRATA SERVICES, INC.

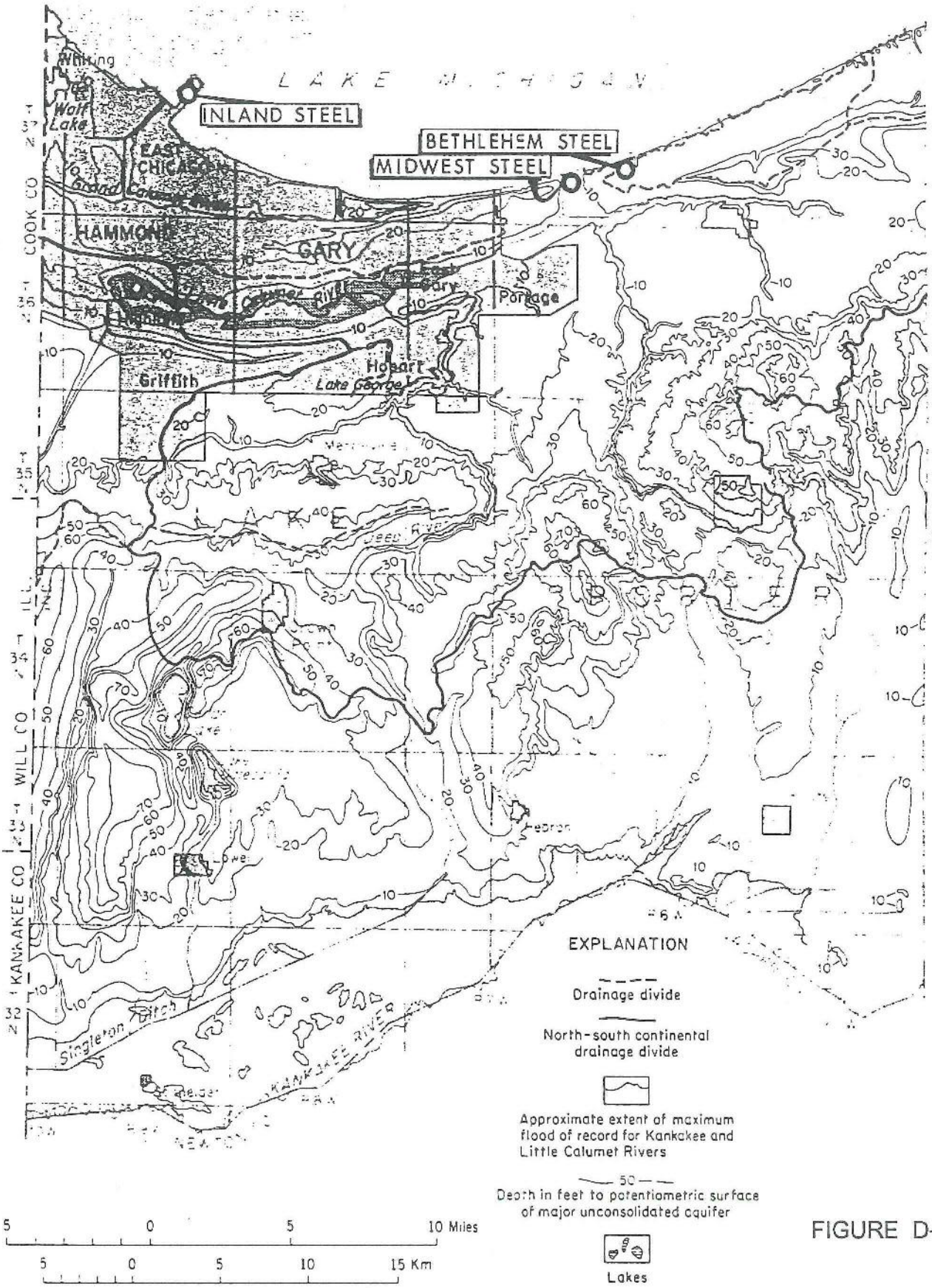

FIGURE D-2

Map showing surface and subsurface hydrologic features in Lake and Porter Counties.

CONFIDENTIAL BUSINES
INFORMATION PROPRIETA

DATE: 1/99

TEXAS WORLD OPERATIONS, INC.
Houston, Texas
ORIGINALLY PREPARED BY GOLDEN STRATA SERVICES, INC.

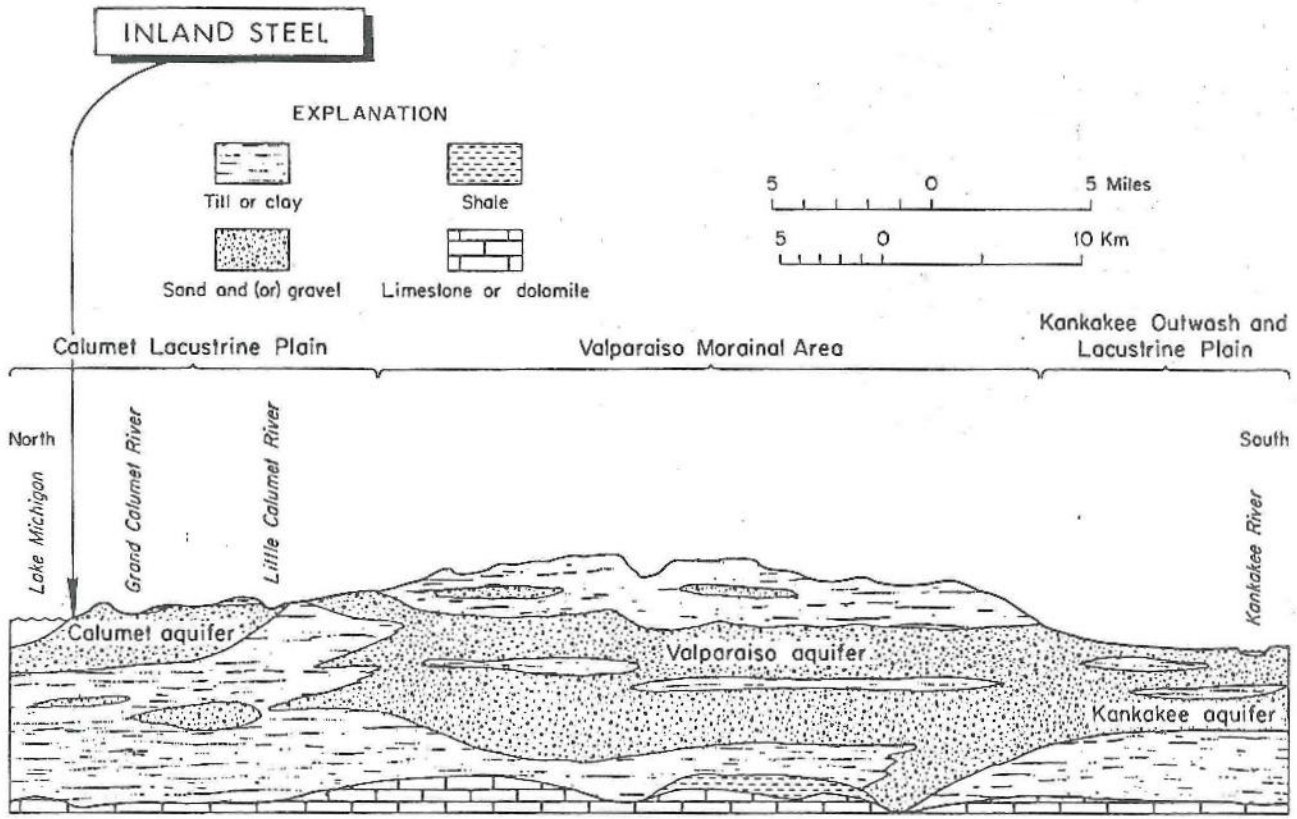

Idealized north-south cross section through Lake County showing positions of unconsolidated aquifers.

Source: HARTKE et al., 1975.

FIGURE D-3

TEXAS WORLD OPERATIONS, INC.
Houston, Texas

ORIGINALLY PREPARED BY GOLDEN STRATA SERVICES, INC.

CONFIDENTIAL BUSINESS INFORMATION PROPRIETARY

DATE: 1/88

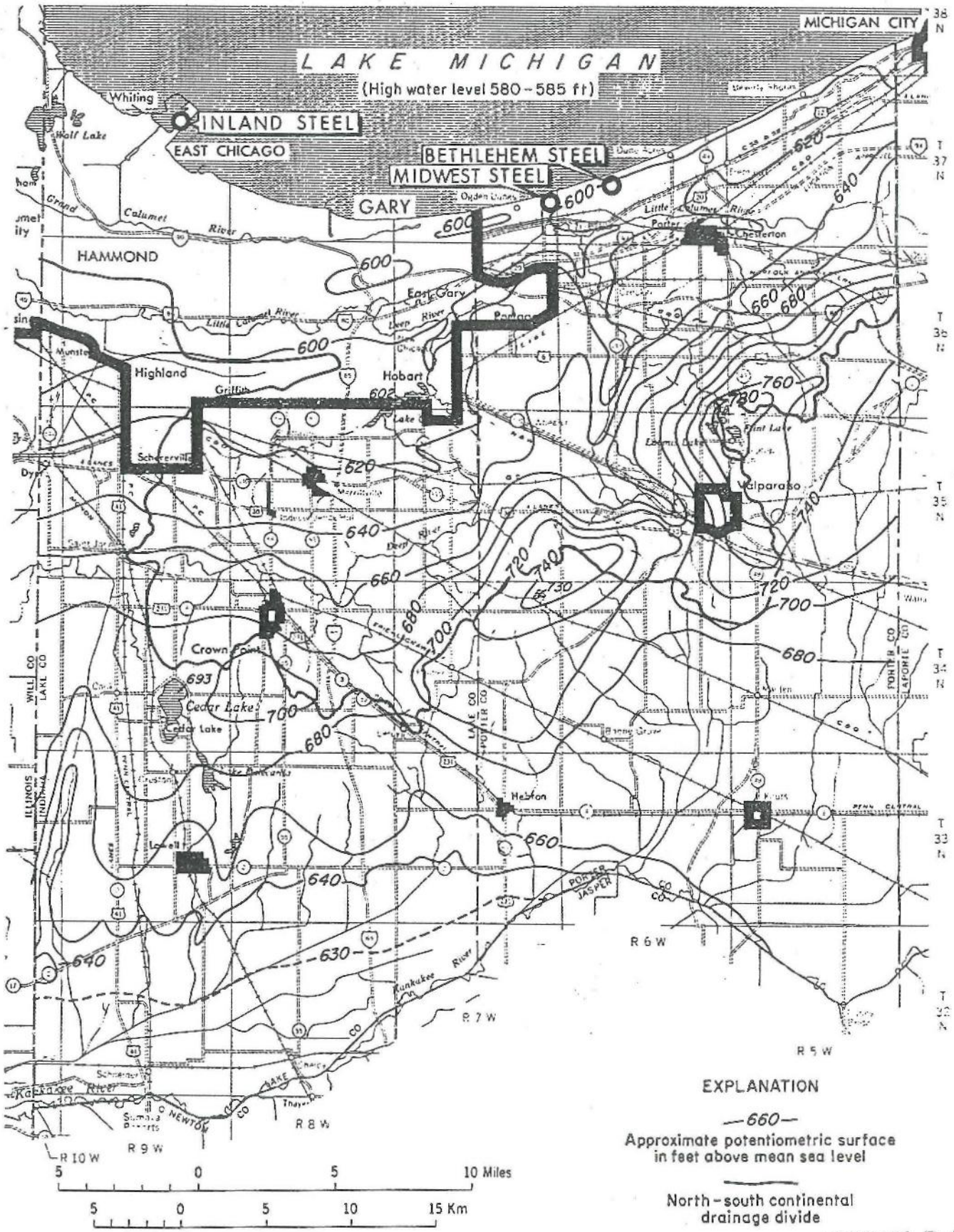

EXPLANATION

—660—
Approximate potentiometric surface in feet above mean sea level

North-south continental drainage divide

FIGURE D-4

Map showing potentiometric surface of unconsolidated aquifer.

TEXAS WORLD OPERATIONS, INC.
Houston, Texas

CONFIDENTIAL BUSINE
INFORMATION PROPRIE

DATE: 1/88

ORIGINALLY PREPARED BY GOLDEN STRATA SERVICES, INC.

SECTION E - NAME AND DEPTH OF USDWs (CLASS II)

Does not apply.

F.1 REGIONAL GEOLOGY

Lake and Porter Counties are structurally located on the northern flank of the Kankakee Arch, a structural high which separates the Michigan Basin to the northeast and the Illinois Basin to the southwest as illustrated in Figure F-1. The subsurface strata within this area includes approximately 4000' of consolidated sediments including sandstone, limestone, dolomite, and shale of Cambrian through Mississippian age as exhibited in the regional northwest - southeast cross section, Figure F-2. These sediments lie unconformably upon Precambrian granite. The structural dip is generally southeastward at approximately 5' to 7' per mile.

Unconsolidated glacial deposits unconformably overlie the consolidated Paleozoic sediments. These glacial sediments were deposited by ice, wind and water during the last major ice advance known as the Wisconsin age of the Pleistocene Epoch. As a result of glacial erosion, the contact between the Pleistocene sediments and the underlying Paleozoic units is locally highly irregular, as illustrated by Figure F-3. Buried glacial valleys and remnant paleotopographical highs carved by the advancing ice sheets are effectively masked by the overlying glacial deposits.

Subsequent to crystallization of the craton, the upper surface of the Precambrian rocks was subjected to extensive erosion. As a result of crustal flexure during late Precambrian and early Cambrian time, a trough was created in northern Indiana and Illinois into which several thousand feet of terrigenous clastic sediments were deposited. This crustal deformation could have resulted from subcrustal convection associated with igneous intrusive activity in the adjacent Michigan and Illinois Basins. Uplift in the central portions of the basins created a relative downwarp along the present day arches, similar to modern day rifting (McGinnis, 1970). McGinnis describes the events responsible for creating the present Arch-Basin complex as follows:

1. (Precambrian) - Accretion and crystallization of the continental crust.
2. (Cambrian) - Rifting and concomitant intrusion and uplift, erosion from uplifts, and deposition in intervening lows.
3. (Ordovician through Paleozoic) - Rift collapse due to weight of high-density

crustal intrusives, sedimentary loading in collapse rifts, isostatic depression and minor crustal block movements, and intrusion along fractures.

4. (Paleozoic through Pleistocene) - Maturity and quiescence.
5. (Pleistocene) - Glacial advance and reactivation of crustal bending.
6. (Holocene) - Glacial rebound.

The tectonic history, outlined above, is accurately reflected within depositional cycles of the sediments. A reversal of the regional structural configuration is indicated, since present day basin centers do not contain the thick areally extensive sandstones of the arch areas. Figure F-4, a generalized cross section of pre-Knox strata across northern Indiana, clearly shows the thickening of the section in a northeasterly direction (Becker, Hreha and Dawson, 1978, p. 15-16). Marine carbonate deposition began in late Cambrian and dominated the sedimentary sequence through the remainder of Paleozoic time.

A depositional hiatus identified in late Ordovician or early Silurian strata marks the formation of the early Kankakee Arch, separating the Michigan and Illinois Basins. The arch existed as a positive depositional feature from Silurian through early Pennsylvanian time and has remained above sea level since the late Pennsylvanian (Dames and Moore, 1971).

Crustal bending, initiated by the advancing Pleistocene glaciers, is evidenced by raised beaches observed along the southern Lake Michigan shoreline. Subsequent glacial rebound is not significant, being only tenths of an inch per year (McGinnis, 1968).

F.2 REGIONAL STRATIGRAPHY

Table F-1 is a stratigraphic chart appropriate for the NE Illinois - NW Indiana area.

Precambrian Granite - The Precambrian Granite forms a nonconformable base upon which the sedimentary strata were deposited and is the oldest unit in the stratigraphic sequence. Throughout most of Indiana, the upper surface of the Precambrian consists of acidic or other granitic rocks. The age of these rocks ranges from 1.1 to 1.3 billion years.

The general configuration of the Precambrian basement rock is illustrated in Figure F-5. This structure contour map indicates a broad structural high located in east-central Indiana. The Precambrian granite lies at a depth of 2500' below sea level along the crest of the high. It is found at a depth of 13,000' below sea level in southwestern Indiana (Becker, Hreha and Dawson, 1978).

Cambrian Mt. Simon Sandstone - The basal sedimentary rock unit in Indiana is the thick and extensive Mt. Simon Sandstone. It does not outcrop and occurs only in the subsurface. It extends throughout Indiana and comprises approximately 1/5 of all sedimentary rocks by volume in the state, as indicated by the stratigraphic diagram, Figure F-6 (Becker, Hreha and Dawson, 1978).

The Mt. Simon Sandstone, based on lithologic characteristics and stratigraphic relationships, is generally divided into the following three sub-units:

- Upper Mt. Simon
- B Cap
- Lower Mt. Simon

The lower Mt. Simon Sandstone serves as the injection interval for SPL-1, WAL-1 and WAL-2.

Its thickness varies considerably from east to west. The Mt. Simon Sandstone thickness ranges from approximately 300' in the east to approximately 2000' in the west as illustrated in the regional isopach map shown in Figure F-7 and the regional stratigraphic cross section, Figure F-4 (Becker, Hreha and Dawson, 1978).

Generally, the Mt. Simon Sandstone is poorly sorted and consists of fine to coarse, angular to subround, quartz sand grains.

Cambrian Eau Claire Formation - The Eau Claire Formation conformably overlies the Mt. Simon Sandstone and the contact between the two formations is transitional. The Eau Claire Formation does not crop out and is believed to underlie all of Indiana. This formation consists of pink dolomitic sandstones; green, black and maroon shales; and tan silty dolomite.

Cambrian Galesville Sandstone - The Galesville Sandstone conformably overlies the Eau Claire Formation. The Galesville Sandstone is present only in northwestern Indiana and is believed to have had a northern source due to directional properties, grain size and thickness. The Galesville Sandstone consists of clean, fine to coarse grained sandstone. The grains are typically rounded and frosted. The sandstone is friable due to being only slightly cemented with dolomite.

Cambrian Ironton Sandstone - The Ironton Sandstone conformably overlies the Galesville Sandstone. This sandstone unit is only present in northwestern Indiana where it is comprised of sandstone and sandy dolomite in the west and becomes more dolomitic and shaley to the southwest. The Ironton Formation consists of white, medium to coarse grained rounded and frosted sandstone. It is interbedded with dolomitic sandstone and pale brown dolomite which is sandy and slightly glauconitic.

Cambrian Franconia Formation - The Franconia Formation conformably overlies the Ironton Sandstone and consists primarily of glaucontic, dolomitic fine grained sandstone and siltstone. It contains more clastic material in its northern extent and grades into a more dolomitic facies southeastward. It is present primarily in the northwestern portion of Indiana.

Cambrian - Ordovician Knox Dolomite - The Knox Dolomite conformably overlies the Franconia Formation within the study area. It is a gray brown finely crystalline dolomite within upper cherty zone. The Knox thickens from about 500' in the northern part of the state to over 1500' in the south.

Ordovician St. Peter Sandstone - the St. Peter Sandstone underlies the Black River Limestone and consists of fine grained sandstone which is moderately to well sorted. It thins to the southeast and is usually less than 25' thick over the majority of the state.

Ordovician Black River Limestone - The Black River Limestone overlies the St. Peter Sandstone. It is a tan, very finely crystalline to lithographic, argillaceous limestone and dolomitic limestone. The thickness of this limestone increase from 100' in the northwest to more than 600' in the southwest part of the state. (Shower, et al., 1970).

Ordovician Trenton Limestone - The Trenton Limestone is a tan, fossiliferous, dolomitic limestone and dolomite which overlies the Black River Limestone. It is absent in the southeastern part of Indiana. It is approximately 200'± thick within the study area.

Ordovician Maquoketa Shale - The Maquoketa Shale conformably overlies the dolomitic phase of the Trenton Limestone but unconformably underlies the Silurian Bedrock. The upper and lower portions of this unit are shale and the middle portion is gray dolomite and calcareous shale.

Silurian and Devonian Bedrock - Silurian and Devonian age limestones, dolomites and shales constitute a shallow bedrock system whose upper surface is largely a preglacial erosional feature. These sedimentary units dip to the east, exposing increasingly older rock at the bedrock surface towards the west. The upper 200' - 300' of these units has been weathered and has limited solution features. Depth to the Silurian and Devonian Bedrock ranges from 15' in the Kankakee Outwash Plain to approximately 270' in the Valparasio Moraine. This unit is considered to be a USDW because its water quality is less than 10,000 ppm total dissolved solids. It is well protected from waste disposal operations by over 1500' of impermeable sedimentary sequences separating these aquifers from the underlying injection zone.

Glacial Deposits - Pleistocene age glacial deposits unconformably overlie the Silurian and Devonian sedimentary units. Although glacial deposits from all four glacial periods probably at one time covered the region, only Wisconsin Age sediments are identified today (Dames and Moore, 1971). The sediments consist of sand, silt, clay till and loess deposits. These sediments infer deposition in the following glacial environments:

1. Eolian (dune) sand
2. Glacial lacustrine drift
    a. Beach Sand
    b. Lake clay
    c. Outwash and beach deposits
3. Glacial till

F.3 REGIONAL STRUCTURAL GEOLOGY

Broad, circular to elliptically shaped intracratonic basins and domes characterize the structure of the continental interior of the region. The Cincinnati Arch and its northwestern extension, the Kankakee Arch, connect the Wisconsin and the Nashville Dome. This dominant anticlinal feature separates the Illinois and Michigan Basins.

Faulting is extremely limited within the area. The closest major fault systems are the inactive Keweenawan Fault system in Upper Michigan, and the active fault complex in southern Illinois. The closest minor faults within the area are the Sandwich Fault zone 50 miles to the west in northwestern Illinois and the Royal Center Fault 60 miles to the southeast (Dames and Moore, 1971). Both of these vertical fault systems probably developed in response to extensional forces generated during subsidence of the adjoining basins. Maximum vertical displacement on the Sandwich and Royal Center Faults are 600' and 100', respectively. Neither of these fault systems is presumed to be active nor will their proximity have any effect on injection operations.

Local areas of intensely fractured strata, known as cryptoexplosive structures, can be found 55 miles to the northwest and 60 miles to the south of the study area. These features are named the Desplains Disturbance and the Kentland Disturbance, respectively. They are thought to have formed in post-Pennsylvanian time and are not directly related to geologic structure or regional tectonic patterns (Dames and Moore, 1971). The processes responsible for the formation of these structures are not fully understood.

F.4 LOCAL GEOLOGY/STRATIGRAPHY

The surficial geology at Bethlehem Steel Corporation's Burns Harbor Division consists of artificial fill and unconsolidated beach deposits such as sand and gravel. Small areas of lake and swamp deposits consisting of muck, peat and marl are also present, indicating poorly drained depressional areas.

Till, silty clay, and intermixed sand and gravel deposited by the Wisconsin glacial advance comprise the majority of surficial deposits to the south of the steel plant. The Kankakee Arch sedimentary sequence outcrops to the northwest and southwest of the

study area. A surface geology map is included as Figure F-8.

The subsurface geology at Bethlehem Steel is described by using well log data and core analysis from the injection wells. The type log, WAL-2, is included as Figure F-9. The type log illustrates the stratigraphic relationships and gives detailed lithologic and structural information.

F.5 LOCAL GEOLOGY - INJECTION ZONE

Cambrian Mt. Simon Sandstone - The basal sedimentary rock unit in Indiana is the thick and extensive Mt. Simon Sandstone. It does not crop out and occurs only in the subsurface. It extends throughout Indiana and comprises approximately 1/5 of all sedimentary rocks by volume in the state (Becker, Hreha and Dawson, 1978).

Its thickness varies considerably from eastern to western Indiana. The Mt. Simon Sandstone gross thickness ranges from approximately 300' in the east to approximately 2000' in the west. It is approximately 1728'± thick at Bethlehem Steel.

In general throughout the study area, the Mt. Simon Sandstone is poorly sorted and consists of fine to coarse, angular to subrounded, quartz sand grains interspersed with locally concentrated shale laminae. Based on different lithologic characteristics and sedimentary features, the formation is usually subdivided into three informal, but commonly accepted units as follows:

- Upper Mt. Simon Sandstone
- "B" Cap Shale
- Lower Mt. Simon Sandstone

Immediate confinement for the lower Mt. Simon injection wells is provided by the "B" Cap Shale, which separates the two units and is included as part of the injection zone.

Examination of a fullhole core taken from the subsurface interval extending from 2790' to 2818.5', during the drilling of Midwest Steel WPL-2, reveals that the Upper Mt. Simon consists of fine to medium grained, moderately to well sorted, moderately clean sandstone. This lithology is consistent throughout the cored interval. Colors vary from

grayish red to yellowish gray. Sedimentary structures grade from laminated, to slightly inclined, to wavy and cross bedded. A shallow marine shelf environment of deposition is inferred for this unit. These deposits could possibly represent relict shoreline deposits which were reworked by currents and waves during a marine transgression.

A shale zone, known as the "B" Cap is found within the upper portion of the formation immediately underlying the Upper Mt. Simon Sandstone. At Bethlehem Steel, the "B" Cap is located at approximately 2660'±, and is approximately 68' thick.

In general, this shale zone is typically dark gray and grayish red and is interbedded with siltstone. The "B" Cap serves as an immediate upper impermeable layer separating the Mt. Simon injection intervals from overlying formations.

During the drilling of Midwest Steel WPL-2, a fullhole core was taken of the "B" Cap from the subsurface interval extending from 2640' to 2669.8'. Examination of the core indicates that the interval can be divided into three major lithologic units as follows:

(2640' - 2647.2') - Cross-bedded sandstone
(2648.2' - 2652') - Laminated shale
(2652' - 2669.2') - Interbedded sandstone/shale

The cross-bedded sandstone unit consists of clean, moderately to well sorted, medium grained, yellowish gray sandstone. The laminated shale unit is characterized by moderately bioturbated shale with thin, light gray sandstone laminae near the base grading upward into more massive and thinly laminated, dark gray shale. The interbedded sandstone/shale unit consists of intensely bioturbated dark gray shales interbedded with fine-grained, light gray sandstones. The lithologic associations and sedimentary structures infer a tidal flat to marsh depositional environment for these units.

The Lower Mt. Simon Sandstone unit (injection interval) ranges from well to poorly sorted, fine-grained to pebbly in texture, and consists of angular to well rounded quartz grains. This portion of the Mt. Simon Formation constitutes the active injection interval for the injection facilities at Bethlehem Steel. The thickness of this unit is presented in the net sand isopach map, Figure F-10.

A local basal arkosic sandstone has been observed in Bethlehem Steel WPL-1. Arkosic sandstone contains abundant pink feldspar and is generally referred to as granite wash. Depositions of this type are typically found in association with intensely eroded granitic rock.

The Mt. Simon Sandstone is considered well suited as a disposal reservoir because of its large areal extent, good permeability, and the presence of thick confining layers above, and TDS content of over 10,000 mg/L in the ground water. In addition, there are no complex geologic structures, such as faults or diapirs which may affect injection well operations.

F.6 TOP OF THE INJECTION ZONE

To insure no migration of hazardous waste out of the injection zones, the top of the injection zone is above the maximum vertical distance that waste will migrate out of the uppermost injection interval within 10,000 years, as demonstrated in the BSC petition. The depth to the top of the injection zone has been defined based upon the results of computer modeling (See BSC Petition). These depths are listed below:

WELL NO.	TOP OF INJECTION ZONE DEPTH, FT
SPL-1	2180'± Top of Eau Claire Sand
WAL-1	2180'± Top of Eau Claire Sand
WAL-2	2180'± Top of Eau Claire Sand

F.7 LOCAL GEOLOGY - CONFINING ZONE

Cambrian Eau Claire Formation - The Eau Claire Formation consists of a thick laterally extensive shale interval interspersed with sand and silt layers. The top of the confining zone in this case is designated as the top of the Eau Claire Shale. The net

impermeable shale thickness included within the confining zone ranges from 250' to 279' as illustrated in Figure F-11.

The Eau Claire Formation conformably overlies the Mt. Simon Sandstone and the contact between the two formations is transitional. Figure F-12 is a structure contour map on top of Eau Claire Formation. The Eau Claire Formation does not crop out and is believed to underlie all of Indiana. This formation consists of pink dolomitic sandstones; green, black and maroon shales; and tan silty dolomite.

The upper Eau Claire Formation contains over 200' of shale, informally referred to as the Eau Claire Shale, which serves as a confining layer to the basal Eau Claire Sands and Mt. Simon Sandstone injection zone. This informally designated member of the Eau Claire was cored in Midwest Steel WPL-2 to provide detailed analysis of the confining ability of the unit. The section consists primarily of a repetitive sequence of very fine-grained sandstones interbedded with thin siltstone and shale. The sandstone layers are light brown to gray in color and display very fine, horizontal to slightly inclined laminae. Interbedded dark gray to black shales are common throughout the interval, but individual layers are seldom more than 20 millimeters in thickness.

Sedimentary features and lithologic relationships suggest that deposition occurred in a shallow marine environment. More specifically, the cored interval could reflect delta front deposition or shallow shelf environment subjected to periodic, intense storm activity.

Gross thickness of the Eau Claire Formation ranges from 535' at Inland Steel, to 552' at Midwest Steel, and 589' at Bethlehem Steel.

F.8 LOCAL STRUCTURAL GEOLOGY

The geological study area is located on the northeastern edge of Kankakee Arch, a structural high which separates the Michigan Basin to the northeast and the Illinois Basin to the southwest. The regional structural dip of the major consolidated sedimentary sequences is approximately 5' - 7' per mile to the southeast. Within the area of review there is a lack of complex geologic structures such as faults or folds. The Lower Mt. Simon

Sandstone injection interval is relatively flat with a shallow dip of approximately 10' per mile to the south, as seen in the structure contour map, Figure F-13. It is areally extensive and not bounded by faulting or folding which might pose a constraint to injection operations.

Impermeable Pre-Cambrian granite exerted a significant structural influence on depositional patterns of the overlying sedimentary veneer. The influence of major regional structural features, such as the Kankakee Arch and the Michigan and Illinois Basins, during the deposition of the Mt. Simon Sandstone is reflected in the present day structural contour map, Figure F-7. As a result of this influence, the thickness of the Mt. Simon varies from east to west, apparent from the north-south cross section Figure F-14, and the west-east cross section, Figure F-15. It is approximately 1700' thick in the western portion of Porter County in the vicinity of Bethlehem Steel, and thickens to 1990'± at Inland Steel in adjacent Lake County to the west. Figure F-16 provides the location of wells used to construct the geologic cross section.

F.9 CHARACTERISTICS OF THE INJECTION AND CONFINING ZONES

F.9.1 Permeability (k)

Permeability values for the Mt. Simon Sandstone were obtained from two fullhole cores taken from Midwest Steel's WPL-2 located less than 2 miles to the west of Bethlehem Steel's Burns Harbor Facility. This information was supplemented by additional fullhole data from Inland Steel and Bethlehem Steel. Data is taken from Bethlehem's 1990 no migration petition for exemption. The effective liquid permeability was measured to be:

* 15-25 millidarcies (md) to HCl,
* 30-95 md to H_2SO_4, and
* 20 md to waste ammonia

Extensive whole core analysis is described in the Core Laboratories report in the Bethlehem Steel No Migration Petition, Appendix 6-I (Volume 4).

F.9.2 Net Sand (h)

The effective thickness of porous sand available in the Mt. Simon Sandstone injection interval is approximately 1300 feet at Bethlehem Steel.

Porous sand thickness was determined by the use of a neutron log from Bethlehem Steel's WAL-1.

F.9.3 Summary of Core Analysis Data from Midwest Steel WPL-2

The Midwest Steel WPL-2 was drilled the summer of 1987 and a series of six fullhole conventional cores were taken from this well. These cores were shipped to Core Laboratories located in Houston, Texas for testing and representative portions were chosen for additional testing and analysis. A description of these tests and results for each core is summarized in the following sections of this report. A complete and comprehensive report prepared by Core Laboratories provides detailed information concerning test procedures and core analysis and is included as Appendix 6-I (Volume 4) of the Bethlehem Steel No Migration Petition.

Lithologic Determination - Each of the fullhole cores obtained was visually observed and its lithologic makeup described. A lithologic log was then generated for each cored interval to illustrate lithologic changes and sedimentary features present within each core. A lithologic description for each core is given.

Petrographic Analysis - Representative sections from each core were chosen for thin section analysis, X-ray diffraction (XRD) analysis, and Scanning Electron Microscopy (SEM) analysis. Each sample was then analyzed before and after exposure to waste sulfuric acid, waste hydrochloric acid and waste ammonia. Grain size and shape, mineralogical composition, and sedimentary fabric were determined for each sample analyzed.

Reservoir Properties - Selected representative samples from each core were tested for permeability and porosity characteristics. Selected samples were tested for permeability to air, formation brine, waste hydrochloric acid, waste sulfuric acid and waste ammonia liquor. These results are discussed and summarized in the following sections of this report.

Rock Mechanics - One sample from each core was selected for acoustic wave analysis. All tests were run at a confining pressure of 1500 psi and a pore pressure of 880 psi. Samples were subjected to both compressional and shear waves tests for Poisson's Ratio, Bulk Modulus, Young's Modulus, and Shear Modulus values for the Eau Claire Shale, Mt. Simon "B" Cap and Upper Mt. Simon.

Eau Claire Formation - Core 1 was taken in a siliciclastic portion of the Eau Claire Formation from the depth interval 2070.0' - 2099.7' in Midwest Steel's WPL-2. The cored interval is informally referred to as the Eau Claire "Shale", and represents a part of the confining zone. Core 2 was taken from a dolomite sandstone sequence of the Eau Claire Formation from the depth interval 2180' to 2204.7'.

Eau Claire Lithology - Visual observation of the unslabbed Eau Claire core indicates that this interval consists primarily of very fine-grained sandstones with thinly interbedded siltstones and shales. The light brownish gray sandstones tend to display very fine, horizontal to slightly inclined laminae. Interbedded dark gray to black shales are common throughout the interval, but seldom exceed 20 mm in thickness. Overall, this interval appears to be a rather repetitive sequence of interbedded sandstone and shale.

Analysis of observed sedimentary features and lithologic relationships suggests that these shales were probably deposited in a shallow marine environment. The cored interval could reflect delta front deposition, or possibly shallow shelf sedimentation in response to intense periodic storm activity.

Eau Claire Petrography - Two sample depths from the Eau Claire core were selected for integrated petrographic analyses. Sample chips were cut from the top of these test segments both from Core 1 were identified as a silty shale and a laminated siltstone. Thin section and XRD analyses reveal that the core samples after exposure to waste hydrochloric acid are apparently unaffected and exhibit no mineralogical changes. Quartz, feldspar, clay, and mica grains adjacent to the waste exposure show no evidence of dissolution or alteration, and no new mineral precipitates were identified as having resulted from the exposure. Similar results were obtained following exposure to waste ammonia.

Eau Claire Reservoir Properties (Confining Zone) - Whole core samples from the Eau Claire No. 1 were chosen for permeability testing with simulated formation brine and

strong hydrochloric acid and waste ammonia liquor. Specific liquid vertical permeability to simulated formation brine was less than 1 X 10^{-6} md, while specific liquid permeability to strong hydrochloric acid was less than 5 X 10^{-6} md. Liquid permeability to waste ammonia was less than 2 X 10^{-6} md.

Mt. Simon Sandstone "Top Core" (Containment Interval) - Core No. 3 was taken from the depth interval 2461' - 2491' in Midwest Steel's WPL-2 in a shale and sandstone sequence of the Mt. Simon Sandstone. The cored interval represents the uppermost portions of the Mt. Simon. This section is referred to as the Mt. Simon Top.

Mt. Simon Top Lithology - The Mt. Simon Top core can be divided into four major lithologic units based upon a visual examination. These included, from the top to bottom:

1. Sandstones with interbedded shales
2. Shales with interbedded sandstones
3. Cross bedded sandstone
4. Sandstone with interbedded shale

The uppermost sandstone unit consists of light gray, moderately sorted, very fine to fine grained sandstones with thinly interbedded, medium gray to dark gray bioturbated shales. Shale is the dominate lithology in the second unit.

The crossbedded sandstone unit underlies the shales. It is greenish gray to light gray sandstone and coarsens upward. Shale clasts and shell fragments are common. The lowermost sandstone unit is similar to the uppermost sandstone unit previously described.

Based on the observed sedimentary features and stratigraphic relationships, the Mt. Simon Top is considered to represent a tidal flat depositional unit.

Mt. Simon Top Petrography - Two sample depths from the Mt. Simon Top Core were chosen for integrated petrographic analysis. Sample chips were cut from the top of each test segment both before and after exposure to strong hydrochloric acid and waste ammonia. The before and after samples were subjected to detailed thin section analysis and x-ray diffraction (XRD) analysis. Scanning Electron Microscopy (SEM) was performed on a selected sample.

The Mt. Simon Top samples appeared to be unaffected by the strong hydrochloric acid and waste ammonia. The core analysis states that the tested samples are composed of mud shale with good caprock quality.

Mt Simon Top Reservoir Properties - Four samples from the Mt. Simon Top were chosen for permeability testing to both strong hydrochloric acid and waste ammonia. Vertical liquid permeability for all cases was less than 2×10^{-4} md.

"B" Cap Core (Containment Interval) - Core 4 was taken from the depth interval 2640.0' - 2669.8' in the Midwest Steel WPL No. 2, in a relatively shale-rich ("B" Cap) portion of the Mt. Simon Sandstone. This core section represents the primary hydraulic barrier/aquiclude for waste containment within the injection zone.

"B" Cap Lithology - Examination of the "B Cap" prior to slabbing indicates that the interval can be divided into three major lithologic units, from top to bottom:

1. cross-bedded sandstone,
2. laminated shale, and
3. Interbedded sandstone/shale

The cross-bedded sandstone unit (2640.0' - 2647.2') consists of matrix-free, moderately to well sorted, medium grained yellowish gray sandstone. The laminated shale unit (2648.2' - 2652.0') is characterized by moderately bioturbated shales with thin, light gray sandstone laminae near the base, passing upward into more massive and/or very thinly laminated, dark gray shale. The interbedded sandstone/shale unit (2652.0' - 2669.2) is composed of intensely bioturbated dark gray shales and interbedded fine-grained, light gray sandstones.

Observed lithologies and sedimentary features suggest that deposition of this interval occurred in a tidal flat to marsh environment.

"B" Cap Petrography - Two sample depths from the Mt. Simon "B Cap" core were chosen for integrated petrographic analyses. Sample chips were cut from the top of each test segment both before and after exposure to strong hydrochloric acid and waste

ammonia. The before and after sample chips were subjected to detailed thin section analysis and x-ray diffraction (XRD) analysis. Scanning Electron Microscopy (SEM) analysis was performed only on a selected chip.

The two samples of Mt. Simon "B Cap" were determined to be very well lithified claystone (2647.5") and sandy shale (2655.5'). As was the case for the Eau Claire "Shale" samples discussed previously, the Mt. Simon "B Cap" samples showed no visible signs of alteration as a result of their contact with strong hydrochloric acid or waste ammonia.

"B" Cap Reservoir Properties - Four samples from the Mt. Simon "B" Cap were chosen for permeability testing to both strong hydrochloric acid and waste ammonia in addition to simulated formation brine. Specific liquid vertical permeability for all cases was less than 2×10^{-6} md.

Lower Mt. Simon Sandstone (Injection Interval) - Core 5 was taken in a sandstone rich portion of the Mt. Simon Sandstone (Cambrian), from the depth interval 2790.0 - 2818.5' in Midwest Steel's WPL-2. The cored interval represents part of the waste injection interval for Bethlehem Steel's WAL-1, WAL-2, and SPL-1.

Lower Mt. Simon Lithology - Visual observation of the unslabbed Mt. Simon core indicates that this interval consists of fine to medium grained, moderately to well sorted, relatively matrix-free sandstone. No significant changes in lithology were noted throughout this continuous sandstone interval with the exception of color changes and slight variations in bedding characteristics. Colors ranged from grayish red to yellowish gray and bedding varied from laminated, to slightly inclined, to wavy and cross-bedded.

The inferred depositional environment for this interval is believed to have been a shallow marine shelf. Core 5 sandstones may have an overall sheet sand geometry, and represent relict shoreline deposits that have been submerged and reworked by currents and/or waves following a marine transgression.

Lower Mt. Simon Petrography - Two sample depths from the Mt. Simon core were selected for integrated petrographic analyses (2796.4' and 2801.3'). Conventional core analysis plugs from these depths yielded the highest porosities (14.3% and 17.5%

respectively) and permeabilities (174 md and 108 md respectively) of any of the plugs sampled from Core 5. Both of these samples were mottled red and white, moderately well lithified, fine to medium-grained sandstones. Overall, the samples are moderately to moderately well sorted with detrital matrix content ranging from 0 to 7%. Both of these samples are classified as quartzarenites with monocrystalline quartz being the most abundant detrital component. Quartz overgrowths are the major cementing agent in the Mt. Simon samples and small amounts of authigenic illitic clay and finely crystalline hematite are also present as cement. Total visible porosity ranges from 10-15% in the samples studied, with virtually all void space being intergranular in nature. Integrated petrographic analyses indicate that exposure to waste sulfuric acid had only negligible effects on the texture and composition of the sample from 2796.4'. Observation in thin section revealed no evidence of grain or cement dissolution, and no reaction precipitates were detected by either thin section or XRD analyses. SEM analysis, however, detected trace amounts of a finely crystalline mineral believed to be marcasite. Because it is present in such small quantities and because no drop in permeability was registered in the plug sample during waste throughput, the marcasite is thought to have virtually no effect on reservoir quality. Exposure of the sample from 2801.3' to strong waste hydrochloric acid produced more notable effects; the plug sample displayed a distinctive orange-yellow stain after waste throughput. Thin section analysis showed that the stain is found nearly exclusively on detrital and authigenic illite in the sandstone. In addition, a significant drop in permeability occurred in the plug sample during waste throughput, possibly due to the formation of the staining agent, iron oxide.

Lower Mt. Simon Reservoir Properties - One sample from the Mt. Simon was chosen for permeability testing to both simulated formation brine and strong hydrochloric acid. The sample from 2801.3' registered values of 42 md to brine and 15 md to strong waste hydrochloric acid. As discussed in the petrography section, it is believed that an iron oxide, precipitated upon illite grains present in the Mt. Simon, is responsible for the reduced permeability of the formation to the waste acid.

F.10 GEOLOGIC SUMMARY AND ENVIRONMENTAL ASSESSMENT

Based on electric log profiles, scale, geometry, thickness and morphology, the

injection zone and confining zone within the geological study area function as excellent injection and confining zones due to their:

1. Thick continuous nature (Figure F-17)
2. Appropriate porosity and permeability characteristics
3. Large areal extent
4. Confinement above and below by thick, areally extensive, impermeable layers.
5. Total dissolved solids content above 10,000 ppm in the injection zone.
6. Absence of faulting

F.11 REFERENCES

Becker, L.E., Hreha, A.J., and Dawson, T.A., Pre-Knox (Cambrian) Stratigraphy in Indiana, Department of Natural Resources Geological Survey Bulletin 57, 1978.

Dames and Moore, Bailly Generating Station Nuclear- Preliminary Safety Analysis Report, Bailly Generating Station-Environmental Report, submitted to the Atomic Energy Commission by Northern Indiana Public Service Company, 1971.

Geosciences Research Associates, Inc., Hydrologic Atlas of Indiana, Prepared for USEPA UIC Program, 1982.

Hartke, E.J., Hill, J.R. and Reshkin, M., Environmental Geology of Lake and Porter Counties, Indiana - An Aid to Planning, Department of Natural Resources Geologic Survey Special Report 11, p. 57, 1975.

Map of Indiana Showing County Boundaries and Township and Range Lines, Department of Natural Resources Geologic Survey, Bloomington, Indiana, January 1952.

Schneider, A.F. and Keller, S.J., Geologic Map of the 1° X 2° Chicago Quadrangle, Indiana, Illinois and Michigan, Showing Bedrock and Unconsolidated Deposits. Department of Natural Resources Regional Geologic Map No. 4, Chicago Sheet, 1970.

Shaver, R.H., et al., Compendium of Rock-Unit Stratigraphy in Indiana Department of Natural Resources Geologic Survey Bulletin 43, 1970.

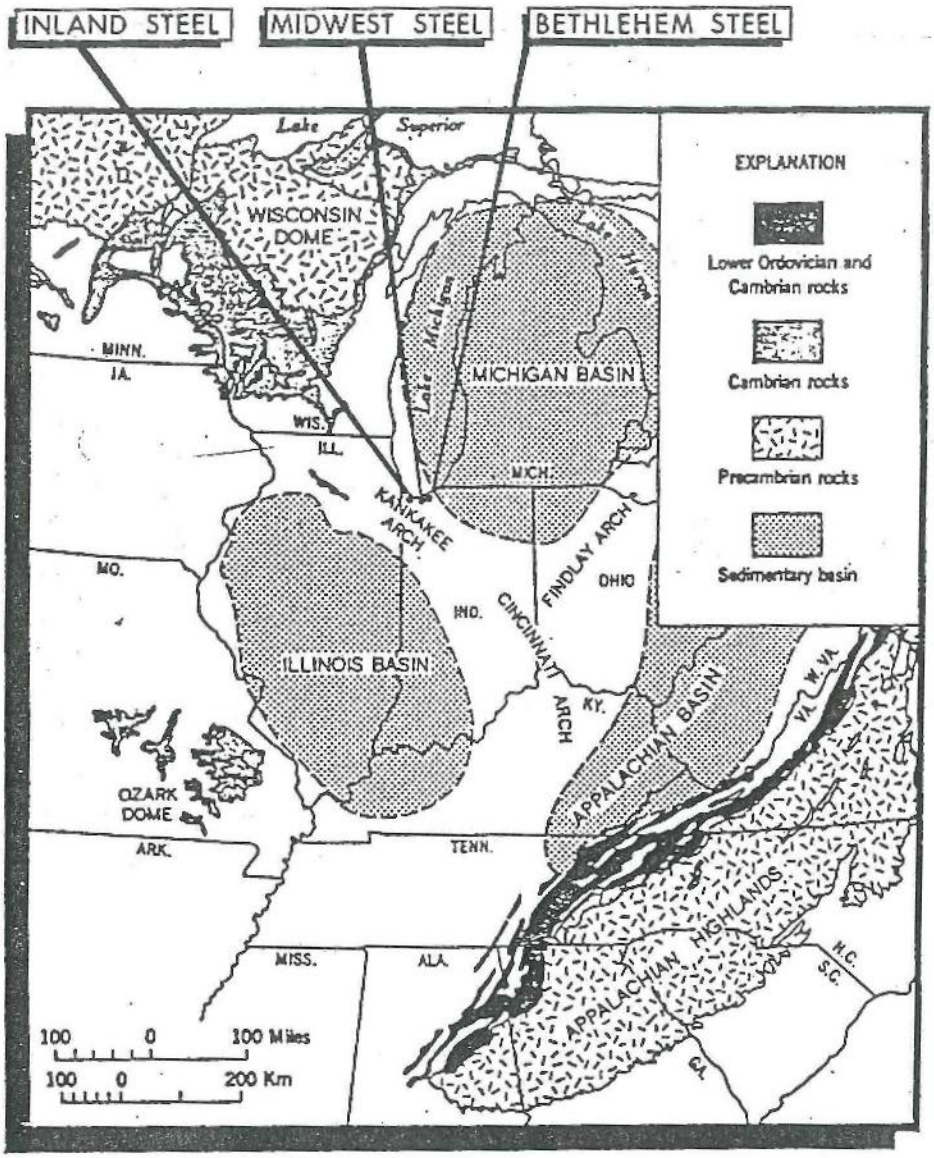

Outcrops of Precambrian and early Paleozoic rocks in the central and eastern United States after Goddard and others (1965) and structural features modified from Landes (1970).

TEXAS WORLD OPERATIONS, INC.
Houston, Texas

STATE OF INDIANA

REGIONAL GEOLOGY
GREAT LAKES

FIGURE F-1

DATE : 1/88

CONFIDENTIAL BUSINESS
INFORMATION PROPRIETARY

ORIGINALLY PREPARED BY GOLDEN STRATA SERVICES, INC.

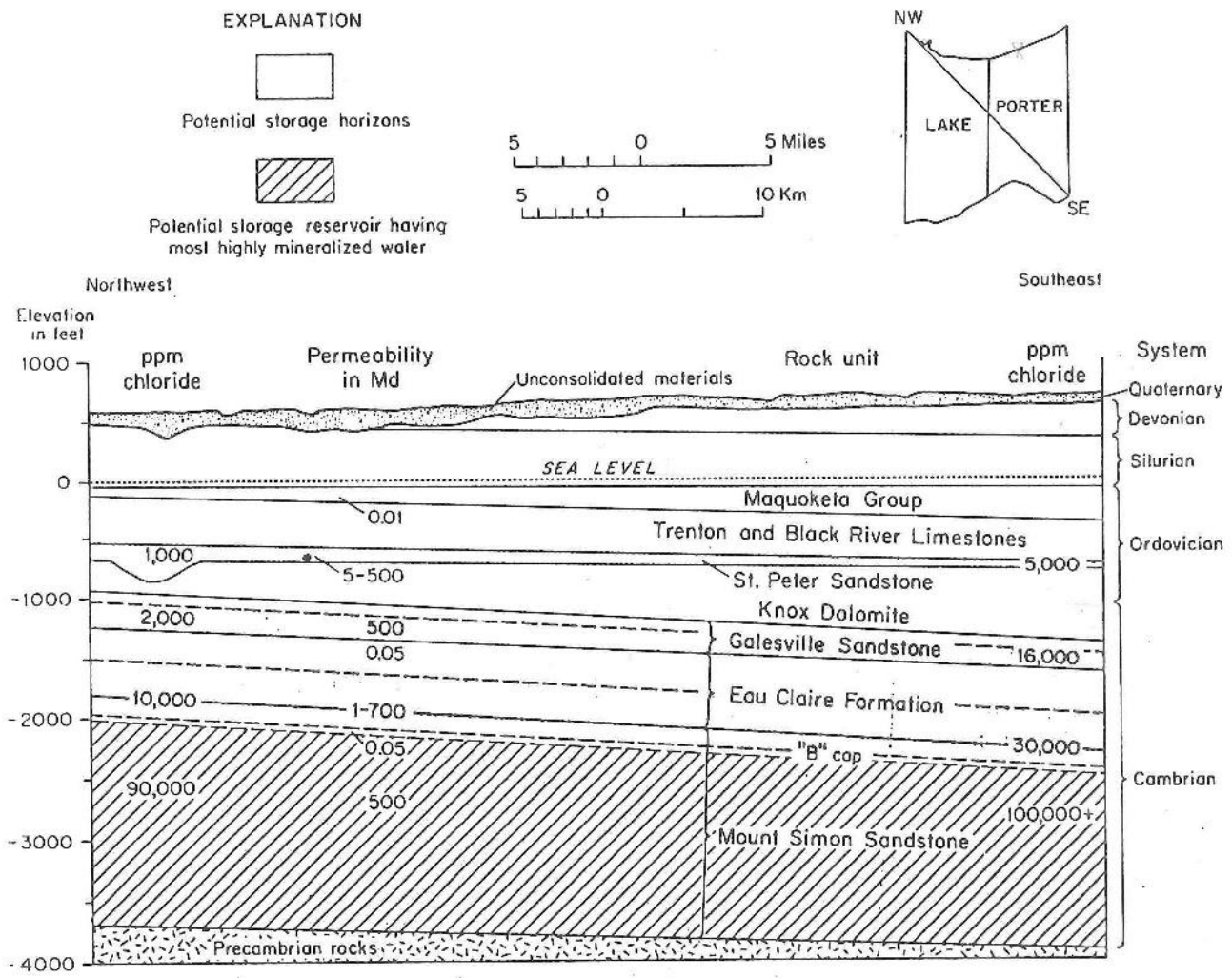

Northwest-southeast cross section showing structure, approximate permeability, and water quality in deep bedrock aquifer.

FIGURE F-2

CONFIDENTIAL BUSIN
INFORMATION PROPRIE

TEXAS WORLD OPERATIONS, INC.
Houston, Texas

ORIGINALLY PREPARED BY GOLDEN STRATA SERVICES, INC.

DATE: 1/88

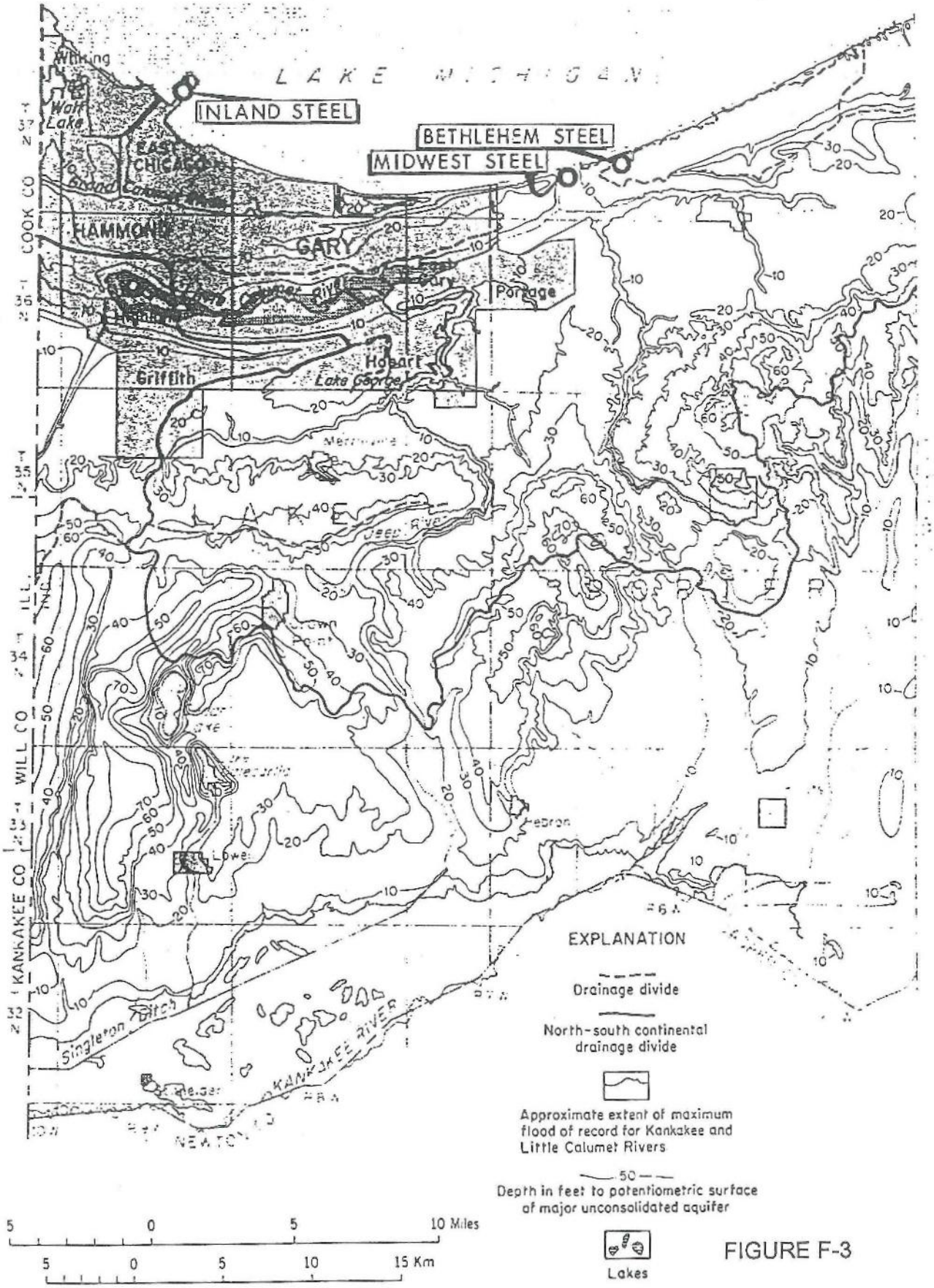

FIGURE F-3

Map showing surface and subsurface hydrologic features in Lake and Porter Counties.

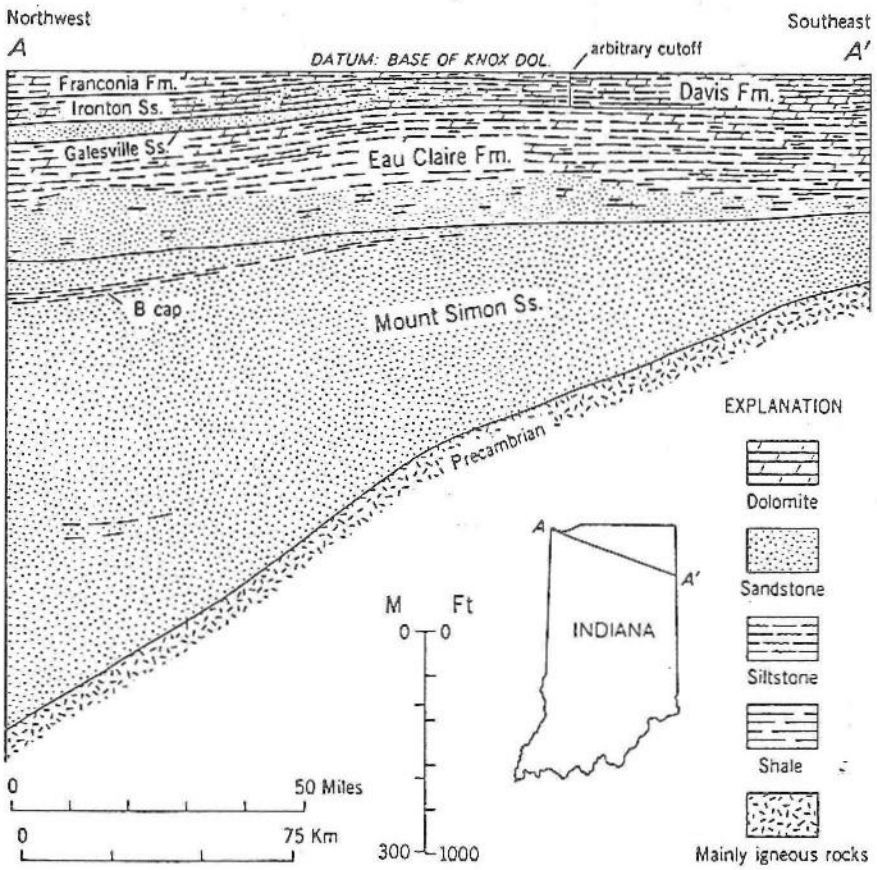

Generalized cross section of pre-Knox strata across northern Indiana.

FIGURE F-4

CONFIDENTIAL BUSINESS
INFORMATION - PROPRIETARY

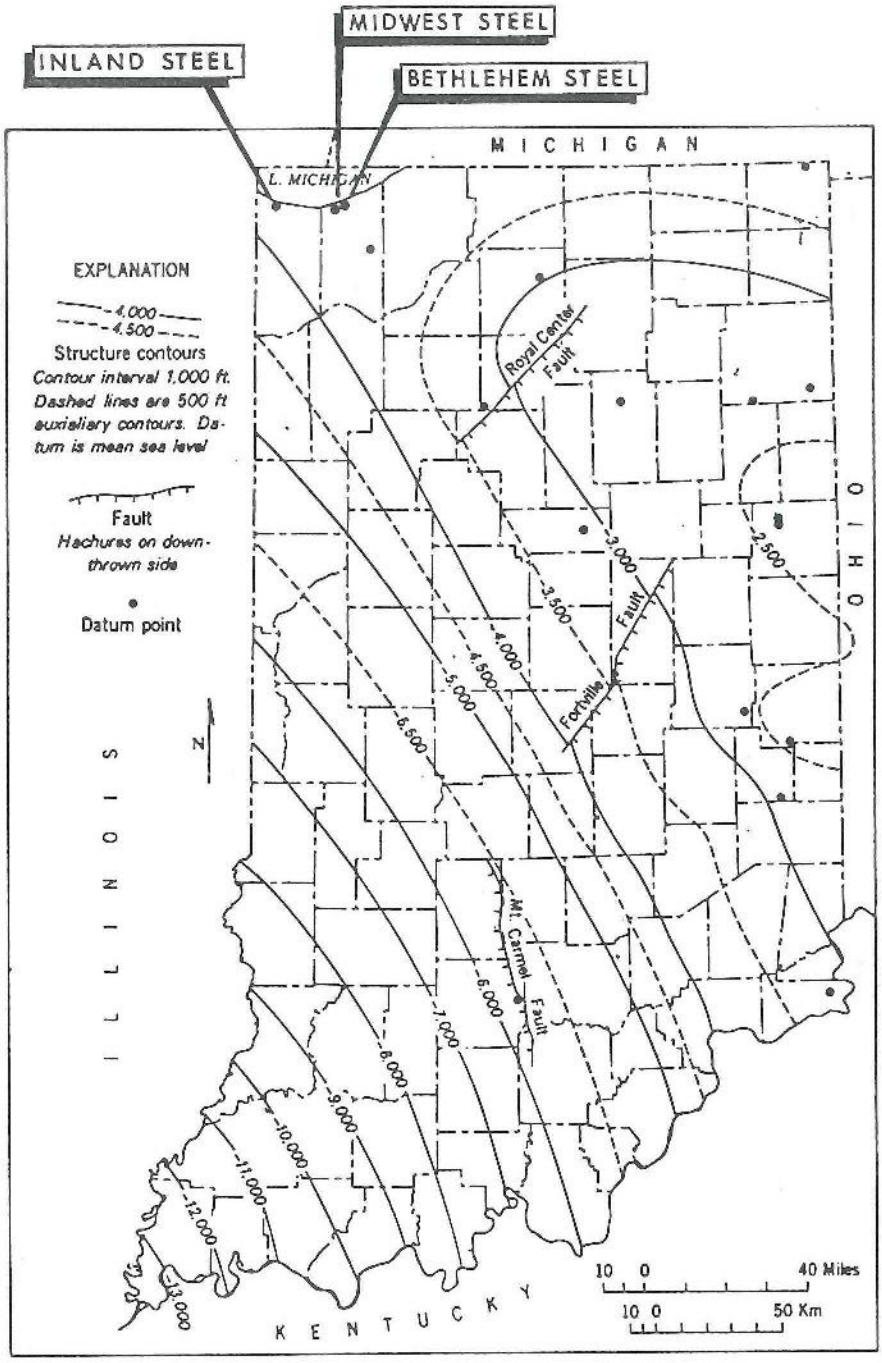

TEXAS WORLD OPERATIONS, INC.
Houston, Texas

INDIANA REGIONAL GEOLOGY

FIGURE F-5

STRUCTURE ON TOP OF THE PRECAMBRIAN BASEMENT

DATE 1/83

ORIGINALLY PREPARED BY GOLDEN STRATA SERVICES, INC.

Source: BECKER, et al., 1978

CONFIDENTIAL BUSINESS
INFORMATION PROPRIETARY

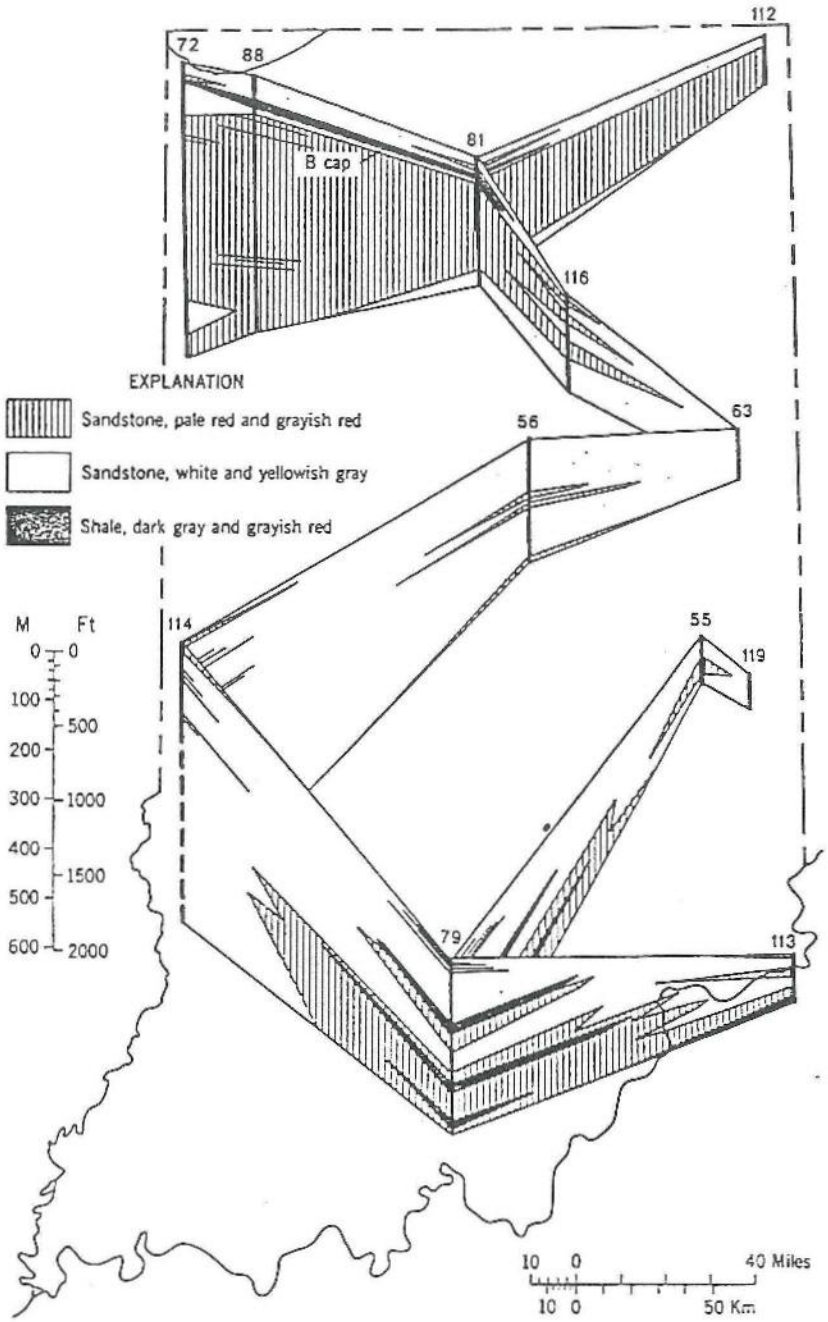

Stratigraphic panel diagram of the Mount Simon Sandstone in Indiana. Datum point numbers correspond to those on plate 1.

FIGURE F-6

TEXAS WORLD OPERATIONS, INC.
Houston, Texas
ORIGINALLY PREPARED BY GOLDEN STRATA SERVICES, INC.

PRINTED BY AUTHORITY OF THE STATE OF INDIANA
EDGAR D. WHITCOMB, GOVERNOR

GEOLOGICAL SURVEY
JOHN B. PATTON, STATE GEOLOGIST

DEPARTMENT OF NATURAL RESOURCES
JOHN R. LLOYD, DIRECTOR

MISCELLANEOUS MAP NO

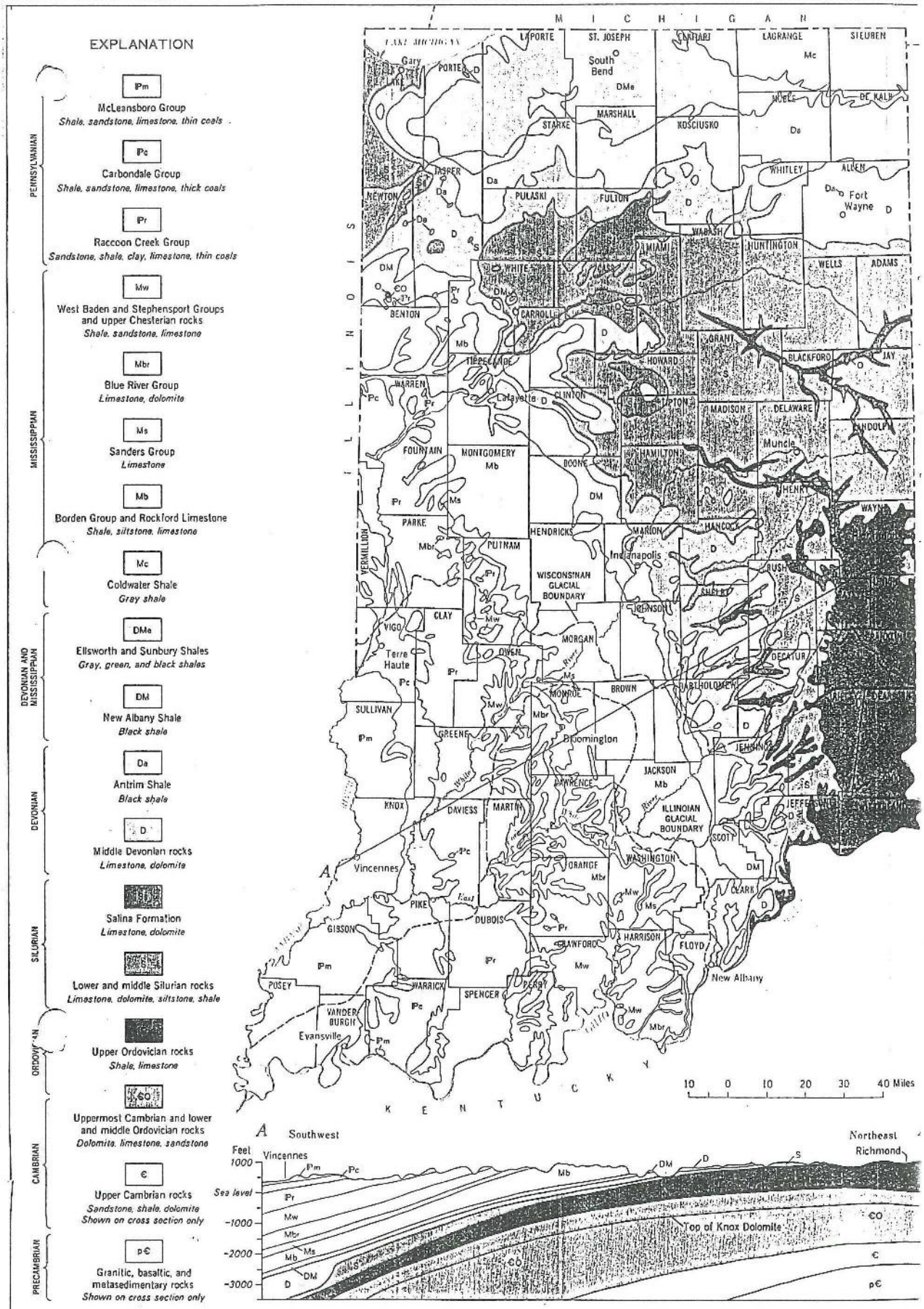

MAP OF INDIANA SHOWING BEDROCK GEOLOGY

Adapted from Regional Geologic Map S
Indiana Geological Survey, published a
preparation. Drafted by Roger L. Purc

TEXAS WORLD OPERATIONS, INC.

Houston, Texas

1970

FIGURE F-8

ORIGINALLY PREPARED BY GOLDEN STRATA SERVICES, INC.

SYSTEM	SERIES	GROUP OR FORMATION	HYDROLOGIC UNITS	LOG	THICKNESS (FT.)	DESCRIPTION	DRILLING AND CASING CONDITIONS	WATER-YIELDING PROPERTIES	CHEMICAL QUALITY OF WATER	WATER TEMPERATURE °F
Quaternary	Pleistocene		Glacial drift aquifers		0-350+	Unconsolidated glacial deposits - pebbly clay (till), silt, and gravel. Alluvial silts and sands along streams.	Boulders, heaving sand locally; sand and gravel wells usually require screens and development; casing required in wells into bedrock.	Sand and gravel, permeable. Some wells yield more than 1000 gpm. Specific capacities from 2.1 to 66 gpm/ft, av. 12 gpm/ft. Coefficient of trans. from 3400 to 100,000 gpd/ft, av. 25,000 gpd/ft.	McHenry County, hardness from 100 to 450 ppm., av. 275. Other counties, see Silurian below and text.	46° min. 52° av. 54° max.
Pennsylvanian		Carbondale Tradewater			0-175	Shale; sandstones, fine-grained; limestones; coal; clay.	Shale requires casing.	Jointed beds yield small supplies locally.		
Mississippian	Kinderhook				0-365	Shale, green and brown, dolomitic; dolomite, silty.		Limited areal extent; not used as aquifer.		
Devonian					0-25	Shale, calcareous; limestone beds, thin.		Not consistent; some wells yield more than 1000 gpm. Crevices and solution channels more abundant near surface. Specific capacities from 0.1 to 550 gpm/ft. Highest av. specific capacities (54.4 gpm/ft) in Du Page Co. wells, lowest (5 gpm/ft) in Lake Co. Coefficient of trans. averages 100,000 gpd/ft in Du Page Co., 9000 gpd/ft in Lake Co.	Variable. Hardness, <100 to >1000 ppm. Iron >0.3 ppm in 80% of analyses.	
Silurian	Niagaran	Port Byron Racine Waukesha Joliet	Silurian (Shallow dolomite aquifer)		0-465	Dolomite, silty at base, locally cherty.	Upper part usually weathered and broken; extent of crevicing varies widely.			54°
	Alexandrian	Kankakee Edgewood						Shales, generally not water yielding, act as barriers between shallow and deep aquifers. Crevices in dolomite yield small amounts of water.		
Ordovician	Cincinnatian	Maquoketa	Maquoketa		0-250	Shale, gray or brown; locally dolomite and/or limestone, argillaceous.	Shale requires casing.			
	Mohawkian	Galena Decorah Platteville	Galena-Platteville		220-350+	Dolomite and/or limestone, cherty. Dolomite, shale partings, speckled. Dolomite and/or limestone, cherty, sandy at base.	Crevicing common only where formations underlie drift. Top of Galena usually selected for hole reduction and seating of casing.	Where formation lies below shales, development and yields of crevices are small; where not capped by shales, dolomites are fairly permeable.	Hardness < 100 ppm. H_2S often present.	54° to 55°
	Chazyan	Glenwood St. Peter	Glenwood-St. Peter		100-650	Sandstone, fine- and coarse-grained; little dolomite; shale at top. Sandstone, fine- to medium-grained; locally cherty red shale at base.	Lower cherty shales cave and are usually cased. Friable sand may slough.	Small to moderate quantities of water. Trans. probably about 15% of that of Cam.-Ord. Aquif.	Water similar in quality or slightly harder than that in Ironton-Galesville Sandstone.	53° to 56° 56° to 58° (Lake Co.)
	Prairie du Chien	Shakopee New Richmond Oneota	Prairie du Chien		0-340	Dolomite, sandy, cherty (oolitic); sandstone. Sandstone, interbedded with dolomite. Dolomite, white to pink, coarse-grained, cherty (oolitic), sandy at base.	Crevices encountered locally in the dolomite, especially in Trempealeau. Casing not required.	Crevices in dolomite and sandstone generally yield small amounts of water. Trempealeau locally well creviced and partly responsible for exceptionally high yields of several deep wells.		
Cambrian	St. Croixian	Trempealeau	Trempealeau		0-225	Dolomite, white, fine-grained, geodic quartz, sandy at base.				
		Franconia	Franconia		45-175	Dolomite, sandstone, and shale, glauconitic, green to red, micaceous.				
		Ironton Galesville	Ironton-Galesville (Cambrian-Ordovician Aquifer)		105-270	Sandstone, fine- to medium-grained, well sorted, upper part dolomitic.	Amount of cementation variable. Lower part more friable. Sometimes sloughs.	Most productive unit of Cam.-Ord. Aquif; trans. probably about 80% its total. Coefficients of trans. and storage of the Cam.-Ord. Aquif. av. 17,400 gpd/ft and 0.00035.	Hardness 200 to 250 ppm in northwest part of area, increasing toward east and south. Iron usually <0.4 ppm.	56° - 58° to 62° - 64°
		Eau Claire	Eau Claire (upper and middle beds)		235-450	Shale and siltstone, dolomitic, glauconitic; sandstone, dolomitic, glauconitic.	Casing not usually necessary. Locally weak shales may require casing.	Shales, generally not water yielding, act as barrier between Ironton-Galesville and Mt. Simon.	Water soft in upper 100'; hardness increases downward (4000 ppm at elev. -2100'); chlorides 400 ppm at elev. -1600', increase at rate of 400 ppm each additional 25' depth.	66° at elev. -1300', increasing 1° with each additional 100' depth. Influenced by water from upper formations.
		Mt. Simon	Sandstones Eau Claire (lower) & Mt. Simon (Mt. Simon)		2000+	Sandstone, coarse-grained, white, red in lower half; lenses of shale and siltstone, red, micaceous.	Casing not required.	Moderate amounts of water; permeability intermediate between that of Glenwood-St. Peter and Ironton-Galesville.		
						Precambrian	Crystalline rocks			

TABLE F-1

Summary of Stratigraphy and Hydrology of Northeastern Illinois (modified from Suter et al., 1959)

SECTION G - GEOLOGICAL DATA ON INJECTION AND CONFINING ZONES (CLASS II)

Does not apply.

H.1 AVERAGE AND MAXIMUM DAILY RATES AND VOLUMES

The maximum daily injection rates from November 1995 to July 1997 for the three Bethlehem injection wells is presented in Table H-1. It should be noted that the data presented in this table is the maximum injection rate that occurred at any time during the entire month indicated. Data on the average injection rate for the wells is not collected.

Bethlehem is requesting that the maximum permitted injection rates for WAL-1 and WAL-2 be maintained at the current monthly average maximum level of 240 gallons per minute. This injection rate maximum is to be measured as a combined monthly average maximum into both WAL wells.

Currently, there is no limitation on flow rate into SPL-1. There is however a maximum injection pressure limitation. Bethlehem is requesting that the injection rates for SPL-1 be maintained as currently permitted, limited by a maximum injection pressure.

The average daily injection volumes from January 1995 to May 1997 for the three Bethlehem injection wells is presented in Table H-2. The maximum daily injection volumes from January 1995 to May 1997 is presented in Table H-3.

Bethlehem is requesting that the average maximum permitted combined monthly injection volume for the WAL wells be based on the average maximum injection rate of 240 gallons per minute, per month.

H.2 AVERAGE AND MAXIMUM INJECTION PRESSURE

The maximum daily injection pressures from January 1995 to May 1997 for the three Bethlehem injection wells is presented in Table H-4. It should be noted that the data presented in this table is the maximum injection pressure that occurred at any time during the entire month indicated. Data on the average injection pressure for the wells is not collected.

Bethlehem is requesting that the maximum permitted injection pressures be continued at the currently allowed levels of 977 psi for WAL-1 and WAL-2, and 699 psi for SPL-1.

H.3 NATURE OF THE ANNULUS FLUID

The annulus fluid in all three Bethlehem wells is composed NaCl brine with corrosion inhibitor added. The seal pots and approximately the upper twenty feet of the annulus in each well is filled with mineral oil to prevent freezing.

H.4 SOURCE AND CHEMICAL ANALYSIS OF INJECTED FLUIDS

Spent pickle liquor (hazardous waste code K062) results from the ultimate weakening of the hydrochloric acid solution utilized to clean scale and rust from steel during the finishing process.

Waste ammonia liquor is a by-product of making coke from coal, for use in steel making. Waste ammonia liquor is considered hazardous due to selenium, benzene and pyridine concentrations (hazardous waste codes D010, D018 and D038, respectively).

Table H-5 presents a summary of the results of numerous historical chemical analyses of the spent pickle liquor and the waste ammonia liquor. The table indicates the number of analyses for each constituent analyzed, and the mean, minimum and maximum values of the test results.

Table H-6 contains the results of an Appendix IX parameter list analysis performed on the spent pickle liquor. Table H-7 contains the results of an Appendix IX parameter list analysis performed on the waste ammonia liquor.

TABLE H-1

Maximum Daily Injection Rate*

	SPL	WAL 1	WAL 2
1/95			
2/95			
3/95			
4/95			
5/95			
6/95			
7/95			
8/95			
9/95			
10/95			
11/95	84	330	340
12/95	108	325	N/A
1/96	150	355	N/A
2/96	104	370	N/A
3/96	90	380	390
4/96	150	295	355
5/96	120	385	355
6/96	120	290	315
7/96	150	N/A	310
8/96	N/A	N/A	380
9/96	65	N/A	325
10/96	146	225	320
11/96	58	325	265
12/96	113	270	225
1/97	60	260	275
2/97	74	205	275
3/97	66	255	280
4/97	64	170	275
5/97	80	185	N/A
6/97	123	225	160
7/97	64	240	155

*All numbers expressed in gallons per minute

Minimum	60	170	155
Maximum	150	385	390
Average	99	283	294

TABLE H-2

Average Daily Volumes Injected***

	SPL	WAL 1	WAL 2
1/95	12,500	273,300	N/A
2/95	25,600	271,900	N/A
3/95	21,000	17,200	311,000
4/95	22,900	233,600	336,400
5/95	19,900	218,200	N/A
6/95	9,100	216,700	N/A
7/95	5,300	212,100	N/A
8/95	400	251,000	N/A
9/95	5,200	230,100	N/A
10/95	10,200	198,500	N/A
11/95	11,300	254,500	150,900
12/95	83,300	218,200	N/A
1/96	15,100	250,700	N/A
2/96	17,800	253,600	N/A
3/96	12,200	270,100	291,100
4/96	11,100	247,000	257,100
5/96	10,300	269,700	241,200
6/96	15,100	251,400	262,200
7/96	13,100	N/A	256,300
8/96	11,000	N/A	241,700
9/96	10,600	N/A	218,500
10/96	5,500	211,400	182,000
11/96	2,500	210,000	166,800
12/96	7,600	203,300	138,400
1/97	8,500	212,400	133,000
2/97	12,200	184,200	215,300
3/97	6,700	211,500	183,700
4/97	12,600	200,500	155,400
5/97	7,300	206,500	N/A
6/97			
7/97			

***All numbers expressed in gallons per day.

Minimum	400	17,200	133,000
Maximum	83,300	273,300	336,400
Average	13,997	222,215	220,059

TABLE H-3

Maximum Daily Volumes Injected***

	SPL	WAL 1	WAL 2
1/95	33,900	338,300	N/A
2/95	58,200	319,600	N/A
3/95	47,700	17,200	427,200
4/95	59,900	298,800	436,700
5/95	55,400	314,200	N/A
6/95	29,600	314,400	N/A
7/95	20,800	319,400	N/A
8/95	7,000	362,300	N/A
9/95	31,900	267,200	N/A
10/95	31,000	270,200	N/A
11/95	46,700	293,600	253,300
12/95	12,300	266,200	N/A
1/96	53,500	347,300	N/A
2/96	57,400	353,000	N/A
3/96	47,500	423,100	351,800
4/96	49,400	319,600	347,400
5/96	37,400	368,400	372,500
6/96	40,800	300,200	340,200
7/96	54,900	N/A	348,200
8/96	36,800	N/A	304,100
9/96	42,700	N/A	291,300
10/96	42,500	261,300	292,000
11/96	33,000	310,300	244,900
12/96	38,600	282,100	238,500
1/97	37,500	291,600	198,200
2/97	47,500	244,600	288,200
3/97	42,000	303,400	302,400
4/97	49,100	254,400	215,900
5/97	50,300	228,100	N/A
6/97			
7/97			

***All numbers expressed in gallons per day.

Minimum	7,000	17,200	198,200
Maximum	59,900	423,100	427,200
Average	41,217	294,954	308,988

TABLE H–4

Maximum Daily Injection Pressure**

	SPL	WAL 1	WAL 2
1/95	35	780	N/A
2/95	22	880	N/A
3/95	29	560	690
4/95	49	740	530
5/95	37	690	N/A
6/95	35	710	N/A
7/95	34	720	N/A
8/95	21	760	N/A
9/95	31	760	N/A
10/95	26	840	N/A
11/95	20	920	510
12/95	15	880	N/A
1/96	32	950	N/A
2/96	31	940	N/A
3/96	43	1,000	560
4/96	49	940	570
5/96	26	890	570
6/96	34	910	510
7/96	45	N/A	560
8/96	38	N/A	600
9/96	11	N/A	580
10/96	56	860	720
11/96	31	880	620
12/96	25	860	540
1/97	31	860	640
2/97	43	860	590
3/97	39	810	630
4/97	36	860	620
5/97	42	800	N/A
6/97			
7/97			

**All numbers expressed in pounds per square inch.

Minimum	11	560	510
Maximum	56	1,000	720
Average	33	833	591

TABLE H-5

BETHLEHEM STEEL CORPORATION
BURNS HARBOR DIVISION

HISTORICAL DATA FOR WASTE PICKLE LIQUOR NOTE: DATA NOT VALIDATED					
Waste Pickle Liquor (a):		Number of Samples	Average		
	Parameter	n	x	min.	max
a	pH*	35	0.97	0.1	1.8
b	Antimony	21	4.83	0.1	10.0
c	Arsenic	14	0.11	0.08	0.25
d	Barium**	14	1.43	0.22	8.0
e	Cadmium	15	22.27	0.05	34.3
f	Chromium**	47	58.03	0.01	133
g	Copper	14	4.94	0.04	23
h	Iron (1992 Data) *	176	122197	80000	164000
i	Lead	21	4.95	0.025	22.5
j	Manganese	10	397.9	338	432
k	Mercury	13	0.03	0.00025	0.141
l	Nickel	47	21.77	6.4	36.9
m	Phosphorus	10	186.7	158	204
n	Selenium**	14	0.08	0.004	0.6
o	Silver	13	0.86	0.06	1.0
p	Tin	10	4.0	4.0	4.0
q	Vanadium	1	7.7	7.7	7.7
r	Zinc	14	13.16	2.11	17.36
s	Sulfide** (All non-detects)#	4	<1.13	≤0.05	<5.0
t	Sulfate*	13	65.4	50	300

HISTORICAL DATA FOR WASTE PICKLE LIQUOR NOTE: DATA NOT VALIDATED						
Waste Pickle Liquor (a):		Number of Samples	Average			
	Parameter	n	x	min.	max	
u	Chlorides*	3	171000	147000	211000	
v	Nitrogen-Ammonia*	2	60	5	115	
w	Fluorides	2	128	1	255	
x	Cyanides* (All non-detects)#	4	<2.56	<0.005	<10.0	
y	Oil and Grease	1	208	208	208	
z	TOC	1	150	150	150	
aa	1,2-Dichlorethane	1	1.1	1.1	1.1	
bb	Cadmium (EP Tox)	1	0.1	0.1	0.1	30.3
cc	Chromium (EP Tox)	1	47	47	47	133
dd	Copper (EP Tox) ?	1	12	12	12	23
ee	Lead (EP Tox)	1	2.12	2.12	2.12	22.5
ff	Nickel (EP Tox) ?	1	14	14	14	36.9
gg	Selenium (EP Tox)	4	0.68	0.05	2.3	0.6
hh	Silver (EP Tox)	1	0.5	0.5	0.5	1.0

a = All concentrations expressed in Parts Per Million. = mg/L
n = Number of samples.
x = Average concentration.
* = Analytes currently required for analysis on a routine basis.
** = Analtyes currently required for analysis on a swing basis.

For non-detects, 1/2 the detection limit was used.

HISTORICAL DATA FOR WASTE AMMONIA LIQUOR NOTE: DATA NOT VALIDATED					
Waste Ammonia Liquor (a):		Number of Samples	Average		
	Parameter	n	x	min.	max
a	pH*	9	9.19	8.4	9.5
b	Arsenic (total)	4	4.58	0.024	18.0
c	Barium (total)**	4	2.45	0.026	8.4
d	Cadmium (total)	4	0.26	0.01	0.96
e	Chromium (total)**	3	0.13	0	1.54
f	Copper (total)	3	1.82	0.1	5.1
g	Lead	3	3.02	0.1	8.7
h	Mercury (total)	3	0.41	0.005	1.2
i	Nickel (total)	3	0.12	0	0.25
j	Selenium (total)**	15	0.98	0	6.76
k	Silver (total)	3	0.49	0	1.4
l	Zinc (total)	3	570	0.02	1710
m	Thiocyanate**	3	483.33	470	500
n	Cyanides (1992 Data)*	263	59.9	37.8	96.4
o	Sulfides**	5	111.6	54	152
p	Benzene*	112	10.18	0.25	27
q	Toluene**	2	1.01	0.224	1.8
r	Xylene**	2	0.36	0.102	0.62
s	Naphthalene*	98	114.80	0.1	2300
t	Oil and Grease	5	78.6	59	120
u	TOC	4	1637.5	1060	1910
v	Acrylonitrile**	1	0.047	0.047	0.047
w	1,2-Dichloroethane**	1	0.0121	0.0121	0.0121
x	Styrene**	2	0.45	0.191	0.7

HISTORICAL DATA FOR WASTE AMMONIA LIQUOR NOTE: DATA NOT VALIDATED					
Waste Ammonia Liquor (a):		Number of Samples	Average		
	Parameter	n	x	min.	max
y	Nitrogen-Ammonia (92)*	263	3504	2582	4286
z	Phenol (4AAP) (92)*	263	869	523	1375
aa	Arsenic (EP Tox)	2	0.16	0.076	0.25
bb	Chromium (EP Tox)**	2	0.04	0.031	0.05
cc	Nickel (EP Tox)	2	0.05	0	0.1
dd	Selenium (EP Tox)**	49	1.7	0	4.4
ee	Zinc (EP Tox)	2	3.83	0.25	7.4
ff	COD	2	8755	7830	9680
gg	2-Methylphenol**	1	17	17	17
hh	4-Methylphenol**	3	54.67	28	72
ii	Aniline**	1	9	9	9
jj	Pyridine**	2	8.2	11	5.4

a = All concentrations expressed in Parts Per Million.
n = Number of samples.
x = Average concentration.
* = Analytes currently required for analysis on a routine basis.
** = Analtyes currently required for analysis on a swing basis.

For non-detects, 1/2 the detection limit was used.

TABLE H-6

APPENDIX IX ANALYSIS OF SPENT PICKLE LIQUOR

American Analytical Inc.

Environmental and Industrial
Analytical Laboratory Services

7870 Broadway
Merrillville, IN 46410
Tel: 219-769-8378
Fax: 219-769-1664

APPENDIX IX
METALS COMPOUNDS
ANALYTICAL RESULTS

Client:	Bethlehem Steel Corporation
Sample Identification:	WPL
Sample Matrix:	Aqueous
Date Sampled:	10/19/93
Date Received:	10/19/93
Date Digested:	10/22/93
Date Analyzed:	10/25 - 10/26/93
Analyst:	MZ
Client Project ID:	N/A
Lab Number:	936782

ANALYTE	CONCENTRATION (mg/L)	METHOD EPA 600/4-79-020	QUANTITATION LIMIT (mg/L)
Arsenic	.238	206.2	.100
dmium	<.100	213.1	.100
..romium	60.1	218.1	.500
Lead	<.500	239.1	.500
Mercury	<.010	245.1	.010
Selenium	<.050	270.2	1.00
Copper	11.4	220.1	.200
Nickel	16.5	249.1	.500
Thallium	<.050	279.2	.050
Zinc	2.11	289.1	.200
Beryllium	<.100	210.1	.100
Antimony	<.500	204.2	.500
Barium	<2.00	208.1	2.00
Vanadium	7.70	6010	.200

Respectfully Submitted,
American Analytical, Inc.

American Analytical Inc.

Environmental and Industrial
Analytical Laboratory Services

7870 Broadway
Merrillville, IN 46410
Tel: 219-769-8378
Fax: 219-769-1664

WET CHEMISTRY
ANALYTICAL RESULTS

Client:	Bethlehem Steel Corporation
Sample Identification:	WPL
Sample Matrix:	Aqueous
Date Sampled:	10/19/93
Date Received:	10/19/93
Date Analyzed:	10/26/93
Analyst:	SA/CB
Client Project ID:	N/A
Lab Number:	936782

ANALYTE	CONCENTRATION (mg/L)	METHOD EPA 600/4-79-020	QUANTITATION LIMIT (mg/L)
Cyanide	<.010	335.2	.010
Sulfide	<.050	376.2	.050

Respectfully Submitted,
American Analytical, Inc.

American Analytical Inc.

Environmental and Industrial
Analytical Laboratory Services

7870 Broadway
Merrillville, IN 46410
Tel: 219-769-8378
Fax: 219-769-1664

PRIORITY POLLUTANTS
PCBS
ANALYTICAL RESULTS

Client:	Bethlehem Steel Corporation
Sample Identification:	WPL
Sample Matrix:	Aqueous
Date Sampled:	10/19/93
Date Received:	10/19/93
Date Extracted:	10/25/93
Date Analyzed:	10/25/93
Analyst:	TC
Client Project ID:	N/A
Lab Number:	936782

ANALYTE	CAS NUMBER	CONCENTRATION (ug/L)	QUANTITATION LIMIT (ug/L)
PCB-1016	12974-11-2	ND	10
CB-1221	11104-28-2	ND	10
PCB-1232	11141-16-5	ND	10
PCB-1242	53469-21-9	ND	10
PCB-1248	12672-29-6	ND	10
PCB-1254	11097-69-1	ND	10
PCB-1260	11096-82-5	ND	10

J - Analyte detected at levels below Quantitation Limit
ND - Not Detected at Quantitation Limit
Analyte Method: SW-846 8080 / EPA 608

Respectfully Submitted,
American Analytical, Inc.

American Analytical Inc.

Environmental and Industrial
Analytical Laboratory Services

7870 Broadway
Merrillville, IN 46410
Tel: 219-769-8378
Fax: 219-769-1664

APPENDIX IX
VOLATILE COMPOUNDS
ANALYTICAL RESULTS

Client:	Bethlehem Steel Corporation
Sample Identification:	WPL
Sample Matrix:	Aqueous
Date Sampled:	10/19/93
Date Received:	10/19/93
Date Analyzed:	10/26/93
Analyst:	TC
Project Number:	N/A
Lab Number:	936782

ANALYTE	CAS NUMBER	CONCENTRATION (ug/L)	QUANTITATION LIMIT (ug/L)
Acetone	67-64-1	ND	120
Acrolein	107-02-8	ND	120
Acrylonitrile	107-13-1	ND	120
Benzene	71-43-2	ND	62
Bromodichloromethane	75-27-4	ND	62
Bromoform	75-25-2	ND	62
Bromomethane	74-83-9	ND	120
2-Butanone	78-93-3	ND	120
Carbon disulfide	75-15-0	ND	62
Carbon tetrachloride	56-23-5	ND	62
Chlorobenzene	108-90-7	ND	62
Chloroethane	75-00-3	ND	120
Chloroform	67-66-3	ND	62
Chloromethane	74-87-3	ND	120
Dibromochloromethane	124-48-1	ND	62
1,1-Dichlorethane	75-34-3	ND	62
1,2-Dichlorethane	107-06-2	1,100	62
1,1-Dichloroethene	75-35-4	ND	62
Trans/Cis-1,2-Dichloroethene	540-59-0	ND	62
1,2-Dichloropropane	78-87-5	ND	62
cis-1,3-Dichloropropene	10061-1-5	ND	62
trans-1,3-Dichloropropene	10061-02-5	ND	62
Ethyl benzene	100-41-4	ND	62
2-Hexanone	591-78-6	ND	120
Methylene chloride	75-09-2	ND	62
4-Methyl-2-Pentanone	108-10-1	ND	120
Styrene	100-42-5	ND	62
1,1,2,2-Tetrachloroethane	79-34-5	ND	62
Tetrachloroethene	127-18-4	ND	62
Toluene	108-88-3	ND	62
1,1,1-Trichloroethane	71-55-6	ND	62

APPENDIX IX
VOLATILE COMPOUNDS
ANALYTICAL RESULTS

Lab Number: 936782

ANALYTE	CAS NUMBER	CONCENTRATION (ug/L)	QUANTITATION LIMIT (ug/L)
1,1,2-Trichloroethane	79-00-5	ND	62
Trichloroethene	79-01-6	ND	62
Vinyl acetate	108-05-4	ND	120
Vinyl chloride	75-01-4	ND	120
Xylenes (Total)	1330-20-7	ND	62
Acetonitrile	2206-26-0	ND	1,200
1,2-Dibromo-3-chloropropane	96-2-8	ND	120
1,2-Dibromoethane	106-93-4	ND	120
Dibromethane	74-95-3	ND	120
Dichlorodifluoromethane	75-71-8	ND	120
Ethylmethacrylate	97-63-2	ND	600
Iodomethane	74-88-4	ND	1,200
Isobutylalcohol	78-83-1	ND	1,200
Methacrylonitrile	126-98-7	ND	600
Methylmethacrylate	80-62-6	ND	600
,1,2-Tetrachloroethane	630-20-6	ND	120
.richloromonoflyoromethane	75-69-4	ND	120
1,2,3-Trichloropropane	96-18-4	ND	120

ND - Not Detected at Quantitation Limit
J - Analyte detected at levels below Quantitation Limit
Analyte Method: U.S. EPA 624/SW-846, 8260

Respectfully Submitted,
American Analytical, Inc.

American Analytical Inc.

Environmental and Industrial
Analytical Laboratory Services

7870 Broadway
Merrillville, IN 46410
Tel: 219-769-8378
Fax: 219-769-1664

APPENDIX IX
SEMI-VOLATILE ORGANIC COMPOUNDS
ANALYTICAL RESULTS

Client:	Bethlehem Steel Corporation
Sample Identification:	WPL
Sample Matrix:	Aqueous
Date Sampled:	10/19/93
Date Received:	10/19/93
Date Extracted:	10/25/93
Date Analyzed:	10/25/93
Analyst:	DWJ
Project Identification:	N/A
Lab Number:	936782

ANALYTE	CAS NUMBER	CONCENTRATION (mg/L)	QUANTITATION LIMIT (mg/L)
Phenol	108-95-2	ND	0.10
Bis (2-Chloroethyl) Ether	111-44-4	ND	0.10
2-Chlorophenol	95-57-8	ND	0.10
1,3-Dichlorobenzene	541-73-1	ND	0.10
4-Dichlorobenzene	106-46-7	ND	0.10
enzyl Acohol	100-51-6	ND	0.20
1,2-Dichlorobenzene	95-50-1	ND	0.10
2-Methylphenol	95-48-7	ND	0.10
Bis (2-Chloroisopropyl) Ether	108-60-1	ND	0.10
4-Methylphenol	106-44-5	ND	0.10
N-Nitrosodipropylamic	621-64-7	ND	0.10
Hexachloroethane	67-72-1	ND	0.10
Nitrobenzene	98-95-3	ND	0.10
Isophorone	78-59-1	ND	0.10
2-Nitrophenol	88-75-5	ND	0.10
2,4-Dimethylphenol	105-67-9	ND	0.10
Benzoic Acid	65-85-0	ND	0.50
Bis (2-Chloroethoxy) Methane	111-91-1	ND	0.10
2,4-Dichlorophenol	120-83-2	ND	0.10
1,2,4-Trichlorobenzene	120-82-1	ND	0.10
Naphthalene	91-20-3	ND	0.10
4-Chloroaniline	106-47-8	ND	0.20
Hexachlorobutadiene	87-68-3	ND	0.10
4-Chloro-3-Methylphenol (para-chloro-meta-cresol)	59-50-7	ND	0.20
2-Methylnaphthalene	91-57-6	ND	0.10
Hexachlorocyclo-Pentadiene	77-47-4	ND	0.10
2,4,6-Trichlorophenol	88-06-2	ND	0.10
2,4,5-Trichlorophenol	95-95-4	ND	0.50
2-Chloronaphthalene	91-58-7	ND	0.10

APPENDIX IX
SEMI-VOLATILE ORGANIC COMPOUNDS
ANALYTICAL RESULTS

Lab Number: 936782

ANALYTE	CAS NUMBER	CONCENTRATION (mg/L)	QUANTITATION LIMIT (mg/L)
2-Nitroaniline	88-74-4	ND	0.50
Dimethylphthalate	131-11-3	ND	0.10
Acenaphthylene	208-96-8	ND	0.10
2,6-Dinitrotoluene	606-20-2	ND	0.10
3-Nitroaniline	99-09-2	ND	0.50
Acenaphthene	83-32-9	ND	0.10
2,4-Dinitrophenol	51-28-5	ND	0.50
4-Nitrophenol	100-02-7	ND	0.50
Dibenzofuran	132-64-9	ND	0.10
2,4-Dinitrotoluene	121-14-2	ND	0.10
4-Chlorophenyy-phenyl ether	7005-72-3	ND	0.10
Fluorene	86-73-7	ND	0.10
4-Nitroaniline	100-01-6	ND	0.50
4,6-Dinitro-2-Methylphenol	534-52-1	ND	0.50
N-nitrosodiphenylamine	86-30-6	ND	0.10
3romophenyl-phenlether	101-55-3	ND	0.10
Hexachlorobenzene	118-74-1	ND	0.10
Pentachlorophenol	87-86-5	ND	0.50
Phenanthrene	85-01-8	ND	0.10
Anthracene	120-12-7	ND	0.10
Di-n-butylphthalate	84-74-2	ND	0.10
Fluoranthene	206-44-0	ND	0.10
Pyrene	129-00-0	ND	0.10
Butylbenzylphthalate	85-68-7	ND	0.10
3,3'Dichlorobenzidine	91-94-1	ND	0.50
Benzo(a)anthracene	56-55-3	ND	0.10
Chrysene	218-01-9	ND	0.10
Bis (2-ethylhexyl) phthalate	117-81-7	ND	0.10
Di-n-octylphthalate	117-84-0	ND	0.10
Benzo(b)fluoranthene	205-99-2	ND	0.10
2,4,5,6-Tetrachlorophenol	58-90-2	ND	0.50
Benzidine	92-87-5	ND	0.50
1,2-Diphenylhydrazine	122-66-7		0.10
n-Nitrosodimethylamine	67-75-9	ND	0.10
Toluenediamine	95-80-7	ND	0.50
Benzo(k)fluoranthene	207-08-9	ND	0.10
Benzo(A)pyrene	50-32-8	ND	0.10
Indeno(1,2,3-cd) pyrene	193-39-5	ND	0.10
Dibenzo(a,h)anthracene	53-70-3	ND	0.10
Benzo(g,h,i)perylene	191-24-2	ND	0.10
Diethylphthalate	84-66-2	ND	0.10
Pyridine	75-01-4	ND	0.10

APPENDIX IX
SEMI-VOLATILE ORGANIC COMPOUNDS
ANALYTICAL RESULTS

Lab Number: 936782

ANALYTE	CAS NUMBER	CONCENTRATION (mg/L)	QUANTITATION LIMIT (mg/L)
Acetophenone	28077-64-7	ND	0.50
2-Acetylaminofluorene	53-96-3	ND	0.50
4-Aminobiphenyl	92-67-1	ND	0.10
Aniline	62-53-3	ND	0.10
Aramite	140-57-8	ND	0.50
2-Sec-butyl-4,6-dinitrophenol	88-85-7	ND	0.50
Chlorobenzilate	510-15-6	ND	0.50
3-Methylphenol	108-39-4	ND	0.10
2-Chloro-1,3-butadiene	126-99-8	ND	0.10
Diallate	2303-16-4	ND	0.50
2,6-Dichlorophenol	87-65-0	ND	0.50
Dimethoate	60-51-5	ND	0.50
p-Dimethylaminoazobenzene	60-11-7	ND	0.50
7,12-Dimethylbenz(a)anthracene	57-97-6	ND	0.10
3,3'-Dimethylbenzidine	612-82-8	ND	0.50
'pha, alpha-dimethylphenethylamine		ND	0.50
..-Dinitrobenzene	99-65-0	ND	0.50
Diphenylamine	122-39-4	ND	0.50
Disulfoton	298-04-4	ND	1.0
Ethylmethanesulfonate	62-50-0	ND	0.50
Famphur	52-85-7	ND	1.0
Hexachlorophene	70-30-4	ND	0.50
Hexachloropropene	1888-71-7	ND	0.50
Isodrin	465-73-6	ND	0.50
Isosafrole	120-58-1	ND	0.50
Methapyrilene	91-80-5	ND	0.50
3-Methylchloranthrene	56-79-5	ND	0.50
Methylmethanesulfonate	66-27-3	ND	0.50
Methylparathion	298-00-0	ND	0.50
1,4-Naphthoquinone	130-15-4	ND	0.10
1-Naphthylamine	134-32-7	ND	0.10
2-Naphthylamine	91-59-8	ND	0.10
4-Nitroquinoline 1-oxide	56-57-5	ND	0.50
N-nitrosodi-n-butylamine		ND	0.10
N-nitrosodiethylamine		ND	0.10
N-nitrosomehylethylamine		ND	0.10
N-nitrosomorpholine		ND	0.50
N-nitrosopiperidine		ND	0.10
N-nitrosopyrrolidine	930-55-2	ND	0.50
5-Nitro-o-toluidine		ND	0.50
⁻entachlorobenzene	608-93-5	ND	0.10

APPENDIX IX
SEMI-VOLATILE ORGANIC COMPOUNDS
ANALYTICAL RESULTS

Lab Number: 936782

ANALYTE	CAS NUMBER	CONCENTRATION (mg/L)	QUANTITATION LIMIT (mg/L)
Pentachloroethane	76-01-7	ND	0.10
Pentachloronitrobenzene	82-68-8	ND	0.10
Phenacetin	62-44-2	ND	0.50
P-phenylenediamine	95-54-5	ND	0.10
Phorate	298-02-2	ND	0.50
Z-Picoline	109-06-8	ND	0.10
Pronamide	23950-58-5	ND	0.50
Safrole	94-59-7	ND	0.10
1,2,4,5-Tetrachlorobenzene	634-66-2	ND	0.10
2,3,4,6-Tetrachlorophenol	58-90-2	ND	0.50
O-Toluidene	95-53-4	ND	0.50
0,0,0-Triethyl phosphorothioate	126-68-1	ND	1.0
Pyridine	75-01-4	ND	0.10

ND - Not detected at quantitation limit
J - Analyte detected at levels below Quantitation Limit
Analyte Method: U.S. EPA 625

Respectfully Submitted,
American Analytical, Inc.

TABLE H-7

APPENDIX IX ANALYSIS OF WASTE AMMONIA LIQUOR

American Analytical Inc.

Environmental and Industrial
Analytical Laboratory Services

7870 Broadway
Merrillville, IN 46410
Tel: 219-769-8378
Fax: 219-769-1664

APPENDIX IX
METALS COMPOUNDS
ANALYTICAL RESULTS

Client:	Bethlehem Steel Corporation
Sample Identification:	WAL
Sample Matrix:	Aqueous
Date Sampled:	10/19/93
Date Received:	10/19/93
Date Digested:	10/22/93
Date Analyzed:	10/25 - 10/26/93
Analyst:	MZ
Client Project ID:	N/A
Lab Number:	936781

ANALYTE	CONCENTRATION (mg/L)	METHOD EPA 600/4-79-020	QUANTITATION LIMIT (mg/L)
Arsenic	<.100	206.2	.100
Cadmium	<.100	213.1	.100
Chromium	<.500	218.1	.500
Lead	<.500	239.1	.500
Mercury	<.010	245.1	.010
Selenium	6.76	270.2	1.00
Copper	<.200	220.1	.200
Nickel	<.500	249.1	.500
Thallium	<.050	279.2	.050
Zinc	.420	289.1	.200
Beryllium	<.100	210.1	.100
Antimony	<.500	204.2	.500
Barium	<2.00	208.1	2.00
Vanadium	<.200	6010	.200

Respectfully Submitted,
American Analytical, Inc.

American Analytical Inc.

Environmental and Industrial
Analytical Laboratory Services

7870 Broadway
Merrillville, IN 46410
Tel: 219-769-8378
Fax: 219-769-1664

WET CHEMISTRY
ANALYTICAL RESULTS

Client:	Bethlehem Steel Corporation
Sample Identification:	WAL
Sample Matrix:	Aqueous
Date Sampled:	10/19/93
Date Received:	10/19/93
Date Analyzed:	10/26/93
Analyst:	SA/CB
Client Project ID:	N/A
Lab Number:	936781

ANALYTE	CONCENTRATION (mg/L)	METHOD EPA 600/4-79-020	QUANTITATION LIMIT (mg/L)
Cyanide	<.010	335.2	.010
Sulfide	72.0	376.2	.050

Respectfully Submitted,
American Analytical, Inc.

American Analytical Inc.

Environmental and Industrial
Analytical Laboratory Services

7870 Broadway
Merrillville, IN 46410
Tel: 219-769-8378
Fax: 219-769-1664

PRIORITY POLLUTANTS
PCBS
ANALYTICAL RESULTS

Client: Bethlehem Steel Corporation

Sample Identification: WAL
Sample Matrix: Aqueous
Date Sampled: 10/19/93
Date Received: 10/19/93
Date Extracted: 10/25/93
Date Analyzed: 10/25/93
Analyst: TC
Client Project ID: N/A
Lab Number: 936781

ANALYTE	CAS NUMBER	CONCENTRATION (ug/L)	QUANTITATION LIMIT (ug/L)
PCB-1016	12974-11-2	ND	10
. CB-1221	11104-28-2	ND	10
PCB-1232	11141-16-5	ND	10
PCB-1242	53469-21-9	ND	10
PCB-1248	12672-29-6	ND	10
PCB-1254	11097-69-1	ND	10
PCB-1260	11096-82-5	ND	10

J - Analyte detected at levels below Quantitation Limit
ND - Not Detected at Quantitation Limit
Analyte Method: SW-846 8080 / EPA 608

Respectfully Submitted,
American Analytical, Inc.

American Analytical Inc.

Environmental and Industrial
Analytical Laboratory Services

7870 Broadway
Merrillville, IN 46410
Tel: 219-769-8378
Fax: 219-769-1664

APPENDIX IX
VOLATILE COMPOUNDS
ANALYTICAL RESULTS

Client:	Bethlehem Steel Corporation
Sample Identification:	WAL
Sample Matrix:	Aqueous
Date Sampled:	10/19/93
Date Received:	10/19/93
Date Analyzed:	10/26/93
Analyst:	TC
Project Number:	N/A
Lab Number:	936781

ANALYTE	CAS NUMBER	CONCENTRATION (ug/L)	QUANTITATION LIMIT (ug/L)
Acetone	67-64-1	ND	500
Acrolein	107-02-8	ND	500
Acrylonitrile	107-13-1	ND	500
nzene	71-43-2	7,200	250
omodichloromethane	75-27-4	ND	250
Bromoform	75-25-2	ND	250
Bromomethane	74-83-9	ND	500
2-Butanone	78-93-3	ND	500
Carbon disulfide	75-15-0	ND	250
Carbon tetrachloride	56-23-5	ND	250
Chlorobenzene	108-90-7	ND	250
Chloroethane	75-00-3	ND	500
Chloroform	67-66-3	ND	250
Chloromethane	74-87-3	ND	500
Dibromochloromethane	124-48-1	ND	250
1,1-Dichlorethane	75-34-3	ND	250
1,2-Dichlorethane	107-06-2	ND	250
1,1-Dichloroethene	75-35-4	ND	250
Trans/Cis-1,2-Dichloroethene	540-59-0	ND	250
1,2-Dichloropropane	78-87-5	ND	250
cis-1,3-Dichloropropene	10061-1-5	ND	250
trans-1,3-Dichloropropene	10061-02-5	ND	250
Ethyl benzene	100-41-4	ND	250
2-Hexanone	591-78-6	ND	500
Methylene chloride	75-09-2	ND	250
4-Methyl-2-Pentanone	108-10-1	ND	500
Styrene	100-42-5	700	250
1,1,2,2-Tetrachloroethane	79-34-5	ND	250
rachloroethene	127-18-4	ND	250
uene	108-88-3	1,800	250
1,1,1-Trichloroethane	71-55-6	ND	250

APPENDIX IX
VOLATILE COMPOUNDS
ANALYTICAL RESULTS

Lab Number: 936781

ANALYTE	CAS NUMBER	CONCENTRATION (ug/L)	QUANTITATION LIMIT (ug/L)
1,1,2-Trichloroethane	79-00-5	ND	250
Trichloroethene	79-01-6	ND	250
Vinyl acetate	108-05-4	ND	500
Vinyl chloride	75-01-4	ND	500
Xylenes (Total)	1330-20-7	620	250
Acetonitrile	2206-26-0	ND	5,000
1,2-Dibromo-3-chloropropane	96-2-8	ND	500
1,2-Dibromoethane	106-93-4	ND	500
Dibromethane	74-95-3	ND	500
Dichlorodifluoromethane	75-71-8	ND	500
Ethylmethacrylate	97-63-2	ND	2,500
Iodomethane	74-88-4	ND	5,000
Isobutylalcohol	78-83-1	ND	5,000
Methacrylonitrile	126-98-7	ND	2,500
Methylmethacrylate	80-62-6	ND	2,500
,1,2-Tetrachloroethane	630-20-6	ND	500
richloromonoflyoromethane	75-69-4	ND	500
1,2,3-Trichloropropane	96-18-4	ND	500

ND - Not Detected at Quantitation Limit
J - Analyte detected at levels below Quantitation Limit
Analyte Method: U.S. EPA 624/SW-846, 8260

Respectfully Submitted,
American Analytical, Inc.

American Analytical Inc.

Environmental and Industrial
Analytical Laboratory Services

7870 Broadway
Merrillville, IN 46410
Tel: 219-769-8378
Fax: 219-769-1664

APPENDIX IX
SEMI-VOLATILE ORGANIC COMPOUNDS
ANALYTICAL RESULTS

Client:	Bethlehem Steel Corporation
Sample Identification:	WAL
Sample Matrix:	Aqueous
Date Sampled:	10/19/93
Date Received:	10/19/93
Date Extracted:	10/25/93
Date Analyzed:	10/26/93
Analyst:	DWJ
Project Identification:	N/A
Lab Number:	936781

ANALYTE	CAS NUMBER	CONCENTRATION (mg/L)	QUANTITATION LIMIT (mg/L)
Phenol	108-95-2	150	10
Bis (2-Chloroethyl) Ether	111-44-4	ND	10
2-Chlorophenol	95-57-8	ND	10
1,3-Dichlorobenzene	541-73-1	ND	10
1-Dichlorobenzene	106-46-7	ND	10
Benzyl Acohol	100-51-6	ND	20
1,2-Dichlorobenzene	95-50-1	ND	10
2-Methylphenol	95-48-7	17	10
Bis (2-Chloroisopropyl) Ether	108-60-1	ND	10
4-Methylphenol	106-44-5	64	10
N-Nitrosodipropylamie	621-64-7	ND	10
Hexachloroethane	67-72-1	ND	10
Nitrobenzene	98-95-3	ND	10
Isophorone	78-59-1	ND	10
2-Nitrophenol	88-75-5	ND	10
2,4-Dimethylphenol	105-67-9	ND	10
Benzoic Acid	65-85-0	ND	50
Bis (2-Chloroethoxy) Methane	111-91-1	ND	10
2,4-Dichlorophenol	120-83-2	ND	10
1,2,4-Trichlorobenzene	120-82-1	ND	10
Naphthalene	91-20-3	11	10
4-Chloroaniline	106-47-8	ND	20
Hexachlorobutadiene	87-68-3	ND	10
4-Chloro-3-Methylphenol (para-chloro-meta-cresol)	59-50-7	ND	20
2-Methylnaphthalene	91-57-6	ND	10
Hexachlorocyclo-Pentadiene	77-47-4	ND	10
2,4,6-Trichlorophenol	88-06-2	ND	10
2,4,5-Trichlorophenol	95-95-4	ND	50
Chloronaphthalene	91-58-7	ND	10

APPENDIX IX
SEMI-VOLATILE ORGANIC COMPOUNDS
ANALYTICAL RESULTS

Lab Number: 936781

ANALYTE	CAS NUMBER	CONCENTRATION (mg/L)	QUANTITATION LIMIT (mg/L)
2-Nitroaniline	88-74-4	ND	50
Dimethylphthalate	131-11-3	ND	10
Acenaphthylene	208-96-8	ND	10
2,6-Dinitrotoluene	606-20-2	ND	10
3-Nitroaniline	99-09-2	ND	50
Acenaphthene	83-32-9	ND	10
2,4-Dinitrophenol	51-28-5	ND	50
4-Nitrophenol	100-02-7	ND	50
Dibenzofuran	132-64-9	ND	10
2,4-Dinitrotoluene	121-14-2	ND	10
4-Chlorophenyy-phenyl ether	7005-72-3	ND	10
Fluorene	86-73-7	ND	10
4-Nitroaniline	100-01-6	ND	50
4,6-Dinitro-2-Methylphenol	534-52-1	ND	50
N-nitrosodiphenylamine	86-30-6	ND	10
Bromophenyl-phenlether	101-55-3	ND	10
Hexachlorobenzene	118-74-1	ND	10
Pentachlorophenol	87-86-5	ND	50
Phenanthrene	85-01-8	ND	10
Anthracene	120-12-7	ND	10
Di-n-butylphthalate	84-74-2	ND	10
Fluoranthene	206-44-0	ND	10
Pyrene	129-00-0	ND	10
Butylbenzylphthalate	85-68-7	ND	10
3,3'Dichlorobenzidine	91-94-1	ND	50
Benzo(a)anthracene	56-55-3	ND	10
Chrysene	218-01-9	ND	10
Bis (2-ethylhexyl) phthalate	117-81-7	ND	10
Di-n-octylphthalate	117-84-0	ND	10
Benzo(b)fluoranthene	205-99-2	ND	10
2,4,5,6-Tetrachlorophenol	58-90-2	ND	50
Benzidine	92-87-5	ND	50
1,2-Diphenylhydrazine	122-66-7		10
n-Nitrosodimethylamine	67-75-9	ND	10
Toluenediamine	95-80-7	ND	50
Benzo(k)fluoranthene	207-08-9	ND	10
Benzo(A)pyrene	50-32-8	ND	10
Indeno(1,2,3-cd) pyrene	193-39-5	ND	10
Dibenzo(a,h)anthracene	53-70-3	ND	10
Benzo(g,h,i)perylene	191-24-2	ND	10
Diethylphthalate	84-66-2	ND	10
Pyridine	75-01-4	ND	10

APPENDIX IX
SEMI-VOLATILE ORGANIC COMPOUNDS
ANALYTICAL RESULTS

Lab Number: 936781

ANALYTE	CAS NUMBER	CONCENTRATION (mg/L)	QUANTITATION LIMIT (mg/L)
Acetophenone	28077-64-7	ND	50
2-Acetylaminofluorene	53-96-3	ND	50
4-Aminobiphenyl	92-67-1	ND	10
Aniline	62-53-3	9 J	10
Aramite	140-57-8	ND	50
2-Sec-butyl-4,6-dinitrophenol	88-85-7	ND	50
Chlorobenzilate	510-15-6	ND	50
3-Methylphenol	108-39-4	ND	10
2-Chloro-1,3-butadiene	126-99-8	ND	10
Diallate	2303-16-4	ND	50
2,6-Dichlorophenol	87-65-0	ND	50
Dimethoate	60-51-5	ND	50
p-Dimethylaminoazobenzene	60-11-7	ND	50
7,12-Dimethylbenz(a)anthracene	57-97-6	ND	10
3,3'-Dimethylbenzidine	612-82-8	ND	50
pha, alpha-dimethylphenethylamine		ND	50
...-Dinitrobenzene	99-65-0	ND	50
Diphenylamine	122-39-4	ND	50
Disulfoton	298-04-4	ND	100
Ethylmethanesulfonate	62-50-0	ND	50
Famphur	52-85-7	ND	100
Hexachlorophene	70-30-4	ND	50
Hexachloropropene	1888-71-7	ND	50
Isodrin	465-73-6	ND	50
Isosafrole	120-58-1	ND	50
Methapyrilene	91-80-5	ND	50
3-Methylchloranthrene	56-79-5	ND	50
Methylmethanesulfonate	66-27-3	ND	50
Methylparathion	298-00-0	ND	50
1,4-Naphthoquinone	130-15-4	ND	10
1-Naphthylamine	134-32-7	ND	10
2-Naphthylamine	91-59-8	ND	10
4-Nitroquinoline 1-oxide	56-57-5	ND	50
N-nitrosodi-n-butylamine		ND	10
N-nitrosodiethylamine		ND	10
N-nitrosomehylethylamine		ND	10
N-nitrosomorpholine		ND	50
N-nitrosopiperidine		ND	10
N-nitrosopyrrolidine	930-55-2	ND	50
5-Nitro-o-toluidine		ND	50
ntachlorobenzene	608-93-5	ND	10

APPENDIX IX
SEMI-VOLATILE ORGANIC COMPOUNDS
ANALYTICAL RESULTS

Lab Number: 936781

ANALYTE	CAS NUMBER	CONCENTRATION (mg/L)	QUANTITATION LIMIT (mg/L)
Pentachloroethane	76-01-7	ND	10
Pentachloronitrobenzene	82-68-8	ND	10
Phenacetin	62-44-2	ND	50
P-phenylenediamine	95-54-5	ND	10
Phorate	298-02-2	ND	50
Z-Picoline	109-06-8	ND	10
Pronamide	23950-58-5	ND	50
Safrole	94-59-7	ND	10
1,2,4,5-Tetrachlorobenzene	634-66-2	ND	10
2,3,4,6-Tetrachlorophenol	58-90-2	ND	50
O-Toluidene	95-53-4	ND	50
0,0,0-Triethyl phosphorothioate	126-68-1	ND	100
Pyridine	75-01-4	11	10

ND - Not detected at quantitation limit
J - Analyte detected at levels below Quantitation Limit
Analyte Method: U.S. EPA 625

Respectfully Submitted,
American Analytical, Inc.

SECTION I - FORMATION TESTING PROGRAM

Based on historical operating data, in-situ measurements of the Mt. Simon formation at near-by Class I injection wells and current permitting, Bethlehem Steel requests that the current maximum injection pressure limitation of 977 psi for the WAL wells and 699 psi for the SPL well remain unchanged in the new permits.

The WAL wells have operated in the current downhole configuration since 1990 without incident. Review of the historical operating data and routine formation pressure tests conducted from 1990 to present do not show any fracturing to be occurring with the current maximum injection pressure limitation.

In addition Bethlehem installed a deep monitoring well adjacent to WAL-2 which continuously measures formation pressure within the confining layers. The well has shown no unexpected pressure response while injection is occurring.

Fracture gradient testing of the Midco Well (approximately 12 miles from the WAL wells) in 1993, and the subsequent USEPA permitted maximum surface injection pressure, provides useful data that is supportive of Bethlehem's request, and is conservative. It is our understanding that the maximum surface injection pressure limit calculated and permitted for the Midco well is based on a fracture gradient of .85 psi/ft. Data concerning the Midco testing is located in Appendix B of this document. The current Bethlehem injection pressure limitation was originally calculated using a .80 psi/ft gradient. Based on the fracture gradient numbers generated by actual in-situ testing, Bethlehem should be able to request a higher maximum injection pressure limit.

The operational records of the wells, in-situ testing, and data gathered by the monitor well support the current maximum injection pressures of 977 psi and 699 psi for the WAL wells and the SPL well, respectively. Therefore, Bethlehem requests that this parameter remain unchange in the new permits.

SECTION J - STIMULATION PROGRAM

Stimulation is not planned for Bethlehem's existing wells at this time.

K.1 SPENT PICKLE LIQUOR (SPL)

Hydrochloric acid pickling is the process of chemically removing oxides and scale from the surface of a metal by the action of aqueous solutions of inorganic acids. While pickling is only one of several methods of removing undesirable surface oxides, this process is most widely used in the manufacture of sheet products due to comparatively low operating costs and ease of operation.

Bethlehem's Burns Harbor Division utilizes hydrochloric acid in their pickling process. The reaction occurring when sheet steel is immersed in hydrochloric acid solution yields a fairly concentrated solution of ferrous chloride and a low concentration of the acid. The oxide films (Fe0, Fe_20_3 & Fe_30_4) are all readily dissolved by hydrochloric acid.

The liquid discharged from the hydrochloric acid pickling process is a SPL which has a high ferrous chloride content. This waste is listed by the USEPA as hazardous waste K062. At present, Bethlehem Steel sells a portion of the spent acid, and beneficially utilizes some at the Division's centralized secondary waste water treatment plant (SWTP) for pH adjustment of influent waste waters. The remainder is disposed of via the deep well injection facility as shown in process diagram Figure K-1.

K.2 DESCRIPTION OF THE PROCESS

Four acid tanks, Nos. 1 through 4 are filled with a solution with 0.8 to 5% by weight hydrochloric acid solution. The hydrochloric acid is heated in the tanks by direct steam injection. Tank no. 3, which contains the highest concentration of acid, overflows to tanks Nos. 2 and 1. The steel sheet enters tank No. 1 and moves countercurrent to the hydrochloric acid through tank Nos. 1 through 4.

During the pickling process, the hydrochloric acid becomes spent and is then classified as SPL. The SPL from tank No. 1 flows by gravity to the SPL storage tank. The SPL is then either used as a substitute for a commercial product, or filtered and disposed by the waste acid disposal well No. 1.

K.3 SURFACE FACILITIES

The SPL injection well disposal system consists of (1) a surface facility for temporary storage of SPL and treatment of suspended solids and (2) the waste disposal well for conveying the SPL to the disposal zone.

The existing surface facilities consist of the following components as illustrated in Figure K-2.

The first operating unit is a 35,000 gallon SPL storage tank. It is constructed of carbon steel and lined with brick and rubber. The SPL is transferred to a diatomaceous earth (DE) precoat leaf filter system through a filter pumping station. The waste filter media is then discharged to the plant's process wastewater sewer system for treatment in the SWTP. Filtered waste pickle liquor is then pumped to the disposal well and injected.

K.4 WASTE AMMONIA LIQUOR

The waste waters generated in the coke plant consist of waste ammonia liquor (WAL) which contains varying quantities of organic compounds.

A general schematic of the processes employed for by-product coke making at the BSC Facility is shown in Figure K-3 and diagram of the surface facilities is shown in Figure K-4. The WAL is clarified then cooled in the non-contact heat exchangers. It is then passed through pressure filters into a 60,000 gallon storage tank. The WAL is then filtered through polishing filters, and injected into the disposal zone.

K.5 SURFACE FACILITIES

The WAL injection well disposal system consists of (1) a surface facility including receiving, cooling and treatment (suspended solids and free oil) equipment and (2) the waste disposal wells for conveying the waste to the Mt. Simon disposal zone. Surface facilities consist of the components illustrated in Figure K-3.

Clarifier and Surge Tank - The WAL is conveyed from one of the three coke oven tar decanters and crude liquor storage tanks to the 570,000 gallon primary clarifier tank for separation of light oils and solids and then to a 570,000 gallon secondary clarifier (surge tank). The tank is covered, insulated and has provisions for heat addition. The WAL temperature is controlled at 140°F. A layer of light oil is maintained on the surface of the clarifier to inhibit transfer of oxygen to the WAL as oxygen could create additional suspended solids due to biological activity.

Discharge from the primary clarifier is piped to a surge tank for equalization and surge capacity. Similar to the clarifier, this tank is covered, insulated, and requires maintenance of a light oil layer to inhibit oxygen transfer.

Heat Exchangers - The WAL is pumped from the surge tank to spiral type heat exchangers to cool the fluid prior to processing through precoat pressure leaf filters. Cooling causes precipitation of solids which would otherwise plug the deep well upon blending (cooling) with the cooler fluid (connate water) in the Mt. Simon disposal reservoir.

Leaf and Polishing Filters - Three horizontal diatomaceous earth precoat leaf filters are used for removal of suspended solids. To avoid plugging the deep well, suspended solids must be less than about 1 micron in diameter, therefore the WAL is next directed to one of four final polishing filters.

Waste Ammonia Liquor Storage Tank - Filtered WAL is discharged to a 60,000 gallon storage tank. This tank is used as a pumping reservoir and also provides storage capacity.

Pumps - The waste is injected into either WAL-1 or WAL-2 via positive displacement pumps.

K.6 ANNULUS PRESSURE MAINTENANCE SYSTEM

All of Bethlehem Steels injection wells utilize a seal pot system, pressurized with a nitrogen blanket, to maintain the required pressure on the annulus between the injection tubing and the well casing strings. Annulus pressure is continuously monitored, and recorded by chart recorders.

K.7 ALARM AND SHUT-OFF SYSTEMS

Bethlehem Steel utilizes automatic alarms and automatic shutdowns on the WAL wells in case of high injection pressure, low annulus pressure or low annulus vs injection pressure differential.

The SPL well utilizes automatic alarms to alert the well operator in case of high injection pressure, low annulus pressure or low annulus vs injection pressure differential. The operator must initiate normal well shut down procedures manually

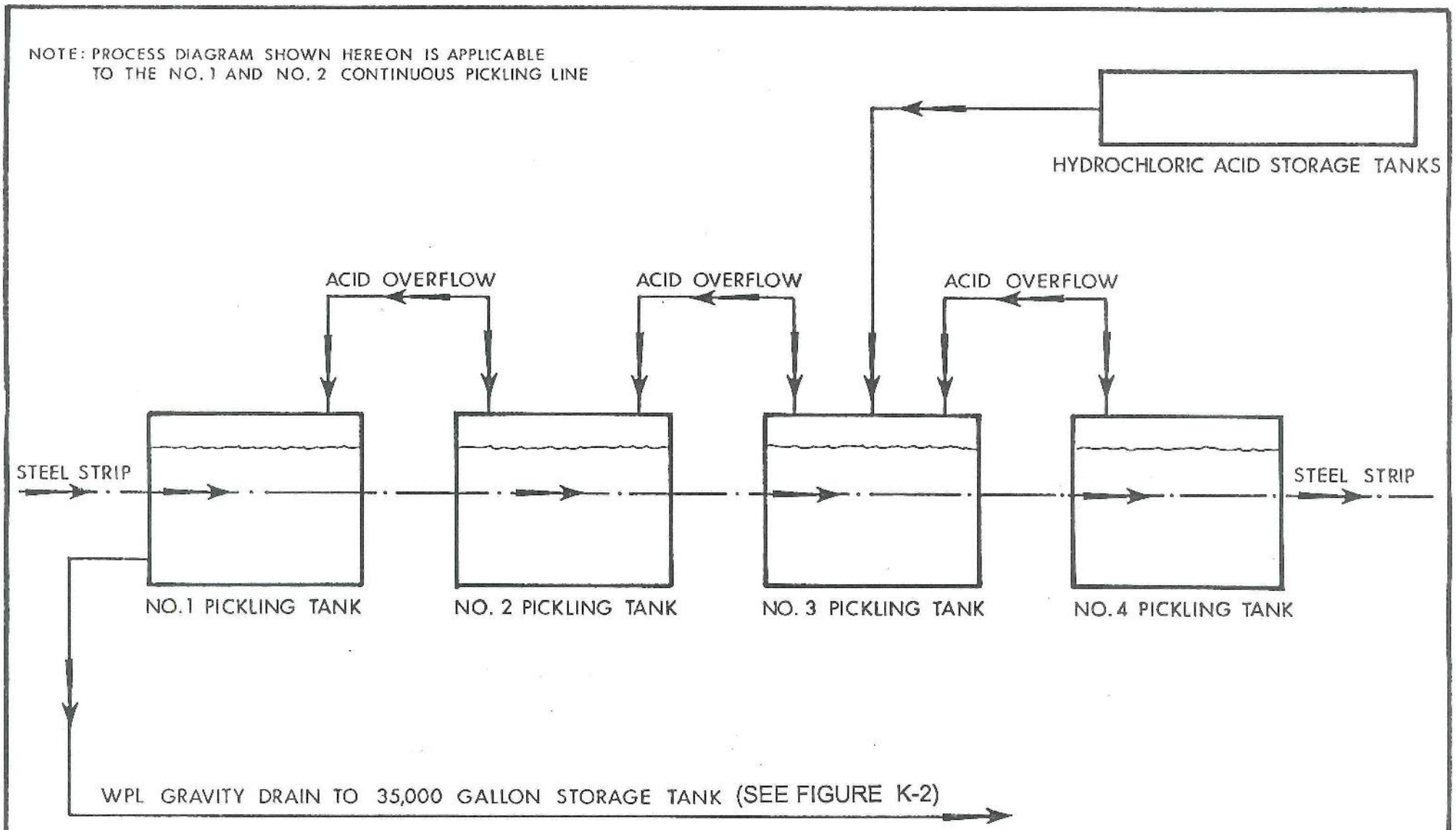

FIGURE K-1

BETHLEHEM STEEL CORPORATION — BURNS HARBOR PLANT

PROCESS DIAGRAM, NO. 1 AND NO. 2 CONTINUOUS PICKLING LINES

WASTE PICKLE LIQUOR (WPL) GENERATION

BETHLEHEM STEEL CORPORATION, BURNS HARBOR PLANT

SCHEMATIC FLOW DIAGRAM OF WASTE PICKLE LIQUOR (WPL) TREATMENT/DEEPWELL DISPOSAL SYSTEM

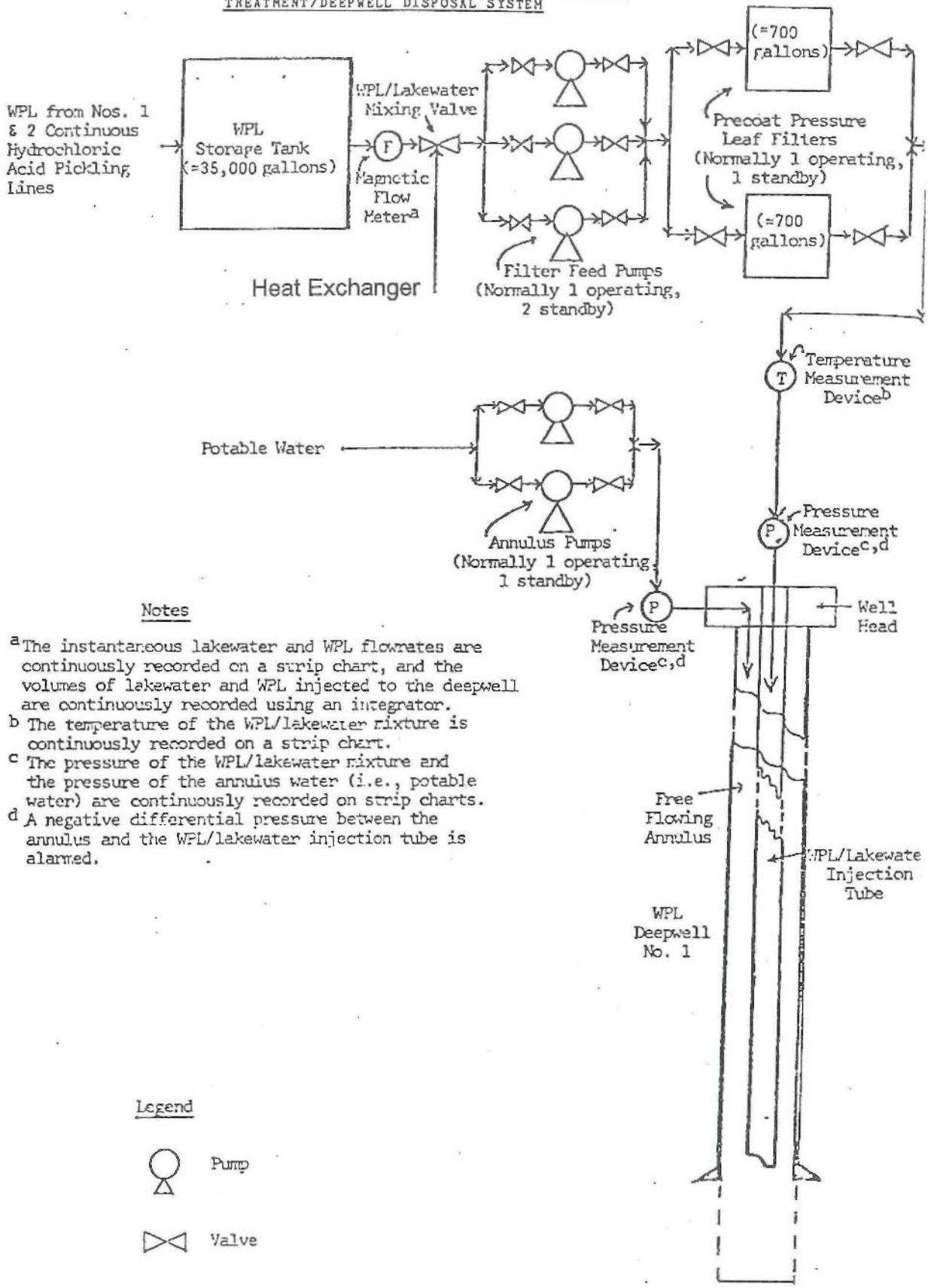

Notes

[a] The instantaneous lakewater and WPL flowrates are continuously recorded on a strip chart, and the volumes of lakewater and WPL injected to the deepwell are continuously recorded using an integrator.

[b] The temperature of the WPL/lakewater mixture is continuously recorded on a strip chart.

[c] The pressure of the WPL/lakewater mixture and the pressure of the annulus water (i.e., potable water) are continuously recorded on strip charts.

[d] A negative differential pressure between the annulus and the WPL/lakewater injection tube is alarmed.

FIGURE K-2

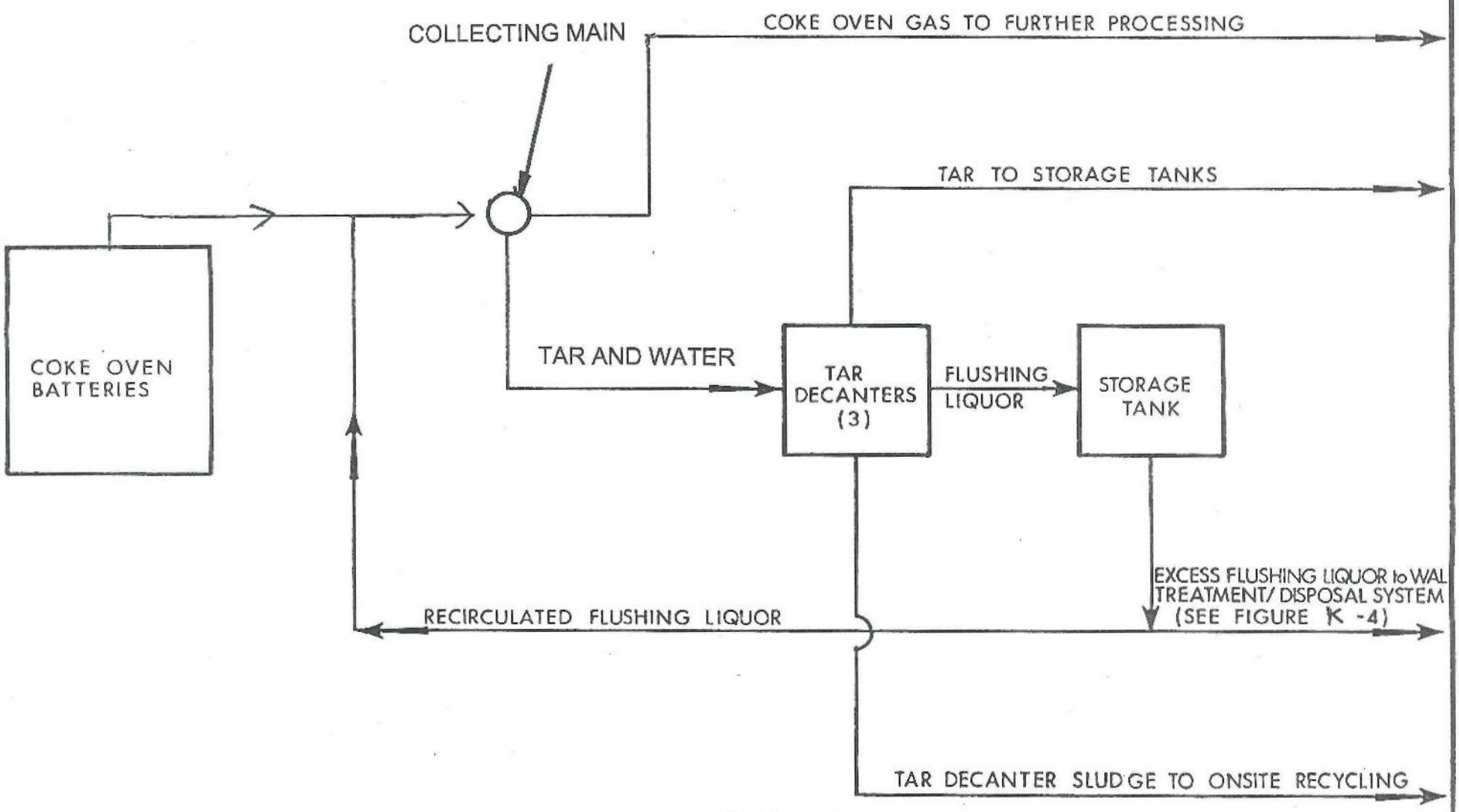

FIGURE K-3

BETHLEHEM STEEL CORPORATION — BURNS HARBOR PLANT

PROCESS DIAGRAM, COAL CHEMICAL PLANT
WASTE AMMONIA LIQUOR GENERATION

BETHLEHEM STEEL CORPORATION, BURNS HARBOR PLANT

SCHEMATIC FLOW DIAGRAM OF WASTE AMMONIA LIQUOR (WAL) TREATMENT/DEEPWELL DISPOSAL SYSTEM

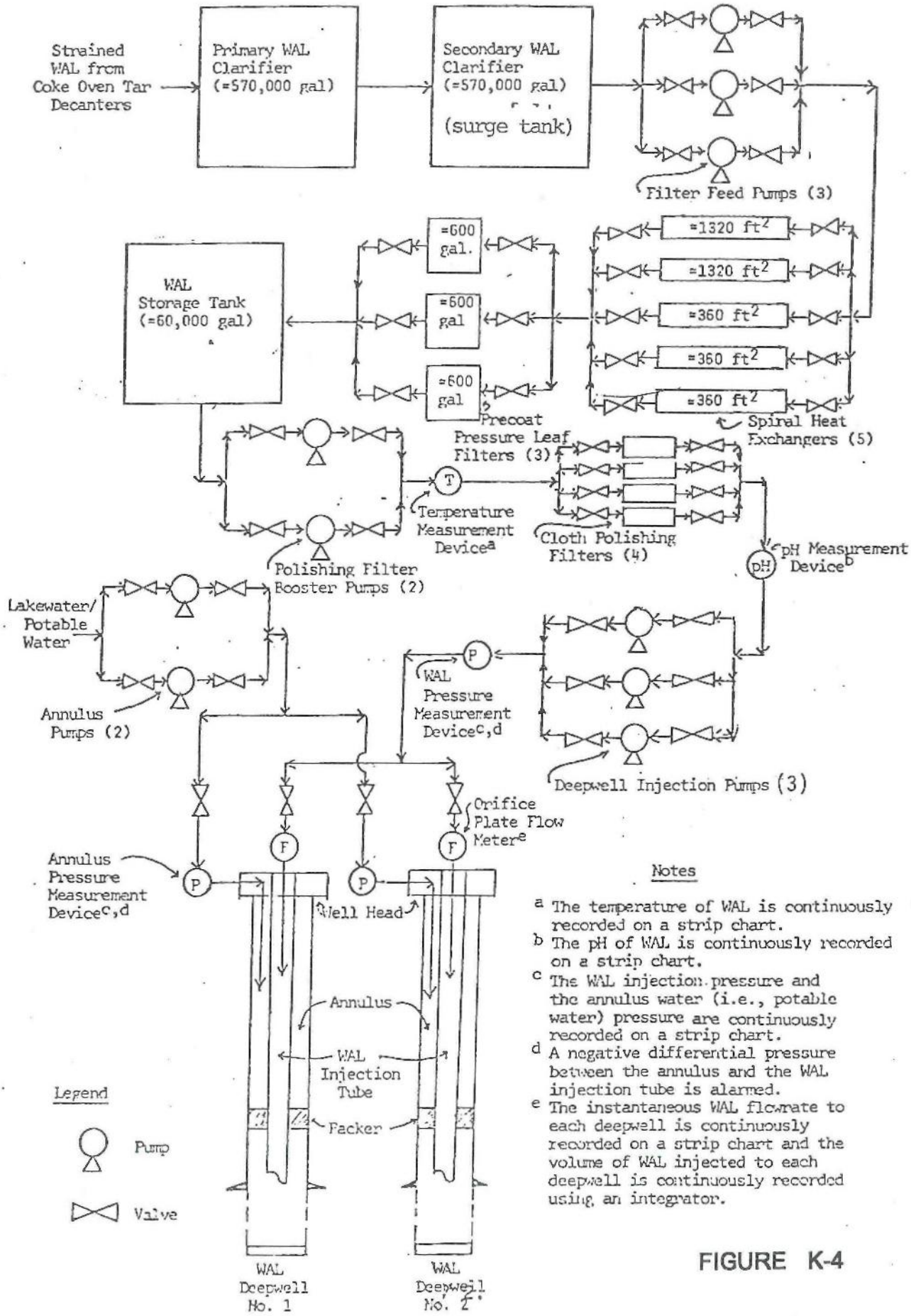

Notes

a The temperature of WAL is continuously recorded on a strip chart.

b The pH of WAL is continuously recorded on a strip chart.

c The WAL injection pressure and the annulus water (i.e., potable water) pressure are continuously recorded on a strip chart.

d A negative differential pressure between the annulus and the WAL injection tube is alarmed.

e The instantaneous WAL flowrate to each deepwell is continuously recorded on a strip chart and the volume of WAL injected to each deepwell is continuously recorded using an integrator.

FIGURE K-4

Does not apply to Bethlehem's three wells.

SECTION M - CONSTRUCTION DETAILS

Schematic diagrams demonstrating the subsurface construction of SPL-1, WAL-1 and WAL-2 are presented as Figures M-1, M-2 and M-3 respectively.

Wellhead diagrams for SPL-1, WAL-1 and WAL-2 are presented as Figures M-4, M-5 and M-6 respectively.

BETHLEHEM STEEL
Burns Harbor Division
SPL NO. 1
UIC Permit No. IN-127-1W-0001

FIGURE M-1

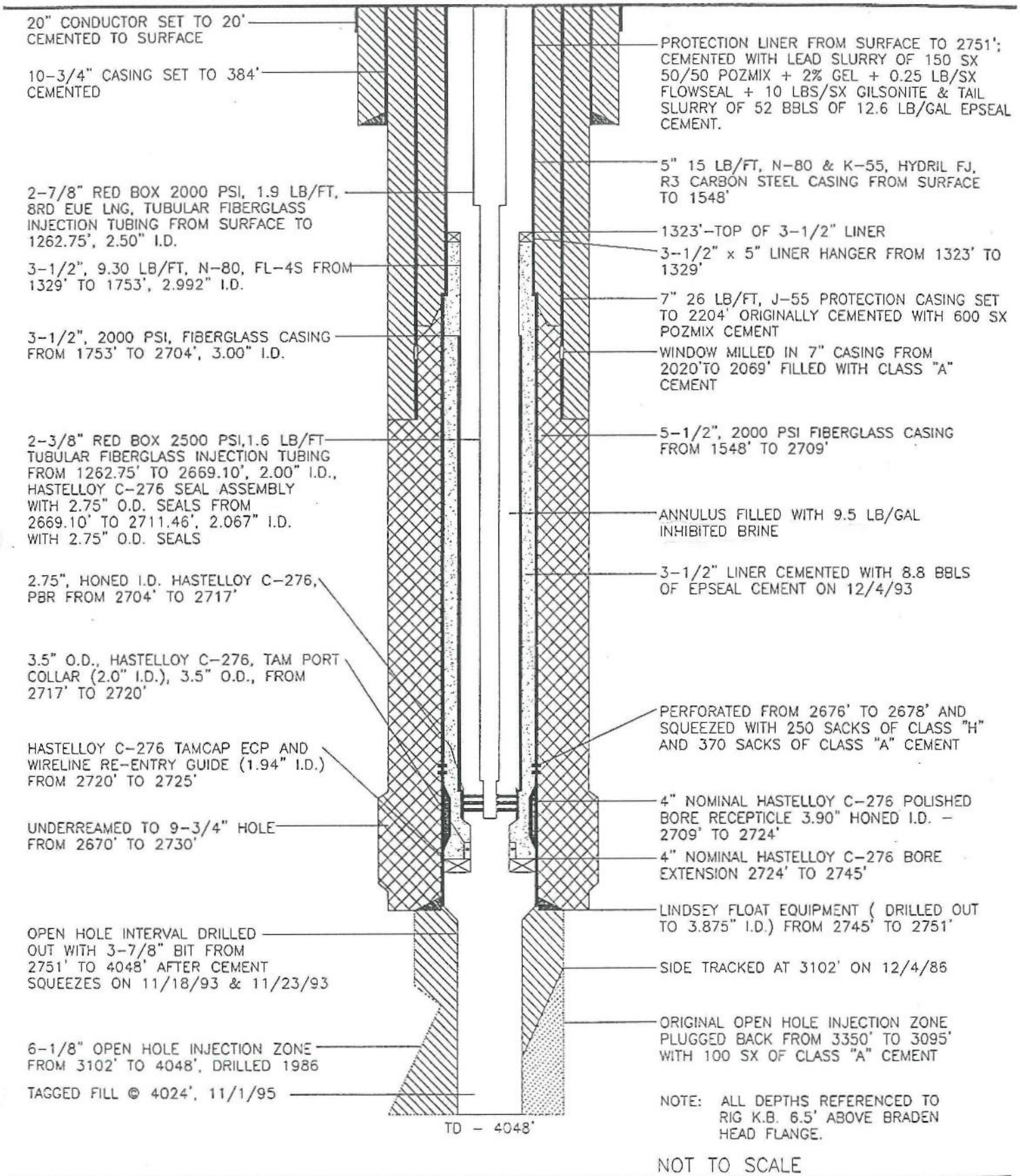

NOT TO SCALE

Texas World Operations, Inc.	Drawn By: DDD	C:\DWGS\BETHSTL\SPL-18	Checked By:	Date:

BETHLEHEM STEEL CORPORATION
BURNS HARBOR PLANT
Completion Schematic
WASTE AMMONIA LIQUOR WELL #1 (IN-127-1W-0003)

FIGURE M-2

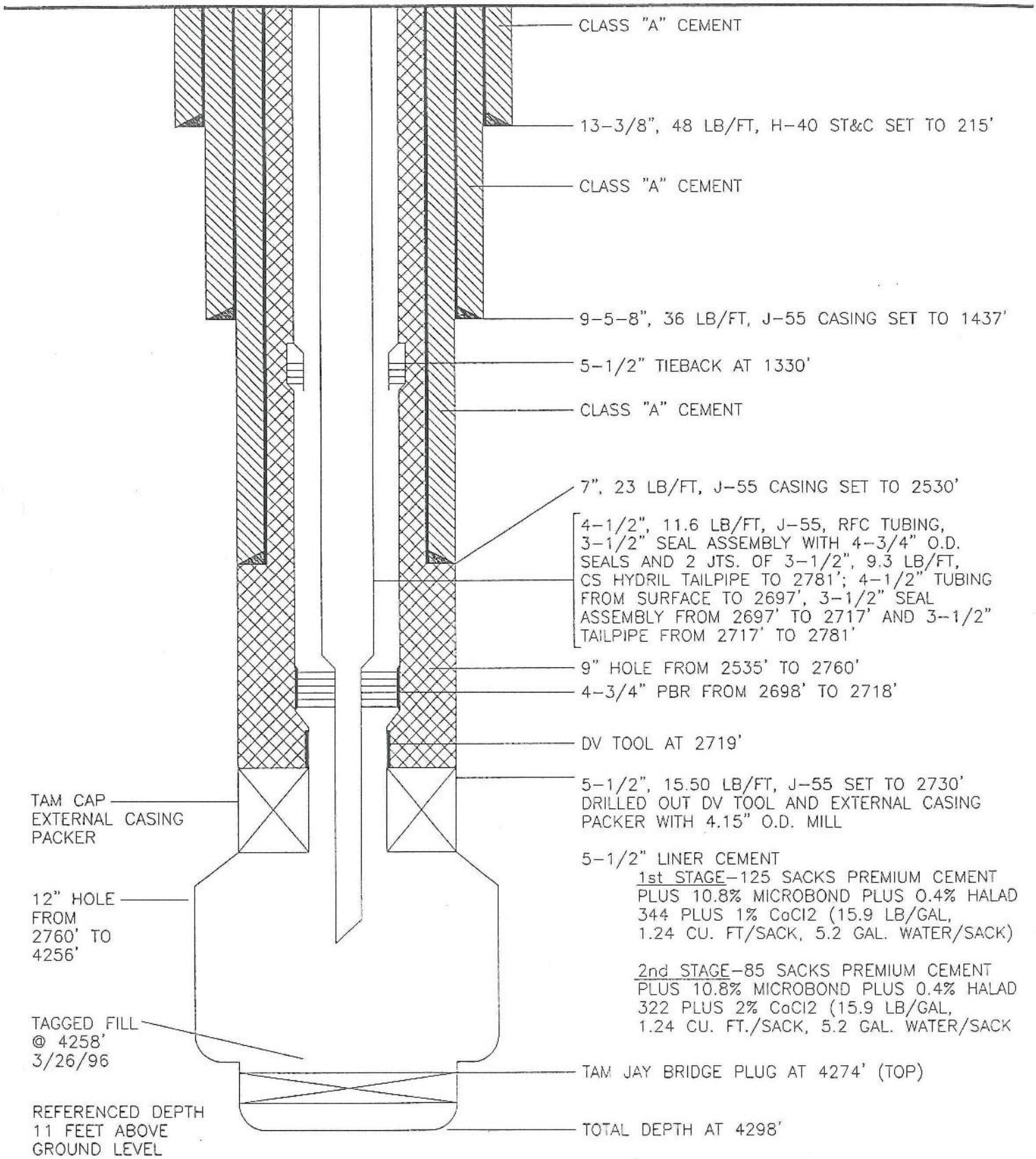

Texas World Operations, Inc.	Drawn By: DDD	C:\WELLS\BETHSTL\WAL-1	Checked By:	Date:

BETHLEHEM STEEL CORPORATION
BURNS HARBOR PLANT
Completion Schematic
WASTE AMMONIA LIQUOR WELL #2 (IN-127-1W-0004)

FIGURE M-3

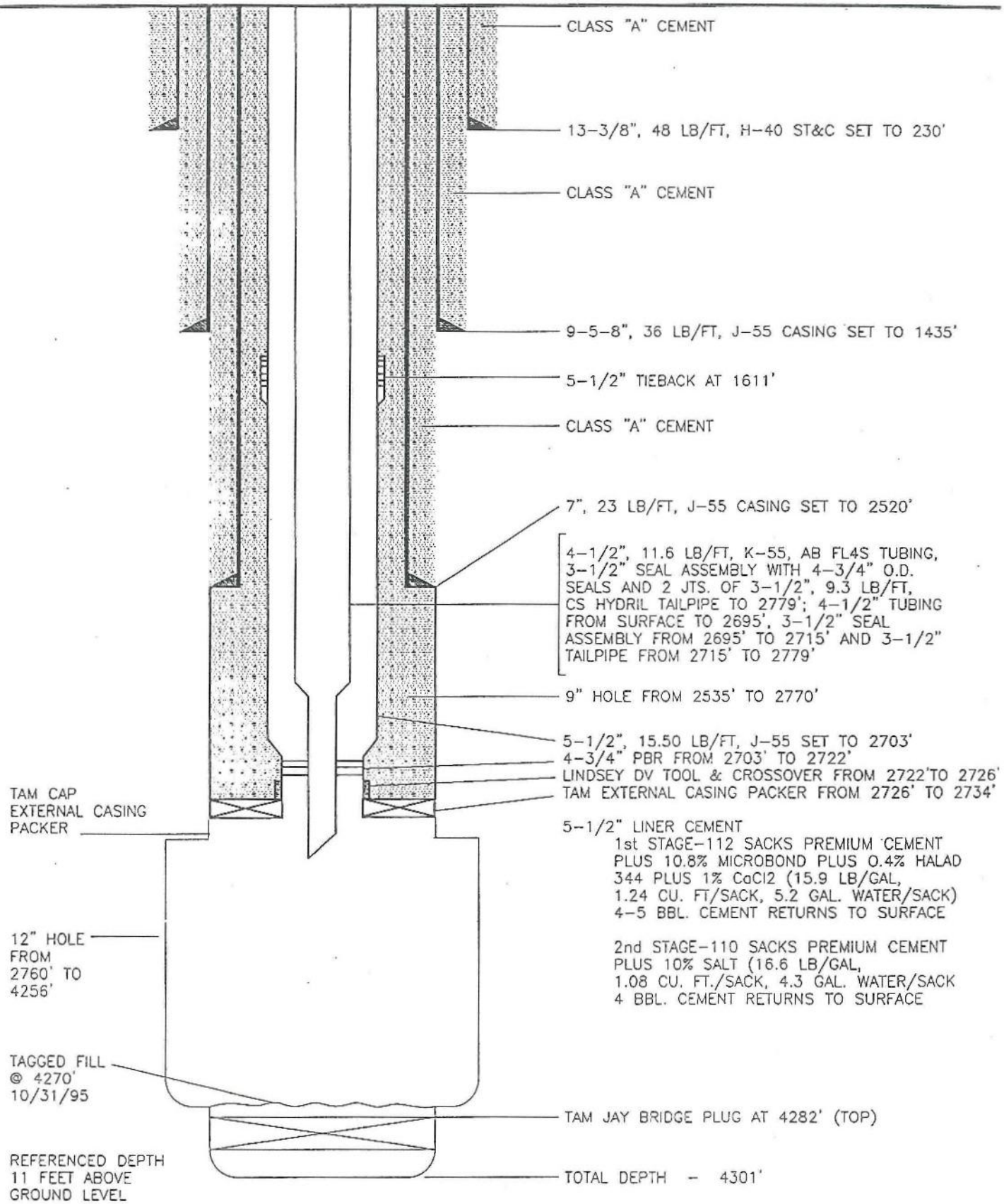

Texas World Operations, Inc.	Drawn By: DDD	C:\WELLS\BETHSTL\WAL-2	Checked By:	Date:

FIGURE M-4

BETHLEHEM STEEL
Burns Harbor Division
SPL NO. 1
UIC Permit No. IN-127-1W-0001

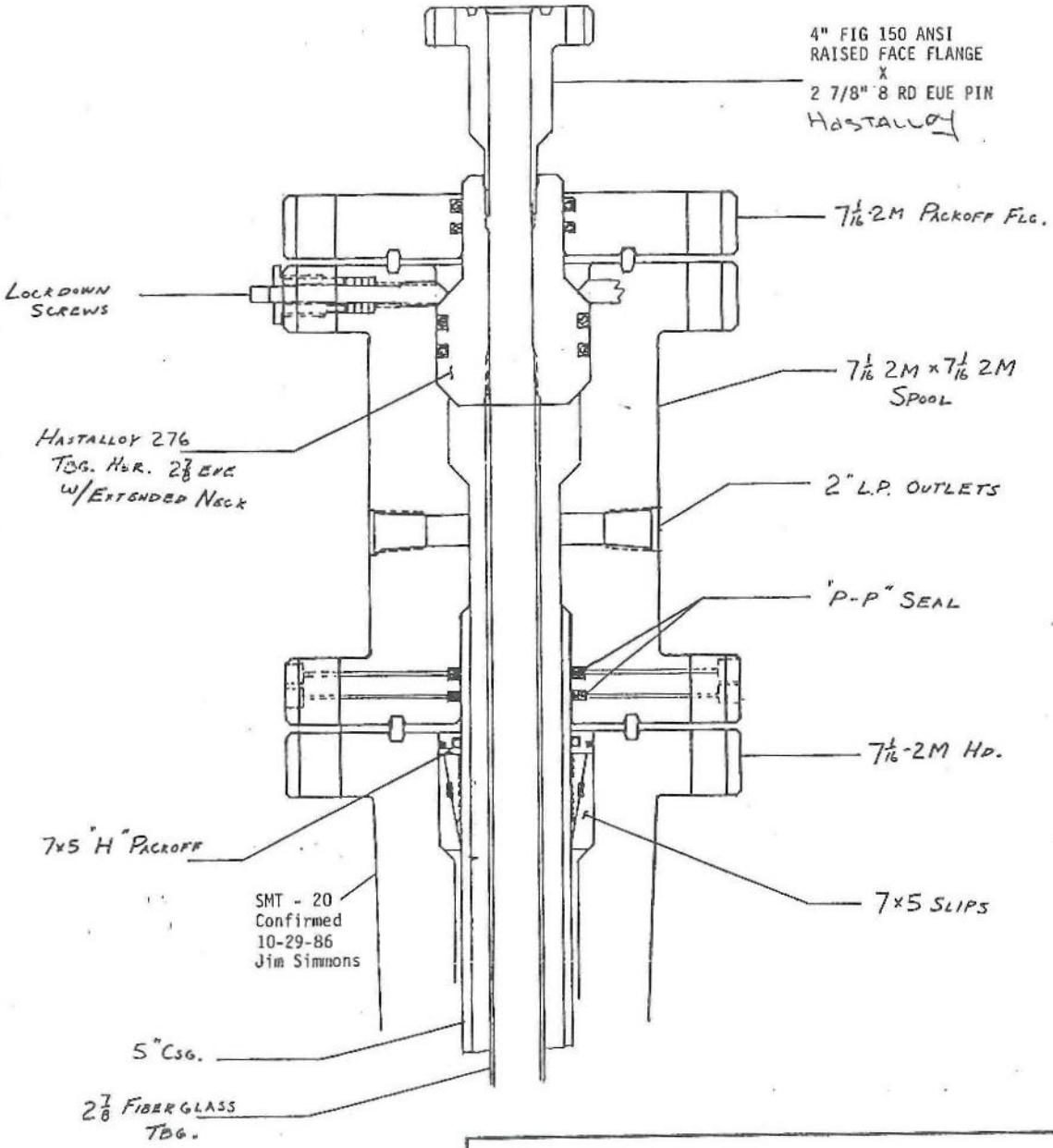

SUPERIOR MACHINE INC. HOUSTON TX.		
SCALE: NONE	APPROVED BY:	DRAWN BY F.W.W.
DATE: 10-23-86		REVISED
DISPOSAL WELL HOOKUP F/B+B OILFIELD PROD.		
		DRAWING NUMBER

FIGURE M-5

BETHLEHEM STEEL CORPORATION
BURNS HARBOR PLANT
Completion Schematic, June 1990
WASTE AMMONIA LIQUOR WELL #1 (IN-127-IW-0003

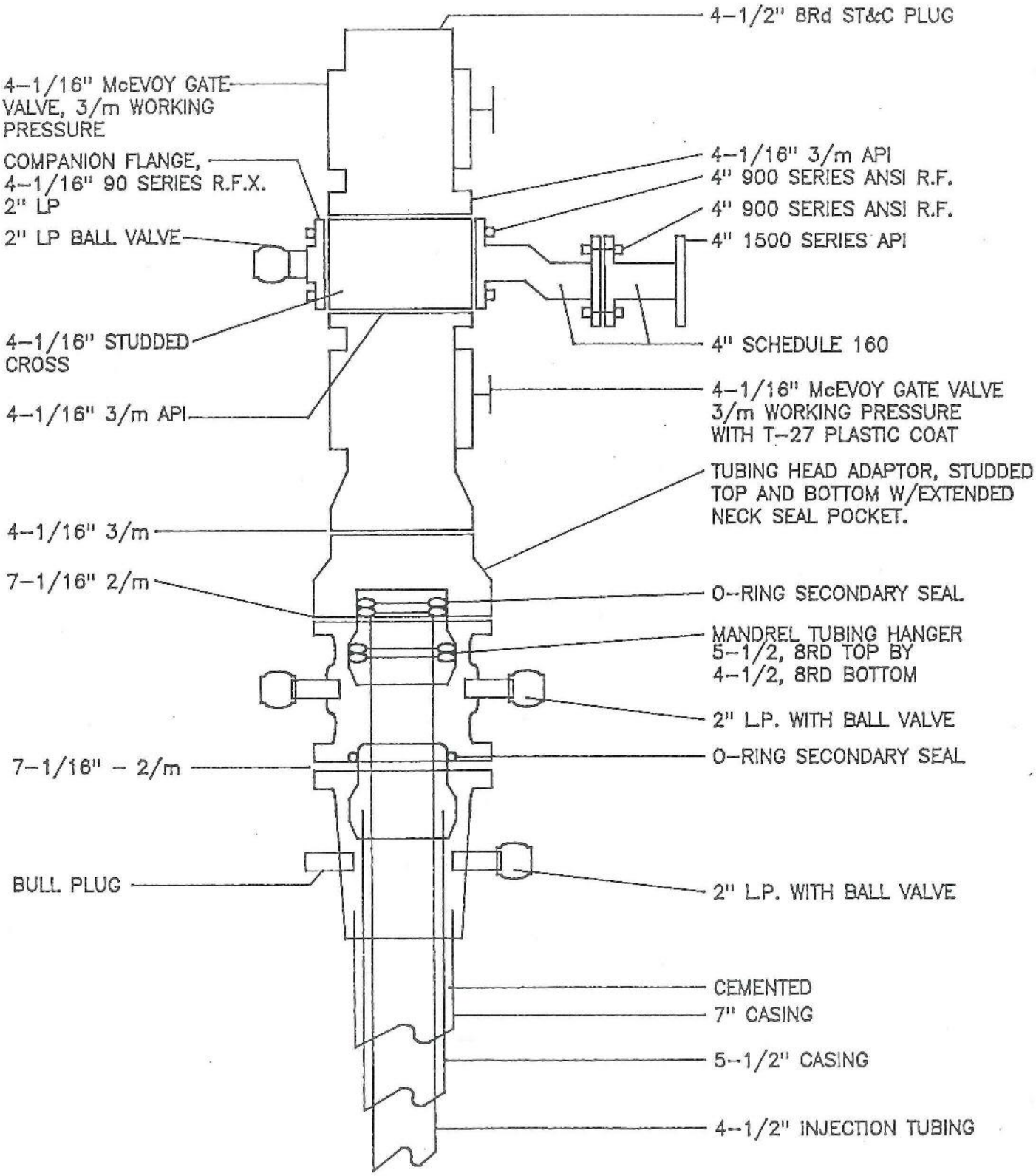

FIGURE M-6

BETHLEHEM STEEL CORPORATION
BURNS HARBOR PLANT
Completion Schematic, June 1990
WASTE AMMONIA LIQUOR WELL #2 (IN-127-IW-0004)

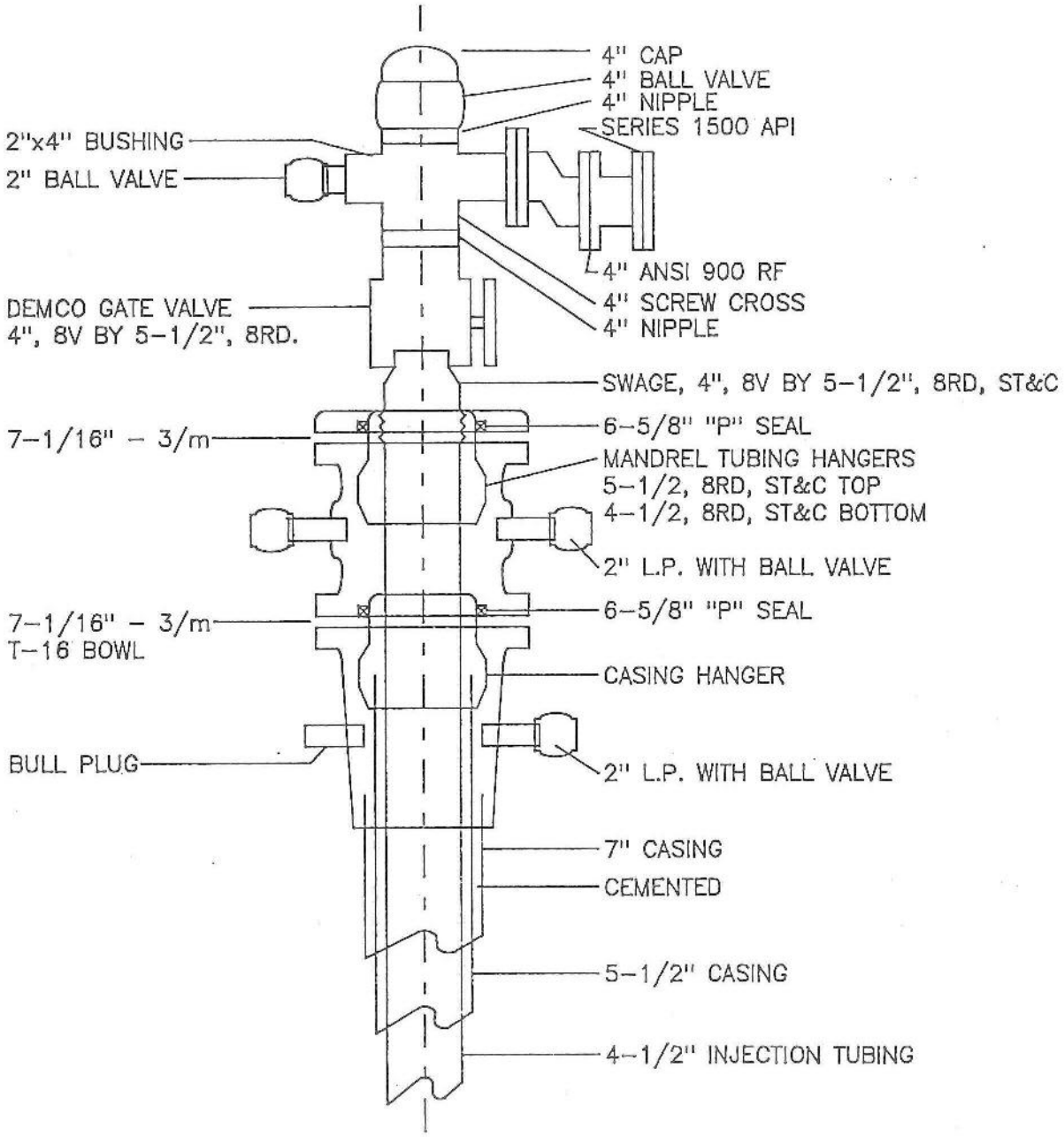

Does not apply.

O.1 WELL FAILURE

In order to protect human health and the environment, mechanical integrity of a waste injection well must be maintained. In the event that a loss of mechanical integrity is suspected by the operator the following steps will be implemented for all Bethlehem injection wells.

1. The operator will immediately begin to safely shut in the well using the normal shut down procedure.

2. The operator will notify designated Bethlehem Steel personnel of the suspected well failure and shut down.

3. The designated Bethlehem Steel personnel will be responsible for notification of Federal and State regulatory agencies as required by the well permit.

4. The United States Environmental Protection Agency, Region 5, will be notified of the suspected well failure and resultant shut down as required by permit conditions.

5. The mode of well failure will be identified.

6. A remedial plan will be prepared to determine what investigations and actions will be undertaken.

7. The remedial plan will be submitted to Federal and State regulatory agencies for approval before beginning any remedial action.

8. Upon authorization, the remedial plan will be implemented.

O.2 ALTERNATE DISPOSAL OR STORAGE

In case of failure of a WAL well, the other WAL well is available for injection service as a backup.

In case of failure of SPL-1, spent pickle liquor will be either stored on site (if possible), transferred to a truck loading station for sale as a substitute for a commercial produce, or shipped off site for proper disposal.

P.1 WASTE ANALYSIS PLAN

Bethlehem Steel's Burns Harbor Division has developed a comprehensive waste analysis plan for Waste Ammonia Liquor and Spent Pickle Liquor that are disposed of by deep well injection. The waste analysis plan is designed to insure the collection and accurate analysis of representative samples of the waste streams in order to properly characterize the injected fluids. The waste analysis plan indicates the chemical and physical parameters of the wastes which are proposed for analysis, and the frequency of collection and analysis. The waste analysis plan is located in Appendix C of this document.

P.2 CONTINUOUSLY MONITORED PARAMETERS

For each of its injection wells, Bethlehem Steel continuously monitors and records injection pressure, flow rate, volume and pressure on the annulus between the injection tubing and the long string casing. This data is recorded on continuous strip charts.

For SPL-1, strip charts and data sheets filled out by the operators each shift constitute the record of injection activity. The WAL wells are linked to a computerized data system that records numerous additional parameters. The computerized system has experienced some problems with data spikes, possibly due to interference in the transmission lines.

The daily well record for WAL-1 and WAL-2 recorded by the computer system includes:

Daily minimum differential pressure (annulus vs injection pressure)
Daily maximum pH
Daily minimum pH
Daily maximum injection temperature
Daily minimum injection temperature
Daily maximum injection pressure
Daily minimum injection pressure

Injection pressure instantaneous values (at 6 hour intervals)
Daily maximum annulus pressure
Daily minimum annulus pressure
Annulus pressure instantaneous values (at 6 hour intervals)
Daily maximum flow rate
Daily minimum flow rate
Flow rate instantaneous values (at 6 hour intervals)

P.3 SEAL POT LEVEL MONITORING AND RECORDING

Observations of the sight glass attached to the seal pot of the annulus monitoring system are made and recorded each shift by the well operators.

P.4 GROUNDWATER MONITORING PROGRAM

Bethlehem's exemption from the ban on continued injection of hazardous wastes included a condition that a groundwater monitoring program be fully implemented. The USEPA required Bethlehem Steel to install a monitor well completed in the Galesville Formation, capable of monitoring pressure and allowing for fluid sampling. The USEPA approved the Ground Water Monitoring Plan (GWMP) and associated Quality Assurance Project Plan (QAPjP) submitted by BSC describing the proposed installation and sampling plan for a deep monitor well completed in a ±30 foot thick interval across the lower portion of the Galesville Sandstone Formation. The Galesville immediately overlies the Eau Claire Formation confining zone at the Burns Harbor site. Well installation and completion operations were carried out between May 18 and August 9, 1995.

The GWMP and QAPjP outlined the long term sampling schedule, sampling, analysis, data validation, reporting procedures, and defined the chemical and physical parameters which would continue to be monitored during subsequent sampling events.

P.4.1 PURPOSE OF LONG TERM MONITORING

The long term monitoring plan provides for the ongoing operation of the monitoring well in a manner capable of confirming that waste is not migrating out of the injection zone, and that pressurization of the subsurface formations is consistent with that predicted by computer modeling, thereby increasing confidence in the no-migration petition. The methods being utilized with this well for confirmation of the no-migration petition model predictions are continuous monitoring of reservoir pressure within the lower Galesville Formation and periodic sampling and analysis of the interstitial fluids from the completion zone. The USEPA requires this ongoing confirmation of the injection zone's ability to properly contain injected waste in the manner predicted by the modeling simulation.

Of the above methods, continuous pressure monitoring in the Galesville zone is the most critical in determining the validity of the no-migration model simulation and early detection of any anomalous activity within the injection zone. The pressure front caused by waste injection operations propagates outward and upward through the injection zone formations in advance of the physical movement of injectate. Anomalous changes in reservoir pressure can be detected at an earlier point in time than actual chemical changes caused by injectate movement into the monitored zone.

P.4.2 PARAMETERS MONITORED

Continuously Monitored Data

Data recorded versus time includes:

1) Galesville reservoir pressure (extrapolated from expansion chamber pressure transmitted to surface via manometer system);
2) Barometric pressure at the well head;
3) Monitor well annulus pressure;
4) Monitor well annulus seal pot level; and
5) Temperature at the well head.

The above parameters are monitored and recorded continuously on a strip chart. The data are also digitally recorded on a computerized system with a fifteen

minute "snapshot" recording interval.

Ground Water Monitoring Parameters

For scheduled sampling events, the field parameters of pH, conductivity, oxidation reduction potential and temperature of produced fluids are monitored while the pump is operating during purging and sampling the well. Samples for laboratory analysis are only collected after the well has been purged of at least three well volumes of fluid, and three of the four required field parameters have stabilized).

Based on the results of the initial analysis of fluids recovered from the Galesville monitor interval, and following the specifications in the QAPjP, the parameters for continuing periodic sampling and analysis include:

<u>Required Parameters</u>
conductivity
pH
total nitrogen
nitrogen-ammonia
naphthalene
specific gravity
cyanide
total phenol (4AAP)
iron
benzene
chlorides
sulfate
sodium
calcium
magnesium
total dissolved solids
bicarbonate
carbonate
acidity

Swing Parameters Detected in Initial Sampling

The parameters listed below were identified in the environmental sample and/or the duplicate sample during the initial sampling event.

potassium
strontium

This compilation of 21 parameters constitutes the ongoing monitoring list. Methods of analysis and procedures to be followed are those described in the QAPjP addendum to the GWMP. The analytical data are subjected to independent validation.

P&A PLAN

Spent Pickle Liquor Well No. 1

Permit No. IN-127-1W-001

1. Obtain approval from the regulatory agency prior to commencing operations. Conduct the required mechanical integrity testing and ambient monitoring testing and submit the test data to the regulatory agency.
2. Move in and rig up a workover rig.
3. Flush the wellbore with water with a total flush volume of at least three wellbore volumes.
4. Dismantle the wellhead and install blowout preventers.
5. Remove the injection tubing and seal assembly.
6. Place Class "H" cement in the openhole interval from the top of fill to 2,787 feet. The cement will be balanced in place in stages.
7. Place acid resistant cement from the top of the Class "H" plug to the bottom of the Eau Claire formation at approximately 2500 feet.
8. Wait on cement for 48 hours.
9. Fill the casing (3-1/2-inch liner and 5-inch casing) with cement from the top of the acid resistant cement to 3 feet below the surface with Class "A" cement. This top plug will be pumped in 500-1,000 feet stages and balanced in place. An appropriate length of the workstring will be pulled and laid down. The workstring will be reverse circulated to confirm that it is still in cement from the previous stage and the process will be repeated until the cement is 3 feet below the surface.
10. Rig down and move out the workover equipment.
11. Wait on cement for at least eight hours.
12. Cut off the casing 3 feet below ground level. Weld a steel plate on top of the casing. The steel plate should be inscribed with the following information:

    Bethlehem Steel Corporation
    Spent Pickle Liquor Well No. 1
    Permit No. IN-127-1W-0001
    P& A ____.

POST CLOSURE CARE PLAN

The procedures for post closure care described herein are to be initiated upon permanent cessation of injection, and closure (plugging and abandonment) of Bethlehem Steel's Injection Wells SPL-1, WAL-1 and WAL-2 (Permit Numbers IN-127-1W-0001, IN-127-1W-0003 and IN-127-1W-0004, respectively), at the Burns Harbor Division in northwestern Indiana. These procedures are in accordance with the requirements of 40 CFR 146.72 regarding post-closure. Any proposed significant revisions to this plan over the life of the well will be submitted not latter than the date of the closure report required under 40 CFR 146.71 (a) (7) (c).

The following information is a required part of the post closure plan:

1) Pressure in the injection zone before injection began:

The original pressure in the injection zone prior to the initiation of injection activities was measured during the construction of each well. The pre-injection pressures were as follows:

Well	Pressure (psi)	Depth(ft)	Gradient (psi/ft)
SPL-1	1365	3250	0.42
WAL-1	1429	3402	0.42
WAL-2	1432	3410	0.4199

The pre-injection pressure in the injection zone at a depth of 2180 ft would be 915.5 psi.

2) Anticipated pressure in the injection zone at the time of closure:

Modeling performed for the Bethlehem petition demonstration indicated the maximum pressure increase in the injection zone following a twenty year future operational period at maximum rates and pressures would be 300 psi (Intera Technologies Modeling Report, Figure-7). Therefore, the anticipated pressure in the injection zone in the year 2007 is expected to be 1215.5 psi at a depth of 2180 feet.

3) The predicted time until pressure in the injection zone decays to the point that the well's cone of influence no longer intersects the base of the lowermost USDW:

Pressure decay in SPL-1 is nearly instantaneous following well shut down, therefore the decay time will be calculated based on the WAL wells.

From the time injection ceases, it is expected to take approximately 70.89 hours until the cone of influence from the WAL wells no longer exists. This is based on the same assumption used in the petition modeling, that all waste ammonia liquor in the past and future, is injected into a single well.

The injection induced reservoir pressure after injection ceases can be described by the following equation:

$$\Delta p = 162.6 \frac{q\,u}{k\,h} \log\left(\frac{t_p + \Delta t}{\Delta t}\right)$$

rearranging:

$$\Delta t = \frac{t_p}{antilog\left(\frac{\Delta p}{162.6\,q}\,\frac{kh}{\mu}\right) - 1}$$

where:

t_p	=	pseudo-injection time of 256,045 hours (10,669 days)
Δp	=	106 psi reservoir pressure increase required to cause a cone of influence to exist
q	=	maximum WAL injection rate of 8,229 barrels/day (240 gpm)
$\frac{kh}{\mu}$	=	44,908 md-ft/cp (transmissivity product from March, 1996 WAL-1 test)

$$\Delta t = \frac{256{,}045}{antilog\left(\frac{106}{162.6 \times 8{,}229}\;44{,}908\right) - 1} = 70.89\,hours = 2.95\;days$$

The pseudo-injection time includes the historical period which encompasses both injection (at various rates) and shut-in periods, and the future injection period at an assumed

constant rate. The pseudo-injection time that represents the end of the year 2007 is calculated as follows:

$$\frac{\textit{Historical Volume} \;+\; \textit{Future Volume}}{\textit{Final Stabilized Injection Rate}} = \frac{V_H + V_F}{Q}$$

Historical injection volumes through October 7, 1997 for Bethlehem's wells are as follows:

WAL-1	1,000,238,386 gallons
WAL-2	1,231,619,909 gallons
SPL-1	162,218,793 gallons
Total	2,394,077,088 gallons

where:

V_H = 2,394,077,088 gallons through October 7, 1997 (for added conservatism, this assumes that all WAL *and SPL* historical volumes had been injected into a single well)

V_F = 1,292,976,000 gallons October, 1997 through December 31, 2007 at a continuous 240 gallons per minute rate

Q = 240 gals/min x 60 min/hr (permitted maximum rate) = 14,400 gallons per hour

$$\frac{2{,}394{,}077{,}088 \;+\; 1{,}292{,}976{,}000}{14{,}400} = 256{,}045\,\textit{hours} = 10{,}669\,\textit{days}$$

4) Predicted position of the waste front at closure:

The predicted position of the waste front at the time of well closure (the year 2007 in the Bethlehem petition demonstration) is approximately 2344 feet from the WAL wells and 1295 feet from SPL-1 (Intera Technologies Modeling Report, Table-14).

5) Status of any cleanups required under 40 CFR 146.64:

The cited regulation concerns corrective actions for wells within the area-of-review. No corrective actions are currently underway or planned within the

Bethlehem Steel AOR

6) Estimated costs of post closure care:

The estimated costs of post closure care are $2,500.

Upon closure of any of Bethlehem Steel's injection wells , Bethlehem shall:

1) Continue and complete any cleanup action required under 40 CFR 146.64, if applicable.

2) Continue post closure maintenance and monitoring of any ground water monitoring wells required under the applicable permits until pressure in the injection zone decays to the point that the injection well's cone of influence no longer intersects the base of the lowermost USDW (top of the Marquoketa Shale).

3) Submit a survey plat map to the local zoning authority designated by the Director, and to the Regional Administrator of the Region 5 USEPA office. The survey plat map shall indicate the location of the closed well relative to permanently survey benchmarks.

4) Provide appropriate notification and information to state and local authorities as have cognizance over drilling activities to enable them to impose such appropriate conditions on subsequent drilling activities that may penetrate the well's confining or injection zone.

5) Retain, for a period of three years following well closure, records reflecting the nature, composition and volume of all injected fluids. The Director shall require Bethlehem Steel to deliver the records to the Director at the conclusion of the retention period, and the records shall thereafter be retained at a location designated by the Director for that purpose.

6) Upon closure of the well in accordance with the approved closure plan, Bethlehem Steel shall record a notation on the deed to the facility property, or on some other instrument that is normally examined during title search, that will in perpetuity provide

any potential purchaser of the property with the following information:

a) The fact that the land has been used to manage and dispose hazardous waste(s) in deep wells,

b) The name(s) of the state agencies and/or local authorities with which the survey plat map was filed, and the address of the regional USEPA office to which it was submitted.

c) The type and volume of waste injected, the injection interval or intervals into which it was injected, the name(s) of the generator(s) of the waste and the time period over which the injection occurred.

Bethlehem Steel shall comply with the post closure financial assurance requirements of 40 CFR 146.73, and acknowledges that the obligation to maintain financial responsibility for post closure care survives the termination of the UIC Permit(s) or the cessation of injection.

P&A PLAN

Waste Ammonia Liquor Well No. 1

Permit No. IN-127-1W-003

1. Obtain approval from the regulatory agency prior to commencing operations. Conduct the required mechanical integrity testing and ambient monitoring testing and submit the test data to the regulatory agency.
2. Move in and rig up a workover rig.
3. Flush the wellbore with water with a total flush volume of at least three wellbore volumes.
4. Dismantle the wellhead and install blowout preventers.
5. Remove the injection tubing and seal assembly.
6. Set a cement retainer at 2,650 feet and pressure test the retainer.
7. Squeeze Class "A" cement to fill the injection zone and casing below the cement retainer. Cement volume to be pumped will be equal to the openhole and casing volume beneath the retainer plus 25% excess.
8. Fill the remainder of the 5-1/2-inch casing from the top of the retainer with Class "A" cement. This top plug will be pumped in 500-1,000 feet stages and balanced in place. An appropriate length of the workstring will be pulled and laid down. The workstring will be reverse circulated to confirm that it is still in cement from the previous stage and the process will be repeated until the cement is 3 feet below the surface.
9. Rig down and move out the workover equipment.
10. Wait on cement for at least eight hours.
11. Cut off the casing 3 feet below ground level. Weld a steel plate on top of the casing. The steel plate should be inscribed with the following information:

    Bethlehem Steel Corporation
    Waste Ammonia Liquor Well No. 1
    Permit No. IN-127-1W-0003
    P& A ____.

P&A PLAN

Waste Ammonia Liquor Well No. 2

Permit No. IN-127-1W-004

1. Obtain approval from the regulatory agency prior to commencing operations. Conduct the required mechanical integrity testing and ambient monitoring testing and submit the test data to the regulatory agency.
2. Move in and rig up a workover rig.
3. Flush the wellbore with water with a total flush volume of at least three wellbore volumes.
4. Dismantle the wellhead and install blowout preventers.
5. Remove the injection tubing and seal assembly.
6. Set a cement retainer at 2,650 feet and pressure test the retainer.
7. Squeeze Class "A" cement to fill the injection zone and casing below the cement retainer. Cement volume to be pumped will be equal to the openhole and casing volume beneath the retainer plus 25% excess.
8. Fill the remainder of the 5-1/2-inch casing from the top of the retainer with Class "A" cement. This top plug will be pumped in 500-1,000 feet stages and balanced in place. An appropriate length of the workstring will be pulled and laid down. The workstring will be reverse circulated to confirm that it is still in cement from the previous stage and the process will be repeated until the cement is 3 feet below the surface.
9. Rig down and move out the workover equipment.
10. Wait on cement for at least eight hours.
11. Cut off the casing 3 feet below ground level. Weld a steel plate on top of the casing. The steel plate should be inscribed with the following information:

    Bethlehem Steel Corporation
    Waste Ammonia Liquor Well No. 2
    Permit No. IN-127-1W-0004
    P& A ____.

The plugging and abandonment cost estimates for Bethlehem Steel's injection wells are as follows:

SPL-1	$156,400
WAL-1	$90,800
WAL-2	$90,800

Additionally, the 1997 cost estimate for plugging and abandoning the Galesville Sandstone Monitoring Well is $83,700.

A 1997 total of $421,700 is required to plug and abandon the three injection wells and the deep monitor well.

Appendix D contains data that documents the financial assurance mechanism.

Does not apply.

SECTION T - EXISTING EPA PERMITS

A summary of past and existing environmental permits for the Bethlehem Steel Burns Harbor Facility is listed in Table T-1.

TABLE T-1

Bethlehem Steel Corporation, Burns Harbor Division

Summary of Past and Present Environmental Permits
Based on Information Currently Available in Files at the Burns Harbor Division

Environmental Permit Description
NPDES Permit No. IN0000175
Waste Ammonia Liquor Injection Well Nos. 1 and 2, UIC Permit Nos. IN-127-1W-003 and IN-127-1W-004
Spent Pickle Liquor Well No. 1, UIC Permit No. IN-127-1W-0001
327 IAC Acticle 3 Construction Permit for Vacuum Degasser Wastewater Treatment Plant
Air Operating Permit, Coke Oven Battery No. 1
Air Operating Permit, Coke Oven Battery No. 2
Air Construction Permit, Coke Oven Battery No. 2 Renovation
Air Operating Permit Coal, Coke, Ore and Stone Handling Facilities
Air Operating Permit Renewal, Coke Ovens Materials Handling Facilities, Permit No. 64-01-87-0169
Air Construction Permit, Venturi Scrubber on the Pushing Operations on Each Coke Battery
Air Construction Permit, Burns Harbor Pushing Emission Control System
Air Operating Permit, 24 Batch Annealing (BA) Furnaces
Air Operating Permit, Batch and Continuous Annealing Operations, Permit No. 64-01-87-0172
Air Operating Permit, Cold Rolled Continuous Annealing Line Cooling Tower
Air Operating Permit, Cold Strip Mill Continuous Pickle Line Nos. 1 and 2, Burns Harbor Plant, Permit No. 64-01-87-0174
Operating Permit, Cold Strip Mill Electogalvanizing Line, Permit No. 64-01-87-170
Air Operating Permit, Tin Plate and Chrome Type Tin-Free Steel Facilities

TABLE T-1

Bethlehem Steel Corporation, Burns Harbor Division

Summary of Past and Present Environmental Permits
Based on Information Currently Available in Files at the Burns Harbor Division

Environmental Permit Description
Air Operating Permit, Cold Strip Mill, Continuous Heat Treat Line, Heat and Soak Zone
Air Operating Permit, Cold Strip Mill, Continuous Heat Treat Line, Reheat Zone
Air Operating Permit, Cold Strip Mill, Two Stand Reduction Mill, Oil Mist Eliminator
Air Operating Permit, Two Stand Cold Reduction Mill, Permit No. 64-01-87-0171
Air Operating Permit, Cold Strip Mill, Five-Stand Cold Reduction Mill, Oil Mist Eliminator, Demister
Air Operating Permit, Five-Stand Cold Reduction Mill, Permit No. 64-01-87-0173"
Air Operating Permit, BOF Shop, Conveyor Junction H1
Air Operating Permit, BOF Shop, Conveyor Junction H2
Air Operating Permit, BOF Shop Materials Handling and Storage Facilities, Permit No, 64-01-87-0168
Air Operating Permit,BOF Shop, Track Hopper Building
Air Operating Permit, BOF Shop, No. 1 Vessel Storage Bins
Air Operating Permit,BOF Shop No. 2 Vessel Storage Bins
Air Operating Permit, BOF Shop, No. 1 Vessel Weigh Hopper
Air Operating Permit, BOF Shop, No. 2 Vessel Weigh Hopper
Air Operating Permit, BOF Shop No. 3 Vessel Weigh Hopper
Air Operating Permit ID 127-00001, BOF Hot Metal Desulfurization Station No. 3, Air Construction Permit CP 127-2480
Air Operating Permit, BOF Shop No. 1 West Hot Metal Reladling/Desulfurization Station
Air Construction Permit, Hot Metal Desulfurization Equipment at Existing BOF Shop Hot Metal Reladling Station

TABLE T-1

Bethlehem Steel Corporation, Burns Harbor Division

Summary of Past and Present Environmental Permits
Based on Information Currently Available in Files at the Burns Harbor Division

Environmental Permit Description
Air Construction Permit, BOF Ladle Treatment Station Baghouse Modification
Air Operating Permit, 80-Inch Hot Strip Mill, Nos. 1,2 and 3 Continuous Reheat Furnaces
Air Operating Permit 80-Inch Hot Strip Mill Operation, Permit No. 64-01-87-0163
Air Operating Permit OP 127-00001, Hot Dip Coating Line, Air Construction Permit CP 127-1989
Air Operating Permit, Hot Metal (Iron) Desulfurization Facility
Air Construction Permit, Vacuum Degasser

U.1 HISTORY OF OWNERSHIP AND OPERATION

Bethlehem produces steel at the Burns Harbor Division, an integrated steel mill located in Porter County near the towns of Portage and Burns Harbor, Indiana (on the southern shore of Lake Michigan between Gary, Indiana and Michigan City, Indiana). Approximately 6,000 men and women are employed at the Burns Harbor Division. The Burns Harbor Division was built on a "green field" site assembled from numerous land parcels in private ownership. Previous land use at the site was residential, agricultural and recreational. Industrial activities at the site have been conducted by Bethlehem and its support contractors since 1964.

Steel production consists of (1) the smelting of iron ore into molten iron in a blast furnace: (2) the conversion of the molten iron into molten steel by removing excess carbon, silicon, and sulphur in a basic oxygen furnace: and (3) the conversion of the molten steel into steel slabs that are then rolled into steel sheets, plates, and bands (coiled sheet steel). The Division's manufacturing facilities include primary (cokemaking, ironmaking, and steel making) facilities, as well as secondary (steel-finishing facilities consisting of hot-forming and cold-finishing) mills. The Division's products include hot-rolled bands, hot-rolled sheets and plates and cold-rolled sheets.

History of Division Operations

The following provides a description of the construction and operations history of the Burns Harbor Division.

Construction History

In 1962, Bethlehem Steel announced plans to construct a steel plant on a 3,300 acre site near Burns Harbor, Indiana. The plant was envisioned from the start to become a fully integrated steel making facility, producing finished steel products from iron ore, coal and other raw materials. Construction was conducted in three phases.

Phase 1 consisted of the construction of the 160-inch Plate Mill, Cold Rolled Sheet and Tin Mill and 80-inch Hot Strip Mill. Steel slabs and bands (i.e., hot rolled sheet steel) used as the inputs for these facilities were produced at other steel plants and shipped to the Burns Harbor Division. Phase 2 was designed to provide the Burns Harbor Division with the ability to produce steel on-site from raw materials. These primary facilities consisted of a battery of coke ovens, a blast furnace, two basic oxygen furnaces, soaking pits (steel ingot heating furnaces) and a slabbing mill. Phase 3 provided facilities for additional production capacity and a greater range of product flexibility. These facilities included one additional blast furnace, one additional basic oxygen furnace, another coke oven battery, a sinter plant, two continuous slab casters, an electrogalvanizing line, a second plate mill, a continuous heat treating line, steel ladle treatment stations, a vacuum degasser, and a hot dip galvanizing line.

Operations History

Phase 1 Operations

The first facility to be constructed at the burns Harbor Division was the 160-inch Plate Mill. This hot rolling mill began production in 1964. The 160-inch Plate Mill produces finished plate products rolled from steel slabs. Until Phase 2 operations commenced, the steel slabs used as input for this mill were produced at other plants.

The second Phase 1 facility was a Cold-Rolled Sheet Mill and Tin Mill, which began production in 1965. In 1970, a chrome plating section was added to the facility. This addition allowed the alternative plating of tin or chrome on sheet steel. The Tin Mill was later decommissioned and converted into the Electrogalvanizing Line during Phase 3. The Cold Rolled Sheet Mill is still in operation and provides for mechanical thickness reduction of hot-rolled steel bands. Until the 80-inch Hot Strip Mill became operational in 1966, the hot rolled bands used as input for the two mills were produced at other plants.

Phase 2 Operations

Phase 2 operations were designed to provide the Burns Harbor Division with primary ironmaking and steel making capabilities, thus eliminating the need for shipping semi-finished steel to the Burns Harbor Division from other plants. All Phase 2 operations commenced in 1969.

Cokemaking capabilities were initiated with the completion of Coke Oven Battery No. 1. This battery consists of 82 ovens with coal and coke handling facilities and a coal chemical by-products recovery plant. Molten iron (hot metal) production from iron ore and other raw materials commenced with the installation of one blast furnace. Blast Furnace raw materials handling facilities were also completed at this time. Steel making commenced with the installation of two basic oxygen furnaces (BOFs) at the BOF Shop. Molten steel produced at the BOF Shop is cast into ingots and allowed to solidify in ingot molds. The solidified ingots are removed from the ingot molds at the Mold Stripper and sent to the Soaking Pits for reheating to the proper slab rolling temperature. The Soaking Pits are large furnaces that heat the ingots prior to rolling at the Slabbing Mill. The ingots are rolled back and forth in the Slabbing Mill until the desired slab thickness is attained. The steel slabs are then shipped to either the Hot Strip Mill or Plate Mills for further thickness reduction.

Phase 3 Operations

Phase 3 operations were added following the initial two construction phases of the plant to provide additional production capacity, facilitate manufacture of new products, and enable implementation of new or more efficient technologies. The following provides a chronological listing of Phase 3 operations.

1975

During 1975, the first continuous slab caster at the plant began production. The slab caster produces continuous steel slab strands directly from molten steel, thus eliminating the need for ingot-making and slabbing operations for the steel processed through the caster. The addition of continuous caster operations allowed for faster, more energy-efficient production of steel at the plant. The Sinter Plant also commenced operation during 1975. The Sinter Plant produces sinter (fused iron bearing aggregate), a feed stock for the blast furnaces, from recycled materials and revert materials. Materials blended or mixed for input to the Sinter Plant include iron ore fines, coke fines, mill scale and pollution control dusts and sludges.

1978

A third BOF vessel commenced operations at the BOF Shop in 1978, increasing the steel making capacity of the Division. The 110-inch Plate Mill, a second plate-making facility, also began production in 1978. The 110-inch Plate Mill uses highly automated computer controlled rolling operations to produce plates up to 110 inches in width from steel slabs.

1983

Continuous Heat Treating Line (CHTL) operations commenced in 1983. The CHTL, one of only two such facilities in the United States, enables the more energy efficient continuous heat treating of steel strip rather than the formerly used batch coil heat treating process. Heat treating is a process by which internal stresses in the steel are relieved, producing a high strength, formable steel product.

1984

During 1984, the Electrogalvanizing Line (EGL) became operational. The EGL was constructed through the conversion of the decommissioned Tin Mill to a facility capable of electroplating various weights of zinc coatings on one or both sides of steel strip up to 48 inches in width. The product from the EGL is primarily used by the automotive industry.

1986

A second continuous slab caster began production in 1986. Together, the Burns Harbor Division's two casters are capable of casting about 80 percent of the liquid steel produced. The remaining 20 percent is teemed into ingots for processing through the Slabbing Mill. In addition, a hot metal desulfurization station was added at the BOF shop to facilitate the production of low-sulfur steel.

1987

Two ladle treatment stations were installed at the BOF Shop in 1987. These stations allow for final metallurgical treatment of liquid steel in order to meet demanding metallurgical tolerances.

1990

During 1990, a vacuum degasser began production, enabling the Division to produce ultra-low carbon steel. The vacuum degasser removes impurities in the molten steel by off-gassing under a vacuum.

1993

During 1993, a hot dip galvanizing line began production, providing the Division with the capability for the application of heavier galvanized coatings on flat rolled product. The hot dip galvanizing line uses a molten bath of zinc to coat flat rolled carbon steel strip.

1994

During 1994, a granulated coal injection facility for fueling the blast furnaces was installed. This facility commenced operations during December 1994.

U.2 OPERATIONS SHUTDOWN

Since the inception of the Burns Harbor Division, only one major facility has been decommissioned. Due to a lack of product demand, the Tin Mill was permanently closed in 1983. All solutions and materials associated with the operation were removed and recycled, disposed off-site or sent to other plants for use. Equipment, tanks and building structures were cleaned and decontaminated. After decommissioning of the Tin Mill, the facility was converted to the Electrogalvanizing Line. The original Tin Mill building and certain Tin Line equipment were utilized for the conversion.

U.3 CURRENT DIVISION CONFIGURATION

Figure U-1 provides an overall schematic process flow diagram for the Burns Harbor Division. The major elements of the current plant configuration consist of all the units constructed in Phases I, II, and III, as described above, except for the Tin Mill, which was decommissioned. Current major markets for the Division's products are the automotive, office furniture, appliance, and pipe and tube industries. Plate products are utilized by the heavy machinery, construction, farming and construction equipment, railroad car and large-diameter pipe industries.

U.4 SIC CODES

The products and services provided by the Bethlehem Steel Burns Harbor Division are described by SIC Code 3312.

FIGURE U-1

Overall Process Flow Diagram for Burns Harbor Plant

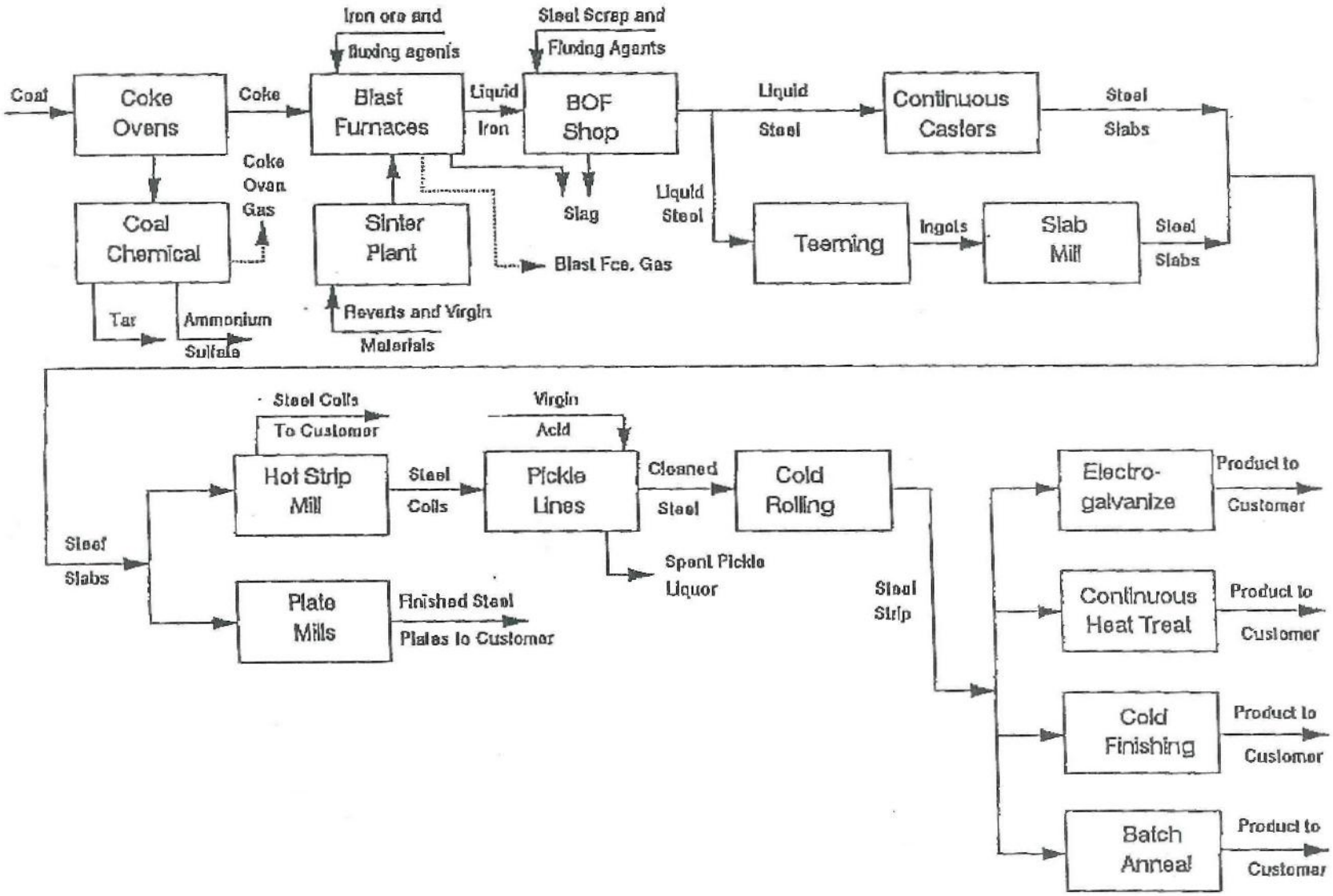

The highest permitted maximum injection pressures for the WAL wells since construction is 977 psi. The maximum injection pressure was exceeded in March 1996, when the injection pressure reached 1000 psi. Subsequently, the well was tested for mechanical integrity and subjected to ambient monitoring of the pressure in the injection zone. Mechanical integrity was demonstrated and no excess pressure buildup in the reservoir was detected.

The highest permitted injection pressure for SPL-1 since construction is 699 psi. SPL-1 injects at a rate that generally does not exceed 100 psi.

Between 1963 and 1986, SPL-1 was completed to inject into the Lower Eau Claire Formation and the entire thickness of the Mt. Simon. Following a 1986 recompletion, the well has injected only into the lower Mt. Simon Sandstone, below the "B" Cap. The lower Mt. Simon, below the "B" Cap is the injection interval requested in this permit application.

Between 1968 and 1990, WAL-1 and WAL-2 were completed to inject into the entire thickness of the Mt. Simon. Following a 1990 recompletion, the wells have injected only into the lower Mt. Simon Sandstone, below the "B" Cap. The lower Mt. Simon, below the "B" Cap is the injection interval requested in this permit application.

No releases of injectate from any of the Bethlehem Steel injection wells is known to have occurred into non-permitted intervals.

W.1 APPLICABLE WASTE CODES

SPL-1 injects hazardous waste with the listed Waste Code K062 (Spent Pickle Liquor from iron and steel production).

WAL-1 and WAL-2 inject waste ammonia liquor which is characteristically hazardous (toxic) due to selenium, benzene and pyridine concentration (Waste Codes D010, D018 and D038, respectively).

W.2 LAND DISPOSAL RESTRICTION DEADLINES

The Land Disposal Restriction deadline for waste ammonia liquor which contains selenium was May 8, 1990. The Land Disposal Restriction deadline for Spent Pickle Liquor was August 8, 1990. The ban on benzene was enacted in 1993, but no requirements have been applied to the deepwells.

The Bethlehem Steel Burns Harbor Division has an approved petition for exemption from the land disposal restrictions on hazardous waste injection under the Hazardous and Solid Waste Amendments to RCRA pursuant to the regulations set forth at 40 CFR Part 148. The exemption was effective on August 1, 1990. A petition modification in 1993 included the benzene contained in the waste ammonia liquor stream under the exemption. Bethlehem Steel continues to operate its injection wells in compliance with the exemption conditions.

W.3 WASTE MINIMIZATION

A significant proportion of the spent pickle liquor generated during the finishing of steel products is sold commercially. Only that portion that can not be sold is injected into SPL-1. Bethlehem continues to try and expand the market for its spent pickle liquor in order to minimize underground injection volumes.

Coke oven gases and waste ammonia liquor generated during the production of

coke from coal is subjected to several rounds of recycling and processing to reduce its overall volume. A principal contaminate in coke oven gas, ammonia, is largely removed from the process stream by scrubbing with sulfuric acid to form ammonia sulfate, which is crystallized, recovered and sold as a by product. Gases from the coke ovens that contain light hydrocarbon fractions are primarily burned as fuel within the plant.

Excess water is evolved from coal during the coking process. Following several recirculations through the coke oven gas cooling system, excess liquids are removed from the circulation system for further treatment, or disposal through the WAL wells.