Work Order No. 03917.008.014

No. 1 Swing Boiler, No. 2 and 3 Smelt Dissolving Tank Vent, No. 1 Lime Kiln, and No. 3 Recovery Furnace Emission Compliance Test Report

Bowater Incorporated
Catawba, South Carolina
28-30 July 2009

Prepared For

BOWATER INCORPORATED
5300 Cureton Ferry Road
Catawba, South Carolina 29704

Templeton Simpkins
Project Manager
Approved for Transmittal

Melanie Wright, Ph.D.
Quality Assurance Manager
Approved for Transmittal

Prepared By

WESTON SOLUTIONS, INC.
1625 Pumphrey Ave.
Auburn, Alabama 36832-4303
Phone: (334) 466-5600 Fax: (334) 466-5660

26 August 2009

WESTON SOLUTIONS, INC. (WESTON®)
EMISSION TESTING PRACTICE – AUBURN OPERATIONS
ACCREDITATION STIPULATION

Laboratory:	Weston Solutions, Inc.
Accreditor(s):	Louisiana Environmental Laboratory Accreditation Program (LELAP) – Laboratory and Emission Testing Practice
Accreditation ID:	LELAP – 03024
Scope:	Particulate Matter Sampling and Analysis
Effective:	LELAP – 21 December 2001
Expires:	LELAP – 30 June 2010

Note: These accreditation stipulations conform to the requirements of Georgia Rule 391-3-26-01.

Data Qualifiers

The following are general reporting notes that are applicable to all WESTON reports, unless otherwise noted.

- **NL** denotes data that was not from a LELAP accredited method.
- **LNL** denotes lab results that are not from an accredited LELAP laboratory.
- **NN** denotes data that was not from a NELAP accredited method.
- **NNL** denotes lab results that are not from an accredited NELAP laboratory.
- **ED** denotes data that is not to be used for compliance purposes and may deviate from approved procedures.
- **Q** denotes data whose QA/QC check did not fall within the specified range. This data is still considered valid.
- **A** denotes data that is anomalously high with no explanation for the outlier.
- **BDL** denotes values that were below the limit of detection of the analyzer and 2% of the span gas was used to calculate an emission rate.
- **DF** denotes a dilution factor.
- **NAP** denotes emission testing performed by personnel from a non-NELAC accredited laboratory.
- **S** denotes analysis that has been subcontracted.

TABLE OF CONTENTS

SECTION 1 INTRODUCTION 5

SECTION 2 RESULTS AND DISCUSSION 6

SECTION 3 SOURCE TESTING METHODOLOGY 11

APPENDIX A SAMPLE CALCULATIONS

APPENDIX B TEST METHODOLOGY

APPENDIX C FIELD DATA – NO. 1 SWING BOILER

APPENDIX D FIELD DATA – NOS. 2 AND 3 SMELT DISSOLVING TANK VENT

APPENDIX E FIELD DATA – NO. 1 LIME KILN

APPENDIX F FIELD DATA – NO. 3 RECOVERY FURNACE

APPENDIX G LABORATORY DATA

APPENDIX H QUALITY CONTROL DATA

APPENDIX I PROCESS OPERATING/PRODUCTION DATA

LIST OF TABLES

Table 2-1 Summary of Emission Test Results 6
Table 2-2 No. 1 Swing Boiler Summary of PM Emission Results 7
Table 2-3 Nos. 2 and 3 Smelt Dissolving Tank Vent Summary of PM and TRS Emission Results 8
Table 2-4 No. 1 Lime Kiln Summary of NO_X Emission Results 9
Table 2-5 No. 1 Lime Kiln Summary of PM, NO_X and CO Emission Results 10
Table 3-1 Source Testing Methodology 11

SECTION 1
INTRODUCTION

Weston Solutions, Inc. (WESTON®) was retained by Bowater Incorporated (Bowater) to conduct various emission testing on the No. 1 Swing Boiler (SB), Nos. 2 and 3 Smelt Dissolving Tank Vent (SDTV), No. 1 Lime Kiln (LK), and No. 3 Recovery Furnace (RF) at the mill in Catawba, South Carolina. The purpose of the emission testing was to demonstrate compliance with the South Carolina Department of Health and Environmental Control (DHEC) permit limits.

WESTON performed the emission testing on 28-30 July 2009. The project team included the following individuals.

Name	Project Role
Temp Simpkins	Project Manager/Test Team Leader
Melanie Wright	Quality Assurance Manager
Paul Green	Test Team Member
Josh Ahern	Test Team Member
Greg Mitchell	Test Team Member
Natalie Vaught	Report Coordinator

Mr. Will Hinson of Bowater coordinated the testing with mill operations and served as WESTON's technical contact throughout the effort. A representative of DHEC was not present for testing.

Table 2-1 presents the mean results of the emission testing with comparison to the permit limits for each source. The results are less than the applicable standard(s) for the source.

TABLE 2-1
SUMMARY OF EMISSION TEST RESULTS

Source/Parameter	Mean Test Results	Permit Limit
No. 1 Swing Boiler		
PM Emission Factor, lb/MMBtu	0.146	**0.6**
Nos. 2 and 3 SDTV		
PM Emission Factor, lb/tonBLS	0.084	**0.2**
TRS Emission Factor, lb/tonBLS	0.008	**0.033**
No. 2 Lime Kiln		
NO_X Concentration, ppm@10%O_2	105	**152**
No. 3 Recovery Furnace		
PM Concentration, gr/dscf@8% O_2	0.014	**0.025**
NO_X Concentration, ppm@8% O_2	49	**78**
CO Concentration, lb/hr	130	**235**

TABLE 2-2
NO. 1 SWING BOILER
SUMMARY OF PM EMISSION RESULTS

	Run 1	Run 2	Run 3	Mean
Date	7/30/09	7/30/09	7/30/09	----
Time Began	0838	1005	1131	----
Time Ended	0942	1107	1236	----
Stack Gas Data				
Temperature, °F	469	475	477	474
Velocity, ft/sec	106	105	104	105
Moisture, %	7.3	5.9	7.2	6.8
CO_2, Concentration, %	5.8	6.0	5.6	5.8
O_2 Concentration, %	13.6	13.5	13.4	13.5
VFR, x 10^5 dscfm	1.35	1.35	1.32	1.34
Particulate Matter				
Isokinetic Sampling Rate, %	102	101	102	101
Concentration, gr/dscf	0.043	0.040	0.036	0.039
Emission Rate, lb/hr	49	46	41	45
Emission Factor, lb/MMBtu	0.160	0.147	0.131	0.146

TABLE 2-3
NOS. 2 AND 3 SMELT DISSOLVING TANK VENT
SUMMARY OF PM AND TRS EMISSION RESULTS

	Run 1	Run 2	Run 3	Mean
Date	7/29/09	7/29/09	7/29/09	----
Time Began	1101	1438	1708	----
Time Ended	1243	1545	1815	----
Stack Gas Data				
Temperature, °F	171	167	166	168
Velocity, ft/sec	33	33	32	32
Moisture, %	40	37	36	38
CO_2, Concentration, %	0.0	0.0	0.0	0.0
O_2 Concentration, %	20.9	20.9	20.9	20.9
VFR, x 10^4 dscfm	2.66	2.78	2.75	2.73
Particulate Matter				
Isokinetic Sampling Rate, %	94	95	96	95
Concentration, gr/dscf	0.037	0.022	0.024	0.028
Emission Rate, lb/hr	8.4	5.4	5.8	6.5
Emission Factor, lb/tonBLS	0.070	0.046	0.049	0.055
Total Reduced Sulfur				
Concentration, ppm	4.33	4.49	3.99	4.27
Emission Rate, lb/hr	0.61	0.66	0.58	0.62
Emission Factor, lb/tonBLS	0.005	0.006	0.005	0.005

TRS times are as follows: R1 = 0914-1214; R2 = 1238-1538; R3 = 1614-1914.

TABLE 2-4
NO. 1 LIME KILN
SUMMARY OF NO_X EMISSION RESULTS

	Run 1	Run 2	Run 3	Mean
Date	7/28/09	7/28/09	7/28/09	----
Time Began	1458	1613	1722	----
Time Ended	1607	1715	1824	----
Stack Gas Data				
O_2 Concentration, %	3.1	3.0	3.7	3.3
Nitrogen Oxides				
Concentration, ppm	191	172	145	169
Concentration, ppm @ 10% O_2	117	105	92	105
Permit Limit, ppm @ 10% O_2	**----**	**----**	**----**	**152**

TABLE 2-5
NO. 3 RECOVERY FURNACE
SUMMARY OF PM, NO_X AND CO EMISSION RESULTS

	Run 1	Run 2	Run 3	Mean
Date	7/29/09	7/29/09	7/29/09	----
Time Began	1257	1435	1623	----
Time Ended	1400	1537	1726	----
Stack Gas Data				
Temperature, °F	346	342	342	344
Velocity, ft/sec	80	83	83	82
Moisture, %	24	25	25	24
CO_2, Concentration, %	13.9	13.4	13.5	13.6
O_2 Concentration, %	5.9	6.3	6.2	6.1
VFR, x 10^5 dscfm	2.07	2.11	2.13	2.10
Particulate Matter				
Isokinetic Sampling Rate, %	102	100	100	100
Concentration, gr/dscf	0.014	0.018	0.016	0.016
Emission Rate, gr/dscf@8% O_2	0.012	0.016	0.014	0.014
Permit Limit, gr/dscf@8% O_2	----	----	----	**0.025**
Nitrogen Oxides				
Concentration, ppm	54.0	56.0	59.0	56.3
Concentration, ppm @ 8% O_2	46.4	49.5	51.8	49.2
Permit Limit, ppm @ 8% O_2	----	----	----	**78**
Carbon Monoxide				
Concentration, ppm	282	97	52	144
Concentration, ppm @ 8% O_2	242	86	46	125
Emission Rate, lb/hr	254	89	48	130
Permit Limit, lb/hr	----	----	----	**235**

CEMS times were as follows: R1 = 1255-1357, R2 = 1434-1539, and R3 = 1623-1728

SECTION 3
SOURCE TESTING METHODOLOGY

The emission testing program was conducted in accordance with the U.S. EPA Reference Methods summarized in Table 3-1. Method descriptions and quality assurance data are provided in the referenced appendices.

TABLE 3-1
SOURCE TESTING METHODOLOGY

Parameter	Method Number	Appendix Reference		Comments	Data Qualifier
		Method Description	Quality Control Data		
Volumetric Flow Rate	1,2,3A,4	B.1	H		NN
Particulate Matter	5	B.2	H		NN
Total Reduced Sulfur	16	B.3	H		NN
Nitrogen Oxides	7E	B.4	H		NN
Carbon Monoxide	10	B.5	H		NN

These results meet all requirements of NELAC unless otherwise specified.

The results within this report relate only to the samples listed in the body of this report.

This report shall not be reproduced by any organization outside of Weston Solutions, Inc. except in full, without the written approval of Weston Solutions, Inc.

APPENDIX A
SAMPLE CALCULATIONS

SAMPLE CALCULATIONS

Meter Pressure (Pm), in. Hg

$$Pm = Pb + \frac{\Delta H}{13.6\ in.\ H_2O/in.\ Hg}$$

where, Pb = barometric pressure, in. Hg
ΔH = Pressure differential of orifice in. H_2O

Absolute Stack Gas Pressure (Ps), in. Hg

$$Ps = Pb + \frac{Pg}{13.6\ in.\ H_2O/in.\ Hg}$$

where, Pb = barometric pressure, in. Hg
Pg = Static Pressure, in. H_2O

Standard Meter Volume (Vmstd), dscf

$$Vmstd = \frac{17.64\ °R/in.\ Hg\ \ x\ Y\ \ x\ Vm\ \ x\ Pm}{Tm}$$

where, Y = meter correction factor
Vm = meter volume, cf
Pm = meter pressure, in. Hg
Tm = meter temperature, °R

Standard Wet Volume (Vwstd), scf

$$Vwstd = 0.04707\ ft^3/mL\ \ x\ Vlc$$

where, Vlc = volume of H_2O collected, mL

Moisture Fraction (Measured), (Bws)

$$Bws = \frac{Vwstd}{(Vwstd + Vmstd)}$$

where, Vwstd = standard wet volume, scf
Vmstd = standard meter volume, dscf

Moisture, % (M%)

$$M\% = Bws\ \ x\ 100$$

where, Bws = moisture fraction, measured or at saturation, whichever is lowest

Molecular Weight (DRY) (Md), lb/lb-mole

$$Md = (0.44 \times \% CO_2) + (0.32 \times \% O_2) + (0.28(100 - \% CO_2 - \% O_2))$$

Molecular Weight (WET) (Ms), lb/lb-mole

$$Ms = Md\ (1 - Bws) + 18(Bws)$$

where, Md = molecular weight (DRY), lb/lb-mole
Bws = moisture fraction, dimensionless

Average Velocity (Vs), ft/sec

$$Vs = 85.49 \frac{ft}{sec} \sqrt{\frac{(lb/lb\text{-}mole)(in.\ Hg)}{(°R)(in.\ H_2O)}}\ x\ Cp\ x\ \sqrt{Delta\ P}\ avg.\ x\ \sqrt{\frac{Ts}{Ps\ x\ Ms}}$$

where, Cp = pitot tube coefficient
Delta P = velocity head of stack gas, in. H_2O
Ts = absolute stack temperature, °R
Ps = absolute stack gas pressure, in. Hg
Ms = molecular weight of stack gas, lb/lb-mole

Average Stack Gas Flow at Stack Conditions (Qa), acfm

$$Qa = 60\ sec/min\ x\ Vs\ x\ As$$

where, Vs = stack gas velocity, ft/sec
As = cross-sectional area of stack, ft^2

Average Stack Gas Flow at Standard Conditions (Qs), dscfm

$$Qs = 17.64 \frac{°R}{in.\ Hg}\ x\ Qa\ x\ (1 - Bws)\ x\ \frac{Ps}{Ts}$$

where, Qa = average stack gas flow at stack conditions, ft^3/min
Bws = moisture content (dimensionless)
Ps = absolute stack gas pressure, in. Hg
Ts = absolute stack temperature, °R

Percent Isokinetic Sampling Rate (%I)

$$\%I = \frac{0.0945(in.\ Hg)(min)/(°R)(sec)\ x\ Ts\ x\ Vmstd}{Ps\ x\ Vs\ x\ An\ x\ \Theta\ x\ (1 - Bws)}$$

where, Ts = avg. stack temperature, °R
Vmstd = standard meter volume, dscf
Ps = absolute stack gas pressure, in. Hg
Vs = stack gas velocity, ft/sec
An = cross-sectional area of nozzle, ft^2
Θ = total sampling time, min
Bws = moisture content (dimensionless)

Particulate Matter Concentration at Standard Conditions (Cs), gr/dscf

$$Cs = 15.43 \frac{gr}{g} \; x \; \frac{Mn}{Vmstd}$$

where, Mn = particulate matter collected, g
Vmstd = std. meter volume, dscf

Particulate Matter Concentration Corrected for O_2, Cs @ 8% O_2

$$Cs, \frac{gr}{dscf} \; x \frac{20.9 - 8\% \, O_2}{20.9 - measured \, \% \, O_2}$$

Note: O_2 corrections are based on source category or specific sources, i.e. 10% for Lime Kilns 8 % for Recovery Boilers

Particulate Matter Emission Rate (PMR), lb/hr

$$PMR = \frac{Cs \;\; x \;\; Qs \;\; x \;\; 60 \frac{min}{hr}}{7000 \frac{gr}{lb}}$$

where, Cs = particulate conc. at std. cond., gr/dscf
Qs = avg. stack gas flow at std. cond., dscf/min

NO_x Emission Rate (EMR), lb/hr

$$EMR = \frac{conc. \, x \, Mw \, x \, Qs \, x \, 60 \frac{min}{hr} \, x \, 28.32 \frac{L}{dscf}}{24.04 \frac{L}{g - mole} \, x \, 1.0 \, x \, 10^6 \, \frac{\mu L}{L} \, x \, 454 \frac{s}{lb}}$$

APPENDIX B
TEST METHODOLOGY

B.1 VOLUMETRIC FLOW RATE

B.2 PARTICULATE MATTER

B.3 TOTAL REDUCED SULFUR

B.4 NITROGEN OXIDES

B.5 CARBON MONOXIDE

B.1 VOLUMETRIC FLOW RATE

Mass emission rates are calculated by multiplying measured target analyte concentrations by calculated volumetric flow rates. Volumetric flow rates are calculated using measurement data obtained by EPA Reference Methods 1-4.

The ductwork is measured at the sample location to the nearest 0.25 inch using a steel tape measure. Traverse points are selected in accordance with EPA Reference Method 1 on the basis of ductwork dimensions, geometry, and upstream and downstream disturbances. When a sample location does not meet EPA Reference Method 1 criteria, the maximum recommended number of traverse points is used.

Gas Velocity

The velocity of the gas stream is measured in accordance with EPA Reference Method 2 by reading the instantaneous velocity pressure with an inclined manometer at each traverse point using either a standard "P" type or an "S" type pitot tube. The stack pressure is calculated from the measured static pressure of the stack and the ambient barometric pressure. The static pressure is measured by using the static side of the pitot tube, and the barometric pressure is measured using a calibrated aneroid barometer. Magnahelic® gauges with scales of 0 to 5 and 0 to 25 inches of water or an inclined manometer with a scale of 0 to 10 inches of water are used for velocity pressure measurements. Manometer selection is determined by the velocity pressure of the gas stream. A manometer with a 0 to 0.25 inch scale may be used when the velocity pressure of the gas stream is less than 0.02 inches of water. By convention, any measured velocity pressures of less than 0.005 inches of water are recorded and reported as less than 0.005 inches of water. The stack temperature is measured with a calibrated thermocouple and pyrometer.

For low velocity pressure measurements (less than 0.005 inches of water) a hot wire anemometer may be used to measure the velocity of the gas stream. The indicated velocity is used without correction when the gas stream is ambient air with a moisture content of less than 65%. The indicated velocity is corrected in accordance with procedures specified by the manufacturer when the moisture content exceeds 65% or when the dry gas fraction is something other than ambient air.

Gas Composition and Moisture Content

The composition of the gas stream is measured in accordance with EPA Reference Method 3A using an analyzer.

Integrated samples are collected by withdrawing a sample from the source through a moisture condenser into a Tedlar® sample bag. The bag is then analyzed using a calibrated O_2/CO_2 analyzer.

The moisture content of the gas stream is determined using one of the following procedures:

- For sources requiring testing by EPA Reference or Test Methods 5, 8, 12, 13, 17, 23, 26A, 29, 0010, or 0011, moisture is determined by EPA Reference Method 4. At the conclusion of each run the volume of condensed moisture in the impingers of the sampling train is measured and used to calculate the moisture content of the gas stream.

- For sources with temperatures greater than 212 °F, the approximation technique described in EPA Reference Method 4 may be used with midget impingers to condense moisture before dry gas volume measurement.

- For sources with a temperature of less than 212 °F, wet bulb/dry bulb temperature measurements may be made, and the moisture content calculated using vapor pressure tables.

When multiple methods are used for moisture determinations, the lowest moisture value is used for volumetric flow calculations.

The molecular weight of the gas stream is calculated using the measured moisture, oxygen, and carbon dioxide concentrations. The balance of the gas stream is assumed to be nitrogen. The volumetric flow is then calculated at stack and standard conditions using the calculated molecular weight, the measured stack temperature, and measured velocity, stack and barometric pressures. Standard conditions are 68 °F and 29.92 inches of mercury and 0% moisture.

Data Acquisition and Reporting

Data are recorded at the time of collection on preprinted data sheets. Calculations are performed (where possible) with preprogrammed calculators or spreadsheet software.

Quality Control

Quality control procedures for volumetric flow measurements involve leak checks of pitot tubes, pitot tube lines and manometers; periodic analysis of ambient air and duplicate analysis of source gas samples with the Fyrite analyzer; triplicate analysis with the Orsat analyzer; and periodic calibration checks of thermocouples and pyrometers.

Data transfers are minimized. Data sheets are checked for completeness and accuracy. Calculations are verified by a second person.

B.2 PARTICULATE MATTER

Particulate matter (PM) emission testing is conducted using EPA Reference Method 5. EPA Reference Methods 1-4 are used, as appropriate, for traverse point selection, determination of stack gas molecular weight, stack gas moisture determination, and volumetric flow rate.

Sampling Equipment and Procedures

The sampling train utilized to perform the PM sampling is an EPA Reference Method 5 train manufactured by Graseby-Nutech, Graseby-Anderson, or Apex Instruments (see Figure B-1). A measured borosilicate, quartz glass, or stainless steel (316) nozzle is attached to a heated (248 ± 25 °F) borosilicate or quartz glass, or stainless steel probe of appropriate length. The probe is connected to a heated (248 ± 25 °F) borosilicate glass filter holder containing a 9-cm glass fiber filter (preweighed to a constant 0.1 mg weight). The first and second impingers each contain 100 mL of distilled water, the third impinger is empty, and the fourth impinger contains 200 to 300 grams of dry preweighed silica gel. The second impinger is a standard Greenburg-Smith type. The first, third, and fourth impingers are of a modified design. All impingers are maintained in a crushed ice bath. A gas measuring control console with a leak-free vacuum pump, a calibrated dry gas meter, a calibrated orifice, and inclined manometers are connected to the final impinger, probe, heated filter holder, and pitot tube via an umbilical cord to complete the train.

Flue gas velocity is measured with a calibrated S-type pitot tube (provided with extensions) fastened alongside the sampling nozzle. Flue gas temperature is monitored with a calibrated direct readout pyrometer equipped with a chromel-alumel (Type K) thermocouple positioned near the sampling nozzle. The probe, filter box, and impinger exit gas temperatures are monitored with a calibrated direct readout pyrometer equipped with Type K thermocouples positioned in the probe, heated filter chamber, and in the sample gas stream after the last impinger. Stack gas stream composition (carbon dioxide and oxygen content) is determined as previously described. The sampling rate is adjusted, based on stack velocity, at each point to ensure the sample is collected isokinetically.

At the conclusion of each test, the sampling train is leak checked. Upon completion of a successful leak check, the sampling train is dismantled, openings are sealed, and the components recovered as described below.

- The glass fiber filter(s) is/are removed from its holder with tweezers and placed in its original container, along with any particulate and filter fragments (Sample Fraction 1).

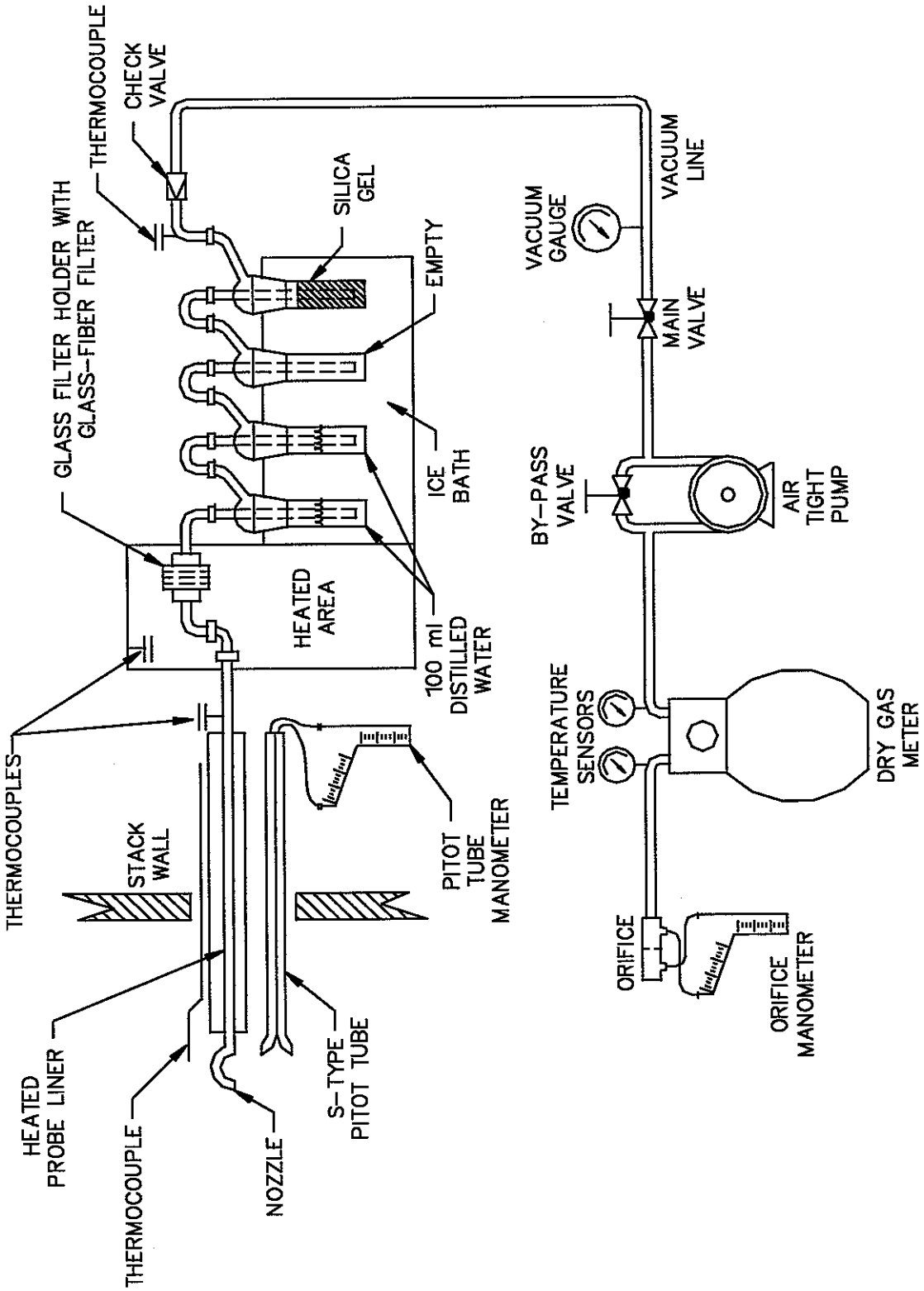

Figure B-1 EPA Reference Method 5 Sampling Train

- The probe and nozzle are separated and the particulate rinsed with distilled water or acetone into a polyethylene container while brushing a minimum of three times. Particulate adhering to the brush is rinsed with the appropriate solvent into the same container. The front half of the filter holder and connecting glassware are also rinsed. These rinses are combined (Sample Fraction 2).

- The total liquid content of impingers one, two, and three are measured volumetrically for stack gas moisture content calculation. This liquid is discarded.

- The silica gel is removed from the last impinger and immediately weighed to the nearest 0.1 g for stack gas moisture content calculation.

- Aliquots of the appropriate solvents and a filter are retained for blank analyses.

Each sample bottle is labeled to clearly identify its contents. The liquid level is marked on each bottle. The samples are then secured for transport to a laboratory for analysis. Sample integrity is assured by maintaining chain-of-custody records.

Sample Analysis

The particulate analysis proceeds as follows:

- The sample filters (Sample Fraction 1) and blank filter are desiccated for 24 hours and weighed to the nearest 0.1 mg to constant (± 0.5 mg) weight.

- The nozzle, probe, and front half of the filter holder wash samples (Sample Fraction 2), along with the solvent blank, are evaporated in tared beakers, then desiccated and weighed to the nearest 0.1 mg to constant (± 0.5 mg) weights.

The total weight of material measured in the front half wash in addition to the weight of material collected on the glass fiber filter represent the total PM catch for each train. Blank corrections are made where appropriate for all sample weights.

Data Acquisition and Reduction

Data are recorded at the time of collection on preprinted data sheets. Calculations are performed with preprogrammed calculators or spreadsheet software. Data transfers are minimized. Field and laboratory data sheets are be checked for completeness and accuracy. Calculations are verified by a second person.

Quality Control

Dry gas meters are calibrated before and after sampling. Thermocouples are calibrated against mercury thermometers, and aneroid barometers are calibrated against a mercury barometer. WESTON participated satisfactorily in the most recent dry gas meter audit supplied by the EPA. Those data are on file at WESTON.

Prior to and following each run, the sampling train is leak checked. An acceptable leak rate does not exceed the lesser of 0.02 actual cubic feet per minute (acfm) or 4% of the actual sampling rate. The isokinetic sampling rate is calculated at the completion of each sample run. If the isokinetic sampling rate is not within 100% ± 10%, the sample run is repeated.

Samples are transported to the laboratory under chain-of-custody. Solvent blanks and filter blanks are analyzed at the same time as the samples. The mass collected on the filters and the mass in the probe wash are corrected by the blank measurements.

WESTON uses Class S weights during each stage of the analysis to verify the accuracy of the balance. The balance is repaired and recalibrated before proceeding if there is a significant difference in the actual mass and measured mass.

B.3 TOTAL REDUCED SULFUR

Total reduced sulfur testing is performed using the procedures described in EPA Reference Method 16. When TRS data must be oxygen corrected, EPA Reference Method 3 using an Orsat analyzer, is performed on an integrated bag sample to measure oxygen concentration.

Sampling Equipment and Procedures

Figure B-2 illustrates the sampling system. A Teflon®-lined, stainless steel probe of sufficient length to monitor the gas stream (without wall effects) is used to extract a gas sample from the emission source. The probe tip is directed away from stack gas flow to minimize particulate and moisture entrainment. The probe is connected directly to the recovery gas line and sample conditioning system.

The sample conditioning system consists of a Teflon® impinger containing 1.5M citrate buffer, adjusted to a pH of 5.4 to 5.8, maintained in an ice bath. Moisture is condensed in the impingers, yielding a dry sample and thus eliminating the need for heated sample lines. Even though the impinger set traps entrained particulate matter, very fine particulate matter is removed by a Balston® AQ Microfiber filter installed at the impinger outlet.

An unheated nylon line is connected from the filter to the sample pump inlet. Sample line length and connections are minimized to reduce surface adsorption of TRS and the possibility of leaks.

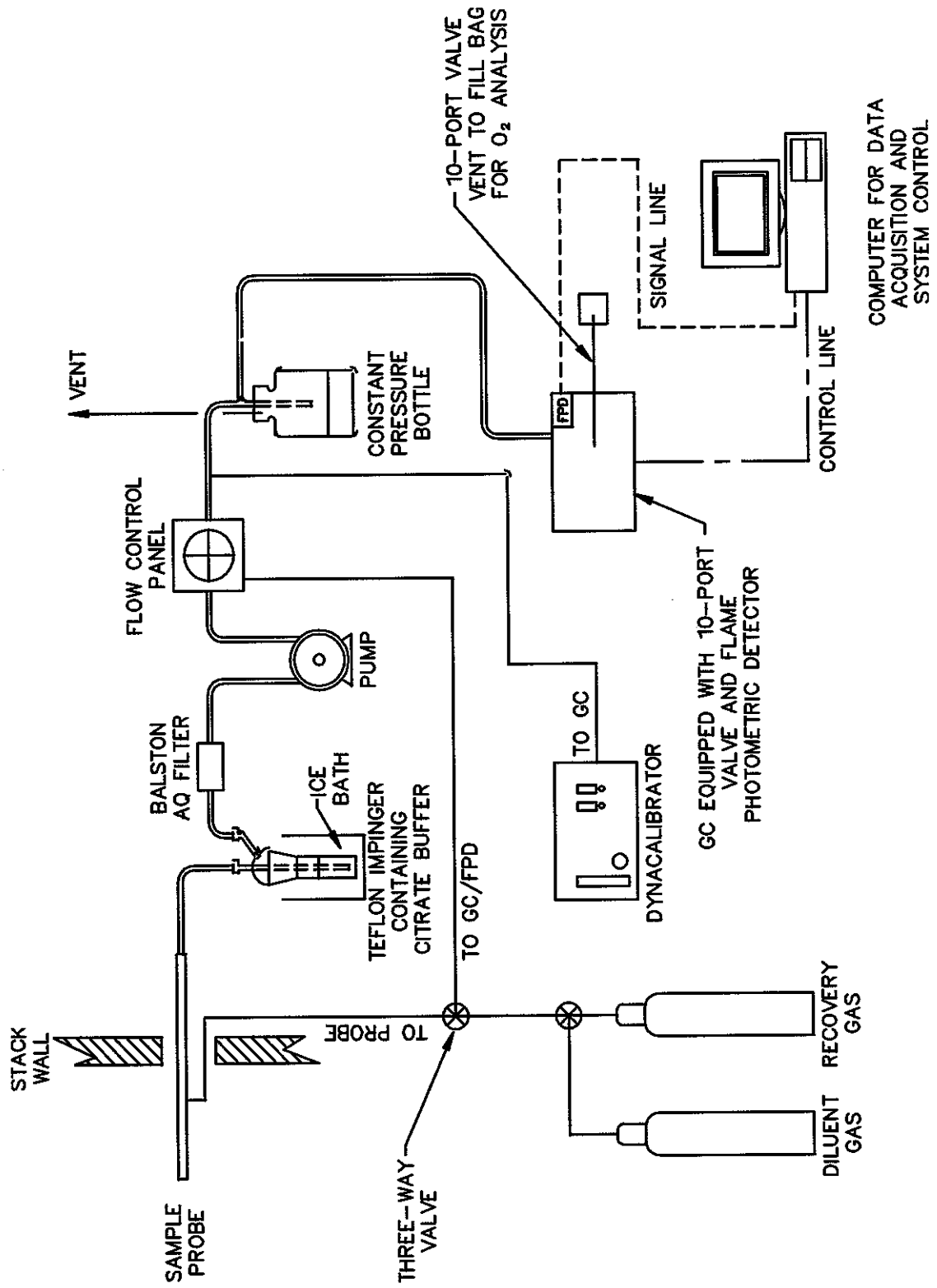

Figure B-2 EPA Reference Method 16 Sampling and Analytical Train

The pump outlet is connected directly to a constant pressure bottle. At this point, a major portion of the sample is vented to the atmosphere, and the remainder is used to charge the gas chromatograph (GC) sample loop. The GC sample loop outlet is connected to a Tedlar® gas collection bag gas sample collection and subsequent analysis using an Orsat apparatus.

Sample Analysis

Separation of hydrogen sulfide (H_2S), methyl mercaptan (MeSH), dimethyl sulfide (DMS), and dimethyl disulfide (DMDS) is accomplished by gas chromatography on a SPB1 Capillary column. After resolution of H_2S, MeSH, and DMS, the Capillary column is backflushed to achieve resolution of DMDS within 2-3 minutes from sample injection. The gas chromatograph is operated on periodic cycle to produce a minimum of ten injections per hour.

Detection of reduced sulfur compounds is accomplished with a flame photometric detector (FPD). The FPD response is calibrated before and after every three hours of testing, using gas phase standards prepared from gravimetrically certified permeation devices.

Data Acquisition and Reduction

The FPD responses are recorded by an IBM compatible computer equipped with software designed by WESTON for reduced sulfur compound analysis. The software controls the timing of the gas-chromatographic cycle, integrates and records peaks, performs calculations, and prints the results. Calibration curves are generated by the software using log-log linear least squares best fit of the data.

Quality Control

Permeation devices certified by the vendor are used to calibrate the FPD response. The temperature of the devices is maintained at a constant value (as certified by vendor) to ensure a constant, accurate permeation rate. The temperature of the permeation chamber is verified at the time of sampling with an National Institute of Standards and Technology (NIST) traceable mercury-in-glass thermometer. The temperature of the permeation chamber is maintained at 50.0 $\pm$ 0.1 °C throughout the sampling.

VICI-Metronics, Santa Clara, California, supplied the permeation devices for the testing. The devices are gravimetrically analyzed to measure the emission rate before shipment.

Various concentrations of the permeants are generated by varying the flow of the diluent gas stream over the devices. A calibration curve is constructed of at least three concentrations of each permeant; three successive injections at each concentration yield peak areas that differ from the mean peak area value by less than 5%.

Sampling system integrity is evaluated after every three hours of sampling by injecting a low concentration of H_2S at the probe tip and recovering the sample through the sample conditioning and sample transport subsystems. The same gas stream is then introduced directly to the GC sample loop. The ratio of concentrations corresponds to the system correction factor. This factor is then used to adjust measured reduced sulfur compound concentrations.

A system audit gas (of appropriate H_2S concentration) is used to evaluate the analytical system integrity each test day. Audit gas results will be within 10% of the certified cylinder concentration.

B.4 NITROGEN OXIDES (INSTRUMENTAL)

Nitrogen oxides (NO_x) testing on some sources may be conducted in accordance with EPA Reference Method 7E.

Sampling Equipment and Procedures

Figure B-3 illustrates the sampling system. The sample is withdrawn from the source through a heated probe, filter, and sample line to a sample conditioner, which removes moisture from the gas stream. The sample is then transported to a California Analytical Model 400-CLD Analyzer through a Teflon® line.

Sample Analysis

The analyzer uses an oxidizing converter to produce nitric oxide (NO) molecules. A chemiluminescent reaction of NO and ozone is then used to produce nitrogen dioxide (NO_2), oxygen (O_2), and infrared light. This infrared light is measured using a highly sensitive optical filter/photomultiplier whose output is linearly proportional to the NO concentration.

Data Acquisition and Reduction

Data are acquired electronically using an IBM compatible computer and software designed by WESTON for EPA Reference Method 7E analysis. This system generates a calibration curve, converts electronic signals into concentrations, and provides bias-corrected hourly averages.

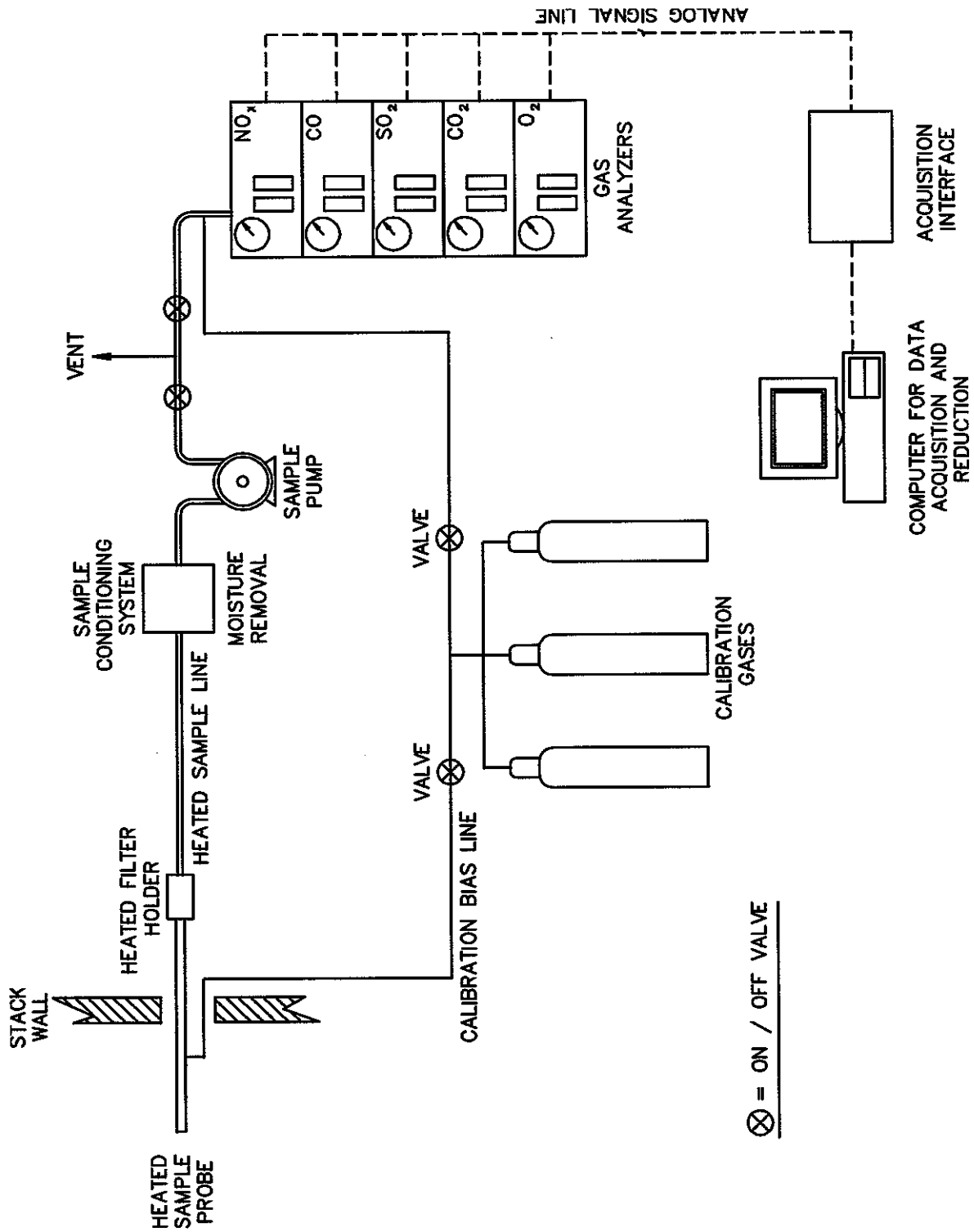

Figure B-3 EPA Reference Method 6C Sampling Train

Quality Control

At the time of analysis, NO in nitrogen calibration gases, certified according to EPA Protocol-1, are used to calibrate the analyzer and to determine a bias correction factor for the entire system. Calibration and system response is performed in accordance with EPA Reference Method 7E.

Calibration gases are introduced directly to the analyzer to generate the calibration curve. A calibration gas is introduced at the probe and recovered through the sampling and analytical system. A bias correction factor is calculated using the ratio of the measured concentration of the bias gas and concentration certified by the vendor. An interference response study was performed by the manufacturer of the analyzer. The data from this study are on file at WESTON.

B.5 CARBON MONOXIDE

Carbon monoxide testing is conducted in accordance with EPA Reference Method 10.

Sampling Equipment and Procedures

Figure B-3 illustrates the sampling system. Sampling is performed by extraction of an integrated stack gas sample collected in a Tedlar® bag, or by continuous sample extraction and analysis. For both sampling procedures the sample is withdrawn from the stack, through a conditioning system for moisture removal, using a leak-tight sample pump. The dry gas sample is then collected at the outlet of the sample pump using a Tedlar® bag or transported through sample lines to the analyzer for continuous on-line monitoring.

Sample Analysis

The California Analytical Model 300 CO Non-Dispersive Infrared (NDIR) analyzer uses gas filter correlation spectroscopy to measure the amount of CO present in the sample. Infrared radiation is chopped and passed through an alternating CO and N_2 correlation filter wheel and the sample stream. Carbon monoxide in the sample absorbs the infrared radiation, leaving the remaining radiation to be measured by a detector producing a linear output signal.

Data Acquisition and Reduction

Data are acquired electronically using an IBM compatible computer and software designed by WESTON for EPA Reference Method 10 analysis or alternatively the analyzer analog signal is recorded using a strip-chart recorder.

For data collection using a computer and acquisition interface, the software generates a calibration curve and continuous calculation of sample concentration. All subsequent calculation procedures required for compliance with EPA Reference Method 10 are performed electronically.

For data collection using a strip chart recorder, the calibration curve and subsequent calibration procedures are performed manually or by using pre-programmed calculators.

Quality Control

At the time of analysis, certified CO in nitrogen calibration gases are used to calibrate the analyzer. Calibration is performed in accordance with EPA Reference Method 10.

A CO_2 interference response study was performed by the manufacturer of the analyzer. The data from this study are on file at WESTON.

APPENDIX C
FIELD DATA – NO. 1 SWING BOILER

Bowater
Catawba, South Carolina

03917.008.014
No. 1 Swing Boiler

ISOKINETIC CALCULATIONS

		1	2	3	Mean
Run Number		1	2	3	Mean
Date		7/30/2009	7/30/09	7/30/09	---
Time Began		838	1005	1131	---
Time Ended		942	1107	1236	---
INPUT DATA					
Sampling Time, min	(Theta)	60	60	60	60
Stack Diameter, in.	(Dia.)	87.00	87.00	87.00	87.00
Barometric Pressure, in. Hg	(Pb)	29.21	29.21	29.21	29.21
Static Pressure, in. H2O	(Pg)	0.41	0.41	0.41	0.41
Pitot Tube Coefficient	(Cp)	0.84	0.84	0.84	0.84
Meter Correction Factor	(Y)	0.9960	0.9960	0.9960	0.9960
Orifice Calibration Value	(Delta H@)	1.9320	1.9320	1.9320	1.9320
Nozzle Diameter, in.	(Dn)	0.185	0.185	0.185	0.185
Meter Volume, ft^3	(Vm)	39.570	39.818	39.471	39.620
Meter Temperature, °F	(Tm)	89.5	94.7	95.4	93.2
Meter Temperature, °R	(Tm-R)	549.5	554.7	555.4	553.2
Meter Orifice Pressure, in. H2O	(Delta H)	1.392	1.363	1.332	1.362
Ave Sq Rt Orifice Press, (in. H2O)^½	((Delta H)½)avg)	1.179	1.166	1.150	1.165
Volume H2O Collected, mL	(Vlc)	61.9	49.0	60.0	57.0
CO2 Concentration, %	(CO2)	5.8	6.0	5.6	5.8
O2 Concentration, %	(O2)	13.6	13.5	13.4	13.5
Ave Sq Rt Velo Head, (in. H2O)^½	((Delta P)½)avg)	1.395	1.390	1.376	1.387
Stack Temperature, °F	(Ts)	469.4	474.8	476.3	473.5
Stack Temperature, °R	(Ts-R)	929.4	934.8	936.3	933.5
Particulate Collected, g	(Mn)	0.1025	0.0949	0.0851	0.0942
Moisture Fraction (at Saturation)	(BWS)	NA	NA	NA	NA
O2 F-Factor, dscf/MMBtu	(Fd)	9190	9190	9190	9190
CALCULATED DATA					
Nozzle Area, ft^2	(An)	1.87E-04	1.87E-04	1.87E-04	1.87E-04
Stack Area, ft^2	(As)	41.28	41.28	41.28	41.28
Stack Pressure, in. Hg	(Ps)	29.24	29.24	29.24	29.24
Meter Pressure, in. Hg	(Pm)	29.31	29.31	29.31	29.31
Standard Meter Volume, ft^3	(Vmstd)	37.086	36.966	36.594	36.882
Standard Water Volume, ft^3	(Vwstd)	2.914	2.306	2.824	2.681
Moisture Fraction (Measured)	(BWS)	0.073	0.059	0.072	0.068
Moisture Fraction (lower sat/meas)	(BWS)	0.073	0.059	0.072	0.068
Mol. Wt. of Dry Gas, lb/lb-mole	(Md)	29.47	29.50	29.43	29.47
Mol. Wt. of Stack Gas, lb/lb-mole	(Ms)	28.64	28.82	28.61	28.69
Average Stack Gas Velocity, ft/sec	(Vs)	105.54	105.12	104.49	105.05
Stack Gas Flow, actual, ft^3/min	(Qa)	261420	260384	258827	260210
Stack Gas Flow, Std , ft^3/min	(Qs)	134514	135235	132369	134039
Isokinetic Sampling Rate, %	(%I)	101.6	100.8	101.9	101.4
Particulate Conc @ Std Cond, gr/ft^3	(Cs)	0.0426	0.0396	0.0359	0.0394
Particulate Emission, lb/hr	(PMR)	49.2	45.9	40.7	45.3
Particulate Emission Factor, lb/MMBtu	(Fd)	0.1603	0.1469	0.1313	0.1462
Calibration check	(Yqa)	0.9866	0.9738	0.9707	0.977
Percent difference from Y					-1.90%

ISOKINETIC FIELD DATA SHEET

Method 5

Page 1 of 1

			Stack Conditions									
Client	Bowater		Assumed	Actual	Meter Box ID	A024			K Factor	.72		
W.O.#	03917.008.014				Meter Box Y	0.996						
Project ID	N/A	% Moisture	6		Meter Box Del H	1.932		Leak Checks	Initial	Mid-Point	Final
Mode/Source ID	N/A	Impinger Vol (ml)		52	Probe ID / Length	AUB PR70 7'		Sample Train (ft³)	0.012		0.010
Samp. Loc. ID	Catawba, Sc	Silica gel (g)		9.9	Probe Material	SS		Leak Check @ (in Hg)	10"		10"
Run No.ID	1	CO2, % by Vol		5.8	Pitot / Thermocouple ID			Pitot good	yes / no	yes / no	yes / no
Test Method ID	M5	O2, % by Vol		13.6	Pitot Coefficient	0.84		Orsat good	yes / no	yes / no	yes / no
Filter No.	DAO 850	Temperature (°F)			Nozzle ID	0.185		Temp Check	Pre-Test Set		Post-Test Set
Source/Location	No. 1 Powerboiler Swing Boiler	Meter Temp (°F)	85		Avg Nozzle Dia (in)	0.185		Meter Box Temp			
Sample Date	30-Jul-09	Static Press (in H_2O)		+0.41	Area of Stack (ft²)	41.28		Reference Temp			
Baro. Press (in Hg)	29.21				Sample Time	60		Pass/Fail (+/- 2°)	Pass / Fail		Pass / Fail
Operator	[illegible]	Ambient Temp (°F)			Total Traverse Pts	24		Temp Change Response ?	yes / no		yes / no

TRAVERSE POINT NO	SAMPLE TIME (min)	CLOCK TIME (plant time)	VELOCITY PRESSURE Delta P (in H2O)	ORIFICE PRESSURE Delta H (in H2O)	DRY GAS METER READING (ft³)	STACK TEMP (°F)	DGM INLET TEMP (°F)	DGM OUTLET TEMP (°F)	PROBE TEMP (°F)	FILTER BOX TEMP (°F)	IMPINGER EXIT TEMP (°F)	SAMPLE TRAIN VAC (in Hg)		COMMENTS
	0	838			374.300									
A-1	2.5		1.9	1.4	375.9	457	79	*	241	253	67	3		
2	5		1.9	1.4	377.5	460	80		242	252	63	3		
3	7.5		1.9	1.4	379.3	462	82		243	253	63	3		
4	10		2.0	1.4	380.8	468	84		244	254	62	3		
5	12.5		2.0	1.4	382.3	469	85		245	255	56	3		
6	15		2.0	1.4	383.8	470	86		246	256	55	3		
7	17.5		2.1	1.5	385.8	470	87		248	256	55	3		
8	20		2.1	1.5	387.793	470	88		249	258	55	3		
B-1	22.5		2.0	1.4	389.2	470	89		250	261	62	3		
2	25		2.0	1.4	390.8	469	90		251	262	55	3		
3	27.5		1.9	1.4	392.4	470	90		254	263	56	3		
4	30		1.9	1.4	394.1	471	91		255	263	57	3		
5	32.5		2.0	1.4	395.7	471	92		256	264	57	4		
6	35		2.1	1.5	397.4	471	93		257	264	58	4		
7	37.5		2.1	1.5	399.1	471	93		262	265	59	4		
8	40		2.1	1.5	400.872	476	93		262	267	60	4		
C-1	42.5	Pm	1.4	1.0	402.3	468	92		265	267	59	3		
2	45		1.7	1.2	403.8	470	93		265	268	59	3		
3	47.5		1.8	1.3	405.5	471	93		265	268	59	3		
4	50		1.9	1.4	407.3	471	93		265	267	59	3		
5	52.5		2.0	1.4	408.8	471	94		268	267	60	3		
6	55		2.0	1.4	410.5	473	94		269	267	61	4		
7	57.5		2.0	1.4	412.2	473	94		268	268	61	4		
8	60	942	2.0	1.4	413.870	473	94		268	269	61	4		
			Avg Sqrt Delta P	Avg Delta H	Total Volume	Avg Ts	Avg Tm		Min/Max	Min/Max	Max Temp	Max Vac	Max Temp	
			1.3953	1.3917	39.570	469.4	89.5							
				Avg Sqrt Del H	Comments:									
				1.1788										

WESTON MANAGERS DESIGNERS/CONSULTANTS

15B

ISOKINETIC FIELD DATA SHEET

Method 5

Page 1 of 1

Client	Bowater
W.O.#	03917.008.014
Project ID	N/A
Mode/Source ID	N/A
Samp. Loc. ID	Catawba, Sc
Run No.ID	2
Test Method ID	M5
Filter No.	DAO 851
Source/Location	No. 1 Powerboiler Swing Boiler
Sample Date	30-Jul-09
Baro. Press (in Hg)	29.21
Operator	Reg.

Stack Conditions	Assumed	Actual
% Moisture	7	
Impinger Vol (ml)		44.0
Silica gel (g)		5.0
CO2, % by Vol		6.0
O2, % by Vol		13.5
Temperature (°F)		
Meter Temp (°F)		
Static Press (in H_2O)		+0.41
Ambient Temp (°F)		

Meter Box ID	A024
Meter Box Y	0.996
Meter Box Del H	1.932
Probe ID / Length	AH8 FR 7D 7'
Probe Material	SS
Pitot / Thermocouple ID	
Pitot Coefficient	0.84
Nozzle ID	0.185
Avg Nozzle Dia (in)	0.185
Area of Stack (ft²)	41.28
Sample Time	60
Total Traverse Pts	24

K Factor .71

Leak Checks	Initial	Mid-Point	Final
Sample Train (ft³)	0.006		0.002
Leak Check @ (in Hg)	10"		3"
Pitot good	yes / no	yes / no	yes / no
Orsat good	yes / no	yes / no	yes / no

Temp Check	Pre-Test Set	Post-Test Set
Meter Box Temp		
Reference Temp		
Pass/Fail (+/- 2°)	Pass / Fail	Pass / Fail
Temp Change Response ?	yes / no	yes / no

TRAVERSE POINT NO.	SAMPLE TIME (min)	CLOCK TIME (plant time)	VELOCITY PRESSURE Delta P (in H2O)	ORIFICE PRESSURE Delta H (in H2O)	DRY GAS METER READING (ft³)	STACK TEMP (°F)	DGM INLET TEMP (°F)	DGM OUTLET TEMP (°F)	PROBE TEMP (°F)	FILTER BOX TEMP (°F)	IMPINGER EXIT TEMP (°F)	SAMPLE TRAIN VAC (in Hg)		COMMENTS
	0	1005			414.000									
A-1	2.5		1.9	1.3	416.1	474	94	*	233	241	67	3		
2	5		1.9	1.3	417.3	472	94		234	245	67	3		
3	7.5		2.0	1.4	418.8	473	94		236	246	64	3		
4	10		2.0	1.4	420.5	473	94		245	251	63	3		
5	12.5		2.0	1.4	422.2	480	95		245	251	62	3		
6	15		2.1	1.5	424.0	473	94		250	262	62	3		
7	17.5		2.1	1.5	426.0	474	94		250	263	63	3		
8	20		2.1	1.5	427.350	474	94		252	263	63	3		
B-1	22.5		1.8	1.3	429.0	480	94		253	264	65	3		
2	25		1.8	1.3	430.0	473	95		253	265	65	3		
3	27.5		1.8	1.3	432.1	474	95		254	265	63	3		
4	30		2.0	1.4	433.9	474	95		254	265	63	3		
5	32.5		1.9	1.3	435.6	475	95		264	263	62	3		
6	35		2.1	1.5	437.3	480	95		265	264	62	3		
7	37.5		2.0	1.4	439.0	484	95		267	265	63	3		
8	40		2.0	1.4	440.688	476	95		267	265	63	3		
C-1	42.5		1.3	.92	442.1	474	95		266	267	65	3		
2	45		1.6	1.1	443.6	473	95		267	268	63	3		
3	47.5		2.0	1.4	445.4	473	95		265	268	62	3		
4	50		2.1	1.5	447.0	473	95		264	268	62	3		
5	52.5		2.0	1.4	448.7	474	95		264	267	62	3		
6	55		2.0	1.4	450.4	474	95		264	267	63	3		
7	57.5		2.0	1.4	452.3	473	95		265	267	63	3		
8	60	1107	2.0	1.4	453.818	473	95		266	268	63	3		
			Avg Sqrt Delta P 1.3903	Avg Delta H 1.3633	Total Volume 39.818	Avg Ts 474.8	Avg Tm 94.7		Min/Max	Min/Max	Max Temp	Max Vac	Max Temp	

Avg Sqrt Del H 1.1662

Comments:

WESTON MANAGERS DESIGNERS/CONSULTANTS

ISOKINETIC FIELD DATA SHEET

Method 5

Page 1 of 1

			Stack Conditions Assumed	Stack Conditions Actual				
Client	Bowater				Meter Box ID	A024		
W.O.#	03917.008.014				Meter Box Y	0.996		
Project ID	N/A	% Moisture			Meter Box Del H	1.932	**Leak Checks**	Initial / Mid-Point / Final
Mode/Source ID	N/A	Impinger Vol (ml)		54	Probe ID / Length	7'	Sample Train (ft³)	0.014 / / 0.003
Samp. Loc. ID	Catawba, Sc	Silica gel (g)		6.0	Probe Material	SS	Leak Check @ (in Hg)	8" / / 4
Run No.ID	3	CO2, % by Vol		5.6	Pitot / Thermocouple ID		Pitot good	yes / no / yes / no / yes / no
Test Method ID	M5	O2, % by Vol		13.4	Pitot Coefficient	0.84	Orsat good	yes / no / yes / no / yes / no
Filter No.	DAO 852	Temperature (°F)			Nozzle ID	0.185	**Temp Check**	Pre-Test Set / Post-Test Set
Source/Location	No. 1 Powerboiler	Meter Temp (°F)			Avg Nozzle Dia (in)	0.185	Meter Box Temp	
Sample Date	30-Jul-09 Swing Boiler NW 8/25	Static Press (in H_2O)		+0.41	Area of Stack (ft²)	41.28	Reference Temp	
Baro. Press (in Hg)	29.21				Sample Time	60	Pass/Fail (+/- 2°)	Pass / Fail / Pass / Fail
Operator	PBO	Ambient Temp (°F)			Total Traverse Pts	24	Temp Change Response ?	yes / no / yes / no

K Factor .70

TRAVERSE POINT NO.	SAMPLE TIME (min)	CLOCK TIME (plant time)	VELOCITY PRESSURE Delta P (in H2O)	ORIFICE PRESSURE Delta H (in H2O)	DRY GAS METER READING (ft³)	STACK TEMP (°F)	DGM INLET TEMP (°F)	DGM OUTLET TEMP (°F)	PROBE TEMP (°F)	FILTER BOX TEMP (°F)	IMPINGER EXIT TEMP (°F)	SAMPLE TRAIN VAC (in Hg)		COMMENTS
	0	1131			454.100									
A-1	2.5		1.7	1.2	455.6	472	94		230	265	67	3		
2	5		2.0	1.4	457.3	473	94		265	263	66	3		
3	7.5		1.9	1.3	458.9	474	95		258	264	65	3		
4	10		1.9	1.3	460.6	475	95		260	265	63	3		
5	12.5		2.0	1.4	462.2	476	96		260	265	62	3		
6	15		2.1	1.5	463.9	474	95		262	265	62	3		
7	17.5		2.1	1.5	465.6	474	95		262	264	62	3		
8	20		2.1	1.5	467.460	479	95		262	263	64	3		
B-1	22.5		1.7	1.2	469.1	478	95		260	260	62	3		
2	25		1.9	1.3	470.7	478	95		261	264	60	3		
3	27.5		2.0	1.4	472.5	478	95		262	265	60	3		
4	30		2.0	1.4	474.1	476	95		263	266	59	3		
5	32.5		2.0	1.4	475.7	474	95		263	266	59	3		
6	35		2.1	1.5	477.5	475	95		264	267	59	3		
7	37.5		2.0	1.4	479.2	482	96		264	267	59	3		
8	40		2.0	1.4	480.910	481	96		265	267	59	3		
C-1	42.5		.80	.56	482.0	481	95		265	267	59	3		
2	45		1.6	1.1	483.5	479	95		265	267	54	3		
3	47.5		1.9	1.3	485.2	474	95		266	268	54	3		
4	50		1.9	1.3	486.9	475	96		268	269	54	3		
5	52.5		2.0	1.4	488.57	475	96		267	268	56	3		
6	55		2.0	1.4	490.3	475	97		267	267	57	3		
7	57.5		2.0	1.4	491.9	476	97		266	267	57	3		
8	60	1236	2.0	1.4	493.571	476	97		265	268	57	3		
			Avg Sqrt Delta P 1.3755	Avg Delta H 1.3317	Total Volume 39.471	Avg Ts 476.3	Avg Tm 95.4		Min/Max	Min/Max	Max Temp	Max Vac	Max Temp	

Avg Sqrt Del H 1.1501

Comments:

WESTON MANAGERS DESIGNERS/CONSULTANTS

153

SAMPLE RECOVERY FIELD DATA

Method 5

Client: Bowater
Location/Plant: Catawba, Sc
W.O. #: 03917.008.014
Source & Location: No. 1 ~~Powerboiler~~ Swing Boiler NV 8/25

Run No. 1
Sample Date: ~~5/13/2009~~ 7/30/09 PKL
Recovery Date: ~~5/13/2009~~ 7/30/09
Sample I.D.:
Analyst: PSD
Filter Number: DA0850

	Impinger									
	1	2	3	4	5	6	7	Imp.Total	8	Total
Contents	H20	H2O	Empty						Silica Gel	
Final	150	102	0						338.2	
Initial	100	100	0						328.3	
Gain	50	2	0					52	9.9	61.9

Impinger Color: Clear
Labeled? ✓
Silica Gel Condition: Good
Sealed? ✓

Run No. 2
Sample Date: ~~5/13/2009~~ 7/30/09 PKL
Recovery Date: ~~5/13/2009~~ 7/30/09
Sample I.D.:
Analyst: PKD
Filter Number: DA0851

	Impinger									
	1	2	3	4	5	6	7	Imp.Total	8	Total
Contents	H2O	H2O	Empty						Silica Gel	
Final	138	106	0						351.3	
Initial	100	100	0						346.3	
Gain	38	6	0					44	5.0	49.0

Impinger Color: Clear
Labeled? ✓
Silica Gel Condition: Good
Sealed? ✓

Run No. 3
Sample Date: ~~5/13/2009~~ 7/30/09
Recovery Date: ~~5/13/2009~~ 7/30/09
Sample I.D.:
Analyst: PSD
Filter Number: DA0852

	Impinger									
	1	2	3	4	5	6	7	Imp.Total	8	Total
Contents	H2O	H2O	Empty						Silica Gel	
Final	148	104	2						358.6	
Initial	100	100	0						352.6	
Gain	48	4	2					54	6.0	60

Impinger Color: Clear
Labeled? ✓
Silica Gel Condition: Good
Sealed? ✓

Check COC for Sample IDs of Media Blanks

WESTON MANAGERS DESIGNERS/CONSULTANTS

RUN DATA

Number 1

Client:	**Bowater**	Project Number:	**03917.008.014**
Location:	**Catawba, SC**	Operator:	**J. Ahern**
Source:	**No. 1 Swing Boiler**	Date:	**30 Jul 2009**
Calibration:	**1**		

Time	O2 %	CO2 %
Starting time 11:17		
11:17:44	13.6	5.7
11:17:59	13.6	5.7
11:18:14	13.6	5.8
11:18:29	13.6	5.9
11:18:44	13.6	5.7
11:18:59	13.6	5.7
11:19:14	13.6	5.7
11:19:29	13.6	5.7
11:19:44	13.6	5.9
Run Avg	**13.6**	**5.8**

RUN DATA

Number 2

Client:	**Bowater**	Project Number:	**03917.008.014**
Location:	**Catawba, SC**	Operator:	**J. Ahern**
Source:	**No. 1 Swing Boiler**	Date:	**30 Jul 2009**
Calibration:	**1**		

Time	O2 %	CO2 %
Starting time 11:21		
11:21:21	13.5	6.0
11:21:36	13.5	6.1
11:21:51	13.5	6.2
11:22:06	13.5	6.0
11:22:21	13.5	5.9
11:22:36	13.5	5.9
11:22:51	13.5	5.9
11:23:06	13.5	6.1
Run Avg	**13.5**	**6.0**

RUN DATA

Number 3

Client:	**Bowater**	Project Number:	**03917.008.014**
Location:	**Catawba, SC**	Operator:	**J. Ahern**
Source:	**No. 1 Swing Boiler**	Date:	**30 Jul 2009**
Calibration:	**1**		

Time	O2 %	CO2 %
Starting time 12:40		
12:40:50	13.5	5.6
12:41:05	13.4	5.6
12:41:20	13.4	5.6
12:41:35	13.4	5.7
12:41:50	13.4	5.6
12:42:05	13.5	5.6
12:42:20	13.5	5.6
12:42:35	13.4	5.6
12:42:50	13.4	5.6
12:43:05	13.4	5.7
12:43:20	13.4	5.6
12:43:35	13.5	5.6
Run Avg	**13.4**	**5.6**

CALIBRATION

Number 1

Client:	**Bowater**	Project Number:	**03917.008.014**
Location:	**Catawba, SC**	Operator:	**J. Ahern**
Source:	**No. 1 Swing Boiler**	Date:	**30 Jul 2009**

Starting Time: 10:59

O2

Method: EPA 3A

Calibration Type: Linear Regression

Calibration Results

%	Cylinder ID	Result, mv
Zero	-	23
10.0	CC 195528	422
19.9	SG 9151644	811

Curve Coefficients

Slope	Intercept	Corr. Coeff.
39.60	23.9	>0.9999

CO2

Method: EPA 3A

Calibration Type: Linear Regression

Calibration Results

%	Cylinder ID	Result, mv
Zero	-	17
10.1	CC 195528	127
19.8	SG 9151644	237

Curve Coefficients

Slope	Intercept	Corr. Coeff.
11.13	16.2	0.9999

CALIBRATION ERROR

Number 1

Client:	**Bowater**	Project Number:	**03917.008.014**
Location:	**Catawba, SC**	Operator:	**J. Ahern**
Source:	**No. 1 Swing Boiler**	Date:	**30 Jul 2009**

Starting Time: 10:59

O2

Method: EPA 3A

Slope 39.60 **Intercept** 23.9

Standard, %	**Response, mV**	**%**	**Error, %**
Zero	23	0.0	0.0
10.00	422	10.0	0.0
19.9	811	19.9	0.0

CO2

Method: EPA 3A

Slope 11.13 **Intercept** 16.2

Standard, %	**Response, mV**	**%**	**Error, %**
Zero	17	0.1	0.5
10.07	127	9.9	-0.9
19.8	237	19.8	0.2

ANALYZER INFORMATION

Client:	**Bowater**	Project Number:	**03917.008.014**
Location:	**Catawba, SC**	Operator:	**J. Ahern**
Source:	**No. 1 Swing Boiler**	Date:	**30 Jul 2009**

File Name: C:\Data\Bowater- Catawba, SC\July 2009 CEM\SWING BOILER.cem
Computer: WSAUB60 **Trailer:** 261

Analog Input Device: **Keithley KPCMCIA 16AI Card**

Channel 1

Analyte	**O2**
Method	**EPA 3A**, Using Bias
Analyzer Make, Model & Serial No.	**Servomex; 0144001/4302**
Full-Scale Output, mv	**1000**
Span Concentration, %	**19.9**

Channel 2

Analyte	**CO2**
Method	**EPA 3A**, Using Bias
Analyzer Make, Model & Serial No.	**Servomex; 0144001/4302**
Full-Scale Output, mv	**350**
Span Concentration, %	**19.8**

APPENDIX D
FIELD DATA – NOS. 2 AND 3 SMELT DISSOLVING TANK VENT

ISOKINETIC CALCULATIONS

Run Number		1	2	3	Mean
Date		7/29/09	7/29/09	7/29/09	---
Time Began		1101	1438	1708	---
Time Ended		1243	1545	1815	---
INPUT DATA					
Sampling Time, min	(Theta)	64.0	64	64	64
Stack Diameter, in.	(Dia.)	71.00	71.00	71.00	71.00
Barometric Pressure, in. Hg	(Pb)	29.23	29.23	29.23	29.23
Static Pressure, in. H2O	(Pg)	-0.25	-0.25	-0.25	-0.25
Pitot Tube Coefficient	(Cp)	0.84	0.84	0.84	0.84
Meter Correction Factor	(Y)	0.9840	0.9840	0.9840	0.9840
Orifice Calibration Value	(Delta H@)	1.9470	1.9470	1.9470	1.9470
Nozzle Diameter, in.	(Dn)	0.360	0.360	0.360	0.360
Meter Volume, ft^3	(Vm)	44.281	47.243	47.148	46.224
Meter Temperature, °F	(Tm)	87.3	92.3	93.0	90.9
Meter Temperature, °R	(Tm-R)	547.3	552.3	553.0	550.9
Meter Orifice Pressure, in. H2O	(Delta H)	1.675	1.813	1.806	1.765
Ave Sq Rt Orifice Press, (in. H2O)^½	((Delta H)½)avg)	1.291	1.345	1.343	1.326
Volume H2O Collected, mL	(Vlc)	596.1	539.2	526.0	553.8
CO2 Concentration, %	(CO2)	0.0	0.0	0.0	0.0
O2 Concentration, %	(O2)	20.9	20.9	20.9	20.9
Ave Sq Rt Velo Head, (in. H2O)^½	((Delta P)½)avg)	0.491	0.487	0.478	0.485
Stack Temperature, °F	(Ts)	170.6	167.4	165.9	168.0
Stack Temperature, °R	(Ts-R)	630.6	627.4	625.9	628.0
Particulate Collected, g	(Mn)	0.0981	0.0636	0.0691	0.0769
Moisture Fraction (at Saturation)	(BWS)	0.418	0.398	0.381	0.399
Production Rate, tons BLS/hr	(Pr)	119.5	118.0	118.3	118.6
CALCULATED DATA					
Nozzle Area, ft^2	(An)	7.07E-04	7.07E-04	7.07E-04	7.07E-04
Stack Area, ft^2	(As)	27.49	27.49	27.49	27.49
Stack Pressure, in. Hg	(Ps)	29.21	29.21	29.21	29.21
Meter Pressure, in. Hg	(Pm)	29.35	29.36	29.36	29.36
Standard Meter Volume, ft^3	(Vmstd)	41.223	43.597	43.454	42.758
Standard Water Volume, ft^3	(Vwstd)	28.058	25.380	24.759	26.066
Moisture Fraction (Measured)	(BWS)	0.405	0.368	0.363	0.379
Moisture Fraction (lower sat/meas)	(BWS)	0.405	0.368	0.363	0.379
Mol. Wt. of Dry Gas, lb/lb-mole	(Md)	28.84	28.84	28.84	28.84
Mol. Wt. of Stack Gas, lb/lb-mole	(Ms)	24.45	24.85	24.90	24.73
Average Stack Gas Velocity, ft/sec	(Vs)	33.13	32.51	31.84	32.50
Stack Gas Flow, actual, ft^3/min	(Qa)	54658	53636	52525	53607
Stack Gas Flow, Std , ft^3/min	(Qs)	26575	27843	27547	27322
Isokinetic Sampling Rate, %	(%I)	94.3	95.2	95.9	95.1
Particulate Conc @ Std Cond, gr/ft^3	(Cs)	0.0367	0.0225	0.0245	0.0279
Particulate Emission, lb/hr	(PMR)	8.4	5.4	5.8	6.5
Particulate Emission Rate, lb/ton BLS	(ER)	0.0700	0.0455	0.0490	0.0548
Calibration check	(Yqa)	1.0342	1.0144	1.0155	1.021
Percent difference from Y					3.80%

EMISSION CALCULATIONS

		Run 1	Run 2	Run 3	Mean
Date		**7/29/09**	**7/29/09**	**7/29/09**	**---**
Time Began		**914**	**1238**	**1614**	**---**
Time Ended		**1214**	**1538**	**1914**	**---**
Volumetric Flow Rate, (Qs), DSCFM		2.66E+04	2.78E+04	2.75E+04	2.73E+04
BWS		0.405	0.368	0.363	0.379
% Oxygen		20.9	20.9	20.9	20.9
Production Rate, units/hr ton BLS		119.5	118.0	118.3	118.6
Total Reduced Sulfur (TRS MW)=	34.08				
Concentration, ppm		4.33	4.49	3.99	4.27
Emission Rate, lb/hr		0.61	0.66	0.58	0.62
Emission Factor, lb/ton BLS		0.005	0.006	0.005	0.005

CLIENT	:	Balance ID:	Mettler AE163
WESTON W.O. No.	: 03917.008.014	Density of Acetone (g/mL):	0.7848
Date Analyzed	:	Lab Ambient Temp (F):	68.7
Analyst	:	Lab Rel Humidity (%):	48
		Barometric Pressure (Hg):	29.23

Source Operating Mode/Condition	**No. 3 SDTV**			
Field Run No.	**ONE**	**TWO**	**THREE**	**FIELD BLANK**
LIQUID FRACTION				
Probe Wash ID	**DA 0848**	**DA 0847**	**DA 0849**	**DA 875**
Beaker ID	74-06	75-06	76-06	77-06
Liquid Volume (mL)	40	65	50	65
Initial Beaker Weights (g)				
Weight #1	115.5456	110.4362	119.2020	112.1425
Weight #2	115.5461	110.4360	119.2019	112.1426
Average Initial Weight (g)	**115.5459**	**110.4361**	**119.2020**	**112.1426**
Final Beaker Weights (g)				
Weight #1	115.5467	110.4367	119.2029	112.1422
Weight #2	115.5469	110.4370	119.2032	112.1427
Average Final Weight (g)	**115.5468**	**110.4369**	**119.2031**	**112.1425**
Final-Initial Beaker Wts. (g)	0.0009	0.0008	0.0011	-0.0001
Sample/Blank Volume Ratio	0.6154	1.0000	0.7692	
Liquid Blank Correction (g)	-0.0001	-0.0001	-0.0001	
Liquid Particulate Weight (g)	**0.0010**	**0.0009**	**0.0012**	**-0.0001**
FILTER FRACTION				
Filter ID	**DA 0848**	**DA 0847**	**DA 0849**	**DA 875**
Initial Filter Weights (g)				
Weight #1	0.3951	0.3960	0.3941	0.3962
Weight #2	0.3951	0.3960	0.3940	0.3963
Average Initial Weight (g)	**0.3951**	**0.3960**	**0.3941**	**0.3963**
Final Filter Weights (g)				
Weight #1	0.4922	0.4587	0.4619	0.3965
Weight #2	0.4922	0.4587	0.4620	0.3966
Average Final Weight (g)	**0.4922**	**0.4587**	**0.4620**	**0.3966**
Final-Initial Filter Wts. (g)	0.0971	0.0627	0.0679	0.0003
Filter Blank (g)	0.0003	0.0003	0.0003	
Filter Particulate Weight (g)	**0.0971**	**0.0627**	**0.0679**	
SUMMARY				
Filter Particulate Weight (g)	**0.0971**	**0.0627**	**0.0679**	
Liquid Particulate Weight (g)	**0.0010**	**0.0009**	**0.0012**	
Net Particulate Weight (g)	**0.0981**	**0.0636**	**0.0691**	

Sample Recovery Solution **Water**

Weight Percent of Blank Liquid Fraction **-0.0002%**

Note: If the blank liquid fraction has a residue weight percent of greater than 0.001 percent, then the samples are not blank corrected.

ISOKINETIC FIELD DATA SHEET

Method 5

Page _1___ of ___1_

Client	Bowater				Meter Box ID	AO3					
W.O.#	03917.008.014				Meter Box Y	.984					
Project ID	N/A				Meter Box Del H	1.947					
Mode/Source ID	N/A				Probe ID / Length	AVB-PA-7	7'				
Samp. Loc. ID	Catawba, Sc				Probe Material	SS					
Run No.ID	1				Pitot / Thermocouple ID						
Test Method ID	M5				Pitot Coefficient	0.84					
Filter No.	DA0848				Nozzle ID	.360					
Source/Location	#2 & 3 SDTV				Avg Nozzle Dia (in)	.360					
Sample Date	29-Jul-09				Area of Stack (ft²)	27.49					
Baro. Press (in Hg)	29.23				Sample Time	64					
Operator	GM				Total Traverse Pts	16					

Stack Conditions

	Assumed	Actual
% Moisture	%.37	
Impinger Vol (ml)		586
Silica gel (g)		10.1
CO2, % by Vol	0	0
O2, % by Vol	20.9	20.9
Temperature (°F)	160	
Meter Temp (°F)	90	
Static Press (in H_2O)	-.21	
Ambient Temp (°F)		

K Factor

Leak Checks	Initial	Mid-Point	Final
Sample Train (ft³)	.004		.003
Leak Check @ (in Hg)	10"		7"
Pitot good	yes / no	yes / no	yes / no
Orsat good	yes / no	yes / no	yes / no

Temp Check	Pre-Test Set	Post-Test Set
Meter Box Temp		
Reference Temp		
Pass/Fail (+/- 2°)	Pass / Fail	Pass / Fail
Temp Change Response.?	yes / no	yes / no

TRAVERSE POINT NO	SAMPLE TIME (min)	CLOCK TIME (plant time)	VELOCITY PRESSURE Delta P (in H2O)	ORIFICE PRESSURE Delta H (in H2O)	DRY GAS METER READING (ft³)	STACK TEMP (°F)	DGM ~~INLET~~ Avg TEMP (°F)	DGM OUTLET TEMP (°F)	PROBE TEMP (°F)	FILTER BOX TEMP (°F)	IMPINGER EXIT TEMP (°F)	SAMPLE TRAIN VAC (in Hg)	Filter Exit	COMMENTS
	0	11:01			600.000									
A-1	4		.23	1.83 Gm	602.8	166	82		254	256	≤68	4	240	K Fact 7.94
2	8		.26	2.1	605.6	165	85		259	292		5	254	K Fact 8.10
3	12		.25	1.9	608.9	168	88		Gm ~~270~~ 254	270		5	259	K Fact 7.48
4	16		.26	1.7	611.4	172	89		251	282		5	256	K Fact 6.67
5	20		.25	1.7	614.2	172	88		251	276		5	258	K Fact 6.67
6	24		.26	1.7	617.0	172	88		250	271		5	259	K Fact 6.67
7	28		.26	1.9	620.1	169	88		251	281		5	255	K Fact 7.28
8	32		.22	1.7	622.725	167	88		251	281		5	256	K Fact 7.71
B-1	36		.20	1.5	625.3	168	86		252	271		6	260	K Fact 7.48
2	40		.22	1.7	628.1	167	88		252	298		6	251	K Fact 7.71
3	44		.25	1.7	630.8	172	88		252	300		6	257	K Fact 6.67
4	48		.26	1.7	633.6	172	87		252	283		6	257	K Fact 6.67
5	52		.25	1.5	636.5	175	87		252	278		6	256	K Fact 6.041
6	56		.25	1.6	639.1	174	88		251	284		6	254	K Fact 6.24
7	60		.25	1.5	642.0	175	88		252	289		6	254	K Fact 6.04
8	64	12:43	.19	1.1	644.281	175	88		251	288		6	255	K Fact 6.04

Avg Sqrt Delta P	Avg Delta H	Total Volume	Avg Ts	Avg Tm	Min/Max	Min/Max	Max Temp	Max Vac	Max Temp
.4906 ✓	1.675 ✓	44.281 ✓	~~170.6~~	87.25 ✓					
Avg .2412	Avg Sqrt Del H 1.2914 ✓	Comments:	~~170.6~~ Gm 170.6 ✓						

.418

WESTON MANAGERS DESIGNERS/CONSULTANTS

ISOKINETIC FIELD DATA SHEET

Method 5

Page _1___ of ___1_

Client	Bowater
W.O.#	03917.008.014
Project ID	N/A
Mode/Source ID	N/A
Samp. Loc. ID	Catawba, Sc
Run No.ID	2
Test Method ID	M5
Filter No.	DA08647
Source/Location	#2 & 3 SDTV
Sample Date	29-Jul-09
Baro. Press (in Hg)	29.23
Operator	GM

Stack Conditions

	Assumed	Actual
% Moisture	39.9	
Impinger Vol (ml)		6~~88~~6527
Silica gel (g)		12.2
CO2, % by Vol	0	0
O2, % by Vol	20.9	20.9
Temperature (°F)	169	
Meter Temp (°F)	90	
Static Press (in H_2O)	-.21	
Ambient Temp (°F)		

Meter Box ID	AO3
Meter Box Y	.984
Meter Box Del H	1.947
Probe ID / Length	AUB RR-70 7'
Probe Material	SS
Pitot / Thermocouple ID	
Pitot Coefficient	0.84
Nozzle ID	.360
Avg Nozzle Dia (in)	.360
Area of Stack (ft^2)	27.49
Sample Time	64
Total Traverse Pts	16

K Factor

Leak Checks	Initial	Mid-Point	Final
Sample Train (ft^3)	.007		.005
Leak Check @ (in Hg)	11"		8"
Pitot good	yes / no	yes / no	yes / no
Orsat good	yes / no	yes / no	yes / no

Temp Check	Pre-Test Set	Post-Test Set
Meter Box Temp		
Reference Temp		
Pass/Fail (+/- 2°)	Pass / Fail	Pass / Fail
Temp Change Response ?	yes / no	yes / no

TRAVERSE POINT NO.	SAMPLE TIME (min)	CLOCK TIME (plant time)	VELOCITY PRESSURE Delta P (in H2O)	ORIFICE PRESSURE Delta H (in H2O)	DRY GAS METER READING (ft)	STACK TEMP (°F)	Avg DGM TEMP (°F)	~~DGM OUTLET TEMP (°F)~~	PROBE TEMP (°F)	FILTER BOX TEMP (°F)	IMPINGER EXIT TEMP (°F)	SAMPLE TRAIN VAC (in Hg)	Filter Exit	COMMENTS
	0	14:38			645.000									
A-1	4		.21	1.5	647.2	169	89		252	254	≤68	4	253	K Fact 7.28
2	8		.25	1.8	650.5	169	90		252	255		5	254	K Fact 7.28
3	12		.26	1.9	653.5	169	91		252	260		5	258	K Fact 7.28
4	16		.26	1.9	656.5	168	92		252	257		5	258	K Fact 7.48
5	20		.25	2.0	659.7	166	92		252	257		5	256	K Fact 7.94
6	24		.26	2.0	662.7	167	93		251	260		5	255	K Fact 7.71
7	28		.23	1.8	665.7	166	93		251	266		5	256	K Fact 7.94
8	32		.18	1.5	668.373	165	93		252	272		5	255	K Fact 8.10
B-1	36		.21	1.6	671.1	167	92		252	259		5	262	K Fact 7.71
2	40		.25	1.9	674.1	168	93		252	262		6	257	K Fact 7.48
3	44		6m ~~.26~~ .26	1.9	677.2	168	93		252	261		6	259	K Fact 7.48
4	48		.24	1.9	6~~08~~680.2	167	93		251	260		6	258	K Fact 7.71
5	52		.25	2.0	683.3	166	93		252	259		6	258	K Fact 7.94
6	56		.26	1.9	686.4	169	93		252	258		6	258	K Fact 7.28
7	60		.24	1.9	689.4	167	93		252	259		6	257	K Fact 7.71
8	64	15:45	.20	1.5	692.243	167	93		253	262		6	255	K Fact 7.71
				1.813 ✓										
			Avg Sqrt Delta P .4873 ✓	Avg Delta H ~~1.807~~	Total Volume 47.243 ✓	Avg Ts 167.4 ✓	Avg Tm 92.3 ✓		Min/Max	Min/Max	Max Temp	Max Vac	Max Temp	
			Avg .238	Avg Sqrt Del H ~~1.342~~ 1.345 ✓	Comments: L .390									

WESTON MANAGERS DESIGNERS/CONSULTANTS

ISOKINETIC FIELD DATA SHEET

Method 5

Client	Bowater
W.O.#	03917.008.014
Project ID	N/A
Mode/Source ID	N/A
Samp. Loc. ID	Catawba, Sc
Run No.ID	3
Test Method ID	M5
Filter No.	040879
Source/Location	#2 & 3 SDTV
Sample Date	29-Jul-09
Baro. Press (in Hg)	29.23
Operator	GM

Stack Conditions

	Assumed	Actual
% Moisture	39	
Impinger Vol (ml)		515
Silica gel (g)		11
CO2, % by Vol	0	0
O2, % by Vol	20.9	20.9
Temperature (°F)	168	
Meter Temp (°F)	90	
Static Press (in H_2O)	-.21	-.25
Ambient Temp (°F)		

Meter Box ID	AO3
Meter Box Y	0.984
Meter Box Del H	1.947
Probe ID / Length	AUB-PR-70
Probe Material	SS
Pitot / Thermocouple ID	
Pitot Coefficient	0.84
Nozzle ID	.360
Avg Nozzle Dia (in)	.360
Area of Stack (ft^2)	~~87.97~~
Sample Time	60
Total Traverse Pts	24

K Factor

Leak Checks	Initial	Mid-Point	Final
Sample Train (ft^3)	.006		.004
Leak Check @ (in Hg)	11"		10"
Pitot good	yes / no	yes / no	yes / no
Orsat good	yes / no	yes / no	yes / no

Temp Check	Pre-Test Set	Post-Test Set
Meter Box Temp		
Reference Temp		
Pass/Fail (+/- 2°)	Pass / Fail	Pass / Fail
Temp Change Response ?	yes / no	yes / no

TRAVERSE POINT NO.	SAMPLE TIME (min)	CLOCK TIME (plant time)	VELOCITY PRESSURE Delta P (in H2O)	ORIFICE PRESSURE Delta H (in H2O)	DRY GAS METER READING (ft³)	STACK TEMP (°F)	DGM ~~INLET~~ AVG TEMP (°F)	DGM OUTLET TEMP (°F)	PROBE TEMP (°F)	FILTER BOX TEMP (°F)	IMPINGER EXIT TEMP (°F)	SAMPLE TRAIN VAC (in Hg)	Filter Exit	COMMENTS
	0	17:08			692.600									
A-1	4		.23	1.7	695.7	168	92		251	268	68	4	248	K Fact 7.94
2	8		.25	2.0	698.7	166	92		252	283		5	255	K Fact 7.94
3	12		.26	2.0	701.8	166	93		252	273		5	259	K Fact 7.94
4	16		.26	2.0	704.8	166	93		252	264		5	260	K Fact 7.94
5	20		.25	2.0	708.0	166	93		254	258		5	259	K Fact 7.94
6	24		.25	1.9	711.1	167	93		253	258		5	257	K Fact 7.71
7	28		.25	1.9	714.0	168	93		252	260		5	257	K Fact 7.48
8	32		.20	1.6	716.804	166	93		253	260		5	258	K Fact 7.94
B-1	36		.21	1.7	719.6	165	92		252	253		5	260	K Fact 8.10
2	40		.22	1.8	722.5	165	93		252	261		5	254	K Fact 8.10
3	44		.22	1.8	725.4	165	93		252	260		5	256	K Fact 8.10
4	48		.20	1.6	728.2	164	93		252	270		5	257	K Fact 8.10
5	52		.24	1.9	731.2	166	93		252	270		6	257	K Fact 7.94
6	56		.23	1.8	734.2	166	94		251	266		6	258	K Fact 7.94
7	60		.21	1.7	737.1	165	94		251	269		6	256	K Fact 8.10
8	64	18:15	.18	1.5	739.748	165	94		251	271			256	K Fact 8.10
			Avg Sqrt Delta P	Avg Delta H	Total Volume	Avg Ts	Avg Tm		Min/Max	Min/Max	Max Temp	Max Vac	Max Temp	
			.4776	1.8063	47.148	165.9	93							
			Avg .2288	Avg Sqrt Del H 1.3427	Comments:		L .381							

WESTON MANAGERS DESIGNERS/CONSULTANTS

SAMPLE RECOVERY FIELD DATA

Method 5

Client	Bowater	W.O. #	03917.008.014
Location/Plant	Catawba, Sc	Source & Location	#2 & 3 SDTV

Run No. 1 — Sample Date 7/29/2009 — Recovery Date 7/29/2009

Sample I.D. — Analyst — Filter Number D40848

	Impinger									
	1	2	3	4	5	6	7	Imp.Total	8	Total
Contents	Empty ~~H2O~~	H2O	~~H2O~~ Empty	Empty					Silica Gel	
Final	322	294	170	0				786	3323	
Initial	0 ~~400~~	100	100	0				200	320.2	
Gain	322	194	70	0				586	10.1	596.1

Impinger Color — Labeled?

Silica Gel Condition — Sealed?

Run No. 2 — Sample Date 7/29/2009 — Recovery Date 7/29/2009

Sample I.D. — Analyst — Filter Number D40847

	Impinger									
	1	2	3	4	5	6	7	Imp.Total	8	Total
Contents	Empty ~~H2O~~	H2O	~~H2O~~ Empty	Empty					Silica Gel	
Final	306	271	150	0				727	339.4	
Initial	0 ~~100~~	100	100	0				200	327.2	
Gain	306	171	50	0				527	12.2	539.2

Impinger Color — Labeled?

Silica Gel Condition — Sealed?

Run No. 3 — Sample Date 7/29/2009 — Recovery Date 7/29/2009

Sample I.D. — Analyst — Filter Number D40849

	Impinger									
	1	2	3	4	5	6	7	Imp.Total	8	Total
Contents	Empty ~~H2O~~	H2O	~~H2O~~ Empty	Empty					Silica Gel	
Final	312	281	122	0				715	338.0	
Initial	0 ~~100~~	100	100	0				200	351.0	
Gain	~~315~~ 312	~~281~~ 281	22	0				515	11	526.0

Impinger Color (Clear) 1 — Labeled?

Silica Gel Condition mhw 9/25/09 — Sealed?

Check COC for Sample IDs of Media Blanks

WESTON MANAGERS DESIGNERS/CONSULTANTS

mhw

Sample and Velocity Traverse Point Data Sheet - Method 1

Client	Bowater	Operator	TS
Loaction/Plant	Catawba, SC	Date	3-Aug-05
Source	No. 2 & 3 SDTV	W.O. Number	03917.008.005

Duct Type	☑ Circular	☐ Rectangular Duct		Indicate appropriate type
Traverse Type	☐ Particulate Traverse	☑ Velocity Traverse		

Distance from far wall to outside of port (in.) = C	77.8
Port Depth (in.) = D	6.8
Depth of Duct, diameter (in.) = C-D	71
Area of Duct (ft^2)	27.49
Total Traverse Points	16
Total Traverse Points per Port	8

Rectangular Ducts Only	
Width of Duct, rectangular duct only (in.)	
Total Ports (rectangular duct only)	

Flow Disturbances	
Upstream - A (ft)	10.0
Downstream - B (ft)	38.0
Upstream - A (duct diameters)	1.69
Downstream - B (duct diameters)	6.42

Diagram of Stack

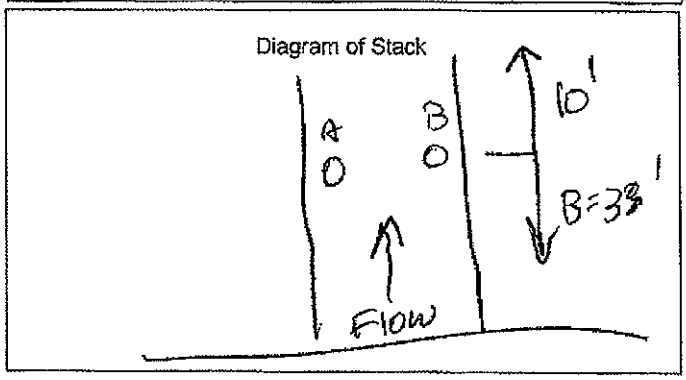

Traverse Point Locations

Traverse Point	% of Duct	Distance from Inside Duct Wall (in)	Distance from Outside of Port (in)
1	3.2	2 1/2	9
2	10.5	7 1/2	14
3	19.4	14	20 1/2
4	32.3	23	29 1/2
5	67.7	48	55
6	80.6	57	64
7	89.5	63 1/2	70 1/2
8	96.8	68 1/2	75 1/2
9			
10			
11			
12			

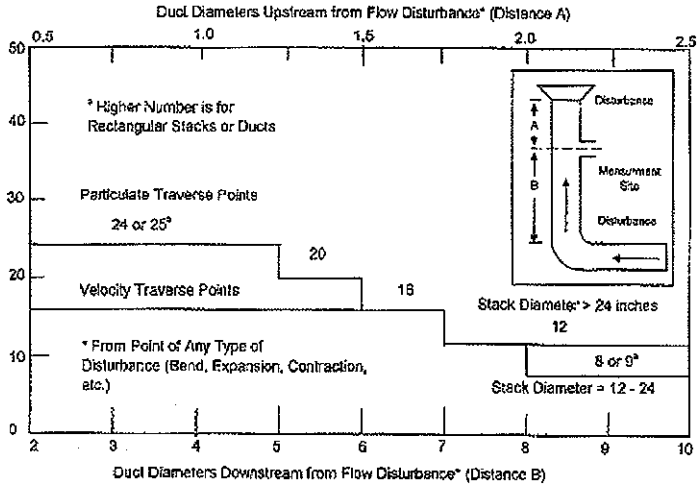

Equivalent Diameter = (2*L*W)/(L+W)

Traverse Point Location Percent of Stack -Circular

Traverse Point	Number of Traverse Points: 1	2	3	4	5	6	7	8	9	10	11	12
1		14.6		6.7		4.4		3.2		2.6		2.1
2		85.4		25		14.6		10.5		8.2		6.7
3				75		29.6		19.4		14.6		11.8
4				93.3		70.4		32.3		22.6		17.7
5						85.4		67.7		34.2		25
6						95.6		80.6		65.8		35.6
7								89.5		77.4		64.4
8								96.8		85.4		75
9										91.8		82.3
10										97.4		88.2
11												93.3
12												97.9

Traverse Point Location Percent of Stack -Rectangular

Traverse Point	Number of Traverse Points: 1	2	3	4	5	6	7	8	9	10	11	12
1		25.0	16.7	12.5	10.0	8.3	7.1	6.3	5.6	5.0	4.5	4.2
2		75.0	50.0	37.5	30.0	25.0	21.4	18.8	16.7	15.0	13.6	12.5
3			83.3	62.5	50.0	41.7	35.7	31.3	27.8	25.0	22.7	20.8
4				87.5	70.0	58.3	50.0	43.8	38.9	35.0	31.8	29.2
5					90.0	75.0	64.3	56.3	50.0	45.0	40.9	37.5
6						91.7	78.6	68.8	61.1	55.0	50.0	45.8
7							92.9	81.3	72.2	65.0	59.1	54.2
8								93.8	83.3	75.0	68.2	62.5
9									94.4	85.0	77.3	70.8
10										95.0	86.4	79.2
11											95.5	87.5
12												95.8

Rectangular Stack Points & Matrix
9 - 3 x 3
12 - 4 x 3
16 - 4 x 4
20 - 5 x 4
25 - 5 x 5
30 - 6 x 5
36 - 6 x 6
42 - 7 x 6
49 - 7 x 7

WESTON MANAGERS DESIGNERS/CONSULTANTS

Copyright Roy F Weston Inc Oct 1998PV

RUN SUMMARY

Number 1

Client:	**Bowater**	Project Number:	**03917.008.014**
Location:	**Catawba, SC**	Operator:	**T. Simpkins**
Source:	**No. 2, 3 SDTV**	Date:	**29 Jul 2009**
Method:	**16**	**Calibration Number** 1	

Start Time 09:14 **End Time** 12:14

Average Measured TRS Conc.	4.30	**ppm**
Recovery No. 2	99.3	**%**
TRS Corrected for Recovery	4.33	**ppm**

WESTON SOLUTIONS

RUN SUMMARY

Number 2

Client:	**Bowater**	Project Number:	**03917.008.014**
Location:	**Catawba, SC**	Operator:	**T. Simpkins**
Source:	**No. 2, 3 SDTV**	Date:	**29 Jul 2009**
Method:	**16**	**Calibration Number** 1	

Start Time 12:38 **End Time** 15:38

Average Measured TRS Conc.	4.45	**ppm**
Recovery No. 3	98.9	**%**
TRS Corrected for Recovery	4.49	**ppm**

WESTON SOLUTIONS

RUN SUMMARY

Number 3

Client:	**Bowater**	Project Number:	**03917.008.014**
Location:	**Catawba, SC**	Operator:	**T. Simpkins**
Source:	**No. 2, 3 SDTV**	Date:	**29 Jul 2009**
Method:	**16**	**Calibration Number** 1	

Start Time 16:14 **End Time** 19:14

Average Measured TRS Conc.	3.94	**ppm**
Recovery No. 4	98.9	**%**
TRS Corrected for Recovery	3.99	**ppm**

WESTON SOLUTIONS

REDUCED SULFUR FIELD DATA

Run 1

Client: **Bowater**
Location: **Catawba, SC**
Source: **No. 2, 3 SDTV**
Method: **16** **Calibration Number** 1

Project Number: **03917.008.014**
Operator: **T. Simpkins**
Date: **29 Jul 2009**

Time	H_2S		MeSH		DMS		DMDS		TRS
	area	ppm	area	ppm	area	ppm	area	ppm	ppm
09:14	2855	4.57	<2	<0.26	<2	<0.16	<2	<0.12	4.57
09:17	3248	4.85	<2	<0.26	<2	<0.16	<2	<0.12	4.85
09:20	2306	4.16	<2	<0.26	<2	<0.16	<2	<0.12	4.16
09:23	2666	4.44	<2	<0.26	<2	<0.16	<2	<0.12	4.44
09:26	2021	3.92	<2	<0.26	<2	<0.16	<2	<0.12	3.92
09:29	1861	3.78	<2	<0.26	<2	<0.16	<2	<0.12	3.78
09:32	2246	4.11	<2	<0.26	<2	<0.16	<2	<0.12	4.11
09:35	2430	4.26	<2	<0.26	<2	<0.16	<2	<0.12	4.26
09:38	2726	4.48	<2	<0.26	<2	<0.16	<2	<0.12	4.48
09:41	3222	4.83	<2	<0.26	<2	<0.16	<2	<0.12	4.83
09:44	2757	4.50	<2	<0.26	<2	<0.16	<2	<0.12	4.50
09:47	3089	4.74	<2	<0.26	<2	<0.16	<2	<0.12	4.74
09:50	2791	4.53	<2	<0.26	<2	<0.16	<2	<0.12	4.53
09:53	2883	4.60	<2	<0.26	<2	<0.16	<2	<0.12	4.60
09:56	2281	4.14	<2	<0.26	<2	<0.16	<2	<0.12	4.14
09:59	1886	3.80	<2	<0.26	<2	<0.16	<2	<0.12	3.80
10:02	2026	3.93	<2	<0.26	<2	<0.16	<2	<0.12	3.93
10:05	1974	3.88	<2	<0.26	<2	<0.16	<2	<0.12	3.88
10:08	1615	3.55	<2	<0.26	<2	<0.16	<2	<0.12	3.55
10:11	1437	3.37	<2	<0.26	<2	<0.16	<2	<0.12	3.37
10:14	2034	3.93	<2	<0.26	<2	<0.16	<2	<0.12	3.93
10:17	2469	4.29	<2	<0.26	<2	<0.16	<2	<0.12	4.29
10:20	4722	5.73	<2	<0.26	<2	<0.16	<2	<0.12	5.73
10:23	3485	5.00	<2	<0.26	<2	<0.16	<2	<0.12	5.00
10:26	3532	5.03	<2	<0.26	<2	<0.16	<2	<0.12	5.03
10:29	3148	4.78	<2	<0.26	<2	<0.16	<2	<0.12	4.78
10:32	3267	4.86	<2	<0.26	<2	<0.16	<2	<0.12	4.86
10:35	2806	4.54	<2	<0.26	<2	<0.16	<2	<0.12	4.54
10:38	2876	4.59	<2	<0.26	<2	<0.16	<2	<0.12	4.59
10:41	3335	4.90	<2	<0.26	<2	<0.16	<2	<0.12	4.90
10:44	3308	4.88	<2	<0.26	<2	<0.16	<2	<0.12	4.88
10:47	3121	4.76	<2	<0.26	<2	<0.16	<2	<0.12	4.76
10:50	1958	3.87	<2	<0.26	<2	<0.16	<2	<0.12	3.87
10:53	2426	4.26	<2	<0.26	<2	<0.16	<2	<0.12	4.26

WESTON SOLUTIONS

REDUCED SULFUR FIELD DATA

Run 1

Client: **Bowater**
Location: **Catawba, SC**
Source: **No. 2, 3 SDTV**
Method: **16** **Calibration Number** 1

Project Number: **03917.008.014**
Operator: **T. Simpkins**
Date: **29 Jul 2009**

Time	H_2S		MeSH		DMS		DMDS		TRS
	area	ppm	area	ppm	area	ppm	area	ppm	ppm
10:56	2296	4.15	<2	<0.26	<2	<0.16	<2	<0.12	4.15
10:59	1960	3.87	<2	<0.26	<2	<0.16	<2	<0.12	3.87
11:02	2181	4.06	<2	<0.26	<2	<0.16	<2	<0.12	4.06
11:05	1466	3.40	<2	<0.26	<2	<0.16	<2	<0.12	3.40
11:08	1807	3.73	<2	<0.26	<2	<0.16	<2	<0.12	3.73
11:11	1695	3.63	<2	<0.26	<2	<0.16	<2	<0.12	3.63
11:14	1648	3.58	<2	<0.26	<2	<0.16	<2	<0.12	3.58
11:17	1479	3.41	<2	<0.26	<2	<0.16	<2	<0.12	3.41
11:20	1555	3.49	<2	<0.26	<2	<0.16	<2	<0.12	3.49
11:23	2134	4.02	<2	<0.26	<2	<0.16	<2	<0.12	4.02
11:26	1807	3.73	<2	<0.26	<2	<0.16	<2	<0.12	3.73
11:29	1357	3.28	<2	<0.26	<2	<0.16	<2	<0.12	3.28
11:32	2119	4.01	<2	<0.26	<2	<0.16	<2	<0.12	4.01
11:35	1891	3.81	<2	<0.26	<2	<0.16	<2	<0.12	3.81
11:38	2334	4.18	<2	<0.26	<2	<0.16	<2	<0.12	4.18
11:41	2772	4.51	<2	<0.26	<2	<0.16	<2	<0.12	4.51
11:44	2106	4.00	<2	<0.26	<2	<0.16	<2	<0.12	4.00
11:47	2920	4.62	<2	<0.26	<2	<0.16	<2	<0.12	4.62
11:50	2519	4.33	<2	<0.26	<2	<0.16	<2	<0.12	4.33
11:53	3679	5.12	<2	<0.26	<2	<0.16	<2	<0.12	5.12
11:56	3319	4.89	<2	<0.26	<2	<0.16	<2	<0.12	4.89
11:59	3482	5.00	<2	<0.26	<2	<0.16	<2	<0.12	5.00
12:02	2938	4.63	<2	<0.26	<2	<0.16	<2	<0.12	4.63
12:05	2779	4.52	<2	<0.26	<2	<0.16	<2	<0.12	4.52
12:08	2239	4.10	<2	<0.26	<2	<0.16	<2	<0.12	4.10
12:11	4964	5.85	<2	<0.26	<2	<0.16	<2	<0.12	5.85
Averages:		**4.30**		-		-		-	**4.30**

WESTON SOLUTIONS

REDUCED SULFUR FIELD DATA

Run 2

Client: **Bowater**
Location: **Catawba, SC**
Source: **No. 2, 3 SDTV**
Method: **16** **Calibration Number** 1

Project Number: **03917.008.014**
Operator: **T. Simpkins**
Date: **29 Jul 2009**

Time	H_2S		MeSH		DMS		DMDS		TRS
	area	ppm	area	ppm	area	ppm	area	ppm	ppm
12:38	4782	5.76	<2	<0.26	<2	<0.16	<2	<0.12	5.76
12:41	3489	5.00	<2	<0.26	<2	<0.16	<2	<0.12	5.00
12:44	3443	4.97	<2	<0.26	<2	<0.16	<2	<0.12	4.97
12:47	3964	5.30	<2	<0.26	<2	<0.16	<2	<0.12	5.30
12:50	3845	5.22	<2	<0.26	<2	<0.16	<2	<0.12	5.22
12:53	2964	4.65	<2	<0.26	<2	<0.16	<2	<0.12	4.65
12:56	2574	4.37	<2	<0.26	<2	<0.16	<2	<0.12	4.37
12:59	2904	4.61	<2	<0.26	<2	<0.16	<2	<0.12	4.61
13:02	3373	4.93	<2	<0.26	<2	<0.16	<2	<0.12	4.93
13:05	3085	4.74	<2	<0.26	<2	<0.16	<2	<0.12	4.74
13:08	2811	4.54	<2	<0.26	<2	<0.16	<2	<0.12	4.54
13:11	2725	4.48	<2	<0.26	<2	<0.16	<2	<0.12	4.48
13:14	2289	4.15	<2	<0.26	<2	<0.16	<2	<0.12	4.15
13:17	<2	<0.18	<2	<0.26	<2	<0.16	<2	<0.12	-
13:20	1868	3.79	<2	<0.26	<2	<0.16	<2	<0.12	3.79
13:23	2063	3.96	<2	<0.26	<2	<0.16	<2	<0.12	3.96
13:26	1861	3.78	<2	<0.26	<2	<0.16	<2	<0.12	3.78
13:29	1956	3.87	<2	<0.26	<2	<0.16	<2	<0.12	3.87
13:32	1787	3.71	<2	<0.26	<2	<0.16	<2	<0.12	3.71
13:35	2017	3.92	<2	<0.26	<2	<0.16	<2	<0.12	3.92
13:38	1848	3.77	<2	<0.26	<2	<0.16	<2	<0.12	3.77
13:41	2454	4.28	<2	<0.26	<2	<0.16	<2	<0.12	4.28
13:44	2259	4.12	<2	<0.26	<2	<0.16	<2	<0.12	4.12
13:47	2901	4.61	<2	<0.26	<2	<0.16	<2	<0.12	4.61
13:50	3174	4.80	<2	<0.26	<2	<0.16	<2	<0.12	4.80
13:53	3079	4.73	<2	<0.26	<2	<0.16	<2	<0.12	4.73
13:56	3150	4.78	<2	<0.26	<2	<0.16	<2	<0.12	4.78
13:59	2703	4.46	<2	<0.26	<2	<0.16	<2	<0.12	4.46
14:02	2773	4.52	<2	<0.26	<2	<0.16	<2	<0.12	4.52
14:05	3245	4.84	<2	<0.26	<2	<0.16	<2	<0.12	4.84
14:08	2838	4.56	<2	<0.26	<2	<0.16	<2	<0.12	4.56
14:11	2858	4.58	<2	<0.26	<2	<0.16	<2	<0.12	4.58
14:14	3064	4.72	<2	<0.26	<2	<0.16	<2	<0.12	4.72
14:17	3705	5.14	<2	<0.26	<2	<0.16	<2	<0.12	5.14

REDUCED SULFUR FIELD DATA

Run 2

Client: **Bowater**
Location: **Catawba, SC**
Source: **No. 2, 3 SDTV**
Method: **16** **Calibration Number** 1

Project Number: **03917.008.014**
Operator: **T. Simpkins**
Date: **29 Jul 2009**

Time	H_2S		MeSH		DMS		DMDS		TRS
	area	ppm	area	ppm	area	ppm	area	ppm	ppm
14:20	5147	5.95	<2	<0.26	<2	<0.16	<2	<0.12	5.95
14:23	5200	5.98	<2	<0.26	<2	<0.16	<2	<0.12	5.98
14:26	4611	5.66	<2	<0.26	<2	<0.16	<2	<0.12	5.66
14:29	3726	5.15	<2	<0.26	<2	<0.16	<2	<0.12	5.15
14:32	3971	5.30	<2	<0.26	<2	<0.16	<2	<0.12	5.30
14:35	3298	4.88	<2	<0.26	<2	<0.16	<2	<0.12	4.88
14:38	4085	5.37	<2	<0.26	<2	<0.16	<2	<0.12	5.37
14:41	3270	4.86	<2	<0.26	<2	<0.16	<2	<0.12	4.86
14:44	3483	5.00	<2	<0.26	<2	<0.16	<2	<0.12	5.00
14:47	2852	4.57	<2	<0.26	<2	<0.16	<2	<0.12	4.57
14:50	2699	4.46	<2	<0.26	<2	<0.16	<2	<0.12	4.46
14:53	2404	4.24	<2	<0.26	<2	<0.16	<2	<0.12	4.24
14:56	2491	4.30	<2	<0.26	<2	<0.16	<2	<0.12	4.30
14:59	1911	3.83	<2	<0.26	<2	<0.16	<2	<0.12	3.83
15:02	2087	3.98	<2	<0.26	<2	<0.16	<2	<0.12	3.98
15:05	1958	3.87	<2	<0.26	<2	<0.16	<2	<0.12	3.87
15:08	2007	3.91	<2	<0.26	<2	<0.16	<2	<0.12	3.91
15:11	1557	3.49	<2	<0.26	<2	<0.16	<2	<0.12	3.49
15:14	1952	3.86	<2	<0.26	<2	<0.16	<2	<0.12	3.86
15:17	2007	3.91	<2	<0.26	<2	<0.16	<2	<0.12	3.91
15:20	2146	4.03	<2	<0.26	<2	<0.16	<2	<0.12	4.03
15:23	2434	4.26	<2	<0.26	<2	<0.16	<2	<0.12	4.26
15:26	2244	4.11	<2	<0.26	<2	<0.16	<2	<0.12	4.11
15:29	2388	4.22	<2	<0.26	<2	<0.16	<2	<0.12	4.22
15:32	2209	4.08	<2	<0.26	<2	<0.16	<2	<0.12	4.08
15:35	1993	3.90	<2	<0.26	<2	<0.16	<2	<0.12	3.90
Averages:		**4.45**		**-**		**-**		**-**	**4.45**

/N/

REDUCED SULFUR FIELD DATA

Run 3

Client: **Bowater**
Location: **Catawba, SC**
Source: **No. 2, 3 SDTV**
Method: **16** **Calibration Number** 1

Project Number: **03917.008.014**
Operator: **T. Simpkins**
Date: **29 Jul 2009**

Time	H_2S		MeSH		DMS		DMDS		TRS
	area	ppm	area	ppm	area	ppm	area	ppm	ppm
16:14	3621	5.09	<2	<0.26	<2	<0.16	<2	<0.12	5.09
16:17	4052	5.35	<2	<0.26	<2	<0.16	<2	<0.12	5.35
16:20	4591	5.65	<2	<0.26	<2	<0.16	<2	<0.12	5.65
16:23	3985	5.31	<2	<0.26	<2	<0.16	<2	<0.12	5.31
16:26	3288	4.87	<2	<0.26	<2	<0.16	<2	<0.12	4.87
16:29	3696	5.13	<2	<0.26	<2	<0.16	<2	<0.12	5.13
16:32	3405	4.95	<2	<0.26	<2	<0.16	<2	<0.12	4.95
16:35	3155	4.78	<2	<0.26	<2	<0.16	<2	<0.12	4.78
16:38	2612	4.40	<2	<0.26	<2	<0.16	<2	<0.12	4.40
16:41	2253	4.12	<2	<0.26	<2	<0.16	<2	<0.12	4.12
16:44	1746	3.67	<2	<0.26	<2	<0.16	<2	<0.12	3.67
16:47	1836	3.76	<2	<0.26	<2	<0.16	<2	<0.12	3.76
16:50	2043	3.94	<2	<0.26	<2	<0.16	<2	<0.12	3.94
16:53	2404	4.24	<2	<0.26	<2	<0.16	<2	<0.12	4.24
16:56	2809	4.54	<2	<0.26	<2	<0.16	<2	<0.12	4.54
16:59	2474	4.29	<2	<0.26	<2	<0.16	<2	<0.12	4.29
17:02	2425	4.25	<2	<0.26	<2	<0.16	<2	<0.12	4.25
17:05	2370	4.21	<2	<0.26	<2	<0.16	<2	<0.12	4.21
17:08	2030	3.93	<2	<0.26	<2	<0.16	<2	<0.12	3.93
17:11	2194	4.07	<2	<0.26	<2	<0.16	<2	<0.12	4.07
17:14	1780	3.71	<2	<0.26	<2	<0.16	<2	<0.12	3.71
17:17	2055	3.95	<2	<0.26	<2	<0.16	<2	<0.12	3.95
17:20	1779	3.71	<2	<0.26	<2	<0.16	<2	<0.12	3.71
17:23	2126	4.01	<2	<0.26	<2	<0.16	<2	<0.12	4.01
17:26	1691	3.62	<2	<0.26	<2	<0.16	<2	<0.12	3.62
17:29	1809	3.73	<2	<0.26	<2	<0.16	<2	<0.12	3.73
17:32	1938	3.85	<2	<0.26	<2	<0.16	<2	<0.12	3.85
17:35	1843	3.76	<2	<0.26	<2	<0.16	<2	<0.12	3.76
17:38	1745	3.67	<2	<0.26	<2	<0.16	<2	<0.12	3.67
17:41	1778	3.70	<2	<0.26	<2	<0.16	<2	<0.12	3.70
17:44	1417	3.35	<2	<0.26	<2	<0.16	<2	<0.12	3.35
17:47	1496	3.43	<2	<0.26	<2	<0.16	<2	<0.12	3.43
17:50	1237	3.15	<2	<0.26	<2	<0.16	<2	<0.12	3.15
17:53	1074	2.96	<2	<0.26	<2	<0.16	<2	<0.12	2.96

WESTON SOLUTIONS

REDUCED SULFUR FIELD DATA

Run 3

Client: **Bowater**
Location: **Catawba, SC**
Source: **No. 2, 3 SDTV**
Method: **16** **Calibration Number** 1

Project Number: **03917.008.014**
Operator: **T. Simpkins**
Date: **29 Jul 2009**

Time	H_2S		MeSH		DMS		DMDS		TRS
	area	ppm	area	ppm	area	ppm	area	ppm	ppm
17:56	1294	3.22	<2	<0.26	<2	<0.16	<2	<0.12	3.22
17:59	1359	3.29	<2	<0.26	<2	<0.16	<2	<0.12	3.29
18:02	1338	3.26	<2	<0.26	<2	<0.16	<2	<0.12	3.26
18:05	1480	3.41	<2	<0.26	<2	<0.16	<2	<0.12	3.41
18:08	1236	3.15	<2	<0.26	<2	<0.16	<2	<0.12	3.15
18:11	1253	3.17	<2	<0.26	<2	<0.16	<2	<0.12	3.17
18:14	1183	3.09	<2	<0.26	<2	<0.16	<2	<0.12	3.09
18:17	1472	3.41	<2	<0.26	<2	<0.16	<2	<0.12	3.41
18:20	1388	3.32	<2	<0.26	<2	<0.16	<2	<0.12	3.32
18:23	1597	3.53	<2	<0.26	<2	<0.16	<2	<0.12	3.53
18:26	1685	3.62	<2	<0.26	<2	<0.16	<2	<0.12	3.62
18:29	1760	3.69	<2	<0.26	<2	<0.16	<2	<0.12	3.69
18:32	1981	3.89	<2	<0.26	<2	<0.16	<2	<0.12	3.89
18:35	2152	4.03	<2	<0.26	<2	<0.16	<2	<0.12	4.03
18:38	2207	4.08	<2	<0.26	<2	<0.16	<2	<0.12	4.08
18:41	1514	3.45	<2	<0.26	<2	<0.16	<2	<0.12	3.45
18:44	1597	3.53	<2	<0.26	<2	<0.16	<2	<0.12	3.53
18:47	1563	3.50	<2	<0.26	<2	<0.16	<2	<0.12	3.50
18:50	1910	3.82	<2	<0.26	<2	<0.16	<2	<0.12	3.82
18:53	1964	3.87	<2	<0.26	<2	<0.16	<2	<0.12	3.87
18:56	2400	4.23	<2	<0.26	<2	<0.16	<2	<0.12	4.23
18:59	2202	4.08	<2	<0.26	<2	<0.16	<2	<0.12	4.08
19:02	2151	4.03	<2	<0.26	<2	<0.16	<2	<0.12	4.03
19:05	2813	4.54	<2	<0.26	<2	<0.16	<2	<0.12	4.54
19:08	2375	4.21	<2	<0.26	<2	<0.16	<2	<0.12	4.21
19:11	2238	4.10	<2	<0.26	<2	<0.16	<2	<0.12	4.10
Averages:		**3.94**		-		-		-	**3.94**

WESTON SOLUTIONS

RECOVERY DATA

Number 1

Client: **Bowater**
Location: **Catawba, SC**
Source: **No. 2, 3 SDTV**
Method: **16**

Project Number: **03917.008.014**
Operator: **T. Simpkins**
Date: **29 Jul 2009**

Calibration Number 1 **Before Run** 1
Start Time 08:57 **End Time** 09:05

Recovery was run using H_2S

Recovery Gas to Probe, Time: 08:57

Peak Areas, mv-sec			Average	ppm
9843	9878	9886	9869	7.95

Recovery Gas to GC, Time: 09:02

Peak Areas, mv-sec			Average	ppm
12055	12143	12199	12132	8.72

Recovery 91.2%

WESTON SOLUTIONS

RECOVERY DATA

Number 2

Client: **Bowater**
Location: **Catawba, SC**
Source: **No. 2, 3 SDTV**
Method: **16**

Project Number: **03917.008.014**
Operator: **T. Simpkins**
Date: **29 Jul 2009**

Calibration Number 1 **After Run** 1 **Before Run** 2
Start Time 12:17 **End Time** 12:35

Recovery was run using H_2S

Recovery Gas to Probe, Time: 12:17

Peak Areas, mv-sec			Average	ppm
11864	12049	11887	11933	8.65

Recovery Gas to GC, Time: 12:33

Peak Areas, mv-sec			Average	ppm
11644	12308	12448	12133	8.72

Recovery 99.3%

WESTON SOLUTIONS

RECOVERY DATA

Number 3

Client: **Bowater**
Location: **Catawba, SC**
Source: **No. 2, 3 SDTV**
Method: **16**

Project Number: **03917.008.014**
Operator: **T. Simpkins**
Date: **29 Jul 2009**

Calibration Number 1 **After Run** 2 **Before Run** 3
Start Time 15:39 **End Time** 15:57

Recovery was run using H_2S

Recovery Gas to Probe, Time: 15:39

Peak Areas, mv-sec			Average	ppm
12156	12411	12320	12296	8.77

Recovery Gas to GC, Time: 15:52

Peak Areas, mv-sec			Average	ppm
12603	12555	12618	12592	8.86

Recovery 98.9%

WESTON SOLUTIONS

RECOVERY DATA

Number 4

Client: **Bowater**
Location: **Catawba, SC**
Source: **No. 2, 3 SDTV**
Method: **16**

Project Number: **03917.008.014**
Operator: **T. Simpkins**
Date: **29 Jul 2009**

Calibration Number 1 **After Run** 3 **Before Run** 4
Start Time 19:15 **End Time** 19:32

Recovery was run using H_2S

Recovery Gas to Probe, Time: 19:15

Peak Areas, mv-sec			Average	ppm
12448	12308	12527	12428	8.81

Recovery Gas to GC, Time: 19:28

Peak Areas, mv-sec			Average	ppm
12770	12746	12720	12745	8.91

Recovery 98.9%

INV

WESTON SOLUTIONS

CALIBRATION DATA

Number 1

Client: **Bowater**
Location: **Catawba, SC**
Source: **No. 2, 3 SDTV**
Method: **16**

Project Number: **03917.008.014**
Operator: **T. Simpkins**
Date: **29 Jul 2009**

Ambient Temp 72°F **Baro. Press.** 29.26 in. Hg

Compound	**H_2S**	**MeSH**	**DMS**	**DMDS**
Perm. Device ID	T-32759	33-32773	19-32781	89-32782
Perm. Rate, nL/min	510	397	305	226
Ret. Time, sec	18.0	32.5	81.0	131.0
1 Flow 157 **mL/min**	**3.25** ppm	**2.53** ppm	**1.94** ppm	**1.44** ppm
Time: 08:07		**Peak Areas, mv-sec**		
	1308	358	444	569
	1302	356	430	523
	1322	371	419	553
Average Area	**1311**	**362**	**431**	**548**
2 Flow 71.6 **mL/min**	**7.13** ppm	**5.54** ppm	**4.25** ppm	**3.16** ppm
Time: 07:53		**Peak Areas, mv-sec**		
	8240	2225	2276	3456
	8118	2096	2165	3415
	7863	2091	2110	3262
Average Area	**8074**	**2137**	**2184**	**3377**
3 Flow 55.8 **mL/min**	**9.14** ppm	**7.11** ppm	**5.46** ppm	**4.06** ppm
Time: 08:31		**Peak Areas, mv-sec**		
	13432	3648	3617	5171
	12986	3607	3539	4934
	12713	3479	3381	5015
Average Area	**13044**	**3578**	**3512**	**5040**
4 Flow 33.3 **mL/min**	**15.3** ppm	**11.9** ppm	**9.14** ppm	**6.80** ppm
Time: 07:42		**Peak Areas, mv-sec**		
		12513	12696	18764
		12369	12612	18550
		12515	12721	18556
Average Area	---	**12466**	**12676**	**18623**

WESTON SOLUTIONS

CALIBRATION SUMMARY

Number 1

Client: **Bowater**
Location: **Catawba, SC**
Source: **No. 2, 3 SDTV**
Method: **16**

Project Number: **03917.008.014**
Operator: **T. Simpkins**
Date: **29 Jul 2009**

H_2S	1	2	3		
Time	08:07	07:53	08:31		
Conc.	3.25	7.13	9.14		
Response	1311	8074	13044		
Calc. Conc.	3.23	7.27	9.00		
% Error	-0.5	+2.0	-1.5		
Calibration Curve:	Slope	Intercept	Corr Coeff	Min Area	Det Lim
	2.2439	1.9738	0.9994	2	0.18

MeSH	1	2	3	4	
Time	08:07	07:53	08:31	07:42	
Conc.	2.53	5.54	7.11	11.9	
Response	362	2137	3578	12466	
Calc. Conc.	2.54	5.56	6.97	12.1	
% Error	+0.6	+0.2	-2.0	+1.3	
Calibration Curve:	Slope	Intercept	Corr Coeff	Min Area	Det Lim
	2.2726	1.6375	0.9998	2	0.26

DMS	1	2	3	4	
Time	08:07	07:53	08:31	07:42	
Conc.	1.94	4.25	5.46	9.14	
Response	431	2184	3512	12676	
Calc. Conc.	1.98	4.20	5.23	9.47	
% Error	+2.1	-1.3	-4.2	+3.6	
Calibration Curve:	Slope	Intercept	Corr Coeff	Min Area	Det Lim
	2.1603	1.9935	0.9985	2	0.16

DMDS	1	2	3	4	
Time	08:07	07:53	08:31	07:42	
Conc.	1.44	3.16	4.06	6.80	
Response	548	3377	5040	18623	
Calc. Conc.	1.45	3.24	3.87	6.92	
% Error	+0.3	+2.6	-4.5	+1.8	
Calibration Curve:	Slope	Intercept	Corr Coeff	Min Area	Det Lim
	2.2513	2.3784	0.9988	2	0.12

WESTON SOLUTIONS

CALIBRATION DATA

Number 2

Client: **Bowater**
Location: **Catawba, SC**
Source: **No. 2, 3 SDTV**
Method: **16**

Project Number: **03917.008.014**
Operator: **T. Simpkins**
Date: **29 Jul 2009**

Ambient Temp 72°F **Baro. Press.** 29.26 in. Hg

Compound	**H_2S**	**MeSH**	**DMS**	**DMDS**
Perm. Device ID	T-32759	33-32773	19-32781	89-32782
Perm. Rate, nL/min	510	397	305	226
Ret. Time, sec	18.0	32.5	81.0	131.0
1 Flow 192 **mL/min**	**2.66** ppm	**2.07** ppm	**1.59** ppm	**1.18** ppm
Time: 20:43		**Peak Areas, mv-sec**		
	957	265	267	330
	967	269	282	340
	962	260	268	359
Average Area	**962**	**265**	**272**	**343**
2 Flow 90.6 **mL/min**	**5.63** ppm	**4.38** ppm	**3.36** ppm	**2.50** ppm
Time: 20:26		**Peak Areas, mv-sec**		
	4807	1357	1300	1736
	4930	1392	1327	1756
	4826	1285	1246	1674
Average Area	**4854**	**1345**	**1291**	**1722**
3 Flow 49.0 **mL/min**	**10.4** ppm	**8.10** ppm	**6.21** ppm	**4.62** ppm
Time: 20:08		**Peak Areas, mv-sec**		
	18170	5610	5214	7644
	18537	5826	5285	7751
	18738	5780	5200	7187
Average Area	**18482**	**5739**	**5233**	**7528**

WESTON SOLUTIONS

CALIBRATION SUMMARY

Number 2

Client: **Bowater**
Location: **Catawba, SC**
Source: **No. 2, 3 SDTV**
Method: **16**

Project Number: **03917.008.014**
Operator: **T. Simpkins**
Date: **29 Jul 2009**

H_2S	1	2	3		
Time	20:43	20:26	20:08		
Conc.	2.66	5.63	10.4		
Response	962	4854	18482		
Calc. Conc.	2.66	5.62	10.4		
% Error	+0.1 ✓	-0.2 ✓	+0.1 ✓		
Calibration Curve:	**Slope**	**Intercept**	**Corr Coeff**	**Min Area**	**Det Lim**
	2.1639	2.0639	>0.9999	2	0.15

MeSH	1	2	3		
Time	20:43	20:26	20:08		
Conc.	2.07	4.38	8.10		
Response	265	1345	5739		
Calc. Conc.	2.09	4.30	8.19		
% Error	+0.9 ✓	-1.9 ✓	+1.1 ✓		
Calibration Curve:	**Slope**	**Intercept**	**Corr Coeff**	**Min Area**	**Det Lim**
	2.2499	1.7043	0.9997	2	0.24

DMS	1	2	3		
Time	20:43	20:26	20:08		
Conc.	1.59	3.36	6.21		
Response	272	1291	5233		
Calc. Conc.	1.60	3.29	6.29		
% Error	+1.0 ✓	-2.1 ✓	+1.2 ✓		
Calibration Curve:	**Slope**	**Intercept**	**Corr Coeff**	**Min Area**	**Det Lim**
	2.1612	1.9931	0.9996	2	0.16

DMDS	1	2	3		
Time	20:43	20:26	20:08		
Conc.	1.18	2.50	4.62		
Response	343	1722	7528		
Calc. Conc.	1.19	2.44	4.68		
% Error	+1.1 ✓	-2.5 ✓	+1.4 ✓		
Calibration Curve:	**Slope**	**Intercept**	**Corr Coeff**	**Min Area**	**Det Lim**
	2.2576	2.3627	0.9995	2	0.12

WESTON SOLUTIONS

PERMEATION RATE CALCULATIONS

Client: **Bowater**
Location: **Catawba, SC**
Source: **No. 2, 3 SDTV**
Method: **16**

Project Number: **03917.008.014**
Operator: **T. Simpkins**
Date: **29 Jul 2009**

To calculate the permeation rate in volume units:

$$PR_{nl} = PR_{ng} \times (V_{mol} / W_{mol}) \times [(460° + T_a) / T_s] \times (P_s / P_a)$$

Where:

- PR_{nl} = Permeation Rate, nL/min
- PR_{ng} = Permeation Rate, ng/min
- V_{mol} = Molar Volume of any gas @32°F & 29.92 mm Hg = 22.4 L/mole
- W_{mol} = Molecular Weight of compound
- T_a = Ambient Temperature, °F
- T_s = Standard Temperature = 492°R
- P_s = Standard Pressure = 29.92 in Hg
- P_a = Ambient Pressure, in Hg

To calculate concentration: $C = PR_{nl} / F_d$

Where:

- C = Concentration, ppmv
- PR_{nl} = Permeation Rate, nL/min
- F_d = Diluent Flow Rate, mL/min

T_a = 72°F P_a = 29.26

H_2S: Device T-32759 PR_{ng} = 702 ng/min W_{mol} = 34.08
PR_{nl} = 702 x (22.4 / 34.08) x [(460 + 72) / 492] x (29.92 / 29.26)
= **510** nL/min

MeSH: Device 33-32773 PR_{ng} = 771 ng/min W_{mol} = 48.11
PR_{nl} = 771 x (22.4 / 48.11) x [(460 + 72) / 492] x (29.92 / 29.26)
= **397** nL/min

DMS: Device 19-32781 PR_{ng} = 764 ng/min W_{mol} = 62.14
PR_{nl} = 764 x (22.4 / 62.14) x [(460 + 72) / 492] x (29.92 / 29.26)
= **305** nL/min

DMDS: Device 89-32782 PR_{ng} = 861 ng/min W_{mol} = 94.20
PR_{nl} = 861 x (22.4 / 94.20) x [(460 + 72) / 492] x (29.92 / 29.26)
= **226** nL/min

	H_2S	MeSH	DMS	DMDS
Permeation Device ID	T-32759	33-32773	19-32781	89-32782
Permeation Rate, ng/min	702	771	764	861
Permeation Rate, nL/min	510	397	305	226

WESTON SOLUTIONS

INSTRUMENT DATA

Client:	**Bowater**	Project Number:	**03917.008.014**
Location:	**Catawba, SC**	Operator:	**T. Simpkins**
Source:	**No. 2, 3 SDTV**	Date:	**29 Jul 2009**
Method:	**16**		

File: C:\DATA\Bowater- Catawba\July 2009 TRS\2-3 SDTV 072909 a.trw
Computer: WSAUBHP12 **Trailer:** 261

Analog Input Device Keithley KPCMCIA 16AI Card

Sampling Rate $^{50}/_{1024}$ sec **Data Interval** 0.5 sec

Gas Chromatograph Shimadzu GC-8a ; C1049310310

Gases	Pressure psig	Flow mL/min
H_2	30	50
Air	30	60
Carrier	50	30

Temperatures	
Column	100°C
Detector	120°C

Sample Loop	5"
Column 1	Packed
Column 2	none
Detector Range	10

Injection Cycle

Length 180 sec

Valve Timing	Time, sec
Inject	0
Load/Backflush	90

Injection is triggered by **internal** clock

Integration Parameters

Signal threshold 0.67 mv
Peak detection window ±15 sec
Minimum peak area 2 mv-sec **Minimum peak height** 1 mv above baseline

Dynacalibrator

Chamber Temperature 50.0°C
Ambient Temperature 72°F
Barometric Pressure 29.26 in. Hg

WESTON SOLUTIONS

APPENDIX E
FIELD DATA – NO. 1 LIME KILN

Bowater
Catawba, South Carolina

03917.008.014
No. 1 Lime Kiln

EMISSION CALCULATIONS

	Run 1	Run 2	Run 3	Mean
Date	7/28/09	7/28/09	7/28/09	---
Time Began	1458	1613	1722	---
Time Ended	1607	1715	1824	---
% Oxygen	3.1	3.0	3.7	3.3
Oxygen Reference Concentration, %	10.0	10.0	10.0	10.0
Nitrogen Oxides MW= 46.01				
Concentration, ppm	191.0	172.0	145.0	169.3
Concentration, ppm @10%O2	117.0	104.7	91.9	104.5

RUN SUMMARY

Number 1

Client:	**Bowater**	Project Number:	**03917.008.014**
Location:	**Catawba, SC**	Operator:	**T. Simpkins**
Source:	**Lime Kiln**	Date:	**28 Jul 2009**
Calibration:	**1**		

Analyzer	O2	NOx
Method	EPA 3A	EPA 7E
Conc. Units	%	ppm

Time: 14:58 to 16:07

Run Averages

3.3	192

Pre-run Bias at 12:52

Zero Bias	0.2	1
Span Bias	10.1	126
Span Gas	10.0	125

Post-run Bias at 16:08

Zero Bias	0.3	1
Span Bias	10.1	126
Span Gas	10.0	125

Run averages corrected for the average of the pre-run and post-run bias

3.1	191

153

WESTON SOLUTIONS

RUN SUMMARY

Number 2

Client:	**Bowater**	Project Number:	**03917.008.014**
Location:	**Catawba, SC**	Operator:	**T. Simpkins**
Source:	**Lime Kiln**	Date:	**28 Jul 2009**
Calibration:	**1**		

Analyzer	O2	NOx
Method	EPA 3A	EPA 7E
Conc. Units	%	ppm

Time: 16:13 to 17:15

Run Averages

3.2	174

Pre-run Bias at 16:08

Zero Bias	0.3	1
Span Bias	10.1	126
Span Gas	10.0	125

Post-run Bias at 17:16

Zero Bias	0.2	1
Span Bias	10.1	127
Span Gas	10.0	125

Run averages corrected for the average of the pre-run and post-run bias

3.0	172

158

RUN SUMMARY

Number 3

Client:	**Bowater**	Project Number:	**03917.008.014**
Location:	**Catawba, SC**	Operator:	**T. Simpkins**
Source:	**Lime Kiln**	Date:	**28 Jul 2009**
Calibration:	**1**		

Analyzer	O2	NOx
Method	EPA 3A	EPA 7E
Conc. Units	%	ppm

Time: 17:22 to 18:24

Run Averages

3.9	147

Pre-run Bias at 17:16

Zero Bias	0.2	1
Span Bias	10.1	127
Span Gas	10.0	125

Post-run Bias at 18:25

Zero Bias	0.3	1
Span Bias	10.1	126
Span Gas	10.0	125

Run averages corrected for the average of the pre-run and post-run bias

3.7 √	145 √

RUN DATA

Number 1

Client:	**Bowater**	Project Number:	**03917.008.014**
Location:	**Catawba, SC**	Operator:	**T. Simpkins**
Source:	**Lime Kiln**	Date:	**28 Jul 2009**
Calibration:	**1**		

Time	O2 %	NOx ppm
Starting time 14:58		
	Port A	
	Point 1	
14:59:30	3.4	186
15:00:30	3.3	180
15:01:30	3.4	192
15:02:30	3.5	205
15:03:30	3.6	205
	Point 2	
15:04:30	3.4	199
15:05:30	3.4	204
15:06:30	3.4	194
15:07:30	3.3	183
15:08:30	3.5	196
	Point 3	
15:09:30	3.5	201
15:10:30	3.6	208
15:11:30	3.6	210
15:12:30	3.5	210
15:13:30	3.4	201
	Point 4	
15:14:30	3.3	188
15:15:30	3.4	203
15:16:30	3.5	205
15:17:30	3.6	209
15:18:30	3.6	207
	Point 5	
15:19:30	3.4	205
15:20:30	3.3	194
15:21:30	3.2	182
15:22:30	3.3	187
15:23:30	3.3	197
	Point 6	
15:24:30	3.5	204

WESTON SOLUTIONS

RUN DATA

Number 1

Client:	**Bowater**	Project Number:	**03917.008.014**
Location:	**Catawba, SC**	Operator:	**T. Simpkins**
Source:	**Lime Kiln**	Date:	**28 Jul 2009**
Calibration:	**1**		

Time	O2 %	NOx ppm
15:25:30	3.5	207
15:26:30	3.4	202
15:27:30	3.4	196
15:28:30	3.3	186
15:29:30	3.3	192
15:30:30	3.2	194
15:31:30	3.3	193
15:32:30	3.2	188
15:33:30	3.2	182
15:34:30	3.2	175
	Port B	
	Point 1	
15:38:30	3.4	190
15:39:30	3.3	185
15:40:30	3.2	169
15:41:30	3.2	161
15:42:30	3.2	155
	Point 2	
15:43:30	3.2	172
15:44:30	3.2	187
15:45:30	3.4	191
15:46:30	3.3	189
15:47:30	3.2	176
	Point 3	
15:48:30	3.2	177
15:49:30	3.2	180
15:50:30	3.2	184
15:51:30	3.3	192
15:52:30	3.3	200
	Point 4	
15:53:30	3.4	203
15:54:30	3.2	197
15:55:30	3.2	194

WESTON SOLUTIONS

RUN DATA

Number 1

Client:	**Bowater**	Project Number:	**03917.008.014**
Location:	**Catawba, SC**	Operator:	**T. Simpkins**
Source:	**Lime Kiln**	Date:	**28 Jul 2009**
Calibration:	**1**		

Time	O2 %	NOx ppm
15:56:30	3.2	192
15:57:30	3.3	204
	Point 5	
15:58:30	3.4	208
15:59:30	3.5	207
16:00:30	3.3	203
16:01:30	3.2	187
16:02:30	3.1	175
	Point 6	
16:03:30	3.1	171
16:04:30	3.2	180
16:05:30	3.2	181
16:06:30	3.3	194
16:07:30	3.3	193
Run Avg	**3.3**	**192**

158

RUN DATA

Number 2

Client:	**Bowater**	Project Number:	**03917.008.014**
Location:	**Catawba, SC**	Operator:	**T. Simpkins**
Source:	**Lime Kiln**	Date:	**28 Jul 2009**
Calibration:	**1**		

Time	O2 %	NOx ppm
Starting time 16:13		
	Port B	
	Point 1	
16:14:38	3.2	186
16:15:38	3.2	174
16:16:38	3.2	167
16:17:38	3.2	165
16:18:38	3.2	181
	Point 2	
16:19:38	3.3	185
16:20:38	3.2	175
16:21:38	3.2	178
16:22:38	3.2	174
16:23:38	3.2	166
	Point 3	
16:24:38	3.2	166
16:25:38	3.2	176
16:26:38	3.2	188
16:27:38	3.3	193
16:28:38	3.2	184
	Point 4	
16:29:38	3.2	178
16:30:38	3.2	167
16:31:38	3.2	164
16:32:38	3.2	169
16:33:38	3.2	166
	Point 5	
16:34:38	3.2	167
16:35:38	3.2	169
16:36:38	3.2	158
16:37:38	3.2	152
16:38:38	3.2	150
	Point 6	
16:39:38	3.2	160

RUN DATA

Number 2

Client:	**Bowater**	Project Number:	**03917.008.014**
Location:	**Catawba, SC**	Operator:	**T. Simpkins**
Source:	**Lime Kiln**	Date:	**28 Jul 2009**
Calibration:	**1**		

Time	O2 %	NOx ppm
16:40:38	3.2	165
16:41:38	3.2	163
16:42:38	3.2	154
16:43:38	3.2	161
16:44:38	3.2	151
	Port A	
	Point 1	
16:46:38	3.2	157
16:47:38	3.2	166
16:48:38	3.3	172
16:49:38	3.3	180
16:50:38	3.2	168
	Point 2	
16:51:38	3.2	163
16:52:38	3.2	165
16:53:38	3.3	174
16:54:38	3.3	184
16:55:38	3.4	193
	Point 3	
16:56:38	3.3	188
16:57:38	3.2	182
16:58:38	3.2	175
16:59:38	3.2	169
17:00:38	3.2	168
	Point 4	
17:01:38	3.2	184
17:02:38	3.3	187
17:03:38	3.2	186
17:04:38	3.2	181
17:05:38	3.2	178
	Point 5	
17:06:38	3.2	180
17:07:38	3.2	191

RUN DATA

Number 2

Client:	**Bowater**	Project Number:	**03917.008.014**
Location:	**Catawba, SC**	Operator:	**T. Simpkins**
Source:	**Lime Kiln**	Date:	**28 Jul 2009**
Calibration:	**1**		

Time	O2 %	NOx ppm
17:08:38	3.2	191
17:09:38	3.3	192
17:10:38	3.2	186
	Point 6	
17:11:38	3.2	187
17:12:38	3.2	183
17:13:38	3.2	177
17:14:38	3.2	183
17:15:38	3.2	186
Run Avg	**3.2**	**174**

153

RUN DATA

Number 3

Client:	**Bowater**	Project Number:	**03917.008.014**
Location:	**Catawba, SC**	Operator:	**T. Simpkins**
Source:	**Lime Kiln**	Date:	**28 Jul 2009**
Calibration:	**1**		

Time	O2 %	NOx ppm
Starting time 17:22		
	Port A	
	Point 1	
17:23:54	3.2	174
17:24:54	3.2	171
17:25:54	3.2	167
17:26:54	3.2	162
	Point 2	
17:27:54	3.2	161
17:28:54	3.2	172
17:29:54	3.2	164
17:30:54	3.3	161
17:31:54	3.2	164
	Point 3	
17:32:54	3.2	161
17:33:54	3.2	156
17:34:54	3.2	160
17:35:54	3.2	161
17:36:54	3.2	164
	Point 4	
17:37:54	3.3	169
17:38:54	3.2	172
17:39:54	3.2	164
17:40:54	3.2	153
17:41:54	3.2	152
	Point 5	
17:42:54	3.2	157
17:43:54	3.3	165
17:44:54	3.3	163
17:45:54	3.2	152
17:46:54	3.2	140
	Point 6	
17:47:54	3.2	133

158

WESTON SOLUTIONS

RUN DATA

Number 3

Client:	**Bowater**	Project Number:	**03917.008.014**
Location:	**Catawba, SC**	Operator:	**T. Simpkins**
Source:	**Lime Kiln**	Date:	**28 Jul 2009**
Calibration:	**1**		

Time	O2 %	NOx ppm
17:48:54	3.2	132
17:49:54	3.2	141
17:50:54	3.2	143
17:51:54	3.2	141
17:52:54	3.2	138
17:53:54	3.2	132
17:54:54	3.2	131
	Port B	
	Point 1	
17:56:54	3.3	143
17:57:54	3.5	149
17:58:54	4.1	156
17:59:54	4.2	154
18:00:54	4.3	147
	Point 2	
18:01:54	4.4	142
18:02:54	4.5	135
18:03:54	4.5	141
18:04:54	4.7	143
18:05:54	4.7	146
	Point 3	
18:06:54	4.7	145
18:07:54	4.8	135
18:08:54	4.8	129
18:09:54	4.8	126
18:10:54	4.8	136
	Point4	
18:11:54	4.8	143
18:12:54	4.7	142
18:13:54	4.7	143
18:14:54	4.8	136
18:15:54	4.7	130
	Point 5	
18:16:54	4.8	121

158

WESTON SOLUTIONS

RUN DATA

Number 3

Client:	**Bowater**	Project Number:	**03917.008.014**
Location:	**Catawba, SC**	Operator:	**T. Simpkins**
Source:	**Lime Kiln**	Date:	**28 Jul 2009**
Calibration:	**1**		

Time	O2 %	NOx ppm
18:17:54	4.7	122
18:18:54	4.8	135
18:19:54	4.8	136
18:20:54	4.7	134
	Point 6	
18:21:54	4.7	136
18:22:54	4.7	133
18:23:54	4.7	134
18:24:54	4.7	143
Run Avg	**3.9**	**147**

VSB

WESTON SOLUTIONS

RUN DATA

Number 4

Client:	**Bowater**	Project Number:	**03917.008.014**
Location:	**Catawba, SC**	Operator:	**T. Simpkins**
Source:	**Lime Kiln**	Date:	**28 Jul 2009**
Calibration:	**1**		

Time	O2 %	NOx ppm
Starting time 18:44		
18:45:04	21.2	44
18:46:04	21.2	45
18:47:04	21.2	45
NO2 45.2 ppm		
SG 9111909		
18:48:04	21.2	45
18:49:04	21.2	46
Run Avg	**21.2**	**45**

WESTON SOLUTIONS

BIAS

Number 1

Client:	**Bowater**	Project Number:	**03917.008.014**
Location:	**Catawba, SC**	Operator:	**T. Simpkins**
Source:	**Lime Kiln**	Date:	**28 Jul 2009**

Starting Time: 12:52

O2
Method: EPA 3A
Span Conc. 19.9 %

Bias Results

Gas	Cal %	Bias %	Bias Error
Zero	0.0	0.2	1.0%
Span	10.0	10.1	0.5%

NOx
Method: EPA 7E
Span Conc. 252 ppm

Bias Results

Gas	Cal ppm	Bias ppm	Bias Error
Zero	0	1	0.4%
Span	125	126	0.4%

BIAS AND CALIBRATION DRIFT

Number 2

Client:	**Bowater**	Project Number:	**03917.008.014**
Location:	**Catawba, SC**	Operator:	**T. Simpkins**
Source:	**Lime Kiln**	Date:	**28 Jul 2009**

Starting Time: 16:08

O2
Method: EPA 3A
Span Conc. 19.9 %

Bias Results

Gas	Cal %	Bias %	Bias Error
Zero	0.0	0.3	1.5% ✓
Span	10.0	10.1	0.5% ✓

Calibration Drift

Gas	Initial* %	Final %	Drift
Zero	0.2	0.3	0.5% ✓
Span	10.1	10.1	0.0% ✓

*Bias No. 1

NOx
Method: EPA 7E
Span Conc. 252 ppm

Bias Results

Gas	Cal ppm	Bias ppm	Bias Error
Zero	0	1	0.4% ✓
Span	125	126	0.4% ✓

Calibration Drift

Gas	Initial* ppm	Final ppm	Drift
Zero	1	1	0.0% ✓
Span	126	126	0.0% ✓

*Bias No. 1

WESTON SOLUTIONS

BIAS AND CALIBRATION DRIFT

Number 3

Client:	**Bowater**	Project Number:	**03917.008.014**
Location:	**Catawba, SC**	Operator:	**T. Simpkins**
Source:	**Lime Kiln**	Date:	**28 Jul 2009**

Starting Time: 17:16

O2
Method: EPA 3A
Span Conc. 19.9 %

Bias Results

Gas	Cal %	Bias %	Bias Error
Zero	0.0	0.2	1.0% ✓
Span	10.0	10.1	0.5% ✓

Calibration Drift

Gas	Initial* %	Final %	Drift
Zero	0.3	0.2	-0.5% ✓
Span	10.1	10.1	0.0% ✓

*Bias No. 2

NOx
Method: EPA 7E
Span Conc. 252 ppm

Bias Results

Gas	Cal ppm	Bias ppm	Bias Error
Zero	0	1	0.4% ✓
Span	125	127	0.8% ✓

Calibration Drift

Gas	Initial* ppm	Final ppm	Drift
Zero	1	1	0.0% ✓
Span	126	127	0.4% ✓

*Bias No. 2

158

WESTON SOLUTIONS

BIAS AND CALIBRATION DRIFT

Number 4

Client:	**Bowater**	Project Number:	**03917.008.014**
Location:	**Catawba, SC**	Operator:	**T. Simpkins**
Source:	**Lime Kiln**	Date:	**28 Jul 2009**

Starting Time: 18:25

O2
Method: EPA 3A
Span Conc. 19.9 %

Bias Results

Gas	Cal %	Bias %	Bias Error
Zero	0.0	0.3	1.5% ✓
Span	10.0	10.1	0.5% ✓

Calibration Drift

Gas	Initial* %	Final %	Drift
Zero	0.2	0.3	0.5% ✓
Span	10.1	10.1	0.0% ✓

*Bias No. 3

NOx
Method: EPA 7E
Span Conc. 252 ppm

Bias Results

Gas	Cal ppm	Bias ppm	Bias Error
Zero	0	1	0.4% ✓
Span	125	126	0.4% ✓

Calibration Drift

Gas	Initial* ppm	Final ppm	Drift
Zero	1	1	0.0% ✓
Span	127	126	-0.4% ✓

*Bias No. 3

WESTON SOLUTIONS

CALIBRATION

Number 1

Client:	**Bowater**	Project Number:	**03917.008.014**
Location:	**Catawba, SC**	Operator:	**T. Simpkins**
Source:	**Lime Kiln**	Date:	**28 Jul 2009**

Starting Time: 12:18

O2

Method: EPA 3A

Calibration Type: Linear Regression

Calibration Results

%	Cylinder ID	Result, mv
Zero	-	23
10.0	CC 195528	420
19.9	SG 9151644	808

Curve Coefficients

Slope	Intercept	Corr. Coeff.
39.45	23.8	>0.9999

NOx

Method: EPA 7E

Calibration Type: Linear Regression

Calibration Results

ppm	Cylinder ID	Result, mv
Zero	-	-9
125	CC 208946	4165
252	CC 221419	8447

Curve Coefficients

Slope	Intercept	Corr. Coeff.
33.56	-15.9	>0.9999

CALIBRATION ERROR

Number 1

Client:	**Bowater**	Project Number:	**03917.008.014**
Location:	**Catawba, SC**	Operator:	**T. Simpkins**
Source:	**Lime Kiln**	Date:	**28 Jul 2009**

Starting Time: 12:18

O2

Method: EPA 3A

Slope 39.45 **Intercept** 23.8

Standard, %	Response, mV	%	Error, %
Zero	23	0.0	0.0
10.00	420	10.0	0.0
19.9	808	19.9	0.0

NOx

Method: EPA 7E

Slope 33.56 **Intercept** -15.9

Standard, ppm	Response, mV	ppm	Error, %
Zero	-9	0	0.0
125	4165	125	0.0
252	8447	252	0.0

ANALYZER INFORMATION

Number 1

Client:	**Bowater**	Project Number:	**03917.008.014**
Location:	**Catawba, SC**	Operator:	**T. Simpkins**
Source:	**Lime Kiln**	Date:	**28 Jul 2009**

File Name: C:\Data\Bowater- Catawba, SC\July 2009 CEM\LK 072809.cem
Computer: WSAUB60 **Trailer:** 261

Analog Input Device: **Keithley KPCMCIA 16AI Card**

Channel 1

Analyte	**O2**
Method	**EPA 3A**, Using Bias
Analyzer Make, Model & Serial No.	**Servomex; 0144001/4302**
Full-Scale Output, mv	**1000**
Span Concentration, %	**19.9**

Channel 4

Analyte	**NOx**
Method	**EPA 7E**, Using Bias
Analyzer Make, Model & Serial No.	**CAI 400-CLD; 6N06002**
Full-Scale Output, mv	**10000**
Span Concentration, ppm	**252**

APPENDIX F
FIELD DATA – NO. 3 RECOVERY FURNACE

PARTICULATE MATTER

Bowater
Catawba, SC

03917.008.014
No. 3 Recovery Furnace

ISOKINETIC CALCULATIONS

Run Number		1	2	3	Mean
Date		7/29/2009	7/29/2009	7/29/2009	---
Time Began		1257	1435	1623	---
Time Ended		1400	1537	1726	---
		INPUT DATA			
Sampling Time, min	(Theta)	60.0	60	60	60
Stack Diameter, in.	(Dia.)	127.00	127.00	127.00	127.00
Barometric Pressure, in. Hg	(Pb)	29.23	29.23	29.23	29.23
Static Pressure, in. H2O	(Pg)	-0.95	-0.95	-0.95	-0.95
Pitot Tube Coefficient	(Cp)	0.84	0.84	0.84	0.84
Meter Correction Factor	(Y)	0.9960	0.9960	0.9960	0.9960
Orifice Calibration Value	(Delta H@)	1.9320	1.9320	1.9320	1.9320
Nozzle Diameter, in.	(Dn)	0.212	0.212	0.212	0.212
Meter Volume, ft^3	(Vm)	38.283	38.754	38.913	38.650
Meter Temperature, °F	(Tm)	102.0	108.0	105.0	105.0
Meter Temperature, °R	(Tm-R)	562.0	568.0	565.0	565.0
Meter Orifice Pressure, in. H2O	(Delta H)	1.295	1.316	1.337	1.316
Ave Sq Rt Orifice Press, (in. H2O)^½	((Delta H)½)avg)	1.136	1.145	1.154	1.145
Volume H2O Collected, mL	(Vlc)	229.3	245.5	247.0	240.6
CO2 Concentration, %	(CO2)	13.9	13.4	13.5	13.6
O2 Concentration, %	(O2)	5.9	6.3	6.2	6.1
Ave Sq Rt Velo Head, (in. H2O)^½	((Delta P)½)avg)	1.116	1.147	1.158	1.140
Stack Temperature, °F	(Ts)	346.0	342.0	342.4	343.5
Stack Temperature, °R	(Ts-R)	806.0	802.0	802.4	803.5
Particulate Collected, g	(Mn)	0.0313	0.0418	0.0359	0.0363
		CALCULATED DATA			
Nozzle Area, in^2	(An)	3.53E-02	3.53E-02	3.53E-02	0.04
Stack Area, ft^2	(As)	87.97	87.97	87.97	87.97
Stack Pressure, in. Hg	(Ps)	29.16	29.16	29.16	29.16
Meter Pressure, in. Hg	(Pm)	29.33	29.33	29.33	29.33
Standard Meter Volume, ft^3	(Vmstd)	35.097	35.155	35.489	35.247
Standard Water Volume, ft^3	(Vwstd)	10.793	11.556	11.626	11.325
Moisture Fraction (Measured)	(BWS)	0.235	0.247	0.247	0.243
Moisture Fraction (lower sat/meas)	(BWS)	0.235	0.247	0.247	0.243
Mol. Wt. of Dry Gas, lb/lb-mole	(Md)	30.46	30.40	30.41	30.42
Mol. Wt. of Stack Gas, lb/lb-mole	(Ms)	27.53	27.33	27.35	27.40
Average Stack Gas Velocity, ft/sec	(Vs)	80.30	82.63	83.42	82.12
Stack Gas Flow, actual, ft^3/min	(Qa)	423856	436136	440293	433428
Stack Gas Flow, Std , ft^3/min	(Qs)	206882	210527	212603	210004
Isokinetic Sampling Rate, %	(%I)	101.5	99.9	99.9	100.4
Particulate Conc @ Std Cond, gr/ft^3	(Cs)	0.014	0.018	0.016	0.016
Particulate Conc @ % O2, gr/ft^3 8	(Cs__)	0.012	0.016	0.014	0.014
Particulate Emission, lb/hr	(PMR)	24.397	33.101	28.439	28.65
Calibration check	(Yqa)	0.9772	0.9792	0.9800	0.979
Percent difference from Y					-1.73%

CLIENT	:	Balance ID:	Mettler AE163
WESTON W.O. No.	:	Density of Acetone (g/mL):	0.7848
Date Received	:	Lab Ambient Temp (F):	68.7
Analyst	:	Lab Rel Humidity (%):	48
		Barometric Pressure (Hg):	29.23

Source				
Field Run No.	**ONE**	**TWO**	**THREE**	**FIELD BLANK**
LIQUID FRACTION				
Probe Wash ID	**DA 844**	**DA 845**	**DA 846**	**DA 875**
Beaker ID	70-06	71-06	72-06	77-06
Liquid Volume (mL)	90	70	70	65
Initial Beaker Weights (g)				
Weight #1	105.8299	117.9308	113.4341	112.1425
Weight #2	105.8297	117.9312	113.4343	112.1426
Average Initial Weight (g)	**105.8298**	**117.9310**	**113.4342**	**112.1426**
Final Beaker Weights (g)				
Weight #1	105.8342	117.9420	113.4378	112.1422
Weight #2	105.8339	117.9420	113.4375	112.1427
Average Final Weight (g)	**105.8341**	**117.9420**	**113.4377**	**112.1425**
Final-Initial Beaker Wts. (g)	0.0043	0.0110	0.0035	-0.0001
Sample/Blank Volume Ratio	1.3846	1.0769	1.0769	
Liquid Blank Correction (g)	-0.0001	-0.0001	-0.0001	
Liquid Particulate Weight (g)	**0.0044**	**0.0111**	**0.0036**	**-0.0001**
FILTER FRACTION				
Filter ID	**DA 844**	**DA 845**	**DA 846**	**DA 875**
Initial Filter Weights (g)				
Weight #1	0.3929	0.3982	0.3968	0.3962
Weight #2	0.3928	0.3980	0.3964	0.3963
Average Initial Weight (g)	**0.3929**	**0.3981**	**0.3966**	**0.3963**
Final Filter Weights (g)				
Weight #1	0.4198	0.4289	0.4290	0.3965
Weight #2	0.4198	0.4287	0.4288	0.3966
Average Final Weight (g)	**0.4198**	**0.4288**	**0.4289**	**0.3966**
Final-Initial Filter Wts. (g)	0.0269	0.0307	0.0323	0.0003
Filter Blank (g)	0.0003	0.0003	0.0003	
Filter Particulate Weight (g)	**0.0269**	**0.0307**	**0.0323**	
SUMMARY				
Filter Particulate Weight (g)	**0.0269**	**0.0307**	**0.0323**	
Liquid Particulate Weight (g)	**0.0044**	**0.0111**	**0.0036**	
Net Particulate Weight (g)	**0.0313**	**0.0418**	**0.0359**	

Sample Recovery Solution **Water**

Weight Percent of Blank Liquid Fraction **-0.0002%**

Note: If the blank liquid fraction has a residue weight percent of greater than 0.001 percent, then the samples are not blank corrected.

ISOKINETIC FIELD DATA SHEET

Method 5

			Stack Conditions Assumed	Stack Conditions Actual			
Client	Bowater				Meter Box ID	A024	
W.O.#	03917.008.014				Meter Box Y	0.996	
Project ID	N/A	% Moisture	26		Meter Box Del H	1.932	
Mode/Source ID	N/A	Impinger Vol (ml)		220	Probe ID / Length	PP12-1 12"	
Samp. Loc. ID	Catawba, Sc	Silica gel (g)		9.3	Probe Material	SS	
Run No.ID	1	CO2, % by Vol	14	13.9	Pitot / Thermocouple ID	PR12-1	
Test Method ID	M5	O2, % by Vol	5	5.9	Pitot Coefficient	0.84	
Filter No.	DA0844	Temperature (°F)	353		Nozzle ID	.212	
Source/Location	#3 Recovery Furnace	Meter Temp (°F)	90		Avg Nozzle Dia (in)	.212	
Sample Date	29-Jul-09	Static Press (in H_2O)		-.95	Area of Stack (ft²)	87.97	
Baro. Press (in Hg)	29.23				Sample Time	60	
Operator	JA/PG	Ambient Temp (°F)	78		Total Traverse Pts	24	

K Factor .97

Leak Checks	Initial	Mid-Point	Final
Sample Train (ft³)	.004		.002
Leak Check @ (in Hg)	10		7
Pitot good	yes / no	yes / no	yes / no
Orsat good	yes / no	yes / no	yes / no

Temp Check	Pre-Test Set	Post-Test Set
Meter Box Temp		
Reference Temp		
Pass/Fail (+/- 2°)	Pass / Fail	Pass / Fail
Temp Change Response ?	yes / no	yes / no

TRAVERSE POINT NO.	SAMPLE TIME (min)	CLOCK TIME (plant time)	VELOCITY PRESSURE Delta P (in H2O)	ORIFICE PRESSURE Delta H (in H2O)	DRY GAS METER READING (ft³)	STACK TEMP (°F)	DGM INLET TEMP (°F)	DGM OUTLET TEMP (°F)	PROBE TEMP (°F)	FILTER BOX TEMP (°F)	IMPINGER EXIT TEMP (°F)	SAMPLE TRAIN VAC (in Hg)		COMMENTS
	0	1257			257.079									
A-1	2.5		1.1	1.2	258.6	342	96	N/A	254	255	68	3		
2	5		1.1	1.2	260.1	350	96		255	256	66	3		
3	7.5		1.2	1.3	261.7	350	99		255	257	63	3.5		
4	10		1.2	1.3	263.3	343	100		258	255	63	3.5		
5	12.5		1.1	1.2	264.8	344	101		258	257	62	3.5		
6	15		1.1	1.2	266.3	346	101		251	256	62	4		
7	17.5		1.3	1.3	267.6	352	102		250	259	62	4		
8	20		1.4	1.4	269.7	350	102		256	252	61	5		
9	22.5		1.5	1.5	271.4	349	102		247	252	61	5		
10	25		1.5	1.5	273.1	343	102		249	260	60	5		
11	27.5		1.4	1.4	274.7	344	102		252	255	60	5		
12	30		1.4	1.4	276.413	354	104		249	253	60	5		
B-1	32.5		1.4	1.4	278.1	342	98		248	252	64	4		
2	35		1.4	1.4	279.4	344	101		251	251	63	4		
3	37.5		1.5	1.5	281.4	343	104		253	252	62	5		
4	40		1.4	1.4	283.1	344	105		242	245	62	5		
5	42.5		1.4	1.4	284.8	345	104		243	248	62	5		
6	45		1.2	1.3	286.4	345	103		248	255	61	5		
7	47.5		1.2	1.3	288.0	343	105		252	254	60	5		
8	50		1.1	1.2	289.5	343	104		250	256	60	4		
9	52.5		1.1	1.2	291.1	348	103		248	251	60	4		
10	55		1.1	1.2	292.7	348	103		250	254	59	4		
11	57.5		.95	.92	293.9	343	104		244	256	60	4		
12	60	1400	1.0	.97	295.362	343	104		251	254	61	4		
			Avg Sqrt Delta P 1.116	Avg Delta H 1.295	Total Volume J 38.283	Avg Ts 346	Avg Tm 102		Min/Max 242/258	Min/Max 245/260	Max Temp 68	Max Vac 5		Max Temp
			Avg. 1.252	Avg Sqrt Del H 1.136	Comments:									

Iso - 101.5
moist - 23.5
Scfm - 206878.9
Svol - 35.097

WESTON MANAGERS DESIGNERS/CONSULTANTS

ISOKINETIC FIELD DATA SHEET

Method 5

Client	Bowater
W.O.#	03917.008.014
Project ID	N/A
Mode/Source ID	N/A
Samp. Loc. ID	Catawba, Sc
Run No.ID	2
Test Method ID	M5
Filter No.	DA0845
Source/Location	#3 Recovery Furnace
Sample Date	29-Jul-09
Baro. Press (in Hg)	29.23
Operator	JA/PG

Stack Conditions

	Assumed	Actual
% Moisture	26	
Impinger Vol (ml)		238
Silica gel (g)		7.5
CO2, % by Vol	14	13.4
O2, % by Vol	6	6.3
Temperature (°F)	350	
Meter Temp (°F)	162	
Static Press (in H_2O)		-.95
Ambient Temp (°F)	85	

Meter Box ID	A024
Meter Box Y	0.996
Meter Box Del H	1.932
Probe ID / Length	PR12-1 12"
Probe Material	SS
Pitot / Thermocouple ID	PR12-1
Pitot Coefficient	0.84
Nozzle ID	.212
Avg Nozzle Dia (in)	.212
Area of Stack (ft²)	87.97
Sample Time	60
Total Traverse Pts	24

K Factor .97

Leak Checks	Initial	Mid-Point	Final
Sample Train (ft³)	.008		.008
Leak Check @ (in Hg)	10		7
Pitot good	yes / no	yes / no	yes / no
Orsat good	yes / no	yes / no	yes / no

Temp Check	Pre-Test Set	Post-Test Set
Meter Box Temp		
Reference Temp		
Pass/Fail (+/- 2°)	Pass / Fail	Pass / Fail
Temp Change Response ?	yes / no	yes / no

TRAVERSE POINT NO.	SAMPLE TIME (min)	CLOCK TIME (plant time)	VELOCITY PRESSURE Delta P (in H2O)	ORIFICE PRESSURE Delta H (in H2O)	DRY GAS METER READING (ft³)	STACK TEMP (°F)	DGM INLET TEMP (°F)	DGM OUTLET TEMP (°F)	PROBE TEMP (°F)	FILTER BOX TEMP (°F)	IMPINGER EXIT TEMP (°F)	SAMPLE TRAIN VAC (in Hg)		COMMENTS
	0	1435			295.886									
B A-1	2.5		1.4	1.4	297.6	342	103	N/A	253	249	68	3		
2	5		1.5	1.5	298.3	343	106		254	250	66	3.5		
3	7.5		1.5	1.5	301.0	343	109		244	251	66	3.5		
4	10		1.5	1.5	302.7	343	109		244	251	63	3.5		
5	12.5		1.5	1.5	304.4	343	110		251	248	63	4		
6	15		1.4	1.4	306.1	343	109		247	250	63	4		
7	17.5		1.2	1.2	307.6	342	110		245	249	62	3.5		
8	20		1.2	1.2	309.2	343	109		250	254	62	3.5		
9	22.5		1.1	1.1	310.7	343	108		248	254	61	3.5		
10	25		1.1	1.1	312.1	343	108		244	252	61	3.5		
11	27.5		1.0	.97	313.5	342	107		250	248	60	3		
12	30		1.0	.97	314.965	341	108		247	254	60	3		
A B-1	32.5		1.2	1.2	316.5	341	106		248	254	66	3.5		
2	35		1.2	1.2	318.0	342	107		252	253	65	3.5		
3	37.5		1.3	1.3	319.6	342	107		245	252	64	4		
4	40		1.3	1.3	321.2	342	109		246	253	63	4		
5	42.5		1.3	1.3	322.8	342	109		254	255	63	4		
6	45		1.2	1.2	324.4	342	107		248	253	63	4		
7	47.5		1.4	1.4	326.0	342	108		244	248	62	4		
8	50		1.5	1.5	327.8	342	107		255	251	62	4.5		
9	52.5		1.6	1.55	329.5	342	107		253	255	61	4.5		
10	55		1.5	1.5	331.3	341	108		246	251	63	4.5		
11	57.5		1.4	1.4	332.9	340	108		248	257	64	4		
12	60	1538	1.4	1.4	334.840	342	107		248	258	65	4		
			Avg Sqrt Delta P 1.147	Avg Delta H 1.316	Total Volume 38.754	Avg Ts 342	Avg Tm 108		Min/Max 244/255	Min/Max 248/258	Max Temp 68	Max Vac 4.5	Max Temp	

Avg. 1.321

Avg Sqrt Del H 1.145

Comments:

Iso - 99.9
moist - 24.7
SCFM - 210524.3
Svol - 35.155

WESTON MANAGERS DESIGNERS/CONSULTANTS

ISOKINETIC FIELD DATA SHEET

Method 5

Client	Bowater
W.O.#	03917.008.014
Project ID	N/A
Mode/Source ID	N/A
Samp. Loc. ID	Catawba, Sc
Run No.ID	3
Test Method ID	M5
Filter No.	DA0846
Source/Location	#3 Recovery Furnace
Sample Date	29-Jul-09
Baro. Press (in Hg)	29.23
Operator	JA / PG

Stack Conditions

	Assumed	Actual
% Moisture	26	
Impinger Vol (ml)		240
Silica gel (g)		7
CO2, % by Vol	6.4	13.5
O2, % by Vol	6	6.2
Temperature (°F)	145	
Meter Temp (°F)	108	
Static Press (in H_2O)		-.95
Ambient Temp (°F)	85	

Meter Box ID	A024
Meter Box Y	0.996
Meter Box Del H	1.932
Probe ID / Length	PR-12-1 12'
Probe Material	SS
Pitot / Thermocouple ID	PR-12-1
Pitot Coefficient	0.84
Nozzle ID	.212
Avg Nozzle Dia (in)	.212
Area of Stack (ft^2)	87.97
Sample Time	60
Total Traverse Pts	24

K Factor .97

Leak Checks	Initial	Mid-Point	Final
Sample Train (ft^3)	.010		.005
Leak Check @ (in Hg)	10		7
Pitot good	yes / no	yes / no	yes / no
Orsat good	yes / no	yes / no	yes / no

Temp Check	Pre-Test Set	Post-Test Set
Meter Box Temp		
Reference Temp		
Pass/Fail (+/- 2°)	Pass / Fail	Pass / Fail
Temp Change Response ?	yes / no	yes / no

TRAVERSE POINT NO.	SAMPLE TIME (min)	CLOCK TIME (plant time)	VELOCITY PRESSURE Delta P (in H2O)	ORIFICE PRESSURE Delta H (in H2O)	DRY GAS METER READING (ft³)	STACK TEMP (°F)	DGM INLET TEMP (°F)	DGM OUTLET TEMP (°F)	PROBE TEMP (°F)	FILTER BOX TEMP (F)	IMPINGER EXIT TEMP (°F)	SAMPLE TRAIN VAC (in Hg)		COMMENTS
	0	1623			335.219									
A-1	2.5		1.2	1.2	336.8	344	98	N/A	248	250	68	3		
2	5		1.2	1.2	338.3	343	98		253	251	66	3		
3	7.5		1.3	1.3	339.9	344	100		251	253	63	3		
4	10		1.3	1.3	341.5	343	103		254	251	61	3.5		
5	12.5		1.3	1.3	343.1	343	104		250	254	60	3.5		
6	15		1.3	1.3	344.6	343	105		246	253	61	3.5		
7	17.5		1.4	1.4	346.3	342	107		245	250	61	4		
8	20		1.5	1.5	348.0	342	106		252	252	61	4		
9	22.5		1.6	1.55	349.8	343	107		243	256	61	4.5		
10	25		1.6	1.55	351.5	342	105		244	253	60	4.5		
11	27.5		1.4	1.4	353.2	342	107		252	250	60	4.5		
12	30		1.4	1.4	354.905	342	105		243	255	60	4.5		
B-1	32.5		1.5	1.5	356.6	342	101		241	248	66	4		
2	35		1.5	1.5	358.3	343	102		243	249	65	4		
3	37.5		1.5	1.5	360.0	343	104		255	254	62	4		
4	40		1.6	1.55	361.7	342	106		255	254	64	4.5		
5	42.5		1.5	1.5	363.5	342	107		250	254	60	4.5		
6	45		1.4	1.4	365.1	342	108		255	257	59	4		
7	47.5		1.2	1.2	366.7	342	110		253	251	60	4		
8	50		1.3	1.3	368.3	342	109		246	254	61	4		
9	52.5		1.2	1.2	369.8	342	107		250	252	61	4		
10	55		1.1	1.1	371.3	342	106		252	252	62	3.5		
11	57.5		1.0	.97	372.7	341	107		242	253	61	3		
12	60	1726	1.0	.97	374.132	341	105		250	251	62	3		
			Avg Sqrt Delta P 1.158	Avg Delta H 1.337	Total Volume 38.913	Avg Ts 342.4	Avg Tm 105		Min/Max 241/255	Min/Max 248/257	Max Temp 68	Max Vac 4.5	Max Temp	
			Avg. 1.346	Avg Sqrt Del H 1.154										

WESTON MANAGERS DESIGNERS/CONSULTANTS

Comments:

Iso- 99.9
moist- 24.7
SCFm- 212601.2
SVOI- 35.489

158

97

SAMPLE RECOVERY FIELD DATA

Method 5

Client	Bowater	W.O. #	03917.008.014
Location/Plant	Catawba, Sc	Source & Location	#3 Recovery Furnace

Run No. 1 — Sample Date 7/29/2009 — Recovery Date 7/29/2009

Sample I.D. — Analyst JA/PG — Filter Number DA0844

	Impinger									
	1	2	3	4	5	6	7	Imp.Total	8	Total
Contents	H20	H2O	Empty						Silica Gel	
Final	314	104	2						346.6	
Initial	100	100	0						337.3	
Gain	214	4	2					220	9.3	229.3

Impinger Color: clear — Labeled? ✓

Silica Gel Condition: spent — Sealed? ✓

Run No. 2 — Sample Date 7/29/2009 — Recovery Date 7/29/2009

Sample I.D. — Analyst JA/PG — Filter Number DA0845

	Impinger									
	1	2	3	4	5	6	7	Imp.Total	8	Total
Contents	H2O	H2O	Empty						Silica Gel	
Final	332	104	2						353.8	
Initial	100	100	0						346.3	
Gain	232	4	2					238	7.5	245.5

Impinger Color: clear — Labeled? ✓

Silica Gel Condition: good — Sealed? ✓

Run No. 3 — Sample Date 7/29/2009 — Recovery Date 7/29/2009

Sample I.D. — Analyst JA/PG — Filter Number DA0846

	Impinger									
	1	2	3	4	5	6	7	Imp.Total	8	Total
Contents	H2O	H2O	Empty						Silica Gel	
Final	334	104	2						360.8	
Initial	100	100	0						353.8	
Gain	~~334~~ 234	4	2					240	7	247

Impinger Color: clear — Labeled? ✓

Silica Gel Condition: good — Sealed? ✓

mbw 8/25/09

Check COC for Sample IDs of Media Blanks

WESTON MANAGERS DESIGNERS/CONSULTANTS

mbw

Sample and Velocity Traverse Point Data Sheet - Method 1

Client: Bowater
Location/Plant: Catawba, SC
Source: #3 Rec. Outlet

Operator: MS
Date: 2-15-05
W.O. Number: 03913.008.003

Duct Type	☒ Circular	☐ Rectangular Duct	Indicate appropriate type
Traverse Type	☒ Particulate Traverse	☐ Velocity Traverse	

Distance from far wall to outside of port (in.) = C	139
Port Depth (in.) = D	12
Depth of Duct, diameter (in.) = C-D	127
Area of Duct (ft²)	87.97
Total Traverse Points	24
Total Traverse Points per Port	12

Rectangular Ducts Only	
Width of Duct; rectangular duct only (in.)	
Total Points (rectangular duct only)	

Flow Disturbances	
Upstream - A (ft)	100'
Downstream - B (ft)	40'
Upstream - A (duct diameters)	9.45
Downstream - B (duct diameters)	3.78

Diagram of Stack

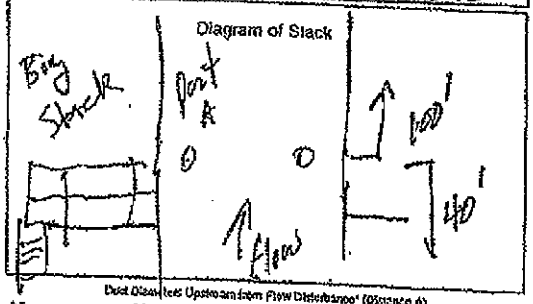

Traverse Point Locations

Traverse Point	% of Duct	Distance from Inside Duct Wall (in)	Distance from Outside of Port (in)
1	2.1	2.5	14.5
2	6.7	8.5	20.5
3	11.8	15	27
4	17.7	22.5	34.5
5	25.0	32	44
6	35.6	45	57
7	64.4	82	94
8	75.0	95.5	107.5
9	82.3	104.5	116.5
10	88.2	112	124
11	93.3	118.5	130.5
12	97.9	124.5	136.5

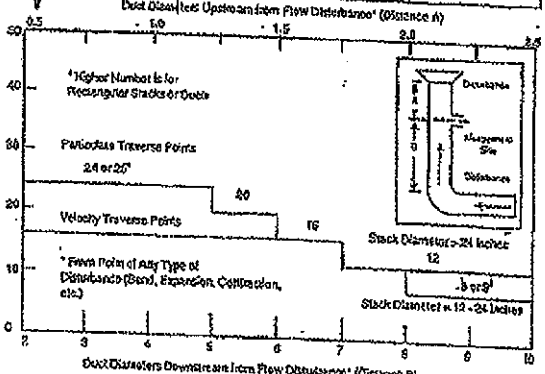

Equivalent Diameter = (2*L*W)/(L+W)

Traverse Point Location Percent of Stack - Circular

Number of Traverse Points	1	2	3	4	5	6	7	8	9	10	11	12
1		14.6		6.7		4.4		3.2		2.6		2.1
2		85.4		25.0		14.6		10.5		8.2		6.7
3				75		29.6		19.4		14.6		11.8
4						70.4		35.6		25.0		19.4
5						85.4		64.4		35.6		25.0
6								80.6		64.4		35.6
7								89.5		75.0		64.4
8										77.4		64.4
9										85.4		75.0
10												82.3
11												88.2
12												93.3
13												97.9

Traverse Point Location Percent of Stack - Rectangular

Number of Traverse Points	1	2	3	4	5	6	7	8	9	10	11	12
1		25.0	16.7	12.5	10.0	8.3	7.1	6.3	5.6	5.0	4.5	4.2
2		75.0	50.0	37.5	30.0	25.0	21.4	18.8	16.7	15.0	13.6	12.5
3			83.3	62.5	50.0	41.7	35.7	31.3	27.8	25.0	22.7	20.8
4				87.5	70.0	58.3	50.0	43.8	38.9	35.0	31.8	29.2
5					90.0	75.0	64.3	56.3	50.0	45.0	40.9	37.5
6							92.9	81.3	72.2	65.0	59.1	54.2
7									94.4	85.0	77.3	70.8
8										95.0	86.4	79.2
9											95.5	87.5
10												95.8
11												
12												

Rectangular Stack Points & Matrix
9 - 3 x 3
12 - 4 x 3
16 - 4 x 4
20 - 5 x 4
25 - 5 x 5
30 - 6 x 5
36 - 6 x 6
42 - 7 x 6
49 - 7 x 7

WESTON

Method1.xls

Copyright Roy F Weston Inc Oct 1998PV

NITROGEN OXIDES AND CARBON MONOXIDE

Bowater
Catawba, SC

03917.008.014
No. 3 Recovery Furnace

EMISSION CALCULATIONS

	Run 1	Run 2	Run 3	Mean
Date	7/29/2009	7/29/2009	7/29/2009	---
Time Began	1255	1434	1623	---
Time Ended	1357	1539	1728	---
Volumetric Flow Rate, (Qs), DSCFM	2.07E+05	2.11E+05	2.13E+05	2.10E+05
BWS	0.235	0.247	0.247	0.243
% Oxygen	5.9	6.3	6.2	6.1
Oxygen Reference Concentration, %	8.0	8.0	8.0	8.0
Nitrogen Oxides MW= 46.01				
Concentration, ppm	54.0	56.0	59.0	56.3
Concentration, ppm @8%O2	46.4	49.5	51.8	49.2
Emission Rate, lb/hr	80.0	84.5	89.9	84.8
Carbon Monoxide MW= 28.00				
Concentration, ppm	282.0	97.0	52.0	143.7
Concentration, ppm @8%O2	242.5	85.7	45.6	124.6
Emission Rate, lb/hr	254.3	89.0	48.2	130.5

RUN SUMMARY

Number 1

Client:	**Bowater**	Project Number:	**03917.008.014**
Location:	**Catawba, SC**	Operator:	**T. Simpkins**
Source:	**No. 3 Recovery**	Date:	**29 Jul 2009**
Calibration:	**1**		

Analyzer	O2	CO2	CO	NOx
Method	EPA 3A	EPA 3A	EPA 10	EPA 7E
Conc. Units	%	%	ppm	ppm

Time: 12:55 to 13:57

Run Averages

6.1	13.3	278	52

Pre-run Bias at 10:25

Zero Bias	0.3	0.0	4	0
Span Bias	10.1	9.6	438	121
Span Gas	10.0	10.1	449	125

Post-run Bias at 14:02

Zero Bias	0.3	0.0	3	-1
Span Bias	10.1	9.7	442	121
Span Gas	10.0	10.1	449	125

Run averages corrected for the average of the pre-run and post-run bias

5.9	13.9	282	54

RUN SUMMARY

Number 2

Client:	**Bowater**	Project Number:	**03917.008.014**
Location:	**Catawba, SC**	Operator:	**T. Simpkins**
Source:	**No. 3 Recovery**	Date:	**29 Jul 2009**
Calibration:	**1**		

Analyzer	O2	CO2	CO	NOx
Method	EPA 3A	EPA 3A	EPA 10	EPA 7E
Conc. Units	%	%	ppm	ppm

Time: 14:34 to 15:39

Run Averages

6.5	12.9	98	54

Pre-run Bias at 14:02

Zero Bias	0.3	0.0	3	-1
Span Bias	10.1	9.7	442	121
Span Gas	10.0	10.1	449	125

Post-run Bias at 15:43

Zero Bias	0.3	0.2	3	-1
Span Bias	10.1	9.8	441	121
Span Gas	10.0	10.1	449	125

Run averages corrected for the average of the pre-run and post-run bias

6.3	13.4	97	56

138

WESTON SOLUTIONS

RUN SUMMARY

Number 3

Client:	**Bowater**	Project Number:	**03917.008.014**
Location:	**Catawba, SC**	Operator:	**T. Simpkins**
Source:	**No. 3 Recovery**	Date:	**29 Jul 2009**
Calibration:	**1**		

Analyzer	O2	CO2	CO	NOx
Method	EPA 3A	EPA 3A	EPA 10	EPA 7E
Conc. Units	%	%	ppm	ppm

Time: 16:23 to 17:28

Run Averages

6.4	13.1	54	56

Pre-run Bias at 15:43

Zero Bias	0.3	0.2	3	-1
Span Bias	10.1	9.8	441	121
Span Gas	10.0	10.1	449	125

Post-run Bias at 17:31

Zero Bias	0.3	0.2	3	-1
Span Bias	10.1	9.8	440	120
Span Gas	10.0	10.1	449	125

Run averages corrected for the average of the pre-run and post-run bias

6.2 ✓	13.5 ✓	52 ✓	59 ✓

JSB

RUN DATA

Number 1

Client: **Bowater**
Location: **Catawba, SC**
Source: **No. 3 Recovery**
Calibration: **1**

Project Number: **03917.008.014**
Operator: **T. Simpkins**
Date: **29 Jul 2009**

Time	O2 %	CO2 %	CO ppm	NOx ppm
		Starting time 12:55		
		Port A		
		Point 1		
12:56	6.1	13.4	147	53
12:57	6.2	13.3	112	52
12:58	6.1	13.4	58	53
12:59	6.1	13.4	78	52
13:00	6.1	13.3	64	53
		Point 2		
13:01	6.1	13.2	181	53
13:02	6.1	13.1	287	53
13:03	6.1	13.1	373	52
13:04	6.0	13.3	348	52
13:05	6.0	13.3	355	51
		Point 3		
13:06	6.0	13.3	371	52
13:07	6.1	13.2	368	51
13:08	6.0	13.2	263	51
13:09	6.0	13.2	540	51
13:10	6.0	13.2	507	51
		Point 4		
13:11	6.0	13.2	723	51
13:12	5.9	13.3	731	50
13:13	5.9	13.4	604	51
13:14	5.9	13.4	468	50
13:15	5.9	13.5	466	51
		Point 5		
13:16	5.9	13.4	391	51
13:17	5.9	13.4	383	52
13:18	6.0	13.4	330	52
13:19	5.8	13.5	385	52
13:20	5.9	13.4	326	52
		Point 6		
13:21	5.9	13.5	381	53

RUN DATA

Number 1

Client: **Bowater**
Location: **Catawba, SC**
Source: **No. 3 Recovery**
Calibration: **1**

Project Number: **03917.008.014**
Operator: **T. Simpkins**
Date: **29 Jul 2009**

Time	O2 %	CO2 %	CO ppm	NOx ppm
13:22	5.8	13.5	421	52
13:23	5.7	13.6	294	53
13:24	5.9	13.4	503	53
13:25	5.8	13.5	361	53
13:26	5.8	13.4	415	53
		Port B		
		Point 1		
13:29	6.1	13.2	118	56
13:30	6.1	13.2	47	57
13:31	6.1	13.2	89	57
13:32	6.1	13.2	99	58
13:33	6.2	13.1	69	58
		Point 2		
13:34	6.1	13.1	213	55
13:35	6.2	13.0	185	55
13:36	6.2	13.0	83	57
13:37	6.1	13.2	62	55
13:38	6.0	13.2	125	54
		Point 3		
13:39	6.2	13.3	245	53
13:40	6.2	13.3	114	53
13:41	6.1	13.4	363	52
13:42	6.2	13.3	214	53
13:43	6.1	13.4	126	52
		Point 4		
13:44	6.3	13.2	189	52
13:45	6.3	13.2	176	51
13:46	6.2	13.2	303	51
13:47	6.3	13.2	243	51
13:48	6.1	13.4	272	51
		Point 5		
13:49	6.3	13.1	210	52
13:50	6.4	13.1	186	52

153

WESTON SOLUTIONS

RUN DATA

Number 1

Client:	**Bowater**	Project Number:	**03917.008.014**
Location:	**Catawba, SC**	Operator:	**T. Simpkins**
Source:	**No. 3 Recovery**	Date:	**29 Jul 2009**
Calibration:	**1**		

Time	O2 %	CO2 %	CO ppm	NOx ppm
13:51	6.4	13.1	195	50
13:52	6.2	13.0	110	52
13:53	6.2	13.1	224	50
		Point 6		
13:54	6.2	13.1	287	50
13:55	6.1	13.1	383	49
13:56	6.2	13.1	342	51
13:57	6.3	13.0	195	52
Run Avg	**6.1**	**13.3**	**278**	**52**

53

RUN DATA

Number 2

Client:	**Bowater**	Project Number:	**03917.008.014**
Location:	**Catawba, SC**	Operator:	**T. Simpkins**
Source:	**No. 3 Recovery**	Date:	**29 Jul 2009**
Calibration:	**1**		

Time	O2 %	CO2 %	CO ppm	NOx ppm
		Starting time 14:34		
		Port B		
		Point 1		
14:35	6.5	12.7	94	54
14:36	6.4	12.7	141	55
14:37	6.3	12.8	117	55
14:38	6.4	13.0	117	55
14:39	6.5	12.9	79	57
		Point 2		
14:40	6.5	12.9	63	55
14:41	6.4	13.0	101	54
14:42	6.4	13.0	112	54
14:43	6.4	13.0	100	54
14:44	6.4	13.1	60	56
		Point 3		
14:45	6.4	13.0	70	54
14:46	6.5	12.9	103	53
14:47	6.4	13.0	80	53
14:48	6.5	12.9	55	54
14:49	6.3	13.1	90	55
		Point 4		
14:50	6.4	13.0	77	56
14:51	6.4	12.7	109	54
14:52	6.2	13.0	51	57
14:53	6.3	12.9	78	54
14:54	6.4	12.8	66	55
		Point 5		
14:55	6.4	12.8	62	54
14:56	6.4	12.8	146	53
14:57	6.5	12.7	159	53
14:58	6.4	12.8	130	54
14:59	6.4	12.8	125	54
		Point 6		
15:00	6.3	12.9	138	55

RUN DATA

Number 2

Client:	**Bowater**	Project Number:	**03917.008.014**
Location:	**Catawba, SC**	Operator:	**T. Simpkins**
Source:	**No. 3 Recovery**	Date:	**29 Jul 2009**
Calibration:	**1**		

Time	O2 %	CO2 %	CO ppm	NOx ppm
15:01	6.4	12.8	129	55
15:02	6.4	12.8	130	55
15:03	6.4	12.9	95	57
15:04	6.3	13.1	104	55
		Port A		
		Point 1		
15:08	6.2	13.2	118	55
15:09	6.3	13.1	76	57
15:10	6.2	13.2	81	56
15:11	6.2	13.3	57	57
15:12	6.3	13.1	61	56
		Point 2		
15:13	6.3	13.2	87	55
15:14	6.4	13.1	59	55
15:15	6.3	13.1	72	55
15:16	6.3	13.1	118	55
15:17	6.4	12.8	114	54
		Point 3		
15:18	6.5	12.8	77	54
15:19	6.4	12.9	43	54
15:20	6.4	12.8	72	54
15:21	6.5	12.8	66	54
15:22	6.3	12.9	156	53
		Point 4		
15:23	6.4	12.8	211	51
15:24	6.4	12.8	162	52
15:25	6.5	12.7	182	51
15:26	6.4	12.8	74	53
15:27	6.4	12.8	67	54
		Point 5		
15:28	6.6	12.6	61	53
15:29	6.5	12.8	45	53
15:30	6.5	12.9	24	55

WESTON SOLUTIONS

RUN DATA

Number 2

Client:	**Bowater**	Project Number:	**03917.008.014**
Location:	**Catawba, SC**	Operator:	**T. Simpkins**
Source:	**No. 3 Recovery**	Date:	**29 Jul 2009**
Calibration:	**1**		

Time	O2 %	CO2 %	CO ppm	NOx ppm
15:31	6.4	13.0	57	54
15:32	6.7	12.7	141	53
		Point 6		
15:33	6.7	12.7	350	50
15:34	6.6	12.7	156	50
15:35	6.9	12.6	81	51
15:36	7.1	12.4	71	51
15:37	7.0	12.4	47	52
15:38	7.1	12.4	26	51
15:39	7.1	12.4	60	50
Run Avg	**6.5**	**12.9**	**98**	**54**

RUN DATA

Number 3

Client:	**Bowater**	Project Number:	**03917.008.014**
Location:	**Catawba, SC**	Operator:	**T. Simpkins**
Source:	**No. 3 Recovery**	Date:	**29 Jul 2009**
Calibration:	**1**		

Time	O2 %	CO2 %	CO ppm	NOx ppm
		Starting time 16:23		
		Port A		
		Point1		
16:24	5.8	13.6	58	57
16:25	5.9	13.6	17	62
16:26	6.3	13.3	12	60
16:27	6.2	13.1	23	62
16:28	6.1	13.3	20	63
		Point 2		
16:29	6.2	13.2	11	63
16:30	6.3	13.1	11	62
16:31	6.2	13.2	11	62
16:32	6.3	13.0	21	61
16:33	6.2	13.1	20	62
		Point 3		
16:34	6.2	13.2	34	62
16:35	6.1	13.3	30	63
16:36	6.2	13.1	19	61
16:37	6.3	13.0	16	60
16:38	6.3	13.1	27	60
		Point 4		
16:39	6.2	13.2	71	60
16:40	6.2	13.3	42	60
16:41	6.3	13.3	11	60
16:42	6.4	13.2	7	60
16:43	6.4	13.1	8	59
		Point 5		
16:44	6.5	13.1	6	60
16:45	6.5	13.0	15	57
16:46	6.4	13.2	39	57
16:47	6.4	13.1	26	57
16:48	6.5	13.0	27	55
		Point 6		
16:49	6.5	13.1	36	55

RUN DATA

Number 3

Client:	**Bowater**	Project Number:	**03917.008.014**
Location:	**Catawba, SC**	Operator:	**T. Simpkins**
Source:	**No. 3 Recovery**	Date:	**29 Jul 2009**
Calibration:	**1**		

Time	O2 %	CO2 %	CO ppm	NOx ppm
16:50	6.5	13.1	62	54
16:51	6.4	13.2	66	54
16:52	6.5	12.9	43	56
16:53	6.3	13.1	66	56
16:54	6.4	13.0	88	55
16:55	6.4	13.0	88	53
16:56	6.4	12.9	170	53
		Port B		
		Point 1		
17:00	6.5	12.9	58	56
17:01	6.3	13.0	101	55
17:02	6.2	13.2	117	54
17:03	6.3	13.1	82	53
17:04	6.3	13.1	98	53
		Point 2		
17:05	6.3	13.2	110	53
17:06	6.6	13.1	70	52
17:07	7.1	12.5	25	51
17:08	7.0	12.6	21	53
17:09	6.6	12.9	22	55
		Point 3		
17:10	6.6	13.0	22	55
17:11	6.5	13.0	26	55
17:12	6.4	13.2	45	55
17:13	6.6	13.0	47	54
17:14	6.6	12.9	40	53
		Point 4		
17:15	6.5	13.2	47	54
17:16	6.5	13.1	49	54
17:17	6.6	13.0	40	54
17:18	6.4	13.1	58	54
17:19	6.3	13.0	84	54
		Point 5		
17:20	6.2	13.1	135	51

RUN DATA

Number 3

Client:	**Bowater**	Project Number:	**03917.008.014**
Location:	**Catawba, SC**	Operator:	**T. Simpkins**
Source:	**No. 3 Recovery**	Date:	**29 Jul 2009**
Calibration:	**1**		

Time	O2 %	CO2 %	CO ppm	NOx ppm
17:21	6.4	13.0	54	52
17:22	6.3	13.1	60	53
17:23	6.2	13.2	62	54
17:24	6.2	13.2	59	56
		Point 6		
17:25	6.1	13.3	69	56
17:26	6.3	13.1	142	53
17:27	6.7	12.7	212	50
17:28	6.3	13.1	167	51
Run Avg	**6.4**	**13.1**	**54**	**56**

BIAS

Number 1

Client:	**Bowater**	Project Number:	**03917.008.014**
Location:	**Catawba, SC**	Operator:	**T. Simpkins**
Source:	**No. 3 Recovery**	Date:	**29 Jul 2009**

Starting Time: 10:25

O2
Method: EPA 3A
Span Conc. 19.9 %

Bias Results

Gas	Cal %	Bias %	Bias Error
Zero	0.0	0.3	1.5%
Span	10.0	10.1	0.5%

CO2
Method: EPA 3A
Span Conc. 19.8 %

Bias Results

Gas	Cal %	Bias %	Bias Error
Zero	0.0	0.0	0.0%
Span	10.0	9.6	-2.0%

CO
Method: EPA 10
Span Conc. 913 ppm

Bias Results

Gas	Cal ppm	Bias ppm	Bias Error
Zero	2	4	0.2%
Span	446	438	-0.9%

156

WESTON SOLUTIONS

BIAS

Number 1

Client:	**Bowater**	Project Number:	**03917.008.014**
Location:	**Catawba, SC**	Operator:	**T. Simpkins**
Source:	**No. 3 Recovery**	Date:	**29 Jul 2009**

Starting Time: 10:25

NOx
Method: EPA 7E
Span Conc. 252 ppm

Bias Results

Gas	Cal ppm	Bias ppm	Bias Error
Zero	-1	0	0.4%
Span	127	121	-2.4%

BIAS AND CALIBRATION DRIFT

Number 2

Client:	**Bowater**	Project Number:	**03917.008.014**
Location:	**Catawba, SC**	Operator:	**T. Simpkins**
Source:	**No. 3 Recovery**	Date:	**29 Jul 2009**

Starting Time: 14:02

O2
Method: EPA 3A
Span Conc. 19.9 %

Bias Results

Gas	Cal %	Bias %	Bias Error
Zero	0.0	0.3	1.5%
Span	10.0	10.1	0.5%

Calibration Drift

Gas	Initial* %	Final %	Drift
Zero	0.3	0.3	0.0%
Span	10.1	10.1	0.0%

*Bias No. 1

CO2
Method: EPA 3A
Span Conc. 19.8 %

Bias Results

Gas	Cal %	Bias %	Bias Error
Zero	0.0	0.0	0.0%
Span	10.0	9.7	-1.5%

Calibration Drift

Gas	Initial* %	Final %	Drift
Zero	0.0	0.0	0.0%
Span	9.6	9.7	0.5%

*Bias No. 1

153

WESTON SOLUTIONS

BIAS AND CALIBRATION DRIFT

Number 2

Client:	**Bowater**	Project Number:	**03917.008.014**
Location:	**Catawba, SC**	Operator:	**T. Simpkins**
Source:	**No. 3 Recovery**	Date:	**29 Jul 2009**

Starting Time: 14:02

CO
Method: EPA 10
Span Conc. 913 ppm

Bias Results

Gas	Cal ppm	Bias ppm	Bias Error
Zero	2	3	0.1% ✓
Span	446	442	-0.4% ✓

Calibration Drift

Gas	Initial* ppm	Final ppm	Drift
Zero	4	3	-0.1% ✓
Span	438	442	0.4% ✓

*Bias No. 1

NOx
Method: EPA 7E
Span Conc. 252 ppm

Bias Results

Gas	Cal ppm	Bias ppm	Bias Error
Zero	-1	-1	0.0% ✓
Span	127	121	-2.4% ✓

Calibration Drift

Gas	Initial* ppm	Final ppm	Drift
Zero	0	-1	-0.4% ✓
Span	121	121	0.0% ✓

*Bias No. 1

BIAS AND CALIBRATION DRIFT

Number 3

Client:	**Bowater**	Project Number:	**03917.008.014**
Location:	**Catawba, SC**	Operator:	**T. Simpkins**
Source:	**No. 3 Recovery**	Date:	**29 Jul 2009**

Starting Time: 15:43

O2
Method: EPA 3A
Span Conc. 19.9 %

Bias Results

Gas	Cal %	Bias %	Bias Error
Zero	0.0	0.3	1.5%
Span	10.0	10.1	0.5%

Calibration Drift

Gas	Initial* %	Final %	Drift
Zero	0.3	0.3	0.0%
Span	10.1	10.1	0.0%

*Bias No. 2

CO2
Method: EPA 3A
Span Conc. 19.8 %

Bias Results

Gas	Cal %	Bias %	Bias Error
Zero	0.0	0.2	1.0%
Span	10.0	9.8	-1.0%

Calibration Drift

Gas	Initial* %	Final %	Drift
Zero	0.0	0.2	1.0%
Span	9.7	9.8	0.5%

*Bias No. 2

BIAS AND CALIBRATION DRIFT

Number 3

Client:	**Bowater**	Project Number:	**03917.008.014**
Location:	**Catawba, SC**	Operator:	**T. Simpkins**
Source:	**No. 3 Recovery**	Date:	**29 Jul 2009**

Starting Time: 15:43

CO
Method: EPA 10
Span Conc. 913 ppm

Bias Results

Gas	Cal ppm	Bias ppm	Bias Error
Zero	2	3	0.1%
Span	446	441	-0.5%

Calibration Drift

Gas	Initial* ppm	Final ppm	Drift
Zero	3	3	0.0%
Span	442	441	-0.1%

*Bias No. 2

NOx
Method: EPA 7E
Span Conc. 252 ppm

Bias Results

Gas	Cal ppm	Bias ppm	Bias Error
Zero	-1	-1	0.0%
Span	127	121	-2.4%

Calibration Drift

Gas	Initial* ppm	Final ppm	Drift
Zero	-1	-1	0.0%
Span	121	121	0.0%

*Bias No. 2

BIAS AND CALIBRATION DRIFT

Number 4

Client:	**Bowater**	Project Number:	**03917.008.014**
Location:	**Catawba, SC**	Operator:	**T. Simpkins**
Source:	**No. 3 Recovery**	Date:	**29 Jul 2009**

Starting Time: 17:31

O2
Method: EPA 3A
Span Conc. 19.9 %

Bias Results

Gas	Cal %	Bias %	Bias Error
Zero	0.0	0.3	1.5%
Span	10.0	10.1	0.5%

Calibration Drift

Gas	Initial* %	Final %	Drift
Zero	0.3	0.3	0.0%
Span	10.1	10.1	0.0%

*Bias No. 3

CO2
Method: EPA 3A
Span Conc. 19.8 %

Bias Results

Gas	Cal %	Bias %	Bias Error
Zero	0.0	0.2	1.0%
Span	10.0	9.8	-1.0%

Calibration Drift

Gas	Initial* %	Final %	Drift
Zero	0.2	0.2	0.0%
Span	9.8	9.8	0.0%

*Bias No. 3

BIAS AND CALIBRATION DRIFT

Number 4

Client:	**Bowater**	Project Number:	**03917.008.014**
Location:	**Catawba, SC**	Operator:	**T. Simpkins**
Source:	**No. 3 Recovery**	Date:	**29 Jul 2009**

Starting Time: 17:31

CO
Method: EPA 10
Span Conc. 913 ppm

Bias Results

Gas	Cal ppm	Bias ppm	Bias Error
Zero	2	3	0.1% ✓
Span	446	440	-0.7% ✓

Calibration Drift

Gas	Initial* ppm	Final ppm	Drift
Zero	3	3	0.0% ✓
Span	441	440	-0.1% ✓

*Bias No. 3

NOx
Method: EPA 7E
Span Conc. 252 ppm

Bias Results

Gas	Cal ppm	Bias ppm	Bias Error
Zero	-1	-1	0.0% ✓
Span	127	120	-2.8% ✓

Calibration Drift

Gas	Initial* ppm	Final ppm	Drift
Zero	-1	-1	0.0% ✓
Span	121	120	-0.4% ✓

*Bias No. 3

153

CALIBRATION

Number 1

Client:	**Bowater**	Project Number:	**03917.008.014**
Location:	**Catawba, SC**	Operator:	**T. Simpkins**
Source:	**No. 3 Recovery**	Date:	**29 Jul 2009**

Starting Time: 09:58

O2

Method: EPA 3A

Calibration Type: Linear Regression

Calibration Results

%	Cylinder ID	Result, mv
Zero	-	22
10.0	CC 195528	423
19.9	SG 9151644	815

Curve Coefficients

Slope	Intercept	Corr. Coeff.
39.85	22.9	>0.9999

CO2

Method: EPA 3A

Calibration Type: Linear Regression

Calibration Results

%	Cylinder ID	Result, mv
Zero	-	19
10.1	CC 195528	129
19.8	SG 9151644	237

Curve Coefficients

Slope	Intercept	Corr. Coeff.
11.026	18.8	>0.9999

CALIBRATION

Number 1

Client:	**Bowater**	Project Number:	**03917.008.014**
Location:	**Catawba, SC**	Operator:	**T. Simpkins**
Source:	**No. 3 Recovery**	Date:	**29 Jul 2009**

Starting Time: 09:58

CO

Method: EPA 10

Calibration Type: Linear Regression

Calibration Results

ppm	Cylinder ID	Result, mv
Zero	-	-36
449	CC 184641	2243
913	SG 9165990	4652

Curve Coefficients

Slope	Intercept	Corr. Coeff.
5.135	-45.1	>0.9999

NOx

Method: EPA 7E

Calibration Type: Linear Regression

Calibration Results

ppm	Cylinder ID	Result, mv
Zero	-	0
125	CC 208946	4312
252	CC 221419	8442

Curve Coefficients

Slope	Intercept	Corr. Coeff.
33.50	41.9	0.9999

CALIBRATION ERROR

Number 1

Client:	**Bowater**	Project Number:	**03917.008.014**
Location:	**Catawba, SC**	Operator:	**T. Simpkins**
Source:	**No. 3 Recovery**	Date:	**29 Jul 2009**

Starting Time: 09:58

O2

Method: EPA 3A

Slope 39.85 **Intercept** 22.9

Standard, %	Response, mV	%	Error, %
Zero	22	0.0	0.0 ✓
10.00	423	10.0	0.0 ✓
19.9	815	19.9	0.0 ✓

CO2

Method: EPA 3A

Slope 11.026 **Intercept** 18.8

Standard, %	Response, mV	%	Error, %
Zero	19	0.0	0.0 ✓
10.07	129	10.0	-0.4 ✓
19.8	237	19.8	0.2 ✓

CO

Method: EPA 10

Slope 5.135 **Intercept** -45.1

Standard, ppm	Response, mV	ppm	Error, %
Zero	-36	2	0.2 ✓
449	2243	446	-0.3 ✓
913	4652	915	0.2 ✓

NOx

Method: EPA 7E

Slope 33.50 **Intercept** 41.9

Standard, ppm	Response, mV	ppm	Error, %
Zero	0	-1	-0.4 ✓
125	4312	127	0.8 ✓
252	8442	251	-0.4 ✓

WESTON SOLUTIONS

ANALYZER INFORMATION

Number 1

Client:	**Bowater**	Project Number:	**03917.008.014**
Location:	**Catawba, SC**	Operator:	**T. Simpkins**
Source:	**No. 3 Recovery**	Date:	**29 Jul 2009**

File Name: C:\Data\Bowater- Catawba, SC\July 2009 CEM\3RB 072909.cem
Computer: WSAUB60 **Trailer:** 261

Analog Input Device: **Keithley KPCMCIA 16AI Card**

Channel 1

Analyte	**O2**
Method	**EPA 3A**, Using Bias
Analyzer Make, Model & Serial No.	**Servomex; 0144001/4302**
Full-Scale Output, mv	**1000**
Span Concentration, %	**19.9**

Channel 2

Analyte	**CO2**
Method	**EPA 3A**, Using Bias
Analyzer Make, Model & Serial No.	**Servomex; 0144001/4302**
Full-Scale Output, mv	**350**
Span Concentration, %	**19.8**

Channel 3

Analyte	**CO**
Method	**EPA 10**, Using Bias
Analyzer Make, Model & Serial No.	**Teledyne 300EM; 322**
Full-Scale Output, mv	**10000**
Span Concentration, ppm	**913**

Channel 4

Analyte	**NOx**
Method	**EPA 7E**, Using Bias
Analyzer Make, Model & Serial No.	**CAI 400-CLD; 6N06002**
Full-Scale Output, mv	**10000**
Span Concentration, ppm	**252**

APPENDIX G
LABORATORY DATA

Inter-Office Memorandum

WESTON SOLUTIONS
Restoring Resource Efficiency
Auburn Operations
1625 Pumphrey Avenue, Auburn, AL 36832
334.466.5600

TO:	Temp Simpkins	cc:	File
FROM:	Tracy Landers, Laboratory Manager	Date:	4 August 2009
PROJECT:	Bowater – Catawba, SC		
W.O. NO:	03917.008.014	JOB NO.:	2009-137
SUBJECT:	Method 5 Analysis Results.		
ACTION:	Analysis of samples received on 31 July 2009.		

NARATIVE:

This letter along with the one page analytical report constitutes our report of gravimetric determination of the glass fiber filters and acetone rinse fractions submitted to the laboratory for particulate analysis. The samples arrived in good condition and in accordance with the chain-of-custody. The samples were prepared on 31 July 2009 and analyzed on 3 August 2009 through 4 August 2009. The analysis followed procedures in USEPA Reference Method 5 for particulate emissions from stationary sources.

These results meet all requirements of NELAC, unless otherwise specified.

These results of this report relate only to the samples listed in the body of this report.

This report shall not be reproduced by any organization outside of Weston Solutions, Inc. in part or in full, without the written approval from Weston Solutions, Inc.

QUALITY ASSURANCE AND QUALITY CONTROL:

Quality control procedures conformed to the requirements of the reference method and our laboratory quality assurance program. Duplicate weights differed less than 0.5 mg. The acetone fraction blank residue correction was greater than 0.001% of the total mass of the wash solvents used; therefore the acetone rinse fractions were corrected using 0.001% of the total mass of the acetone solvent used, the maximum correction allowed by USEPA Method 5. Filter residue weights were not blank corrected.

Substantiating data is on file and available upon request.

Attachments

WESTON SOLUTIONS
Air Quality Laboratory
1625 Pumphrey Ave. Auburn, AL 36832
334.466.5600

Analysis Report

EPA Method 5

Client ID : Bowater - Catawba, SC
WESTON W.O. No. : 03917.008.014
Lab Job No. : 2009-137
Date Received : 7/31/2009
Analyst : MDD
Date(s) Analyzed : 8/3/2009 - 8/4/2009

Balance ID: Mettler AG204
Density of Acetone (g/mL): 0.791
Lab Ambient Temp (F): 70.1
Lab Rel Humidity (%): 39
Barometric Pressure (Hg): 29.29

Swing Boiler NV 8/26

Source	No. 1 ~~Power Boiler~~			
Date Collected	**7/30/2009**			
Field Run No.	**ONE**	**TWO**	**THREE**	**FIELD BLANK**
LIQUID FRACTION				
Filter ID	DA 0850	DA 0851	DA 0852	DA 0875
Beaker ID	124-07	125-07	126-07	127-07
Liquid Volume (mL)	72	53	62	164
Constant Initial Weight (g)	**110.0933**	**122.2462**	**105.9377**	**105.9977**
Constant Final Weight (g)	**110.1076**	**122.2543**	**105.9489**	**105.9996**
Final-Initial Beaker Wts. (g)	0.0143	0.0081	0.0111	0.0020
Liquid Blank Correction, > 0.001% (g)*	0.0006	0.0004	0.0005	
Liquid Particulate Weight (g)	**0.0137**	**0.0076**	**0.0107**	**0.0020**
FILTER FRACTION				
Filter ID	DA 0850	DA 0851	DA 0852	DA 0875
Constant Initial Weight (g)	**0.3949**	**0.3941**	**0.3943**	**0.3963**
Constant Final Weight (g)	**0.4836**	**0.4814**	**0.4687**	**0.3960**
Final-Initial Filter Wts. (g)	0.0888	0.0873	0.0744	-0.0003
Filter Blank (g)	-0.0003	-0.0003	-0.0003	
Filter Particulate Weight (g)	**0.0888**	**0.0873**	**0.0744**	
SUMMARY				
Filter Particulate Weight (g)	**0.0888**	**0.0873**	**0.0744**	
Liquid Particulate Weight (g)	**0.0137**	**0.0076**	**0.0107**	
Net Particulate Weight (g)	**0.1025**	**0.0949**	**0.0851**	

Values are rounded for presentation purposes only, thus values shown may differ from actual calculations.

Sample Recovery Solution **Acetone**
Weight Percent of Blank Liquid Fraction **0.0012%**

***Note: If the blank liquid fraction has a residue correction of greater than 0.001 percent, then the samples are blank corrected upto 0.001 % of the mass of the wash solvent.**

Tracy Landers
Tracy Landers, Laboratory Manager

CUSTODY TRANSFER RECORD / LABORATORY SERVICE REQUEST

Client:	Bowater Catawba
W. O. #:	03917.008.014
TAT:	7 days
Project Manager:	Simpkins
Submitted by:	Joshua Ahern
Phone #:	334-750-7699

Analyses Requested

Analytical Method 7/30/9

LAB ID (Lab Use Only)	Sample Description/ID	Matrix	Date Collected	Gravametric Method 5						
DA0850	Run 1 No.1 ~~Power~~ Swing Boiler NY 8/26	Filter	5/21/2009	X						
	Run 1 No.1 ~~Power~~ Swing Boiler probe rinse	Acetone	5/21/2009	X						
DA0851	Run 2 No.1 ~~Power~~ Swing Boiler	Filter	5/21/2009	X						
	Run 2 No.1 ~~Power~~ Swing Boiler probe rinse	Acetone	5/21/2009	X						
DA0852	Run 3 No.1 ~~Power~~ Swing Boiler	Filter	5/21/2009	X						
	Run 3 No.1 ~~Power~~ Swing Boiler probe rinse	Acetone	5/21/2009	X						
DA0875	Filter Blank	Filter	5/21/2009	X						
	Acetone Blank 200 ml	Acetone	5/21/2009	X						

TS 8/4/9

END OF DOCUMENT

Total Listed on this COC

Relinquished By	Received By	Date/Time	#/Condition	Relinquished By	Received By	Date/Time	#/Condition
Joshua Ahern	Briana Smith	7/31/09 8:30	7/Good				

WESTON Analytics Use

SAMPLES WERE: Shipped or Hand Delv'd

Ambient or Chilled

Intact or Damaged

SECURITY SEALS WERE: Present or Absent or N/A

SAMPLE LOSS: Y or N

COC ACCURATE: Y or N

LAB JOB NO: 2009-137

SAMPLE TEMP: Amb

WESTON SOLUTIONS

Weston Solutions, Inc.
1625 Pumphrey Avenue
Auburn, Alabama 36832-4303
334-466-5600 ♦ Fax 334-466-5660
www.westonsolutions.com

APPENDIX H
QUALITY CONTROL DATA

CALIBRATION GAS CERTIFICATES

Airgas

Airgas Specialty Gases
1075 Cinclare Drive
Port Allen, LA 70767
225.388.0900
FAX: 225.388.0959
www.airgas.com

CERTIFICATE OF ANALYSIS
Grade of Product: EPA Protocol

Part Number:	E03NI80E15A0138	Reference Number:	83-124165318-2
Cylinder Number:	CC195528	Cylinder Volume:	151 Cu.Ft.
Laboratory:	ASG - Port Allen - LA	Cylinder Pressure:	2015 PSIG
Analysis Date:	Feb 04, 2009	Valve Outlet:	590

Expiration Date: Feb 04, 2012

Certification performed in accordance with "EPA Traceability Protocol (Sept. 1997)" using the assay procedures listed. Analytical methodology does not require correction for analytical interferences. This cylinder has a total analytical uncertainty as stated below with a confidence level of 95%. There are no significant impurities which affect the use of this calibration mixture. All concentrations are on a volume/volume basis unless otherwise noted.
Do Not Use This Cylinder below 150 psig.i.e. 1 Mega Pascal

ANALYTICAL RESULTS

Component	Requested Concentration	Actual Concentration	Protocol Method	Total Relative Uncertainty
CARBON DIOXIDE	10.00 %	10.07 %	G1	+/- 1% NIST Traceable
OXYGEN	10.00 %	10.14 %	G1	+/- 1% NIST Traceable
NITROGEN	Balance			

CALIBRATION STANDARDS

Type	Lot ID	Cylinder No	Concentration	Expiration Date
NTRM	06060821	CC207958	22.51% OXYGEN/NITROGEN	May 01, 2010
NTRM	97051220	SG9161062BAL	15.862% CARBON DIOXIDE/NITROGEN	May 01, 2010

ANALYTICAL EQUIPMENT

Instrument/Make/Model	Analytical Principle	Last Multipoint Calibration
SCO2GM	NonDispersive Infrared	Feb 02, 2009
SO2GH	Paramagnetic	Jan 29, 2009

Triad Data Available Upon Request

Notes:

QA Approval

Airgas

Airgas Specialty Gases
6421 Monclova Road
Maumee, OH 43537-9760
(419) 893-7226
FAX: (419) 893-2963
www.airgas.com

CERTIFICATE OF ANALYSIS
Grade of Product: EPA Protocol

Part Number:	E03NI60E15A0286	Reference Number:	113-124139028-2
Cylinder Number:	SG9151644BAL	Cylinder Volume:	160 Cu.Ft.
Laboratory:	ASG - Maumee - OH	Cylinder Pressure:	2015 PSIG
Analysis Date:	May 28, 2008	Valve Outlet:	590

Expiration Date: May 28, 2011

Certification performed in accordance with "EPA Traceability Protocol (Sept. 1997)" using the assay procedures listed. Analytical Methodology does not require correction for analytical interferences. This cylinder has a total analytical uncertainty as stated below with a confidence level of 95%. There are no significant impurities which affect the use of this calibration mixture. All concentrations are on a volume/volume basis unless otherwise noted.
Do Not Use This Cylinder below 150 psig,i.e. 1 Mega Pascal

ANALYTICAL RESULTS

Component	Requested Concentration	Actual Concentration	Protocol Method	Total Relative Uncertainty
CARBON DIOXIDE	20.00 %	19.77 %	G1	+/- 1% NIST Traceable
OXYGEN	20.00 %	19.91 %	G1	+/- 1% NIST Traceable
NITROGEN	Balance			

CALIBRATION STANDARDS

Type	Lot ID	Cylinder No	Concentration	Expiration Date
NTRM	061204	CC184889	19.66% CARBON DIOXIDE/NITROGEN	May 01, 2010
NTRM	061202	CC195617	20.90% OXYGEN/NITROGEN	Jan 01, 2010

ANALYTICAL EQUIPMENT

Instrument/Make/Model	Analytical Principle	Last Multipoint Calibration
030-Horiba VIA-510	NDIR	May 12, 2008
050-Rosemount 755R O2 Analyzer	Paramagnetic	May 09, 2008

Triad Data Available Upon Request

Notes:

QA Approval

Airgas

Airgas Specialty Gases
1075 Cinclare Drive
Port Allen, LA 70767
225.388.0900
FAX: 225.388.0959
www.airgas.com

CERTIFICATE OF ANALYSIS
Grade of Product: EPA Protocol

Part Number:	E02NI99E15A0499	Reference Number:	83-124154206-1
Cylinder Number:	CC184641	Cylinder Volume:	144 Cu.Ft.
Laboratory:	ASG - Port Allen - LA	Cylinder Pressure:	2015 PSIG
Analysis Date:	Oct 21, 2008	Valve Outlet:	350

Expiration Date: Oct 21, 2011

Certification performed in accordance with "EPA Traceability Protocol (Sept. 1997)" using the assay procedures listed. Analytical Methodology does not require correction for analytical interferences. This cylinder has a total analytical uncertainty as stated below with a confidence level of 95%. There are no significant impurities which affect the use of this calibration mixture. All concentrations are on a volume/volume basis unless otherwise noted.
Do Not Use This Cylinder below 150 psig.i.e. 1 Mega Pascal

ANALYTICAL RESULTS

Component	Requested Concentration	Actual Concentration	Protocol Method	Total Relative Uncertainty
CARBON MONOXIDE	450.0 PPM	448.9 PPM	G1	+/- 1% NIST Traceable
NITROGEN	Balance			

CALIBRATION STANDARDS

Type	Lot ID	Cylinder No	Concentration	Expiration Date
NTRM	08060423	CC255481	1002.4PPM CARBON MONOXIDE/NITROGEN	Apr 15, 2012

ANALYTICAL EQUIPMENT

Instrument/Make/Model	Analytical Principle	Last Multipoint Calibration
FTIRHCO	FTIR	Oct 08, 2008

Triad Data Available Upon Request

Notes:

QA Approval

Airgas

Airgas Specialty Gases
1075 Cinclare Drive
Port Allen, LA 70767
225.388.0900
FAX: 225.388.0959
www.airgas.com

CERTIFICATE OF ANALYSIS
Grade of Product: EPA Protocol

Part Number:	E02NI99E15A0612	Reference Number:	83-124139267-22
Cylinder Number:	SG9165990BAL	Cylinder Volume:	144 Cu.Ft.
Laboratory:	ASG - Port Allen - LA	Cylinder Pressure:	2015 PSIG
Analysis Date:	Jun 13, 2008	Valve Outlet:	350

Expiration Date: Jun 13, 2011

Certification performed in accordance with "EPA Traceability Protocol (Sept. 1997)" using the assay procedures listed. Analytical Methodology does not require correction for analytical interferences. This cylinder has a total analytical uncertainty as stated below with a confidence level of 95%. There are no significant impurities which affect the use of this calibration mixture. All concentrations are on a volume/volume basis unless otherwise noted.
Do Not Use This Cylinder below 150 psig.i.e. 1 Mega Pascal

ANALYTICAL RESULTS

Component	Requested Concentration	Actual Concentration	Protocol Method	Total Relative Uncertainty
CARBON MONOXIDE	900.0 PPM	913.2 PPM	G1	+/- 1% NIST Traceable
NITROGEN	Balance			

CALIBRATION STANDARDS

Type	Lot ID	Cylinder No	Concentration	Expiration Date
NTRM	08060423	CC255481	1002.4PPM CARBON MONOXIDE/NITROGEN	Apr 15, 2012

ANALYTICAL EQUIPMENT

Instrument/Make/Model	Analytical Principle	Last Multipoint Calibration
FTIRHCO	FTIR	Jun 06, 2008

Triad Data Available Upon Request

Notes:

QA Approval

Airgas

Airgas Specialty Gases
1075 Cinclare Drive
Port Allen, LA 70767
225.388.0900
FAX: 225.388.0959
www.airgas.com

CERTIFICATE OF ANALYSIS
Grade of Product: EPA Protocol

Part Number:	E02NI99E15A3865	Reference Number:	83-124139267-31
Cylinder Number:	CC208946	Cylinder Volume:	144 Cu.Ft.
Laboratory:	ASG - Port Allen - LA	Cylinder Pressure:	2015 PSIG
Analysis Date:	Jun 11, 2008	Valve Outlet:	660

Expiration Date: Jun 11, 2010

Certification performed in accordance with "EPA Traceability Protocol (Sept. 1997)" using the assay procedures listed. Analytical Methodology does not require correction for analytical interferences. This cylinder has a total analytical uncertainty as stated below with a confidence level of 95%. There are no significant impurities which affect the use of this calibration mixture. All concentrations are on a volume/volume basis unless otherwise noted.
Do Not Use This Cylinder below 150 psig.i.e. 1 Mega Pascal

ANALYTICAL RESULTS

Component	Requested Concentration	Actual Concentration	Protocol Method	Total Relative Uncertainty
NITRIC OXIDE	125.0 PPM	125.3 PPM	G1	+/- 1% NIST Traceable
NITROGEN	Balance			
Total oxides of nitrogen		125.4 PPM		For Reference Only

CALIBRATION STANDARDS

Type	Lot ID	Cylinder No	Concentration	Expiration Date
NTRM	06060331	CC207594	490.0PPM NITRIC OXIDE/NITROGEN	Jan 01, 2010
NTRM	06060241	CC207849	257.0PPM NITRIC OXIDE/NITROGEN	Jan 01, 2010

ANALYTICAL EQUIPMENT

Instrument/Make/Model	Analytical Principle	Last Multipoint Calibration
FTIRMNO	FTIR	Jun 02, 2008

Triad Data Available Upon Request

Notes:

QA Approval

Airgas

Airgas Specialty Gases
1075 Cinclare Drive
Port Allen, LA 70767
225.388.0900
FAX: 225.388.0959
www.airgas.com

CERTIFICATE OF ANALYSIS
Grade of Product: EPA Protocol

Part Number:	E02NI99E15A3614	Reference Number:	83-124170019-3
Cylinder Number:	CC221419	Cylinder Volume:	144 Cu.Ft.
Laboratory:	ASG - Port Allen - LA	Cylinder Pressure:	2015 PSIG
Analysis Date:	Mar 24, 2009	Valve Outlet:	660

Expiration Date: Mar 24, 2011

Certification performed in accordance with "EPA Traceability Protocol (Sept. 1997)" using the assay procedures listed. Analytical Methodology does not require correction for analytical interferences. This cylinder has a total analytical uncertainty as stated below with a confidence level of 95%. There are no significant impurities which affect the use of this calibration mixture. All concentrations are on a volume/volume basis unless otherwise noted.
Do Not Use This Cylinder below 150 psig.i.e. 1 Mega Pascal

ANALYTICAL RESULTS

Component	Requested Concentration	Actual Concentration	Protocol Method	Total Relative Uncertainty
NITRIC OXIDE	250.0 PPM	251.2 PPM	G1	+/- 1% NIST Traceable
NITROGEN	Balance			
Total oxides of nitrogen		251.9 PPM		For Reference Only

CALIBRATION STANDARDS

Type	Lot ID	Cylinder No	Concentration	Expiration Date
NTRM	060603	CC206072	490PPM NITRIC OXIDE/NITROGEN	Jan 01, 2010

ANALYTICAL EQUIPMENT

Instrument/Make/Model	Analytical Principle	Last Multipoint Calibration
FTIRMNO	FTIR	Mar 04, 2009

Triad Data Available Upon Request

Notes:

QA Approval

Airgas

Airgas Speciality Gases
12722 S. Wentworth Avenue
Chicago, IL 60628
1-773-785-3000
FAX: 1-773-785-1928
www.airgas.com

CERTIFICATE OF ANALYSIS
Grade of Product: EPA Protocol

Part Number:	E02AI99E15A1704	Reference Number:	54-124172114-2
Cylinder Number:	SG9111909@	Cylinder Volume:	146 Cu.Ft.
Laboratory:	ASG - Chicago - IL	Cylinder Pressure:	2015 PSIG
Analysis Date:	Mar 23, 2009	Valve Outlet:	660

Expiration Date: Mar 23, 2011

Certification performed in accordance with "EPA Traceability Protocol (Sept. 1997)" using the assay procedures listed. Analytical Methodology does not require correction for analytical interferences. This cylinder has a total analytical uncertainty as stated below with a confidence level of 95%. There are no significant impurities which affect the use of this calibration mixture. All concentrations are on a volume/volume basis unless otherwise noted.
Do Not Use This Cylinder below 150 psig.i.e. 1 Mega Pascal

ANALYTICAL RESULTS

Component	Requested Concentration	Actual Concentration	Protocol Method	Total Relative Uncertainty
NITROGEN DIOXIDE	50.00 PPM	45.2 PPM	G1	+/- 1% NIST Traceable
Air	Balance			

CALIBRATION STANDARDS

Type	Lot ID	Cylinder No	Concentration	Expiration Date
GMIS/NO2	112008	CC208124	57.23PPM NITROGEN DIOXIDE/NITROGEN	Nov 16, 2010

ANALYTICAL EQUIPMENT

Instrument/Make/Model	Analytical Principle	Last Multipoint Calibration
Nicolet Magna	FTIR	Mar 06, 2009

Triad Data Available Upon Request

Notes:

QA Approval

NO_x CONVERTER EFFICIENCY

RUN DATA

Number 4

Client:	**Bowater**	Project Number:	**03917.008.014**
Location:	**Catawba, SC**	Operator:	**T. Simpkins**
Source:	**Lime Kiln**	Date:	**28 Jul 2009**
Calibration:	**1**		

Time	O2		NOx	
	mv	%	mv	ppm
	Starting time 18:44			
18:45	859	21.2	1473	44
18:46	861	21.2	1481	45
18:47	861	21.2	1490	45
	NO2 45.2 ppm			
	SG 9111909			
18:48	862	21.2	1504	45
18:49	862	21.2	1516	46
Run Avg	**861**	**21.2**	**1493**	**45**

RUN DATA

Number 4

Client:	**Bowater**	Project Number:	**03917.008.014**
Location:	**Catawba, SC**	Operator:	**T. Simpkins**
Source:	**No. 3 Recovery**	Date:	**29 Jul 2009**
Calibration:	**1**		

Time	O2 %	CO2 %	CO ppm	NOx ppm
	Starting time 18:47			
	NO2- 45 ppm			
18:48	19.5	0.4	3	45
18:49	19.5	0.4	3	45
18:50	19.5	0.4	3	45
18:51	19.5	0.3	3	45
18:52	19.6	0.2	3	44
18:53	19.6	0.2	3	44
Run Avg	**19.5**	**0.3**	**3**	**45**

EQUIPMENT CALIBRATIONS

METHOD 5 DRY GAS METER CALIBRATION USING CRITICAL ORIFICES

1) Select three critical orifices to calibrate the dry gas meter which bracket the expected operating range.
2) Record barometric pressure before and after calibration procedure.
3) Run at tested vacuum (from Orifice Calibration Report), for a period of time necessary to achieve a minimum total volume of 5 cubic feet.
4) Record readings in outlined boxes below, other columns are automatically calculated.

DATE: 12/11/08
METER PART #: AO3

METER SERIAL #: 971130
CRITICAL ORIFICE SET SERIAL #: 1331s

	INITIAL	FINAL	AVG (P_{bar})
BAROMETRIC PRESSURE (in Hg):	29.82	28.90	29.36
Calibrated by:	LoF		

ORIFICE #	RUN #	K' FACTOR (AVG)	TESTED VACUUM (in Hg)	DGM READINGS (FT^3) INITIAL	DGM READINGS (FT^3) FINAL	DGM READINGS (FT^3) NET (V_m)	AMBIENT F°	DGM F° INITIAL	DGM F° FINAL	DGM AVG	ELAPSED TIME (MIN) θ	DGM ΔH (in H_2O)	(1) V_m (STD)	(2) V_{cr} (STD)	(3) Y	(4) $\Delta H_@$
12	1	0.3275	20	286.920	297.342	10.422	49	59	58	59	24	0.58	10.432	10.232	0.981	1.795
16	2	0.4379	20	191.612	207.318	15.706	56	61	62	62	27	1.10	15.650	15.286	0.977	1.930
19	3	0.5175	18	209.618	229.272	19.654	55	62	63	63	29	1.60	19.571	19.422	0.992	2.007
25	4	0.6784	16	230.415	255.380	24.965	55	62	65	64	28	2.70	24.880	24.583	0.988	1.970
31	5	0.8269	16	260.112	284.015	23.903	53	62	62	62	22	4.15	23.976	23.589	0.984	2.031
														AVG =	0.984	1.947

USING THE CRITICAL ORIFICES AS CALIBRATION STANDARDS:

The following equations are used to calculate the standard volumes of air passed through the DGM, V_m (std), and the critical orifice, V_{cr} (std), and the DGM calibration factor, Y. These equations are automatically calculated in the spreadsheet above.

Individual Y's .02 from average? YES

Individual $\Delta H_@$ values 0.2 from average? YES

(1) $V_m \text{ (std)} = K_1 V_m \dfrac{P_{bar} + (\Delta H/13.6)}{T_m}$ = Net volume of gas sample passed through DGM, corrected to standard conditions

K_1 = 17.64 °R/in. Hg (English), 0.3858 °K/mm Hg (Metric)

T_m = Absolute DGM avg. temperature (°R - English, °K - Metric)

(2) $V_{cr} \text{ (std)} = K' \sqrt{\dfrac{P_{bar}\,\theta}{T_{amb}}}$ = Volume of gas sample passed through the critical orifice, corrected to standard conditions

T_{amb} = Absolute ambient temperature (°R - English, °K - Metric)

K' = Average K' factor from Critical Orifice Calibration

(3) $Y = \dfrac{V_{cr} \text{ (std)}}{V_m \text{ (std)}}$ = DGM calibration factor

(4) $\Delta H_@ = \left(\dfrac{0.75\,\theta}{V_{cr}(std)}\right)^2 \Delta H$

Next Calibration Due By:	12/11/2009

METHOD 5 DRY GAS METER CALIBRATION USING CRITICAL ORIFICES

1) Select three critical orifices to calibrate the dry gas meter which bracket the expected operating range.
2) Record barometric pressure before and after calibration procedure.
3) Run at tested vacuum (from Orifice Calibration Report), for a period of time necessary to achieve a minimum total volume of 5 cubic feet.
4) Record readings in outlined boxes below, other columns are automatically calculated.

DATE: 5/8/09
METER PART #: AO24
METER SERIAL #: 28174
CRITICAL ORIFICE SET SERIAL #: 1331s

	INITIAL	FINAL	AVG (P_{bar})
BAROMETRIC PRESSURE (in Hg):	29.22	29.22	29.22
Calibrated by:	LoF		

ORIFICE #	RUN #	K' FACTOR (AVG)	TESTED VACUUM (in Hg)	DGM READINGS (FT^3) INITIAL	DGM READINGS (FT^3) FINAL	DGM READINGS (FT^3) NET (V_m)	AMBIENT F°	DGM F° INITIAL	DGM F° FINAL	DGM AVG	ELAPSED TIME (MIN) θ	DGM ΔH (in H_2O)	(1) V_m (STD)	(2) V_{cr} (STD)	(3) Y	(4) $\Delta H_@$
12	1	0.3275	20	846.344	858.497	12.153	77	74	76	75	28	0.56	11.732	11.566	0.986	1.846
16	2	0.4379	19	858.497	871.172	12.675	79	76	79	78	22	1.05	12.194	12.129	0.995	1.943
19	3	0.5175	18	871.172	889.465	18.293	79	79	83	81	27	1.45	17.502	17.591	1.005	1.922
25	4	0.6784	16	889.465	930.840	41.375	80	83	87	85	46	2.55	39.404	39.251	0.996	1.970
31	5	0.8269	16	931.568	944.718	13.150	81	87	90	89	12	3.80	12.483	12.469	0.999	1.980
														AVG =	0.996	1.932

USING THE CRITICAL ORIFICES AS CALIBRATION STANDARDS:

The following equations are used to calculate the standard volumes of air passed through the DGM, V_m (std), and the critical orifice, V_{cr} (std), and the DGM calibration factor, Y. These equations are automatically calculated in the spreadsheet above.

Individual Y's .02 from average? YES

Individual $\Delta H_@$ values 0.2 from average? YES

(1) $V_m \text{ (std)} = K_1 V_m \dfrac{P_{bar} + (\Delta H/13.6)}{T_m}$ = Net volume of gas sample passed through DGM, corrected to standard conditions

K_1 = 17.64 °R/in. Hg (English), 0.3858 °K/mm Hg (Metric)

T_m = Absolute DGM avg. temperature (°R - English, °K - Metric)

(2) $V_{cr} \text{ (std)} = K' \sqrt{\dfrac{P_{bar}\,\theta}{T_{amb}}}$ = Volume of gas sample passed through the critical orifice, corrected to standard conditions

T_{amb} = Absolute ambient temperature (°R - English, °K - Metric)

K' = Average K' factor from Critical Orifice Calibration

(3) $Y = \dfrac{V_{cr} \text{ (std)}}{V_m \text{ (std)}}$ = DGM calibration factor

Next Calibration Due By: 12/30/2009

(4) $\Delta H_@ = \left(\dfrac{0.75\,\theta}{V_{cr}(std)}\right)^2 \Delta H$

Bowater 03917.008.014
Catawba, SC No. 3 Recovery Furnace

POST-TEST METER CALIBRATION CHECK

Meter ID: AO24

Run Number		1	2	3	Mean
Sampling Time, min	(Theta)	60	60	60	60
Meter Volume, ft^3	(Vm)	38.283	38.754	38.913	38.650
Meter Temperature, R	(tm)	562	568	565	565
Barometric Pressure, in. Hg	(Pb)	29.23	29.23	29.23	29.23
Meter Orifice Pressure, in. H_2O	(dH)	1.295	1.316	1.337	1.316
Meter Pressure, in. Hg	(Pm)	29.33	29.33	29.33	29.33
Ave Sq Rt Meter Orifice Pressure, in. H_2O	((sqrt. dH)ave	1.136	1.145	1.154	1.145
Meter Orifice Calibraion Coefficient, in.	(dH@)	1.932	1.932	1.932	1.932
Dry Mol. Wt. of Stack Gas, lb/lb-mole	(Md)	30.46	30.40	30.41	30.42
Dry Gas Meter Cal. Check Value	(Yqa)	0.9772	0.9792	0.9800	0.9788
Meter Correction Factor	(Y)	0.9960	0.9960	0.9960	0.9960
Mean Percent Difference, %	< +/- 5%				**-1.73**

Bowater
Catawba, South Carolina

03917.008.014
No. 1 Swing Boiler

POST-TEST METER Y CALIBRATION CHECK

Meter ID: AO24

Run Number		1	2	3	Mean
Sampling Time, min	(Theta)	60	60	60	60
Meter Volume, ft^3	(Vm)	39.570	39.818	39.471	39.620
Meter Temperature, R	(tm)	550	555	555	553
Barometric Pressure, in. Hg	(Pb)	29.21	29.21	29.21	29.21
Meter Orifice Pressure, in. H_2O	(dH)	1.392	1.363	1.332	1.362
Meter Pressure, in. Hg	(Pm)	29.31	29.31	29.31	29.31
Ave Sq Rt Meter Orifice Pressure, in. H_2O	((sqrt. dH)ave	1.179	1.166	1.150	1.165
Meter Orifice Calibraion Coefficient, in. H_2O	(dH@)	1.932	1.932	1.932	1.932
Dry Mol. Wt. of Stack Gas, lb/lb-mole	(Md)	29.47	29.50	29.43	29.47
Dry Gas Meter Cal. Check Value	(Yqa)	0.9866	0.9738	0.9707	0.9770
Meter Correction Factor	(Y)	0.9960	0.9960	0.9960	0.9960
Mean Percent Difference, %	< +/- 5%				**-1.90**

Equipment calibrations will be maintained on file at Weston.

RESPONSE TIME CHECKS

RUN DATA

Number 13

Client:	**Bowater**	Project Number:	**03917.008.014**
Location:	**Catawba, SC**	Operator:	**T. Simpkins**
Source:	**Lime Kiln**	Date:	**28 Jul 2009**
Calibration:	**1**		

Time	O2 %	NOx ppm
Starting time 14:39		
14:39:35	3.2	162
	gas on	
14:39:45	3.2	162
14:39:55	3.2	163
14:40:05	3.2	166
14:40:15	3.3	169
14:40:25	3.3	126
14:40:35	13.1	52
14:40:45	19.4	21
	gas off	
14:40:55	19.7	9
14:41:05	19.7	4
14:41:15	19.8	2
14:41:25	19.8	2
14:41:35	19.8	2
14:41:45	19.5	51
14:41:55	8.5	129
14:42:05	3.9	164
14:42:15	3.6	179
14:42:25	3.5	186
	gas on	
14:42:35	3.5	188
14:42:45	3.5	189
14:42:55	3.5	192
14:43:05	3.5	192
14:43:15	3.9	136
14:43:25	15.8	56
14:43:35	19.5	22
14:43:45	19.7	9
	gas off	
14:43:55	19.8	4
14:44:05	19.8	2

RUN DATA

Number 13

Client:	**Bowater**	Project Number:	**03917.008.014**
Location:	**Catawba, SC**	Operator:	**T. Simpkins**
Source:	**Lime Kiln**	Date:	**28 Jul 2009**
Calibration:	**1**		

Time	O2 %	NOx ppm
14:44:15	19.8	1
14:44:25	19.8	1
14:44:35	19.8	31
14:44:45	11.7	114
14:44:55	4.0	155
14:45:05	3.5	170
14:45:15	3.4	173
14:45:25	3.3	174
14:45:35	3.3	177
14:45:45	3.4	180
14:45:55	3.4	138
14:46:05	14.5	58
14:46:15	19.4	23
14:46:25	19.7	9
	gas off	
14:46:35	19.8	4
14:46:45	19.8	2
14:46:55	19.8	1
14:47:05	19.8	1
14:47:15	19.8	1
14:47:25	19.8	28
14:47:35	12.9	117
14:47:45	4.3	163
14:47:55	3.6	180
	gas on	
14:48:05	3.5	188
14:48:15	3.6	194
14:48:25	3.6	200
14:48:35	3.5	179
14:48:45	8.6	125
14:48:55	2.9	114
14:49:05	0.3	160
14:49:15	0.3	212

RUN DATA

Number 13

Client:	**Bowater**	Project Number:	**03917.008.014**
Location:	**Catawba, SC**	Operator:	**T. Simpkins**
Source:	**Lime Kiln**	Date:	**28 Jul 2009**
Calibration:	**1**		

Time	O2 %	NOx ppm
14:49:25	0.3	235
14:49:35	0.3	244
14:49:45	0.2	247
14:49:55	0.2	249
	gas off	
14:50:05	0.2	249
14:50:15	0.3	249
14:50:25	0.3	239
14:50:35	1.9	211
14:50:45	3.1	197
14:50:55	3.3	193
14:51:05	3.4	192
14:51:15	3.4	190
	gasn	
14:51:25	3.3	189
	gas on	
14:51:35	3.3	191
14:51:45	3.4	194
14:51:55	3.4	196
14:52:05	3.4	204
14:52:15	1.3	225
14:52:25	0.3	239
14:52:35	0.3	246
14:52:45	0.2	248
14:52:55	0.2	249
14:53:05	0.2	250
14:53:15	0.2	250
	gas off	
14:53:25	0.2	250
14:53:35	0.2	250
14:53:45	0.2	250
14:53:55	0.2	250
14:54:05	0.3	243

RUN DATA

Number 13

Client:	**Bowater**	Project Number:	**03917.008.014**
Location:	**Catawba, SC**	Operator:	**T. Simpkins**
Source:	**Lime Kiln**	Date:	**28 Jul 2009**
Calibration:	**1**		

Time	O2 %	NOx ppm
14:54:15	1.8	219
14:54:25	3.2	204
14:54:35	3.4	199
14:54:45	3.5	199
14:54:55	3.5	200
14:55:05	3.4	199
	gas on	
14:55:15	3.4	194
14:55:25	3.3	191
14:55:35	3.4	192
14:55:45	3.5	198
14:55:55	2.6	219
14:56:05	0.5	236
14:56:15	0.2	244
14:56:25	0.2	248
14:56:35	0.2	249
14:56:45	0.2	249
14:56:55	0.2	249
14:57:05	0.2	249
14:57:15	0.6	231
14:57:25	3.1	214
Run Avg	**6.4**	**158**

RUN DATA

Number 13

Client: **Bowater**
Location: **Catawba, SC**
Source: **No. 3 Recovery**
Calibration: **1**

Project Number: **03917.008.014**
Operator: **T. Simpkins**
Date: **29 Jul 2009**

Time	O2 %	CO2 %	CO ppm	NOx ppm
	Starting time 12:05			
12:05	5.7	13.4	141	57
12:05	5.7	13.4	136	57
12:06	5.8	13.3	135	57
12:06	5.8	13.2	149	56
12:06	5.8	13.3	150	57
12:06	5.9	13.2	156	57
12:06	5.8	13.2	174	56
		gas on		
12:06	5.8	13.3	179	56
12:07	5.8	13.4	193	55
12:07	5.9	13.3	200	55
12:07	5.9	13.2	199	55
12:07	5.9	13.2	197	55
12:07	5.4	12.8	249	38
12:07	3.2	3.2	261	15
12:08	12.7	8.3	179	5
12:08	19.3	18.2	104	1
12:08	19.6	18.7	55	0
		gas off		
12:08	19.7	19.1	28	0
12:08	19.8	19.2	15	0
12:08	19.8	19.2	8	0
12:09	19.8	19.1	5	0
12:09	19.8	19.1	4	0
12:09	19.8	19.2	3	0
12:09	19.8	19.1	9	1
12:09	16.6	18.1	49	24
12:09	7.4	14.1	98	43
12:10	6.0	13.4	150	51
12:10	6.0	13.5	206	54
12:10	5.9	13.5	281	55
12:10	5.8	13.5	351	55

RUN DATA

Number 13

Client:	**Bowater**	Project Number:	**03917.008.014**
Location:	**Catawba, SC**	Operator:	**T. Simpkins**
Source:	**No. 3 Recovery**	Date:	**29 Jul 2009**
Calibration:	**1**		

Time	O2 %	CO2 %	CO ppm	NOx ppm
12:10	5.8	13.5	397	56
12:10	5.9	13.4	419	56
12:11	5.9	13.4	401	50
12:11	11.9	15.2	277	24
12:11	19.0	17.9	155	9
12:11	19.7	18.6	80	3
		gas off		
12:11	19.7	19.2	40	0
12:11	19.8	19.3	21	0
12:12	19.8	19.2	12	0
12:12	19.8	19.2	7	0
12:12	19.8	19.2	5	0
12:12	19.8	19.2	3	0
12:12	19.8	19.2	3	0
12:12	19.8	19.2	29	2
12:13	16.1	18.1	158	25
12:13	7.1	14.2	249	43
12:13	6.1	13.6	271	51
		gas on		
12:13	6.0	13.5	259	55
12:13	6.0	13.4	248	56
12:13	6.0	13.4	240	57
12:14	5.9	13.4	205	58
12:14	6.0	13.4	180	58
12:14	6.0	13.4	168	58
12:14	6.9	13.5	130	40
12:14	16.7	17.3	78	16
12:14	19.5	18.2	42	5
12:15	19.7	19.2	22	1
12:15	19.7	19.3	12	0
		gas off		
12:15	19.8	19.3	7	0
12:15	19.8	19.4	4	0

RUN DATA

Number 13

Client:	**Bowater**	Project Number:	**03917.008.014**
Location:	**Catawba, SC**	Operator:	**T. Simpkins**
Source:	**No. 3 Recovery**	Date:	**29 Jul 2009**
Calibration:	**1**		

Time	O2 %	CO2 %	CO ppm	NOx ppm
12:15	19.8	19.3	3	0
12:15	19.8	19.4	3	0
12:16	19.8	19.3	2	0
12:16	19.8	19.4	2	0
12:16	19.3	19.4	24	13
12:16	10.0	15.9	61	38
12:16	6.2	13.9	99	50
12:16	6.0	13.6	130	55
		gas on		
12:17	6.0	13.5	149	56
12:17	6.0	13.5	175	57
12:17	5.9	13.6	183	57
12:17	6.0	13.5	201	57
12:17	6.0	13.5	243	58
12:17	5.9	13.6	270	56
12:18	8.4	14.3	216	33
12:18	17.9	18.2	131	43
12:18	5.0	6.4	72	105
12:18	0.5	0.7	39	179
12:18	0.4	0.5	21	218
12:18	0.4	0.4	11	233
12:19	0.3	0.4	7	238
		gas off		
12:19	0.3	0.3	5	240
12:19	0.3	0.3	4	240
12:19	0.3	0.3	4	240
12:19	0.3	0.4	3	240
12:19	0.3	0.3	3	240
12:20	0.3	0.2	3	240
12:20	0.4	0.3	5	212
12:20	3.5	6.3	29	131
12:20	5.6	12.7	48	90
		gas on		
12:20	6.0	13.1	55	74

RUN DATA

Number 13

Client:	**Bowater**	Project Number:	**03917.008.014**
Location:	**Catawba, SC**	Operator:	**T. Simpkins**
Source:	**No. 3 Recovery**	Date:	**29 Jul 2009**
Calibration:	**1**		

Time	O2 %	CO2 %	CO ppm	NOx ppm
12:20	6.0	13.1	60	67
12:21	6.1	13.1	61	64
12:21	6.1	13.4	64	63
12:21	6.1	13.2	66	62
12:21	6.1	13.2	71	62
12:21	5.7	13.0	65	110
12:21	1.8	3.7	45	176
12:22	0.8	0.6	25	212
12:22	0.3	0.4	13	230
12:22	0.3	0.3	8	237
		gas off		
12:22	0.3	0.2	5	239
12:22	0.3	0.4	4	240
12:22	0.3	0.4	3	240
12:23	0.3	0.3	3	240
12:23	0.3	0.2	3	240
12:23	0.3	0.2	3	240
12:23	0.4	0.3	24	215
12:23	3.3	5.7	96	131
12:23	5.5	12.7	158	86
12:24	5.8	13.2	194	68
12:24	6.0	13.3	210	60
12:24	6.0	13.4	195	58
12:24	6.1	13.4	179	58
12:24	6.1	13.2	178	58
12:24	6.0	13.2	202	58
12:25	6.0	13.3	217	58
12:25	6.0	13.2	219	58
12:25	5.9	13.1	200	98
12:25	2.1	4.9	131	156
12:25	8.7	5.6	71	81
12:25	19.0	18.2	36	31
12:26	19.6	19.1	19	12

RUN DATA

Number 13

Client: **Bowater**
Location: **Catawba, SC**
Source: **No. 3 Recovery**
Calibration: **1**

Project Number: **03917.008.014**
Operator: **T. Simpkins**
Date: **29 Jul 2009**

Time	O2 %	CO2 %	CO ppm	NOx ppm
12:26	19.7	19.2	10	5
		gas on		
12:26	19.7	19.2	6	2
12:26	19.8	19.2	4	0
12:26	19.7	19.3	3	0
12:26	19.8	19.3	2	0
12:27	18.8	19.1	2	64
12:27	3.8	5.4	2	163
12:27	0.5	0.7	3	210
12:27	0.4	0.6	3	229
12:27	0.4	0.3	3	236
12:27	0.4	0.1	3	239
12:28	0.3	0.1	3	240
12:28	0.3	0.0	3	240
12:28	0.3	0.0	3	240
12:28	0.3	0.0	3	240
12:28	0.3	0.0	3	241
12:28	0.3	0.0	3	241
		gas off		
12:29	0.3	0.1	3	241
12:29	0.3	0.2	3	241
12:29	0.3	0.1	3	241
12:29	0.3	0.1	3	240
12:29	0.3	0.0	3	240
12:29	0.3	0.0	3	239
12:30	0.8	0.4	31	185
12:30	4.8	9.4	68	110
12:30	5.8	12.7	86	78
12:30	6.0	13.0	84	67
12:30	6.1	13.1	76	62
		gas on		
12:30	6.1	13.0	72	60
12:31	6.1	12.9	70	59

RUN DATA

Number 13

Client:	**Bowater**	Project Number:	**03917.008.014**
Location:	**Catawba, SC**	Operator:	**T. Simpkins**
Source:	**No. 3 Recovery**	Date:	**29 Jul 2009**
Calibration:	**1**		

Time	O2 %	CO2 %	CO ppm	NOx ppm
12:31	6.1	13.0	66	59
12:31	6.1	12.9	79	58
12:31	6.0	13.0	107	59
12:31	6.1	12.9	121	62
12:31	5.0	12.0	97	125
12:32	1.8	2.4	152	138
12:32	2.4	1.9	407	58
12:32	0.4	0.4	637	21
12:32	0.3	0.1	777	8
12:32	0.3	0.0	848	2
		gas off		
12:32	0.3	0.0	878	1
12:33	0.3	0.0	892	0
12:33	0.3	0.0	898	0
12:33	0.3	0.0	901	0
12:33	0.3	0.0	902	0
12:33	0.3	0.0	903	0
12:33	0.3	0.2	886	2
12:34	1.9	2.4	698	26
12:34	5.4	11.4	484	45
12:34	6.0	12.6	333	52
12:34	6.1	12.7	247	54
12:34	6.1	12.8	197	55
12:34	6.2	12.7	179	57
		gas on		
12:35	6.1	12.8	188	57
12:35	6.1	12.9	207	57
12:35	6.1	12.9	198	56
12:35	6.1	13.1	195	56
12:35	5.9	13.1	197	56
12:35	6.0	13.1	223	53
12:36	4.4	10.5	402	29
12:36	1.7	1.0	599	11

RUN DATA

Number 13

Client:	**Bowater**	Project Number:	**03917.008.014**
Location:	**Catawba, SC**	Operator:	**T. Simpkins**
Source:	**No. 3 Recovery**	Date:	**29 Jul 2009**
Calibration:	**1**		

Time	O2 %	CO2 %	CO ppm	NOx ppm
12:36	0.5	0.3	743	3
12:36	0.3	0.1	831	1
		gas off		
12:36	0.3	0.1	871	0
12:36	0.3	0.0	890	0
12:37	0.3	0.2	898	0
12:37	0.3	0.0	902	0
12:37	0.3	0.0	903	0
12:37	0.3	0.0	904	0
12:37	0.3	0.0	897	0
12:37	1.4	1.3	712	22
12:38	5.4	10.5	495	41
12:38	5.9	12.7	355	49
12:38	5.9	13.0	298	51
12:38	5.9	13.3	271	53
12:38	6.0	13.1	252	54
		gas on		
12:38	5.9	13.1	234	54
12:39	6.0	13.0	241	54
12:39	5.8	13.1	241	54
12:39	5.8	13.2	247	54
12:39	5.9	13.2	231	55
12:39	6.0	13.0	185	55
12:39	6.0	13.0	213	50
12:40	3.6	8.9	411	24
12:40	1.7	0.8	612	9
12:40	0.4	0.5	753	3
12:40	0.3	0.2	836	0
12:40	0.3	0.2	874	0
		gas off		
12:40	0.3	0.2	890	0
12:41	0.3	0.2	898	0
12:41	0.3	0.2	901	0

RUN DATA

Number 13

Client:	**Bowater**	Project Number:	**03917.008.014**
Location:	**Catawba, SC**	Operator:	**T. Simpkins**
Source:	**No. 3 Recovery**	Date:	**29 Jul 2009**
Calibration:	**1**		

Time	O2 %	CO2 %	CO ppm	NOx ppm
12:41	0.3	0.2	903	0
12:41	0.3	0.2	903	0
12:41	0.3	0.4	904	0
12:41	0.3	0.4	861	5
12:42	2.9	4.6	650	30
12:42	5.7	12.1	446	45
12:42	6.0	12.9	305	51
12:42	6.0	13.1	226	53
Run Avg	**6.6**	**9.6**	**229**	**72**

PERMEATION DEVICE CERTIFICATES

CERTIFICATE

The permeation rate of the DYNACAL® PERMEATION DEVICE listed below is certified traceable to N.I.S.T. standards.

Chemical Fill	: Hydrogen Sulfide
Device Type	: Wafer
Length /Geometry	: 40T3
Part Number	: 147-543-0110-C50-S
Method of Certification	: Gravimetric
Serial Number	: T-32759
Rate	: 702 ng/min +/- 0.38 % at 50 degrees C
Notes:	
Date	: March 20, 2009
Customer	: Weston Solutions Inc
Order No.	: M040091

By

VICI Metronics, Inc.
26295 Twelve Trees Lane NW
Poulsbo, WA 98370
(360) 697-9199 Fax: (360) 697-6682

INDIVIDUAL DEVICE CERTIFICATION

The gravimetric method measures the weight loss per unit of time at the certification temperature. Traceability is thus established by the use of temperature and weight standards traceable to N.I.S.T. standards.

Individual certification is accomplished by: (1) maintaining the device in a constant temperature chamber with a purge flow of dry nitrogen, and (2) weighing periodically on a semi-microanalytical balance, accurate to the nearest 0.01 mg, until a steady weight loss per unit time has been achieved. Temperature control and accuracy are better than ±0.05°C, referenced against temperature standards traceable to the National Institute of Standards and Technology. The semi-microanalytical balances are routinely serviced and calibrated by an independent service organization using N.I.S.T. traceable weight standards. Gravimetric permeation rate determinations are continued until the standard error of the permeation rate meets the required accuracy at the 95% confidence level.

CERTIFICATE

The permeation rate of the DYNACAL® PERMEATION DEVICE listed below is certified traceable to N.I.S.T. standards.

Chemical Fill	: Dimethyl Sulfide
Device Type	: Standard #19
Length /Geometry	: 3.3 cm
Part Number	: 117-033-6200-T33-C50-S
Method of Certification	: Gravimetric
Serial Number	: 19-32781
Rate	: 764 ng/min +/- 0.33 % at 50 degrees C
Notes:	
Date	: March 20, 2009
Customer	: Weston Solutions Inc
Order No.	: M040091

By

VICI

VICI Metronics, Inc.
26295 Twelve Trees Lane NW
Poulsbo, WA 98370
(360) 697-9199 Fax: (360) 697-6682

INDIVIDUAL DEVICE CERTIFICATION

The gravimetric method measures the weight loss per unit of time at the certification temperature. Traceability is thus established by the use of temperature and weight standards traceable to N.I.S.T. standards.

Individual certification is accomplished by: (1) maintaining the device in a constant temperature chamber with a purge flow of dry nitrogen, and (2) weighing periodically on a semi-microanalytical balance, accurate to the nearest 0.01 mg, until a steady weight loss per unit time has been achieved. Temperature control and accuracy are better than ±0.05°C, referenced against temperature standards traceable to the National Institute of Standards and Technology. The semi-microanalytical balances are routinely serviced and calibrated by an independent service organization using N.I.S.T. traceable weight standards. Gravimetric permeation rate determinations are continued until the standard error of the permeation rate meets the required accuracy at the 95% confidence level.

CERTIFICATE

The permeation rate of the DYNACAL® PERMEATION DEVICE listed below is certified traceable to N.I.S.T. standards.

Chemical Fill	: Methyl Mercaptan
Device Type	: Standard
Length /Geometry	: 4.1 cm
Part Number	: 117-041-6000-C50-S
Method of Certification	: Gravimetric
Serial Number	: 33-32773
Rate	: 771 ng/min +/- 0.46 % at 50 degrees C
Notes:	
Date	: March 20, 2009
Customer	: Weston Solutions Inc
Order No.	: M040091

By

VICI

VICI Metronics, Inc.
26295 Twelve Trees Lane NW
Poulsbo, WA 98370
(360) 697-9199 Fax: (360) 697-6682

INDIVIDUAL DEVICE CERTIFICATION

The gravimetric method measures the weight loss per unit of time at the certification temperature. Traceability is thus established by the use of temperature and weight standards traceable to N.I.S.T. standards.

Individual certification is accomplished by: (1) maintaining the device in a constant temperature chamber with a purge flow of dry nitrogen, and (2) weighing periodically on a semi-microanalytical balance, accurate to the nearest 0.01 mg, until a steady weight loss per unit time has been achieved. Temperature control and accuracy are better than ±0.05°C, referenced against temperature standards traceable to the National Institute of Standards and Technology. The semi-microanalytical balances are routinely serviced and calibrated by an independent service organization using N.I.S.T. traceable weight standards. Gravimetric permeation rate determinations are continued until the standard error of the permeation rate meets the required accuracy at the 95% confidence level.

CERTIFICATE

The permeation rate of the DYNACAL® PERMEATION DEVICE listed below is certified traceable to N.I.S.T. standards.

Chemical Fill	: Dimethyl Disulfide
Device Type	: High Emission
Length /Geometry	: 20.0 cm
Part Number	: 107-200-6301-C50-S
Method of Certification	: Gravimetric
Serial Number	: 89-32782
Rate	: 861 ng/min +/- 1.1 % at 50 degrees C
Notes:	
Date	: March 20, 2009
Customer	: Weston Solutions Inc
Order No.	: M040091

By

VICI

VICI Metronics, Inc.
26295 Twelve Trees Lane NW
Poulsbo, WA 98370
(360) 697-9199 Fax: (360) 697-6682

INDIVIDUAL DEVICE CERTIFICATION

The gravimetric method measures the weight loss per unit of time at the certification temperature. Traceability is thus established by the use of temperature and weight standards traceable to N.I.S.T. standards.

Individual certification is accomplished by: (1) maintaining the device in a constant temperature chamber with a purge flow of dry nitrogen, and (2) weighing periodically on a semi-microanalytical balance, accurate to the nearest 0.01 mg, until a steady weight loss per unit time has been achieved. Temperature control and accuracy are better than ±0.05°C, referenced against temperature standards traceable to the National Institute of Standards and Technology. The semi-microanalytical balances are routinely serviced and calibrated by an independent service organization using N.I.S.T. traceable weight standards. Gravimetric permeation rate determinations are continued until the standard error of the permeation rate meets the required accuracy at the 95% confidence level.

APPENDIX I
PROCESS OPERATING/PRODUCTION DATA

Lime Kiln

Start Time	07-28-09 03:00 PM							
End Time	07-28-09 06:30 PM							
							Instantaneous	Calculated
	East Pre-Coat Filter		West Pre-Coat Filter		Natural Gas	Oil	Opacity	Lime Production
	gpm mud	solids %	gpm mud	solids %	KCFH	Gallons	%	tpd CaCO
	27fc295a.pv	27dc296a.pv	27fc295b.pv	27dc296b.pv	27fc576.pv	27fc584.pv	27ai529l.pv	
28-Jul-09 15:00:00	135	1	130	1	99	0	1	16
28-Jul-09 15:06:00	135	1	130	1	99	0	1	16
28-Jul-09 15:12:00	135	1	130	1	99	0	1	17
28-Jul-09 15:18:00	135	1	130	1	99	0	1	17
28-Jul-09 15:24:00	135	1	131	1	99	0	1	17
28-Jul-09 15:30:00	136	1	131	1	99	0	1	17
28-Jul-09 15:36:00	135	1	130	1	99	0	1	16
28-Jul-09 15:42:00	135	1	130	1	99	0	1	16
28-Jul-09 15:48:00	135	1	130	1	99	0	1	16
28-Jul-09 15:54:00	135	1	130	1	99	0	1	16
28-Jul-09 16:00:00	135	1	130	1	99	0	1	17
28-Jul-09 16:06:00	135	1	129	1	99	0	1	16
28-Jul-09 16:12:00	133	1	130	1	99	0	2	16
28-Jul-09 16:18:00	134	1	130	1	99	0	1	16
28-Jul-09 16:24:00	134	1	131	1	99	0	1	16
28-Jul-09 16:30:00	135	1	130	1	99	0	1	16
28-Jul-09 16:36:00	135	1	130	1	99	0	1	16
28-Jul-09 16:42:00	136	1	130	1	99	0	1	17
28-Jul-09 16:48:00	135	1	130	1	99	0	1	16
28-Jul-09 16:54:00	135	1	130	1	99	0	1	17
28-Jul-09 17:00:00	135	1	130	1	99	0	1	16
28-Jul-09 17:06:00	135	1	130	1	99	0	1	17
28-Jul-09 17:12:00	135	1	131	1	99	0	1	17
28-Jul-09 17:18:00	135	1	131	1	99	0	1	17
28-Jul-09 17:24:00	136	1	131	1	99	0	1	17
28-Jul-09 17:30:00	134	1	130	1	99	0	1	16
28-Jul-09 17:36:00	135	1	130	1	99	0	1	16
28-Jul-09 17:42:00	135	1	131	1	99	0	1	17
28-Jul-09 17:48:00	135	1	130	1	99	0	1	16
28-Jul-09 17:54:00	135	1	130	1	99	0	1	16
28-Jul-09 18:00:00	134	1	130	1	99	0	1	16
28-Jul-09 18:06:00	136	1	131	1	99	0	1	17
28-Jul-09 18:12:00	135	1	131	1	99	0	1	17
28-Jul-09 18:18:00	136	1	131	1	99	0	1	17
28-Jul-09 18:24:00	135	1	129	1	99	0	1	16
								#VALUE!
								#VALUE!
								#VALUE!
								#VALUE!
								#VALUE!
								#VALUE!
								#VALUE!
								#VALUE!
								0
								0
								0
								0
								0
								0
								0
								#VALUE!

0

Bowater, Incorporated
Smelt Dissolving Tank Vent
Process Data,

Start Time 7/29/2009 9:00
End Time 7/29/2009 19:30

	Smelt Dissolving Tank Scrubber				No. 2 Recovery Boiler			No. 3 Recovery Boiler			
	Scrubber Pump Discharge Pressure (PSIG) rpis89.pv	Weak Wash Spray Flow (gpm) rfis98.pv	Weak Wash Flow (gpm) rfis99.pv	Differential Pressure (inches of water) rpis98.pv	Liquor Firing Rate (gpm) R2LIQ.PV	Percent Solids (%) rdr204a.pv	Pounds per Hour BLS	Liquor Firing Rate (gpm) R3LIQ.PV	Percent Solids (%) rdi3748.pv	Pounds per Hour BLS	Total Tons per Hour BLS
07/29/09 09:00 AM	48.59	97.66	108.23	4.36	186.5	67.7	81399	358.2	67.6	156109	118.8
07/29/09 09:15 AM	48.60	97.64	108.27	4.43	184.0	67.8	80536	360.5	67.6	157201	118.9
07/29/09 09:30 AM	48.66	97.63	108.20	4.37	189.1	67.5	82283	358.2	67.6	156226	119.3
07/29/09 09:45 AM	48.68	97.61	108.09	4.48	192.6	67.4	83691	359.2	67.6	156688	120.2
07/29/09 10:00 AM	48.67	97.59	108.61	4.53	191.8	67.3	83285	358.0	67.6	156159	119.7
07/29/09 10:15 AM	48.65	97.58	108.25	4.41	191.3	67.3	83060	357.2	67.6	155836	119.4
07/29/09 10:30 AM	48.59	97.56	107.56	4.40	191.7	67.2	83101	357.1	67.6	155837	119.5
07/29/09 10:45 AM	48.64	97.55	108.30	4.52	191.8	67.3	83269	358.6	67.6	156462	119.9
07/29/09 11:00 AM	48.76	97.53	108.26	4.54	191.3	67.3	83074	358.2	67.6	156221	119.6
07/29/09 11:15 AM	48.68	97.69	108.38	4.47	191.8	67.3	83254	358.7	67.6	156334	119.8
07/29/09 11:30 AM	48.67	97.69	108.58	4.47	191.6	67.3	83151	358.8	67.5	156326	119.7
07/29/09 11:45 AM	48.58	97.62	108.55	4.41	191.3	67.3	83040	358.1	67.5	155942	119.5
07/29/09 12:00 PM	48.61	97.55	108.11	4.44	190.9	67.3	82916	358.1	67.5	155916	119.4
07/29/09 12:15 PM	48.57	97.48	108.28	4.32	189.4	67.3	82275	357.5	67.5	155592	118.9
07/29/09 12:30 PM	48.55	97.41	108.02	4.30	190.7	67.2	82679	359.3	67.4	156318	119.5
07/29/09 12:45 PM	48.50	97.34	108.10	4.37	192.2	67.2	83269	358.5	67.4	155890	119.6
07/29/09 01:00 PM	48.53	97.04	108.62	4.41	191.9	67.2	83154	358.2	67.4	155741	119.4
07/29/09 01:15 PM	48.60	96.77	108.29	4.45	191.6	67.2	83021	358.9	67.4	156011	119.5
07/29/09 01:30 PM	48.55	96.77	108.24	4.38	191.9	67.2	83174	355.2	67.3	154326	118.8
07/29/09 01:45 PM	48.55	96.77	108.52	4.42	191.9	67.2	83190	354.0	67.3	153734	118.5
07/29/09 02:00 PM	48.59	96.77	108.17	4.38	191.8	67.2	83155	352.5	67.3	153073	118.1
07/29/09 02:15 PM	48.55	96.77	108.44	4.28	191.2	67.2	82889	352.2	67.3	153007	117.9
07/29/09 02:30 PM	48.57	96.77	108.72	4.35	191.6	67.2	83066	351.6	67.3	152685	117.9
07/29/09 02:45 PM	48.62	96.77	108.37	4.47	191.8	67.2	83195	352.0	67.3	152854	118.0
07/29/09 03:00 PM	48.62	96.77	108.26	4.47	191.2	67.3	82969	351.7	67.3	152762	117.9
07/29/09 03:15 PM	48.64	96.77	109.19	4.43	191.3	67.4	83137	352.1	67.3	152906	118.0
07/29/09 03:30 PM	48.61	96.77	108.76	4.42	191.1	67.3	83026	352.9	67.3	153198	118.1
07/29/09 03:45 PM	48.61	96.77	108.62	4.38	191.1	67.3	83035	353.3	67.3	153457	118.2
07/29/09 04:00 PM	48.56	96.77	108.55	4.38	191.6	67.3	83248	352.2	67.3	152923	118.1
07/29/09 04:15 PM	48.59	96.77	108.64	4.42	191.1	67.4	83034	352.4	67.3	152934	118.0
07/29/09 04:30 PM	48.64	96.77	108.43	4.38	193.3	67.4	84030	351.8	67.2	152507	118.3
07/29/09 04:45 PM	48.60	96.77	108.51	4.23	193.2	67.4	83990	351.6	67.2	152401	118.2
07/29/09 05:00 PM	48.67	96.90	108.96	4.22	193.5	67.4	84144	351.7	67.2	152457	118.3
07/29/09 05:15 PM	48.67	97.06	108.49	4.27	193.2	67.4	84041	352.4	67.2	152810	118.4
07/29/09 05:30 PM	48.66	97.10	108.81	4.30	193.0	67.5	83975	351.9	67.2	152583	118.3
07/29/09 05:45 PM	48.73	97.14	108.59	4.46	193.0	67.5	83994	352.2	67.2	152762	118.4
07/29/09 06:00 PM	48.70	97.18	108.64	4.47	192.8	67.5	83917	351.8	67.2	152420	118.2
07/29/09 06:15 PM	48.67	97.22	108.62	4.26	192.2	67.5	83663	352.8	67.1	152744	118.2
07/29/09 06:30 PM	48.64	97.26	108.54	4.35	192.5	67.5	83798	352.1	67.1	152405	118.1
07/29/09 06:45 PM	48.71	97.30	108.88	4.35	192.9	67.5	83967	353.5	67.1	152915	118.4
07/29/09 07:00 PM	48.63	97.34	108.69	4.36	193.0	67.5	83995	354.4	67.1	153300	118.6
07/29/09 07:15 PM	48.60	97.39	108.12	4.36	192.8	67.5	83919	356.0	67.1	154044	119.0

Run 1 119.5

Run 2 118.0

Run 3 118.3

03417.008.014

No. 1 Swing Boiler

7/30/09 8:30 AM
7/30/09 12:30 PM

Date Time	RB1 Steam 25CF115.pv mlbh	RB1 Gas 25CF126.pv cfh	RB1 Oil 25FY127Z.pv gpm
7/30/09 8:30 AM	173.01	0.00	33.69
7/30/09 8:35 AM	163.66	0.00	33.71
7/30/09 8:40 AM	163.23	0.00	33.72
7/30/09 8:45 AM	162.75	0.00	33.70
7/30/09 8:50 AM	157.63	0.00	33.57
7/30/09 8:55 AM	161.69	0.00	33.67
7/30/09 9:00 AM	163.80	0.00	33.84
7/30/09 9:05 AM	168.76	0.00	33.89
7/30/09 9:10 AM	168.03	0.00	33.81
7/30/09 9:15 AM	170.13	0.00	33.79
7/30/09 9:20 AM	176.81	0.00	34.47
7/30/09 9:25 AM	178.85	0.00	34.63
7/30/09 9:30 AM	175.34	0.00	34.95
7/30/09 9:35 AM	166.01	0.00	32.25
7/30/09 9:40 AM	177.34	0.00	34.90
7/30/09 9:45 AM	168.57	0.00	37.02
7/30/09 9:50 AM	173.78	0.00	37.14
7/30/09 9:55 AM	182.96	0.00	37.47
7/30/09 10:00 AM	181.13	0.00	36.81
7/30/09 10:05 AM	171.55	0.00	36.63
7/30/09 10:10 AM	163.49	0.00	36.69
7/30/09 10:15 AM	155.28	0.00	35.99
7/30/09 10:20 AM	157.91	0.00	35.60
7/30/09 10:25 AM	168.43	0.00	35.65
7/30/09 10:30 AM	169.40	0.00	35.72
7/30/09 10:35 AM	176.98	0.00	35.94
7/30/09 10:40 AM	179.49	0.00	35.92
7/30/09 10:45 AM	166.55	0.00	36.15
7/30/09 10:50 AM	162.40	0.00	36.03
7/30/09 10:55 AM	166.80	0.00	35.94
7/30/09 11:00 AM	168.36	0.00	35.93
7/30/09 11:05 AM	170.35	0.00	36.09
7/30/09 11:10 AM	170.37	0.00	36.16
7/30/09 11:15 AM	164.14	0.00	35.75
7/30/09 11:20 AM	164.21	0.00	35.78
7/30/09 11:25 AM	160.54	0.00	35.39
7/30/09 11:30 AM	156.32	0.00	35.30
7/30/09 11:35 AM	163.69	0.00	35.40
7/30/09 11:40 AM	164.97	0.00	35.71
7/30/09 11:45 AM	168.05	0.00	35.70
7/30/09 11:50 AM	164.81	0.00	35.51
7/30/09 11:55 AM	167.12	0.00	35.55

03917.008.014

No. 3 RF

Start Time 7/29/09 12:50 PM
End Time 7/29/09 5:30 PM

	Steam Load MPPH 51fi317a.pv	Opacity % 51ai321a.p	Black Liquc GPM 51fi308.pv	Liquor Solids % 51di307a.pv	# BLS/Hr	MMlbs BLS	Equv. Pulp Prod ADTP/hr
7/29/09 12:50 PM	543.09	7.27	357.75	67.40	155558.44	3.73	48.37
7/29/09 12:56 PM	544.76	6.95	357.60	67.40	155478.80	3.73	48.35
7/29/09 1:02 PM	531.83	6.93	357.33	67.39	155346.56	3.73	48.30
7/29/09 1:08 PM	527.83	6.81	359.09	67.38	156099.23	3.75	48.54
7/29/09 1:14 PM	527.50	7.20	359.92	67.37	156438.10	3.75	48.64
7/29/09 1:20 PM	528.23	7.15	359.28	67.40	156229.59	3.75	48.58
7/29/09 1:26 PM	547.37	7.37	356.74	67.38	155060.91	3.72	48.22
7/29/09 1:32 PM	543.84	7.85	355.53	67.33	154430.94	3.71	48.02
7/29/09 1:38 PM	526.26	7.81	354.65	67.34	154070.76	3.70	47.91
7/29/09 1:44 PM	523.25	7.98	354.65	67.33	154054.99	3.70	47.90
7/29/09 1:50 PM	521.84	7.92	354.04	67.30	153718.41	3.69	47.80
7/29/09 1:56 PM	525.38	7.80	353.02	67.30	153277.13	3.68	47.66
7/29/09 2:02 PM	542.75	7.14	352.58	67.33	153135.84	3.68	47.62
7/29/09 2:08 PM	551.91	7.52	352.31	67.31	152988.12	3.67	47.57
7/29/09 2:14 PM	551.94	8.31	352.91	67.34	153314.46	3.68	47.67
7/29/09 2:20 PM	554.36	9.10	351.78	67.34	152810.97	3.67	47.52
7/29/09 2:26 PM	546.13	9.11	352.10	67.33	152932.76	3.67	47.55
7/29/09 2:32 PM	539.83	8.95	351.15	67.31	152470.81	3.66	47.41
7/29/09 2:38 PM	527.39	8.47	351.73	67.30	152714.98	3.67	47.49
7/29/09 2:44 PM	532.42	7.80	352.87	67.31	153223.17	3.68	47.64
7/29/09 2:50 PM	521.96	7.34	351.83	67.31	152784.76	3.67	47.51
7/29/09 2:56 PM	520.49	7.47	351.06	67.32	152468.53	3.66	47.41
7/29/09 3:02 PM	522.12	7.36	351.32	67.34	152613.90	3.66	47.45
7/29/09 3:08 PM	520.64	7.37	352.14	67.33	152950.17	3.67	47.56
7/29/09 3:14 PM	520.91	7.15	352.39	67.32	153041.22	3.67	47.59
7/29/09 3:20 PM	521.64	6.92	352.26	67.31	152969.73	3.67	47.57
7/29/09 3:26 PM	528.37	7.20	351.62	67.30	152660.86	3.66	47.47
7/29/09 3:32 PM	507.34	6.53	352.04	67.29	152822.38	3.67	47.52
7/29/09 3:38 PM	505.19	6.75	353.75	67.31	153606.79	3.69	47.76
7/29/09 3:44 PM	511.75	6.25	354.45	67.32	153943.55	3.69	47.87
7/29/09 3:50 PM	510.93	6.64	352.88	67.32	153260.76	3.68	47.66
7/29/09 3:56 PM	528.63	6.53	352.58	67.31	153101.44	3.67	47.61
7/29/09 4:02 PM	495.87	6.02	351.87	67.30	152771.12	3.67	47.50
7/29/09 4:08 PM	520.89	6.50	352.31	67.30	152963.55	3.67	47.56
7/29/09 4:14 PM	517.57	6.58	353.61	67.30	153530.00	3.68	47.74
7/29/09 4:20 PM	533.32	6.71	351.83	67.27	152684.05	3.66	47.48
7/29/09 4:26 PM	539.23	7.74	351.88	67.25	152668.80	3.66	47.47
7/29/09 4:32 PM	535.36	9.21	352.83	67.22	152992.30	3.67	47.57
7/29/09 4:38 PM	528.15	8.81	350.69	67.18	151996.21	3.65	47.26
7/29/09 4:44 PM	529.78	8.72	350.43	67.19	151889.91	3.65	47.23
7/29/09 4:50 PM	529.45	7.98	351.77	67.19	152481.14	3.66	47.41
7/29/09 4:56 PM	537.89	7.29	352.75	67.20	152911.76	3.67	47.55
7/29/09 5:02 PM	528.53	7.29	352.25	67.20			
7/29/09 5:08 PM	528.55	7.38	350.89	67.20			
7/29/09 5:14 PM	536.62	7.07	351.53	67.21			
7/29/09 5:20 PM	530.38	6.78	352.79	67.21			
AVERAGE	529.1764988	7.488372	353.4595	67.31171	153487.331	3.683696	47.72616

03917.008.014

Start Time 7/29/09 12:50 PM
End Time 7/29/09 5:30 PM

	W-I		W-M		W-O		E-I		E-M		E-O	
	51ev233.pv	51ea233.p	51ev234.p	51ea234.p	51ev235.p	51ea235.p	51ev230.p	51ea230.p	51ev231.p	51ea231.p	51ev232.p	51ea232.pv
	Kv	Ma	Kv	Ma	Kv	Ma	Kv	Ma	Kv	Ma	Kv	Ma
7/29/09 12:50 PM	37.73	468.86	40.97	1273.22	37.13	597.75	47.94	381.55	39.67	1086.00	38.97	1090.15
7/29/09 1:05 PM	37.88	423.96	40.94	1217.06	37.23	595.77	48.78	333.56	39.80	1086.07	38.96	1089.12
7/29/09 1:20 PM	37.73	359.45	40.33	1112.80	37.60	591.00	48.70	301.22	39.90	1085.42	38.97	1089.62
7/29/09 1:35 PM	38.22	371.57	40.26	1115.86	37.57	588.88	48.88	318.86	39.47	1085.40	38.56	1090.11
7/29/09 1:50 PM	36.61	342.67	40.00	1163.90	37.07	597.87	48.37	297.08	39.24	1084.93	38.24	1089.20
7/29/09 2:05 PM	36.67	392.31	40.18	1174.66	37.33	593.82	47.26	274.84	39.70	1084.31	38.07	1089.20
7/29/09 2:20 PM	37.26	403.78	40.50	1191.68	37.47	595.12	49.39	355.36	39.44	1084.13	38.20	1089.47
7/29/09 2:35 PM	39.25	517.21	41.03	1323.97	37.13	598.93	49.74	366.32	39.23	1083.42	38.13	1088.55
7/29/09 2:50 PM	38.52	492.19	41.23	1325.34	37.13	597.87	49.00	368.34	39.44	1084.26	38.70	1090.38
7/29/09 3:05 PM	39.08	453.82	40.81	1258.92	37.27	597.68	49.83	348.34	39.90	1085.65	39.00	1089.20
7/29/09 3:20 PM	38.19	402.39	41.06	1296.39	37.40	613.42	49.50	319.34	39.30	1082.21	38.44	1088.35
7/29/09 3:35 PM	38.31	430.56	41.53	1425.19	37.07	616.34	49.63	355.22	39.00	1082.05	38.00	1086.27
7/29/09 3:50 PM	38.53	478.75	41.37	1404.64	37.07	607.47	48.96	323.11	39.07	1084.80	38.13	1089.12
7/29/09 4:05 PM	38.43	508.79	41.17	1307.01	37.36	595.97	47.08	381.52	39.53	1084.73	38.13	1089.73
7/29/09 4:20 PM	36.91	437.83	40.60	1118.21	38.00	579.67	48.02	405.82	40.10	1081.55	38.90	1089.53
7/29/09 4:35 PM	37.17	363.86	40.52	1170.41	37.87	583.52	48.92	384.03	40.00	1085.18	39.00	1089.09
7/29/09 4:50 PM	36.86	393.92	40.80	1277.01	37.44	592.53	47.66	365.49	39.70	1083.67	38.87	1089.53
7/29/09 5:05 PM	37.84	440.84	41.50	1382.93	37.27	599.08	49.70	366.49	39.70	1085.13	38.93	1089.73

03917.008.014

No. 3 CP

END
OF
DOCUMENT